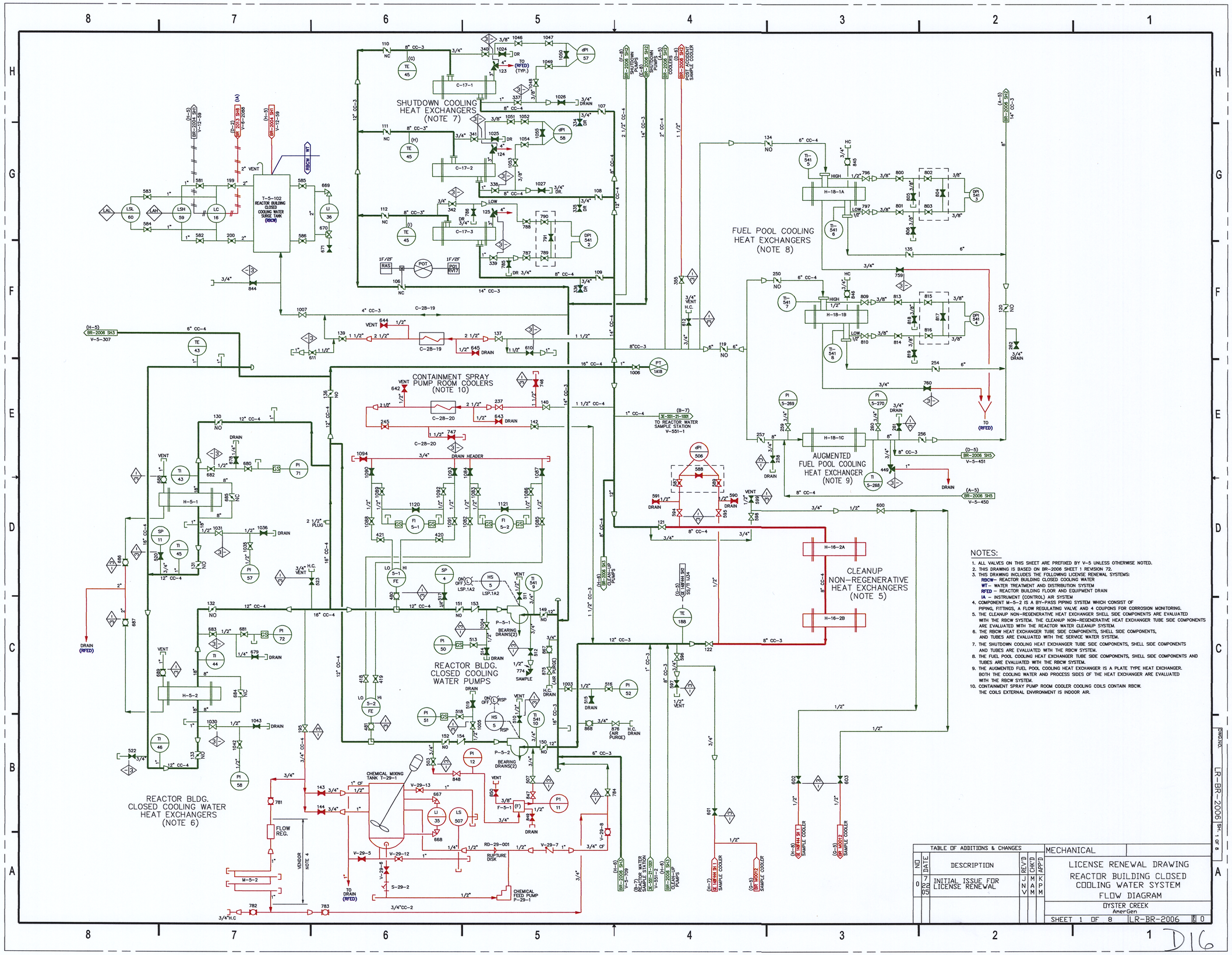

NOTES:

1. ALL VALVES ON THIS SHEET ARE PREFIXED BY V-5 UNLESS OTHERWISE NOTED.
2. THIS DRAWING IS BASED ON BR-2006 SHEET 1 REVISION 72.
3. THIS DRAWING INCLUDES THE FOLLOWING LICENSE RENEWAL SYSTEMS:
   RBCW– REACTOR BUILDING CLOSED COOLING WATER
   WT– WATER TREATMENT AND DISTRIBUTION SYSTEM
   RFED – REACTOR BUILDING FLOOR AND EQUIPMENT DRAIN
   IA – INSTRUMENT (CONTROL) AIR SYSTEM
4. COMPONENT M–5–2 IS A BY–PASS PIPING SYSTEM WHICH CONSIST OF PIPING, FITTINGS, A FLOW REGULATING VALVE AND 4 COUPONS FOR CORROSION MONITORING.
5. THE CLEANUP NON–REGENERATIVE HEAT EXCHANGER SHELL SIDE COMPONENTS ARE EVALUATED WITH THE RBCW SYSTEM. THE CLEANUP NON–REGENERATIVE HEAT EXCHANGER TUBE SIDE COMPONENTS ARE EVALUATED WITH THE REACTOR WATER CLEANUP SYSTEM.
6. THE RBCW HEAT EXCHANGER TUBE SIDE COMPONENTS, SHELL SIDE COMPONENTS, AND TUBES ARE EVALUATED WITH THE SERVICE WATER SYSTEM.
7. THE SHUTDOWN COOLING HEAT EXCHANGER TUBE SIDE COMPONENTS, SHELL SIDE COMPONENTS AND TUBES ARE EVALUATED WITH THE RBCW SYSTEM.
8. THE FUEL POOL COOLING HEAT EXCHANGER TUBE SIDE COMPONENTS, SHELL SIDE COMPONENTS AND TUBES ARE EVALUATED WITH THE RBCW SYSTEM.
9. THE AUGMENTED FUEL POOL COOLING HEAT EXCHANGER IS A PLATE TYPE HEAT EXCHANGER. BOTH THE COOLING WATER AND PROCESS SIDES OF THE HEAT EXCHANGER ARE EVALUATED WITH THE RBCW SYSTEM.
10. CONTAINMENT SPRAY PUMP ROOM COOLER COOLING COILS CONTAIN RBCW. THE COILS EXTERNAL ENVIRONMENT IS INDOOR AIR.

TABLE OF ADDITIONS & CHANGES

NO	DATE	DESCRIPTION	REV'D	CHK'D	APP'D
0	7 02 05	INITIAL ISSUE FOR LICENSE RENEWAL	JNV	MAM	KPM

MECHANICAL

LICENSE RENEWAL DRAWING
REACTOR BUILDING CLOSED COOLING WATER SYSTEM
FLOW DIAGRAM

OYSTER CREEK
AmerGen

SHEET 1 OF 8 | LR-BR-2006 | REV 0

DWG NO. LR-BR-2006 SH. 1 OF 8

D16