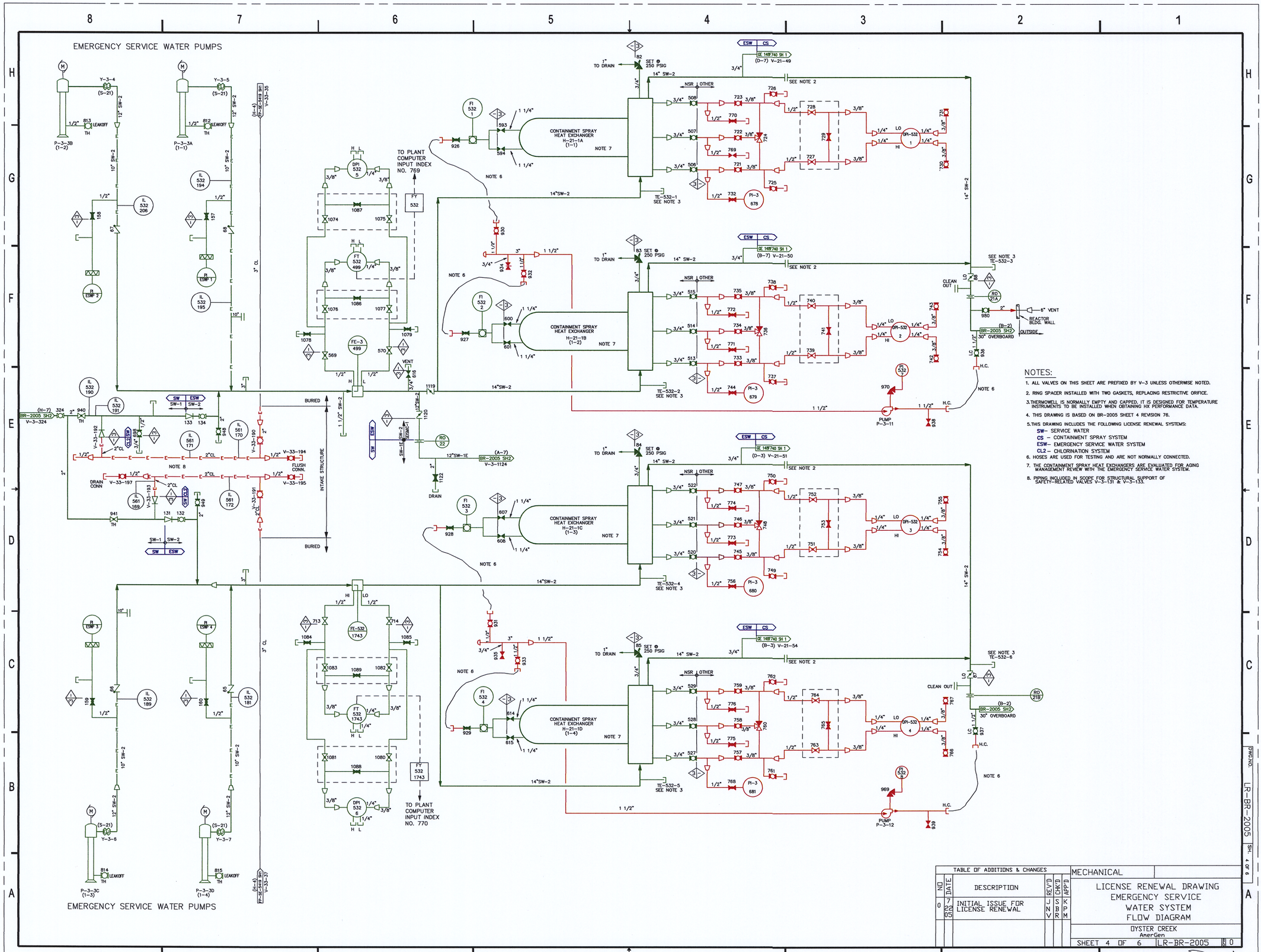


NOTES:

1. ALL VALVES ON THIS SHEET ARE PREFIXED BY V-3 UNLESS OTHERWISE NOTED.
2. RING SPACER INSTALLED WITH TWO GASKETS, REPLACING RESTRICTIVE ORIFICE.
3. THERMOWELL IS NORMALLY EMPTY AND CAPPED. IT IS DESIGNED FOR TEMPERATURE INSTRUMENTS TO BE INSTALLED WHEN OBTAINING HX PERFORMANCE DATA.
4. THIS DRAWING IS BASED ON BR-2005 SHEET 4 REVISION 76.
5. THIS DRAWING INCLUDES THE FOLLOWING LICENSE RENEWAL SYSTEMS:
   - SW– SERVICE WATER
   - CS – CONTAINMENT SPRAY SYSTEM
   - ESW– EMERGENCY SERVICE WATER SYSTEM
   - CL2 – CHLORINATION SYSTEM
6. HOSES ARE USED FOR TESTING AND ARE NOT NORMALLY CONNECTED.
7. THE CONTAINMENT SPRAY HEAT EXCHANGERS ARE EVALUATED FOR AGING MANAGEMENT REVIEW WITH THE EMERGENCY SERVICE WATER SYSTEM.
8. PIPING INCLUDED IN SCOPE FOR STRUCTURAL SUPPORT OF SAFETY-RELATED VALVES V-3-131 & V-3-133.

TABLE OF ADDITIONS & CHANGES

| NO | DATE | DESCRIPTION | REV'D | CHK'D | APP'D |
|---|---|---|---|---|---|
| 0 | 7 22 05 | INITIAL ISSUE FOR LICENSE RENEWAL | JNV | SBR | KPM |

MECHANICAL

LICENSE RENEWAL DRAWING
EMERGENCY SERVICE
WATER SYSTEM
FLOW DIAGRAM

OYSTER CREEK
AmerGen

SHEET 4 OF 6 LR-BR-2005 REV 0

DWG.NO. LR-BR-2005 SH. 4 OF 6

D14