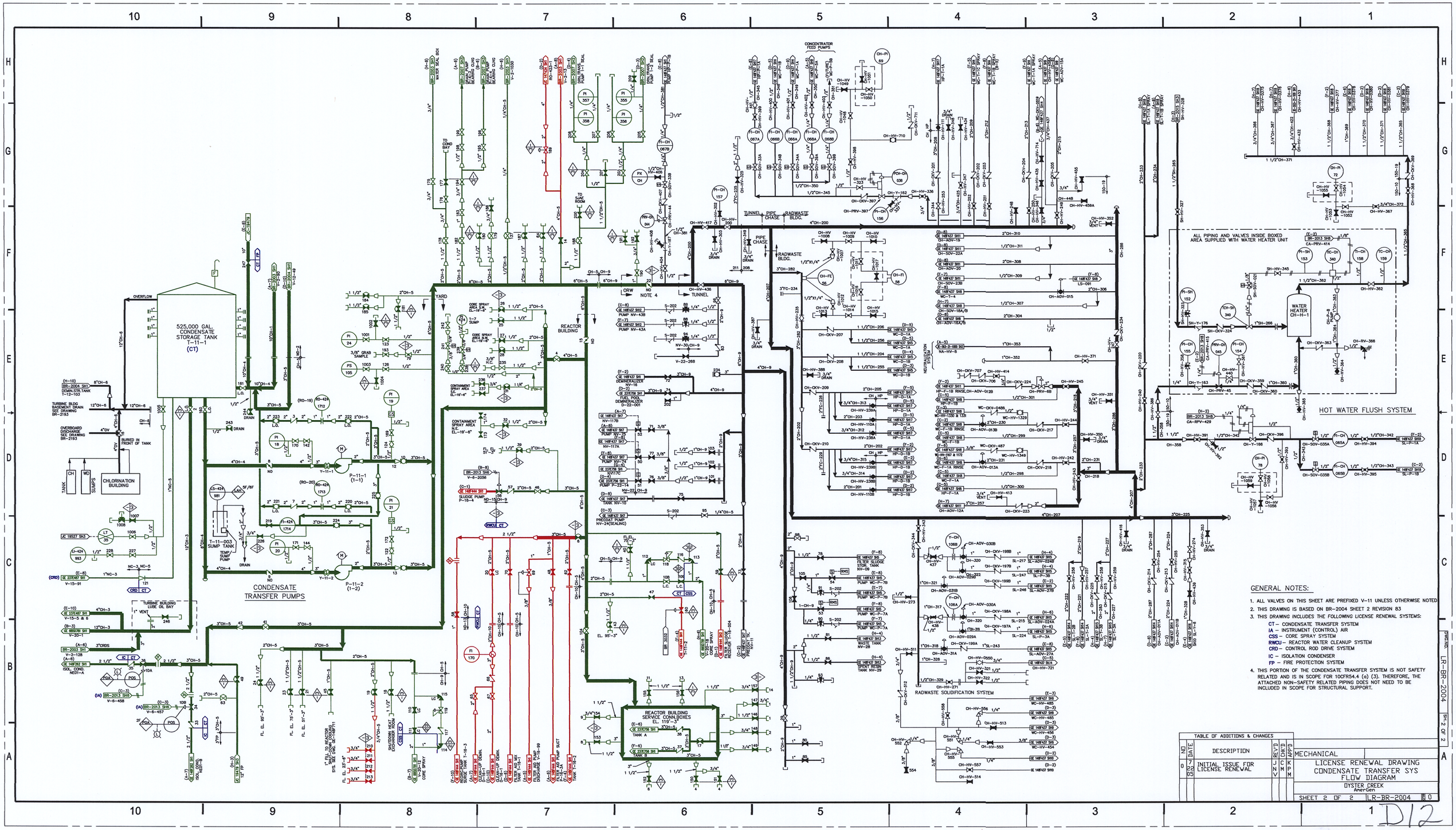

GENERAL NOTES:

1. ALL VALVES ON THIS SHEET ARE PREFIXED V-11 UNLESS OTHERWISE NOTED
2. THIS DRAWING IS BASED ON BR-2004 SHEET 2 REVISION 83
3. THIS DRAWING INCLUDES THE FOLLOWING LICENSE RENEWAL SYSTEMS:
   - CT – CONDENSATE TRANSFER SYSTEM
   - IA – INSTRUMENT (CONTROL) AIR
   - CSS – CORE SPRAY SYSTEM
   - RWCU – REACTOR WATER CLEANUP SYSTEM
   - CRD – CONTROL ROD DRIVE SYSTEM
   - IC – ISOLATION CONDENSER
   - FP – FIRE PROTECTION SYSTEM
4. THIS PORTION OF THE CONDENSATE TRANSFER SYSTEM IS NOT SAFETY RELATED AND IS IN SCOPE FOR 10CFR54.4 (a) (3). THEREFORE, THE ATTACHED NON-SAFETY RELATED PIPING DOES NOT NEED TO BE INCLUDED IN SCOPE FOR STRUCTURAL SUPPORT.

TABLE OF ADDITIONS & CHANGES

NO	DATE	DESCRIPTION	REV'D	CHK'D	APP'D
0	7 22 05	INITIAL ISSUE FOR LICENSE RENEWAL	JNV	CMK	KPM

MECHANICAL

LICENSE RENEWAL DRAWING
CONDENSATE TRANSFER SYS
FLOW DIAGRAM

OYSTER CREEK
AmerGen

SHEET 2 OF 2 LR-BR-2004 0

DWG NO. LR-BR-2004 SH. 2 OF 2

D12