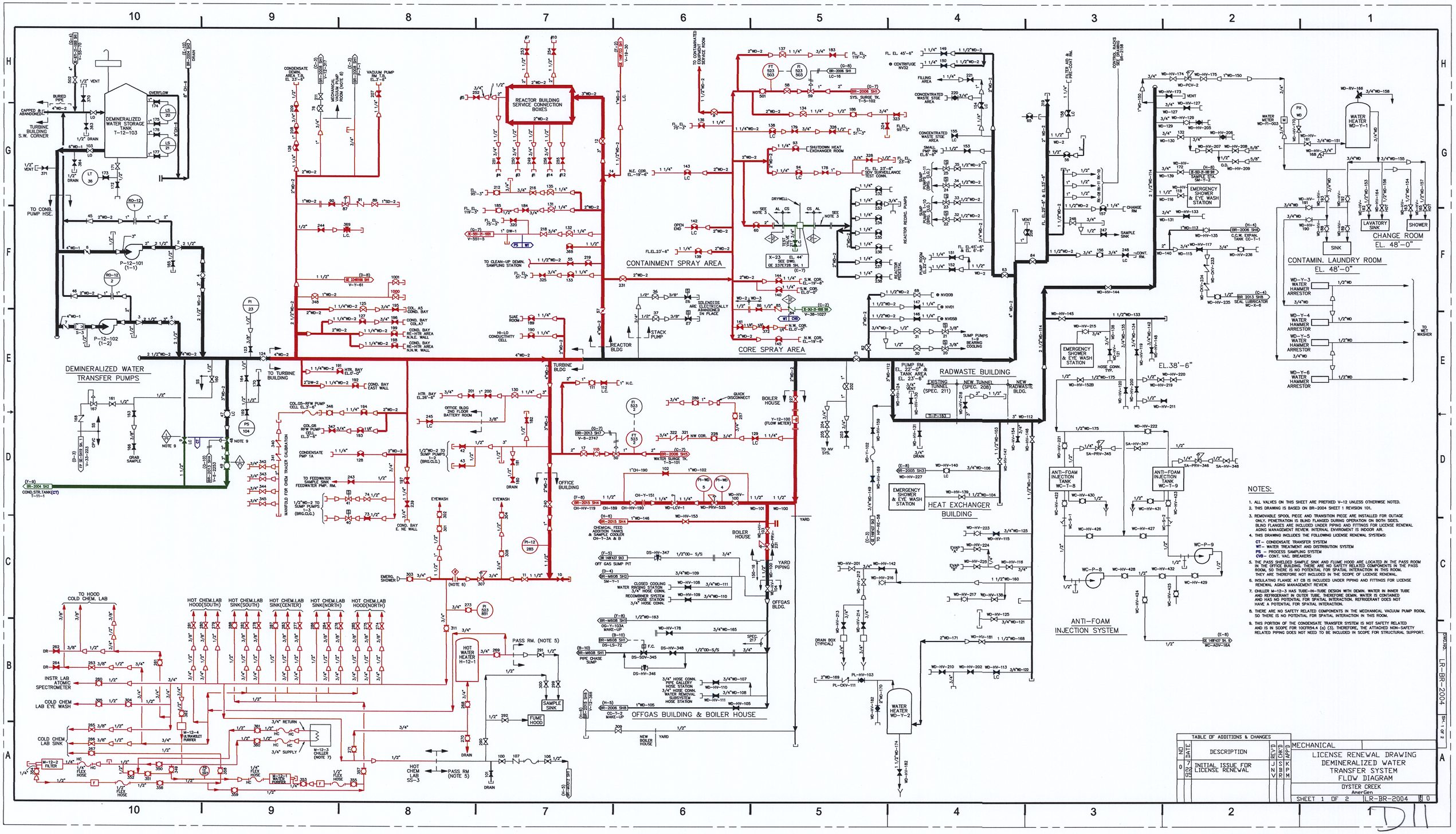

NOTES:

1. ALL VALVES ON THIS SHEET ARE PREFIXED V-12 UNLESS OTHERWISE NOTED.
2. THIS DRAWING IS BASED ON BR-2004 SHEET 1 REVISION 101.
3. REMOVABLE SPOOL PIECE AND TRANSITION PIECE ARE INSTALLED FOR OUTAGE ONLY. PENETRATION IS BLIND FLANGED DURING OPERATION ON BOTH SIDES. BLIND FLANGES ARE INCLUDED UNDER PIPING AND FITTINGS FOR LICENSE RENEWAL AGING MANAGEMENT REVIEW. INTERNAL ENVIROMENT IS INDOOR AIR.
4. THIS DRAWING INCLUDES THE FOLLOWING LICENSE RENEWAL SYSTEMS:
   - CT – CONDENSATE TRANSFER SYSTEM
   - WT – WATER TREATMENT AND DISTRIBUTION SYSTEM
   - PS – PROCESS SAMPLING SYSTEM
   - CVB – CONT. VAC. BREAKERS
5. THE PASS SHIELDED SAMPLE SINK AND FLUME HOOD ARE LOCATED IN THE PASS ROOM IN THE OFFICE BUILDING. THERE ARE NO SAFETY RELATED COMPONENTS IN THE PASS ROOM, SO THERE IS NO POTENTIAL FOR SPATIAL INTERACTION IN THIS ROOM. THEY ARE THEREFORE NOT INCLUDED IN THE SCOPE OF LICENSE RENEWAL.
6. INSULATING FLANGE AT CB IS INCLUDED UNDER PIPING AND FITTINGS FOR LICENSE RENEWAL AGING MANAGEMENT REVIEW.
7. CHILLER M-12-3 HAS TUBE-IN-TUBE DESIGN WITH DEMIN. WATER IN INNER TUBE AND REFRIGERANT IN OUTER TUBE. THEREFORE DEMIN. WATER IS CONTAINED AND HAS NO POTENTIAL FOR SPATIAL INTERACTION. REFRIGERANT DOES NOT HAVE A POTENTIAL FOR SPATIAL INTERACTION.
8. THERE ARE NO SAFETY RELATED COMPONENTS IN THE MECHANICAL VACUUM PUMP ROOM, SO THERE IS NO POTENTIAL FOR SPATIAL INTERACTION IN THIS ROOM.
9. THIS PORTION OF THE CONDENSATE TRANSFER SYSTEM IS NOT SAFETY RELATED AND IS IN SCOPE FOR 10CFR54.4 (a) (3). THEREFORE, THE ATTACHED NON-SAFETY RELATED PIPING DOES NOT NEED TO BE INCLUDED IN SCOPE FOR STRUCTURAL SUPPORT.

TABLE OF ADDITIONS & CHANGES

NO	DATE	DESCRIPTION	REV'D	CHK'D	APP'D
0	7 22 05	INITIAL ISSUE FOR LICENSE RENEWAL	J N V	S B R	K P M

MECHANICAL

LICENSE RENEWAL DRAWING
DEMINERALIZED WATER
TRANSFER SYSTEM
FLOW DIAGRAM

OYSTER CREEK
AmerGen

SHEET 1 OF 2 LR-BR-2004 REV 0

DWG.NO. LR-BR-2004 SH. 1 OF 2

D11