YANKEE ATOMIC ELECTRIC COMPANY

Telephone (413) 424-5261

49 Yankee Road, Rowe, Massachusetts 01367

June 30, 2005
BYR 2005-057

U.S. Nuclear Regulatory Commission
ATTN: Document Control Desk
Washington, D.C. 20555

References:
1. License No. DPR-3 (Docket No. 50-29)
2. Letter, G.A. Maret (YAEC) to USNRC, Updated Final Safety Analysis Report, BYR 2003-049, June 27, 2003

Subject: Final Safety Analysis Report Biennial Update

Yankee Atomic Electric Company (YAEC) herewith encloses one paper copy and one CD-ROM copy of the updated Yankee Nuclear Power Station (YNPS) Final Safety Analysis Report (FSAR). A summary listing of the changes for each FSAR section is also enclosed. This biennial update of the YNPS FSAR is being submitted in accordance with the requirements of 10 CFR 50.71(e)(4), and replaces in its entirety the last update that was submitted in June 2003 (Reference 2). Unless otherwise noted, the update reflects changes made through June 2005.

Should there be any questions regarding this submittal, please contact the undersigned at (413) 424-2300.

Very truly yours,

YANKEE ATOMIC ELECTRIC COMPANY

Jack D. Rollins

Jack D. Rollins
Licensing and Regulatory Affairs Manager

I declare under penalty of perjury that the foregoing is true and correct to the best of my knowledge.
Executed on 6/30/05.

Subscribed and sworn to before me

This 30 day of June, 2005

Nancy J. Rungan

Date Commission Expires: 8/18/06

A053
NMSS01

Enclosures

cc: Ms. M. Miller, USNRC, Region 1 Branch Chief
Mr. J. Kottan, USNRC, Region 1 Inspector
Mr. J. Hickman, Project Manager, NMSS

SUMMARY LISTING OF JUNE 2005 CHANGES TO YNPS FSAR

Section Number	Description of Change
i thru xvii	Revised Table of Contents to reflect permanent removal, and current status and configuration of systems, structures and components.
PSDAR	Updated information relating to the License Termination Plan, dismantlement methods, status of systems, structures, and components, disposal site locations and decommissioning cost estimate. Deleted schedule of activities already completed. Updated the waste volume shipped, actual exposure (through 12/31/04), and the estimated "to go" exposure.
100	No change.
200	Deleted Section 200.4 that is no longer applicable.
211, 215, 220-221, 226-227	Deleted these sections since they are no longer applicable.
229	Revised text to update the description of the electrical system by noting that it is powered by one switchboard via one transformer.
230-231	Deleted these sections since they are no longer applicable.
232	Revised text to describe the Fire Detection System coverage for the ISFSI.
236-239, 241-248, 250-254	Deleted these sections since they are no longer applicable.
255	Revised text to eliminate tanks that no longer exist, and update the status of remaining tanks.
256	No change.
257	Revised text to reflect "current" as opposed to "future" tense for ISFSI component usage. Revised Figure 257-1 to reflect the current site configuration.
300	Revised Figure 300-1 to delete the Yankee's Visitor Center
301-303	No change to these sections.
304	Revised text to clarify current water supply.
305	Revised text to clarify the effluent release path during the final stages of decommissioning.
306	Eliminated reference to the License Termination Plan, which is discussed in the PSDAR.
307	No change.
400	Revised the General Overview to indicate that certain events have been retained until decommissioning activities are complete. Changed the Defueled Emergency Plan to the ISFSI Defueled Emergency Plan. Updated the bounding set of dose conversion factors in Table 400.1 (and associated notes, text and

	references) to make them applicable until 1/1/2008. Updated Table 400.3 to make it consistent with Section 408 with respect to the fuel storage location and governing events included in the NAC-MPC FSAR. Revised the Note to Table 400.4 to include the Vapor Container, and added a reference to it in the table.
401	Changed Defueled Emergency Plan to ISFSI Defueled Emergency Plan.
402	No change.
403	No change.
404	No change.
405	No change.
406	Changed the number and location of propane tanks with respect to the ISFSI; and indicated that the existing NAC analysis for overpressure bounds the explosion of the revised propane tank configuration.
407	Replaced statement that the physical consequences of an on-site transportation event does not adversely affect the Spent Fuel Pit structural integrity with a statement that it does not adversely affect the dry cask storage system at the ISFSI.
408	No change.
500	No change.
501	No change.
502	Revised statement to indicate that the Yankee Decommissioning Quality Assurance Program (YDQAP) requires indoctrination and training of staff personnel involved with YDQAP activities.
503	No change.
504	Text was added that addressed the submittal of the License Termination Plan (LTP) together with revision and supplement, and how the LTP demonstrates that the remaining decommissioning activities will be performed in accordance with Federal Regulations.
505	No change.
506	No change.
507	Changed the job title of various YNPS managers to reflect organizational changes and related responsibilities. Revised the frequency with which radiation workers will receive whole body counting. Deleted statement that installed process and effluent monitors are used in accordance with the Off-Site Dose Calculation Manual. Deleted one reference.
508	On-site waste packaging areas that have been demolished were removed from the text. The text was also revised to indicate that radioactive waste management related programs will be maintained in compliance with the YDQAP, as opposed to

	Technical Specifications. Reference to specific locations for solid radioactive waste storage awaiting shipment was eliminated. Reference to a specific direct off-site dose from storage of low-level radioactive waste in the certain site locations was eliminated. Reference to processing of contaminated liquids in the liquid waste evaporator was eliminated. The text on Airborne Radioactive Waste Processing was revised to eliminate reference to systems and structures that no longer exist.
509	"Plant tests" was changed to "tests" to reflect the current site status.
510	The section on Health and Safety Organization and Functions was revised to reflect the current organization.
511	The section on Above-Ground Fuel Oil Storage Tanks was revised to reflect the removal of tanks and related contaminants.
512	The text was revised to indicate that the protected area is the ISFSI.
513	A Note was added to indicate that the remaining requirements of the Fire Protection Technical Requirements Manual were incorporated into site administration procedures and the manual cancelled. The text was revised to indicate that the implementation of the Fire Protection Program has changed in that the active fire protection systems have been removed from service and is replaced by the onsite incipient fire brigade.
514	No change.
515	Text was added explaining that a revision to the Emergency Plan was issued which eliminated all facets of the Plan not related to the ISFSI.
Appendix A	Updated several plant drawings.

TABLE OF CONTENTS

Page

POST-SHUTDOWN DECOMMISSIONING ACTIVITIES REPORT

SECTION 100

100 SPENT FUEL MANAGEMENT PLAN 100-1

100.1 Background 100-1
100.2 Special Nuclear Material Control 100-1

REFERENCES 100-2

SECTION 200

200 DECOMMISSIONING ACTIVITIES AND PLANNING 200-1

200.1 Introduction 200-1
200.2 Decommissioning Plan Approval 200-1
200.3 Decontamination and Dismantlement: General Information 200-2

200.3.1 Overview 200-2
200.3.2 Detailed Planning and Engineering Activities 200-3
200.3.3 General Decontamination and Dismantlement Considerations 200-3
200.3.4 Decontamination and Dismantlement Process 200-5

200.4 Materials Cutting Station 200-6
200.5 Decontamination and Dismantlement Plan: Systems, Structures and Components 200-6

200.5.1 Overview 200-6

201 REACTOR VESSEL (Deleted – No longer applicable)

202 STEAM GENERATORS (Deleted – No longer applicable)

203 MAIN COOLANT SYSTEM (Deleted – No longer applicable)

204 PRESSURE CONTROL AND RELIEF SYSTEM (Deleted – No longer applicable)

205 CHARGING AND VOLUME CONTROL SYSTEM (Deleted – No longer applicable)

TABLE OF CONTENTS
(Continued)

Page

206 CHEMICAL SHUTDOWN SYSTEM (Deleted – No longer applicable)

207 PURIFICATION SYSTEM (Deleted – No longer applicable)

208 COMPONENT COOLING WATER SYSTEM (Deleted – No longer applicable)

209 PRIMARY PLANT CORROSION CONTROL SYSTEM (Deleted – No longer applicable)

210 PRIMARY PLANT SAMPLE SYSTEM (Deleted – No longer applicable)

211 TEMPORARY WASTE WATER PROCESSING ISLAND SYSTEM (Deleted – No longer applicable)

212 SHUTDOWN COOLING SYSTEM (Deleted – No longer applicable)

213 PRIMARY PLANT VENT AND DRAIN SYSTEM (Deleted – No longer applicable)

214 EMERGENCY CORE COOLING SYSTEM (Deleted – No longer applicable)

215 RADIATION MONITORING SYSTEM (Deleted – No longer applicable)

216 VC VENTILATION AND PURGE SYSTEM (Deleted – No longer applicable)

217 VC HEATING AND COOLING SYSTEM (Deleted – No longer applicable)

218 POST-ACCIDENT HYDROGEN CONTROL SYSTEM (Deleted – No longer applicable)

219 CONTAINMENT ISOLATION SYSTEM (Deleted – No longer applicable)

220 FUEL HANDLING EQUIPMENT SYSTEM (Deleted – No longer applicable)

221 SFP COOLING AND PURIFICATION SYSTEM (Deleted – No longer applicable)

222 MAIN STEAM SYSTEM (Deleted – No longer applicable)

223 FEEDWATER SYSTEM (Deleted – No longer applicable)

224 STEAM GENERATOR BLOWDOWN SYSTEM (Deleted – No longer applicable)

225 EMERGENCY FEEDWATER SYSTEM (Deleted – No longer applicable)

TABLE OF CONTENTS
(Continued)

Page

| 226 AUXILIARY SERVICE WATER SYSTEM (Deleted – No longer applicable)

| 227 DEMINERALIZED WATER SYSTEM (Deleted – No longer applicable)

228 COMPRESSED AIR SYSTEM (Deleted – No longer applicable)

229 ELECTRICAL SYSTEM 229-1

229.1 Description 229-1
229.2 Decontamination and Dismantlement Considerations 229-1

| 230 HEATING SYSTEM (Deleted – No longer applicable)

| 231 VENTILATION SYSTEM (Deleted – No longer applicable)

| 232 FIRE DETECTION SYSTEM 232-1

232.1 Description 232-1
232.2 Decontamination and Dismantlement Considerations 232-1

233 PRIMARY PUMP SEAL WATER SYSTEM (Deleted – No longer applicable)

234 SAFE SHUTDOWN SYSTEM (Deleted – No longer applicable)

235 WATER CLEANUP SYSTEM (Deleted – No longer applicable)

| 236 VAPOR CONTAINER (Deleted – No longer applicable)

| 237 REACTOR SUPPORT STRUCTURE (Deleted – No longer applicable)

| 238 VAPOR CONTAINER POLAR CRANE (Deleted – No longer applicable)

| 239 RADIATION SHIELDING (Deleted – No longer applicable)

240 NEUTRON SHIELD TANK (Deleted – No longer applicable)

| 241 PIPE CHASES (Deleted – No longer applicable)

| 242 FUEL TRANSFER CHUTE (Deleted – No longer applicable)

| 243 YARD AREA CRANE AND SUPPORT STRUCTURE (Deleted – No longer applicable)

| 244 ION EXCHANGE PIT (Deleted – No longer applicable)

TABLE OF CONTENTS
(Continued)

Page

245 PRIMARY VENT STACK (Deleted – No longer applicable)

246 SPENT FUEL PIT AND SPENT FUEL PIT BUILDING (Deleted – No longer applicable)

247 NEW FUEL VAULT (Deleted – No longer applicable)

248 PRIMARY AUXILIARY BUILDING (Deleted – No longer applicable)

249 DIESEL GENERATOR BUILDING (Deleted – No longer applicable)

250 WASTE DISPOSAL BUILDING (Deleted – No longer applicable)

251 SAFE SHUTDOWN SYSTEM BUILDING (Deleted – No longer applicable)

252 POTENTIALLY CONTAMINATED AREA STORAGE BUILDINGS 1 AND 2 AND WAREHOUSE (Deleted – No longer applicable)

253 COMPACTOR BUILDING (Deleted – No longer applicable)

254 SERVICE BUILDING (Deleted – No longer applicable)

255 MISCELLANEOUS TANKS 255-1

255.1 Description 255-1

256 METEOROLOGICAL TOWER 256-1

256.1 Description 256-1

257 INDEPENDENT SPENT FUEL STORAGE INSTALLATION (ISFSI) 257-1

257.1 Description 257-1
257.2 Status 257-2

REFERENCES 257-2

SECTION 300

300 ENVIRONMENTAL – SITE CHARACTERISTICS 300-1

300.1 Demography 300-1
300.2 Geography and Land Use 300-1

TABLE OF CONTENTS
(Continued)

Page

301 METEOROLOGY (GENERAL CLIMATE, SEVERE WEATHER) 301-1

302 HYDROLOGY 302-1

303 GEOLOGY AND SEISMOLOGY 303-1

304 PLANT WATER SUPPLY 304-1

305 PLANT EFFLUENT 305-1

306 ENVIRONMENTAL RADIOLOGICAL STATUS 306-1

306.1 Facility Operating History 306-1
306.2 Radiological Scoping Survey 306-2
306.3 Radiological Environmental Monitoring Program 306-2

REFERENCES 306-3

307 FINAL RADIOLOGICAL SURVEY – SITE RELEASE CRITERIA 307-1

SECTION 400

400 TRANSIENTS 400-1

400.1 General Overview 400-1

400.1.1 Radionuclide Release Limits 400-1
400.1.2 Assumptions 400-2

400.2 Event Identification Process 400-3
400.3 Summary 400-3

REFERENCES 400-5

401 EVENTS AFFECTING OCCUPATIONAL HEALTH AND SAFETY 401-1

401.1 Radiological Events 401-1
401.2 Nonradiological Events 401-1

402 EVENTS AFFECTING PUBLIC HEALTH AND SAFETY 402-1

402.1 Off-Site Radiological Events 402-1
402.2 Nonradiological Events 402-1

TABLE OF CONTENTS
(Continued)

Page

402.3 Radiological Events 402-1
402.4 Radiological Analysis Basis 402-1

403 DECOMMISSIONING ACTIVITY EVENTS 403-1

403.1 Decontamination Events 403-1
403.2 Dismantlement Events 403-2
403.3 Packaging Events 403-3
403.4 Storage Events 403-3
403.5 Materials Handling Events 403-3

404 LOSS OF SUPPORT SYSTEM EVENTS 404-1

404.1 Loss of Off-Site Power 404-1
404.2 Loss of Cooling Water 404-1
404.3 Loss of Compressed Air 404-2

405 FIRE EVENTS 405-1

406 EXPLOSION EVENTS 406-1

406.1 Explosion Events: Vapor Container 406-1
406.2 Explosion Events: Potentially Contaminated Area Warehouse 406-2
406.3 Explosion Events: ISFSI 406-3

407 EXTERNAL EVENTS 407-1

407.1 Aircraft Impact 407-1
407.2 Earthquake 407-1
407.3 External Flooding 407-2
407.4 Tornadoes and Extreme Winds 407-2
407.5 Forest Fire 407-3
407.6 Lightning Event 407-3
407.7 On-Site Transportation Accidents 407-3

408 SPENT FUEL STORAGE EVENTS 408-1

408.1 Events 408-1

TABLE OF CONTENTS
(Continued)

Page

SECTION 500

500 ADMINISTRATION OF THE DECOMMISSIONING PLAN 500-1

500.1 Regulatory Basis for Administration of the Decommissioning Plan 500-1

REFERENCES 500-2

501 DECOMMISSIONING COST ESTIMATE AND FUNDING PLAN 501-1

501.1 Decommissioning Cost Estimate 501-1
501.2 Decommissioning Funding 501-1

502 DECOMMISSIONING ORGANIZATION AND RESPONSIBILITIES 502-1

502.1 YAEC Commitment 502-1

502.1.1 Goals 502-1
502.1.2 Organizational Strategy 502-1

502.2 YAEC Organization and Functions 502-2

503 TRAINING PROGRAM 503-1

503.1 General Employee Training 503-1
503.2 Radiation Worker Training 503-1
503.3 Certified Fuel Handler 503-1
503.4 Specific Job Training 503-2
503.5 Nonradiation Worker Indoctrination 503-2
503.6 Training Records 503-2

REFERENCES 503-3

504 DEFUELED TECHNICAL SPECIFICATIONS 504-1

504.1 Description 504-1

REFERENCES 504-3

505 PROCEDURES 505-1

505.1 Normal Defueled Operating Procedures 505-1
505.2 Emergency Procedures 505-1

TABLE OF CONTENTS
(Continued)

Page

506 MAINTENANCE PROGRAM 506-1

507 RADIATION PROTECTION PROGRAM 507-1

507.1 Introduction 507-1
507.2 Management Policies 507-1

507.2.1 Management Policy Statement 507-1
507.2.2 Administrative Policy 507-2
507.2.3 ALARA Policy 507-2
507.2.4 Regulatory Compliance Policy 507-2
507.2.5 Waste Minimization and Disposal Policy 507-3
507.2.6 Respiratory Protection Policy 507-3

507.3 Decommissioning Exposure Projections 507-3
507.4 ALARA Program 507-3

507.4.1 General Program Description 507-3
507.4.2 ALARA Program Organization and Responsibilities 507-4
507.4.3 ALARA Training and Instruction 507-5

507.5 Administrative Dose Control 507-5
507.6 Radiation Work Permits 507-5
507.7 Area Definitions and Postings 507-6
507.8 External Dosimetry 507-6

507.8.1 General Considerations 507-6
507.8.2 Monitoring Whole Body Dose 507-6
507.8.3 Dosimetry Quality Control 507-7

507.9 Internal Dosimetry Control and Monitoring 507-7

507.9.1 General Considerations 507-7
507.9.2 Bioassay Program 507-7

507.10 Respiratory Protection Program 507-8
507.11 Radioactive Material Controls 507-8
507.12 Surveillance 507-9
507.13 Instrumentation 507-9
507.14 Review and Audit 507-9
507.15 Radiation Protection Program Performance Analysis 507-10

TABLE OF CONTENTS
(Continued)

Page

REFERENCES 507-11

508 RADIOACTIVE WASTE MANAGEMENT 508-1

508.1 Solid Radioactive Waste Processing 508-1

508.1.1 Solid Radioactive Waste Packaging 508-1
508.1.2 Solid Radioactive Waste Storage Awaiting Shipment 508-2
508.1.3 Solid Radioactive Waste Shipment 508-3

508.2 Liquid Radioactive Waste Processing 508-3
508.3 Airborne Radioactive Waste Processing 508-4
508.4 Mixed Waste 508-5
508.5 Radioactive Waste Minimization 508-5
508.5.1 Radioactive Waste Reduction Program 508-5
508.5.2 On-Site Decontamination Methods 508-6
508.5.3 Off-Site Radioactive Materials Processing 508-7

508.6 Decommissioning Radioactive Waste Projections 508-8

REFERENCES 508-9

509 TESTS 509-1

510 OCCUPATIONAL SAFETY PROGRAM 510-1

510.1 Introduction 510-1
510.2 Management Policy Statement 510-1
510.3 Health and Safety Organization and Functions (Deleted) 510-1
510.4 YAEC Occupational Safety Program 510-1
510.5 Safety Training and Meetings 510-2

511 NONRADIOACTIVE WASTE MANAGEMENT 511-1

511.1 Introduction 511-1
511.2 Management Policy Statement 511-1
511.3 Hazardous Material Management 511-1
511.4 Hazardous Waste Management 511-1

511.4.1 Above-Ground Fuel Oil Storage Tanks 511-1
511.4.2 Underground Fuel Oil Storage Tanks (Deleted) 511-2
511.4.3 Waste Oil 511-2
511.4.4 PCB Contaminated Transformer Oil (Deleted) 511-2

TABLE OF CONTENTS
(Continued)

Page

511.4.5 Mercury (Deleted) 511-2
511.4.6 Asbestos Containing Materials 511-2
511.4.7 Lead Based and PCB-Containing Paints 511-2

511.5 Sampling and Remedial Actions 511-3
511.6 Industrial Waste Management 511-3
511.7 Training 511-3

512 SECURITY PLAN 512-1

512.1 General 512-1
512.2 Site Access Control 512-1

REFERENCES 512-3

513 FIRE PROTECION 513-1

513.1 Program Description 513-1
513.2 Fire Protection Program Implementation 513-2

REFERENCES 513-3

514 DECOMMISSIONING QUALITY ASSURANCE PROGRAM 514-1

514.1 Description 514-1

REFERENCES 514-2

515 EMERGENCY PLAN 515-1

APPENDIX A – Plant Drawings

LIST OF TABLES

Table No.	Title	Page
200.2	Decontamination Methods	200-7
200.3	Mechanical Cutting/Removal Methods	200-8
200.4	Thermal Cutting/Removal Methods	200-9
306.1	Summary of Significant Radiological Contamination Events	306-4
400.1	Exclusion Area Boundary Dose per Curie Conversion Factors (BASIS: 1/94)	400-7
400.2	Summary of Materials Released in Postulated Events	400-8
400.3	Summary of Safety Analysis Requirements	400-9
400.4	Summary of Decommissioning Planning Considerations from the Safety Analysis	400-11
504.1	Technical Specification Changes for Transition to Permanently Defueled Condition	504-4

LIST OF FIGURES

Figure No.	Title	Page
257-1	2003 Site Design	257-3
300-1	Site Boundary and Plant Exclusion Area	300-2

LIST OF ABBREVIATIONS, TERMS AND UNITS

AC	Alternating Current
ALARA	As Low As is Reasonably Achievable
ANSI	American National Standards Institute
AOR	Abnormal Occurrence Report
ASME	American Society of Mechanical Engineers
BOP	Balance of Plant
CFH	Certified Fuel Handler
CFR	Code of Federal Regulations
Ci	Curie; Unit of Radioactivity = 3.7E-10 Disintegrations Per Second
CRP	Component Removal Project
DAC	Derived Air Concentration
DC	Direct Current
DECON	Immediate Decontamination and Dismantlement Option
DOE	Department of Energy
DPM	Disintegrations per Minute
EDM	Electrical Discharge Machining
ENTOMB	Encasement in Concrete with Future Dismantlement Option
EPA	Environmental Protection Agency
FERC	Federal Energy Regulatory Commission
FSAR	Final Safety Analysis Report
FTE	Fuel Transfer Enclosure
GET	General Employee Training
GM	Geiger-Mueller
HEPA	High Efficiency Particulate Air (Filter)
ICRP	International Commission on Radiological Protection
INPO	Institute of Nuclear Power Operators
ISFSI	Independent Spent Fuel Storage Installation
ISR	Independent Safety Review
kV	Kilovolt
LLD	Lower Limit of Detection
LLW	Low Level Waste
LPG	Liquid Propane Gas
M&TE	Measuring and Test Equipment
μCi	0.000001 Ci
MCS	Main Coolant System
MDA	Minimum Detectable Activity
MDC	Minimum Detectable Concentration
MDM	Metal Disintegration Machining
mR	0.001 R
μR	0.000001 R
MWe	Megawatts Electric

MWt	Megawatts Thermal
NCRP	National Council on Radiation Protection and Measurements
NIST	National Institute of Standards and Technology
NPDES	National Pollutant Discharge Elimination System
NRC	Nuclear Regulatory Commission
NSARC	Nuclear Safety Audit and Review Committee
NSSS	Nuclear Steam Supply System
NST	Neutron Shield Tank
ODCM	Off-Site Dose Calculation Manual
OSHA	Occupational Safety and Health Administration
PAB	Primary Auxilary Building
PAG	Protective Action Guides
PASS	Post-Accident Sample System
PCA	Potentially Contaminated Area
PCB	Polychlorinated Biphenyls
pCi	0.000000000001 Ci
Person-rem	Collective Radiation Dose to a Population
PIC	Pressurized Ion Chamber
PIR	Plant Information Report
POL	Possession Only License
PORC	Plant Operation Review Committee
PSDAR	Post-Shutdown Decommissioning Activities Report
R	Roentgen; Unit of Radiation Exposure
RCA	Radiation Control Area
RCRA	Resource Conservation and Recovery Act
Rem	Unit of Dose Equivalent
REMP	Radiological Environmental Monitoring Program
RETS	Radiological Effluent Technical Specifications
RWP	Radiation Work Permit
SAFSTOR	Delayed Decontamination and Dismantlement Option
SFP	Spent Fuel Pit
TEDE	Total Effective Dose Equivalent
TLD	Thermoluminescent Dosimeter
TLG	TLG Engineering, Inc.
TS	Technical Specifications
VC	Vapor Container
WD	Waste Disposal
YDQAP	Yankee Decommissioning Quality Assurance Program
YAEC	Yankee Atomic Electric Company
YNPS	Yankee Nuclear Power Station

YANKEE NUCLEAR POWER STATION (YNPS)

POST-SHUTDOWN DECOMMISSIONING ACTIVITIES REPORT (PSDAR)

(As of June 2005)

TABLE OF CONTENTS

Page

Introduction and Overview of the PSDAR 1

Historical Background 1

Decommissioning Alternative 2

Description of Decommissioning Activities 2

Other Decommissioning Considerations 4

Schedule of Decommissioning Activities 8

Decommissioning Cost Estimate 8

Environmental Impacts 9

References 12

Table–1: Status of Systems, Structures and Components Described in FSAR 13

INTRODUCTION AND OVERVIEW OF THE PSDAR

Pursuant to 10CFR50.82(a)(4)(i) and Regulatory Guide 1.185, this appendix contains information concerning post-shutdown activities remaining at the Yankee Nuclear Power Station (YNPS). Section 50.82(a)(4)(i) requires that licensees develop a post-shutdown decommissioning activities report (PSDAR). Licensees with an approved decommissioning plan, however, may "replace their decommissioning plans with a PSDAR update that uses the format and content specified in this document" (Reference 13). The YNPS Decommissioning Plan (Reference 1), which was approved on February 14, 1995 and later became part of the Final Safety Analysis Report (FSAR), describes all remaining decommissioning activities, but in considerably more detail than that required in the PSDAR. Yankee Atomic Electric Company (YAEC) has elected to relocate pertinent information to a PSDAR, which conforms to the guidance in RG 1.185.

HISTORICAL BACKGROUND

YNPS achieved initial criticality in 1960 and began commercial operations in 1961. The Nuclear Steam Supply System is a four loop pressurized water reactor designed by Westinghouse Electric Corporation. The original thermal power design limit of 485 MWt was upgraded to 600 MWt in 1963. The Turbine Generator, also designed by Westinghouse, was rated to produce 185 MWe. Commercial operation ceased in 1992 after about 31 years of operation. During its operation, YNPS achieved an average capacity factor of about 74%.

YNPS shut down on October 1, 1991 in response to regulatory uncertainties associated with the integrity of the Reactor Vessel. During the outage and before February 26, 1992 all fuel assemblies, control rods, and neutron sources were removed from the Reactor Vessel and stored in the Spent Fuel Pit. A total of 533 fuel assemblies are stored in the Spent Fuel Pit. Plant systems required to support spent fuel storage and to support permanently defueled operations were in service until 2003.

On February 26, 1992, the YAEC Board of Directors decided to cease power operations permanently at YNPS. By letter, dated February 27, 1992 (Reference 2), YAEC notified the Nuclear Regulatory Commission (NRC) of the Company's decision to permanently cease power operations at the YNPS. After notifying the NRC, YAEC initiated decommissioning planning and other plant closure activities to safely reduce radioactivity at the site to residual levels, allowing release of the site for unrestricted access.

On August 5, 1992, the NRC amended the YNPS Facility Operating License (DPR-3) to possession only status (Reference 3). This, combined with other amendments and program changes, formed the basis of the Decommissioning Plan. The plan (Reference 1) was submitted by YAEC in accordance with the requirements of 10CFR50.82(a) [pre-1996], that required submittal of a proposed Decommissioning Plan within two years of the permanent cessation of operations. The Decommissioning Plan was subsequently approved on February 14, 1995 (Reference 4). A commitment from the approval process required that the Decommissioning Plan be incorporated into the FSAR.

Plant closure activities, which were commenced following the decision to cease power operations, will continue in accordance with applicable regulatory requirements and YAEC's commitment to

maintain the facility in a safe and economical manner. These activities have included site security modifications, control rod disposal, decontamination, disposal of radioactive components, lay-up of plant equipment, and facility modifications to improve plant operations.

After deciding to close YNPS permanently, YAEC reviewed the plant licensing basis to evaluate the applicability of existing Technical Specifications and NRC regulations to a permanently defueled condition. Beginning in June 2002, spent fuel and GTCC waste were transferred to dry casks and placed on the onsite Independent Spent Fuel Storage Installation (ISFSI). The transfer activities were concluded in June 2003. The remaining Technical Specifications that are applicable have been relocated to the Yankee Decommissioning Quality Assurance Program (Reference 14).

DECOMMISSIONING ALTERNATIVE

Following an evaluation of the three decommissioning alternatives, YAEC selected DECON as the most appropriate alternative for decommissioning YNPS. YAEC's choice of a decommissioning alternative is consistent with NUREG-0586, "Final Generic Environmental Impact Statement on Decommissioning of Nuclear Facilities,"(Reference 6). In that document, the NRC concluded that DECON and SAFSTOR alternatives are reasonable for decommissioning a pressurized water reactor. Implementation of the DECON alternative is within the 60 year limit (after cessation of operation) in 10CFR50.82(a)(3).

DESCRIPTION OF DECOMMISSIONING ACTIVITIES

Since 1993 YAEC has removed and disposed of the steam generators, pressurizer, reactor vessel and reactor vessel internals. The reactor vessel internals components, which are Greater-Than-Class-C (GTCC) waste, remain onsite and are stored within a dry cask along with the 15 dry casks of spent fuel located at the onsite ISFSI. YAEC has sought accelerated acceptance of its spent fuel by the Department of Energy (DOE) in accordance with the current fuel disposal contract. The DOE's position is that they have not yet determined whether priority will be accorded shutdown reactors, or if priority is granted, under what specific circumstances it might be granted.

As of June 2005, all plant systems and components not required to support the storage of spent fuel have been dismantled and disposed of in accordance with the YNPS Decommissioning Plan and Final Safety Analysis Report (References 1 and 12). The current status of the systems, structures, and components are described in Table-1. The purpose of this section is to identify the dismantlement and decontamination activities associated with the remaining systems, structures, and components at YNPS.

The current phase of decommissioning involves the dismantlement and decontamination of the SFP and its supporting systems, structures, and components. In the final phase of decommissioning, the possession only license will be terminated.

A. Remaining Systems, Structures, And Components Not Necessary For Spent Fuel Storage (Phase 1)

After removing systems and components from an area or building, contaminated concrete, steel, and other building materials were decontaminated or removed. The structures listed below are not required to support operation of the ISFSI and have been demolished as of June 2005. Disposal of debris from the demolition activities is ongoing and expected to be complete by the end of 2005. Certain debris meeting appropriate acceptance criteria may remain onsite as approved fill in the Beneficial Use Determination permit.

- Vapor Container
- Reactor Support Structure
- Upper and Lower Pipe Chases
- Fuel Transfer Chute
- South, East, and West Walls of Ion Exchange Pit
- Primary Auxiliary Building
- Waste Disposal Building
- Safe Shutdown Building
- Potentially Contaminated Area (PCA) Buildings 1 and 2
- Compactor Building
- Turbine Building
- Service Building
- Storage Warehouse

Final status surveys are being completed to verify that structures and open land areas meet the release criteria. Independent verification of the results by the NRC will allow for the release of the individual surveyed structures, foundations and open land areas as non-radiologically controlled material. In order to facilitate remediation, the superstructures were demolished prior to remediating substructure and soils work beneath the structures. Measures have been implemented to prevent recontamination of surveyed areas prior to final license termination. Partial release of the site may also be considered to reduce the site to what is needed for the dry cask storage facility.

B. Systems, Structures, And Components Associated With Storage Of Spent Fuel In The Spent Fuel Pool (Phase 2)

With all the spent fuel and GTCC waste from the SFP having been transferred to the ISFSI, the remaining components of the systems listed below have been dismantled and disposed of:

- Radiation Monitoring System
- Fuel Handling System
- SFP Cooling and Purification System

- Temporary Liquid Waste Processing System
- Auxiliary Service Water System
- Demineralized Water System
- Electrical System
- Ventilation System
- Fire Protection and Detection System

Systems and components from an area or building associated with the SFP Island, contaminated structural concrete, steel and other building materials have been decontaminated or removed. The structures listed below were decontaminated during decommissioning of the SFP Island.

- Yard Area Crane and Support Structure
- Ion Exchange Pit
- Primary Vent Stack
- Spent Fuel Pool and SFP Building
- New Fuel Vault
- Potentially Contaminated Area Warehouse
- Service Building

C. License Termination (Phase 3)

The final phase of decommissioning will take place after all spent fuel and GTCC waste is taken off-site in order to complete the dismantlement and decontamination of the ISFSI.

Decommissioning of the ISFSI would consist primarily of the disposal of the Vertical Concrete Casks (VCCs) and the concrete storage pad. The VCC design minimizes neutron activation, thereby generating minimal radioactive waste. This waste should qualify for disposal at a low-level radioactive waste disposal site.

The 10CFRPart 50 license may be terminated after the last stage of final status surveys and independent NRC verification. Site restoration activities will then be conducted.

OTHER DECOMMISSIONING CONSIDERATIONS

The dismantlement and, if necessary, decontamination of contaminated systems, structures and components was accomplished using the following three approaches: decontamination in place, dismantlement and decontamination, or dismantlement and disposal. Furthermore, a combination of these methods was used to reduce contamination levels, worker radiation exposures, and project costs. General considerations applicable to these activities are described in detail in Section 200 of the FSAR and are summarized below. An approved work control process is used to perform demolition, decommissioning, and or decontamination work activities in accordance with an approved Independent Safety Review.

A. General Decommissioning Activities Relating to Removal of Radiological Components & Structures

Components were safely and efficiently removed using techniques and appropriate methods for the particular circumstances and consistent with Decommissioning Work Packages. Openings in components were typically covered and sealed to minimize the spread of contamination. The components were moved to a processing area for volume reduction and packaging into containers for shipment to a processing facility for decontamination or a low-level radioactive waste disposal facility. Buried contaminated components (e.g., piping, drains, etc.) will be decontaminated in place or excavated.

B. Decontamination Methods

Contaminated systems and components were removed and sent to an off-site processing facility or to a low level radioactive waste disposal facility. On-site decontamination of systems and components were generally be limited to activities needed to maintain personnel exposure as low as is reasonably achievable, to expedite equipment removal, and to control the spread of contamination.

Application of coatings and hand wiping were the preferred methods for stabilizing or removing loose surface contamination. If other methods were utilized (e.g., grit blasting, high pressure water), airborne contamination control and waste processing systems were used as necessary to control and monitor any releases of contamination.

Contaminated and activated concrete as well as other contaminated materials was removed and sent to a low-level radioactive waste disposal facility. Concrete removal methods, such as scabbling and scarifying, controlled the removal depth to minimize the waste volume produced. Vacuuming the dust and debris effluent with HEPA filtration minimized the need for additional respiratory protection control measures. While these methods represent the most practicable and widely used decontamination methods available at this time, YAEC also considered new decontamination technologies as appropriate.

C. Dismantlement Methods

YAEC used two basic dismantlement methods:

- *Mechanical Methods* - Mechanical methods machine the surfaces of the material that is being cut. Typically, these methods are capable of cutting remotely without generating significant amounts of airborne contamination. This attribute made these methods attractive for removing most of the contaminated piping, equipment, and components at YNPS. The outside diameter machining method, in particular, was best suited for cutting large bore contaminated piping.

- *Thermal Methods* - Thermal methods melt or vaporize the surfaces of material. The cutting debris is transported from the cut region with a gas jet or water spray. Although thermal methods are significantly quicker than mechanical methods, they have high power requirements and generate airborne contamination when used on contaminated systems in air. Generation of airborne contamination was easily controlled when the method was used underwater. Thermal methods are suitable for segmenting large vessels in areas that can easily be sealed, filtered, or maintained underwater. The method is also suitable for use at a cutting station with air filtration. Thermal methods are appropriate for removing structural steel if it has been decontaminated or if a local contamination envelope with HEPA filtration is established. Appropriate lead and/or PCB paint removal controls must also be implemented.

D. Special or Unusual Programs

There are no special or unusual programs. All procedures and processes used at YNPS are consistent with those considered in the Final Generic Environmental Impact Statement (FGEIS).

E. Removal of Low Level Radioactive Waste (LLW) and Compaction or Incineration

LLW is processed in accordance with plant procedures and sent to LLW disposal facilities. While no incineration of low level Radwaste (to remove radionuclides) will occur onsite, YAEC has used an off-site licensed facility. YAEC has no intention, however, to use onsite compaction at this time.

F. Soil Pavement and Concrete Remediation

Soils and pavement are being surveyed and characterized in accordance with the site radiological characterization program. As necessary, soils, concrete and pavement is remediated (i.e., removed, processed and disposed of at a licensed facility) if determined to contain contamination levels above the derived concentration guideline levels (DCGLs) established in the License Termination Plan.

G. Processing and Disposal Site Locations

Currently, there are several facilities available for (1) the processing of waste materials to achieve volume reduction prior to disposal or (2) the disposal of low-level radioactive waste. These locations include (but are not limited to) GTS Duratek - Barnwell, South Carolina; Envirocare - South Clive, Utah; GTS Duratek - Oak Ridge, Tennessee; RACE in Memphis Tennessee

H. Removal of Mixed Wastes

Mixed wastes are managed according to all applicable federal and state regulations including NRC handling, storage, and transportation regulations. Mixed wastes from YNPS are

transported only by authorized and licensed transporters and shipped only to authorized and licensed facilities. YAEC has used an appropriate approved process to render mixed waste non-hazardous onsite. A thermal desorption system was used to remove PCB materials from soils.

I. Storage/Removal of Spent Fuel and GTCC Waste

In June 2003, YAEC completed transfer of spent fuel and GTCC waste to an onsite Independent Spent Fuel Storage Installation (ISFSI). YAEC cannot make a precise determination of when spent fuel and GTCC waste will be removed from the YNPS because the availability of a licensed DOE high level waste repository is uncertain. Currently, YAEC expects that the turnover of spent fuel and GTCC waste to the DOE will be completed in 2022.

J. License Termination Plan, Final Radiological Survey and Site Release Criteria

The objective for decommissioning the Yankee Nuclear Power Station (YNPS) is to reduce residual radioactivity to levels that permit release of the site for unrestricted use and for termination of the 10CFR50 license, in accordance with the Nuclear Regulatory Commission's (NRC's) site release criteria set forth in 10CFR20, Subpart E. The purpose of the YNPS License Termination Plan (LTP) is to satisfy the requirements of 10CFR50.82, "Termination of License" using the guidance provided in Regulatory Guide 1.179, "Standard Format and Content of License Termination Plans for Nuclear Reactors". NRC staff review guidance, in the form of NUREG-1700 and NUREG-1757 has also been considered.

In May 1997, YAEC submitted to the Commission for approval an LTP for YNPS, pursuant to 10CFR50.82, as amended by 62 Fed. Reg. 39091 (July 29, 1996). YAEC's LTP employed a survey methodology based on the "Manual for Conducting Radiological Surveys in Support of License Termination (Reference 9)," known as the NUREG-5849 Methodology. Subsequently, the Commission, jointly with a group of other federal agencies, approved an alternative survey methodology, known as NUREG-1575, "Multi-Agency Radiation Survey and Site Investigation Manual" (MARSSIM – Reference 10). In May 1999 (Reference 11), YAEC advised the Commission that it intended to shift from the NUREG-5849 Methodology to MARSSIM and withdrew its previously submitted LTP application. YAEC submitted a new LTP in 2003 incorporating the more recent regulatory guidance and descriptive of the MARSSIM final status survey (FSS). FSS is being conducted to verify that structures and open land areas meet the release criteria. An independent NRC contractor is also conducting verification surveys, to confirm YNPS FSS results that the remaining structures and open land areas meet the unrestricted release criteria . After final status surveys and NRC verification, individual surveyed structures and open land areas will be released. YAEC will, nevertheless, maintain control over the site until termination of its 10CFRPart 50 license.

K. Site Restoration

Following termination of the YNPS possession only license by the NRC, YAEC will complete site restoration activities. Many of these activities have been initiated during the dismantlement period. Activities associated with the Vapor Container included removal of internal structures, disassembly of the Vapor Container shell, and demolition of the Reactor Support Structure and other concrete structures. The remaining plant structures are being demolished. All building foundations will be back filled with concrete and/or structural fill. Site areas will be graded and landscaped as necessary.

SCHEDULE OF DECOMMISSIONING ACTIVITIES

As stated above, decommissioning will be completed in three phases. The first phase consisted of the decontamination and dismantlement of remaining systems and components that did not support fuel storage. Next the spent fuel was removed from the SFP and the SFP was drained in 2003. The current phase of decommissioning involves the dismantlement and decontamination of the SFP and its supporting systems, structures and components. The final phase of decommissioning will involve the termination of the possession only license. License termination of the ISFSI will occur after all spent fuel has been taken off-site. All decommissioning activities accomplished to date have resulted in no significant adverse environmental impacts.

YAEC expects to complete the current phase of dismantlement and decontamination and final status surveys by late 2005. The design and construction of a dry cask storage facility was completed in 2001. Fuel transfer activities commenced in 2002 and were completed in 2003. Following the transfer of spent fuel and GTCC waste from the SFP, decommissioning of the SFP island was begun and should be completed over a period of approximately two years, including final status surveys. The dry cask storage facility is expected to be operated from 2002 to 2022, when the last fuel assembly is assumed to be taken off-site. Using this assumption, the YNPS license will be terminated after the dry cask storage facility is decommissioned.

Planning sequences and dates are based on current knowledge and could change in the future. Dry storage is addressed in the spent fuel management plans contained in the FSAR. Yankee will continue to inform the NRC of all major changes to the planned decommissioning activities in accordance with 10CFR50.82(a)(7).

DECOMMISSIONING COST ESTIMATE

The YNPS Decommissioning Plan (Reference 1) was submitted to the NRC in December 1993 and included a cost study for operating the facility through a safe storage period, decommissioning the facility, restoring the site, and storing spent fuel until its transfer to the DOE. In October 1994, Yankee completed a revised cost study to assist the NRC in its review of the Decommissioning Plan and to fulfill a commitment to Federal Energy Regulatory Commission (FERC). This 1994 cost study was based on the assumption that dismantlement activities would not begin until a low-level radioactive waste disposal site became available to Yankee.

In June 1995, the State of South Carolina re-opened the low-level waste facility in Barnwell, South Carolina to radioactive waste generators throughout the United States. In response, Yankee updated

the cost estimate to reflect several significant changes in parameters affecting decommissioning costs. This study, called the 1995 Cost Study, was filed with FERC in August 1995. This study was a site-specific cost study that adjusted the 1994 Cost Study for differences in decommissioning timing, waste disposal costs, and one year of escalation. The 1995 Cost Study estimate of "to-go" costs remaining as of January 1995 was $303.2 million. In addition, as part of the final December 1995 FERC settlement, Yankee was allowed to collect another $3.2 million in the decommissioning trust fund to adjust for adjudicatory delays during re-approval of the Decommissioning Plan, bringing the total January 1995 "to-go" cost to $306.4 million (1995 dollars).

As required by the FERC settlement, an updated cost estimate was filed in December 1999. The total decommissioning costs remaining (as of January 1, 1999) are $246 million in constant value 1999 dollars. The total cost of decommissioning (expressed in 1999 dollars) is summarized below:

• Expended dollars (1993 – 1998)	$207,100,000
• Dismantlement Activities	147,700,000
• Spent Fuel Storage	98,300,000
• **Total Cost to Remove/Dismantle YNPS**	**$453,100,000**

Yankee has collected its decommissioning funds through its Power Contracts. The collections were deposited in an independent and irrevocable trust at a commercial bank, with the principal and interest used to discharge decommissioning obligations as they are incurred. This trust is in compliance with 10CFR50.75(e)(1)(ii) and a copy of the trust document has been provided to the NRC. The Power Contracts obligate the purchasers for the full costs of decommissioning YNPS, including spent fuel. The FERC orders received by Yankee acknowledge the continuing obligation of the purchasers with respect to the full cost of decommissioning YNPS. The periodic reviews of decommissioning cost studies mandated by FERC provide the mechanism for updating the required payments under the Power Contracts to assure adequate funds for that purpose.

Yankee Atomic submitted a new decommissioning cost estimate to FERC in April 2003 to seek additional revenue requirements billed through 2010 for the period through December 2022. That estimate supercedes the 1999"to go" cost estimate. As of 1/1/2003 the remaining cost to complete NRC required decommissioning activities is $121.1 million stated in 2003 dollars. An update was provided to the NRC on March 31, 2005 providing the current status of the Decommissioning fund (Reference 15).

ENVIRONMENTAL IMPACTS

YAEC prepared an Environmental Report [Reference 5] to evaluate all actual or potential environmental impacts associated with the proposed decommissioning activities. This evaluation used as its basis NUREG-0586, "Final Generic Environmental Impact Statement (FGEIS) on Decommissioning of Nuclear Facilities," [Reference 6] and the site-specific environmental assessment from the re-capture of the construction period time duration [Reference 7].

This Environmental Report concluded that the impacts due to decommissioning of the YNPS will be bounded by the previously issued environmental impact statements, specifically the FGEIS and previously issued environmental assessments. This is principally due to the following reasons:

- The postulated impacts associated with the method chosen, DECON, have already been considered in the FGEIS.
- There are no unique aspects of the plant or decommissioning techniques to be utilized that would invalidate the conclusions reached in the FGEIS.
- The methods to be employed to dismantle and decontaminate the site are standard construction based techniques fully considered in the FGEIS.
- The site-specific person-rem estimate for all decommissioning activities has been conservatively calculated using methods similar to and consistent with the FGEIS.

Specifically, this review concludes that the YAEC decommissioning will result in generally positive environmental effects, in that:

- Radiological sources that create the potential for radiation exposure to site workers and the public will be eliminated.
- The site will be returned to a condition that will be acceptable for unrestricted use.
- The thermal impact on the Deerfield River from facility operations will be eliminated.
- Noise levels in the vicinity of the facility will be reduced.
- Hazardous materials and chemicals will be removed.
- Local traffic will be reduced (fewer employees, contractors and materials shipments than are required to support an operating nuclear power plant).

Furthermore, the YNPS decommissioning will be accomplished with no significant adverse environmental impacts in that:

- No site specific factors pertaining to YNPS would alter the conclusions of the FGEIS.
- Radiation dose to the public will be minimal.
- Radiation dose to decommissioning workers will be a fraction of the operating experience.
- Decommissioning is not an imminent health or safety problem and will generally have a positive environmental impact.

The total radiation exposure impact for decommissioning was estimated in the Decommissioning Plan (Reference 1) to be approximately 744 person-rem. This estimate was re-evaluated in 1996, resulting in a lower value of 580 person-rem (Reference 8). The estimate of 580 person-rem has been re-evaluated and the current estimate is 594 person-rem. The actual exposure, through 12/31/04, for decommissioning activities is 592.4 person-rem. The estimated radiation exposure for completion of the decommissioning activities at YNPS accounts for the one remaining dose

intensive task of decontamination and dismantlement of the spent fuel pit. This "to go" exposure has been estimated to be 1.6 person-rem (excludes public and transportation dose).

Radiation exposure due to transportation of radioactive waste has been conservatively estimated to be approximately 7 person-rem. This value is bounded by the FGEIS value of 100 person-rem for transportation occupational exposure.

Radiation exposure to off-site individuals for expected conditions, or from postulated accidents is bounded by the Environmental Protection Agency's Protective Action Guidelines and NRC regulations. The public exposure due to radiological effluents will continue to remain well below the 10CFRPart 20 limits and the ALARA dose objectives of 10CFR50, Appendix I. This conclusion is supported by the YNPS Annual Effluent Release Reports in which individual doses to members of the public are calculated for station liquid and gaseous effluents.

No significant impacts are expected from the disposal of low-level radioactive waste (LLW). The total volume of YNPS low-level radioactive waste for disposal was estimated in the Decommissioning Plan to be approximately 132,000 ft^3. A review of the annual effluent reports filed with the NRC has determined that, through the end of 2002, 144,184 ft^3 of LLW from YNPS has been shipped off-site for burial. The waste volume that remains at YNPS is bounded by the FGEIS estimate of 647,670 ft^3 for a reference PWR.

Since the approval of the Decommissioning Plan (Reference 1) and the issuance of the Decommissioning Environmental Report (Reference 5), YNPS has identified the presence of solid Polychlorinated Biphenyl's (PCB's) in some paint coatings. As in the case of radiologically contaminated lead paint, asbestos, and other hazardous materials, contaminated paint that contains PCB's will be managed according to all applicable federal and state regulations.

No significant environmental impacts are anticipated in the event that LLW is required to be temporarily stored onsite because adequate storage space exists and LLW storage will be in accordance with all applicable federal and state regulations.

The non-radiological environmental impacts from decommissioning are temporary and are not significant. The largest occupational risk associated with decommissioning YNPS is related to the risk of industrial accidents. The primary environmental effects are short term, small increases in noise levels and fugitive dust in the immediate vicinity of the site, as well as truck traffic to and from the site for hauling equipment and waste. No significant socioeconomic impacts, other than those associated with cessation of operation (loss of jobs and taxes), or impacts to local culture, terrestrial or aquatic resources such as the Sherman Reservoir and Deerfield River have been identified.

REFERENCES

1. Letter, J. K. Thayer (YAEC) to T. E. Murley (USNRC), Decommissioning Plan for Yankee Nuclear Power Station (YNPS), December 20, 1993.

2. Letter, A. C. Kadak (YAEC) to T. E. Murley (USNRC), Permanent Cessation of Power Operations at the Yankee Nuclear Power Station, BYR 92-024, February 27, 1992.

3. Letter, M. B. Fairtile (USNRC) to J. M. Grant (YAEC), Issuance of Amendment #142 to Facility License DPR-3 – Yankee Nuclear Power Station, August 5, 1992.

4. Letter, M. B. Fairtile to J. A. Kay (YAEC), Order Approving the Decommissioning Plan and Authorizing Decommissioning of the Yankee Nuclear Power Station, February 14,1995.

5. Yankee Nuclear Power Station Decommissioning Environmental Report, December 1993.

6. NUREG-0586, Final Generic Environmental Impact Statement on Decommissioning of Nuclear Facilities, August 1988.

7. Letter, M. B. Fairtile (USNRC) to G. Papanic (YAEC), dated June 2, 1988.

8. USNRC Atomic Safety and Licensing Board Docket No. 50-029-DCOM, Supplemental Affidavit of Russell A. Mellor, September 3, 1996.

9. NUREG-5849, "Manual for Conducting Radiological Surveys in Support of License Termination," Draft, June 1992.

10. NUREG-1575, "Multi-Agency Radiation Survey and Site Investigation Manual," December 1997.

11. Letter, D.K. Davis (YAEC) to USNRC, "Withdrawal of Proposed License Amendment to Approve Yankee Nuclear Power Station's License Termination Plan," May 25, 1999.

12. Yankee Nuclear Power Station Final Safety Analysis Report.

13. Regulatory Guide 1.185, Standard Format and Content for Post-Shutdown Decommissioning Activities Report, July 2000.

14. Letter J.B. Hickman (USNRC) to J.A. Kay (YAEC), Issuance of Amendment #157 RE: Deletion of Operational and Administrative Requirements Following Fuel Transfer to ISFSI, NYR 03-027, April 18, 2003.

15. Letter Jack Rollins (YAEC) to DCD, Decommissioning Funding Assurance-(10CFS50.75(f), March 31, 2005.

TABLE–1: STATUS OF SYSTEMS, STRUCTURES AND COMPONENTS DESCRIBED IN FSAR

System, Structure, or Component	FSAR Section	Status Note 1
Reactor Vessel	201	Removed.
Steam Generators	202	Removed.
Main Coolant System	203	Removed.
Pressure Control and Relief System	204	Removed.
Charging and Volume Control System	205	Removed.
Chemical Shutdown System	206	Removed.
Purification System	207	Removed.
Component Cooling System	208	Removed.
Primary Plant Corrosion Control System	209	Removed.
Primary Plant Sample System	210	Removed.
Waste Disposal System	211	Removed.
Shutdown Cooling System	212	Removed.
Primary Plant Vent and Drain System	213	Removed.
Emergency Core Cooling System	214	Removed.
Radiation Monitoring System	215	Removed.
VC Ventilation and Purge System	216	Removed
VC Heating and Cooling System	217	Removed.
Post-Accident Hydrogen Control System	218	Removed.
Containment Isolation System	219	Removed.
Fuel Handling Equipment System	220	Removed.
SFP Cooling and Purification System	221	Removed.
Main Steam System	222	Removed.
Feedwater System	223	Removed.
Steam Generator Blowdown System	224	Removed
Emergency Feedwater System	225	Removed.
Service Water System	226	Removed.
Demineralized Water System	227	Removed.
Compressed Air System	228	Removed.
Electrical System	229	Partially removed. in service. [Note 2]
Heating System	230	Removed.
Ventilation System	231	Removed.
Fire Protection and Detection System	232	Removed.
Primary Pump Seal Water System	233	Removed.

System, Structure, or Component	FSAR Section	Status Note 1
Safe Shutdown System	234	Removed.
Water Cleanup System	235	Removed.
Vapor Container	236	Removed
Reactor Support Structure	237	Removed
Vapor Container Polar Crane	238	Removed
Radiation Shielding	249	Removed
Neutron Shield Tank	240	Removed.
Pipe Chases	241	Removed
Fuel Transfer Chute	242	Removed.
Yard Area Crane and Support Structure	243	Removed.
Ion Exchange Pit	244	Removed.
Primary Vent Stack	245	Removed.
Spent Fuel Pit and Spent Fuel Pit Building	246	Removed.
New Fuel Vault	247	Removed.
Primary Auxiliary Building	248	Removed.
Diesel Generator Building	249	Removed.
Waste Disposal Building	250	Removed.
Safe Shutdown System Building	251	Removed.
Potentially Contaminated Area Storage Buildings 1 and 2 and Warehouse	252	Removed.
Compactor Building	253	Removed.
Service Building	254	Removed.
Miscellaneous Tanks	255	Most removed; one tank remaining to be decontaminated.
Meteorological Tower	256	Function no longer required. A 10-meter tower located at the ISFSI provides wind speed and direction for onsite assessment purposes.

Note 1: Certain foundations, duct banks, piping and slabs will remain onsite, once the structures have been determined to be acceptable from an environmental and radiological standpoint, as required by the MADEP Beneficial Use Determination. This material will also comply with the LTP.

Note 2: With all spent fuel and Greater-Than-Class-C waste having been removed from the Spent Fuel Pool, the remaining portions of this system or structure that were in service to support SFP operations have been decontaminated and dismantled. The portions of the system required to support the ISFSI will continue in service.

100 SPENT FUEL MANAGEMENT PLAN

100.1 Background

This section documents the YNPS spent fuel management plan in accordance with 10CFR50.54(bb) (Reference 100-1). This regulation also requires a funding plan for spent fuel storage. The spent fuel storage cost estimate and funding plan are presented in the PSDAR.

YAEC contracted with NAC International to transfer the spent fuel from the spent fuel pit to a dry cask storage facility. The location of the new storage facility is at the south end of the YNPS site (see figure 257-1). Currently, there are 533 fuel assemblies stored in 15 NAC Multi-Purpose Canisters (MPCs) on the ISFSI pad. These fuel assemblies were discharged from the reactor between 1972 and 1992. There were also a number of failed fuel pins that were consolidated into a Reconfigured Fuel Assembly (RFA) which was then transferred to a dry cask. The Greater than Class C (GTCC) radioactive waste in the form of canisters containing reactor vessel internals (core baffle) and dross material and having the same external dimensions as fuel assemblies have also been transferred to a NAC-MPC. Several miscellaneous GTCC radioactive items also are stored in the NAC-MPC containing the GTCC (e.g. neutron sources, fuel assembly cage components, fixed incore detector wires, etc.).

YAEC is currently seeking accelerated acceptance of YNPS's spent fuel by the Department of Energy in accordance with the current fuel disposal contract. The Department of Energy's current position is that they have not yet determined whether priority will be accorded shutdown reactors, or if priority is granted, under what specific circumstances it might be granted. For planning purposes, fuel shipments are assumed to be completed in 2022. This projection is based on the Department of Energy's Acceptance Priority Ranking, Annual Capacity Report, and an extrapolation beyond the 10 year Department of Energy outlook. For planning purposes, YAEC's current decommissioning cost estimate assumes storage of fuel in the dry storage facility until 2022.

100.2 Special Nuclear Material Control

Information regarding Special Nuclear Material Control is available for inspection by authorized personnel.

REFERENCES

100-1 59-FR-10267, Notification of Spent Fuel Management and Funding Plans By Licensees of Prematurely Shut Down Power Reactors, March 4, 1994.

100-2 YRP 435/92, Spent Nuclear Fuel Storage Study Report and Recommendations, B. W. Holmgren, J. M. Buchheit, R. A. Mellor to J. K. Thayer, October 9, 1992.

100-3 YRP 303/93, Impact of Wet Spent Fuel Storage on Decommissioning, P. A. Rainey to R. A. Mellor, July 15, 1993.

200 DECOMMISSIONING ACTIVITIES AND PLANNING

200.1 Introduction

This section presents a description of decommissioning activities and tasks for the implementation of the dismantlement activities at YNPS. The information presented in this section reflects initial planning of decommissioning activities. YAEC intends to complete more detailed planning prior to initiating each decommissioning activity. Detailed planning includes engineering design; ALARA planning; and cost, schedule, and resource refinement.

Decommissioning will be completed in three phases. The first phase which has been completed consisted of the decontamination and dismantlement of certain structures systems and components which do not support fuel storage. After the removal of all spent fuel from the Spent Fuel Pit (SFP), the second phase of decommissioning will involve the dismantlement and decontamination of the SFP and the remaining systems, structures and components. The final phase of decommissioning will involve the termination of the possession only license. License termination will occur after all spent fuel has been removed off-site and, the dry cask storage facility is decommissioned. It is expected that decommissioning activities will be accomplished with no significant adverse environmental impacts.

200.2 Decommissioning Plan Approval

A Decommissioning Plan (Reference 500-1) was prepared and submitted in response to the requirements of 10CFR50.82, "Application for Termination of License," using guidance from Draft Regulatory Guide DG-1005 (Reference 500-2). The Decommissioning Plan provided the framework for the decommissioning process by which the YNPS site will be returned to an unrestricted use condition.

The Decommissioning Plan was approved by NRC on February 14, 1995 (Reference 500-3). Following NRC approval, the Decommissioning Plan was incorporated into the FSAR in accordance with Reference 500-4 and the FSAR was conformed to the Decommissioning Plan using the process described in 10CFR50.71(e). Essential features and functions that will be relied upon during decommissioning are now described in the FSAR.

In 2000, Yankee created a Post-Shutdown Decommissioning Activities Report (PSDAR) within the FSAR. NRC Draft Regulatory Guide DG-1071 recommends that licensees with an approved Decommissioning Plan (Dplan) "extract pertinent detail from the decommissioning plan and submit a PSDAR update in the format and content specified by [DG-1071]." Based on the NRC draft guidance, Yankee segregated, updated and condensed certain information concerning post-shutdown decommissioning activities in a manner that conforms to the standard format and content of a PSDAR.

200.3 Decontamination and Dismantlement: General Information

200.3.1 Overview

This section presents a general description of the decontamination and dismantlement activities that are necessary to decommission YNPS. The information presented in this section provides sufficient detail to address the adequacy of the programs and procedures, ensuring safe and economic decommissioning of YNPS. The information in this section has been incorporated into the more detailed planning that will be completed prior to initiating each decommissioning activity. Detailed planning includes engineering design; ALARA planning; and cost, schedule, and resource refinement. Sections 201 through 256 present specific information for YNPS systems, structures and components.

The description of decontamination and dismantlement options includes the words "should" and "must" to describe alternatives. The word "should" implies that the alternative is preferred, however, alternatives may be available that are equally acceptable. The word "must" implies that the alternative is based on a programmatic, regulatory or safety analysis requirement. If another alternative is chosen, the corresponding requirements must be re-evaluated to ensure that the original intent is not adversely affected.

Before the start of the dismantlement activities, a decommissioning administrative and engineering organization will be mobilized. The following activities will occur:

- Initiation of detailed project planning.
- Preparation of engineering specifications and procedures.
- Procurement of special equipment needed to support decommissioning.
- Negotiation of service contracts required for decommissioning activities.
- Reactivation and return to service of systems required for decommissioning.

The engineering and preparation phase is followed by the initiation of plant dismantlement activities. The contaminated systems will be removed, packaged, and either shipped to an off-site processing facility or shipped directly to a low level radioactive waste disposal facility. Decontamination of plant structures will be completed concurrently with the equipment and system removal process. Structure decontamination will include a variety of techniques ranging from high pressure water washing to removal of concrete to allow release of the structures. Contaminated structural material will be packaged and either shipped to a processing facility for decontamination or shipped directly to a low level radioactive waste disposal facility.

Following the removal of contaminated systems, structures and components, a comprehensive final radiation survey will be conducted. The survey will verify that radioactivity has been reduced to sufficiently low levels allowing unrestricted release of the site. Successful completion of the final survey will be demonstrated through a verification survey completed by an independent contractor selected by the NRC.

200.3.2 Detailed Planning and Engineering Activities

YAEC is the prime entity with license responsibility for YNPS decommissioning. In this position, YAEC has direct control and oversight over all decommissioning activities. This role is similar to that taken by YAEC during the 31 year operation of YNPS. In that role, YAEC provided operational, technical, licensing, project management, and contractor oversight for all plant systems, structures and components.

Detailed project implementation plans will be developed to support decontamination and dismantlement activities before these activities are initiated. The plans will be used as a project management tool to support detailed engineering activities and ALARA Program implementation, estimate decommissioning labor requirements, and manage decommissioning cost and schedule.

Demolition and abatement activities will be implemented using plant approved programs and procedures that have received appropriate reviews (e.g., ISR).

200.3.3 General Decontamination and Dismantlement Considerations

The following are general decontamination and dismantlement considerations that will be used during the decommissioning of systems, components and structures at YNPS. Specific decontamination and dismantlement considerations are presented in Sections 201 through 256 for applicable systems, structures and components.

a. Caution must be used when working in areas which contain systems or structures that support operation of the YNPS ISFSI. The systems and structures cannot be affected by removal activities. Work packages must include specific steps either to physically protect the systems and structures or to establish safe load paths and protective zones around the systems and structures.

b. Hazardous materials and wastes must be processed in accordance with the YNPS Hazardous Waste Management Program or equivalent YAEC approved contractor program (Section 511), including the following:

   - Asbestos containing material (e.g., insulation) must be removed and processed in accordance with the YNPS Asbestos Control Program or equivalent YAEC approved contractor program (Section 511.4.6). This activity should be scheduled prior to initiating equipment removal in an area.

   - Structures and components containing lead based coatings must be processed in accordance with the guidance presented in Section 511.4.7.

   - Paint coatings containing solid Polychlorinated Biphenyls (PCBs) must be managed in accordance with all federal and state regulations.

c. Decommissioning activities that use liquids must ensure that contaminated liquids will be processed in accordance with the YNPS ODCM and NPDES discharge permit.

d. The following considerations must be incorporated into tank and vessel sludge removal activities:

- The method used must ensure that any liquid inadvertently discharged from the system is processed in accordance with the YNPS ODCM and NPDES discharge permit.
- Sludge removed from the system must be stabilized prior to shipment.
- Waste water must be processed and analyzed before discharging from the facility.
- The use of a high pressure water rinse should be used before dismantlement, if necessary, to reduce internal contamination levels.

e. Radioactive particulate emissions will be monitored to the maximum extent practicable. The following must be implemented in accordance with the requirements of the Off-Site Dose Calculation Manual (ODCM):

- Local HEPA filtration systems must be used when activities could result in the release of significant radioactive particulates or hazardous materials. Monitoring of the HEPA Filtration System exhaust will be performed when required by the ODCM. Prior to initial deployment and periodically, each HEPA System is tested against Dioctyl Phthalate (DOP) with an acceptance criterion of 99.95% filter retention. This ensures that airborne particulate releases to the environment have been reduced to as low as is reasonably achievable.

f. Electrical and pneumatic services must be isolated from the systems, components and structures prior to dismantlement.

The following should be implemented:

- Pumps, fans, heaters, motor operated valves, motor operated dampers and instrumentation power sources should be isolated and disconnected from station electrical and control systems at the motor control centers, supply breakers, fuse blocks, and at the equipment.
- Pneumatically operated components and instrumentation should be isolated from the Compressed Air System at the root and equipment isolation valves.

g. Openings in components must be enclosed with a protective cover to confine internal contamination.

h. Explosive methods will not be used during the YNPS decommissioning without completion of a separate safety review. The analysis must include the effects of the use of explosives and assess the impact on the YNPS ISFSI and associated support systems.

i. Before removing contaminated systems, structures and components with significant external contamination, they should be wiped down to remove external contamination or painted with a coating to stabilize external contamination.

j. Contaminated piping and tubing should be dismantled as follows:

- Large bore piping (greater than 2-1/2 inch diameter) should be cut into manageable lengths.
- Small bore piping (less than 2-1/2 inch diameter) and tubing should be cut using an appropriate method based on the radiological conditions.
- Remote cutting systems should be used as appropriate to maintain worker exposure as low as is reasonably achievable.
- Underground piping must be visually examined after it is excavated to ensure that it is physically sound prior to cutting and removal.

k. Contaminated supports should be removed in conjunction with equipment removal activities.

l. Systems and components should be removed from areas and buildings prior to the commencement of area structural decontamination activities.

m. Centralized processing and cutting stations should be considered to facilitate packaging of components for shipment to an off-site processing facility or a low level radioactive waste disposal facility.

200.3.4 Decontamination and Dismantlement Process

The decontamination and dismantlement of contaminated systems, structures and components may be accomplished by either decontamination in place, removal and decontamination, or removal and disposal. A combination of these methods may be utilized to reduce contamination levels and reduce worker radiation exposures.

In general, contaminated and potentially contaminated systems, structures and components will be removed as follows:

- Decommissioning work packages with sufficient detail will be developed, reviewed and approved in accordance with project and plant programs and procedures (Section 200.3.2)
- Plant tag-out procedures will be used to de-energize electrical and control equipment, isolate and drain fluid systems, and isolate and depressurize pneumatic systems. Radiation Protection procedures will be used to ensure radiological requirements for control of contamination, worker protection and ALARA program are satisfied. Occupational Safety standards will be observed.
- Contaminated concrete and structural steel components with contamination above accepted site criteria will be decontaminated or removed when all contaminated and uncontaminated systems and equipment have been removed from the area or building. This contaminated concrete will then be removed and packaged into containers for shipment to a low level radioactive waste disposal facility. Contaminated structural steel components may be moved to a processing area for volume reduction and packaging into containers for shipment to a processing facility for decontamination or low level radioactive waste disposal facility.

- Buried contaminated components (e.g., piping, drains, conduit) with contamination levels above accepted site criteria will be excavated. After excavation, the components will be examined to ensure that they are physically sound prior to cutting and removal. Most buried contaminated piping is located in steel conduits (i.e., pipes enclosed in pipes). Contamination controls will be modified as necessary if the components are significantly degraded.

A summary of currently available methods for decontamination of plant equipment and structures is presented in Table 200.2. The methods presented in this table are the most practicable and widely utilized at the time that the Decommissioning Plan was generated. However, new decontamination technologies will be adopted, if appropriate.

A summary of currently available methods for cutting plant equipment and structures is presented in Tables 200.3 and 200.4. The methods presented in this table are the most practicable and widely utilized at the time that the Decommissioning Plan was generated. However, new dismantlement technologies will be adopted, if appropriate.

200.4 Deleted

200.5 Decontamination and Dismantlement Plan: Systems, Structures and Components

200.5.1 Overview

As required, Sections 201 through 256 present an initial description of the decontamination and dismantlement activities that are necessary to decommission each potentially contaminated system, structure and component at YNPS. Detailed planning includes engineering design; ALARA planning; and cost, schedule, and resource refinement.

TABLE 200.2

Decontamination Methods

Method	Advantages	Disadvantages
Carbon Dioxide Blasting	• Low waste volume	• High operating costs • HEPA filtration may be required to control airborne contamination • High setup costs
Abrasive Blasting	• Very effective for surface contamination	• Large waste volumes • HEPA filtration may be required to control airborne contamination
Hydro Blasting	• Remote operation possible • Very effective for surface contamination • Easy to use	• Large waste volumes • HEPA filtration may be required to control airborne contamination
Strippable coatings	• Easy to use • Good for fixing loose surface contamination	• Only effective on loose contamination
Scarifying	• Effective on coated and uncoated surfaces • Removes concrete to ¼ inch deep	• Cannot cut rebar • Vacuum with HEPA may be used to control waste and dust
Scabbling	• Removes concrete to ¼ inch deep per pass • Easy to control removal depth per pass	• Cannot cut rebar • Vacuum with HEPA may be used to control waste and dust • Not as effective on coated surfaces
Spalling	• Low airborne contamination • Good for limited access and small areas	• Slow process • Cannot cut rebar
Vacuum Cleaning	• Easy to use • Fast removal times	• Only effective on loose contamination • HEPA filtration may be required to control airborne contamination

TABLE 200.3

Mechanical Cutting/Removal Methods

Method	Applicability	Advantages	Disadvantages
Machining	• Contaminated pipe cutting • Vessel segmentation	• Minimum airborne contaminatation • Easy setup • Remote operate • Quick cutting times	• Unit is heavy in larger sizes
Abrasive Water-Jet	• Tank segmentation • Concrete cutting	• Remote operation possible	• Large amounts of liquid waste • HEPA filtration may be required to control airborne contamination • Slow cutting times
Abrasive Wheel	• Steel cutting	• Inexpensive • Easy to setup and operate • Can cut rebar and imbedded steel	• HEPA filtration may be required to control airborne contamination • Slow cutting times
Diamond Wire	• Concrete cutting	• Capable of cutting thick concrete • Can cut rebar and imbedded steel • Remote operation possible	• Slow cutting times • Large amounts of liquid waste
Metal Disintegration Machining (MDM)	• Vessel segmentation	• Capable of cutting thick steel • High precision obtainable • Remote operation possible	• Slow cutting times • Complex control system required
Mechanical Shears	• Tubing, cable and pipe cutting	• Quick cutting times • Best for tubing and sheet metal	• Cannot be used on large times
Band and Reciprocating Saws	• Contaminated pipe and steel cutting	• Easy to use	• Slow cutting times • Cannot be used on large items
Impact Hammer, Wrecking Ball, Concrete Crushing Method	• Concrete removal	• Inexpensive • Fast removal rates	• HEPA filtration may be required to control airborne contamination • Creates rubble

TABLE 200.4

Thermal Cutting/Removal Methods

Method	Applicability	Advantages	Disadvantages
Plasma Arc	• Tank segmentation • Uncontaminated pipe cutting • Structural steel cutting • Contaminated piping (with appropriate radiological controls)	• Fast cutting times • Remote operation possible	• HEPA filtration may be required to control airborne contamination from contaminated component removal • Large power supply required
Oxy-Fuel	• Tank segmentation • Uncontaminated pipe cutting • Structural steel cutting • Contaminated piping (with appropriate radiological controls)	• Easy to use • Fast cutting times • Remove operation possible	• HEPA filtration may be required to control airborne contamination from contaminated component removal • Ineffective on stainless steel • Uses inflammable gases
Electric Discharge Machining (EDM)	• Vessel segmentation	• Capable of cutting thick steel • High precision obtainable • Remote operate possible	• Slow cutting times • Complex control system required
Flame Cutting	• Concrete cutting	• Capable of cutting thick concrete structures • Low waste volumes	• HEPA filtration may be required to control airborne contamination • Difficult to use
Arc Saw	• None at this time	• Capable of cutting thick steel • Remote operation possible	• HEPA filtration may be required to control airborne contamination • Large power supply required • Heavy weight of unit • Limited experience with unit

229 ELECTRICAL SYSTEM

229.1 Description

The on-site electrical system is powered by the 13.8 kV Massachusetts Electric Line. The system consists of a transformer, switchboard, motor control centers, distribution panels and the necessary associated instrumentation and controls (Drawing Numbers 9699-FE-1JA, -1P, -1Q).

The 13.8 kV Massachusetts Electric Line also powers the Furlon House, Training Center and Trash Compactor. The electrical system at YNPS provides power to equipment which must remain energized during the final phase of decommissioning. All on-site electrical equipment is powered from a 480 V AC switchboard via a 13.8 kV/480 V, 100 kVA transformer. The 1600 amp Secondary Side Switchboard powers equipment located on the Secondary side of the site including the Gate House and ISFSI. Back-up power for portions of the site electrical system is provided by a 175 kW Security Diesel Generator.

229.2 Decontamination and Dismantlement Considerations

General decontamination and dismantlement considerations are presented in Section 200.3.

232 FIRE DETECTION SYSTEM

232.1 Description

The Fire Detection System provides the equipment needed to detect fires that could occur in structures supporting the ISFSI. The system consists of detectors, and the necessary associated instrumentation.

The Fire Detection system provides coverage in the Gatehouse and within the Instrument Enclosure Building at the ISFSI. All other portions of the Fire Protection and Detection System have been removed from service and/or disposed of. Fire Protection Program requirements are described in Section 513.

232.2 Decontamination and Dismantlement Considerations

General decontamiantion and dismantlement considerations are presented in Section 200.3. The following is a specific system consideration:

- Modifications to the Fire Detection System require review and modifications, as necessary, to the YNPS Fire Protection Plan (Section 513).

255 MISCELLANEOUS TANKS

255.1 Description

This section presents descriptions of plant tanks. Some of these tanks are potentially contaminated, or are needed to support decommissioning activities and/or the ISFSI.

- Fire Water Storage Tank - The Fire Water Storage Tank (TK-55) provided a back-up source of water to the Fire Protection System. The tank is constructed of steel. The tank has been removed from service and is awaiting dismantlement.

- Fuel Oil Storage Tanks – Description of above-ground fuel oil storage tanks is presented in Section 511.4.1.

256 METEOROLOGICAL TOWER

256.1 Description

A Meteorological Tower installed at the ISFSI pad provides real time capability to determine wind speed and direction for on-site emergency planning purposes.

257 INDEPENDENT SPENT FUEL STORAGE INSTALLATION (ISFSI)

257.1 Description

The Independent Spent Fuel Storage Installation (ISFSI) provides dry cask storage of spent nuclear fuel and Greater-Than-Class-C (GTCC) waste generated at the YNPS. Dry cask storage of spent nuclear fuel is conducted under the general license provisions of 10CFR72, Subpart K and 10CFR30. The NAC International, Inc., Multi-Purpose Canister (MPC) system (Docket No. 72-1025), which received a certificate of compliance in April 2000 (Reference 257-1), is used at the ISFSI.

The ISFSI is designed to store a combination of up to 18 NAC-MPC dry fuel or GTCC waste storage casks. It is located in the southwest corner of the site (Figure 257-1) and consists of a concrete pad, access road, security fences, temperature monitoring instrumentation, lighting, security, ISFSI Instrumentation Enclosure.

The ISFSI facility has 16 Vertical Concrete Casks (VCCs). Each VCC contains a Transportable Storage Canister (TSC). The TSCs contain either spent fuel or GTCC waste.

The VCC is the storage overpack for the TSC and provides structural support, shielding, protection from environmental conditions, and natural convection cooling of the TSC during storage. The VCC is a reinforced concrete structure with a carbon steel inner liner. Each VCC is approximately 160 inches in height, has an outside diameter of approximately 128 inches and weighs approximately 155,000 lbs. Each VCC has 4 inlet vents evenly spaced around the bottom of the VCC. There are also 4 outlet vents spaced evenly around the top of the VCC, offset by 45 degrees in order to provide a non-planar path for the natural circulation of air around the TSC and to minimize radiation streaming.

The TSC is a stainless steel circular cylindrical shell with a welded bottom plate. It has an outside diameter of approximately 71 inches and is approximately 123 inches in height. The TSC can accommodate up to 36 Yankee Class spent fuel assemblies. The TSC may also contain one or more Reconfigured Fuel Assemblies (RFAs), which are designed to hold Yankee Class spent fuel rods as intact or damaged fuel or fuel debris. An RFA can accept up to an equivalent of 64 full length spent fuel rods in an 8 by 8 array. The stainless steel RFA container has the same external dimensions of a standard fuel assembly. The weight of a fully loaded TSC is approximately 55,000 lbs.

The VCC Temperature Monitoring System is designed to monitor the thermal performance of each concrete cask. The system is comprised of a network of thermocouples at the outlet vents of all the casks and at four different points for ambient temperature that feed into a panel within the ISFSI Instrument Enclosure where temperature readings can be obtained.

Radiation monitoring using Thermoluminesent Dosimeters (TLDs) is in place to demonstrate compliance with 10CFR72.104 and 40CFR190.

The ISFSI pad is within a protected area located to the south of the general site area of the YNPS. The ISFSI pad is a reinforced structural concrete pad that was designed to store and support the loaded VCCs. The pad is approximately 48 feet wide by 160 feet long. The east end of the pad is

elevated approximately 30 inches above the grade of the access road to facilitate the loading/removal of the VCCs from the heavy-haul trailer. The VCCs are moved by using air pads and a specially rigged fork lift vehicle (cask primary mover).

The ISFSI Enclosure Building is a free standing building, measuring approximately 12 feet wide by 15 feet long by 10 feet in height, located within the protected area to the west of the ISFSI pad. The ISFSI Enclosure Building houses the temperature monitoring panel, I/O racks, transformers, Uninterruptible Power Supplies (UPS), communications, fire detection and other ISFSI and security related equipment.

The ISFSI protected area is fenced, monitored by security, and has alarms to prevent unauthorized access. Access to the ISFSI area is controlled by the YNPS Security Department.

257.2 Status

The ISFSI construction is complete. Spent nuclear fuel and GTCC waste transfer is complete. The YNPS ISFSI contains 15 NAC-MPC Spent Fuel Storage Casks in addition to 1 NAC-MPC Cask that contains GTCC waste.

REFERENCES

257-1 Letter, NRC to NAC International, Inc., dated March 17, 2000, Certificate of Compliance for the NAC International, Inc., Multi-Purpose Canister (MPC) System (TAC No. L22907).

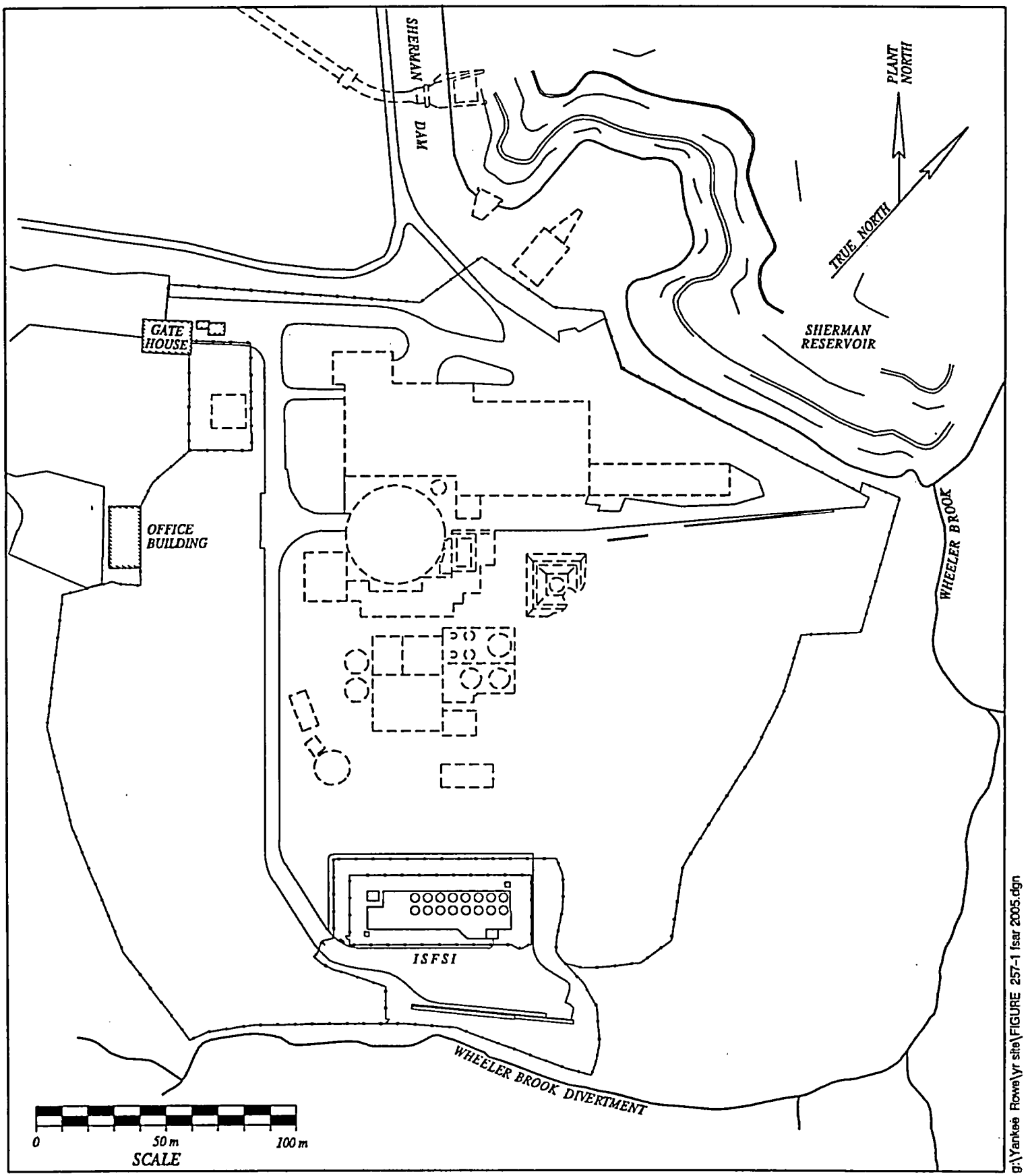

FIGURE 257-1
2005 SITE DESIGN

300 ENVIRONMENTAL – SITE CHARACTERISTICS

300.1 Demography

YNPS is located in the Berkshire Hills of Franklin County in Rowe, Massachusetts. The site is at the bottom of a deep valley along the Deerfield River on the southeast bank of Sherman Reservoir. The area surrounding the site is mostly wooded with very steep gradients on both sides of the Deerfield River.

The YNPS site boundary and plant exclusion area is shown in Figure 300-1.

300.2 Geography and Land Use

The population density in the rural area surrounding the YNPS site is low. Within one mile of the site, for example, the population is 48 (based on 1989 Massachusetts municipal census counts). The populations of the two closest towns, Rowe and Monroe, are 354 and 141, respectively. The nearest population center of 25,000 or more is Pittsfield, Massachusetts, located about 21 miles south-west of the site. The regional population is expected to remain virtually unchanged over the next decade.

Land use near the site is made up of a few farms and some commercial businesses. The centers of Rowe and Monroe have small, mixed clusters of local businesses, municipal buildings, and residences, with homes scattered throughout the area. There is no large industrial activity within five miles of the site; the only industry in the area is the YNPS and several hydroelectric facilities along the Deerfield River.

The nearest highway and railroad are each about five miles south of the site. The closest airport is in North Adams, Massachusetts, about ten miles west of the site.

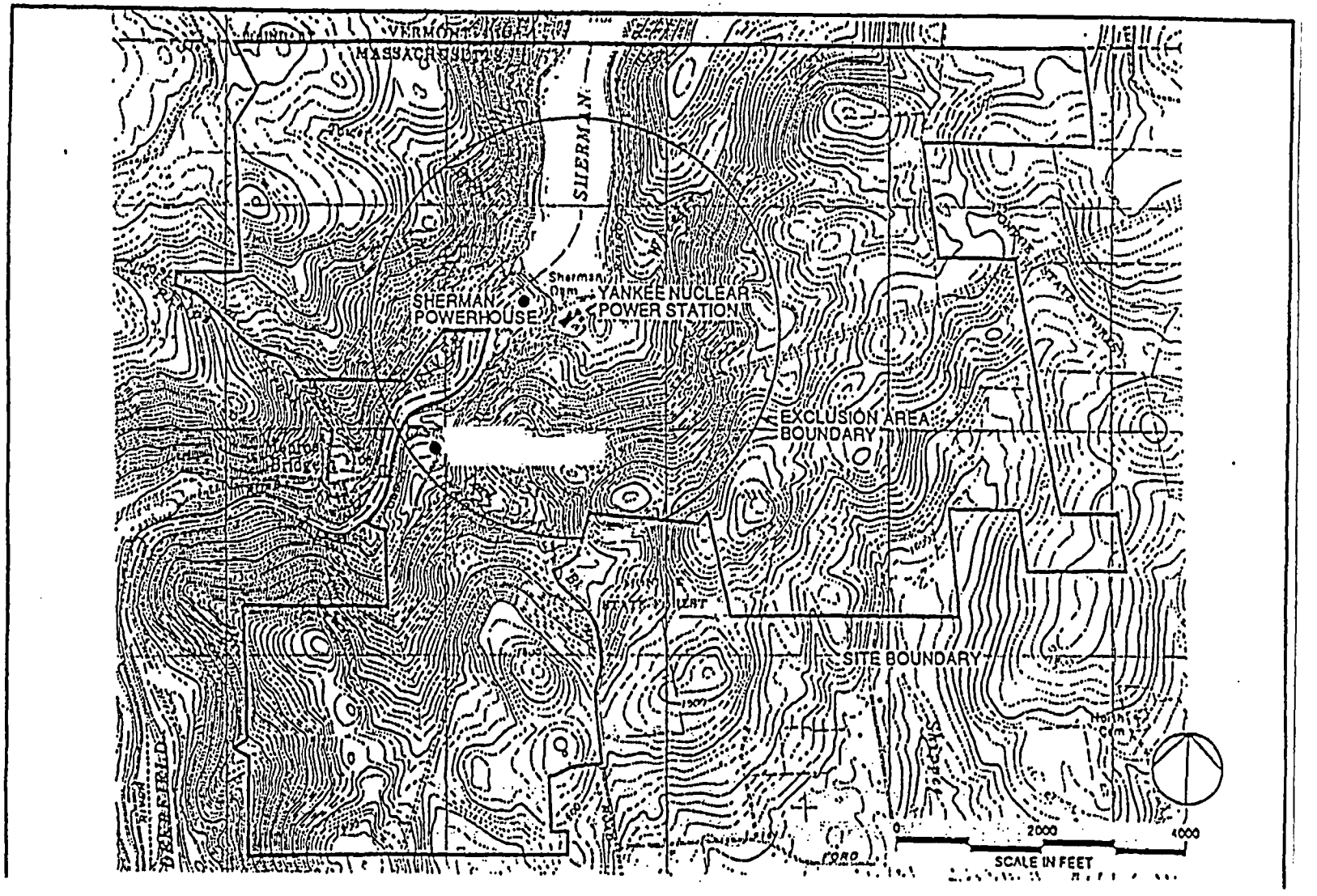

FIGURE 300-1

Site Boundary and Plant Exclusion Area

301 METEOROLOGY (GENERAL CLIMATE, SEVERE WEATHER)

The site lies in the prevailing westerlies, the belt of eastward moving air that is found in middle latitudes. Many storms pass over Massachusetts compared to other parts of the United States. This is a result of extensive air masses originating at higher and lower latitudes. The three major air mass types that affect the site are cold, dry, subartic air from Canada; warm, moist air from the Gulf of Mexico; and cool, damp air from the North Atlantic Ocean.

The hills on either side of the site rise about 1000 feet above ground level within one mile and extend from 12 miles north to 8 miles south southeast of the site. This feature affects the winds. There is, for instance, a high frequency of occurrence of "channel flow" up and down the Deerfield River valley. Also, night -time drainage flow down the east side of the river valley occurs frequently.

Normal daily temperatures range from 10°F in January to 80°F in July. Recorded extreme temperatures for the site region are -25°F and 98°F. Thunderstorms occur about 28 days per year; the annual flash density of ground lightning strikes is four flashes per square kilometer.

The site design wind speed (defined as the "fastest-mile" wind speed at 30 feet above the ground with a 100 year return period) is 80 mph. Hail storms occur about two days annually and freezing rain about 12 days per year. The maximum radial ice thickness expected for the region is 1.25 inches. Mean annual snowfall at the site totals 100 inches, with maximum snow depth on the ground totaling about 40 inches.

302 HYDROLOGY

The site is located on the east bank of the Deerfield River adjacent to Sherman Reservoir, which serves as the source of the cooling water for the plant. The drainage area upstream of the plant is characterized by a dendritic pattern, is 236 square miles, and has an average annual rainfall of between 40 and 50 inches.

The Deerfield River flow is highly regulated by two large, upstream hydroelectric reservoirs. The average long-term flow near the plant is 738 ft^3/sec.

Bedrock in the region is not a significant source of groundwater nor are there major bedrock aquifers within the site area. The direction of groundwater flow under the site is from the recharge areas on the slopes surrounding the plant toward the Deerfield River.

303 GEOLOGY AND SEISMOLOGY

The regional bedrock geology is complex; bedrock age ranges from 100 million to over one billion years old and is comprised of mostly a mosaic of metamorphic and igneous rocks. The youngest deposits are glacial soils, 10 to 12 thousand years old. Most volcanic and sedimentary rock in the area are now metamorphosed.

The site is situated on dense Wisconsinian-aged glacial till. YNPS structures are founded on this till, which ranges from 0 to 140 feet thick across the site. Bedrock under the till is part of the lower Cambrian Hoosac formation and consists of quartz-albite-biotite gneiss and a rusty gneiss in adjacent areas. Underlying these are garnet schist and a layered gneiss with some dolomitic marble, with the latter units belonging to the lower Cambrian or older Cavendish formation. A south-plunging anti-cline, whose axis is just east of the site, defines local bedrock structure.

Site bedrock is hard, internally welded metamorphic rock, not subject to significant deterioration. Bedrock fracturing is not a prominent structural feature of this bedrock; outcrops exhibit either no joints or minor, discontinuous joint surfaces. Fracture pattern analysis of site vicinity joints, joint sets, and faults show no anomalous trends for fractures. This suggests the absence of any through-going zones of post-metamorphic faulting or shear.

The site is in the Western New England Fold Belt province. It borders the Adirondack Uplift province to the west, the Valley and Ridge province to the southwest, and the New York Recess to the south. The Southeast New England Platform and Merrimack Synclinorium occur to the east and northeast, respectively.

Regional seismic events are very infrequent and do not cause surface faulting. Only two events in the province were greater than Intensity V (MM). These events were 125 miles and 210 miles from the site. The site seismic design level for new seismically qualified installations at the plant is a peak ground acceleration of 0.19 g. The return period is between 10,000 and 100,000 years.

304 PLANT WATER SUPPLY

Potable water is supplied by an on site bedrock well.

305 PLANT EFFLUENT

The liquid effluent release path used during the final stages of decommissioning will be via the storm drain system. All liquid discharges will be controlled in accordance with the National Pollutant Discharge Elimination System (NPDES) permit and the ODCM.

Portable water treatment equipment is used in accordance with the ODCM and NPDES permit in conjunction with temporary construction dewatering storage tanks.

Surface water use downstream from the site is mostly for recreation and sport fishing, with limited irrigation. Water supply for the municipalities within five miles downstream of the plant is from private wells. The closest public water supplies are well fields 20 to 25 miles downstream of the plant.

306 ENVIRONMENTAL RADIOLOGICAL STATUS

306.1 Facility Operating History

Yankee Nuclear Power Station (YNPS) achieved initial criticality in 1960 and began commercial operation in 1961. On October 1, 1991, YNPS shut down after operating 31 years. On February 26, 1992, the YAEC Board of Directors decided to cease power operation permanently. YNPS operated with an average lifetime capacity factor of about 74%.

There were occurrences, during the operation of YNPS, that resulted in contamination of structures and components inside buildings located in the Radiation Control Area. In addition, several occurrences resulted in the contamination of the grounds outside of the buildings but inside the Radiation Control Area. Most of these events were minor, resulting in minimal contamination. Following detection of an event, actions were taken to remove and control contamination and to institute corrective actions to preclude future occurrences.

Table 306.1 presents a summary of significant radiological contamination occurrences at YNPS. The primary sources used to compile and review events were: Control Room Logs, Abnormal Occurrence Reports, Licensee Event Reports, Plant Information Reports and reports to the Atomic Energy Commission, Nuclear Regulatory Commission and the Commonwealth of Massachusetts. Interviews were also conducted with present employees, recently discharged employees and retired long-term employees. The purpose of the interviews was to gain additional information concerning plant occurrences and operations that may have resulted in residual contamination.

The most significant contamination event at YNPS was leakage from the Ion Exchange Pit. Significant leakage was first identified in May 1964. An unsuccessful attempt to isolate the leak was made in July 1964 by installing and sealing a concrete plug in the pit sump. Following that attempt, a decision was made to empty the resin capsules and drain the pit. This activity was completed in April 1965. In May 1965, a crack in a vertical joint at the northwest corner of the Ion Exchange Pit was found after draining the pit. The crack was repaired and the Ion Exchange Pit floor and walls were sealed to prevent further leakage.

In 1965, tritium was detected in Sherman Spring. The presence of tritium was attributed to migration of tritium from the Ion Exchange Pit into the groundwater. At the present time, the tritium concentration is significantly below the Environmental Protection Agency community water system limit (Section 306.3 and Reference 306-11). In addition, the water from Sherman Spring, as well as the Deerfield River, into which it flows, is not used for human consumption.

Systems in contact with the main coolant have been contaminated with activated corrosion products and fuel residue. In 1977, YNPS began converting from stainless steel clad fuel to zircaloy clad fuel. Following conversion, fuel clad failures began occurring. Most of the failures were minor failures of clad integrity, releasing iodines and other fission gasses into the main coolant. However, after Cycle 13, a number of peripheral fuel rods failed as a result of damage caused by water jetting from the core baffle spacer plates. These fuel failures were sufficient to cause contamination of the Reactor Vessel and Main Coolant System with fuel residue. Baffle jetting damage was eliminated by the addition of spacer plugs at the bottom of the core baffle spacer plates and modifying fuel assembly design. No significant fuel failures occurred after the modifications were implemented.

Primary system integrity was very good during plant operations. Minor leakage from Main Coolant System flanges and valve stems to the Vapor Container occurred during plant operations. However, leakage rates were maintained below Technical Specification limits. The Vapor Container was decontaminated during refueling outages to remove contamination that may have accumulated during previous operating cycles. The YNPS steam generators performed well during the 31 year operating life. There was no significant leakage between the primary and secondary sides of the generators.

The results of the historical review were incorporated into the design and implementation of the radiological scoping survey and sampling program.

306.2 Deleted

306.3 Radiological Environmental Monitoring Program

The Yankee Decommissioning Quality Assurance Program establishes the Radiological Environmental Monitoring Program. The purpose of the program is to monitor the radiation and radionuclides in the environs of the plant. The program includes the following elements:

- Monitoring, sampling, analysis, and reporting of radiation and radionuclides in the environment in accordance with the methodology and parameters presented in the YNPS Off-Site Dose Calculation Manual.

- Performance of a land use census to ensure that changes in the use of areas at and beyond the site boundary are identified and that modifications to the monitoring program are made if required.

- Participation in an interlaboratory comparison program to ensure that independent checks on the precision and accuracy of the measurements of radioactive materials in environmental sample matrices are performed as part of the Quality Assurance Program for environmental monitoring.

The Yankee Decommissioning Quality Assurance Program (YDQAP) requires the submittal of an annual report to the NRC. The report shall include summaries, interpretations and analysis of trends of the results of the Radiological Environmental Monitoring Program for the reporting period.

The Radiological Environmental Monitoring Program was initiated in 1958, about two years before YNPS began commercial operation. The program has been executed continuously since its inception. In recent years, the program has incorporated continuous monitoring of air and automatic composite sampling of river water, as well as sampling of groundwater, river sediment, fish, cow milk, goat milk, vegetables, and maple syrup. Direct radiation exposure measurements, both in the immediate plant vicinity and at more distant locations, have been made continuously through the use of a network of thermoluminescent dosimeters (TLDs).

The Radiological Environmental Monitoring Program will continue to be updated and modified to reflect changes to the potential source term, the plant environs, and the surrounding land use during YNPS decommissioning.

REFERENCES

306-1 NUREG/CR-5849 (Draft), "Manual For Conducting Radiological Surveys in Support of License Termination," June 1992.

306-2 YRC-1024, "Basis for the Radiological Status of Plant Systems and Structures," P. Hollenbeck, September 1993.

306-3 REG 90/93, "Dose Conversion Factors For Yankee Rowe Piping," Y. J. Yu to R. A. Mellor, April 2, 1993.

306-4 YRC-1031, "Yankee Rowe Component Activation Analysis," K. J. Morrissey, September 1993.

306-5 NUREG/CR-3474, "Long-Lived Activation Products in Reactor Materials," August 1984.

306-6 REG 147/93, "Dose Rate Estimate of the YNPS Reactor Vessel," Y. J. Yu to R. A. Mellor, June 4, 1993.

306-7 "YNPS Outdoor Site Scoping Data," F. X. Bellini, E. R. Cumming to P. Hollenbeck, September 24, 1993.

306-8 YNPS Off-Site Dose Calculation Manual.

306-9 NUREG/CR-5512, Vol. 1, "Residual Radioactive Contamination from Decommissioning - Technical Basis for Translating Contamination Levels to Annual Total Effective Dose Equivalent," Final Report, October 1992.

306-10 1992 Annual Radiological Environmental Operating Report.

306-11 BYR 94-047, RAI on YNPS Decommissioning Plan and Decommissioning Environmental Report.

306-12 NUREG-1575, "Multi-Agency Radiation Survey and Site Investigation Manual (MARSSIM)," December 1997.

306-13 Letter, D. K. Davis (YAEC) to NRC, "Withdrawal of Proposed License Amendment to Approve Yankee Nuclear Power Station's License Termination Plan," May 25, 1999.

TABLE 306.1

Summary of Significant Radiological Contamination Events

Date	Description of Occurrence	Radiological Consequences
9/20/61 Incident Report No. 61-15	A main coolant sample container was dropped between the Primary Auxiliary Building and the Waste Disposal Building. The contents of the container spilled onto the asphalt surface.	About 35 μCi of radioactivity was released as a result of the spill on the asphalt surface. Fixed contamination remaining following decontamination resulted in a contact dose of about 0.05 mR/hr.
9/18/63 Incident Report No. 63-12	A sampling valve located over the Ion Exchange Pit was inadvertently left open when filling the Shield Tank Cavity from the Safety Injection Tank. Water from the tank spilled onto the cover of the Ion Exchange Pit. A portion of the water drained from the cover onto the asphalt on the west side of the Ion Exchange Pit.	Radiation levels of the spill area were 70-100 mR/hr measured 1 inch from the surface. Ion Exchange Pit cover contamination levels were 1,000,000-10,000,000 dpm measured over several square inches. Asphalt contamination levels were 20,000-60,000 dpm/ft^2. Both the Ion Exchange Pit cover and the asphalt were decontaminated.
10/8/63 Incident Report No. 63-17	Several small holes were detected on the bottom of a leakage collection drum located in a storm drain catch basin outside of the Spent Fuel Building. The drum was used to collect leakage from the Fuel Transfer Chute Dewatering Pump.	Water with a radioactivity level of about 6E-5 μCi/ml leaked from the drum into the catch basin. The basin was pumped to the Waste Disposal System and flushed with Service Water.

Date	Description of Occurrence	Radiological Consequences
9/3/64 Incident Report No. 64-8	A spill of main coolant occurred while filling and pressurizing the shutdown cooling pump gland seal water tank. Main coolant flowed out the vent connection into a relief valve discharge header and onto the Primary Auxiliary Building roof.	About 270 μCi of radioactivity was released as a result of the spill. Several samples were taken: Seal tank drain 2E-3 μCi/ml PAB roof 1E-3 μCi/ml Storm drain1 E-6 μCi/ml Predominant isotopes were Co-58, Co-60 and Mn-54. The area was decontaminated. Several years after the event, a new roof was installed and the old roofing material was disposed of as radioactive material.
10/3/64 AOR No. 64-13	A valve was inadvertently left open after adding water to the Ion Exchange Pit. Water continued to flow into the Ion Exchange Pit from the Primary Water Storage Tank. Water leaked from the Ion Exchange Pit into the ground resulting in water coming up through the asphalt on the west side of the pit.	Leakage from the Ion Exchange Pit contaminated the ground and asphalt on the west side of the Ion Exchange Pit. The water had a specific activity of 8E-8 μCi/ml and was below the maximum permissible concentration. The area was flushed with service water to dilute the contamination as it entered the storm sewer.
2/17/65 AOR No. 65-6	A routine chemistry sample of Ion Exchange Pit water indicated an activity level of 1.2E-5 μCi/ml. This was about 100 times above the normal level. The cause was identified as a leaking outlet connection on a cation bed that was in main coolant service. The activity decreased by about 50% within a day after isolating the leak. The connection was installed 19 days before the leak was identified.	Analysis indicated that the activity was comprised primarily of F-18 (half life = 1.8 hr) and an unknown isotope with a gamma energy of 0.14 MeV (half life = 40 hr). Based on an existing leak from the Ion Exchange Pit to the soil, about 3,400 μCi in 74,000 gallons of water was released to the area beneath the Ion Exchange Pit over the 19-day period.

Date	Description of Occurrence	Radiological Consequences
3/25/65 AOR No. 65-8	A sample of Ion Exchange Pit water indicated a high activity level, 2E-4 μCi/ml. The cause was identified as a leak from an anion exchange capsule and filter that were installed the previous day. Main Coolant System purification flow was stopped and all capsules were isolated.	Main coolant leaked into the Ion Exchange Pit, increasing the radioactivity level. After the leak was isolated, a feed and bleed dilution of the Ion Exchange Pit was established. About 88,000 gallons of demineralized water was added to the Ion Exchange Pit.
5/64 – 5/65 Operation Reports Nos. 42-53	Significant Ion Exchange Pit leakage was identified in May 1964. An unsuccessful attempt to isolate the leak was made in July 1964 by installing and sealing a concrete plug in the pit sump. Following that attempt, a decision was made to empty the resin capsules and to drain the pit. This activity was completed in April 1965. In May 1965, a crack in a vertical joint at the northwest corner of the Ion Exchange Pit was found after draining the pit. The crack was repaired and the Ion Exchange Pit floor and walls were sealed to prevent further leakage. In 1965, tritium was detected in Sherman Spring. The presence of tritium was attributed to migration of tritium from the Ion Exchange Pit into the groundwater. Section 3.1.5 presents additional information regarding the activity in Sherman Spring.	Water from the Ion Exchange Pit leaked into the soil below the pit during the period between May 1964 and April 1965. The average activity during this period was 7E-6 μCi/ml resulting in a total release of about 36,000 μCi of identifiable activity. Greater than 95% of this activity was due to Cr-51, Mn-54, Fe-59, Co-58, Co-60, Ag-110m, and Hf-181. Based on the average activity and the lowest maximum permissible concentration, the release from the Ion Exchange Pit was less than 12% of the maximum permissible concentration for unrestricted areas. Based on soil characteristics it is unlikely that this activity migrated to an unrestricted area. The amount of tritium attributed to this leakage has been estimated to be less than 200 Ci (Reference 306-11).
4/8/66 AOR No. 66-3	Main coolant was inadvertently aspirated into the Primary Vent Stack fan from the Low Pressure Vent Header during outage related Reactor Vessel venting operations. Main coolant leaked from the riveted joints in the fan duct work onto the Primary Auxiliary Building Mechanical Equipment Room floor.	Main coolant was spilled with a radioactivity level of 2.26 μCi/ml tritium and 3.4E-2 μCi/ml gross beta-gamma. Smears of the affected area indicated 100,000-1,000,000 dpm/ft^2. A survey of the vent line and the duct work indicated contact radiation levels of 10-70 mR/hr on horizontal runs and 10-25 mR/hr on vertical runs. The area was decontaminated.

Date	Description of Occurrence	Radiological Consequences
9/27/66 AOR No. 66-7	The Spent Fuel Pit overflowed when a Primary Water Storage Tank valve was inadvertently left open. Most of the water flowed from the building, down the north exterior wall, over a small section of asphalt paving and into a storm drain. A few gallons leaked into the New Fuel Vault.	A sample of the water that overflowed from the Spent Fuel Pit indicated 3.2E-5 μCi/ml gross activity and 5.4E-3 μCi/ml tritium. This occurrence resulted in a total release of 4 μCi gross beta-gamma activity and 670 μCi of tritium. Affected areas were decontaminated, the storm drain was flushed with about 75,000 gallons of service water.
9/27/66 AOR No. 66-8	A sample of the west side storm drain culverts indicated elevated activity levels. This culvert was not affected by the Spent Fuel Pit spill. The source of activity was traced to a leak from the Safety Injection Tank heating system safety valve located in the Primary Auxiliary Building. Floor drains in this section of the building discharge to a storm drain on the south side of the building which discharge into the west culvert.	Samples collected from the west side culvert indicated 6.7E-7 μCi/ml average gross beta-gamma activity. The Safety Injection Tank water analysis indicated 3E-5 μCi/ml gross beta-gamma activity and 1.1E-1 μCi/ml tritium. About 0.8 μCi gross beta-gamma activity and 3.32 millicuries of tritium were released into the west culvert. Affected surface areas were decontaminated.
11/1/66 AOR No. 66-9	A temporary hose failed during a routine drainage operation on the Fuel Transfer Chute pump discharge line. The spilled water drained into a storm drain served by the east culvert.	The spilled liquid had an activity of 3E-3 μCi/ml, resulting in a release of about 113 μCi into the storm drain. The storm drain was flushed with about 250 gallons of water.
2/18/72 AOR No. 72-3	Moisture was detected under insulation on the Test Tank level indicator. A leak developed from the indicator to the ground at the base of the tank coincident with the discovery. The leak was contained within 15 minutes of discovery.	The leakage from the tank had a radioactivity content of 0.0004 μCi beta-gamma and 2,017 μCi tritium. About 4 ft^3 of crushed stone and soil at the base of the tank was removed for disposal. Analysis of the soil following removal indicated no radioactivity above background levels.

Date	Description of Occurrence	Radiological Consequences
7/16/75 PIR No. 75-7	While walking near the Ion Exchange Pit a technician received an alarm on a portable radiation detection monitor. Upon investigation, an area of bare soil with radioactive contamination of about 500,000 dpm was detected. Contamination appeared to be limited to several square feet of soil with most of the activity limited to an area of about 1 ft^2. A complete surface survey within the plant protected area fence was initiated using RM-14 radiation detectors with HP-210 probes held approximately 1 inch off the ground. Fourteen additional areas of contamination were identified. Ten of the fourteen areas were located on the nonradiological side of the plant.	Several sources of contamination were identified: 1) single specks of radioactive material, 2) soil contaminated with relatively low activity to a depth of several inches, and 3) pieces of contaminated materials (e.g., wood, concrete, polyethylene) on top of the ground. Low levels of radioactivity were also detected in the normal rain water runoff paths. Analyses of several soil samples indicated that the radionuclides consisted of nuclides with half-lives greater than one year (predominately Co-60). The contamination most likely was deposited several years prior to detection. Contaminated soil and debris were removed, including soil at the bottom of the storm drain catch basins. Any remaining soil contaminated with residual, low level radioactivity was sprayed with an asphalt sealer and covered with a thin layer of soil. Paved areas were swept and sealed with an asphalt sealer.
8/10/77 PIR No. 77-10	Routine analysis of the laboratory demineralized water supply indicated the presence of tritium. The cause was inferred to be a valve line-up error that allowed main coolant to flow into the demineralized water header.	Contaminated water was detected in the Demineralized Water Storage Tank and the Auxiliary Boiler Condensate Tank. The estimated activity released to the secondary plant was 4,000 μCi tritium and 75 μCi nonvolatile activity. The Demineralized Water Storage Tank was discharged as a permitted release and refilled with clean water. Normal boiler drum blowdown reduced the radioactivity to undetectable levels.

Date	Description of Occurrence	Radiological Consequences
12/21/77 PIR No. 77-16	A pipe from the Service Building sump to the Gravity Drain Tank was severed during core boring activities. The sump tanks receive water from the Radiation Control Area sinks, chemistry laboratory, and machine shop drains. A mechanical float-switch assembly starts and stops the pump which transfers liquid from the sump tank to the gravity drain tank. Water was released from the system before the pump could be secured.	The contaminated water released the following radioactivity into the soil: I-131 16.50 μCi I-133 2.76 μCi Cs-134 0.34 μCi Cs-137 0.50 μCi Co-60 0.58 μCi The soil at the location of the rupture was removed and disposed of.
10/24/79 PIR No. 79-4	Routine analysis of the auxiliary plant systems indicated the presence of tritium. The cause was inferred to be valve leakage between the Test Tank transfer pumps and the Primary Water Storage Tank. Water was transferred to the Auxiliary Boiler Condensate Tank, and the Demineralized Water Storage Tank during normal make-up operations.	The radioactivity level of water in the demineralized water header was very low: 5E-5 - 3E-4 μCi/ml tritium and 1E-8 - 1E-7 μCi/ml Cs-134, Cs-137, Co-60, Mn-54 activity.
8/6/80 PIR No. 80-9	Several gallons of contaminated water and about one quart of resin were released through a pinhole leak in a hose while transferring spent resin from the Ion Exchange Pit into a shipping cask.	Resin contact radiation levels were less than 1 mR/hr and spilled liquid readings were about 300,000 dpm/100 cm^2. The spill area was decontaminated to remove contamination, including excavation of some asphalt.
5/15/81 PIR No. 81-9	The reactor vessel head was bumped against the side of the equipment hatch during removal from the Vapor Container. Contaminated material from the underside of the head was released and fell to the asphalt below the equipment hatch.	General contamination levels on the asphalt below the equipment hatch were 1,000-500,000 dpm/100 cm^2. An area about 30 ft by 50 ft was contaminated with a total activity of about 250 μCi. About 10 μCi was discharged to Sherman Pond when rain washed the radioactive material into the east storm drain before the area could be decontaminated.

Date	Description of Occurrence	Radiological Consequences
9/10/84 PIR No. 84-16	A failed PVC drain line from the Waste Disposal Building was discovered during soil excavation activities. The drain line had six pipe joints, each of which leaked apparently due to failure of the solvent welds.	Soil below one of the pipe joints was significantly contaminated. Analysis indicated 50,000 dpm over the area of maximum contamination. One "hot spot" contained 29,300 pCi/g Co-60. Average Co-60 activity, measured 2 feet below the pipe joint was about 2,100 pCi/g. Average Cs-137 activity at this location was about 17 times less than the average Co-60 activity. Soil under all pipe joints was removed to a depth of 5-7 feet below plant grade. About 420 cubic feet of soil and rock were removed and disposed of as radioactive waste. All areas above the excavation were sealed under a concrete cap.
12/14/91 PIR No. 91-7	Analysis of the laboratory demineralized water supply, the Demineralized Water Storage Tank, and the Auxiliary Boiler Condensate Tank indicated the presence of tritium and boron. No activity was found in the Primary Water Storage Tank. The root cause of the event could not be determined.	About 840 μCi of tritium was leaked into the demineralized water supply. Water was discharged from the Demineralized Water Storage Tank as a permitted release and the demineralized water header was flushed.

307 FINAL RADIOLOGICAL SURVEY – SITE RELEASE CRITERIA

This information has been extracted, updated and relocated to the PSDAR within the FSAR.

400 TRANSIENTS

400.1 General Overview

This section presents an accident analysis that assesses the impact of decommissioning on both occupational and public health and safety. A structured, comprehensive process was used to identify and evaluate events that could occur during the period from approval of the Decommissioning Plan through completion of the final radiation surveys (Reference 400-1). The accident analysis considered: (1) decommissioning activity events, (2) loss of support system events, (3) fire events, (4) explosion events, (5) external events and (6) spent fuel storage events. Analysis of decommissioning events included all phases of decommissioning activities: decontamination, dismantlement, packaging, storage and radioactive materials handling.

The risk of accidents resulting in a significant radiological release during decommissioning activities is considerably less than that during plant operations. YAEC evaluated all of the Final Safety Analysis Report Section 400 safety analyses for applicability to a permanently defueled condition (Reference 400-2). With the completion of fuel transfer from the SFP to the YNPS ISFSI, the SFP fuel handling accident is no longer a credible event. The remaining events which could occur in a permanently defueled condition and impact the health and safety of the public are related to the release of airborne radioactive materials during decommissioning activities. Most of the demolition activities are now complete and not a concern as well. For historic purposes, the remaining events have been retained in the YNPS FSAR until all of the decommissioning activities are complete later in 2005. The retention of these events is conservative. After the decommissioning and demolition is complete, at the next update, a revision will remove the remaining accidents and transient conditions.

400.1.1 Radionuclide Release Limits

Prior to the decision to permanently cease power operations, radiological releases resulting from design basis accidents postulated in evaluations and the Final Safety Analysis Report were evaluated using dose reference values from 10CFR Part 100. The 10CFR Part 100 reference values limit dose to an individual at the Exclusion Area Boundary during the first two hours following the onset of a postulated fission product release. The dose limits are less than 25 rem total dose to the whole body and less than 300 rem thyroid dose from radioactive iodine.

Since the decision to permanently cease power operations, YAEC requested and received an exemption from the emergency preparedness requirements of 10CFR50.54(q) (Reference 400-3). This exemption allowed YAEC to discontinue off-site emergency response activities and to refocus the scope of on-site response capability. NRC approval of the exemption was predicated on the absence of accidents at a level of severity where the off-site dose could exceed the Environmental Protection Agency (EPA) Protective Action Guides (PAGs). Off-site protective actions are not warranted if the off-site dose following a postulated accident is less than the EPA PAGs.

The EPA PAGs are limiting values based on the sum of the effective dose equivalent resulting from exposure to external sources and from the committed effective dose equivalent incurred from all significant inhalation pathways during the early phase of an event (Reference 400-4):

	EPA PAGs, rem
Whole Body	1
Thyroid	5
Skin	50

Releases resulting from accidents postulated in the decommissioning accident analysis were evaluated using the EPA PAGs as an upper limit. This ensures that the current ISFSI Emergency Plan remains adequate for decommissioning and eliminates the need to reinstitute an off-site emergency response capability. Use of the EPA PAGs as an administrative limit also ensures that postulated accident off-site doses are significantly less than the 10CFR Part 100 reference values.

400.1.2 Assumptions

The following assumptions have been incorporated into the accident analysis:

- Special Nuclear Material used as reactor fuel will not be moved into the Reactor Vessel. This a condition of the YNPS possession only license.

- The airborne pathway is the dominant radioactivity release pathway. Activities that could result in release of radioactive liquids will be designed to contain the releases within the liquid waste processing system using existing or supplemental barriers.

- Airborne releases are assumed to occur at ground level with a conservative dispersion factor of 2.84E-04 sec/m^3 (Reference 400-5).

- Direct failures and consequences of initiating events were considered in the consequence analyses. Separate, coincident, random failures were not considered.

- Decommissioning activities are independent from each other. There are no credible common cause mechanisms that could result in the simultaneous release of radioactivity from multiple activities that would exceed the equivalent release of the radioactive contents of the single, bounding container or component that results in the highest off-site dose. Interactions between systems during radioactive materials handling activities will be precluded by the maintenance of safe load paths; protective zones around limiting systems, structures and components; and single handling criteria for higher contamination items. The consequences of fire and explosions may impact several activities simultaneously. These events are considered separately in Sections 405 and 406.

- Decommissioning activities may be performed in the Vapor Container without isolating the Vapor Container from the environment. The release of all of the surface contamination remaining in the Vapor Container will not exceed the doses predicted for the Material Handling Event.

400.2 Event Identification Process

A structured, comprehensive process was used to identify accident initiating events which could lead to radionuclide releases during the YNPS decommissioning (Reference 400-1). The process included development of a logic diagram to evaluate all phases of decontamination, dismantlement and fuel management activities, as well as to identify nonradiological events.

Accident initiating events were grouped by structures, systems and components within a plant area. The accident initiating events were compared using previous YNPS accident analyses, as well as current evaluations and calculations to identify the dominant accident initiating events within each plant area and then among plant areas. Accident scenarios were developed for these dominant accident initiating events. The scenarios formed the bases and inputs for radiological dose calculations to determine the impact on the health and safety of the public. Most of the systems and components that were used in the accident scenarios have now been removed from the plant. The event descriptions remain in the FSAR as bounding accidents for the ongoing decommissioning.

The following events were considered in the accident analysis and are presented below:

- Events affecting occupational health and safety, including radiological and nonradiological events.
- Off-site events affecting public health and safety.
- Nonradiological events affecting public health and safety.
- Radiological events affecting public health and safety, including the following:
  - Decommissioning activity events, including decontamination, dismantlement, packaging, storage and materials handling.
  - Loss of support system events, including loss of off-site power, cooling water and compressed air.
  - Fire and explosion events.
  - External events.
  - Spent fuel storage events, including fuel handling event, loss of spent fuel cooling capability, and interactions between spent fuel and decommissioning activities.

400.3 Summary

The accident analysis assessed the impact of decommissioning on both occupational and public health and safety by considering decommissioning and fuel storage events. The evaluation of events that could affect occupational health and safety indicated that implementation of the Radiation Protection, Occupational Safety Programs and ISFSI Emergency Plan ensures that these events are sufficiently minimized. Analysis of events that could affect public health and safety indicated that there were no events that could significantly affect public health and safety.

Table 400.1 provides dose conversion factors for several radionuclide mixes (Reference 400-8). The dose conversion factors are in units of rem per curie released to the atmosphere. They apply at the Exclusion Area Boundary and were determined as of January 1994. Table 400.2 provides a summary of the radioactivity content of several systems as of the same January, 1994 date.

Due to radioactive decay, the dose conversion factors for representative radionuclide mixes will change with time. A bounding set of dose conversion factors had been calculated that was applicable until the date 1/1/2005 (Reference 400-18). These were determined by decaying several radionuclide mixes until that date and using the most limiting result. The bounding set of dose conversion factors in Table 400.1 has been updated and is now applicable until the date 1/1/2008. The update was based on applying the results of a conservative calculation which decay corrected the most limiting radionuclide mix to maintain a TEDE of 320 mrem at the Exclusion Area Boundary (Reference 400-25). The ratio of the previous to the currently calculated limiting radionuclide release limit (4.35 Ci / 3.84 Ci) was used to conservatively increase the boundary set of dose conversion factors in Table 400.1.

The analyses identified requirements that must be implemented during decommissioning to ensure that the accident analysis basis is maintained. Table 400.3 summarizes these items. The analyses also present planning considerations that reduce the probability of occurrence or consequences of the events that were evaluated. Table 400.4 also summarizes these items.

REFERENCES

400-1 YRP 437/93, Decommissioning Safety Analysis, September 28, 1993.

400-2 BYR 92-057, Request for Exemption From Annual and Biennial Emergency Preparedness Exercise in 1992, S. P. Schultz to M. B. Fairtile (USNRC), May 22, 1992.

400-3 NYR 92-178, Exemption From The Emergency Preparedness Rule 10CFR50.54(q) and Approval of The Defueled Emergency Plan at the Yankee Nuclear Power Station (TAC No. M83991), M. B. Fairtile (USNRC) to J. M. Grant, October 30, 1992.

400-4 EPA 400-R-92-001, Manual of Protective Action Guides and Protective Actions for Nuclear Incidents, US Environmental Protection Agency, October 1991.

400-5 YRC-182, Yankee Rowe Accident Atmospheric Diffusion Factors, January 5, 1982.

400-6 YRC-1024, Basis for the Radiological Status of Plant Systems and Structures, September 1993.

400-7 ELISA - Technical Description, A Computer Code for the Radiological Evaluation of Licensing and Severe Accidents at Light-Water Nuclear Power Plants, J. N. Hamawi, April 1991.

400-8 YRC-1014 Revision 1, Decommissioning Accident Source Terms.

400-9 Deleted.

400-10 ESG 90/93, Flammable Gas Explosion Evaluation For Decommissioning Safety Analysis, G. A. Harper to R. A. Mellor, August 20, 1993.

400-11 NUREG/CR-2300, PRA Procedures Guide, January 1983.

400-12 NYR 92-144, Exemption From 10CFR Part 50 - Appendix E - Emergency Preparedness Training Exercises at the Yankee Nuclear Power Station (TAC No. M83415), M. B. Fairtile (USNRC) to J. M. Grant, July 24, 1992.

400-13 Deleted.

400-14 NUREG/CR-130, Technology, Safety, and Costs of Decommissioning a Reference Pressurized Water Reactor Power Station, Battelle Pacific Northwest Laboratory, June 1978.

400-15 YAEC-1711, Yankee Nuclear Power Station Severe Accident Closure Submittal, December 21, 1989.

400-16 NUREG-0825, Integrated Plant Safety Assessment Systematic Evaluation Program, Yankee Nuclear Power Station, June 1983.YRC-1125, Propane Evaluation for Temporary Waste Disposal System, May 16, 1996.

400-17 EDC 96-305, "Yard Area Crane Upgrades."

400-18 YRC-1238, DBA Curie Limits, November 17, 2000

400-19 CH-03-0014, Estimate of Total Radioactivity Remaining in the Vapor Container, and the Off-Site Dose Impact Assuming all of this Activity is Released to the Exclusion Area Boundary, D.A. Montt to G. Babineau, May 15, 2003.

400-20 EDC 99-302, Independent Spent Fuel Storage Installation (ISFSI) Facility Design and Construction.

400-21 NUREG 1536, Standard Review Plan for Dry Cask Storage Systems, January 1997.

400-22 NAC-MPC, Final Safety Analysis Report, Multi-Purpose Canister System, Docket No. 72-1025.

400-23 EDC 01-001, Implementation of YR Dry Fuel Storage Using the NAC-MPC System.

400-24 ENG 05-11, Thermal Desorption System – Hypothetical Propane Explosion Evaluation, G.H. Philley/B.W. Holmgren to F.N. Williams, May 26, 2005.

400-25 YA-CALC-00-002-05, FSAR Calculation, June 2005

TABLE 400.1

Exclusion Area Boundary Dose per Curie Conversion Factors

	Dose Conversion Factors, rem/Ci		
	TEDE	Thyroid	Skin
Contamination:			
MCS and Bleed Line in VC	3.9E-02	1.6E-03	9.7E-05
Remaining Systems and Structures	2.7E-02	8.8E-04	5.6E-05
Activation:			
Bioshield Concrete	2.2E-03	4.6E-04	2.8E-05
Vessel Cladding	1.1E-02	3.2E-03	1.8E-04
Vessel Wall	2.4E-03	7.0E-04	3.9E-05
Bounding Dose Conversion Factors	8.33E-02	1.21E-03	6.51E-05

NOTES:

1. TEDE is total effective dose equivalent.
2. Activation results are based on the average value in the core region.
3. The Main Coolant System (MCS), Bleed Line in the Vapor Container (VC), Reactor Vessel, and the Bioshield Concrete have been permanently removed.
4. As the radioactive source term on site decays, there are changes in the radionuclide mix available for potential release during an event. As a result of this changing mix, the dose conversion factors must be periodically updated. The Bounding Dose Conversion Factors reported in the table are the limiting values through 1/1/08.

TABLE 400.2

Summary of Materials Released in Postulated Events

Item	Radioactivity Content	Source of Radioactivity
Main Coolant System:		
Piping (1 Loop)	11 Ci	Internal Contamination
Valves (1 Loop)	1.2 Ci	Internal Contamination
Pumps (1 Pump)	3.0 Ci	Internal Contamination
Charging & Volume Control System:		
Bleed Line Piping (Total in VC)	4.6 Ci	Internal Contamination
Feed & Bleed Heat Exchanger (1 Shell)	9.5 Ci	Internal Contamination
Reactor Vessel:		
Intact Removal (Internal Contamination)	23 Ci	Internal Contamination
Segmented Removal (Cutting Debris)	120 Ci	Activated Metal
Radioactive Materials Container:		
Main Coolant System Piping Container	2.9 Ci	Internal Contamination
Reactor Vessel Segment Cask	2.3 Ci	Internal Contamination
Sea-Land Container with Combustible Material	2.9 Ci	Internal Contamination

NOTES:

1. Radioactivity content is based on January 1994.

2. The Main Coolant System, Charging & Volume Control System and Reactor Vessel have been permanently removed.

TABLE 400.3

Summary of Safety Analysis Requirements

Accident Analysis Section	Analysis Requirement
400.1.2	Special Nuclear Material used as reactor fuel will not be moved into the Reactor Vessel. Refer to Note 1.
400.1.2	Deleted
403.1	Detailed planning of activities that use liquids will ensure liquids will be processed by a liquid waste processing system when required by the ODCM. Existing or supplemental barriers will be used to ensure that inadvertent spills are contained within the liquid waste processing system.
403.1 403.3 407.7	The following will be performed if the Reactor Vessel is removed as a single component: • Internal Dross will be consolidated to stabilize contamination. • Limitations will be placed on the Reactor Vessel cask transporter operation to ensure that Spent Fuel Pit structural integrity is not adversely affected. Refer to Note 1.
403.4 406.2 407.7	Radioactive materials storage areas will be located and arranged such that multiple containers or components will not be significantly affected by a fire event causing a release of airborne radioactivity exceeding the bounding materials handling event.
403.5 407.7	The following components will be handled and transported on-site as single containers or components to reduce the consequences of a materials handling event: Reactor Vessel Casks; Main Coolant System Piping Containers, Valve Containers, and Pumps; Feed and Bleed Heat Exchanger Shells; Bleed Line Piping Containers. Refer to Note 1.
406	Explosives will not be used at YNPS without completion of a separate safety analysis. The analysis must include the effects of the use of explosives both on the Spent Fuel Pit Building and Fuel Transfer Chute structural integrity and on the potential release of airborne radioactivity. Refer to Note 1.
406.1	The quantity of inflammable gases stored on-site will be limited as follows: • The Vapor Container and Potentially Contaminated Area Warehouse will not be used as a general storage location for inflammable gas cylinders. Only cylinders in use or required in the near term should be located inside the structures at any given time. Refer to Note 1.

TABLE 400.3
(Continued)

Summary of Safety Analysis Requirements

Accident Analysis Section	Analysis Requirement
408	All fuel has been transferred to the ISFSI. The NAC-MPC FSAR contains the design basis safety analysis for the NAC-MPC system components in use at the Yankee-Rowe ISFSI.
408.1	Deleted
408.2	Deleted
408.3	Deleted

NOTE:

1. The Main Coolant System, Charging & Volume Control System, Reactor Vessel, Spent Fuel Pit Building, Fuel Transfer Chute, and Vapor Container have been permanently removed. This safety analysis requirement is no longer applicable to the YNPS.

TABLE 400.4

Summary of Decommissioning Planning Considerations from the Safety Analysis

Accident Analysis Section	Decommissioning Planning Considerations
401.1	The Radiation Protection Program will be applied to all activities performed on site involving radioactive materials: • Activities will be managed by qualified individuals who will implement program requirements in accordance with established procedures. • Radiation exposures and the release of radioactive materials to unrestricted areas will be maintained as far below specified limits as is reasonably achievable. • Radiation protection training will be provided to all occupationally exposed individuals.
401.1	Project management will ensure that work specifications, designs, and work packages involving radiation exposure or radioactive materials incorporate effective radiological controls.
401.2	The Occupational Safety Program will be implemented during YNPS decommissioning.
402.2	Hazardous materials handling will be controlled through the Nonradioactive Hazardous Materials Program and the Chemical Control Program.
402.2	Safe storage and use of inflammable gases and any other inflammable materials will be controlled through the Occupational Safety Program and the Fire Protection Program.
403.1 403.3 407.7	The following will be performed if the Reactor Vessel is removed as a single component: • A local HEPA filtration unit will be used as necessary to remove airborne radioactivity. • A lifting fixture/cover and nozzle covers will be installed to provide additional barriers to the release of radioactivity. Refer to Note 1.
403.2	Detailed planning will ensure that the following systems with high internal contamination will be dismantled using mechanical methods: Main Coolant System, Feed and Bleed Heat Exchanger, Bleed Line Piping. Refer to Note 1.

Accident Analysis Section	Decommissioning Planning Considerations
403.2	The following will be performed if the Reactor Vessel is segmented: • Mechanical cutting methods will be implemented to cut the Reactor Vessel. • Cutting of the Reactor Vessel beltline area will be conducted under water. A local HEPA filtration unit will be used to remove airborne radioactivity. Refer to Note 1.
403.5	Openings in components will be covered and sealed to minimize the spread of contamination after dismantlement and before on-site transportation.
404.1	Deleted
404.2	If service water is not available to the Vapor Container fire hose reels, an alternate source of water will be re-established in accordance with the Fire Protection Plan. Refer to Note 1.
404.3	Deleted
405	The following fire protection features will be maintained through implementation of the Fire Protection Program: • Fire detection equipment and systems • Fire barrier maintenance and control • Personnel training and qualification programs • Fire Protection Program procedures • Control of transient combustible materials and ignition sources
407.2	The impact of seismic events will be evaluated during planning of dismantlement activities. The evaluation will consider the possibility of the spread of contamination.

NOTE:

1. The Main Coolant System, Charging & Volume Control System, Reactor Vessel, and Vapor Container have been permanently removed. This decommissioning planning consideration is no longer applicable to the YNPS.

401 EVENTS AFFECTING OCCUPATIONAL HEALTH AND SAFETY

401.1 Radiological Events

Radiological events could occur which result in increased exposure of decommissioning workers to radiation. However, the occurrences of these events are minimized or the consequences are mitigated through the implementation of the Radiation Protection Program (Section 507) and the Defueled Emergency Plan (Section 515).

The Radiation Protection Program is applied to all activities performed on site involving radioactive materials. The primary objective of the Radiation Protection Program is to protect workers and visitors to the site from radiological hazards that have the potential to develop during decommissioning. The program requires YNPS and its contractors to provide sufficient qualified staff, facilities and equipment to perform decommissioning in a radiologically safe manner.

Activities conducted during decommissioning that have the potential for exposure of personnel to either radiation or radioactive materials will be managed by qualified individuals who will implement program requirements in accordance with established procedures. Radiological hazards will be monitored and evaluated on a routine basis to maintain radiation exposures and the release of radioactive materials to unrestricted areas as far below specified limits as is reasonably achievable. Radiation protection training will be provided to all occupationally exposed individuals to ensure that they understand and accept the responsibility to follow procedures and to maintain their individual radiation dose as low as is reasonably achievable.

Project management will ensure that work specifications, designs and work packages involving potential radiation exposure or handling of radioactive materials incorporate effective radiological controls. Task planning will include consideration of the potential adverse events. The objective of this planning is to ensure that protective measures and contingency plans are developed to address the potential occurrence of these events and to minimize their impact on the workers as well as the public health and safety.

The ISFSI Emergency Plan retains an on-site emergency response capability. This capability includes removal of personnel from an affected area, including site evacuation, if necessary. The plan is implemented by the control room personnel.

Implementation of these programs ensures that potential radiological events affecting occupational health and safety will be sufficiently minimized and mitigated to not warrant further consideration in this analysis.

401.2 Nonradiological Events

Decommissioning YNPS may require different work activities than were typically conducted during normal plant operations. Effective implementation of the Occupational Safety Program (Section 510) to decommissioning activities will ensure worker safety. The goal of the Occupational Safety Program is to provide a hazard-free environment for employees. The program incorporates safety into every phase of decommissioning from early design through implementation.

Implementation of the Occupational Safety Program will ensure that industrial safety events are eliminated to the maximum extent possible.

402 EVENTS AFFECTING PUBLIC HEALTH AND SAFETY

402.1 Off-Site Radiological Events

The Decommissioning Environmental Report that was prepared to support the YNPS Decommissioning Plan presented the impact of decommissioning on the public and the environs. Off-site events related to decommissioning activities are limited to those associated with the shipment of radioactive materials. Radioactive shipments will be made in accordance with all applicable requirements (e.g., NRC, Department of Transportation). The Radioactive Waste Management Program (Section 508) and the Decommissioning Quality Assurance Program (Section 514) assure compliance with these requirements.

Compliance with these requirements ensures that both the probability of occurrence and the consequences of an off-site event do not significantly affect the public health and safety.

402.2 Nonradiological Events

There are no decommissioning events that can be initiated from nonradiological sources that could significantly impact public health and safety.

Hazardous materials handling will be controlled through the Nonradioactive Hazardous Materials Program and the Chemical Control Program (Section 511). There are no chemicals stored on-site that, after release, could significantly threaten public health and safety. Inflammable gases stored on-site include combustible gases used for cutting and welding and liquid propane gas (LPG) used for operation of forklift trucks and evaporator. Safe storage and use of these gases and any other inflammable materials is controlled through the Occupational Safety Program and Fire Protection Program (Section 510 and 513).

The programs described above are implemented through procedures that control material identification, inventory, handling, storage, use and disposal, minimizing the probability of on-site nonradiological events. In addition, procedures present mitigative measures that would be implemented if an event occurred.

Implementation of these programs ensures that the probability of occurrence and consequence of on-site nonradiological events do not significantly affect public health and safety.

402.3 Radiological Events

There are no radiological events that could affect the health and safety of the public such that it results in a release of radioactive materials exceeding the EPA PAGs. Radiological events are divided into several categories: (1) decommissioning activity events, (2) loss of support system events, (3) fire events, (4) explosion events, (5) external events and (6) spent fuel storage events. Sections 403 through 408 present the dominant radiological events.

402.4 Radiological Analysis Basis

The consequences of postulated decommissioning accident scenarios on the health and safety of the public were determined by calculating the potential dose at the Exclusion Area Boundary. The

location of the Exclusion Area Boundary is presented in Figure 300-1 as a point 3100 ft from the center of the Vapor Container. The airborne release is assumed to result from release of the entire potential airborne radioactivity in a container or component. Releases to the environment are assumed to be at ground level. Activities that could result in release of radioactive liquids will be designed to contain the releases within the liquid waste processing system using existing or supplemental barriers.

An atmospheric dispersion factor of 2.84E-04 sec/m3 (Reference 400-5) was used to estimate the two hour dose at the Exclusion Area Boundary resulting from a ground level release of radioactivity. The radionuclide distributions used to evaluate postulated releases are estimated from the radiological scoping survey data. Radionuclide distributions, contamination levels, and radioactivity contents are calculated as of January 1, 1994. An updated calculation has been performed due to radioactive decay and changes in radionuclide distribution over time. This update is discussed in Section 400.

The ELISA computer program (Reference 400-7) was used to calculate the Exclusion Area Boundary doses relative to the radioactivity released (Reference 400-8). The following doses were calculated: total effective dose equivalent, thyroid dose, and skin dose. In each case, the total effective dose equivalent was the limiting value. Table 400.1 presents the dose to radioactivity conversion factors used in the analysis.

The off-site dose was determined based on the airborne radioactivity released in each accident scenario. Most of the calculations for the dominant scenarios used the highest dose to radioactivity conversion factors, which were based on the Main Coolant System and Bleed Line radionuclide distribution. Doses estimated for activated components were based on a combined release of loose activated base material (e.g., fine cutting debris, concrete dust) and surface contamination. Table 400.2 presents a summary of the materials that were assumed to be released.

The radiological analysis results in conservative, bounding estimates of the radiological consequences of the events considered in this analysis based on the following:

- The atmospheric dispersion factor was based on conservative meteorology. Realistic meteorology would increase dispersion, decreasing the dose by about a factor of 3 (Reference 400-7).

- The radioactivity release estimates assume that all of the radioactivity released to the environment is incorporated into a plume and is transported to the Exclusion Area Boundary. Only a fraction of the radioactivity released will form a plume and a portion of the plume will drop out prior to reaching the Exclusion Area Boundary, decreasing the dose.

- In most cases, the release fractions from the systems, structures and components were assumed to be 100% of the surface contamination and loose activated base metal. This could only result as a nonmechanistic release of radioactivity following a significant force being applied to the container or component. A significant fraction of the contamination that could be released is tightly bound to the surface. Radiological scoping analysis indicated that this fraction was between 50% to 80% (Reference 400-6). Only a fraction of the total radioactivity would be

released as a result of the energy imparted during an impact on the component or container, if the component or container is breached. More realistic release fractions of 1% to 10% are most likely justifiable. These fractions are consistent with drop, fire, and explosion scenarios in comparable evaluations (Reference 400-14).

Releases resulting from accidents postulated in the decommissioning accident analysis were evaluated against the EPA PAGs. Events producing off-site doses less than the guides were classified as not having a significant effect on the public health and safety.

403 DECOMMISSIONING ACTIVITY EVENTS

Decommissioning activities were identified on a location-by-location basis. Plant areas containing radiologically contaminated and activated systems, structures and components were identified. Dominant systems, structures and components were identified based on the amount of potential airborne radioactivity that could be released during decommissioning activities.

For each of the dominant systems, structures and components in each plant area, five decommissioning process steps were considered: decontamination, dismantlement, packaging, storage and materials handling.

All of the systems that contain significant amounts of surface contamination, and that were evaluated below as decommissioning activity events, have been removed from the site. Therefore, the evaluations below are historical, however, they provide the limiting dose criteria for these categories of events.

403.1 Decontamination Events

Selected systems, structures and components will be decontaminated during decommissioning to remove radioactivity from or stabilize radioactivity on external and internal surfaces. General decontamination methods that may be applied during YNPS decommissioning are presented in Section 200. External contamination levels are significantly lower than the contamination levels on internal surfaces of systems and components. Therefore, the bounding decontamination event is based on decontamination of internal surfaces.

Internal decontamination methods typically use liquids to remove radioactivity from the surface (e.g., chemical decontamination, high pressure water washing). Detailed planning of decommissioning activities that use liquids will ensure that contaminated liquids will be processed by the liquid waste processing system. Additionally, existing or supplemental barriers will be used to ensure that inadvertent spills from these activities will be contained within the liquid waste processing system or an approved alternate. These precautions prevent an unmonitored release of radioactive liquids to the environment.

Based on the evaluation of a gas bottle explosion event in the Vapor Container presented in Section 406, the amount of radioactivity that would be transported from the Vapor Container to the environment following the event was about 10%. The motive forces associated with the release of contamination during a decontamination event are significantly less than those during an explosion. However, an instantaneous release of 10% of the potential airborne radioactivity from the component to the environment was used as a bounding value for the purposes of the calculation.

The estimated radioactivity content of the Reactor Vessel internal surface contamination was about 8 Ci. A release of this material to the environment would result in an off-site dose at the Exclusion Area Boundary of about 0.28 rem. This is significantly less than the EPA PAGs. In addition, radiological scoping analyses indicated that between 50% and 80% of the internal surface contamination is tightly bound. Incorporation of this effect would reduce the dose to less than 0.14 rem.

The radiological consequences of the bounding decontamination event result in a dose at the Exclusion Area Boundary significantly less than the EPA PAGs. Therefore, the public health and safety are not significantly affected by the potential decontamination events that could occur during decommissioning.

403.2 Dismantlement Events

Systems, structures and components will be dismantled during decommissioning to remove radioactive materials from the site. General dismantlement methods that may be applied during YNPS decommissioning are presented in Section 200. Detailed planning will ensure that systems with high internal contamination are dismantled using mechanical methods (e.g., split frame machining). This restriction limits the amount of airborne contamination generated during dismantlement activities. Thermal dismantlement methods (e.g., plasma arc, oxy-fuel) may be used on systems with lower radioactivity levels.

A bounding analysis was completed for the purposes of this accident analysis to estimate the consequences of generating airborne radioactivity during dismantlement activities. The dominant system, structure or component that could have caused the highest off-site dose as a result of a release of airborne radioactivity during dismantlement was one Main Coolant System Loop. The bounding analysis conservatively assumed that all of the radioactivity on the internal surface of one Main Coolant System Loop was nonmechanistically released to the Vapor Container atmosphere. This event is bounding because underwater cutting of the highest radioactivity regions of the Reactor Vessel reduces the potential airborne contamination generation from that source.

Based on the evaluation of a gas bottle explosion event in the Vapor Container presented in Section 406, the amount of radioactivity that would be transported from the Vapor Container to the environment following the event was about 10%. The motive forces associated with the release of contamination during a dismantlement event are significantly less than those during an explosion. However, an instantaneous release of 10% of the potential airborne radioactivity from the Vapor Container to the environment was used as a bounding value for the purposes of the calculation.

The estimated radioactivity content of a Main Coolant System Loop internal surface contamination was about 15 Ci. A release of 10% of this material to the environment would result in an off-site dose at the Exclusion Area Boundary of about 0.051 rem. This is significantly less than the EPA PAGs. In addition, radiological scoping analyses indicated that between 50% and 80% of the internal surface contamination is tightly bound. Incorporation of this effect would reduce the dose to less than 0.026 rem. A nonmechanistic release of the cuttings from segmentation of the upper portion of the Reactor Vessel segmentation would have resulted in an off-site dose of less than 0.013 rem.

The radiological consequences of the bounding dismantlement event result in a dose at the Exclusion Area Boundary significantly less than the EPA PAGs. Therefore, the public health and safety are not significantly affected by the potential dismantlement events that could occur during decommissioning.

403.3 Packaging Events

Radioactive materials are packaged prior to shipment from YNPS to either a disposal facility or an off-site processing facility. Intermediate packaging may also be used prior to transporting radioactive materials from their removal area to a final packaging area. The materials handling event presented in Section 403.5 nonmechanistically assumes that the potential airborne radioactivity in a bounding container or component is released directly to the environment. This event also bounds any packaging event.

The radiological consequences of a packaging event are bounded by the consequences of a materials handling event. Therefore, the public health and safety are not significantly affected by the potential packaging events that could occur during decommissioning.

403.4 Storage Events

Containers and components will be stored on-site prior to shipment to either a disposal facility or an off-site processing facility. Intermediate storage locations may also be used before the radioactive materials are moved to a packaging area. Several evaluations are presented in the accident analysis regarding the storage of radioactive materials:

- Fire Events (Section 405)
- Explosion Events (Section 406)
- External Events (Section 407)

Each of these sections presents restrictions to ensure that adequate separation by barrier, distance or radioactivity content is employed to preclude an event causing a release that exceeds the bounding materials handling event presented in Section 403.5. The materials handling event presented in Section 403.5 nonmechanistically assumes the breach of a single container or component, which releases the total potential airborne radioactivity directly to the environment. Storage areas will be located and arranged such that multiple containers or components could not be affected by a single event causing a release of airborne radioactivity that exceeds the bounding materials handling event.

The radiological consequences of a storage event are bounded by the consequences of a materials handling event. Therefore, the public health and safety are not significantly affected by the potential storage events that could occur during decommissioning.

403.5 Materials Handling Events

Materials handling events encompass those events that could potentially occur during movement of radioactive materials from their removal location to a staging location outside of the structure containing the materials. Subsequent handling of these materials is considered by the on-site transportation external event presented in Section 407.7.

After removal, all openings in components will be covered to minimize the spread of contamination. Components will then either be placed in containers for on-site transportation or be transported individually. The following components containing high potential airborne radioactivity were handled as single containers or components to reduce the consequences of a materials handling

event: Reactor Vessel Casks; Main Coolant System Piping Containers, Valve Containers, and Pumps; Feed and Bleed Heat Exchanger Shells; Vapor Container Bleed Line Piping Containers.

The non-mechanistic release of the contents of the feed and bleed heat exchanger described below (for historical purposes), establishes a bounding dose of 320 mrem TEDE for a materials handling event. The feed and bleed heat exchanger has now been removed from the site. New dose conversion factors have been determined based on limiting radionuclide mixes and are presented in Table 400.1. These bounding dose conversion factors may be used to determine the concentration of radioactivity in a single container that would have the potential to produce 320 mrem at the Exclusion Area Boundary from an accidental release.

A bounding analysis was completed for the purposes of this accident analysis to estimate the consequences of generating airborne radioactivity resulting from a materials handling event. The dominant system, structure or component that could have caused the highest off-site dose as a result of a release of airborne radioactivity during handling was one of the four Feed and Bleed Heat Exchanger shells. The bounding analysis conservatively assumed that all of the radioactivity on the internal surfaces of a Feed and Bleed Heat Exchanger shell was nonmechanistically released to the environment. If the Reactor Vessel is removed as a single component, internal dross will be consolidated to stabilize the contamination. This would significantly reduce the amount of radioactivity that could be released during handling.

The estimated radioactivity content of one Feed and Bleed Heat Exchanger shell internal surface contamination was about 9.5 Ci. A release of this material to the environment would result in an off-site dose at the Exclusion Area Boundary of about 0.320 rem. This is significantly less than the EPA PAGs. In addition, radiological scoping analyses indicated that between 50% and 80% of the internal surface contamination was tightly bound. Incorporation of this effect would have reduced the dose to less than 0.160 rem. The nonmechanistic release assumed that the heat exchanger shell failed catastrophically, releasing radioactivity from all surfaces to the environment. Realistically, the shell is structurally stable and total failure is highly unlikely, further reducing the release of radioactivity.

The following are the potential off-site doses at the Exclusion Area Boundary for the nonmechanistic release of the radioactivity from high radioactivity containers presented above:

Vapor Container Bleed Line Piping	0.160 rem
Main Coolant Pump (1)	0.100 rem
Main Coolant Pipe Container	0.100 rem
Reactor Vessel Segment Cask	0.078 rem
Main Coolant Valve Container	0.041 rem

The radiological consequences of the bounding materials handling event result in a dose at the Exclusion Area Boundary significantly less than the EPA PAGs. Therefore, the public health and safety are not significantly affected by the potential materials handling events that could occur during decommissioning.

404 LOSS OF SUPPORT SYSTEM EVENTS

The electric power, cooling water and compressed air systems provide support to ISFSI operations and decommissioning activities. Loss of these systems could potentially affect many systems and plant areas simultaneously. However, none of these support systems are safety related.

404.1 Loss of Off-Site Power

Off-site power is used to energize tools, cranes, lighting and air filtering equipment used during decommissioning activities. The following results from a loss of off-site power:

- Decommissioning tools, lighting and air filtering equipment are de-energized. All decommissioning activities will be terminated.
- Cranes are de-energized and lifting operations are terminated. Cranes fail in a safe condition when they are de-energized.

Back-up power sources such as UPS and Security Diesel Generator backup power capability will be maintained to support Gatehouse and ISFSI operations, however, back-up power is not needed to support decommissioning activities.

Loss of off-site power will not result in the failure of containment systems designed to preclude the spread of contamination (e.g., local contamination control envelopes, HEPA filters). Although the HEPA filter fans will stop, the filter will remain intact and the contamination control envelope will not be breached, preventing unfiltered releases. A breach of the contamination envelope is an independent event and is not considered in this evaluation. Any significant breach of the contamination envelope would be detected and closed independent of a loss of off-site power.

A loss of off-site power does not result directly in a release of radioactive material to the environment during decommissioning activities. Therefore, public health and safety are not adversely affected by a loss of off-site power event.

404.2 Loss of Cooling Water

Cooling water is supplied by the Auxiliary Service Water System to a heat exchanger which cools the Spent Fuel Pit Cooling System. As a result of the transfer of all spent fuel to the YNPS ISFSI in 2003, spent fuel cooling capability is no longer necessary.

A loss of cooling water does not result directly in a release of radioactive material to the environment during decommissioning activities. Section 408 demonstrates that the public health and safety would not be adversely affected from a loss of spent fuel cooling capability. Therefore, public health and safety are not adversely affected by a loss of cooling water event.

404.3 Loss of Compressed Air

- Compressed air is supplied by various air compressors to operate and power pneumatic tools. Following a loss of compressed air, decommissioning pneumatic tools shut down. This stops any potential releases from these activities.

The radiological consequences of a loss of compressed air event are small and are bounded by the materials handling event presented in Section 403.5. Therefore, public health and safety are not adversely affected by a loss of compressed air event.

405 FIRE EVENTS

A fire event could affect several plant systems, structures and components simultaneously. Combustible materials can be ignited by either external ignition sources (e.g., oxyacetylene torches) or internal ignition sources (e.g., spontaneous combustion). Adequate levels of the following fire protection features will be maintained through implementation of the Fire Protection Program (Section 513) minimizing the potential of occurrence of a fire:

- Fire detection equipment and systems.
- Personnel training and qualification programs.
- Fire Protection Program procedures.
- Control of transient combustible materials and ignition sources.

In addition, if a fire occurs, the following fire protection features will be employed to limit the consequences to those of the decommissioning materials handling event presented in Section 403.5:

- Maintain sufficient fire detection, response and suppression capability.
- Separate containers, as necessary, by distance, barrier or radioactivity content.

Higher radioactivity containers are unlikely to fail and cause a significant release due to a fire as these containers are designed for greater levels of integrity. Spontaneous combustion inside a container is highly unlikely as most containers are filled with noncombustible materials. Sea-land containers may be used to ship combustible radioactive materials. The estimated radioactivity level of a sea-land container filled with combustible radioactive material is about 2.9 Ci. Release of all of the radioactivity as a result of a fire would result in an off-site dose of 0.100 rem at the Exclusion Area Boundary. The assumption of a total release of radioactivity is very conservative. Reference 400-14 presents a release fraction of 0.00015 for a similar event. Incorporation of this assumption would significantly reduce the release.

Implementation of the Fire Protection Program minimizes the probability of occurrence of a fire. Implementation of the restrictions presented above limits radiological consequences at the Exclusion Area Boundary to a value significantly less than the EPA PAGs. Therefore, public health and safety are not adversely affected by a fire event.

406 EXPLOSION EVENTS

An explosion event could affect several plant systems, structures and components simultaneously. Explosions are possible from the following sources:

- Ion Exchange Resin Offgases
- Explosives
- Inflammable Gas Storage Bottles and Tanks

Processing and limitation of ion exchange resin offgases will continue to be controlled by procedures that have successfully precluded this type of accident throughout the greater than 30-year operation of YNPS. Explosives will not be used at YNPS without completion of a separate safety analysis. The analysis must include the effects of the use of explosives and assess the impact on the YNPS ISFSI and associated support systems.

Inflammable gases (e.g., acetylene, LPG) may be used during decommissioning for thermal cutting or to power material handling and processing equipment. Inflammable gas cylinders will be used, located and stored in quantities such that the possibility of explosion is minimized. Two 1,000 gallon propane tanks, were previously located approximately 650 feet from the ISFSI to supply the Temporary Waste Water Processing Island System's gas-fired boiler. Currently six 1,000 gallon propane tanks, located approximately 1180 feet from the ISFSI, supply a thermal desorption system in use to process PCB paint contaminated soils. The quantities of the inflammable gas cylinders and the location of the propane tanks will be such that the radiological consequences of an explosion are bounded by the events described below.

406.1 Explosion Events: Vapor Container

Inflammable gases may be used in the Vapor Container during thermal cutting activities. The Decommissioning Plan recommends mechanical cutting of significantly contaminated systems, structures and components to minimize the generation of airborne radioactivity. However, thermal cutting methods utilizing inflammable gases could be used for dismantlement activities on components with lower contamination levels.

The release of radioactive material from an explosion event in the Vapor Container is discussed below for historical purposes. It established a limiting dose of 0.440 rem for this type of event. All of the contaminated systems have subsequently been removed from the Vapor Container. The total surface contamination remaining is currently estimated to be 0.05 Ci (Reference 400-19). Using the bounding dose conversion factor from Table 400.1, the dose at the Exclusion Area Boundary would be 3.68 mrem if 100% of this radioactivity were to be released to the environment. Since this dose is less than the limiting value established below, it is no longer necessary to require Vapor Container isolation or limit the quantity of explosive gases used in the Vapor Container.

An engineering evaluation was completed to determine the physical consequences of an explosion in the Vapor Container (Reference 400-10). If the Vapor Container is closed, the peak pressure resulting from an explosion of a standard cylinder of acetylene is less than 5% of the Vapor Container design pressure. If the Vapor Container is not isolated (e.g., Equipment Hatch open), about 10% of the Vapor Container air mass could be released through existing openings before the

pressure inside the Vapor Container equalizes with the outside atmospheric pressure. It is assumed that radiological contamination controls are re-established after the explosion by closing Vapor Container openings to terminate the release to the environment.

The explosion evaluation assumes that all of the energy from the gas explosion is converted into a pressure increase. This is a highly conservative assumption; most of the energy would be lost to other effects (e.g., heat generation, mechanical deformation). Less than 5% of the energy most likely would be converted into the pressure increase.

If an explosion nonmechanistically releases all of the internal surface contamination contained in systems inside the Vapor Container to the Vapor Container atmosphere, the release to the environment would not exceed the EPA PAGs at the Exclusion Area Boundary. The radioactivity content of the internal surface contamination in systems inside the Vapor Container is less than 130 Ci. Release of 10% of this material to the environment would result in a dose at the Exclusion Area Boundary of about 0.440 rem.

It is highly unlikely that all systems either will be opened or will be in the Vapor Container such that an explosion could remove the internal radioactivity. In addition, a significant fraction of the internal surface contamination is tightly bound. Radiological scoping analyses indicated that this fraction varied between 50% and 80%. The combination of these effects would reduce the release by 70% to 90%, resulting in an off-site dose of less than 0.100 rem.

In order to minimize the overall risk of an inflammable gas-air explosion in the Vapor Container, the Vapor Container should not be used as a general storage location for inflammable gas cylinders. Only cylinders in use or required in the near term should be located inside the structure at any given time. Additionally, thermal cutting methods using inflammable gases were not used to dismantle the following components with high contamination levels: Reactor Vessel, Main Coolant System, Feed and Bleed Heat Exchanger, Vapor Container Bleed Line Piping.

The consequences of an explosion in the Vapor Container are significantly less than the EPA PAGs. Therefore, there is no significant impact on pubic health and safety.

406.2 Explosion Events: Potentially Contaminated Area Warehouse

Inflammable gases may be used in the Potentially Contaminated Area Warehouse to power forklift trucks and to support thermal cutting activities. In the unlikely event that a single inflammable gas cylinder explodes in the warehouse, the pressure would be in excess of the capacity of the warehouse if the structure is sealed. Doors, portions of the roof or portions of the walls would likely fail in order to relieve excess pressure. Explosion released overpressure would not cause the containers to explode since the explosion is external to the containers. Some damage of the containers would be likely, but a release of significant portions of the contents of the containers as airborne radioactivity is not likely. In addition, the segregation and separation practices implemented for fire protection purposes would also limit the effects on storage containers.

In order to minimize the overall risk of an inflammable gas-air explosion in the Potentially Contaminated Area Warehouse, the warehouse should not be used as a general storage location for

inflammable gas cylinders. Only cylinders in use or required in the near term should be located inside the structure at any given time.

The consequences of an explosion in the Potentially Contaminated Area Warehouse are bounded by those of the decommissioning materials handling events presented in Section 403.5. Therefore, there is no significant impact on pubic health and safety.

406.3 Explosion Events: ISFSI

In EDCR 01-001 (Reference 400-23), an evaluation concluded that the existing NAC analysis for overpressure bounded an explosion of the two 1000 gallon propane tanks and the resulting effects on the casks within the FTE. Since the FTE is closer than the ISFSI to the propane tanks, the effects of an explosion of these tanks on the ISFSI is also bounded by the existing NAC-MPC analysis. An evaluation (Reference 400-24) concluded that the existing NAC analysis for overpressure also bounded an explosion of the six 1000 gallon propane tanks and there would be no adverse impact on the spent fuel canisters stored at the ISFSI.

407 EXTERNAL EVENTS

A systematic assessment of external events was made to evaluate the effects of natural and manmade events on decommissioning activities. The hazards associated with these events are assumed to be consistent with those that could have occurred while YNPS was in operation. Seven external events were identified as having potential applicability to the YNPS decommissioning based on a review of the natural and manmade external events presented in NUREG/CR-2300 (Reference 400-11).

All YNPS spent fuel is located at the ISFSI and is stored within fifteen NAC Multi-Purpose Canisters (MPCs). Chapter 11 of the NAC-MPC FSAR addresses the various off-normal and accident events which were postulated in support of the licensing and certification of the system for General License use (Reference 400-22). In each case, there were no radiological consequences as a result of the postulated event.

407.1 Aircraft Impact

YAEC evaluated the significance of a potential aircraft hazard on YNPS in response to Systematic Evaluation Program Topic III-4 (Reference 400-16). The analysis concluded that the annual probability of an aircraft impact was very low. Further consideration of the interaction between an aircraft impact and decommissioning is not warranted.

407.2 Earthquake

A seismic event during decommissioning could initiate a materials handling event similar to those described in Section 403.5. The analysis in Section 403.5 concludes that the bounding material handling event results in an off-site dose that is significantly less than the EPA PAGs. In addition, detailed planning of dismantlement activities will consider the impact of seismic events on components that are affected by removal activities. These components will be evaluated and physically supported, as appropriate, to limit the off-site dose resulting from a release of radioactivity to less than the EPA PAGs.

The ISFSI pad was designed and constructed in accordance with EDCR 99-302 (Reference 400-20). The ISFSI pad was qualified to the YNPS site design basis earthquake as developed during the Systematic Evaluation Program (SEP) with the NRC. NUREG-1536 (Reference 400-21) specifically identifies that, for nuclear plant sites licensed before the implementation of 10 CFR 100, the ISFSI Design Earthquake must be equal to or greater than the design earthquake developed for the SEP plants. The site design basis earthquake peak ground acceleration is 0.19g horizontal, 0.13g vertical whereas the NAC-MPC system was designed for 0.25g horizontal, 0.17g vertical. Since the site design basis earthquake is less than the NAC-MPC design basis earthquake, a VCC tip-over will not occur.

The potential for radiological consequences from a seismic event resulting in a dose at the Exclusion Area Boundary greater than the EPA PAGs is extremely low. In the unlikely event that a materials handling event is initiated, the consequences would be significantly less than the EPA PAGs. Therefore, the public health and safety are not significantly affected by a potential seismic event during decommissioning.

407.3 External Flooding

A flooding event at YNPS typically would be preceded by a sufficient warning period to prepare the site for the event by securing decommissioning activities. Most of the potentially removable radioactivity at YNPS is located in the Vapor Container, well above the potential flood height. Most of the balance of contaminated systems, structures and components would either be packaged for shipment or secured inside buildings. Containers that hold high radioactivity materials are designed for greater levels of structural integrity, providing additional protection. In the unlikely event that a lower radioactivity container or component is exposed to flood waters and radioactive material is dispersed, the flooding dilution effect results in a radiological consequence significantly less than an airborne release of a similar amount of radioactivity.

Flooding could initiate a loss of off-site power event. The analysis in Section 404.1 concludes that public health and safety are not adversely affected from a loss of off-site power event.

Flooding events at YNPS do not result in a significant radiological release, therefore, public health and safety are not adversely affected.

407.4 Tornadoes and Extreme Winds

The annual strike probability of a tornado that could cause a significant release of radioactivity from a container or component is very low. In addition, most components and containers that would be vulnerable to a tornado will be packaged awaiting shipment. The integrity of these containers would limit the probability and consequences of a significant release of radioactivity. Further consideration of the interaction between a tornado and decommissioning is not warranted.

An extreme winds event (i.e., hurricanes above 74 mph, thunderstorms above 100 mph) at YNPS typically would be preceded by a sufficient warning period to prepare the site for the event by securing decommissioning activities. Most of the potentially airborne radioactivity at YNPS is located in the Vapor Container, which protects the components from the effects of extreme winds and associated missiles. Most of the balance of contaminated systems, structures and components would either be packaged for shipment or secured inside buildings with system integrity, providing protection from the extreme winds and associated missiles.

Containers that hold higher radioactivity materials are designed for greater levels of structural integrity, providing additional protection. In the unlikely event that a lower radioactivity container or component is unprotected and is exposed to extreme winds and radioactive material is dispersed, the combination of low radioactivity content and significant dispersion by the wind would result in an off-site dose that is bounded by the limiting release of the materials handling event presented in Section 403.5.

Tornadoes or extreme winds could initiate a loss of off-site power event. The analysis in Section 404.1 concludes that public health and safety are not adversely affected from a loss of off-site power event.

Extreme tornadoes and winds events at YNPS will not result in a significant radiological release, therefore, public health and safety are not adversely affected.

407.5 Forest Fire

A forest fire event at YNPS typically would be preceded by a sufficient warning period to prepare the site for the event by securing decommissioning activities if necessary. In addition, YNPS is protected from the effects of a forest fire by a buffer zone surrounding the facility. The probability of a forest fire of sufficient intensity to bridge the zone is very low (Reference 400-15).

In the unlikely event that a forest fire causes an on-site fire, the fire protection features described in Section 405 would be sufficient to mitigate the consequences of the fire. A forest fire could also initiate a loss of off-site power event. The analysis in Section 404.1 concludes that public health and safety are not adversely affected from a loss of off-site power event.

Forest fire events at YNPS will not result in a significant radiological release, therefore, public health and safety are not adversely affected.

407.6 Lightning Event

The lightning strike annual probability for a decommissioning activity or single exposed container or component is very low. In addition, YNPS structures provide protection against lightning. Although the effects of lightning generally are localized, a lightning strike could initiate a loss of off-site power event or a fire. The analyses in Sections 404.1 and 405 conclude that public health and safety are not adversely affected from a loss of off-site power event or fire event. Further consideration of the interaction between decommissioning and a lightning event are not warranted.

407.7 On-Site Transportation Accidents

On-site transportation accident events consist of those events occurring after removal of a container or components from a structure, but before final packaging for shipment. These events could occur during transportation of a container or component to a packaging area.

Detailed planning will ensure that only one container or component with high potential airborne radioactivity is transported simultaneously by the same vehicle until they are prepared for final shipment. This constraint ensures that the off-site dose resulting from an on-site transportation event is bounded by the materials handling event presented in Section 403.5. Additionally, detailed planning will limit the maximum number of containers transported on-site to ensure that they are also bounded by this analysis.

Containers and components stored in materials storage areas awaiting final packaging will be located to preclude impact from a runaway vehicle. The location selection will consider separation by distance, barrier or radioactivity to ensure that the off-site dose resulting from an impact is bounded by the dose resulting from the materials handling event presented in Section 403.5.

The radiological consequences of an on-site transportation event are bounded by a decommissioning materials handling event. The physical consequences of an on-site transportation event does not adversely affect the dry cask storage system at the ISFSI. Therefore, public health and safety are not adversely affected by an on-site transportation event.

408 SPENT FUEL STORAGE EVENTS

The initial decommissioning accident analysis evaluated three potential events related to spent fuel storage in the Spent Fuel Pit. These events were a fuel handling accident, a loss of spent fuel pool cooling capability, and interactions between fuel in the Spent Fuel Pit and decommissioning activities. The results of this evaluation were reported to be potential doses that were well below the EPA PAGs. The spent reactor fuel has now been removed from the Spent Fuel Pit and transferred to an on-site ISFSI. The evaluation of spent fuel storage events in the Spent Fuel Pit is, therefore, no longer necessary.

408.1 Events

All YNPS spent fuel is located at the ISFSI and is stored within fifteen NAC Multi-Purpose Canisters (MPCs). Chapter 11 of the NAC-MPC FSAR addresses the various off-normal and accident events which were postulated in support of the licensing and certification of the system for General License use (Reference 400-22). In each case, there were no radiological consequences as a result of the postulated event.

The YNPS developed and maintains a 10CFR72.212 evaluation report, which concludes that all site-specific parameters found at the YNPS site are bounded by the NAC-MPC design basis analyses performed for the NAC-MPC system.

500 ADMINISTRATION OF THE DECOMMISSIONING PLAN

500.1 Regulatory Basis for Administration of the Decommissioning Plan

Regulatory Guide 1.185, "Standard Format and Content for Post-Shutdown Decommissioning Activities Report)" (Reference 500-6), encourages licensees with an approved Decommissioning Plan to "extract the pertinent detail from the Decommissioning Plan and submit a PSDAR update in the format and content specified by the regulatory guide." As a result, information from the approved YNPS Decommissioning Plan that was incorporated into the FSAR has since been extracted, updated and relocated to the PSDAR within the FSAR.

REFERENCES

500-1 Letter, YAEC to USNRC, dated December 20, 1993.

500-2 Draft Regulatory Guide DG-1005, "Standard Format and Content For Decommissioning Plans for Nuclear Reactors."

500-3 Letter, USNRC to YAEC, dated February 14, 1995.

500-4 Letter, YAEC to USNRC, dated August 22, 1995.

500-5 NUREG-0586, Final Generic Environmental Impact Statement on Decommissioning of Nuclear Facilities, August 1988.

500-6 Regulatory Guide 1.185, "Standard Format and Content for Post-Shutdown Decommissioning Activities Report, dated July 2000."

501 DECOMMISSIONING COST ESTIMATE AND FUNDING PLAN

501.1 Decommissioning Cost Estimate

This information has been extracted, updated and relocated to the PSDAR within the FSAR.

501.2 Decommissioning Funding

This information has been extracted, updated and relocated to the PSDAR within the FSAR.

502 DECOMMISSIONING ORGANIZATION AND RESPONSIBILITIES

502.1 YAEC Commitment

Yankee Atomic Electric Company (YAEC) is committed fully to compliance with the existing license and applicable regulatory requirements during all phases of YNPS decommissioning. YAEC's commitment to the safe decommissioning of the facility will be accomplished with diligence and quality. Corporate principles, policies, and goals will be followed to ensure performance excellence, management competence, and high standards in every facet of the decommissioning.

502.1.1 Goals

The primary goals of the YNPS decommissioning are 1) to safely remove the nuclear facilities from service and to reduce residual radioactivity to a level that permits release of the property for unrestricted use and termination of the license and 2) to safely store spent nuclear fuel until it can be removed from the site. While achieving these primary goals, YAEC will conduct all decommissioning operations consistent with applicable regulations and a focus on the following considerations:

- Maintain radiation exposure to the public and on-site personnel as low as is reasonably achievable.
- Ensure occupational safety for all on-site personnel.
- Minimize environmental impact.
- Minimize radioactive waste generation.
- Ensure prudent expenditure of decommissioning funds.

502.1.2 Organizational Strategy

The organizational strategy must ensure that adequate numbers of experienced and knowledgeable personnel are available to perform the technical and administrative tasks required to decommission YNPS. The YNPS decommissioning organization is currently staffed with experienced individuals who have worked at or are very knowledgeable of the plant. YAEC believes that retaining personnel with intimate knowledge of YNPS is important to the success of decommissioning.

YAEC is responsible for YNPS decommissioning. In this position YAEC has direct control and oversight over all decommissioning activities. This role is similar to that taken by YAEC during the 31 year operation of YNPS. In that role YAEC provided operational, technical, licensing, and project management support of YNPS. YAEC will contract services to supplement its capabilities as necessary.

Organizational impacts associated with the transition from plant closure to dismantlement were evaluated periodically to assure that adequate and appropriate staffing levels and capabilities were

preserved. YAEC will maintain staffing, to the extent possible, to optimize resource utilization and to capitalize on positive project momentum. Both of these are characteristics of successful project teams.

The Yankee Decommissioning Quality Assurance Program (YDQAP) requires indoctrination and training of staff personnel involved with YDQAP activities.

502.2 YAEC Organization and Functions

The YAEC organizational structure that will be implemented during decommissioning is presented in Section 1 of the YDQAP. Decommissioning functions are described in site administrative procedures.

503 TRAINING PROGRAM

YAEC will maintain a training program commensurate with the needs of the various phases of decommissioning and the Training Rule 10CFR50.120. The training program, in conjunction with other administrative programs and controls, will ensure that qualified individuals are available to operate and maintain the facility in a safe manner. The training programs will be based on a systematic analysis of job performance requirements. The analysis will ensure that personnel will have qualifications commensurate with the performance requirements of their jobs.

503.1 General Employee Training

General Employee Training will be provided to all personnel who have unescorted access to the YNPS site. Initial and annual requalification training will include the following topics commensurate with the stages of decommissioning which typically will consist of information on the following topics:

- Plant Organization and Administration
- Plant Description
- Occupational Safety
- Quality Assurance
- Fire Protection
- Emergency Response
- Radiation Protection
- Security

503.2 Radiation Worker Training

Initial and annual requalification radiation worker training will be provided to personnel who require entry into the Radiologically Controlled Area (RCA). Training topics and scope will be commensurate with the stages of decommissioning, which typically will consist of information on the following topics:

- Fundamentals of radiation.
- Radiation and contamination measurement and control.
- Maintaining radiation dose as low as is reasonably achievable.
- Radioactive waste minimization.
- Radiation work permits.
- Radiation protection issues associated with decommissioning.
- Donning and removing protective clothing.

503.3 Certified Fuel Handler

YNPS had previously implemented, with NRC review and approval, a Certified Fuel Handler training program which replaced the 10CFR Part 55 NRC licensed operator training program

(Reference 503-2). Following the transfer of all spent fuel to the YNPS ISFSI, there is no longer a need to maintain Certified Fuel Handlers or the training program. NRC issued Amendment 157 which, in part, eliminated the requirement for the CFH training program (Reference 503-4).

503.4 Specific Job Training

YNPS training programs will assure the following:

- Personnel responsible for performing activities are instructed as to the purpose, scope, and implementation of applicable controlling procedures.
- Personnel performing activities are trained as appropriate, in the principles and techniques of the activity being performed.
- The methods of implementing the training programs are documented.

503.5 Nonradiation Worker Indoctrination

Personnel who are not qualified radiation workers may be granted escorted access to the Radiologically Controlled Area (RCA). All personnel without radiation worker training require escorts that are qualified radiation workers.

503.6 Training Records

Training records will be maintained and retained in accordance with administrative plant procedures.

REFERENCES

503-1 BYR 93-055, Implementation of the Training Rule, 10CFR50.120, J. K. Thayer to M. B. Fairtile (USNRC), July 28, 1993.

503-2 NYR 92-122, NRC Approval of Certified Fuel Handler Program and Termination of Operator Licenses (TAC No. M83384), M. B. Fairtile (USNRC) to J. M. Grant, June 26, 1992.

503-3 NYR 93-149, NRC Partial Exemption from the Training Rule, 10CFR50.120 (TAC No. M87168), M. B. Fairtile (USNRC) to J. M. Grant (YAEC), November 19, 1993.

503-4 NYR 03-027, J. Hickman (USNRC) to J. Kay (YAEC), Issuance of Amendment #157 RE: Deletion of Operational and Administrative Requirements Following Fuel Transfer to ISFSI, April 18, 2003.

504 DEFUELED TECHNICAL SPECIFICATIONS

504.1 Description

After the decision to permanently cease YNPS reactor operations, YAEC submitted a proposed change in March 1992 to the NRC modifying the plant full power operating license to a possession only license status (Reference 504-1). The proposed change removed authority of YAEC to operate the reactor and move fuel back into either the Reactor Vessel or Vapor Container. The facility license was amended in August 1992 to a possession only status (Reference 504-2).

Coincident with the possession only license submittal, YAEC reviewed the plant licensing basis to determine the applicability of existing Technical Specifications to a permanently defueled condition. The Technical Specifications which were applicable to a defined mode associated with fuel in the reactor were determined to be not applicable to the permanently defueled condition. Technical Specifications that were determined to be applicable at all times were reviewed to assess their relevance to the permanently defueled condition. Individual Technical Specification changes were proposed for the higher priority items identified by the review.

On December 23, 1992, a Technical Specification change was proposed to complete the transition of the Technical Specifications to be applicable to the permanently defueled condition (Reference 504-3). The proposed change eliminated specifications that were not applicable and reformatted the specifications that remained applicable. The NRC approved the license amendment on June 11, 1993 (Reference 504-4).

In January 2003, YAEC submitted a proposed license and Technical Specification change to delete operational and administrative requirements that were no longer applicable following transfer of all spent fuel to the YNPS ISFSI (Reference 504-5). All remaining operational and administrative requirements were relocated to the YDQAP. The NRC approved the proposed changes on April 18, 2003 (Reference 504-6).

- Limiting conditions for operation and surveillance requirements were reduced to the following items which have been relocated to the Yankee Decommissioning Quality Assurance Program (YDQAP):

- Liquid Hold-Up Tanks - This specification presents radioactive material curie limits for tanks that are not protected by engineered features that would contain inadvertent release of their contents.

- Sealed Source Contamination - This specification presents maximum contamination limits for sealed sources to ensure that allowable intake limits are not exceeded.

The design features and administrative controls were modified to delete portions that were not applicable to a permanently defueled condition. With all spent fuel located at the YNPS ISFSI, all remaining administrative controls have been relocated to the YDQAP.

In November 2003, YAEC submitted the YNPS License Termination Plan (LTP) and a proposed amendment to the YNPS Possession Only License (Reference 504-7). The License Termination

Plan demonstrates that the remaining decommissioning activities will be performed in accordance with the requirements of Title 10 of the Code of Federal Regulations, will not be inimical to the common defense and security or to the health and safety of the public, and will not have a significant effect on the quality of the environment. The proposed license amendment adds a license condition that provides criteria to determine the need for NRC approval of changes to the approved License Termination Plan. In November 2004, YAEC submitted Revision 1 to the YNPS LTP (Reference 504-8). This revision incorporated YAEC responses to NRC Request for Additional Information (RAIs). In April 2005, YAEC submitted a supplement to the proposed amendment to the YNPS Possession Only License (Reference 504-9). This supplement added a new proposed license condition related to groundwater radionuclide concentrations. NRC approval of these submittals is pending. Table 504.1 summarizes the Technical Specification changes approved by the NRC.

REFERENCES

504-1 BYR 92-037, Request For Modification of Yankee Nuclear Power Station's Operating License To Remove Authorization For Reactor Power Operation - Possession Only License, J. K. Thayer to T. Murley (USNRC), March 27, 1992.

504-2 NYR 92-148, Issuance of Amendment No. 142 To Facility License No. DPR-3 - Yankee Nuclear Power Station (TAC No. M83024), M. B. Fairtile (USNRC) to J. M. Grant, August 8, 1992.

504-3 BYR 92-112, Permanently Defueled Technical Specifications, J. K. Thayer to M. Fairtile (USNRC), December 21, 1992.

504-4 NYR 93-062, Issuance of Amendment No. 148 To Facility Possession Only License No. DPR-3 - Yankee Nuclear Power Station (TAC No. M85244), M. B. Fairtile (USNRC) to J. M. Grant, June 11, 1993.

504-5 BYR 03-001, Deletion of Operational and Administrative Requirements from the Yankee Nuclear Power Station Defueled Technical Specifications, K.J. Heider to NRC, January 14, 2003.

504-6 NYR 03-027, J. Hickman (USNRC) to J. Kay (YAEC), Issuance of Amendment 157 RE: Deletion of Operational and Administrative Requirements Following Fuel Transfer to ISFSI, April 18, 2003.

504-7 BYR 03-80, B.C. Wood (YAEC) to USNRC, Submittal of Yankee Nuclear Power Station's License Termination Plan and Proposed Revision to Possession Only License, November 24, 2003

504-8 BYR 04-133, J.A. Kay (YAEC) to USNRC, submittal of Revision 1 to the Yankee Nuclear Power Station's License Termination Plan, November 19, 2004

504-9 BYR 05-28, J.D. Rollins (YAEC) to USNRC, Supplement to Proposed Amendment to YNPS Possession Only License, April 7, 2005

TABLE 504.1

Technical Specification Changes for Transition to Permanently Defueled Condition

Submittal	Approval Date	Amendment Number	Reference
Minimum Shift Staffing	July 22, 1992	141	NYR 92-143, Issuance of Amendment No. 141 To Facility Operating License No. DPR-3 – Yankee Nuclear Power Station (TAC No. M83383).
Possession Only License	August 8, 1992	142	NYR 92-148, Issuance of Amendment No. 142 To Facility License No. DPR-3 - Yankee Nuclear Power Station (TAC No. M83024).
Transfer of Fire Protection Specifications to Manual	August 20, 1992	144	NYR 92-156, Issuance of Amendment No. 144 To Facility Possession Only License No. DPR-3 – Yankee Nuclear Power Station (TAC No. M83746).
PORC Administration Change	September 4, 1992	145	NYR 92-182, Issuance of Amendment No. 145 To Facility Possession Only License No. DPR-3 - Yankee Nuclear Power Station (TAC No. M84005).
RETS/REMP Transfer	November 5, 1992	146	NYR 92-183, Issuance of Amendment No. 146 To Facility Possession Only License No. DPR-3 – Yankee Nuclear Power Station (TAC No. M84372).
Permanently Defueled Technical Specifications	June 11, 1993	148	NYR 93-062, Issuance of Amendment No. 148 To Facility Possession Only License No. DPR-3 – Yankee Nuclear Power Station (TAC No. M85244).

Submittal	Approval Date	Amendment Number	Reference
Spent Fuel Pit – Crane Travel and Water Level Changes	June 17, 1998	149	NYR 98-029, Issuance of Amendment No. 149 to Possession Only License No. DPR-3 – Yankee Nuclear Power Station (TAC No. M99527).
Deletion of Site Boundary Definition and Relocation of Tech Spec Figure 5.1-1	February 3, 1999	150	NYR 99-012, Issuance of Amendment No. 150 to Possession Only License No. DPR-3 – Yankee Nuclear Power Station (TAC No. MA3414).
Change Submittal Interval of RETS from Semi-annual to Annual	March 5, 1999	151	NYR 99-021, Issuance of Amendment No. 151 to Possession Only License No. DPR-3 – Yankee Nuclear Power Station (TAC No. MA3894).
Eliminate Fitness-for-Duty Requirement from License	August 27, 1999	152	NYR 99-071, Issuance of Amendment No. 152 to Possession Only License No. DPR-3 – Yankee Nuclear Power Station (TAC No. MA5218).
Delete Overtime Restrictions from Tech Specs	October 8, 1999	153	NYR 99-079, Issuance of Amendment No. 153 to Possession Only License No. DPR-3 – Yankee Nuclear Power Station (TAC No. MA5030).
Consolidate Management Positions and Transfer Review and Audit Functions to the YDQAP	June 20, 2000	154	NYR 00-044, Issuance of Amendment No. 154 to Possession Only License No. DPR-3 – Yankee Nuclear Power Station (TAC No. MA5032).
Transfer Certain Administrative Requirements to the YDQAP	May 15, 2001	155	NYR 01-043, Issuance of Amendment No. 155 to Possession Only License No. DPR-3 – Yankee Nuclear Power Station (TAC No. MA0929).

Submittal	Approval Date	Amendment Number	Reference
Revise Security Plan to address Independent Spent Fuel Storage Installation	March 13, 2002	156	NYR 02-023, Issuance of Amendment No. 156 to Possession Only License No. DPR-3 – Yankee Nuclear Power Station (TAC No. MB0209).
Bases Change for Crane Travel Over the Spent Fuel Pit	August 7, 2002	-------	NYR 02-061, Bases Change for Crane Travel Over the Spent Fuel Pit – Yankee Nuclear Power Station (TAC No. MB5634).
Delete Operational and Administrative Requirements from Tech Specs. Relocate Remaining Operational and Administrative Requirements to the YDQAP	April 18, 2003	157	NYR 03-027, Issuance of Amendment No. 157 to Possession Only License No. DPR-3 – Yankee Nuclear Power Station (TAC No. L52086).

505 PROCEDURES

505.1 Normal Defueled Operating Procedures

The normal Operating Procedures used in the defueled condition have been developed in accordance with the Yankee Decommissioning Quality Assurance Program. The controlled procedures, utilized by plant department(s) personnel for the conduct of plant operations, are contained in the Plant Procedures Manual and are available for inspection.

505.2 Emergency Procedures

The Emergency procedures are comprised of the Emergency Operating Procedures and the Emergency Plan Implementing Procedures. These procedures are revised, reviewed and controlled in accordance with the Yankee Decommissioning Quality Assurance Program.

The Emergency Operating Procedures provide instructions to the Operations personnel. These procedures identify various plant system(s) and equipment failure/malfunction(s) that may occur, describe the conditions that enable operator recognition of such an event, and provide instructions that assist in mitigating an event and its consequence(s) to the plant, plant personnel, the public, and the environment.

The Emergency Plan Implementing Procedures (EPIPs) provide instruction to Emergency Response Organization (ERO) personnel. These procedures describe the responsibilities and provide for: Classifying emergencies; notifying plant personnel and off-site agencies; activating the Emergency Response Facilities (ERFs); controlling on-site radiation exposures; responding to medical emergencies, performing security activities; evaluating radiological data; formulating protective action recommendations; releasing public information; operating emergency computer equipment; and preparing for recovery of the plant. Other EPIPs provide for maintaining the ERFs, maintaining emergency response equipment, and training the ERO.

506 MAINTENANCE PROGRAM

The Maintenance Program is designed to ensure continued system reliability for those systems used to support dry cask storage at the YNPS ISFSI. The program is implemented through administrative and maintenance procedures. These procedures have been developed in accordance with the Yankee Decommissioning Quality Assurance Program. The controlled procedures are utilized for the conduct of maintenance activities and are available for inspection.

507 RADIATION PROTECTION PROGRAM

507.1 Introduction

The Code of Federal Regulations defines decommissioning as the activities necessary "to remove (as a facility) safely from service and reduce residual radioactivity to a level that permits release of the property for unrestricted use and termination of license" (10CFR50.2). A comprehensive Radiation Protection Program is needed to meet the objectives presented in the definition. YNPS intends to maintain essential elements of the Radiation Protection Program that were implemented successfully during its 31 year operating life to meet this goal. Changes to the program will be made as necessary to meet the needs of decommissioning.

The Radiation Protection Program has undergone and continues to undergo inspections and audits from both the NRC and the YAEC Quality Assurance Department. The purpose of these reviews is to ensure that the program complies with the Code of Federal Regulations, applicable regulatory guidance documents, and industry standards. YAEC is committed to maintaining a high level of performance and to enhancing the quality of the Radiation Protection Program throughout the YNPS decommissioning.

The YNPS Radiation Protection Program for decommissioning will continue to be implemented through existing YNPS administrative procedures. These procedures constitute the highest tier documentation of the Radiation Protection Program and define the radiation protection organization, responsibilities, authorities, administrative policies, program objectives, and standards to implement the Radiation Protection Program.

This section of the FSAR presents an overview of the Radiation Protection Program administrative and implementing procedures that will be used during decommissioning.

507.2 Management Policies

507.2.1 Management Policy Statement

YAEC is committed to the safe decommissioning of YNPS. The primary objective of the Radiation Protection Program is to minimize the actual and potential exposure of workers, visitors, and general public to radiation. YAEC and its contractors will provide sufficient qualified staff, facilities, and equipment to conduct a radiologically safe decommissioning. YAEC will continue to comply with regulatory requirements, radiation exposure limits, and radioactive material release limits. In addition, YAEC will make every effort to maintain radiation exposures and releases of radioactive materials in effluents to unrestricted areas as low as is reasonably achievable (ALARA). The ALARA philosophy will be incorporated into all decommissioning activities and will have full management support.

YAEC requires good radiation work practices as a condition of employment. Each radiation worker is responsible for performing work in a radiologically safe manner, consistent with the standards of conduct described in the Radiation Protection Program procedures.

This management policy will continue to be communicated to all radiation workers through General Employee Training and will continue to be incorporated into all applicable procedures.

507.2.2 Administrative Policy

YAEC will ensure that activities conducted during decommissioning will be managed by qualified individuals who will perform program operations in accordance with established procedures. Radiological hazards will be monitored and evaluated on a routine basis to maintain radiation exposures and the release of radioactive materials to unrestricted areas as far below specified limits as is reasonably achievable. Each element of the Radiation Protection Program will be defined and implemented using written procedures. Radiation protection training will be provided to all occupationally exposed individuals to ensure that they understand and accept their responsibility to follow procedures and to maintain their individual radiation dose as low as is reasonably achievable.

YAEC project management will ensure that work specifications, designs, and work packages involving potential radiation exposure or handling of radioactive materials incorporate effective radiological controls. Project supervisors will incorporate radiation protection considerations in the work activities under their control.

Radiation protection records will be prepared and maintained using high standards of accuracy, traceability, and legibility to meet the requirements of regulatory agencies and company procedures.

507.2.3 ALARA Policy

YAEC is committed to maintain an ALARA Program that is implemented based on guidance provided in Regulatory Guides 8.8 and 8.10 (References 507-2 and 507-3). All activities at YNPS involving radiation and radioactive materials will be conducted such that exposure of employees, contractors, and the general public to radiation is maintained as low as is reasonably achievable. This determination will consider the current state of technology and the economics of improvements in relation to their benefit (i.e., reduction of dose).

Appropriate ALARA considerations will be incorporated into decommissioning activity planning and design activities at an early stage to allow full consideration of reasonable alternatives. Final plant modifications also will be reviewed to ensure that ALARA was incorporated into the activities.

YNPS management will establish and monitor progress towards specific goals and objectives for the YNPS decommissioning ALARA Program.

507.2.4 Regulatory Compliance Policy

YAEC is committed to maintain the Radiation Protection Program in compliance with the requirements of the Code of Federal Regulations and, to the extent practical, information contained in industry standards, regulatory guides, and other guidance documents. The Radiation Protection Program is assessed against all new regulatory guidance and modified as necessary. YAEC implemented the revised 10CFR Part 20 on January 1, 1994.

507.2.5 Waste Minimization and Disposal Policy

YAEC will ensure appropriate processing, packaging and monitoring of solid, liquid and gaseous wastes during decommissioning by continuing to implement the Process Control Program, the Radiological Effluent Control Program and the Radiological Environmental Monitoring Program. These programs will be maintained in strict compliance with the YDQAP and Off-Site Dose Calculation Manual requirements to meet the requirements of 10CFR Parts 20, 50, 61, and 71; 49CFR; state regulations; disposal site requirements; and any other applicable requirements. Implementing procedures will be maintained for the classification, treatment, packaging, and shipment of radioactive material.

YNPS will continue to implement and enforce a Radioactive Waste Reduction Program to minimize the generation of radioactive wastes. YNPS management will monitor waste minimization efforts for decommissioning. All decommissioning personnel will receive training in the applicable procedures and practices to minimize the generation of radioactive waste.

507.2.6 Respiratory Protection Policy

YAEC is committed to minimizing the inhalation of air contaminated with dusts, mists, fumes, gases, vapors, and radionuclides at YNPS. The primary means of achieving this goal is to prevent or mitigate the hazardous condition at the source. Every reasonable effort will be made to achieve this objective by using engineering controls, including process modification, containment, and ventilation techniques. Respiratory protection equipment usage will be considered after engineering controls have been evaluated. Use of respiratory protection equipment for radionuclide inhalation reduction will be consistent with the goal of maintaining the total effective dose equivalent to personnel as low as is reasonably achievable.

The existing respiratory protection program will continue to be implemented and maintained in accordance with 10CFR Part 20 and other applicable regulatory guidance.

507.3 Decommissioning Exposure Projections

This information has been extracted, updated and relocated to the PSDAR within the FSAR.

507.4 ALARA Program

507.4.1 General Program Description

All activities at YNPS involving radiation and radioactive material will be conducted such that the radiation doses received by employees, contractors, and the general public are maintained as low as is reasonably achievable. This determination will consider the current state of technology and the economics of improvements in relation to the benefit (i.e., reduction of dose). The YNPS ALARA Program is implemented in an operating plant procedure, and is based on guidance provided in Regulatory Guides 8.8 and 8.10.

The following criteria will continue to be used to determine when an activity requires a specific ALARA review:

- The dose for the total completion of the activity exceeds 1 person-rem.
- The whole body dose rate field exceeds 5 R/hr for an activity other than a surveillance or inspection.
- The loose surface contamination exceeds 500,000 dpm/100cm2 (beta/gamma) for an activity other than surveillance or inspection.
- The airborne radioactivity concentration exceeds 40 DAC as a result of an activity or in the area of an activity.
- The work involves a planned special exposure.
- The Radiation protection staff or ALARA Coordinator request an ALARA review.

In addition to these criteria, ALARA considerations will be incorporated into decommissioning activity planning and design activities at an early stage to allow full consideration of reasonable alternatives. Plant modifications also will be reviewed to ensure that ALARA was incorporated into the activities. YNPS management will establish and monitor progress towards specific goals and objectives for the YNPS decommissioning ALARA Program.

507.4.2 ALARA Program Organization and Responsibilities

The Radiation Protection Manager coordinates the ALARA Program scope and implementation. The ALARA Coordinator is responsible for completing the ALARA reviews. However, the actual implementation of specific ALARA actions, as incorporated into daily work activities, is the responsibility of each individual manager, supervisor, and worker.

An administrative plant procedure defines the responsibilities and authorities of the ALARA Committee. The primary responsibility of the ALARA Committee is to advise the Vice President of Decommissioning on matters related to exposure and contamination reduction. The committee will review the following:

- All plant decommissioning activities, maintenance activities, and modifications that have an estimated dose expenditure in excess of 10 person-rem.
- All ALARA post-job reviews for activities exceeding 10 person-rem.
- Any individual's dose which exceeds the quarterly or annual administrative limits established for the individual.
- Any exposure or contamination issue of concern requested by committee members.

The ALARA Committee is chaired by the Radiation Protection Manager. Other members of the committee include other designated managers and supervisors involved in decommissioning activities. Members are given the appropriate authority and responsibility necessary to implement an effective ALARA Program.

507.4.3 ALARA Training and Instruction

Commitment to the principles of the ALARA Program will be reflected in all radiation protection training. Training courses will be evaluated by the Radiation Protection Manager to ensure that ALARA principles are incorporated into lesson plans.

507.5 Administrative Dose Control

Administrative radiation dose controls will continue to be implemented during decommissioning. Dose controls ensure the following:

- Personnel do not exceed regulatory dose limits.
- Equitable distribution of dose among available qualified workers.
- Collective dose to workers is as low as is reasonably achievable.

Administrative plant procedures implement the program to control and limit external and internal radiation exposure. These procedures include the following elements:

- A summary of administrative and regulatory dose limits.
- A description of Radiation Control Area Postings and Controls.
- A description of radiological survey data available on-site.
- Instructions on the use and care of dosimetry.
- Instructions on the conduct of work in the Radiation Control Area.
- Instructions on personal monitoring for contamination.

Personnel dose reports are prepared weekly with more frequent reports during periods of high work activity. The reports are distributed to each plant department and are posted in the Radiation Control Area Control Point. Decommissioning supervisors are responsible for reviewing the dose reports and planning high dose activities such that the dose is distributed as evenly as possible among available qualified personnel.

507.6 Radiation Work Permits

Radiation Work Permits will continue to be used to administratively control personnel entering or working in areas that have, or potentially have, radiological hazards present. The primary function of the Radiation Work Permit is to allow authorized activities to be conducted in radiologically controlled areas using safe and radiologically sound practices. The permit documents the work description, the worker names, the radiological conditions, and the radiological precautions and requirements. The permit also is an element of the ALARA program where it is used to screen activities to determine if a specific ALARA review is necessary and to track personnel and job exposure data.

An administrative plant procedure presents the requirements for requesting, using and terminating a Radiation Work Permit. An additional operating plant procedure presents the process used by the radiation protection staff to prepare, issue and monitor a Radiation Work Permit.

Radiation Work Permits are required for the following activities:

- Entry into a high or very high radiation area, an airborne radioactivity area, or any area posted with a sign stating that a Radiation Work Permit is required.
- Maintenance on or inspections of equipment with loose surface contamination levels in excess of 10,000 dpm/100 cm2 (beta-gamma).
- When prudent radiation protection practices warrant the use of a Radiation Work Permit, as determined by the Radiation Protection Manager.

507.7 Area Definitions and Postings

An operating plant procedure describes the requirements for radiological postings at the entrance and boundaries of radiologically controlled areas. The purpose of the postings is to advise workers of radiological hazards that may be encountered in the areas. Informational postings may also be used to provide additional radiological instructions to workers. Each worker is responsible for the observance of the area postings and compliance with the indicated requirements.

507.8 External Dosimetry

507.8.1 General Considerations

External radiation dose will be monitored through the use of thermoluminescent dosimeters (TLD), direct reading dosimeters, and digital alarming dosimeters. The official record of external dose from beta and gamma radiation normally will be obtained from the TLD readings. Direct reading or digital alarming dosimeters will be used as a means for tracking dose between TLD processing and may also be used as a back-up to the TLDs. TLDs will be processed at a frequency that ensures personnel dose limits are not exceeded.

507.8.2 Monitoring Whole Body Dose

All decommissioning workers are required to wear external radiation monitoring devices whenever they enter the Radiation Control Area. Radiation workers are instructed to read the direct reading and digital alarming dosimeters prior to use and periodically during the work activity. The TLD and the direct reading or digital alarming dosimeters are worn typically in close proximity to each other on the trunk of the body between the neck and waist. Under certain conditions, where the chest or trunk may not be the location of highest whole body dose, dosimetry devices may be relocated.

Multiple whole body dosimetry may be used if work is to be performed in a nonuniform radiation field in which the dose to a portion of the body that is exposed to the highest dose source cannot easily be determined. In these cases, multiple sets of dosimeters will be worn on those portions of the body expected to receive the highest dose. Guidance for conducting the evaluation and criteria

for determining when multiple dosimetry is required is provided in an operating and departmental plant procedure.

Dosimetry requirements are specified on the Radiation Work Permit.

507.8.3 Dosimetry Quality Control

Periodic quality assurance checks of dosimetry will be conducted by exposing whole body, extremity and environmental dosimetry to known radiation doses and sending them to a qualified Environmental Laboratory for processing. A departmental plant procedure implements the quality control program for plant dosimetry. Discrepancies between the expected exposure and the laboratory results will be reconciled and documented. The Environmental Laboratory is accredited by the National Institute of Standards and Technology (NIST) under the National Voluntary Laboratory Accreditation Program (NVLAP) for dosimetry.

507.9 Internal Dosimetry Control and Monitoring

507.9.1 General Considerations

Internal radiation dose inherently is more difficult to measure than external radiation dose, but it is generally much easier to prevent. Therefore, major emphasis is placed on preventing internal radiation dose, as long as it is consistent with the goal of keeping total effective dose as low as is reasonably achievable.

The primary methods for controlling the intake of radioactive material into the body is identifying and minimizing the sources of airborne radioactivity and applying engineering controls to reduce airborne radioactivity concentrations. The use of respiratory protection will be used after the primary methods have been implemented to the extent practicable.

An administrative plant procedure describes the program that is implemented to monitor potential internal radiation exposures.

507.9.2 Bioassay Program

Whole body counting (in vivo) is the primary method that is used to determine the identity and quantity of gamma emitting radionuclides present in the body. Personnel will receive a whole body count after a suspected intake of radioactive materials. Radiation protection implementing procedures provide guidance on whole body counter operation, calibration, and quality control.

Indirect bioassay (in vitro) measurements will be made, as necessary, to monitor for alpha and beta emitting radionuclides and to provide data for calculation/determination of internal dose. This method of bioassay will typically be used only for radionuclides which cannot be determined by whole body counting or when additional information on an intake is required. Radiation protection implementing procedures include criteria for indirect bioassay and methods for data analysis and interpretation.

An administrative plant procedure is used to implement the bioassay program at YNPS.

507.10 Respiratory Protection Program

A Respiratory Protection Program will continue to be maintained in accordance with 10CFR Part 20 and other applicable regulatory guidance. The primary means of providing respiratory protection is to prevent or mitigate the hazardous condition at the source. Every reasonable effort will be made to achieve this objective by using engineering controls, including process modification, containment, and ventilation techniques. Respiratory protection equipment usage will be considered after engineering controls have been evaluated. Use of respiratory protection equipment will be consistent with the goal of maintaining the total effective dose to personnel as low as is reasonably achievable.

An administrative plant procedure is used to implement the Radiological Respiratory Protection Program at YNPS.

507.11 Radioactive Material Controls

The Radiation Protection Program establishes radioactive material controls that ensure the following:

- Prevention of inadvertent radioactive material release to uncontrolled areas.
- Assurance that personnel are not exposed inadvertently to radiation from radioactive materials.
- Minimization of the amount of radioactive waste material generated during decommissioning.

Radioactive material is defined as any of the following: 1) material activated by YNPS reactor operation, 2) material contaminated from the operation or decommissioning of YNPS, or 3) licensed material procured and used to support the operation and decommissioning of YNPS.

All materials leaving the Radiation Control Area, and subsequently the YNPS site, will be surveyed to ensure that radioactive materials are not inadvertently discharged from the facility. An administrative plant procedure will be used to ensure that all potentially radioactive or contaminated items removed from the Radiation Control Area or the YNPS site are surveyed. This procedure was written to incorporate the guidance presented in NRC Circular No. 81-07 and NRC Information Notice No. 85-92 (References 507-5 and 507-6). The following survey methods (instrumentation is typical) will be used:

- Materials and Equipment - Direct frisking with a portable Geiger-Mueller, gas proportional and scintillation detectors (as appropriate). Large quantities of materials with a low probability of being contaminated (e.g., secondary side plant components) may be released through the analysis of representative samples (as appropriate for the materials being monitored) combined with aggregated waste surveys.

- Smear Samples - Analysis with a Geiger-Mueller, gas proportional, scintillation, and solid state detector (as appropriate).

- Bulk Liquids or Solids - Analysis with high resolution gamma spectrometry system to the environmental lower limit of detection. Large quantities of materials (e.g., excavated soils) may be released through the analysis of representative samples combined with surveys of the aggregated wastes (e.g., dumpsters).

Materials will be released if no discernable plant-related activity is detected within the capability of the survey methods presented above. Any radioactive material that is shipped from the site is handled in accordance with an operating plant procedure which ensures compliance with NRC and Department of Transportation requirements.

An administrative plant procedure provides instructions regarding the proper handling and storage of contaminated tools and equipment. This procedure ensures that tools and equipment are decontaminated promptly. Tools and equipment that are not fully decontaminated are stored in designated radioactive material storage areas. An operating plant procedure ensures that the areas where radioactive materials are stored are posted clearly.

507.12 Surveillance

Routine radiological surveillances will continue to be conducted during decommissioning to monitor radiation sources, to determine radiological conditions, and to comply with the requirements of 10CFR Part 20. Surveys also will be performed to evaluate radiological conditions in support of decommissioning work activities. Plant procedures will be used to implement the surveys. These procedures specify the types of instrumentation, survey methods, and review requirements for each survey performed.

The final radiation survey that will be completed following decontamination and dismantlement activities is described in the PSDAR.

507.13 Instrumentation

A sufficient inventory and variety of operable and calibrated portable, semi-portable, and fixed radiological instrumentation will be maintained on site to allow for effective measurement and control of radiation exposure and radioactive material and to provide back-up capability for inoperable equipment. Equipment will be capable of measuring the range of gamma, beta, alpha and neutron dose rates and radioactivity concentrations expected. Instrumentation will be calibrated at prescribed intervals or prior to use against certified equipment having known valid relationships to nationally recognized standards. An administrative plant procedure will be used to control the use of radiation protection instrumentation.

507.14 Review and Audit

To ensure the Radiation Protection Program is effectively implemented and maintained, an organized system of reviews and audits will continue to be implemented during decommissioning in accordance with the Quality Assurance Program presented in Section 514.

507.15 Radiation Protection Program Performance Analysis

An administrative plant procedure will be used during decommissioning to evaluate the causes of unacceptable performance, to initiate corrective actions, and to trend overall performance. This process will be used to address the following types of deficiencies:

- Work activities generating unnecessary radiation exposure or contamination.
- Procedural actions resulting in unacceptable radiological performance.
- Unacceptable radiological work practices resulting in personnel contamination, spread of contamination, or unnecessary radiation exposure.
- Activities resulting in unnecessary generation of liquid or solid radioactive waste.
- Activities violating Radiation Work Permit instructions, postings, signs, and radiation protection implementing procedures.

Incidents that result in more serious radiological events will be reported using the same administrative plant procedure. These events include overexposures, large intakes of radioactive material, unplanned radioactive releases and significant radioactive spills. This procedure ensures that immediate and written notifications are made in accordance with regulatory requirements.

REFERENCES

507-1 NYR 91-097, Systematic Assessment of Licensee Performance (SALP) Final Report for Yankee Nuclear Power Station for the Period August 1, 1989 to January 15, 1991 (50-29/89-99), T. T. Martin (USNRC) to A. C. Kadak, May 20, 1991.

507-2 Regulatory Guide 8.8, Information Relevant to Ensuring That Occupational Radiation Exposure at Nuclear Power Stations Will Be As Low As Is Reasonably Achievable.

507-3 Regulatory Guide 8.10, Operating Philosophy For Maintaining Occupational Radiation Exposure As Low As Is Reasonably Achievable.

507-4 Regulatory Guide 1.8, Personnel Selection and Training.

507-5 NRC IE Circular No. 81-07: "Control of Radioactively Contaminated Material," May 14, 1981.

507-6 NRC IE Information Notice No. 85-92: "Surveys of Wastes Before Disposal From Nuclear Reactor Facilities," December 2, 1985.

507-7 Off-Site Dose Calculation Manual.

508 RADIOACTIVE WASTE MANAGEMENT

YNPS decommissioning requires handling of a large volume of radioactive materials to reduce residual radioactivity to a level permitting release of the site for unrestricted use and termination of license. Materials that are not decontaminated and released will be processed as radioactive waste. This section of the FSAR presents the programs used to control the processing of solid, liquid and gaseous radioactive waste.

YAEC will continue to ensure appropriate processing, packaging and monitoring of solid, liquid and gaseous wastes during decommissioning by implementing the Radiation Protection procedures, the Process Control Program, the Radioactive Effluent Controls Program and the Radiological Environmental Monitoring Program. These programs will be maintained in compliance with YDQAP requirements to meet federal and state regulations, disposal site requirements, and any other applicable requirements. The YNPS radioactive waste management program is implemented through the Radiation Protection Program (Section 507). Implementing procedures will be used to control the classification, treatment, packaging and shipment of radioactive material.

508.1 Solid Radioactive Waste Processing

Solid radioactive waste handling at YNPS is divided into three phases: packaging, on-site storage awaiting shipment and shipment. Each of these phases will be implemented in strict compliance with applicable federal, state, disposal site and offsite processing facility requirements. In addition, all waste processing activities will be completed in accordance with the requirements of the Yankee Decommissioning Quality Assurance Program (Section 514), PCP and ODCM.

YNPS decommissioning solid waste is comprised of both high and low level radioactive waste. A portion of the reactor vessel internal components (e.g., core baffle) have radionuclide concentrations in excess of the 10CFR Part 61 Class C limits. These materials are not generally acceptable for near-surface disposal and have been classified as high level radioactive waste. High level radioactive waste will be stored with the fuel and will be shipped to an appropriate disposal facility after a location becomes available.

508.1.1 Solid Radioactive Waste Packaging

Radioactive waste packaging at YNPS will be performed in areas that minimize radiation exposure to personnel, control the spread of contamination, and are adequate for packaging activities. Temporary facilities, that meet the requirements above, may be constructed for waste packaging.

Radioactive waste packaging operations will be implemented through plant procedures that ensure the following:

- A Radiation Work Permit has been issued for handling radioactive materials.
- Specific packaging requirements are identified.

- Containers are surveyed for external contamination.

Personnel will conduct inspection activities in accordance with the requirements of the Yankee Decommissioning Quality Assurance Program (Section 514).

Waste packages will meet the requirements for transportation and disposal or processing for each decommissioning waste stream. Examples of the waste containers that may be used are drums, boxes, liners, high integrity containers, sea-land containers, shielded casks, and other specialty containers such as intermodals. Waste container selection will be determined by the size, weight, classification, and activity level of the material to be packaged. In all cases, packaging will comply with requirements specified by 49CFR, 10CFR Part 71, and the disposal or processing facility site criteria, as applicable.

A plant procedure provides instructions for determining the 10CFR Part 61 classification of low level radioactive waste. The procedure is used to determine the radionuclide content of a container through a combination of direct measurements and/or radiation shielding calculations.

Spent resins, filter media and other wetted wastes requiring stabilization will be processed in accordance with the Process Control Program (Reference 508-4), which is implemented through plant procedures. Whenever possible, stabilization will be completed inside the disposal package or liner to minimize additional waste handling prior to disposal.

508.1.2 Solid Radioactive Waste Storage Awaiting Shipment

Solid radioactive waste awaiting shipment to a facility for disposal or processing normally will be stored in accordance with applicable regulations.

Supplemental shielding may be used to shield waste containers to assure that exposure rates are maintained as low as is reasonably achievable.

Stored waste will be inspected to assure that container integrity is maintained. The inspections will include visual inspections of a representative sample of containers for container integrity.

Radioactive materials will be stored such that in the event of a fire or an explosion, sufficient fire detection, response, and suppression capability in conjunction with spatial separation will ensure that any radiological release would be bounded by the accident analyses presented in Section 400.

Large components awaiting shipment may be stored in the Yard Area prior to shipment. Precautions will be taken to ensure that the components are within barriers, as necessary, and adequately protected from on-site hazards (e.g., heavy load movement).

508.1.3 Solid Radioactive Waste Shipment

Solid radioactive wastes will be shipped in compliance with applicable federal and state regulations. Operating plant procedures present the requirements for radioactive materials shipment. These procedures ensure the following:

- Appropriate labeling and documentation of shipping containers.
- Quality assurance oversight of shipment preparation.
- Verification of acceptable package physical condition and contamination levels.
- Appropriate permits and licenses for waste shipment.
- Notification of appropriate governmental agencies prior to shipment.

Most of the radioactive material and waste shipments will be completed over roads. Rail transportation may be used for shipments of demolition rubble. Material will be transferred by highway to an acceptable rail shipping facility. The routing of shipments may vary with weather and highway conditions. Additionally, local and state restrictions pertaining to radioactive material transport may affect some route selections. The carrier is responsible for selecting the appropriate route, which must conform to applicable federal, state, and local shipping requirements and be in accordance with Department of Transportation and NRC regulations.

508.2 Liquid Radioactive Waste Processing

Contaminated water will be generated during YNPS decommissioning as a result of draining, decontamination and cutting processes. The contaminated liquids will be processed in a temporary system (e.g., ion exchange and filtration system, solidification system). All liquid radioactive waste will be processed in accordance with the Process Control Program, the Off-Site Dose Calculation Manual (ODCM), Yankee Decommissioning Quality Assurance Program (YDQAP) and plant procedures.

The Process Control Program presents the administrative and technical controls for the liquid radioactive waste system to assure that waste meets shipment and disposal facility requirements. Liquid waste processing is monitored to assure safe operation, storage and disposal of waste to approved waste disposal sites. Liquids released from the site are monitored and controlled to ensure all releases of radioactivity to the environment are as low as is reasonably achievable. The Process Control Program is maintained in accordance with the YDQAP.

The YDQAP establishes two programs affecting radioactive liquids processing: Radioactive Effluent Controls Program, Radiological Environmental Monitoring Program. The Radioactive Effluent Controls Program conforms with 10CFR50.36a requirements to control radioactive effluents and to maintain dose to members of the public from radioactive effluents as low as is reasonably achievable. This program is presented in the ODCM (Reference 508-5) and implemented through several plant procedures. This program complies with the requirements of the YDQAP.

The ODCM contains methodologies and parameters used in the following:

- Calculation of off-site doses resulting from radioactive gaseous and liquid effluents.
- Calculation of gaseous and liquid effluent monitoring alarm and trip setpoints.
- Conduct of the Radiological Environmental Monitoring Program.

The ODCM forms the basis of plant procedures which document the off-site doses due to plant operation. The off-site dose calculations demonstrate compliance with the numerical guides for design controls of 10CFR Part 50, Appendix I. Several plant procedures implement the ODCM requirements.

508.3 Airborne Radioactive Waste Processing

Dismantlement activities will be designed to ensure that airborne releases are monitored to the maximum extent practicable by implementing the following considerations during detailed planning of decommissioning activities in accordance with the requirements of the ODCM:

- Local HEPA filtration systems will be used when activities could result in the release of significant radioactive particulates. Monitoring of the HEPA Filtration System exhaust will be performed when required by the ODCM. Prior to initial deployment and periodically, each HEPA System is tested against Dioctyl Phthalate (DOP) with an acceptance criterion of 99.95% filter retention. This ensures that airborne particulate releases to the environment have been reduced to as low as is reasonably achievable.

Local supplemental air monitoring will be performed as necessary to support decommissioning activities.

508.4 Mixed Waste

YAEC has a nonradioactive waste management program to ensure compliance with all the federal and state hazardous waste regulatory requirements. The use of hazardous materials and the generation of hazardous wastes are controlled through the nonradioactive hazardous waste management program. This program is presented in Section 511.

YNPS currently has a quantity of mixed waste, including Polychlorinated Biphenyls (PCBs) contaminated material. There are varying quantities of oil and paints.

No chemicals or other substances are anticipated to be used during decommissioning operations that could become mixed waste. If mixed wastes are generated, they will be managed according to Subtitle C of the Resource Conservation and Recovery Act (RCRA) to the extent it is not inconsistent with NRC handling, storage, and transportation regulations.

Mixed wastes from the YNPS will be transported only by authorized and licensed transporters and shipped only to authorized and licensed facilities. If technology, resources, and approved processes are available, processes will be evaluated to render the mixed waste nonhazardous.

YAEC has identified the presence of solid PCBs in some paint coatings, primarily in the Radiation Control Area. As in the cases of radiologically contaminated lead paint, asbestos, and other hazardous materials, contaminated paint that contains PCBs will be managed according to all applicable federal and state regulations.

508.5 Radioactive Waste Minimization

508.5.1 Radioactive Waste Reduction Program

YNPS will continue to implement and enforce a Radioactive Waste Reduction Program through implementation of an administrative plant procedure. YNPS management will monitor waste minimization practices for decommissioning. All decommissioning personnel will receive training in the applicable procedures and practices to minimize the generation of radioactive waste.

All radiation workers entering the Radiation Control Area will receive radiation worker training. This training will include a review of work techniques that prevent unnecessary contamination of areas and equipment, practices for reuse of materials, and policies to prevent the unnecessary generation of mixed or radioactive wastes.

The following radioactive waste volume reduction methods will be incorporated into YNPS decommissioning activities:

- Prevention of Waste - Unnecessary generation of radioactive wastes will be controlled by procedures established to prevent unnecessary packaging, tools, and equipment from entering Radiation Control Area.

- Decontamination and Re-Use of Materials - Materials will be reused to the maximum extent practicable. Typical materials reused during the decommissioning include contaminated tools,

equipment, and clothing. Contaminated tools and equipment storage areas will be maintained. Protective clothing will be laundered offsite and made available for reuse.

Voids in disposal containers will be filled with other contaminated material to reduce the total volume of waste for disposal to the maximum extent practicable. This produces a better waste form, maximizing burial efficiency, and minimizing project cost, disposal site usage, and transportation risk.

508.5.2 On-Site Decontamination Methods

On-site decontamination techniques will be used for processing and volume reduction of radioactive materials. The following are examples of decontamination methods that may be used during decommissioning:

- Strippable Coatings - Strippable coatings may be used to lift radionuclides from contaminated surfaces. A strippable coating is typically applied in a manner similar to spray painting a surface. Additives in the coating are designed to attract and to combine chemically with radioactive contaminants. Once the coating is dry, the contaminant is locked in the coating. The dried coating is easily removed from the surface, stripping the film containing the contamination. The stripped film is packaged and processed as a solid waste. Strippable coating may also be used to protect surfaces from becoming contaminated.

- Chemical or Solvent Decontamination - Chemical and solvent decontamination methods remove contamination by creating a solution of the radionuclides and the solvent used. This type of decontamination may be difficult to control because of the aggressiveness of the chemicals and solvents. However, the systems decontaminated at YNPS will not be returned to service after decontamination, therefore, excessive metal wastage is not significant. Chemicals used for decontamination will be evaluated for hazardous constituents. If the chemical could become a listed or characteristic hazardous mixed waste it will not be used.

- Dry Abrasive Impingement - Dry abrasive impingement is effective for removing heavy or tightly adhering oxide films. Examples of this technology are sandblasting and dry ice blasting.

- Wipe down with Simple Green for Rad/PCB surfaces.

- Concrete scabbling techniques.

- Water Washing - High pressure water washing is effective for removing surface contamination and for sluicing sludge from tanks. Barriers must be established to ensure that wash water is collected and processed in the site liquid waste processing system.

- Vacuum Cleaning - HEPA filtered vacuum cleaners may be used in areas of high loose surface contamination.

508.5.3 Off-Site Radioactive Materials Processing

Several off-site radioactive materials processing options are currently available. The current decommissioning cost estimate (See PSDAR Section) assumes that the availability of processing alternatives is limited and that all significantly contaminated and activated materials are sent to a low level radioactive waste disposal facility. However, all processing alternatives will be evaluated during decommissioning to determine the most effective processing of radioactive materials.

The following are examples of off-site processing alternatives for radioactive materials removed during YNPS decommissioning:

- Decontamination - Decontamination facilities provide a wide range of decontamination technologies at centralized locations. The variety allows selection of appropriate technologies for each component of the decommissioning waste stream.

- Volume Reduction - Volume reduction facilities provide various processes (e.g., sorting, super-compaction) to reduce the volume of material that is sent to the disposal facility. This processing alternative is attractive for asbestos compaction which requires specialized containment during processing.

- Incineration - Incineration facilities safely incinerate materials resulting in very high volume reduction rates. Appropriate materials may include paper, certain plastics, lubricating oils, and solvents.

- Metal Melting - Metal melting materials process low specific activity metals. The processed metal is recycled to the nuclear industry as shielding and potentially in the future as cask liners and fuel canisters.

Waste packages will be transported to off-site facilities primarily in intermodals, rolloffs, and sea-land containers selected to meet transportation and receipt requirements of the off-site processing facility. Voids in transport containers are not a significant concern. However, efficient management of transportation resources is an important consideration to minimize the total number of shipments and decommissioning costs.

Radioactive material control and accountability procedures will be implemented to track material originating from YNPS during receipt, sorting, processing, and packaging for disposal. Off-site processing facilities will be selected that provide adequate radioactive material control and accountability procedures.

508.6 Decommissioning Radioactive Waste Projections

This information has been extracted, updated and relocated to the PSDAR within the FSAR.

REFERENCES

508-1 58-FR-34947, Notification of Spent Fuel Management and Funding Plans By Licensees of Prematurely Shut Down Power Reactors, June 30, 1993.

508-2 YRP 435/92, Spent Nuclear Fuel Storage Study Report and Recommendations, B. W. Holmgren, J. M. Buchheit, R. A. Mellor to J. K. Thayer, October 9, 1992.

508-3 YRP 303/93, Impact of Wet Spent Fuel Storage on Decommissioning, P. A. Rainey to R. A. Mellor, July 15, 1993.

508-4 Yankee Nuclear Power Station Process Control Program.

508-5 Yankee Nuclear Power Station Off-site Dose Calculation Manual.

509 TESTS

Tests are performed to ensure the continuous, safe, and efficient operation of equipment necessary to support the defueled condition. The various types of tests are those conducted in accordance with either YDQAP mandated requirements, governing applicable engineering practices and standards (ASME, IEEE, ISA, etc.), or those based on good engineering judgement and operational experience.

510 OCCUPATIONAL SAFETY PROGRAM

510.1 Introduction

This section provides an overview of the YAEC Occupational Safety Program as provided in YNPS Health and Safety Manual, applicable plant procedures, and approved contractor programs.

510.2 Management Policy Statement

YAEC and its management are committed to the safe decommissioning of YNPS. The primary objective of the Occupational Safety Program is to protect workers and visitors from industrial hazards that have the potential of developing during decommissioning activities. YAEC and its contractors will provide sufficient qualified staff, facilities, and equipment to perform decommissioning in a safe and effective manner. YAEC is committed to compliance with federal and state requirements and to the guidance provided through industry standards and good work practices. The effective implementation of the Occupational Safety Program is the responsibility of all decommissioning personnel.

510.3 Deleted

510.4 YAEC Occupational Safety Program

The YAEC Occupational Safety Program was developed to establish and maintain a safe work place for YAEC workers, contractors, and visitors. The program provides guidelines and procedures to be used to reduce industrial hazards and risks.

The YNPS Health and Safety Manual provides guidelines and requirements which will be incorporated into the detailed decommissioning planning process.

The following areas are discussed in the manual:

- General Information
- Personnel Protection and Safety Equipment
- Work Access and Working Surfaces
- Material Handling and Storage
- Hazardous Substances and Materials
- Hand and Portable Powered Tools and Equipment
- Welding, Cutting, and Brazing
- Electrical Safety
- Fire Prevention
- Motor Vehicles
- Excavation

Additional safety guidelines and instructions are included in procedures .

510.5 Safety Training and Meetings

Safety training is conducted as part of the General Employee Training process, during routine safety meetings, and for job-specific purposes. The safety meetings focus on current safety issues and events as well as providing a forum for workers to ask questions and provide feedback.

511 NONRADIOACTIVE WASTE MANAGEMENT

511.1 Introduction

This section provides an overview of the YAEC Non-radioactive Waste Management Program and applicable plant procedures.

Site materials that are routinely handled as hazardous waste requiring disposal include solvents, oils, and absorbent materials used with these items. Non-routine wastes such as paint containing Polychlorinated Biphenyls (PCBs), mercury, paint, and battery acid are also handled and disposed of through this program. In addition, wastes handled for recycling include fluorescent light bulbs, incandescent light bulbs and batteries which are collected and transported offsite.

511.2 Management Policy Statement

YAEC and its management are committed to the safe decommissioning of YNPS. The primary objective of the YAEC Nonradioactive Waste Management Program is to protect site workers, visitors, and the environment from the potential effects of hazardous materials and waste. YAEC is committed to strict compliance with all federal and state hazardous waste handling and disposal requirements.

511.3 Hazardous Material Management

YAEC is required by the OSHA Hazard Communication Standard (29CFR1910.1200) to provide information to its employees and contractors concerning the hazardous substances to which they may be exposed. Administrative plant procedures were implemented to meet these requirements. General Employee Training was revised to apprise employees and contractors of hazardous materials used at YNPS.

511.4 Hazardous Waste Management

The YAEC Non-radioactive Waste Management Program was established to assure compliance with all the federal and state hazardous waste regulatory requirements. Non-radioactive hazardous wastes from YNPS are transported only by authorized and licensed transporters and shipped only to authorized and licensed disposal facilities.

The hazardous waste management program is implemented through an administrative plant procedure. This procedure provides direction for the handling, temporary storage and preparation for shipment of nonradioactive hazardous waste. Routine preventive and emergency response procedures have been developed for precluding and containing hazardous material incidents.

511.4.1 Above-Ground Fuel Oil Storage Tanks

There are two 275 gallon above-ground oil storage tanks at YNPS: the two Security Diesel Generator fuel oil tanks (TK-76-1 and TK-76-2). In addition, there are several portable mobile and stationary fuel tanks used by the demolition contractor.

These portable tanks will remain in service throughout the dismantlement phase. When no longer required, the tanks will be removed from the site by an authorized and licensed contractor.

511.4.2 Deleted

511.4.3 Waste Oil

Uncontaminated waste oil is and will continue to be stored in drums in the Hazardous Waste Storage Area until disposal.

511.4.4 Deleted

511.4.5 Deleted

511.4.6 Asbestos Containing Materials

Asbestos Containing Material (ACM) has been identified on many plant systems and in most areas and buildings. Historically, asbestos insulating material was replaced with non-asbestos material as a part of maintenance activities that required insulation removal and was labeled accordingly. Decommissioning activities to date have removed the majority of ACM; however, additional decommissioning will remove the remaining systems originally covered with asbestos insulating material. Minor quantities of non-insulation asbestos containing materials, in the form of gaskets and packing, remain present in numerous systems at the plant. A licensed contractor has performed an asbestos survey of all remaining and accessible building materials.

Asbestos material will be removed by a licensed contractor prior to the start of dismantlement activities. Insulating material will be considered to be asbestos material unless marked "NON-ASBESTOS" or subsequent testing determines it not to be asbestos. All asbestos containing materials will be removed and processed in accordance with an administrative plant procedure to ensure compliance with federal and state regulations.

Radiologically contaminated asbestos containing material and non-asbestos material will be disposed of in accordance with the requirements given in Section 508.

511.4.7 Lead-Based and PCB-Containing Paints

Lead-based and PCB-containing paints were used at YNPS to coat many steel components, concrete structures, and carbon steel piping. During the operating life of the paint, some of these paints have been covered with several coats of non-lead or non-PCB based paint.

Controls of the lead-based paint identification and removal process have been implemented to control workers exposure and ensure proper handling of lead materials. Lead-based paints on non-recyclable components (e.g., concrete) are removed, processed, and disposed of by qualified personnel.

Controls of the PCB-containing paint identification, removal, and disposal process have also been implemented. The controls are part of plant programs to manage workers exposure and ensure proper handling of PCB waste. An Alternative Method of Disposal Approval (AMDA) issued by the

U.S. Environmental Protection Agency authorizes management of a specific category of PCB wastes designated as "PCB Bulk Product" wastes.

Work associated with both lead and PCB paints are controlled in accordance with administrative plant procedures.

511.5 Sampling and Remedial Actions

Site structures and environs are evaluated for non-radioactive hazardous materials by appropriate sampling and analytical protocols. Remedial actions are implemented as necessary to meet all federal, state, and local environmental quality requirements.

511.6 Industrial Waste Management

The final dismantlement of YNPS will require the handling and disposal of system and building wastes. These wastes will include non-hazardous materials that were never radiologically contaminated, have been decontaminated to meet release criteria, or material that contains asbestos or other hazardous materials. Non-radioactive non-hazardous wastes are expected to include the following:

- System Piping and Components (e.g., pumps, valves, tanks, non-asbestos insulation, heat exchanges, and supports).
- Duct-Work and Associated Equipment (e.g., ducts, fans, filters, and supports).
- Electrical Systems and Equipment (e.g., cables and trays, conduit, motor control centers, generators, motors, and panels).
- Buildings and Structures (e.g., concrete, structural steel, roofing materials, siding, doors, and windows).

The materials presented above will be processed in accordance with the rules and regulations governing the disposal of non-radioactive, non-hazardous wastes.

511.7 Training

All personnel involved in the handling of hazardous materials and wastes receive initial and annual training. This training includes information on the types of hazardous materials and wastes, handling precautions, temporary storage locations, and emergency response procedures.

512 SECURITY PLAN

512.1 General

After the decision to permanently cease YNPS power operation, YAEC completed a comprehensive review of the security requirements for YNPS. The review incorporated the following:

- Re-evaluation of the design basis threat matrix to determine security needs for a permanently defueled condition.
- Evaluation of the Vital and Access Control Areas to determine the appropriate level of protection for the permanently defueled condition. This analysis reviewed existing safety analyses, the potential consequences of radiological sabotage events and the potential consequences of fuel storage events. The evaluation indicated that nuclear security could be focussed on spent fuel storage.
- Physical survey of the site to determine physical modifications needed to implement a reduced protected zone. Implementation of the recommendations of this survey allowed reduction of the protected area and the implementation of an industrial security zone for most of the plant site.

Based on this evaluation, the security plan was modified creating a YNPS Defueled Security Plan (References 512-1 and 512-2). The NRC approved the plan and on December 18, 1992, the plan was implemented by YNPS (Reference 512-3). The Defueled Security Plan reduced the protected area boundary to the Spent Fuel Pit Building outside wall. The area that was within the original protected area boundary (with the exception of the spent fuel complex) was reclassified as an industrial security area. An administrative plant procedure identifies individuals responsible for the management of the security program and for the supervision of the security force.

The NRC has inspected the implementation of the Defueled Security Plan to ensure that the changes had been implemented satisfactorily (Reference 512-4). The inspection concluded that the plan, "as implemented, was directed toward the protection of public health and safety."

To complete the plant decommissioning process, the spent nuclear fuel was removed from the Spent Fuel Pit. YAEC constructed an Independent Spent Fuel Storage Installation (ISFSI) onsite and transferred the spent fuel to this location for interim storage until the Department of Energy is ready to accept this fuel. Since YAEC is storing spent fuel under the general license provisions of 10CFR Part 72, Subpart K, YNPS developed an ISFSI Security Plan based on the requirements of 10CFR73.55 with exemptions as appropriate. The YNPS Security Plan amendment submittal (Reference 512-5) requested NRC approval of the ISFSI Security Plan for YNPS and was approved on March 13, 2002 (Reference 512-6). With the transfer of all spent fuel to the YNPS ISFSI, the protected area associated with the Spent Fuel Pit Building has been eliminated.

512.2 Site Access Control

YNPS access control requirements are presented in administrative plant procedures. These procedures present requirements for general site access and access to the protected area (ISFSI).

YNPS will maintain a Fitness For Duty program for personnel granted unescorted access to either the general site area or the protected area. The objective of the program is to provide a drug and alcohol free work environment. The program is essential to maintaining the health and safety of those working on site.

REFERENCES

512-1 BYR 92-077, Defueled Security and Training and Qualification Plans, J. K. Thayer to M. B. Fairtile (USNRC), August 11, 1992.

512-2 BYR 92-102, Defueled Security and Training and Qualification Plans, J. K. Thayer to M. B. Fairtile (USNRC), October 22, 1992.

512-3 NYR 92-194, Exemptions From Certain Requirements of 10CFR73.55 For The Yankee Nuclear Power Station (YNPS) (TAC No. M84267), M. B. Fairtile to J. M. Grant, November 24, 1992.

512-4 NYR 93-027, NRC Inspection No. 50-29/93-03, J. H. Joyner (USNRC) to J. K. Thayer, March 26, 1993.

512-5 BYR 2000-068, Proposed Amendement to YNPS Security Plan, B. Wood (YAEC) to NRC, dated October 12, 2000.

512-6 NYR 2002-023, YNPS – Issuance of Amendment and Exemption from Requirements of 10CFR73.55 (TAC No. MB0209), J. Hickman (NRC) to J. Kay (YAEC), dated March 13, 2002.

513 FIRE PROTECTION

513.1 Program Description

On August 20, 1992, the NRC approved a Technical Specification change to remove the fire protection Technical Specifications (Reference 513-1). The fire protection Technical Specifications were replaced with a set of administrative controls. The Fire Protection Technical Requirements Manual (Reference 513-2) was developed to set forth the operational and surveillance requirements of the Fire Protection Plan as approved by NRC Safety Evaluation Reports dated March 15, 1979, and as supplemented October 1, 1980 and August 27, 1986.

The Fire Protection Plan is based on defense in depth. The plan will maintain the following features, as appropriate, during decommissioning:

- Fire detection equipment and systems.
- Personnel training and qualification program.
- Fire Protection Program procedures.
- Control of transient combustible materials and ignition sources, including limitations on inflammable gases as described in Section 406.

On April 18, 2003, the NRC approved a change to the Fire Protection License condition to reflect that fuel is no longer stored in the Spent Fuel Pit. The condition now allows changes to the Fire Protection Program without NRC approval if the program's effectiveness, taking into account the decommissioning plant conditions and activities, is not reduced (Reference 513-3). Decommissioning activities will be reviewed during the safe storage and dismantlement periods to ensure that the appropriate level of fire protection is being implemented. In addition, fire protection requirements will be evaluated during detailed planning of decommissioning activities.

Administrative plant procedures implement the Fire Protection Plan:

<u>NOTE</u>: On July 29, 2004 the remaining requirements of the Fire Protection Technical Requirements Manual were incorporated into Site Administrative procedures and the manual cancelled.

- Defines the Fire Protection Plan for the YNPS, describes the organization and structure of the fire protection program, and defines the administrative and functional responsibilities of assigned personnel.
- Establishes the administrative controls for materials and events that could create potential fire hazards. Materials and processes, which represent a potential fire hazard, are controlled to minimize the possibility of a fire and the effect of a fire on the following:
  - The release of radioactive material to the environment.
  - Plant personnel safety.
  - Balance of the facility.
- Establishes housekeeping requirements, provides guidelines for hot work, designates fire areas and defines the process for control of combustibles.

513.2 Fire Protection Program Implementation

Continued operability of required fire detection systems ensures that adequate warning capability is available for the prompt detection of fires. This capability is required in order to detect and locate fires in their early stages. On July 6, 2004 the last of the active fire protection systems (ie. fire pumps, hydrant loop, etc.) were removed from service. Based on the advanced state of decommissioning activities, the potential for a serious radiological release that could affect the public or the environment as result of a fire had been eliminated. The onsite incipient fire brigade (utilizing fire extinguishers) is adequate to protect the facility until off-site assistance provided by the Town of Rowe arrives. The Rowe Fire Department is available within a 30-minute response time.

Fire detection capabilities will remain in place to protect those facilities associated with the ISFSI. In addition, spatial separation, and the grouping by activity level will be used to minimize the radiological consequences of a fire in radioactive materials awaiting shipment from the site. Supplemental fire detection and suppression measures may be employed as required.

REFERENCES

513-1 NYR 92-156, Issuance of Amendment No. 142 To Facility Possession Only License No. DPR-3 - Yankee Nuclear Power Station (TAC No. M83746), M. B. Fairtile (USNRC) to J. M. Grant, August 20, 1992.

513-2 Fire Protection Technical Requirements Manual.

513-3 NYR 03-027, J. Hickman (USNRC) to J. Kay (YAEC), Issuance of Amendment 157 RE: Deletion of Operational and Administrative Requirements Following Fuel Transfer to ISFSI, April 18, 2003.

514 DECOMMISSIONING QUALITY ASSURANCE PROGRAM

514.1 Description

Yankee Atomic Electric Company (YAEC) has developed and implemented a comprehensive Quality Assurance Program to assure conformance with established regulatory requirements set forth by the Nuclear Regulatory Commission (NRC) and accepted industry standards. The participants in the Yankee Decommissioning Quality Assurance Program (YDQAP) assure that the storage of spent fuel and the decommissioning of the Yankee Nuclear Power Station are performed in a safe and effective manner. All remaining applicable operational and administrative requirements that were contained in the YNPS Defueled Technical Specifications have been relocated to the YDQAP (Reference 514-5).

The YDQAP complies with the requirements set forth in Appendix B of 10CFR Part 50, along with applicable sections of the Updated Final Safety Analysis Report (UFSAR) for the license application, and is responsive to Regulatory Guide 1.70.

The YDQAP is also established, maintained and executed to comply with the requirements of 10CFR71, Subpart H, and 10CFR72, Subpart G for the storage and transportation of spent nuclear fuel and high level waste under the provisions of a General License contained in these parts.

The YDQAP is submitted periodically to the NRC in accordance with 10CFR50.54(a).

REFERENCES

514-1 License No. DPR-3 - Yankee Nuclear Power Station

514-2 YDQAP; Yankee Decommissioning Quality Assurance Program

514-3 10CFR Part 50 Appendix B; Quality Assurance Criteria for Nuclear Power Plants and Fuel Reprocessing Plants

514-4 NRC Inspection and Enforcement Manual, Chapter 2561; Reactor Inspection Program - Post-Operational Phase

514-5 NYR 03-027, J. Hickman (USNRC) to J. Kay (YAEC), Issuance of Amendment #157 RE: Deletion of Operational and Administrative Requirements Following Fuel Transfer to ISFSI, April 18, 2003.

515 EMERGENCY PLAN

The Defueled Emergency Plan for YNPS was approved by the NRC and issued on October 30, 1992. With the completion of the campaign to remove all spent nuclear fuel and GTCC waste from the Spent Fuel Pool and transfer to the Independent Spent Fuel Storage Installation (ISFSI) and due to the advanced state of decommissioning (demolition of plant SSCs, reduction of source term), there are no longer any events (radiological or non-radiological) that could occur at the site outside of the ISFSI that could cause activation of the Defueled Emergency Plan. Therefore on March 3, 2005 a revision to the Emergency Plan was issued which eliminated all facets of the Plan not related to the ISFSI. The Plan was re-titled ISFSI Emergency Plan.

The ISFSI Emergency Plan is implemented through the use of Emergency Implementing Procedures which are referenced in Appendix B of the Plan. The ISFSI Emergency Plan is formally audited as part of the Quality Assurance Program.

APPENDIX A

Plant Drawings

APPENDIX A

Plant Drawings

Drawing No.*	Title	Page
9699-FE-1P	One Line Diagram Mass Electric Line	A-4
9699-FE-1Q	One Line Diagram Distribution Panel D-1	A-5
9699-FY-6A	Plot Plan	A-15

*Note date of last revision; subsequent revisions may have occurred since printing of FSAR.

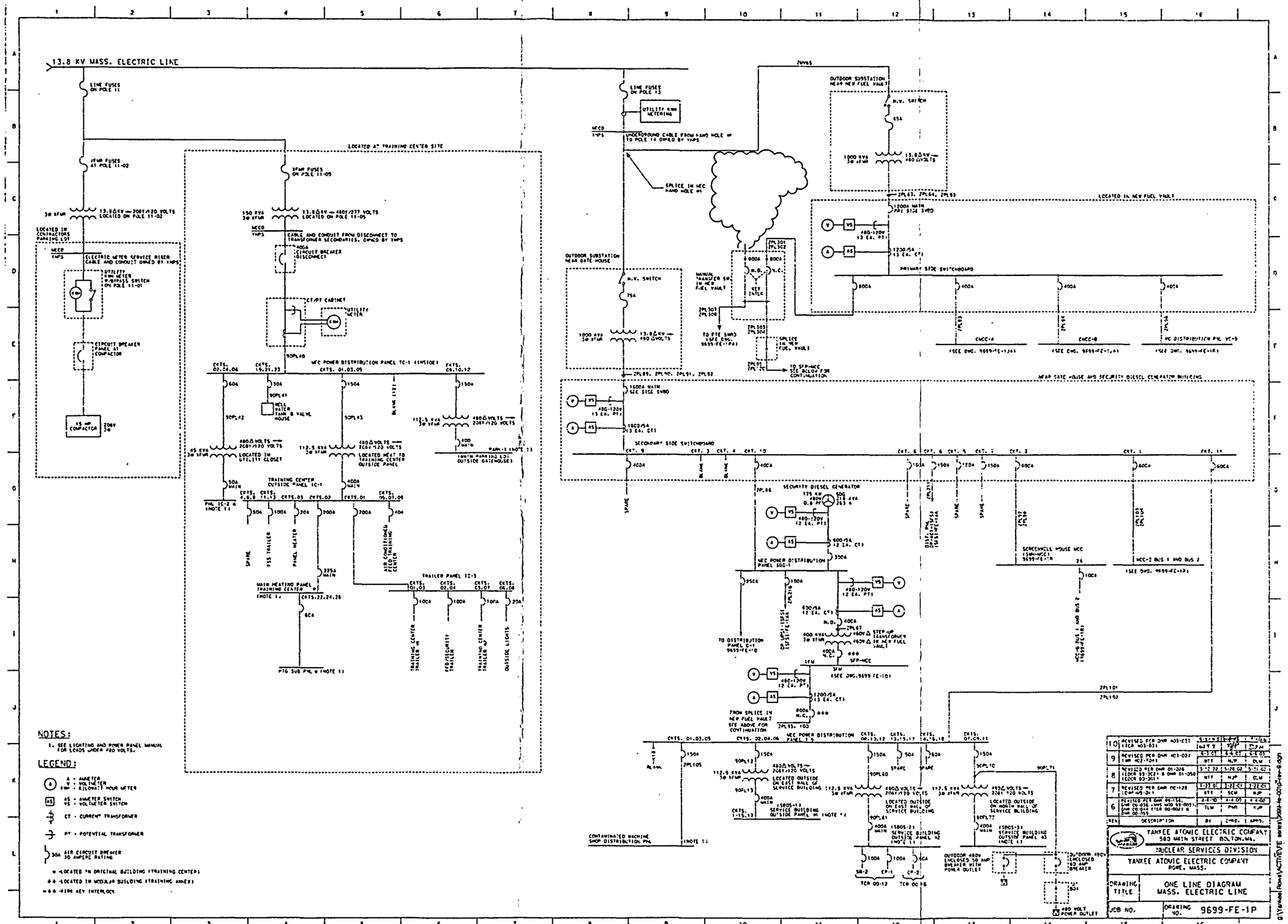
13.8 KV MASS. ELECTRIC LINE
LINE FUSES ON POLE 11
3FWR FUSES AT POLE 11-02
3Ø 3FWR
13.8ΔKV — 208Y/120 VOLTS LOCATED ON POLE 11-02
LOCATED IN CONTRACTORS PARKING LOT
NECO YMPS
ELECTRIC METER SERVICE RISER CABLE AND CONDUIT OWNED BY YMPS
UTILITY KWH METER W/BYPASS SWITCH ON POLE 11-01
CIRCUIT BREAKER PANEL AT COMPACTOR
15 HP COMPACTOR
208Y 3Ø
LOCATED AT TRAINING CENTER SITE
3FWR FUSES ON POLE 11-05
150 KVA 3Ø 3FWR
13.8ΔKV — 480Y/277 VOLTS LOCATED ON POLE 11-05
CABLE AND CONDUIT FROM DISCONNECT TO TRANSFORMER SECONDARIES, OWNED BY YMPS
400A CIRCUIT BREAKER DISCONNECT
CT/PT CABINET
UTILITY METER
90PL40
NEC POWER DISTRIBUTION PANEL TC-1 (INSIDE)
CKTS. 02,04,06
CKTS. 19,21,23
CKTS. 01,03,05
CKTS. 08,10,12
60A
30A
150A
90PL41
WELL WATER TANK & VALVE HOUSE
90PL42
90PL43
BLANK (12)
112.5 KVA 3Ø 3FWR
480ΔVOLTS — 208Y/120 VOLTS
400 MAIN
PARK-1 (NOTE 1)
(MAIN PARKING LOT OUTSIDE GATEHOUSE)
45 KVA 3Ø 3FWR
LOCATED IN UTILITY CLOSET
LOCATED NEAT TO TRAINING CENTER OUTSIDE PANEL
TRAINING CENTER OUTSIDE PANEL TC-1
50A MAIN
400A MAIN
PNL TC-2 (NOTE 1)
CKTS. 4,6,8
CKTS. 11,13
CKTS.03
CKTS.02
CKTS.01
CKTS. 05,07,09
50A
100A
20A
200A
200A
40A
SPARE
FSS TRAILER
PANEL HEATER
FIRE CONDITIONED PACKAGING CENTER
225A MAIN
MAIN HEATING PANEL TRAINING CENTER
(NOTE 1)
CKTS.22,24,26
60A
MTG SUB PNL (NOTE 1)
TRAILER PANEL TC-3
CKTS. 01,03
CKTS. 07,09
CKTS. 05,07
CKTS. 06,08
100A
100A
100A
25A
TRAINING CENTER TRAILER #1
FFD/SECURITY TRAILER
TRAINING CENTER TRAILER #2
OUTSIDE LIGHTS
LINE FUSES ON POLE 13
UTILITY KWH METERING
NECO YMPS
UNDERGROUND CABLE FROM HAND HOLE #1 TO POLE 14 OWNED BY YMPS
SPLICE IN NEC HAND HOLE #1
OUTDOOR SUBSTATION NEAR GATE HOUSE
H.V. SWITCH
75A
1000 KVA 3Ø 3FWR
13.8ΔKV — 480ΔVOLTS
ZPL89, ZPL90, ZPL91, ZPL92
1600A MAIN SEC SIDE SWBD
480-120V 13 EA. PT
1500/5A 13 EA. CT
SECONDARY SIDE SWITCHBOARD
CKT. 9
CKT. 3
CKT. 4
CKT. 10
CKT. 8
CKT. 6
CKT. 5
CKT. 1
CKT. 2
CKT. 1
CKT. 11
400A
BLANK
BLANK
400A
SPARE
SPARE
150A
150A
150A
60A
60A
60A
ZPL86
SECURITY DIESEL GENERATOR
175 KW 480V 0.8 PF 263 A
480-120V 12 EA. PT
600/5A 12 EA. CT
NEC POWER DISTRIBUTION PANEL SDG-1
350A
25CA
100A
480-120V 12 EA. PT
600/5A 12 EA. CT
N.O.
40CA
ZPL67
400 KVA 3Ø 3FWR
460V Δ STEP-UP TRANSFORMER IN NEW FUEL VAULT
460V Δ
400A N.C.
SFP-NCC
1FW
3FW
(SEE DWG.9699 FE-101)
TO DISTRIBUTION PANEL D-1 9699-FE-10
480-120V 12 EA. PT
1200/5A 13 EA. CT
FROM SPLICE IN NEW FUEL VAULT SEE ABOVE FOR CONTINUATION
800A N.C.
ZPL95, 103
ZPL101
ZPL102
NEC POWER DISTRIBUTION PANEL 1-3
CKTS. 01,03,05
CKTS. 02,04,06
CKTS. 08,10,12
CKTS. 13,15,17
CKTS. 14,16,18
CKTS. 07,09,11
BLANK
150A
ZPL105
150A
90PL12
480ΔVOLTS — 208Y/120 VOLTS
112.5 KVA 3Ø 3FWR
LOCATED OUTSIDE ON EAST WALL OF SERVICE BUILDING
90PL13
400A MAIN
15BDS-13 SERVICE BUILDING OUTSIDE PANEL #1 (NOTE 1)
CKTS. 1-15,17
CONTAMINATED MACHINE SHOP DISTRIBUTION PNL
(NOTE 1)
150A
50A
60A
SPARE
SPARE
150A
90PL60
90PL70
112.5 KVA 3Ø 3FWR
480ΔVOLTS — 208Y/120 VOLTS
LOCATED OUTSIDE ON EAST WALL OF SERVICE BUILDING
90PL61
400A MAIN
15BDS-21 SERVICE BUILDING OUTSIDE PANEL #2 (NOTE 1)
112.5 KVA 3Ø 3FWR
480ΔVOLTS — 208Y/120 VOLTS
LOCATED OUTSIDE ON NORTH WALL OF SERVICE BUILDING
90PL72
400A MAIN
15BDS-31 SERVICE BUILDING OUTSIDE PANEL #3 (NOTE 1)
100A
100A
40A
SB-2
CP-1
CP-2
TCR 00-12
TCR 00-16
OUTDOOR 480V ENCLOSED 50 AMP BREAKER WITH POWER OUTLET
OUTDOOR 480V ENCLOSED 60 AMP BREAKER
480 VOLT POWER OUTLET
OUTDOOR SUBSTATION NEAR NEW FUEL VAULT
H.V. SWITCH
65A
1000 KVA 3Ø 3FWR
13.8ΔKV — 480 ΔVOLTS
ZPL83, ZPL84, ZPL93
LOCATED IN NEW FUEL VAULT
1200A MAIN PRI SIDE SWBD
480-120V 13 EA. PT
1200/5A 13 EA. CT
PRIMARY SIDE SWITCHBOARD
800A
400A
400A
400A
MANUAL TRANSFER SW. IN NEW FUEL VAULT
ZPL301 ZPL302
800A
800A
N.O.
N.C.
KEY INTLK
ZPL307 ZPL308
TO FTE SWBD (SEE DWG. 9699-FE-1PA)
ZPL303 ZPL304
SPLICE IN NEW FUEL VAULT
ZPL95 ZPL 96
TO SFP-NCC SEE BELOW FOR CONTINUATION
ZPL33
ZPL34
ZPL35
CMCC-A
CMCC-B
VC DISTRIBUTION PNL VC-5
(SEE DWG. 9699-FE-1PA)
(SEE DWG. 9699-FE-1PA)
(SEE DWG. 9699-FE-1PA)
NEAR GATE HOUSE AND SECURITY DIESEL GENERATOR BUILDING
SCREENHOUSE MOTOR CONTROL CENTER (SWM-MCC) 9699-FE-1R
2A
10A
MCC-2 BUS 1 AND BUS 2
(SEE DWG. 9699-FE-1R)
MCC-2 BUS 1 AND BUS 2 (9699-FE-1R)
NOTES:
1. SEE LIGHTING AND POWER PANEL MANUAL FOR LOADS UNDER 480 VOLTS.
LEGEND:
A - AMMETER
V - VOLTMETER
KWH - KILOWATT HOUR METER
AS - AMMETER SWITCH
VS - VOLTMETER SWITCH
CT - CURRENT TRANSFORMER
PT - POTENTIAL TRANSFORMER
30A AIR CIRCUIT BREAKER 30 AMPERE RATING
* - LOCATED IN ORIGINAL BUILDING (TRAINING CENTER)
** - LOCATED IN MODULAR BUILDING (TRAINING ANNEX)
*** - FIRE KEY INTERLOCK
10 REVISED PER DWR M03-037 (TCR M03-03) — 5-14-03 — 6-4-03 — 6-4-03
9 REVISED PER DWR M03-027 (TWR M03-7043) — 4-7-03 — 4-8-03 — 4-8-03 — WTT — MJP — DLM
8 REVISED PER DWR 01-326 (ECDR 99-309 & DWR 01-050 (ECDR 00-301) — 5-2-02 — 5-28-02 — 5-31-02 — WTT — MJP — DLM
7 REVISED PER DWR 00-128 (ECDR 99-01) — 1-23-01 — 1-23-01 — 2-21-01 — WTT — SCM — MJP
6 REVISED PER DWR 99-154, DWR 00-036, HWS MOD 99-0071, DWR 00-044 (TCR 00-0021 & DWR 00-059 — 4-6-00 — 4-6-00 — 4-6-00 — TLM — PWM — MJP
REV — DESCRIPTION — BY — CHKD. — APPD.
YANKEE ATOMIC ELECTRIC COMPANY 580 MAIN STREET BOLTON, MA.
NUCLEAR SERVICES DIVISION
YANKEE ATOMIC ELECTRIC COMPANY ROWE, MASS.
DRAWING TITLE — ONE LINE DIAGRAM MASS. ELECTRIC LINE
JOB NO.
DRAWING NO. 9699-FE-1P
g:\Yankee\Rowe\ACTIVE\FE series\9699-fe-001P-rev-8.dgn

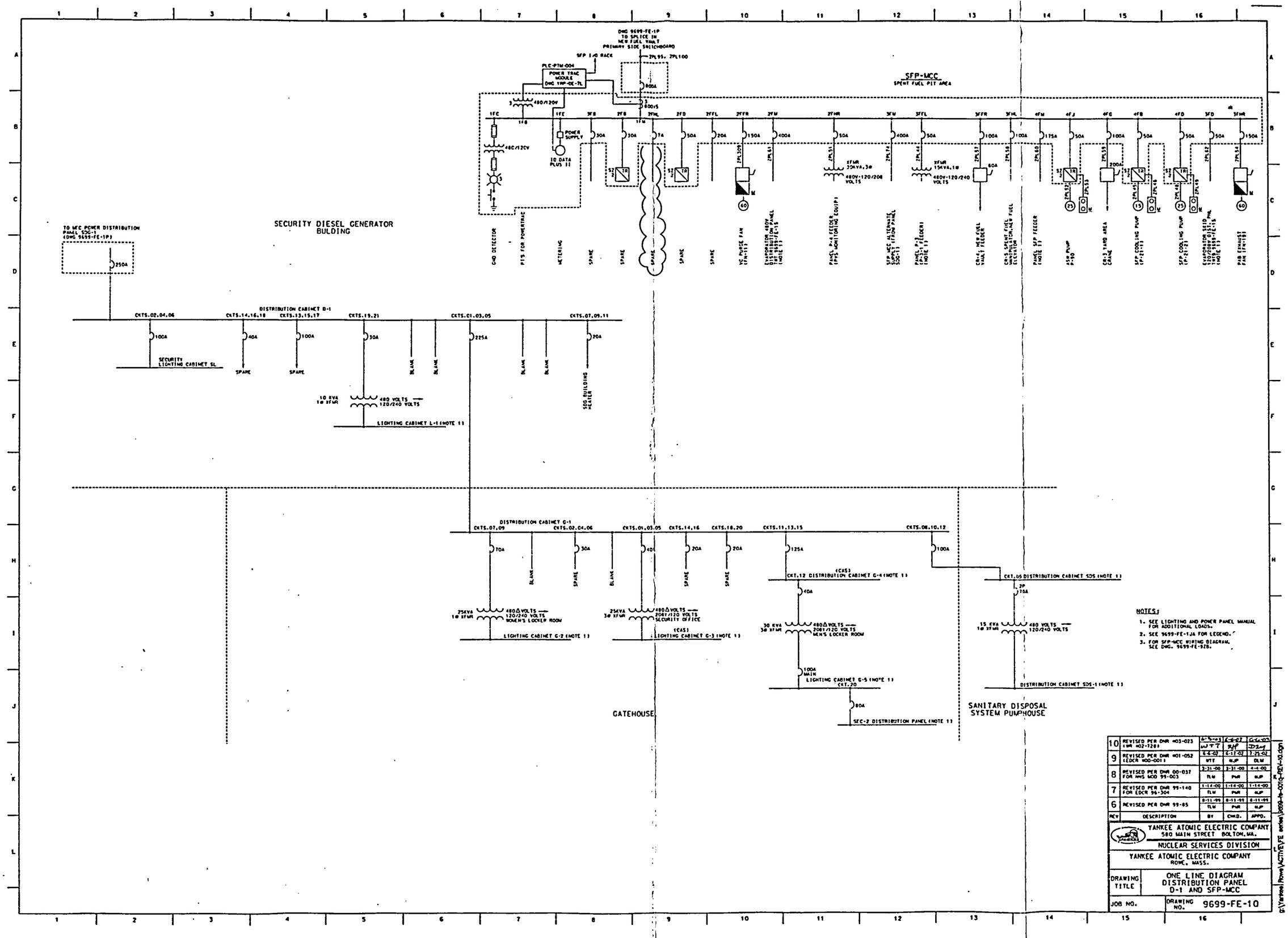

REV	DESCRIPTION	BY	CHKD.	APPD.
10	REVISED PER DWR #03-023 (WR #02-1208)	6-5-03 WTT	6-6-03 RJP	6-6-03 DJM
9	REVISED PER DWR #01-052 (EDCR #00-001)	6-6-02 WTT	6-12-02 WJP	7-25-02 DLM
8	REVISED PER DWR 00-037 FOR NMS MOD 99-003	3-31-00 TLW	3-31-00 PWR	4-4-00 WJP
7	REVISED PER DWR 99-140 FOR EDCR 96-304	1-14-00 TLW	1-14-00 PWR	1-14-00 WJP
6	REVISED PER DWR 99-85	8-11-99 TLW	8-11-99 PWR	8-11-99 WJP

YANKEE ATOMIC ELECTRIC COMPANY
580 MAIN STREET BOLTON, MA.
NUCLEAR SERVICES DIVISION

YANKEE ATOMIC ELECTRIC COMPANY
ROWE, MASS.

DRAWING TITLE: ONE LINE DIAGRAM DISTRIBUTION PANEL D-1 AND SFP-MCC

JOB NO.

DRAWING NO. 9699-FE-10

g:\Yankee\Rowe\ACTIVE\FE series\9699-fe-001\9-FE1-10.dgn

9699-FY-6A

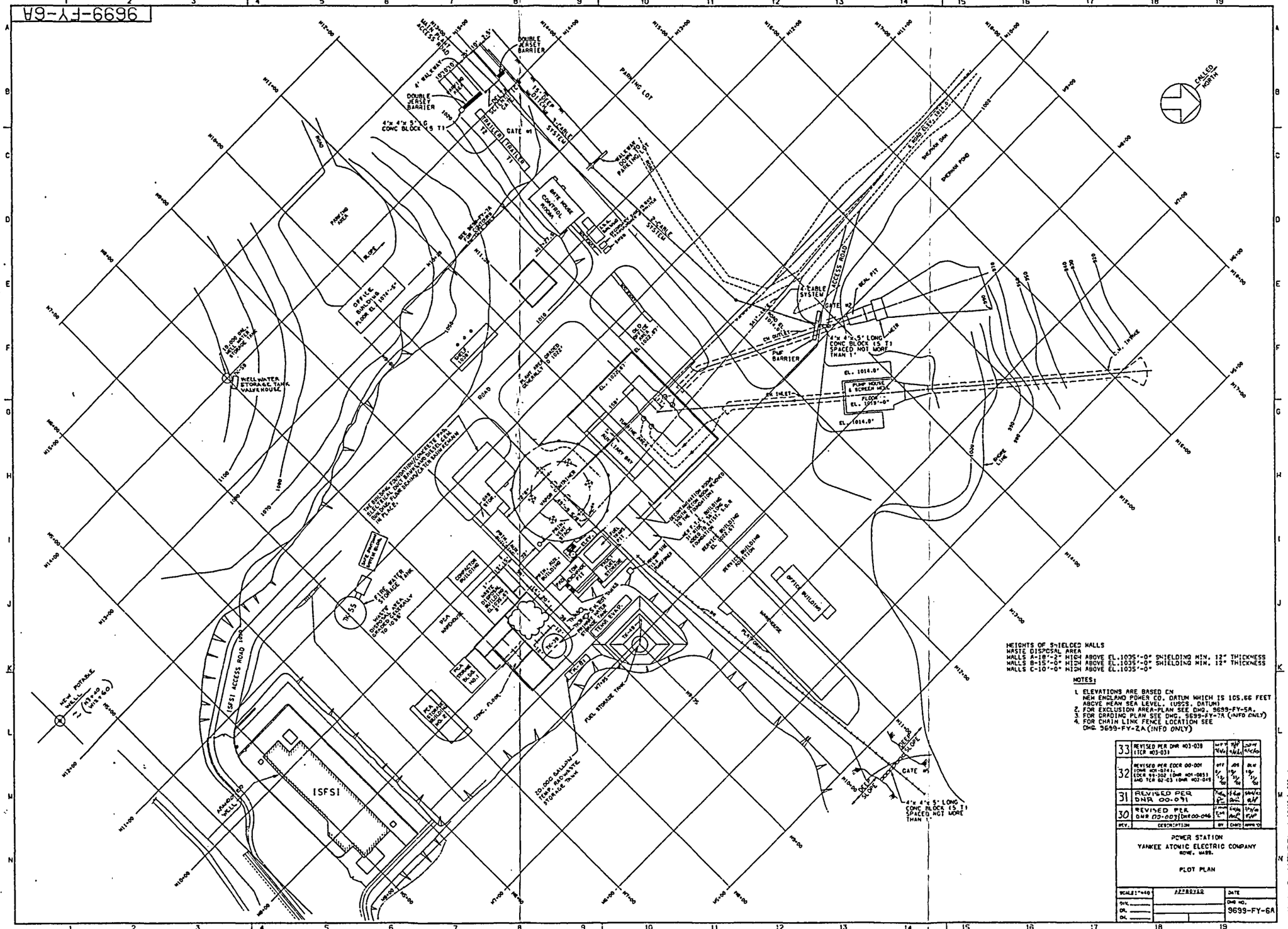

HEIGHTS OF SHIELDED WALLS
WASTE DISPOSAL AREA
WALLS A-18'-2" HIGH ABOVE EL.1035'-0" SHIELDING MIN. 12" THICKNESS
WALLS B-15'-0" HIGH ABOVE EL.1035'-0" SHIELDING MIN. 12" THICKNESS
WALLS C-10'-0" HIGH ABOVE EL.1035'-0"

NOTES:

1. ELEVATIONS ARE BASED ON NEW ENGLAND POWER CO. DATUM WHICH IS 105.66 FEET ABOVE MEAN SEA LEVEL. (USGS. DATUM)
2. FOR EXCLUSION AREA-PLAN SEE DWG. 9699-FY-5A.
3. FOR GRADING PLAN SEE DWG. 9699-FY-7A (INFO ONLY)
4. FOR CHAIN LINK FENCE LOCATION SEE DWG. 9699-FY-2A (INFO ONLY)

REV.	DESCRIPTION	BY	CHKD	APPR'D
33	REVISED PER DNR #03-038 (TCR #03-031)	WFP 7/8/03	WJP 4/4/03	DAP/WF 4/4/03
32	REVISED PER EDCR 00-001 (DNR #00-0343), EDCR 99-102 (DNR #01-0853) AND TCR 02-03 (DNR #02-049)	WFP 5/1/02	JDS 5/1/02	DLW 5/1/02
31	REVISED PER DNR 00-091	7/14/00 DC	7/14/00 DMC	8/4/00 DJP
30	REVISED PER DNR 00-003 (DNR 00-046)	J.Hunter 5/24/00	5/24/00 DMC	5/24/00 FJP

POWER STATION
YANKEE ATOMIC ELECTRIC COMPANY
ROWE, MASS.

PLOT PLAN

SCALE: 1"=40'

APPROVED

DATE

DWG. NO. 9699-FY-6A

g:\Yankee Rowe\ACTIVE\FY series\9699-fy-006.dgn