Appendix A

Spray Pump Pit Survey Design

FirstEnergy

SNEC CALCULATION COVER SHEET

CALCULATION DESCRIPTION

Calculation Number	Revision Number	Effective Date	Page Number
E900-04-015	0	8/12/04	1 of 10

Subject

Spray Pump Pit - Survey Design

Question 1 - Is this calculation defined as "In QA Scope"? Refer to definition 3.5. Yes ☒ No ☐

Question 2 - Is this calculation defined as a "Design Calculation"? Refer to definitions 3.2 and 3.3. Yes ☒ No ☐

Question 3 - Does the calculation have the potential to affect an SSC as described in the USAR? Yes ☐ No ☒

NOTES: If a "Yes" answer is obtained for Question 1, the calculation must meet the requirements of the SNEC Facility Decommissioning Quality Assurance Plan. If a "Yes" answer is obtained for Question 2, the Calculation Originator's immediate supervisor should not review the calculation as the Technical Reviewer. If a "YES" answer is obtained for Question 3, SNEC Management approval is required to implement the calculation. Calculations that do not have the potential to affect SSC's may be implemented by the TR.

DESCRIPTION OF REVISION

APPROVAL SIGNATURES

Calculation Originator	B. Brosey/ B. Brosey	Date	8/11/04
Technical Reviewer	P. Donnachie/ P. Donnachie	Date	8/12/04
Additional Review	A. Paynter/ [illegible]	Date	12 Aug 04
Additional Review		Date	
SNEC Management Approval		Date	

1.0 PURPOSE

1.1 The purpose of this calculation is to develop a survey design for the Spray Pump Pit and Transition area from the Discharge Tunnel. These survey units are listed in Table 1 and are shown in **Attachments 1-1** through **1-6**.

Table 1, Survey Unit Information

Survey Units	Location	Material Types	Area Classification	Area (m^2)
SS9-1	Spray Pump Pit to El. 795' Floor	Concrete	1	51.9
SS25-1	Transition Between SPP & DT	Concrete	1	~41.3
SS25-2	Transition Area Steel Gate	Steel	1	~16*

NOTE: The majority of steel surface area (SS25-2) is severely corroded with portions that are difficult to access. Survey work will encompass only accessible surface areas.

Steel gate is withdrawn into a cavity in the overhead exposing only about ½ the total surface area (estimated to be ~16 m^2).

2.0 SUMMARY OF RESULTS

The following information should be used to develop a survey request for this survey design:

2.1 GFPC Scanning Criteria

2.1.1 A gas flow proportional counter (GFPC) shall be used in the beta detection mode for the initial scan survey work (Ludlum 2350-1 with a 43-68B probe).

2.1.2 All GFPC instruments used shall demonstrate an efficiency (ε_t) at or above ***23.9%*** (value used for planning). Detector efficiency factors are presented in the following Table.

Table 2, GFPC Detection Efficiency Results Used for Planning

Material Type	ε_i	ε_s	ε_t (as %)*	ECF	% Cs-137	Resulting counts/disintegration
Concrete	0.478	0.5	23.9%	0.2	0.982	0.047

*Typical SNEC GFPC detector efficiency factors (as of 7/1/04) are provided in **Attachment 2-1**.

NOTE 1: Total efficiency should not be less than ε_t value for any instrument used during this survey effort.

2.1.3 An efficiency correction factor (ECF) is applied to compensate for efficiency loss over rough surface areas based on **Reference 3.1** criteria and **Attachment 3-1**.

2.1.4 The amount of detectable beta emitter is dependant on the amount of Cs-137 present in the radionuclide mix. From **Attachment 4-1** through **4-6** the mix is determined to be 98.2% Cs-137. No other nuclides are credited with providing any additional (detectable) beta emissions.

Table 3, Summary Of GFPC Scanning Parameters

Area or Structure	Material Type	Scan Speed	Surface to Detector Face	Coverage	MDCscan
SS9-1 & SS25-1	Concrete	0.9" per sec (2.2 cm/sec)	Contact	100%	2,644 dpm/100 cm^2

2.1.5 The action level during first phase scanning is ***350 cpm*** above background. If this level is reached, the surveyor should stop and perform a count of at least ***1/2 minute*** duration to identify the actual second phase count rate from the elevated area. If the second phase count rate is equal to or greater than ***424 cpm***, the area must be identified, bounded and documented to include an area estimate.

2.1.6 Any area that cannot be adequately surveyed with a GFPC, should be identified for NaI scanning IAW Section 2.2.

2.2 NaI Scanning Criteria

2.2.1 A 2" by 2" diameter NaI detector with a Cs-137 window setting shall be used for gamma scanning these survey units IAW Table 4 parameters.

2.2.2 The conversion factor for NaI survey instruments used shall not be less than ***208,302 cpm/mR/h*** (see **Attachment 2-1** for current NaI instrument conversion factors as of 7-1-04).

Table 4, Summary Of Scanning Parameters

Instrument Type Used	Area or Structure	Material Type	Scan Speed	Surface to Detector Face	Coverage	MDCscan*
NaI (2" by 2" Cs-137 Window)	SS9-1 & SS25-1	Concrete	1" per sec (2.54 cm/sec)	2" (5.08 cm)	100 %	2.7 pCi/g
NaI (2" by 2" Cs-137 Window)	SS25-2	Steel	2" per sec (5.08 cm/sec)	2" (5.08 cm)	100%	3,717 dpm/100 cm^2

*See Attachment 5-1 to 5-6 for calculation results using an assumed 100 cpm background value and MicroShield output for modeled survey areas. The steel scan MDC is based on a surface deposition model and the concrete model assumes a 1" thick source term. Both models are ~12" in diameter.

2.2.3 The action level during first phase scanning using a NaI instrument is ***200 gross cpm***. If this level is reached, the surveyor should stop and perform a count of at least 15 seconds duration to identify the actual count rate of the elevated area.

2.2.4 Inaccessible areas, steel surfaces, or any area where a 43-68 beta probe can not be used, shall be scanned using a NaI detector.

2.2.5 Based on NaI scanning work, sample areas IAW the following criteria:

2.2.5.1 When an area is confirmed to be above the action level sited in Section 2.2.3, the location should be marked for sampling (see Section 2.5) These areas shall be bounded and documented, or if no areas are found above the action level,

2.2.5.2 Sample the highest detected count rate area encountered during the NaI scanning process regardless of material type.

2.3 *Fixed Point NaI Measurements*

2.3.1 Perform a one (1) minute count, 2" from the surface of the center of each accessible cell depicted on **Attachment 7-6** (1 through 35). Document all results.

2.4 *DCGLw Values*

The following Table shows the DCGLw values that were used to plan surveys in these areas. Soil volumetric DCGLw values are used as a planning tool.

Areas above the action level should then be sampled to determine the actual concentration and fraction of Table 5 values.

Table 5, Summary Of DCGLw Values

Surface DCGLw (dpm/100 cm^2)	Volumetric DCGLw (pCi/g)
GA = 8,968 (6,726 A.L.)	6.52 (4.89 A.L.) for Cs-137

DCGLw values from Attachment 4.1 to 4-6.
A.L. = the administrative limit.

2.5 *Fixed Point GFPC Static Measurements*

2.5.1 The minimum required number of static survey points for each area is provided in Table 6 (see **Attachment 6-1** to **6-7** for the calculation yielding the minimum No. of random start systematic grid survey points – Compass output).

Table 6, Minimum No. Random Start Systematic Grid Survey Points (GFPC)

Survey Units	Location	Static Points
SS9-1	Spray Pump Pit to El. 795' Floor	13
SS25-1	Transition Between SPP & DT	13

See Attachment 7-1 to 7-5 for locations of fixed point measurements.

2.5.2 VSP (**Reference 3.2**) is used to plot all measurement points on **Attachment 7-1** through **7-5**. The actual number of random start systematically spaced measurement points is greater than that required by the Compass computer code because of any of the following:

- placement of the initial random starting point (edge effects),
- odd shaped diagrams, and/or
- coverage concerns

2.6 *Sampling of Concrete and Steel Surfaces*

Sample concrete or steel materials at locations above action levels when scanning with a NaI detector. (see Section 2.2).

2.6.1 A 4" long core bore sample is preferred so that the depth of penetration can be identified. However, when a core bore cannot be taken because of the quality of the concrete, or because of limited access in an area, sampling should remove the first

1" of concrete and yield a volume of at least ***200 cc*** to ensure an adequate counting MDA for Cs-137 (a 4" diameter area by 1" deep = ~200 cc).

2.6.2 For steel surfaces above the action level, scrape the surface to collect a sample for gamma scanning by removing as much material as possible in the suspect area. Document the approximate size of the area where the materials were removed. Whenever possible, obtain a volume of no less then 25 cc's (200 cc's is preferred).

2.6.3 In general, samples should be collected any location where scanning measurements indicate elevated count rates exist above action levels, or where measurement capability is deemed inadequate due to poor geometry.

3.0 REFERENCES

3.1 SNEC Calculation No. 6900-02-028, GFPC Instrument Efficiency Loss Study.

3.2 Visual Sample Plan, Version 2.0 (or greater), Copyright 2002, Battelle Memorial Institute.

3.3 ISO 7503-1, Evaluation of Surface Contamination, Part 1: Beta-emitters (maximum beta energy greater than 0.15 MeV) and alpha-emitters, 1988.

3.4 SNEC Procedure E900-IMP-4520.06, "Survey Unit Inspection in Support of FSS Design".

3.5 Plan SNEC Facility License Termination Plan.

3.6 SNEC Procedure E900-IMP-4520.04, "Survey Methodology to Support SNEC License Termination".

3.7 SNEC Procedure E900-IMP-4500.59, "Final Site Survey Planning and DQA".

3.8 MicroShield, Computer Radiation Shielding Code, Version 5.05-00121, Grove Engineering.

3.9 NUREG-1507, "Minimum Detectable Concentrations With Typical Radiation Survey Instruments for Various Contaminants and Field Conditions," June 1998.

3.10 NUREG-1575, "Multi-Agency Radiation Survey and Site Investigation Manual", August, 2000.

3.11 Compass Computer Program, Version 1.0.0, Oak Ridge Institute for Science and Education.

3.12 Microsoft Excel 97, Microsoft Corporation Inc., SR-2, 1985-1997.

4.0 ASSUMPTIONS AND BASIC DATA

4.1 Remediation History

This area was cleaned-up (general housekeeping) to remove loose material, sediment and water and prepare the area for FSS. A post remediation type survey was then performed in the area. No remediation was necessary with the exception that materials that could hinder survey work were removed. Since the Spray Pump area moved water from the Discharge Tunnel, the same radionuclide mix is assumed for this area as was used inside the Discharge Tunnel. Because surface water leakage into the Discharge Tunnel could occur from this area, potentially flooding the Discharge Tunnel, a small dam made of concrete was placed across floor at the entrance to this area. This dam will not be removed for survey work unless contamination above the gross activity DCGLw is found on the original structure at or near this location. In addition, a steel gate originally used to cut off the

Discharge Tunnel water flow from the Spray Pump Pit is in its upper most position which does not allow survey of the back side of the gate area. Therefore, only the accessible exposed surfaces will be surveyed.

4.2 Cs-137's detection efficiency has been checked by SNEC personnel using ISO standard 7503-1 methodology (**Reference 3.3**). The SNEC facility uses a conservatively low GFPC efficiency as input to the survey design process.

4.3 Survey unit variability (GFPC only) used to plan the number of fixed point measurement locations, is shown in **Attachment 8-1**. **Attachment 8-2** is the existing variability of the Spray Pump Pit and **Attachment 8-3** is the Williamsburg concrete background results. Since the Transition areas variability is the most significant, it was used to represent both areas.

4.4 An GFPC detector stand-off distance of ~3" is assumed for all areas to compensate for rough surfaces in each survey unit. This factor corrects the overall efficiency by a factor of 0.2 (see **Reference 3.1**), as shown on **Attachment 3-1**.

4.5 The detectors physical probe area is 126 cm^2, and the instrument is calibrated to the same source area for Cs-137. The gross activity DCGLw is taken to be 6,726 dpm/100 cm^2 x (126 cm^2 physical probe area/100 cm^2) = 8,475 x (0.982 disintegration of Cs-137/ disintegration in mix) x ε_i (0.478) x ε_s (0.5) x 0.2 (distance factor) which yields ~398 net cpm above background (Compass calculates 424 ncpm as the gross beta DCGLw). The 0.047 count per disintegration counting efficiency considers only the Cs-137 contaminant present in the sample material matrix, and is calculated by: ε_i (0.478) x ε_s (0.5) x 0.982 disintegration of Cs-137/disintegration in mix x 0.2 (efficiency loss factor due to distance from surface) = ***0.047 cts/disintegration***.

4.6 These survey units were inspected IAW **Reference 3.4**. A copy of portions of the SNEC facility post-remediation inspection report are included (see **Attachment 9-1** to **9-10**). Surface defects (gouges, cracks, etc.), are present within these survey units, yielding a mean rough surface factor of 0.2. Thus the average concentration of the source term will be overestimated for all surfaces (GFPC only).

4.7 MicroShield models containing Cs-137 were developed for this survey design. One slab and one surface model were used to develop NaI scan MDC values (see **Attachment 5-3** and **5-6**):

1) a 1" thick slab of concrete 12" in diameter with a density of 2.35 g/cc. This model assumes that the majority of the activity resides in no more than the first inch of concrete and that elevated areas are small in diameter. These models are based on previous remediation information from other areas within the SSGS facility.

2) a surface deposition of ~12" in diameter to simulate the steel surface area of the gate. A 1/8" layer of Fe_xO_x is assumed to compensate for a heavily corroded steel surface.

4.8 The modeled concentration used was 1 pCi/g or 1 pCi/cm^2 Cs-137, and a full density concrete is assumed for the volumetric model. Then the concentration of Cs-137 in the first model is 2.35g/cc x 1 pCi/g or 2.35E-06 uCi/cc of Cs-137 for slab model, and 1.00E-06 uCi/cm^2 for the surface model. The calculated MDCscan for these two models is shown in the following table for a typical 2" by 2" NaI detector.

Table 7, NaI Scanning Parameters (Cs-137)

Material/Model	Estimated BKGND (cts/min)	MDC_{SCAN}
1" Concrete Slab (2.35 g/cc)	100	**Attachment 5-1 to 5-3 = 2.7 pCi/g**
Surface Deposition	100	**Attachment 5-4 & 5-6 = 3,717 dpm/100 cm²**

See attachment 4-1 to 4-4.

4.9 The results of the MicroShield modeling indicate that an exposure rate of approximately 7.881E-05 mR/h is obtained at a distance of 3" (2" inches from the face of the detector), from the surface of the slab model, and 1.734E-05 mR/h is seen 3 inches from the surface model. Exposure rate is measured to the center of the detector and therefore the air gap between the surface of both models is taken to be 2".

4.10 The majority of the structural surface area is concrete. GFPC measurements of structural concrete are compared to concrete background values (see Williamsburg concrete background values – **Attachment 8-3**).

4.11 The scan MDC calculation is determined based on a 1.38 index of sensitivity at a 95% correct detection probability and 60% false positive rate. In all cases, the scan MDC is less than the gross activity DCGLw for these survey units. A surveyor efficiency factor of 0.5 is assumed.

4.12 No special area characteristics including any additional residual radioactivity (not previously noted during characterization) have been identified in these survey units.

4.13 No special measurements are included for this survey design.

4.14 The applicable SNEC site radionuclides and their associated DCGLw values are listed on Exhibit 1 of this calculation.

4.15 The survey design checklist is listed in Exhibit 2.

4.16 Area factors for Class 1 survey units are shown on **Attachment 6-1**.

4.17 The decision errors and other Data Quality Objectives for this survey design are listed within **Attachment 6-1** through **6-7**, and are justified IAW **Reference 3.5** criteria.

4.18 Analysis results (MDA requirements, etc.) will be IAW **Reference 3.6** criteria.

5.0 CALCULATIONS

5.1 All complex calculations are performed internal to applicable computer codes or within an Excel spreadsheet previously identified.

6.0 APPENDICES

6.1 **Attachment 1-1** to **1-6**, diagrams of Spray Pump Pit area and Transition Area.

6.2 **Attachment 2-1**, is typical calibration information for NaI and GFPC detection systems used at the SNEC facility as of 7-1-04.

6.3 **Attachment 3-1**, is a calculation result for determining efficiency loss for a GFPC detector as a function of distance from a calibration source.

6.4 **Attachment 4-1** to **4-6**, is the DCGL Calculation Logic for the Discharge Tunnel area which is applicable to the Spray Pump Pit and Transition area.

6.5 **Attachment 5-1** to **5-6**, is calculation sheets to determine the scan MDCscan for a NaI detection system using a typical background count rate and a 12" diameter, 1" thick MicroShield slab model, and a ~12" diameter surface deposition model.

6.6 **Attachment 6-1** to **6-7**, are Compass output results.

6.7 **Attachment 7-1** to **7-6**, are the random start, systematic grid diagrams of GFPC fixed point survey locations.

6.8 **Attachment 8-1** and **8-2**, are the GFPC variability measurements from these survey units.

6.8.1 **Attachment 8-3**, are background measurements of concrete using a GFPC instrument in an non-impacted area (Williamsburg).

6.9 **Attachment 9-1** to **9-10**, are sections of survey unit inspection reports for the Spray Pump Pit and Transition Areas.

Exhibit 1

SNEC Facility Individual DCGL Values [a]

Radionuclide	25 mrem/y Limit Surface Area ($dpm/100cm^2$)	25 mrem/y Limit (All Pathways) Open Land Areas (Surface & Subsurface) (pCi/g)	4 mrem/y Goal (Drinking Water) Open Land Areas [b] (Surface & Subsurface) (pCi/g)
Am-241	2.7E+01	9.9	2.3
C-14	3.7E+06	2	5.4
Co-60	7.1E+03	3.5	67
Cs-137	2.8E+04	6.6	397
Eu-152	1.3E+04	10.1	1440
H-3	1.2E+08	132	31.1
Ni-63	1.8E+06	747	1.9E+04
Pu-238	3.0E+01	1.8	0.41
Pu-239	2.8E+01	1.6	0.37
Pu-241	8.8E+02	86	19.8
Sr-90	8.7E+03	1.2	0.61

NOTES:

(a) While drinking water DCGLs will be used by SNEC to meet the drinking water 4 mrem/y goal, only the DCGL values that constitute the 25 mrem/y regulatory limit will be controlled under this LTP and the NRC's approving license amendment.

(b) Listed values are from the subsurface model. These values are the most conservative values between the two models (i.e., surface & subsurface).

Exhibit 2

Survey Design Checklist (From Reference 3.7)

Calculation No. E900-04-015	SS9-1 & SS25-1 & SS25-2		
ITEM	**REVIEW FOCUS**	**Status (Circle One)**	**Reviewer Initials & Date**
1	Has a survey design calculation number been assigned and is a survey design summary description provided?	Yes, N/A	PD 8/12/04
2	Are drawings/diagrams adequate for the subject area (drawings should have compass headings)?	Yes, N/A	PD 8/12/04
3	Are boundaries properly identified and is the survey area classification clearly indicated?	Yes, N/A	PD 8/12/04
4	Has the survey area(s) been properly divided into survey units IAW EXHIBIT 10	Yes, N/A	PD 8/12/04
5	Are physical characteristics of the area/location or system documented?	Yes, N/A	PD 8/12/04
6	Is a remediation effectiveness discussion included?	Yes, N/A	PD 8/12/04
7	Have characterization survey and/or sampling results been converted to units that are comparable to applicable DCGL values?	Yes, N/A	PD 8/12/04
8	Is survey and/or sampling data that was used for determining survey unit variance included?	Yes, N/A	PD 8/12/04
9	Is a description of the background reference areas (or materials) and their survey and/or sampling results included along with a justification for their selection?	Yes, N/A	PD 8/12/04
10	Are applicable survey and/or sampling data that was used to determine variability included?	Yes, N/A	PD 8/12/04
11	Will the condition of the survey area have an impact on the survey design, and has the probable impact been considered in the design?	Yes, N/A	PD 8/12/04
12	Has any special area characteristic including any additional residual radioactivity (not previously noted during characterization) been identified along with its impact on survey design?	Yes, N/A	PD 8/12/04
13	Are all necessary supporting calculations and/or site procedures referenced or included?	Yes, N/A	PD 8/12/04
14	Has an effective DCGLw been identified for the survey unit(s)?	Yes, N/A	PD 8/12/04
15	Was the appropriate $DCGL_{EMC}$ included in the survey design calculation?	Yes, N/A	PD 8/12/04
16	Has the statistical tests that will be used to evaluate the data been identified?	Yes, N/A	PD 8/12/04
17	Has an elevated measurement comparison been performed (Class 1 Area)?	Yes, N/A	PD 8/12/04
18	Has the decision error levels been identified and are the necessary justifications provided?	Yes, N/A	PD 8/12/04
19	Has scan instrumentation been identified along with the assigned scanning methodology?	Yes, N/A	PD 8/12/04
20	Has the scan rate been identified, and is the MDCscan adequate for the survey design?	Yes, N/A	PD 8/12/04
21	Are special measurements e.g., in-situ gamma-ray spectroscopy required under this design, and is the survey methodology, and evaluation methods described?	Yes, N/A	PD 8/12/04
22	Is survey instrumentation calibration data included and are detection sensitivities adequate?	Yes, N/A	PD 8/12/04
23	Have the assigned sample and/or measurement locations been clearly identified on a diagram or CAD drawing of the survey area(s) along with their coordinates?	Yes, N/A	PD 8/12/04
24	Are investigation levels and administrative limits adequate, and are any associated actions clearly indicated?	Yes, N/A	PD 8/12/04
25	For sample analysis, have the required MDA values been determined.?	Yes, N/A	PD 8/12/04
26	Has any special sampling methodology been identified other than provided in Reference 6.3?	Yes, N/A	PD 8/12/04

NOTE: a copy of this completed form or equivalent, shall be included within the survey design calculation.

Spray Pump Pit Class 1 Area

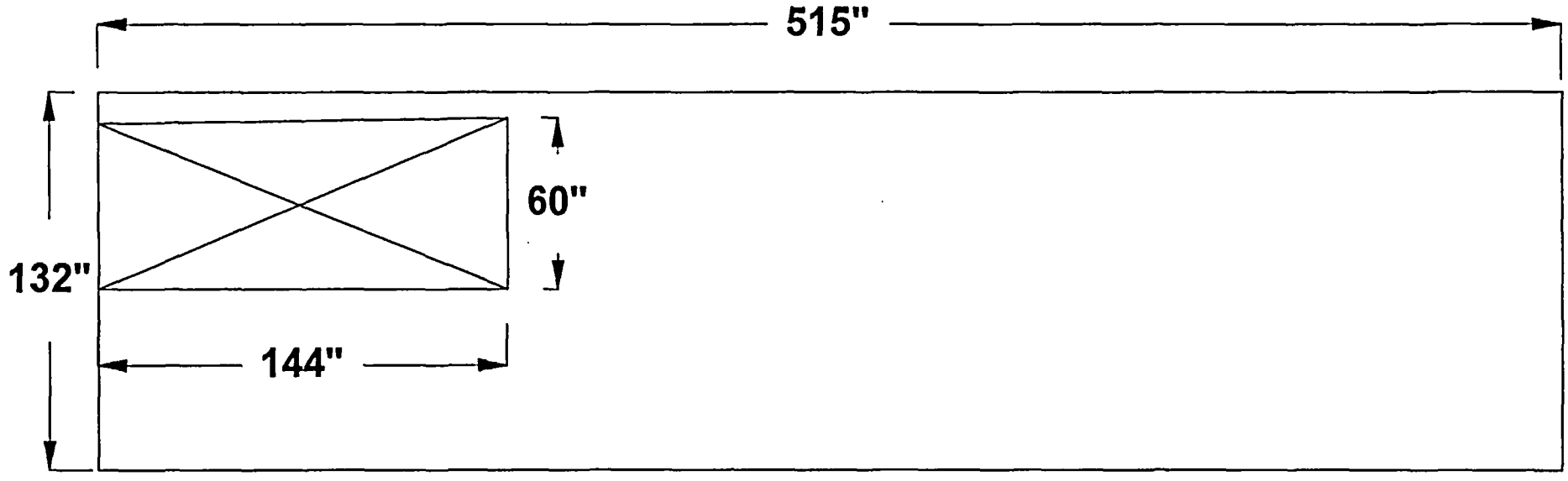

Pit Walls Unfolded

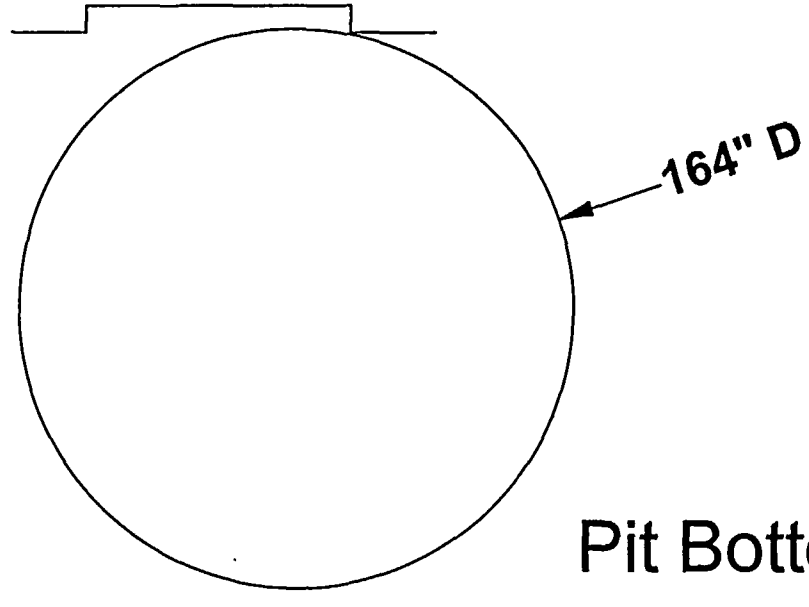

Pit Bottom

ATTACHMENT 1 . 1

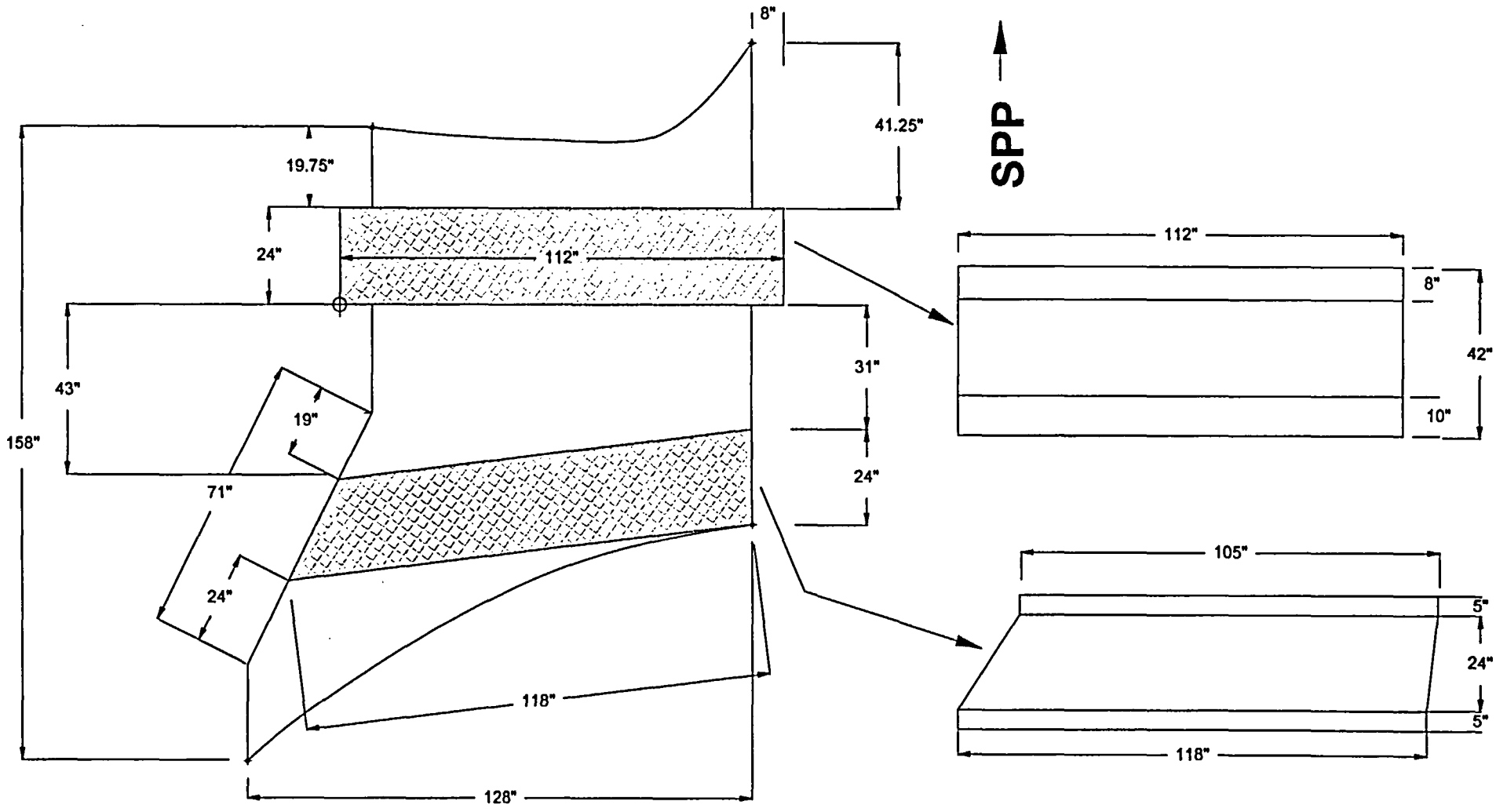

Floor of Transition Area to SPP

ATTACHMENT 1 . 2

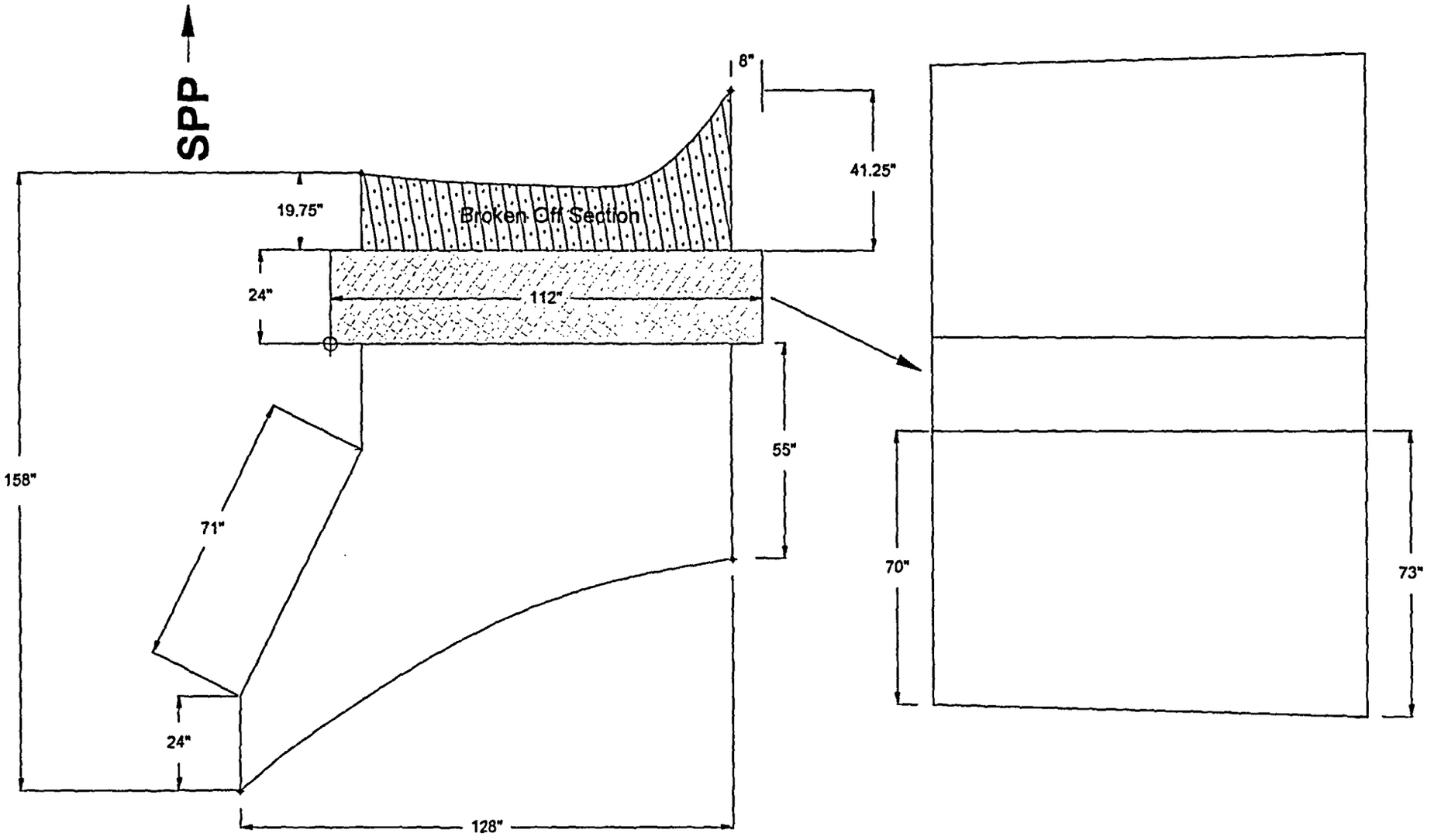

Ceiling of Transition Area to SPP

ATTACHMENT 1 . 3

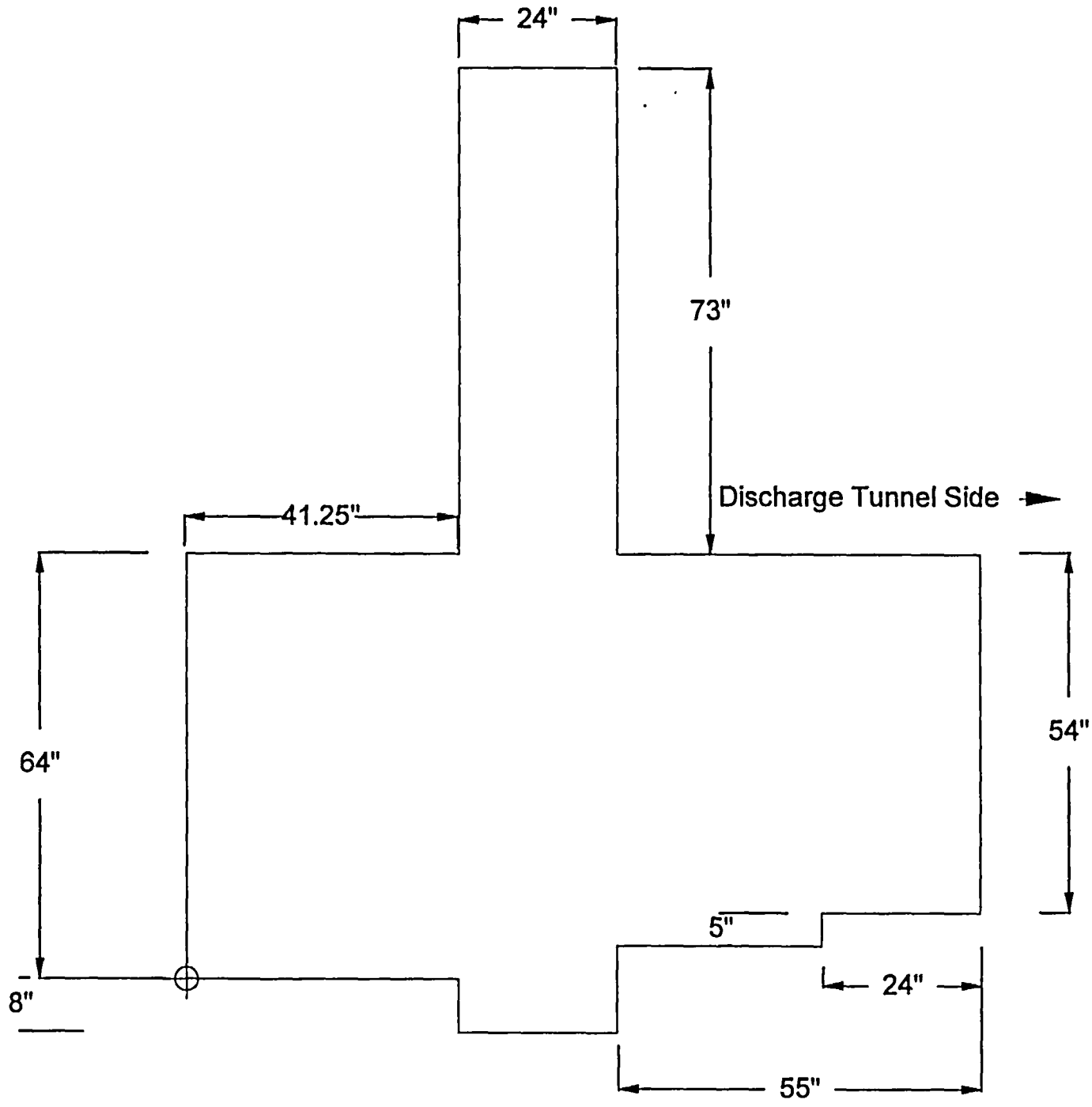

North Wall of Transition Area to SPP

ATTACHMENT 1 - 4

South Wall of Transition Area to SPP

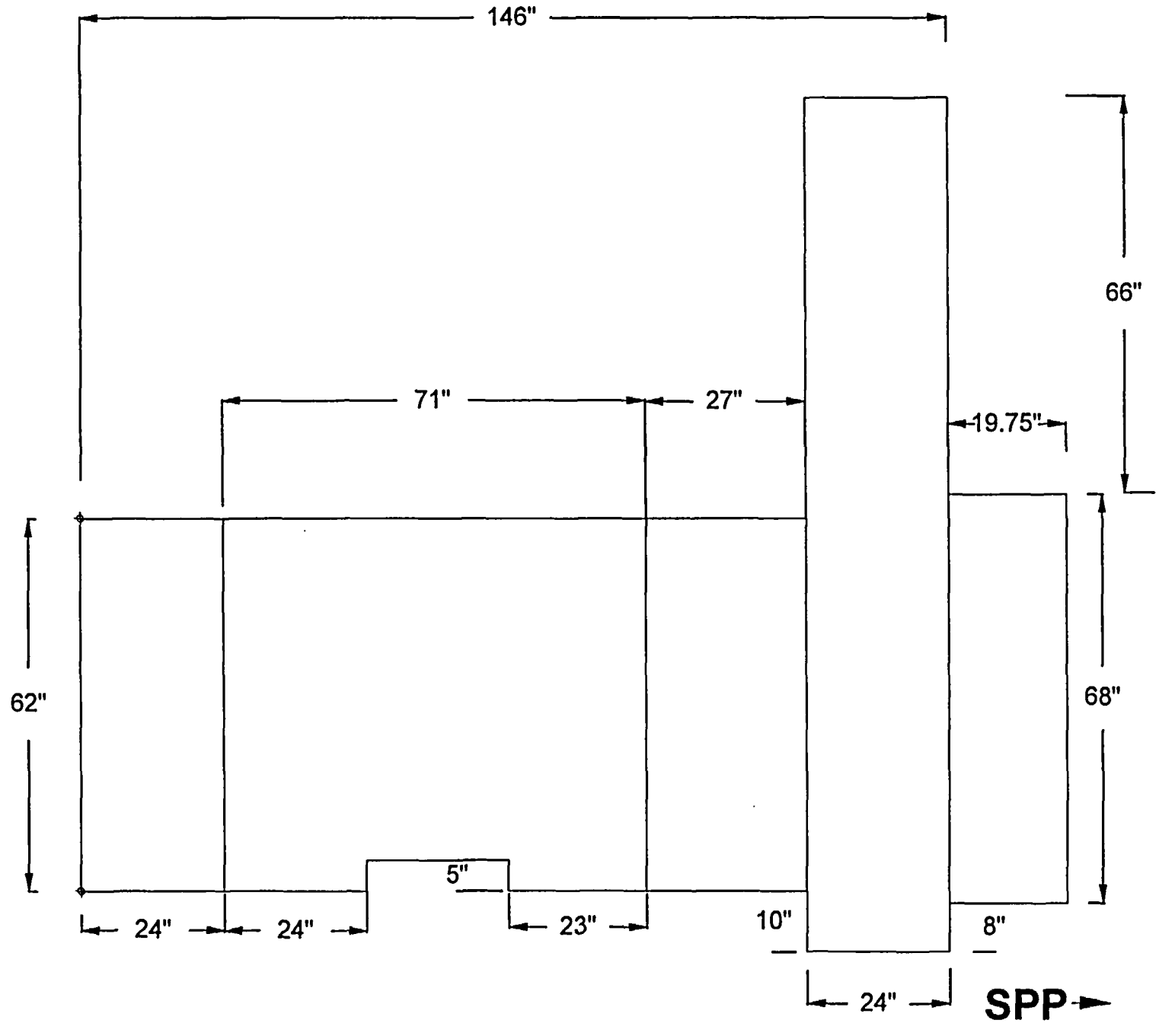

ATTACHMENT 1.5

Exposed Section of Steel Door/Frame

To Spray Pump Pit

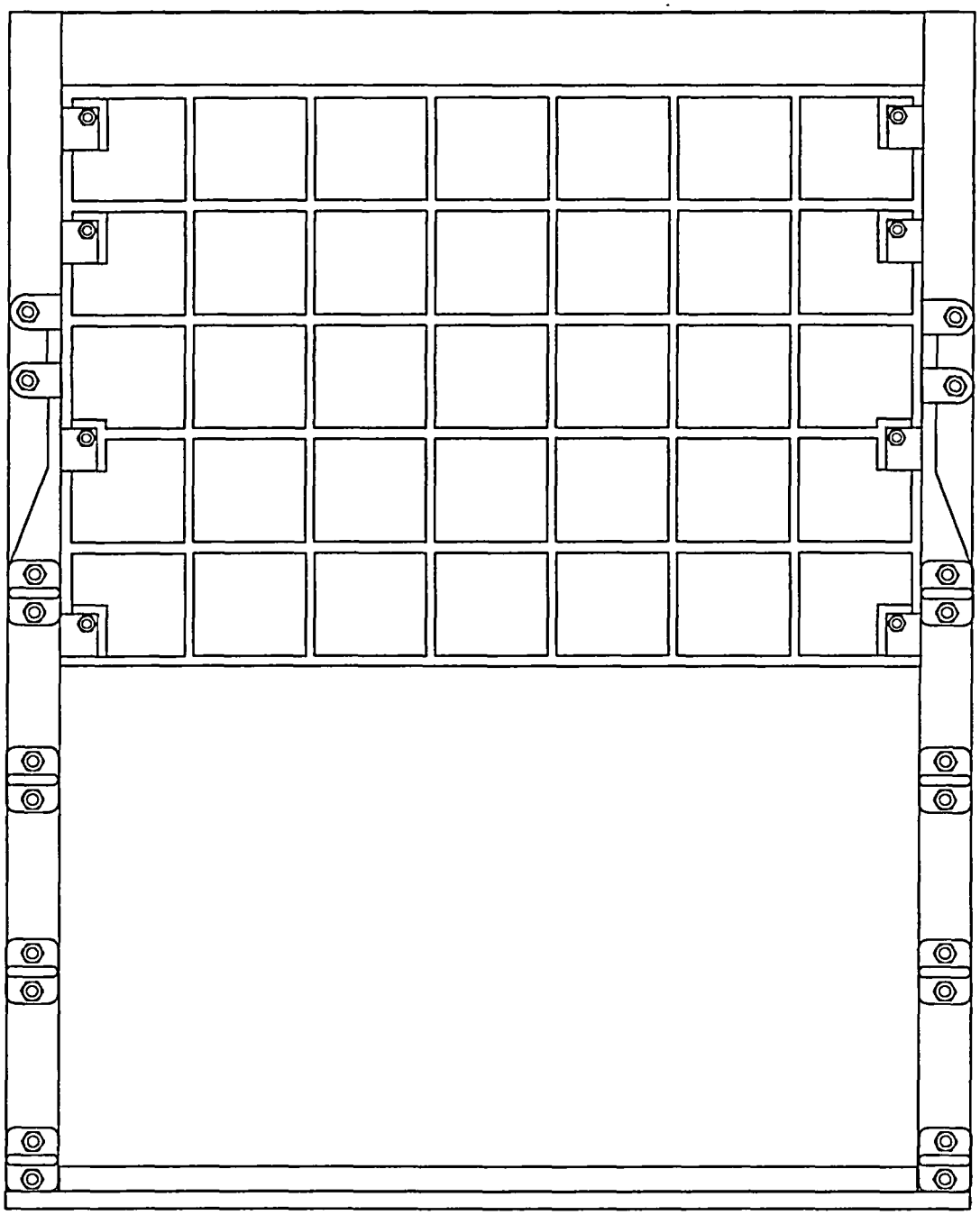

Door - Bottom Edge

Door - Back Edge

ATTACHMENT 1 . 6

2350 INSTRUMENT AND PROBE EFFICIENCY CHART
7/01/04 (Typical 2" by 2" NaI (Cs-137 W) Conversion Factors)

Inst.#	Cal Due	AP #		Probe #	Cal Due	cpm/mR/h
98625	5/18/05	R & Y		211680 Pk	5/18/05	214.882
98647	5/18/05	G &Y		211667 Pk	5/18/05	218.807
129423	5/18/05	P &Y		211687 Pk	5/18/05	213.539
117573	5/18/05	O &Y		211674 Pk	5/18/05	212.173
117566	4/9/05	G&R		185852 Pk	4/13/05	209.862
126183	11/19/04	B&R		206280 Pk	12/12/04	190,907
129429	11/3/04	Y&W		206283 Pk	10/31/04	177185
126198	11/03/04	R&W		196021Pk	5/25/05	209.194
126172	6/07/05	G&W		196022	6/07/05	208.302
129440	4/09/05	O&W		210938 Pk	4/14/05	205.603
120588	6/08/05	B&W		185844 Pk	6/09/05	216.654
95361	6/25/05	P&W		025686	6/28/05	211.799

ATTACHMENT 2.1

2350 INSTRUMENT AND PROBE EFFICIENCY CHART
7/01/04 (Typical 43-68 Beta Efficiency Factors)

Different Instrument/Probe Cal. Due	Cesium only instruments (10mV to 100)

INST #	INST C/D	43-68 PROBE #	PROBE C/D	44-10 PROBE #	PROBE C/D	BETA EFF	ALPHA EFF
79037	04/05/05	122014	04/23/05			25.2%	N/A
126188	1/27/05	099186	1/27/05			28.2%	N/A
126218	01/08/05	095080	01/09/05			27.9%	N/A

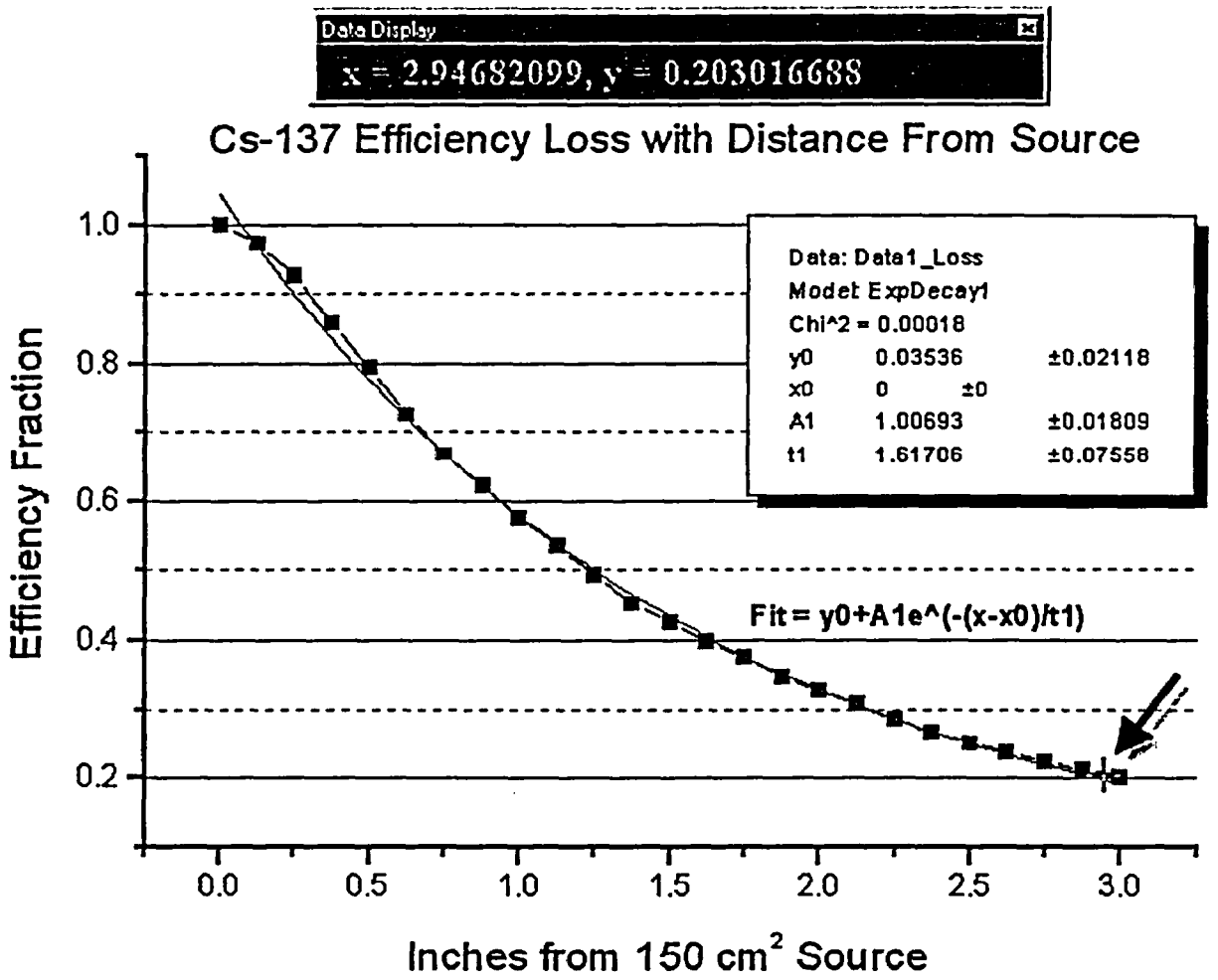

ATTACHMENT 3 . 1

DCGL Calculation Logic-Discharge Tunnel

I. **Survey Unit:** SNEC Discharge Tunnel

II. **Description:** The purpose of this calculation is to determine a representative isotopic mix for the Discharge Tunnel from available sample analyses. The effective surface area and volumetric $DCGL_w$s are then determined from the mean percent of applicable samples.

III. **Data Selection Logic Tables**: The radionuclide selection logic and subsequent DCGL calculations are provided in seven (7) tables. These tables were developed using Microsoft Excel spreadsheet software. Table explanation is as follows.

Table 1: Data Listing – This table, which has been extracted from a larger database, provides a list of the most representative Discharge Tunnel sample analyses. These results are from scoping, characterization, and pre/post remediation surveys. The samples consist of various sediments, scrapings and concrete cores that were taken in support of the aforementioned surveys. As applicable, a sample number, sample location/description, radionuclide concentration, analysis date are provided for each sample. Positive nuclide concentrations are noted with yellow/shaded background fields while MDAs are noted in the gray shaded fields.

Table 2: Decayed Listing – This table provides the best overall representation of data selected and decayed from Table 1. In Table 1 half-life values (days) are listed above each respective nuclide column. Samples are decayed to the date noted above Table 1 (e.g. January 15, 2004). Positive results are denoted in a yellow background field while MDA values are in a gray background.

Table 3: Decayed Listing of Positive Nuclides & MDAs Removed– This table provides the decayed values of positive nuclides selected in Table 2. In addition MDA values have been removed from this table.

Table 4: Mean Percent of Total for Positive Nuclides – This table provides the calculation methodology for determining the relative fractions of the total activity contributed by each radionuclide. From this information the mean, sigma, and mean % of total are calculated. The mean % of total values is used to calculate the surface gross activity $DCGL_w$ per MARSSIM equation 4-4. See Table 6. Note that the Co-60 mean percents were averaged using only samples 1 & 2. In addition, the mean percents calculated from sample 2 for Am-241, Pu-238, Pu-239 and Ni-63 were not averaged throughout the spreadsheet since there was only one sample where these respective nuclides were positive. This results in higher "mean percent of total" values in the mix, which are conservative.

Table 5: Ratio to Cs-137 for Positive Nuclides – This table provides the calculation methodology for determining the surrogate ratio to Cs-137 for each radionuclide. From this information the mean, sigma, and mean % of total are calculated. The mean % of total values is used to calculate the volumetric $DCGL_w$ per MARSSIM equation I-14. See Table 7. Note that the Co-60 ratios were averaged using only samples 1 & 2. In addition, the ratios calculated from sample 2 for Am-241, Pu-238, Pu-239 and Ni-63 were not averaged throughout the spreadsheet since there was only one sample where these respective nuclides were positive. This results in higher "mean percent of total" values in the mix, which are conservative.

Note: From Tables 4 and 5 only the "mean % of total" values are used as input to the "*Effective DCGL Calculation Spreadsheet*" as illustrated in Tables 6 and 7.

ATTACHMENT 4 - 1

Table 6: Effective DCGL Calculator for Cs-137 (dpm/100 cm^2) – This table provides the surface gross activity $DCGL_w$ calculation results from data inputted from Table 4.

Table 7: Effective DCGL Calculator for Cs-137 (in pCi/g) – This table provides the surrogate volumetric modified Cs-137 $DCGL_w$ calculation results from data inputted from Table 5.

IV. **Summary** – Since the Discharge Tunnel is a concrete structure the release limit is primarily based on the surface area $DCGL_w$. However, a small portion of the Discharge Tunnel ceiling Class 1 area has volumetric contamination. Using the above data selection logic tables the calculated gross activity $DCGL_w$ for surface area is 8,968 dpm/100 cm^2. The Cs-137 volumetric $DCGL_w$ is 6.52 pCi/g. These values would be reduced by 25% as part of SNEC's requirement to apply an administrative limit as required by the License Termination Plan (LTP).

ATTACHMENT 4 . 2

TABLE 1 - REDUCED LISTING

	SNEC Sample No	LAB No.	Location/Description	H-3	Sr-90	Co-60	Cs-137	Am-241	Pu-238	Pu-239	Pu-241	C-14	Ni-63	Eu-152	Decay Date / Analysis Date
1	CV Tunnel	BWXT, 0102059-01	CV Tunnel Sediment Composite, OL1	9.4	9.67	1.26	1250	0.18	0.55	0.22	44.69	9.34	4.02	0.13	February 14, 2001
2	SX9SL99219	111074	Subsurface Sample #29 (0-5'), AY-128, OL1			0.07	0.59								November 17, 1999
3	SXSL1063	Teledyne-80018; L19184-1	North CV Yard Soil BA-127, 812' El, Sample # 5, OL2	4.58	0.0531	0.0192	0.886	0.0961	0.0468	0.0327	3.77	0.21	10.9	0.0525	June 27, 2002
4	SXSL1089	Teledyne-80019; L19184-2	North CV Yard Soil AY-127, 810' El, Sample # 3, OL1	3.03	0.0695	0.0332	1.29	0.0993	0.128	0.05	4.97	0.21	7.54	0.0828	June 28, 2002
5	SXSL1115	Teledyne-80020; L19184-3	North CV Yard Soil AY-128, 804' El, Sample # 2, OL1	4.88	0.0536	0.0243	1.8	0.24	0.138	0.0407	4.21	0.21	7.6	0.0571	June 29, 2002
6	SXSL1122	Teledyne-80021; L19184-4	North CV Yard Soil AY-129, 798' El, Sample # 2, OL1	3.44	0.0529	0.0279	4.77	0.183	0.0894	0.04	3.68	0.206	8.75	0.0862	June 29, 2002
7	SXSL1130	Teledyne-80022; L19184-5	North CV Yard Soil AX-129, 803' El, Sample # 4, OL1	4.99	0.0648	0.0298	22.6	0.149	0.0856	0.0121	3.55	0.231	13.4	0.0989	July 3, 2002
8	SXSL1132	Teledyne-80023; L19184-6	North CV Yard Soil AZ-130, Sample # 5, OL1	2.98	0.0715	0.035	2.59	0.164	0.0746	0.0646	5.27	0.215	12.6	0.0734	July 3, 2002
9	SXSL1270	BWXT, 0108055-02	AX-129, 3-3, Soil, CV SE Side 5' From CV, 800' El., OL1	11.31	0.02	0.01	23.1	0.037	0.007	0.007	2.104	3.93	8.68	0.07	July 26, 2001
10	SXSL1281	BWXT, 0108055-01	AX-128, 3-1, Soil, CV Tunnel East 5' From CV, 800' El, OL1	11.52	0.03	0.01	4.38	0.031	0.016	0.007	1.908	4	7.78	0.04	July 26, 2001
11	SXSL2649	Teledyne-73220; L18077-2	Anulus Well, A-2, 5 to 10' Depth, OL1	2	0.0314	0.1	0.6	0.00978	0.0133	0.011	1.87	0.183	1.75		February 13, 2002
13	SXSL2871	Teledyne-71949; L17838-11	CV Area - East Yard Dirt Pile - Middle, 1/2 Way Up, OL1		0.03	0.07	0.56								March 6, 2002
14	SXSL2872	Teledyne-71948; L17838-10	CV Area - East Yard Dirt Pile - Bottom (also top center), OL1		0.03	0.06	0.1								March 6, 2002
15	SXSL3140	BWXT,1030-003-10-01	East CV Yard, Soil Pile @ 6' on West Side (6" Depth), OL1	1.892	0.012	0.014	0.825	0.007	0.005	0.005	0.369	0.086	3.406	0.03	August 30, 2002
16	SXSL3142	Teledyne; L20326-3	Soil Pile, CV Yard, Three Feet on East Side, SR-37, OL1		0.0295	0.07	0.6								August 13, 2002
17	SXSL3145	BWXT,1030-003-10-01	East CV Yard, Soil Pile @ 3' on East Side (6" Depth), OL1	1.897	0.017	0.013	1.26	0.004	0.005	0.005	0.376	0.083	3.69	0.038	August 30, 2002
18	SXSL3149	Teledyne; L20326-4	Soil Pile, CV Yard, Six Feet on East Side, SR-37, OL1		0.0297	0.09	0.3								August 13, 2002
19	SXSL3153	BWXT,1030-003-10-01	East CV Yard, Soil Pile @ Top (6" Depth), OL1	1.937	0.043	0.023	0.3	0.003	0.005	0.005	0.343	0.087	4.177	0.051	August 30, 2002
21	SXSL4142	Teledyne; L22187-2	CV Yard Soil - West Side, AP1-7, OL1	2.22	0.0325	0.05	0.9	0.0176	0.0671	0.0202					October 2, 2003
22	SXSL4143	Teledyne; L22187-3	CV Yard Soil - West Side, AP1-7, OL1	2.23	0.0316	0.05	0.5	0.0221	0.0631	0.0364					October 2, 2003
23	SXSL4149	Teledyne; L22187-4	CV Yard Soil - West Side, AP1-7, OL1	2.24	0.0277	0.07	3.9	0.0277	0.043	0.0304					October 2, 2003

TABLE 2 - REDUCED LISTING - DECAYED

	SNEC Sample No	LAB No.	Location/Description	H-3	Sr-90	Co-60	Cs-137	Am-241	Pu-238	Pu-239	Pu-241	C-14	Ni-63	Eu-152	Analysis Date	ET (d)
				T 1/2	T 1/2	T 1/2	T 1/2	T 1/2	T 1/2	T 1/2	T 1/2	T 1/2	T 1/2	T 1/2	Decay Date	
				4485.27	10446.15	1925.233	11019.59	157861.1	32050.69	8813848	5259.6	2092883	36561.53	4967.4	December 15, 2004	
1	CV Tunnel	BWXT, 0102059-01	CV Tunnel Sediment Composite, OL1	7.57E+00	8.81E+00	7.61E-01	1.14E+03	1.79E-01	5.34E-01	2.20E-01	3.72E+01	9.34E+00	3.91E+00	1.07E-01	February 14, 2001	1400
2	SX9SL99219	111074	Subsurface Sample #29 (0-5'), AY-128, OL1			3.59E-02	5.25E-01								November 17, 1999	1855
3	SXSL1063	Teledyne-80018; L19184-1	North CV Yard Soil BA-127, 812' El, Sample # 5, OL2	3.98E+00	5.00E-02	1.39E-02	8.37E-01	9.57E-02	4.59E-02	3.27E-02	3.35E+00	2.10E-01	1.07E+01	4.63E-02	June 27, 2002	902
4	SXSL1089	Teledyne-80019; L19184-2	North CV Yard Soil AY-127, 810' El, Sample # 3, OL1	2.64E+00	6.55E-02	2.40E-02	1.22E+00	9.89E-02	1.26E-01	5.00E-02	4.41E+00	2.10E-01	7.41E+00	7.30E-02	June 28, 2002	901
5	SXSL1115	Teledyne-80020; L19184-3	North CV Yard Soil AY-128, 804' El, Sample # 2, OL1	4.25E+00	5.05E-02	1.76E-02	1.70E+00	2.39E-01	1.35E-01	4.07E-02	3.74E+00	2.10E-01	7.47E+00	5.04E-02	June 29, 2002	900
6	SXSL1122	Teledyne-80021; L19184-4	North CV Yard Soil AY-129, 798' El, Sample # 2, OL1	2.99E+00	4.98E-02	2.02E-02	4.51E+00	1.82E-01	8.77E-02	4.00E-02	3.27E+00	2.06E-01	8.60E+00	7.60E-02	June 29, 2002	900
7	SXSL1130	Teledyne-80022; L19184-5	North CV Yard Soil AX-129, 803' El, Sample # 4, OL1	4.34E+00	6.11E-02	2.16E-02	2.14E+01	1.48E-01	8.40E-02	1.21E-02	3.15E+00	2.31E-01	1.32E+01	8.73E-02	July 3, 2002	896
8	SXSL1132	Teledyne-80023; L19184-6	North CV Yard Soil AZ-130, Sample # 5, OL1	2.59E+00	6.74E-02	2.54E-02	2.45E+00	1.63E-01	7.32E-02	6.46E-02	4.68E+00	2.15E-01	1.24E+01	6.48E-02	July 3, 2002	896
9	SXSL1270	BWXT, 0108055-02	AX-129, 3-3, Soil, CV SE Side 5' From CV, 800' El., OL1	9.34E+00	1.84E-02	6.40E-03	2.14E+01	3.68E-02	6.82E-03	7.00E-03	1.79E+00	3.93E+00	8.48E+00	5.89E-02	July 26, 2001	1238
10	SXSL1281	BWXT, 0108055-01	AX-128, 3-1, Soil, CV Tunnel East 5' From CV, 800' El, OL1	9.51E+00	2.76E-02	6.40E-03	4.05E+00	3.08E-02	1.56E-02	7.00E-03	1.62E+00	4.00E+00	7.60E+00	3.37E-02	July 26, 2001	1238
11	SXSL2649	Teledyne-73220; L18077-2	Anulus Well, A-2, 5 to 10' Depth, OL1	1.70E+00	2.93E-02	6.89E-02	5.62E-01	9.74E-03	1.30E-02	1.10E-02	1.63E+00	1.83E-01	1.72E+00	0.00E+00	February 13, 2002	1036
13	SXSL2871	Teledyne-71949; L17838-11	CV Area - East Yard Dirt Pile - Middle, 1/2 Way Up, OL1		2.80E-02	4.86E-02	5.25E-01								March 6, 2002	1015
14	SXSL2872	Teledyne-71948; L17838-10	CV Area - East Yard Dirt Pile - Bottom (also top center), OL1		2.80E-02	4.16E-02	9.38E-02								March 6, 2002	1015
15	SXSL3140	BWXT,1030-003-10-01	East CV Yard, Soil Pile @ 6' on West Side (6" Depth), OL1	1.66E+00	1.14E-02	1.04E-02	7.83E-01	6.97E-03	4.91E-03	5.00E-03	3.30E-01	8.60E-02	3.35E+00	2.67E-02	August 30, 2002	838
16	SXSL3142	Teledyne; L20326-3	Soil Pile, CV Yard, Three Feet on East Side, SR-37, OL1		2.79E-02	5.15E-02	5.69E-01								August 13, 2002	855
17	SXSL3145	BWXT,1030-003-10-01	East CV Yard, Soil Pile @ 3' on East Side (6" Depth), OL1	1.67E+00	1.61E-02	9.61E-03	1.20E+00	3.99E-03	4.91E-03	5.00E-03	3.37E-01	8.30E-02	3.63E+00	3.38E-02	August 30, 2002	838
18	SXSL3149	Teledyne; L20326-4	Soil Pile, CV Yard, Six Feet on East Side, SR-37, OL1		2.81E-02	5.00E-02	2.84E-01								August 13, 2002	855
19	SXSL3153	BWXT,1030-003-10-01	East CV Yard, Soil Pile @ Top (6" Depth), OL1	1.70E+00	4.07E-02	1.70E-02	2.85E-01	2.99E-03	4.91E-03	5.00E-03	3.07E-01	8.70E-02	4.11E+00	4.54E-02	August 30, 2002	838
21	SXSL4142	Teledyne; L22187-2	CV Yard Soil - West Side, AP1-7, OL1	2.07E+00	3.16E-02	4.27E-02	8.75E-01	1.76E-02	6.65E-02	2.02E-02					October 2, 2003	440
22	SXSL4143	Teledyne; L22187-3	CV Yard Soil - West Side, AP1-7, OL1	2.08E+00	3.07E-02	4.27E-02	4.86E-01	2.21E-02	6.25E-02	3.64E-02					October 2, 2003	440
23	SXSL4149	Teledyne; L22187-4	CV Yard Soil - West Side, AP1-7, OL1	2.09E+00	2.69E-02	5.97E-02	3.79E+00	2.76E-02	4.26E-02	3.04E-02					October 2, 2003	440

KEY

	Yellow Background = Positive Result
	Gray Shaded Background = MDA
XXXX	Red Values = On-Site Analysis

C01

TABLE 3 - REDUCED LISTING DECAYED - MDA's REMOVED

	SNEC Sample No	LAB No.	Location/Description	H-3	Sr-90	Co-60	Cs-137	Total pCi/g
1	CV Tunnel	BWXT, 0102059-01	CV Tunnel Sediment Composite, OL1		8.81E+00	7.61E-01	1.14E+03	1154.23
2	SX9SL99219	111074	Subsuface Sample #29 (0-5'), AY-128, OL1				5.25E-01	0.53
3	SXSL1063	Teledyne-80018; L19184-1	North CV Yard Soil BA-127, 812' El, Sample # 5, OL2	3.98E+00			8.37E-01	4.82
4	SXSL1089	Teledyne-80019; L19184-2	North CV Yard Soil AY-127, 810' El, Sample # 3, OL1	2.64E+00			1.22E+00	3.86
5	SXSL1115	Teledyne-80020; L19184-3	North CV Yard Soil AY-128, 804' El, Sample # 2, OL1	4.25E+00			1.70E+00	5.95
6	SXSL1122	Teledyne-80021; L19184-4	North CV Yard Soil AY-129, 798' El, Sample # 2, OL1	2.99E+00			4.51E+00	7.50
7	SXSL1130	Teledyne-80022; L19184-5	North CV Yard Soil AX-129, 803' El, Sample # 4, OL1	4.34E+00		2.16E-02	2.14E+01	25.73
8	SXSL1132	Teledyne-80023; L19184-6	North CV Yard Soil AZ-130, Sample # 5, OL1	2.59E+00			2.45E+00	5.04
9	SXSL1270	BWXT, 0108055-02	AX-129, 3-3, Soil, CV SE Side 5' From CV, 800' El., OL1				2.14E+01	21.37
10	SXSL1281	BWXT, 0108055-01	AX-128, 3-1, Soil, CV Tunnel East 5' From CV, 800' El, OL1				4.05E+00	4.05
11	SXSL2649	Teledyne-73220; L18077-2	Anulus Well, A-2, 5 to 10' Depth, OL1				5.62E-01	0.56
13	SXSL2871	Teledyne-71949; L17838-11	CV Area - East Yard Dirt Pile - Middle, 1/2 Way Up, OL1				5.25E-01	0.53
14	SXSL2872	Teledyne-71948; L17838-10	CV Area - East Yard Dirt Pile - Bottom (also top center), OL1				9.38E-02	0.09
15	SXSL3140	BWXT,1030-003-10-01	East CV Yard, Soil Pile @ 6' on West Side (6" Depth), OL1				7.83E-01	0.78
16	SXSL3142	Teledyne; L20326-3	Soil Pile, CV Yard, Three Feet on East Side, SR-37, OL1				5.69E-01	0.57
17	SXSL3145	BWXT,1030-003-10-01	East CV Yard, Soil Pile @ 3' on East Side (6" Depth), OL1				1.20E+00	1.20
18	SXSL3149	Teledyne; L20326-4	Soil Pile, CV Yard, Six Feet on East Side, SR-37, OL1				2.84E-01	0.28
19	SXSL3153	BWXT,1030-003-10-01	East CV Yard, Soil Pile @ Top (6" Depth), OL1				2.85E-01	0.28
21	SXSL4142	Teledyne; L22187-2	CV Yard Soil - West Side, AP1-7, OL1				8.75E-01	0.88
22	SXSL4143	Teledyne; L22187-3	CV Yard Soil - West Side, AP1-7, OL1				4.86E-01	0.49
23	SXSL4149	Teledyne; L22187-4	CV Yard Soil - West Side, AP1-7, OL1			5.97E-02	3.79E+00	3.85

TABLE 4 - MEAN PERCENT OF TOTAL FOR POSITIVE NUCLIDES

	SNEC Sample No	LAB No.	Location/Description	H-3	Sr-90	Co-60	Cs-137	Total
1	CV Tunnel	BWXT, 0102059-01	CV Tunnel Sediment Composite, OL1		0.76%	0.07%	99.17%	100.0%
2	SX9SL99219	111074	Subsuface Sample #29 (0-5'), AY-128, OL1				100.00%	100.0%
3	SXSL1063	Teledyne-80018; L19184-1	North CV Yard Soil BA-127, 812' El, Sample # 5, OL2	82.64%			17.36%	100.0%
4	SXSL1089	Teledyne-80019; L19184-2	North CV Yard Soil AY-127, 810' El, Sample # 3, OL1	68.38%			31.62%	100.0%
5	SXSL1115	Teledyne-80020; L19184-3	North CV Yard Soil AY-128, 804' El, Sample # 2, OL1	71.40%			28.60%	100.0%
6	SXSL1122	Teledyne-80021; L19184-4	North CV Yard Soil AY-129, 798' El, Sample # 2, OL1	39.91%			60.09%	100.0%
7	SXSL1130	Teledyne-80022; L19184-5	North CV Yard Soil AX-129, 803' El, Sample # 4, OL1	16.89%		0.08%	83.03%	100.0%
8	SXSL1132	Teledyne-80023; L19184-6	North CV Yard Soil AZ-130, Sample # 5, OL1	51.45%			48.55%	100.0%
9	SXSL1270	BWXT, 0108055-02	AX-129, 3-3, Soil, CV SE Side 5' From CV, 800' El., OL1				100.00%	100.0%
10	SXSL1281	BWXT, 0108055-01	AX-128, 3-1, Soil, CV Tunnel East 5' From CV, 800' El, OL1				100.00%	100.0%
11	SXSL2649	Teledyne-73220; L18077-2	Anulus Well, A-2, 5 to 10' Depth, OL1				100.00%	100.0%
13	SXSL2871	Teledyne-71949; L17838-11	CV Area - East Yard Dirt Pile - Middle, 1/2 Way Up, OL1				100.00%	100.0%
14	SXSL2872	Teledyne-71948; L17838-10	CV Area - East Yard Dirt Pile - Bottom (also top center), OL1				100.00%	100.0%
15	SXSL3140	BWXT,1030-003-10-01	East CV Yard, Soil Pile @ 6' on West Side (6" Depth), OL1				100.00%	100.0%
16	SXSL3142	Teledyne; L20326-3	Soil Pile, CV Yard, Three Feet on East Side, SR-37, OL1				100.00%	100.0%
17	SXSL3145	BWXT,1030-003-10-01	East CV Yard, Soil Pile @ 3' on East Side (6" Depth), OL1				100.00%	100.0%
18	SXSL3149	Teledyne; L20326-4	Soil Pile, CV Yard, Six Feet on East Side, SR-37, OL1				100.00%	100.0%
19	SXSL3153	BWXT,1030-003-10-01	East CV Yard, Soil Pile @ Top (6" Depth), OL1				100.00%	100.0%
21	SXSL4142	Teledyne; L22187-2	CV Yard Soil - West Side, AP1-7, OL1				100.00%	100.0%
22	SXSL4143	Teledyne; L22187-3	CV Yard Soil - West Side, AP1-7, OL1				100.00%	100.0%
23	SXSL4149	Teledyne; L22187-4	CV Yard Soil - West Side, AP1-7, OL1			1.55%	98.45%	100.0%
			Mean⇒	0.551113	0.007635	0.005668	0.841366	1.41
			Sigma⇒	0.241		0.009	0.282	
			Mean % of Total⇒	39.20%	0.54%	0.40%	59.85%	100.00%
			2 Sigma + Mean⇒	1.03E+00	7.63E-03	2.27E-02	1.40E+00	2.47
			% of Total⇒	41.86%	0.31%	0.92%	56.91%	100.00%

C02

Table 6

Effective DCGL Calculator for Cs-137 (dpm/100 cm^2)

Gross Activity DCGLw		Gross Activity Administrative Limit	
8968	dpm/100 cm^2	6726	dpm/100 cm^2
Cs-137 Limit		**Cs-137 Administrative Limit**	
8807	dpm/100 cm^2	6605	dpm/100 cm^2
SNEC AL	75%		

25.0 mrem/y TEDE Limit

SAMPLE NO(s)⇒ Discharge Tunnel

	Isotope	Sample Input (pCi/g, uCi, etc.)	% of Total	Individual Limits (dpm/100 cm^2)	Allowed dpm/100 cm^2	mrem/y TEDE	Beta dpm/100 cm^2	Alpha dpm/100 cm^2	
1	Am-241	1.22E-03	0.120%	27	10.77	9.97	N/A	10.77	Am-241
2	C-14		0.000%	3,700,000	0.00	0.00	0.00	N/A	C-14
3	Co-60	4.03E-03	0.397%	7,100	35.56	0.13	35.56	N/A	Co-60
4	Cs-137	9.98E-01	98.203%	28,000	8806.99	7.86	8807.0	N/A	Cs-137
5	Eu-152		0.000%	13,000	0.00	0.00	0.00	N/A	Eu-152
6	H-3		0.000%	120,000,000	0.00	0.00	Not Detectable	N/A	H-3
7	Ni-63	1.21E-02	1.191%	1,800,000	106.78	0.00	Not Detectable	N/A	Ni-63
8	Pu-238	3.50E-04	0.034%	30	3.09	2.57	N/A	3.09	Pu-238
9	Pu-239	5.67E-04	0.056%	28	5.00	4.47	N/A	5.00	Pu-239
10	Pu-241		0.000%	880	0.00	0.00	Not Detectable	N/A	Pu-241
11	Sr-90		0.000%	8,700	0.00	0.00	0.00	N/A	Sr-90
			100.000%		8968	25.0	8843	19	
					Maximum Permissible dpm/100 cm^2				

ATTACHMENT 4.5

Table 7

Effective DCGL Calculator for Cs-137 (in pCi/g)

SNEC AL	75%	Total Activity Limit DCGLw		Administrative Limit	
		6.64	pCi/g	4.98	pCi/g

SAMPLE NUMBER(s)⇒ Discharge Tunnel

Cs-137 Limit		Cs-137 Administrative Limit	
6.52	pCi/g	4.89	pCi/g

15.34%	25.0	mrem/y TEDE Limit
0.55%	4.0	mrem/y Drinking Water (DW) Limit

☑ Check for 25 mrem/y

	Isotope	Sample Input (pCi/g, uCi, % of Total, etc.)	% of Total	25 mrem/y TEDE Limits (pCi/g)	4 mrem/y DW Limits (pCi/g)	A - Allowed pCi/g for 25 mrem/y TEDE	B - Allowed pCi/g for 4 mrem/y DW	Value Checked from Column A or B	This Sample mrem/y TEDE	This Sample mrem/y DW	
1	Am-241	0.001	0.122%	9.9	2.3	0.01	0.22	0.01	0.00	0.00	Am-241
2	C-14		0 000%	2.0	5.4	0 00	0.00	0 00	0 00	0.00	C-14
3	Co-60	0.0041	0 401%	3.5	67.0	0 03	0.74	0 03	0 03	0.00	Co-60
4	Cs-137	1.0000	98.178%	6.6	397	6.52	180.19	6.52	3.79	0.01	Cs-137
5	Eu-152		0.000%	10.1	1440	0.00	0.00	0.00	0.00	0.00	Eu-152
6	H-3		0 000%	132	31.1	0.00	0.00	0 00	0 00	0.00	H-3
7	Ni-63	0.0123	1 208%	747	19000	0 08	2.22	0 08	0 00	0.00	Ni-63
8	Pu-238	0.0004	0.035%	1.8	0.41	0.00	0.06	0.00	0.00	0.00	Pu-238
9	Pu-239	0.0006	0 057%	1.6	0.37	0 00	0.10	0.00	0.01	0.01	Pu-239
10	Pu-241		0 000%	86	19.6	0.00	0.00	0 00	0 00	0.00	Pu-241
11	Sr-90		0 000%	1.2	0.61	0 00	0.00	0 00	0 00	0.00	Sr-90
		1.02E+00	100.000%			6.64	183.53	6.64	3.835	0.022	
						Maximum Permissible pCi/g (25 mrem/y)	Maximum Permissible pCi/g (4 mrem/y)		To Use This Information, Sample Input Units Must Be In pCi/g *not % of Total.*		

ATTACHMENT 4 - 6

NaI Scan MDC Calculation - Concrete Volume

$b := 100$ $p := 0.5$ $HS_d := 30.48$ $SR := 2.54$ $d := 1.38$

$Conv := 208.302$ $MS_{output} := 7.881 \cdot 10^{-5}$

$\frac{HS_d}{SR} = 12$ *Observation Interval (seconds)*

$O_i := \frac{HS_d}{SR}$ *Observation Interval (seconds)*

$b_i := \frac{(b \cdot O_i)}{60}$

$MDCR_i := \left(d \cdot \sqrt{b_i}\right) \cdot \frac{60}{O_i}$

$MDCR_i = 30.858$ *net counts per minute*

$MDCR_{surveyor} := \frac{MDCR_i}{\sqrt{p}}$

$MDCR_{surveyor} = 43.639$ *net counts per minute*

$MDER := \frac{MDCR_{surveyor}}{Conv}$

$MDER = 0.21$ μR/h

$MDC_{scan} := \frac{MDER}{MS_{output} \cdot 1 \cdot 10^3}$

$MDC_{scan} = 2.658$ pCi/g

where:

b = background in counts per minute

b_i = background counts in observation interval

Conv = NaI manufacturers reported response to energy of contaminant (cpm/uR/h)

d = index of sensitivity (Table 6.5 MARSSIM), 1.38 = 95% of correct detection's, 60% false positives

HS_d = hot spot diameter (in centimeters)

MDC_{scan} = Minimum Detectable Concentration for scanning (pCi/g)

$MDCR_i$ = Minimum Detectable Count Rate (ncpm)

$MDCR_{surveyor}$ = $MDCR_i$ corrected by human performance factor (ncpm)

MDER = Minimum Detectable Exposure Rate (uR/h)

MS_{output} = MicroShield output exposure rate for 1 pCi/g of contaminant (mR/h)

O_i = obervation Interval (seconds)

p = human performance factor

SR = scan rate in centimeters per second

MicroShield v5.05 (5.05-00121)
GPU Nuclear

Page : 1
DOS File : SLABD.MS5
Run Date : August 9, 2004
Run Time : 1:51:51 PM
Duration : 00:00:03

File Ref: _____
Date: _____
By: _____
Checked: _____

Case Title: Concrete Slab
Description: 12" Diameter by 1" Deep - Cs-137 @ 1 pCi/g
Geometry: 8 - Cylinder Volume - End Shields

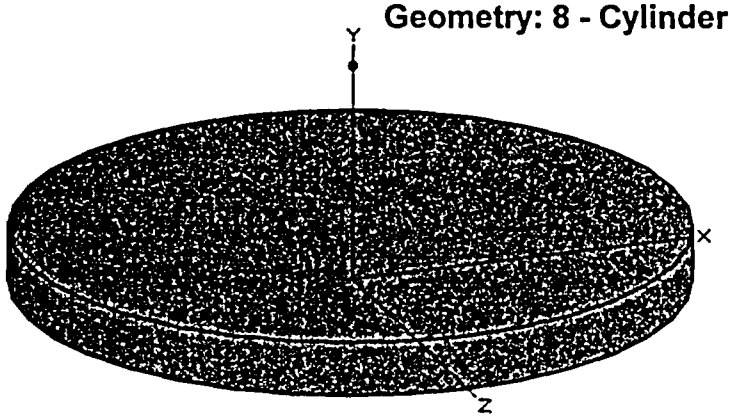

Source Dimensions

Height	2.54 cm	1.0 in
Radius	15.24 cm	6.0 in

Dose Points

	X	Y	Z
# 1	0 cm	10.16 cm	0 cm
	0.0 in	4.0 in	0.0 in

Shields

Shield Name	Dimension	Material	Density
Source	113.097 in³	Concrete	2.35
Air Gap		Air	0.00122

Source Input
Grouping Method : Actual Photon Energies

Nuclide	curies	becquerels	µCi/cm³	Bq/cm³
Ba-137m	4.1201e-009	1.5245e+002	2.2231e-006	8.2255e-002
Cs-137	4.3553e-009	1.6115e+002	2.3500e-006	8.6950e-002

Buildup
The material reference is : Source

Integration Parameters

Radial	60
Circumferential	60
Y Direction (axial)	60

Results

Energy MeV	Activity photons/sec	Fluence Rate MeV/cm²/sec No Buildup	Fluence Rate MeV/cm²/sec With Buildup	Exposure Rate mR/hr No Buildup	Exposure Rate mR/hr With Buildup
0.0318	3.156e+00	6.355e-06	7.682e-06	5.293e-08	6.399e-08
0.0322	5.823e+00	1.222e-05	1.486e-05	9.832e-08	1.196e-07
0.0364	2.119e+00	6.726e-06	8.749e-06	3.821e-08	4.971e-08
0.6616	1.372e+02	3.200e-02	4.053e-02	6.204e-05	7.858e-05
TOTALS:	1.483e+02	3.203e-02	4.057e-02	6.223e-05	7.881e-05

ATTACHMENT 5.3

NaI Scan MDC Calculation - Surface Deposition

$b := 100$ $p := 0.5$ $HS_d := 31.75$ $SR := 5.08$ $d := 1.38$

$Conv := 208.302$ $MS_{output} := 1.734 \cdot 10^{-5}$ $O_i := \frac{HS_d}{SR}$

$O_i = 6.25$ *Observation Interval (seconds)*

$$b_i := \frac{(b \cdot O_i)}{60}$$

$$MDCR_i := \left(d \cdot \sqrt{b_i}\right) \cdot \frac{60}{O_i}$$

$MDCR_i = 42.758$ *net counts per minute*

$$MDCR_{surveyor} := \frac{MDCR_i}{\sqrt{p}}$$

$MDCR_{surveyor} = 60.469$ *net counts per minute*

$$MDER := \frac{MDCR_{surveyor}}{Conv}$$

$MDER = 0.29$ μR/h

$$MDC_{scan} := \frac{MDER}{MS_{output} \cdot 1 \cdot 10^3}$$

$MDC_{scan} = 16.741$ pCi/cm^2

$MDC_{scan} \cdot 222 = 3716.551$ *dpm/100 cm^2*

where:

b = background in counts per minute

b_i = background counts in observation interval

Conv = NaI manufacturers or calibration information reported response to energy of contaminant (cpm/uR/h)

d = index of sensitivity (Table 6.5 MARSSIM), 1.38 = 95% of correct detection's, 60% false positives

HS_d = hot spot diameter (in centimeters)

MDC_{scan} = Minimum Detectable Concentration for scanning (pCi/cm^2)

$MDCR_i$ = Minimum Detectable Count Rate (ncpm)

$MDCR_{surveyor}$ = $MDCR_i$ corrected by human performance factor (ncpm)

MDER = Minimum Detectable Exposure Rate (uR/h)

MS_{output} = MicroShield output exposure rate for 1 pCi/cm^2 of contaminant (mR/h)

O_i = obervation Interval (seconds)

p = human performance factor

SR = scan rate in centimeters per second

MicroShield v5.05 (5.05-00121)
GPU Nuclear

Page : 1
DOS File : GATE.MS5
Run Date: August 9, 2004
Run Time: 1:41:44 PM
Duration : 00:00:02

File Ref: _____
Date: _____
By: _____
Checked: _____

Case Title: Steel Gate
Description: Area of Steel Gate in Transition Area of DT - 12" x 13"
Geometry: 4 - Rectangular Area - Vertical

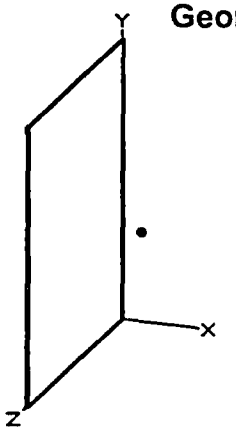

Source Dimensions

Width	30.48 cm	1 ft
Height	33.02 cm	1 ft 1.0 in

Dose Points

	X	Y	Z
# 1	7.9375 cm	16.51 cm	15.24 cm
	3.1 in	6.5 in	6.0 in

Shields

Shield Name	Dimension	Material	Density
Shield 1	.125 in	Iron Oxide	5.1
Air Gap		Air	0.00122

Source Input
Grouping Method : Actual Photon Energies

Nuclide	curies	becquerels	µCi/cm²	Bq/cm²
Ba-137m	9.5210e-010	3.5228e+001	9.4600e-007	3.5002e-002
Cs-137	1.0064e-009	3.7239e+001	1.0000e-006	3.7000e-002

Buildup
The material reference is : Shield 1

Integration Parameters

Z Direction	50
Y Direction	50

Results

Energy MeV	Activity photons/sec	Fluence Rate MeV/cm²/sec No Buildup	Fluence Rate MeV/cm²/sec With Buildup	Exposure Rate mR/hr No Buildup	Exposure Rate mR/hr With Buildup
0.0318	7.293e-01	5.790e-10	6.708e-10	4.823e-12	5.588e-12
0.0322	1.346e+00	1.438e-09	1.670e-09	1.157e-11	1.344e-11
0.0364	4.897e-01	7.258e-09	8.725e-09	4.124e-11	4.957e-11
0.6616	3.170e+01	7.670e-03	8.944e-03	1.487e-05	1.734e-05
TOTALS:	3.426e+01	7.670e-03	8.944e-03	1.487e-05	1.734e-05

ATTACHMENT 5.6

Site Report

Site Summary

Site Name: Spray Pump Pit & Transition Area

Planner(s): BHB

Contaminant Summary

NOTE: Surface soil DCGLw units are pCi/g.
Building surface DCGLw units are dpm/100 cm².

Contaminant	Type	DCGLw	Screening Value Used?	Area (m²)	Area Factor
Gross Activity	Building Surface	6,726	No	0.25	10.1
				1	10.1
				4	3.4
				9	2
				16	1.5
				25	1.2
				36	1

BHB 8/9/04

ATTACHMENT 6 . 1

Building Surface Survey Plan

Survey Plan Summary

Site:	Spray Pump Pit & Transition Area		
Planner(s):	BHB		
Survey Unit Name:	Spray Pump Pit		
Comments:	Class 1 - Pit Only to 795' El.		
Area (m²):	52	Classification:	1
Selected Test:	WRS	Estimated Sigma (cpm):	45.4
DCGL (cpm):	424	Sample Size (N/2):	13
LBGR (cpm):	350	Estimated Conc. (cpm):	-1
Alpha:	0.050	Estimated Power:	1.00
Beta:	0.100	EMC Sample Size (N):	13

Prospective Power Curve

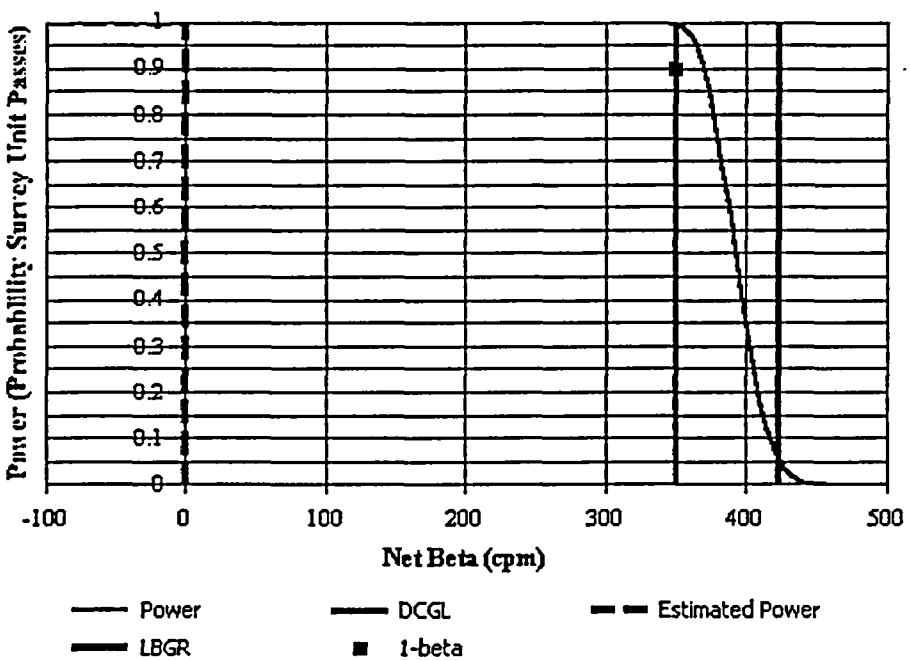

ATTACHMENT 6.2

Building Surface Survey Plan

Contaminant Summary

Contaminant	DCGLw (dpm/100 cm²)
Gross Activity	6,726

Beta Instrumentation Summary

Gross Beta DCGLw (dpm/100 cm²): 6,726
Total Efficiency: 0.05
Gross Beta DCGLw (cpm): 424

ID	Type	Mode	Area (cm²)
25	GFPC	Beta	126

Contaminant	Energy[1]	Fraction[2]	Inst. Eff.	Surf. Eff.	Total Eff.
Gross Activity	187.87	1.0000	0.48	0.10	0.0469

[1] Average beta energy (keV) [N/A indicates alpha emission]
[2] Activity fraction

Gross Survey Unit Mean (cpm): 305 ± 45 (1-sigma)
Count Time (min): 1

Material	Number of BKG Counts	Average (cpm)	Standard Deviation (cpm)	MDC (dpm/100 cm²)
Concrete	31	306	34.5	1,339

ATTACHMENT 6.3

COMPASS - DQO Wizard for Building Surface Assessment

Elevated Measurement Comparison (EMC) for Beta

Follow the order of each tab below to perform the EMC.

1) Enter Scanning Instrument Efficiencies | 2) Enter Scan MDC Parameters | **3) View EMC Results**

Scan MDC Required per Contaminant

Contaminant	DCGLw*	Area Factor	Scan MDC Required*
Gross Activity	6,726	3.40	22,868

Statistical Design

N/2:	13
Bounded Area (m²):	4.0
Area Factor:	3.40
DCGLw*:	6,726
Scan MDC Required*:	22,868

Hot Spot Design

Actual Scan MDC*:	2,644
Area Factor:	N/A
Bounded Area (m²):	N/A
Post-EMC N/2:	13

* dpm/100 cm²

COMPASS

No additional samples are required because the actual scan MDC is less than the DCGLw for each contaminant.

OK

Enable Trainin

v1.0.0

ATTACHMENT 6.4

Building Surface Survey Plan

Survey Plan Summary

Site:	Spray Pump Pit & Transition Area		
Planner(s):	BHB		
Survey Unit Name:	Transition Area Between DT & SPP		
Comments:			
Area (m²):	41	Classification:	1
Selected Test:	WRS	Estimated Sigma (cpm):	45.4
DCGL (cpm):	424	Sample Size (N/2):	13
LBGR (cpm):	350	Estimated Conc. (cpm):	-1
Alpha:	0.050	Estimated Power:	1.00
Beta:	0.100	EMC Sample Size (N):	13

Prospective Power Curve

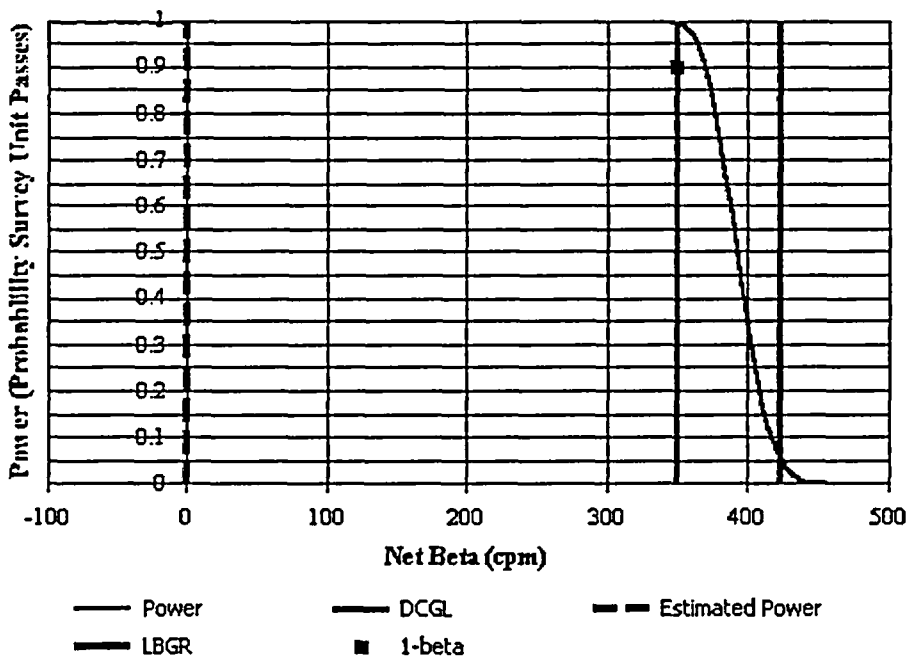

ATTACHMENT 6 - 5

Building Surface Survey Plan

Contaminant Summary

Contaminant	DCGLw (dpm/100 cm²)
Gross Activity	6,726

Beta Instrumentation Summary

Gross Beta DCGLw (dpm/100 cm²): 6,726
Total Efficiency: 0.05
Gross Beta DCGLw (cpm): 424

ID	Type	Mode	Area (cm²)
25	GFPC	Beta	126

Contaminant	Energy[1]	Fraction[2]	Inst. Eff.	Surf. Eff.	Total Eff.
Gross Activity	187.87	1.0000	0.48	0.10	0.0469

[1] Average beta energy (keV) [N/A indicates alpha emission]
[2] Activity fraction

Gross Survey Unit Mean (cpm): 305 ± 45 (1-sigma)
Count Time (min): 1

Material	Number of BKG Counts	Average (cpm)	Standard Deviation (cpm)	MDC (dpm/100 cm²)
Concrete	31	306	34.5	1,339

ATTACHMENT 6.6

COMPASS - DQO Wizard for Building Surface Assessment

Elevated Measurement Comparison (EMC) for Beta

Follow the order of each tab below to perform the EMC.

1) Enter Scanning Instrument Efficiencies | 2) Enter Scan MDC Parameters | **3) View EMC Results**

Scan MDC Required per Contaminant

Contaminant	DCGLw*	Area Factor	Scan MDC Required*
Gross Activity	6,726	5.19	34,908

Statistical Design

N/2:	13
Bounded Area (m²):	3.2
Area Factor:	5.19
DCGLw*:	6,726
Scan MDC Required*:	34,908

Hot Spot Design

Actual Scan MDC*:	2,644
Area Factor:	N/A
Bounded Area (m²):	N/A
Post-EMC N/2:	13

* dpm/100 cm²

COMPASS

No additional samples are required because the actual scan MDC is less than the DCGLw for each contaminant.

OK

Enable Training

v1.0.0

ATTACHMENT 6 - 7

Spray Pump Pit Class 1 Area

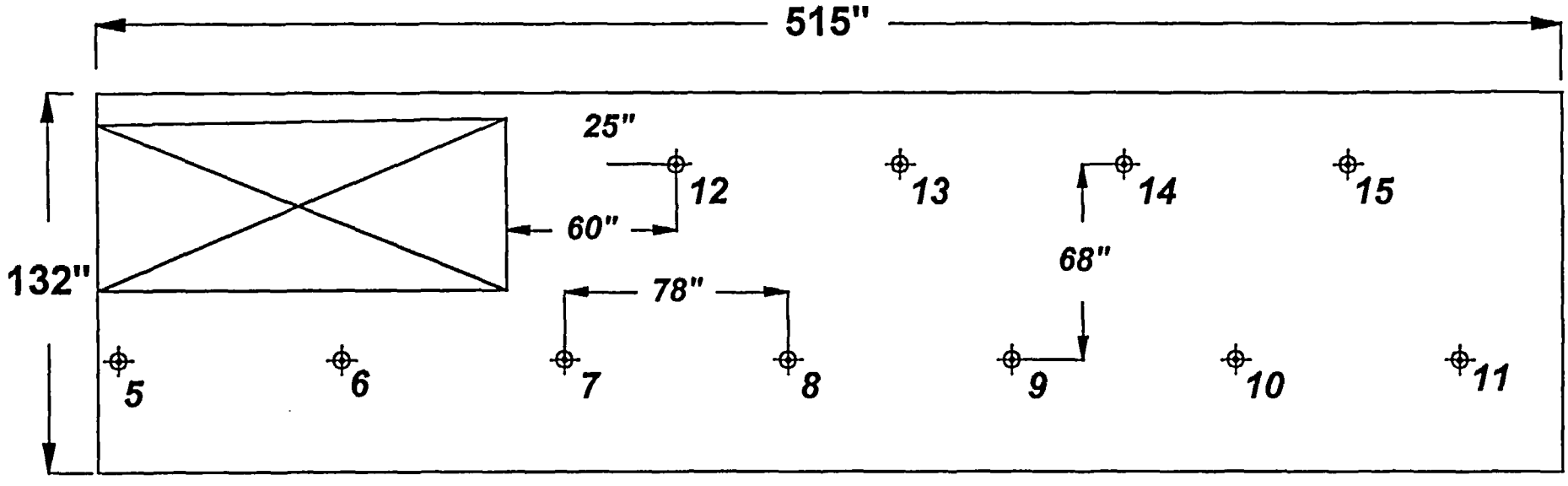

Pit Walls Unfolded

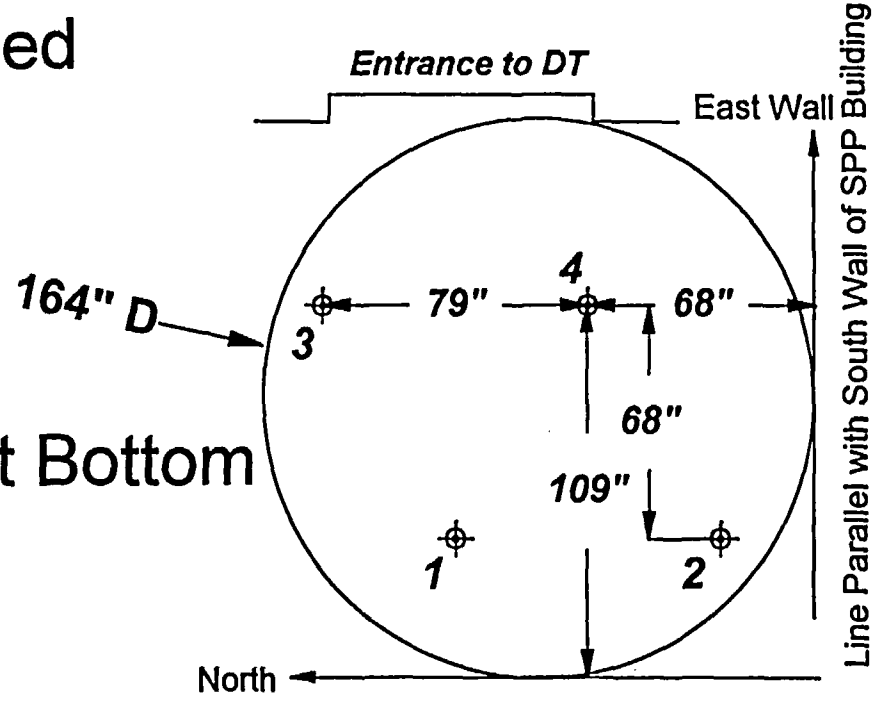

Pit Bottom

ATTACHMENT 7 : 1

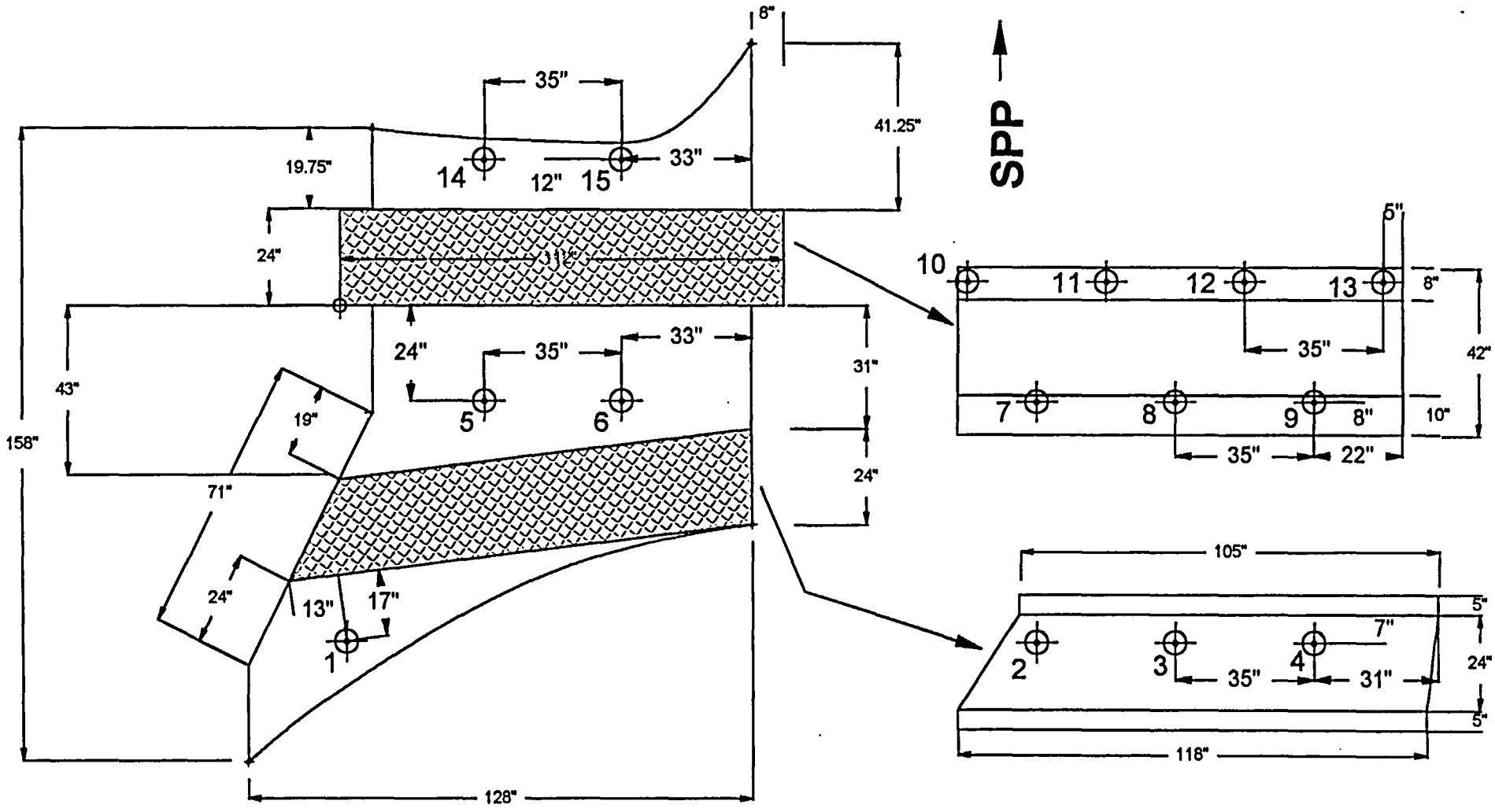

Floor of Transition Area to SPP

ATTACHMENT 7.2

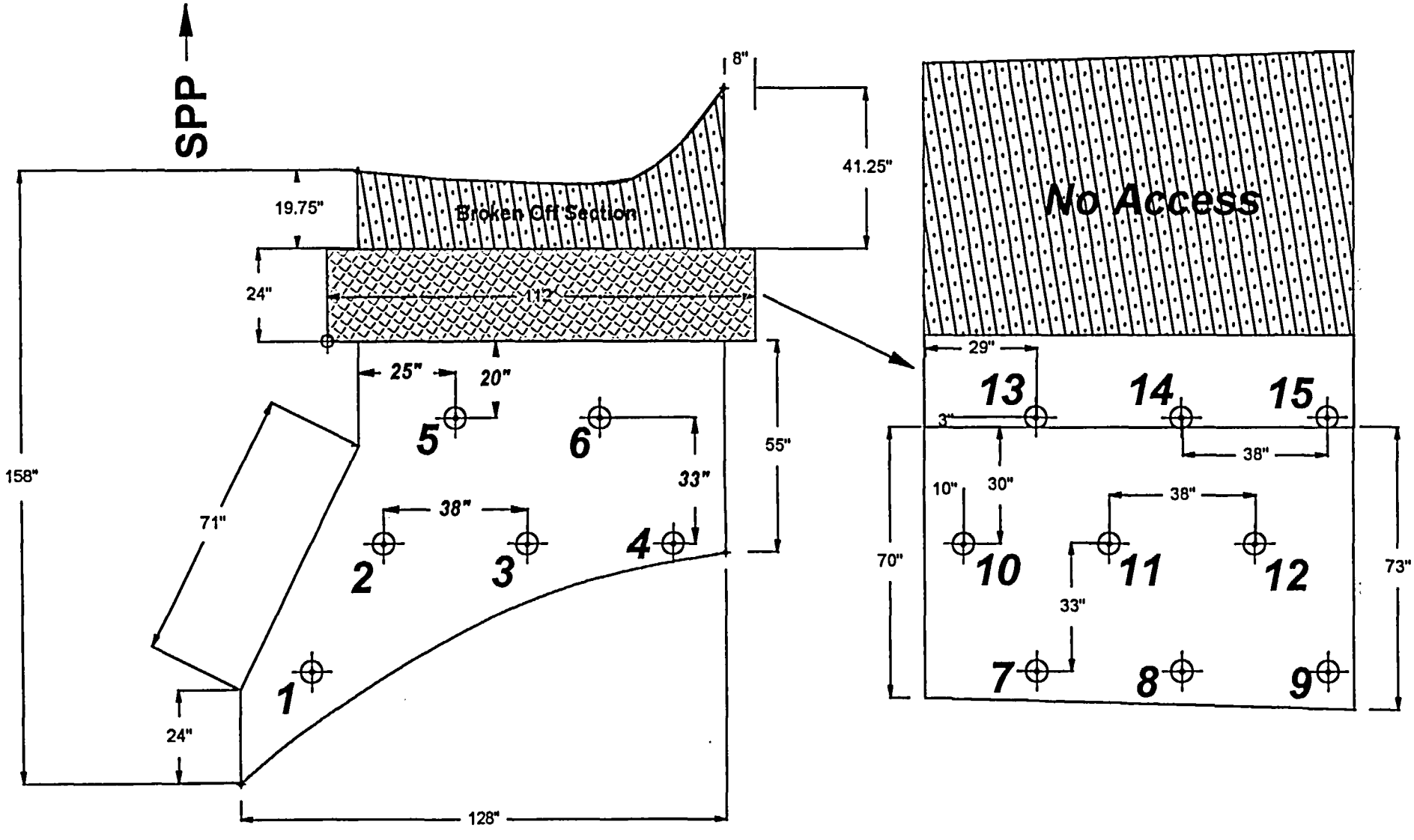

Ceiling of Transition Area to SPP

ATTACHMENT 7.3

ATTACHMENT 7.4

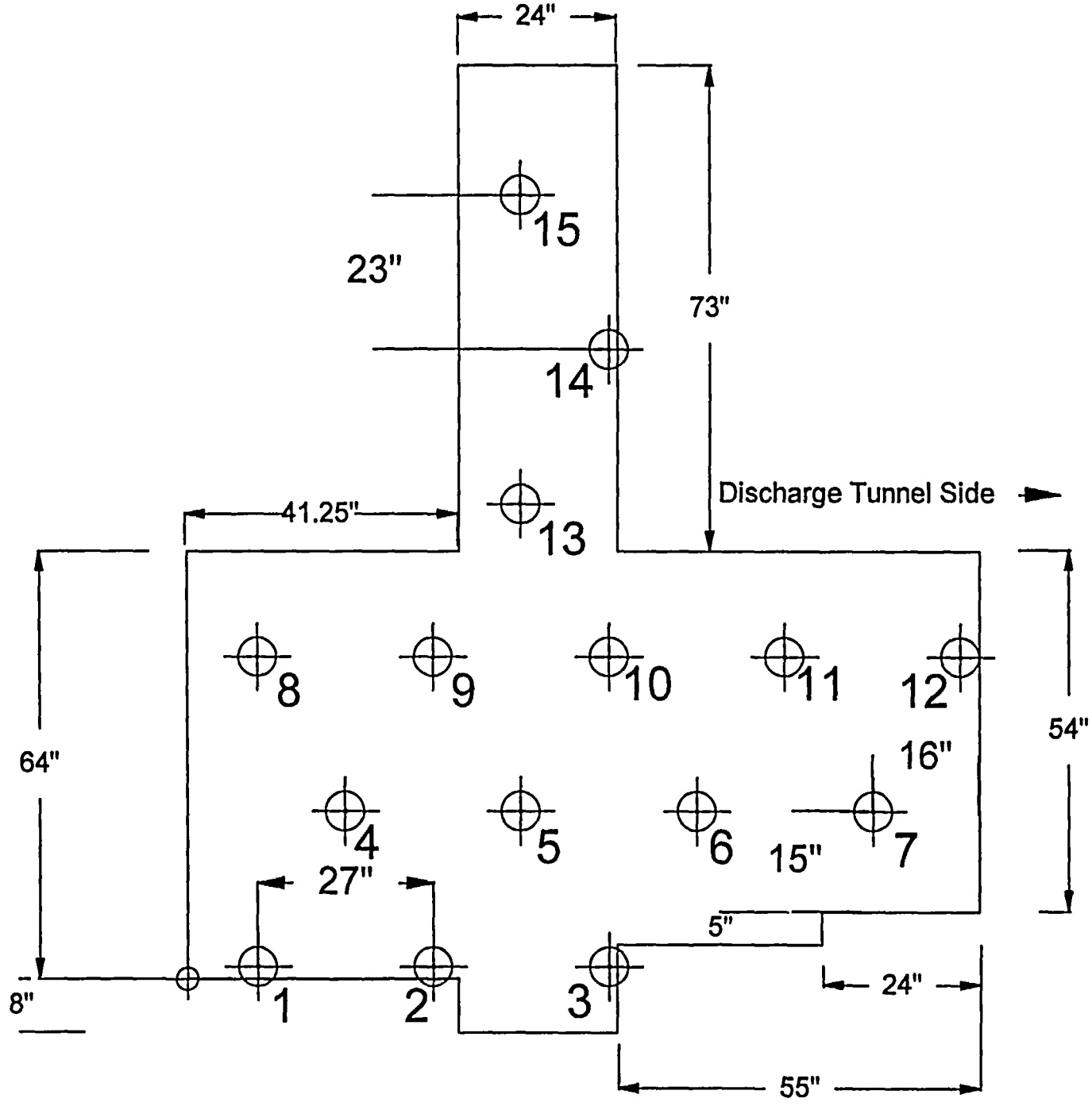

North Wall of Transition Area to SPP

South Wall of Transition Area to SPP

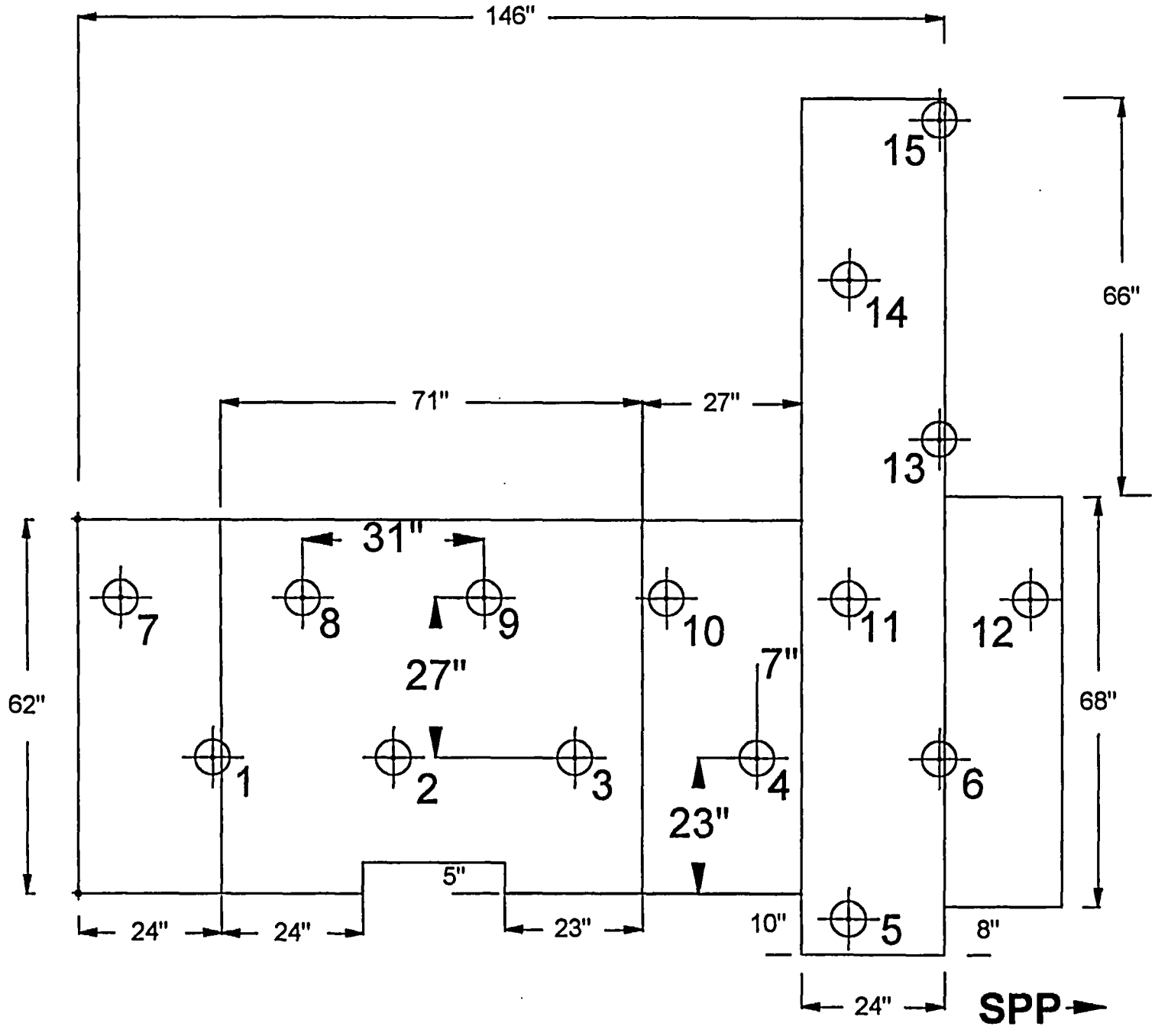

ATTACHMENT 7.5

Exposed Section of Steel Door/Frame

To Spray Pump Pit

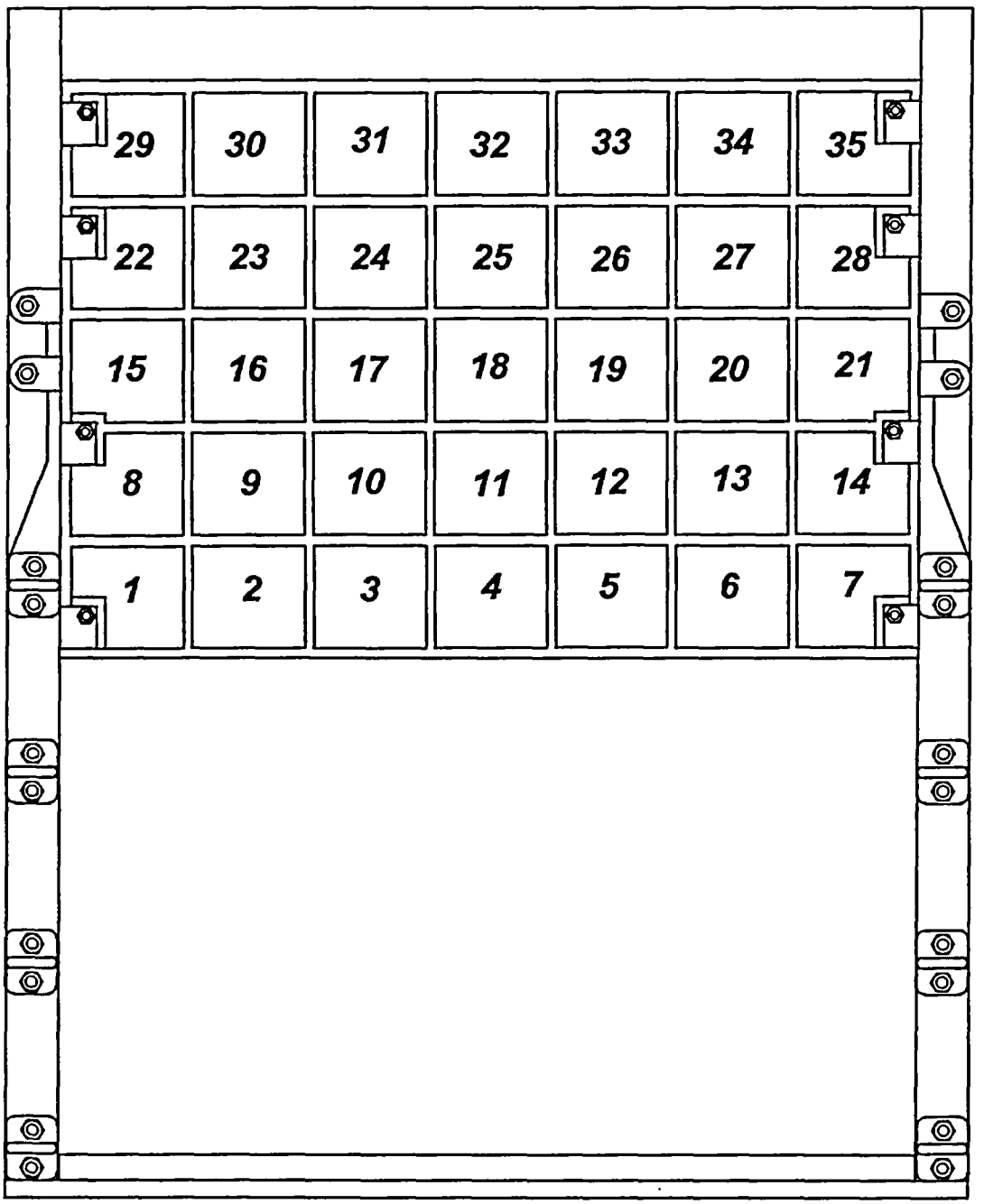

Door - Bottom Edge

Door - Back Edge

ATTACHMENT 7.6

Transition Area Variability Measurements SR-0142

	126188	Jim Fox	Time	Detector	Counts	Count Time (sec)	Mode	Designator		FSS-779	BHB	
										Steel CF(cpm) ⇒	0	
										Shielded	Unshielded	NET cpm
9	SS25 FP1 FS	7/14/2004	11:16	1	2.10E+02	60	SCL	Shielded	β	2.10E+02		
10	SS25 FP1 FU	7/14/2004	11:18	1	2.77E+02	60	SCL	Unshielded	β		2.77E+02	6.70E+01
11	SS25 FP2 FS	7/14/2004	11:20	1	2.17E+02	60	SCL	Shielded	β	2.17E+02		
12	SS25 FP2 FU	7/14/2004	11:21	1	3.05E+02	60	SCL	Unshielded	β		3.05E+02	8.80E+01
13	SS25 FP3 FS	7/14/2004	11:22	1	2.17E+02	60	SCL	Shielded	β	2.17E+02		
14	SS25 FP3 FU	7/14/2004	11:24	1	3.10E+02	60	SCL	Unshielded	β		3.10E+02	9.30E+01
15	SS25 FP4 FS	7/14/2004	11:25	1	2.14E+02	60	SCL	Shielded	β	2.14E+02		
16	SS25 FP4 FU	7/14/2004	11:26	1	3.12E+02	60	SCL	Unshielded	β		3.12E+02	9.80E+01
17	SS25 FP5 FS	7/14/2004	11:28	1	2.28E+02	60	SCL	Shielded	β	2.28E+02		
18	SS25 FP5 FU	7/14/2004	11:29	1	3.00E+02	60	SCL	Unshielded	β		3.00E+02	7.20E+01
19	SS25 FP6 FS	7/14/2004	11:30	1	2.17E+02	60	SCL	Shielded	β	2.17E+02		
20	SS25 FP6 FU	7/14/2004	11:32	1	3.06E+02	60	SCL	Unshielded	β		3.06E+02	8.90E+01
23	SS25 FP1 TS	7/14/2004	13:04	1	2.08E+02	60	SCL	Shielded	β	2.08E+02		
24	SS25 FP1 TU	7/14/2004	13:05	1	3.17E+02	60	SCL	Unshielded	β		3.17E+02	1.09E+02
25	SS25 FP2 TS	7/14/2004	13:06	1	2.47E+02	60	SCL	Shielded	β	2.47E+02		
26	SS25 FP2 TU	7/14/2004	13:08	1	2.54E+02	60	SCL	Unshielded	β		2.54E+02	7.00E+00
27	SS25 FP3 TS	7/14/2004	13:09	1	2.03E+02	60	SCL	Shielded	β	2.03E+02		
28	SS25 FP3 TU	7/14/2004	13:11	1	2.95E+02	60	SCL	Unshielded	β		2.95E+02	9.20E+01
29	SS25 FP4 TS	7/14/2004	13:12	1	2.12E+02	60	SCL	Shielded	β	2.12E+02		
30	SS25 FP4 TU	7/14/2004	13:13	1	3.12E+02	60	SCL	Unshielded	β		3.12E+02	1.00E+02
31	SS25 FP1 BS	7/14/2004	13:16	1	2.41E+02	60	SCL	Shielded	β	2.41E+02		
32	SS25 FP1 BU	7/14/2004	13:17	1	2.72E+02	60	SCL	Unshielded	β		2.72E+02	3.10E+01
33	SS25 FP2 BS	7/14/2004	13:18	1	1.99E+02	60	SCL	Shielded	β	1.99E+02		
34	SS25 FP2 BU	7/14/2004	13:20	1	3.09E+02	60	SCL	Unshielded	β		3.09E+02	1.10E+02
35	SS25 FP3 BS	7/14/2004	13:21	1	2.34E+02	60	SCL	Shielded	β	2.34E+02		
36	SS25 FP3 BU	7/14/2004	13:23	1	3.11E+02	60	SCL	Unshielded	β		3.11E+02	7.70E+01
37	SS25 FP4 BS	7/14/2004	13:24	1	2.06E+02	60	SCL	Shielded	β	2.06E+02		
38	SS25 FP4 BU	7/14/2004	13:26	1	3.07E+02	60	SCL	Unshielded	β		3.07E+02	1.01E+02
51	SS25 FP1 CS	7/14/2004	14:04	1	2.16E+02	60	SCL	Shielded	β	2.16E+02		
52	SS25 FP1 CU	7/14/2004	14:06	1	3.61E+02	60	SCL	Unshielded	β		3.61E+02	1.45E+02
53	SS25 FP2 CS	7/14/2004	14:07	1	2.13E+02	60	SCL	Shielded	β	2.13E+02		
54	SS25 FP2 CU	7/14/2004	14:08	1	4.50E+02	60	SCL	Unshielded	β		4.50E+02	2.37E+02
55	SS25 FP1 NS	7/14/2004	14:10	1	1.89E+02	60	SCL	Shielded	β	1.89E+02		
56	SS25 FP1 NU	7/14/2004	14:11	1	2.48E+02	60	SCL	Unshielded	β		2.48E+02	5.90E+01
57	SS25 FP2 NS	7/14/2004	14:13	1	1.80E+02	60	SCL	Shielded	β	1.80E+02		
58	SS25 FP2 NU	7/14/2004	14:14	1	2.75E+02	60	SCL	Unshielded	β		2.75E+02	9.50E+01
59	SS25 FP3 NS	7/14/2004	14:15	1	1.82E+02	60	SCL	Shielded	β	1.82E+02		
60	SS25 FP3 NU	7/14/2004	14:16	1	2.29E+02	60	SCL	Unshielded	β		2.29E+02	4.70E+01
61	SS25 FP4 NS	7/14/2004	14:18	1	2.22E+02	60	SCL	Shielded	β	2.22E+02		
62	SS25 FP4 NU	7/14/2004	14:19	1	2.72E+02	60	SCL	Unshielded	β		2.72E+02	5.00E+01
63	SS25 FP1 SWS	7/14/2004	14:20	1	2.24E+02	60	SCL	Shielded	β	2.24E+02		
64	SS25 FP1 SWU	7/14/2004	14:22	1	2.55E+02	60	SCL	Unshielded	β		2.55E+02	3.10E+01
65	SS25 FP2 SWS	7/14/2004	14:23	1	1.88E+02	60	SCL	Shielded	β	1.88E+02		
66	SS25 FP2 SWU	7/14/2004	14:24	1	3.20E+02	60	SCL	Unshielded	β		3.20E+02	1.32E+02
67	SS25 FP3 SWS	7/14/2004	14:26	1	2.14E+02	60	SCL	Shielded	β	2.14E+02		
68	SS25 FP3 SWU	7/14/2004	14:27	1	2.72E+02	60	SCL	Unshielded	β		2.72E+02	5.80E+01
69	SS25 FP4 SWS	7/14/2004	14:29	1	1.73E+02	60	SCL	Shielded	β	1.73E+02		
70	SS25 FP4 SWU	7/14/2004	14:30	1	3.75E+02	60	SCL	Unshielded	β		3.75E+02	2.02E+02
71	SS25 FP5 SWS	7/14/2004	14:31	1	1.96E+02	60	SCL	Shielded	β	1.96E+02		
72	SS25 FP5 SWU	7/14/2004	14:32	1	3.21E+02	60	SCL	Unshielded	β		3.21E+02	1.25E+02
73	SS25 FP6 SWS	7/14/2004	14:34	1	2.28E+02	60	SCL	Shielded	β	2.28E+02		
74	SS25 FP6 SWU	7/14/2004	14:35	1	3.54E+02	60	SCL	Unshielded	β		3.54E+02	1.26E+02
									Minimum ⇒	1.73E+02	2.29E+02	7.00E+00
									Maximum ⇒	2.47E+02	4.60E+02	2.37E+02
									Mean ⇒	2.11E+02	3.05E+02	9.39E+01
									Sigma ⇒	1.84E+01	4.54E+01	6.00E+01

ATTACHMENT 8 - 1

Spray Pump Pit Variability Measurements SR-0108

	126179	K. Lane	Time	Detector	Counts	Count Time (sec)	Mode	Designator		FSS-485	BHB	
									β	Steel CF(cpm) ⇒	0	
									β	Shielded	Unshielded	NET cpm
2	SS9 FP1S	3/24/2004	14:13	1	1.86E+02	60	SCL	Shielded	β	1.86E+02		
3	SS9 FP1U	3/24/2004	14:15	1	2.49E+02	60	SCL	Unshielded	β		2.49E+02	6.30E+01
4	SS9 FP1S	3/24/2004	14:17	1	2.10E+02	60	SCL	Shielded	β	2.10E+02		
5	SS9 FP1U	3/24/2004	14:18	1	2.23E+02	60	SCL	Unshielded	β		2.23E+02	1.30E+01
6	SS9 FP1S	3/24/2004	14:20	1	1.89E+02	60	SCL	Shielded	β	1.89E+02		
7	SS9 FP1U	3/24/2004	14:21	1	2.53E+02	60	SCL	Unshielded	β		2.53E+02	6.40E+01
8	SS9 FP1S	3/24/2004	14:23	1	1.75E+02	60	SCL	Shielded	β	1.75E+02		
9	SS9 FP1U	3/24/2004	14:24	1	2.58E+02	60	SCL	Unshielded	β		2.58E+02	8.30E+01
10	SS9 FP1S	3/24/2004	14:26	1	1.99E+02	60	SCL	Shielded	β	1.99E+02		
11	SS9 FP1U	3/24/2004	14:28	1	2.42E+02	60	SCL	Unshielded	β		2.42E+02	4.30E+01
13	SS9 FP1S	3/24/2004	14:34	1	1.37E+02	60	SCL	Shielded	β	1.37E+02		
14	SS9 FP1U	3/24/2004	14:36	1	1.68E+02	60	SCL	Unshielded	β		1.68E+02	3.10E+01
15	SS9 FP1S	3/24/2004	14:38	1	1.39E+02	60	SCL	Shielded	β	1.39E+02		
16	SS9 FP1U	3/24/2004	14:41	1	2.22E+02	60	SCL	Unshielded	β		2.22E+02	8.30E+01
17	SS9 FP1S	3/24/2004	14:43	1	1.47E+02	60	SCL	Shielded	β	1.47E+02		
18	SS9 FP1U	3/24/2004	14:45	1	2.07E+02	60	SCL	Unshielded	β		2.07E+02	6.00E+01
19	SS9 FP1S	3/24/2004	14:46	1	1.64E+02	60	SCL	Shielded	β	1.64E+02		
20	SS9 FP1U	3/24/2004	14:48	1	2.14E+02	60	SCL	Unshielded	β		2.14E+02	5.00E+01
21	SS9 FP1S	3/24/2004	14:51	1	1.69E+02	60	SCL	Shielded	β	1.69E+02		
22	SS9 FP1U	3/24/2004	14:52	1	2.03E+02	60	SCL	Unshielded	β		2.03E+02	3.40E+01
23	SS9 FP1S	3/24/2004	14:55	1	1.80E+02	60	SCL	Shielded	β	1.80E+02		
24	SS9 FP1U	3/24/2004	14:57	1	2.54E+02	60	SCL	Unshielded	β		2.54E+02	7.40E+01
									Minimum ⇒	1.37E+02	1.68E+02	1.30E+01
									Maximum ⇒	2.10E+02	2.58E+02	8.30E+01
									Mean ⇒	1.72E+02	2.27E+02	5.44E+01
									Sigma ⇒	2.40E+01	2.78E+01	2.25E+01

ATTACHMENT 8.2

Williamsburg Concrete Background Measurements

37122N21	Instrument 95348	RLM6220	Time	Detector	Counts	Count Time (sec)	Mode	Designator		FSS-001	BHB
0	BKGND	1/4/2002	8:52	1	7.26E+03	1800	SCL	Inital Background	β		
1	Source Check	1/4/2002	9:07	1	1.79E+05	60	SCL	Source	β		
2	BKGND	1/4/2002	10:05	2	4.40E+01	1800	SCL	Inital Background	α	*Concrete CF(cpm) ⇒*	0
14	Source Check	1/4/2002	10:39	2	1.51E+05	60	SCL	Source	α	Shielded	Unshielded
15	CON A1S	1/4/2002	13:00	1	2.78E+02	60	SCL	Shielded	β	2.78E+02	
16	CON A1U	1/4/2002	13:02	1	3.88E+02	60	SCL	Unshielded	β		3.88E+02
17	CON A2S	1/4/2002	13:20	1	2.39E+02	60	SCL	Shielded	β	2.39E+02	
18	CON A2U	1/4/2002	13:21	1	2.22E+02	60	SCL	Unshielded	β		2.22E+02
19	CON A3S	1/4/2002	13:28	1	2.39E+02	60	SCL	Shielded	β	2.39E+02	
20	CON A3U	1/4/2002	13:30	1	2.62E+02	60	SCL	Unshielded	β		2.62E+02
21	CON A4S	1/4/2002	13:36	1	2.45E+02	60	SCL	Shielded	β	2.45E+02	
22	CON A4U	1/4/2002	13:38	1	2.71E+02	60	SCL	Unshielded	β		2.71E+02
23	CON A5S	1/4/2002	13:58	1	2.00E+02	60	SCL	Shielded	β	2.00E+02	
24	CON A5U	1/4/2002	14:00	1	2.82E+02	60	SCL	Unshielded	β		2.82E+02
25	CON A6S	1/4/2002	14:03	1	1.84E+02	60	SCL	Shielded	β	1.84E+02	
26	CON A6U	1/4/2002	14:05	1	3.10E+02	60	SCL	Unshielded	β		3.10E+02
27	CON A7S	1/4/2002	14:09	1	1.98E+02	60	SCL	Shielded	β	1.98E+02	
28	CON A7U	1/4/2002	14:10	1	3.15E+02	60	SCL	Unshielded	β		3.15E+02
29	CON A8S	1/4/2002	14:19	1	2.34E+02	60	SCL	Shielded	β	2.34E+02	
30	CON A8S	1/4/2002	14:22	1	2.31E+02	60	SCL	Shielded	β	2.31E+02	
31	CON A8U	1/4/2002	14:24	1	2.88E+02	60	SCL	Unshielded	β		2.88E+02
32	CON A9S	1/4/2002	14:31	1	2.65E+02	60	SCL	Shielded	β	2.65E+02	
33	CON A9U	1/4/2002	14:33	1	2.89E+02	60	SCL	Unshielded	β		2.89E+02
34	CON A10S	1/4/2002	14:42	1	2.46E+02	60	SCL	Shielded	β	2.46E+02	
35	CON A10U	1/4/2002	14:43	1	3.16E+02	60	SCL	Unshielded	β		3.16E+02
36	CON A11S	1/4/2002	15:10	1	1.95E+02	60	SCL	Shielded	β	1.95E+02	
37	CON A11U	1/4/2002	15:12	1	2.94E+02	60	SCL	Unshielded	β		2.94E+02
38	CON A12S	1/4/2002	15:13	1	2.21E+02	60	SCL	Shielded	β	2.21E+02	
39	CON A12U	1/4/2002	15:14	1	2.84E+02	60	SCL	Unshielded	β		2.84E+02
40	CON A13S	1/4/2002	15:23	1	1.74E+02	60	SCL	Shielded	β	1.74E+02	
41	CON A13U	1/4/2002	15:24	1	2.94E+02	60	SCL	Unshielded	β		2.94E+02
42	CON A14S	1/4/2002	15:25	1	1.96E+02	60	SCL	Shielded	β	1.96E+02	
43	CON A14U	1/4/2002	15:26	1	3.33E+02	60	SCL	Unshielded	β		3.33E+02
44	CON A15S	1/4/2002	15:28	1	2.16E+02	60	SCL	Shielded	β	2.16E+02	
45	CON A15U	1/4/2002	15:29	1	3.45E+02	60	SCL	Unshielded	β		3.45E+02
46	CON A16S	1/4/2002	15:30	1	1.83E+02	60	SCL	Shielded	β	1.83E+02	
47	CON A16U	1/4/2002	15:31	1	3.13E+02	60	SCL	Unshielded	β		3.13E+02
48	CON A17S	1/4/2002	15:33	1	1.82E+02	60	SCL	Shielded	β	1.82E+02	
49	CON A17U	1/4/2002	15:34	1	3.22E+02	60	SCL	Unshielded	β		3.22E+02
50	CON A18S	1/4/2002	15:35	1	1.84E+02	60	SCL	Shielded	β	1.84E+02	
51	CON A18U	1/4/2002	15:36	1	3.24E+02	60	SCL	Unshielded	β		3.24E+02
52	CON A19S	1/4/2002	15:37	1	1.91E+02	60	SCL	Shielded	β	1.91E+02	
53	CON A19U	1/4/2002	15:39	1	3.07E+02	60	SCL	Unshielded	β		3.07E+02
54	CON A20S	1/4/2002	15:40	1	1.94E+02	60	SCL	Shielded	β	1.94E+02	
55	CON A20U	1/4/2002	15:41	1	3.33E+02	60	SCL	Unshielded	β		3.33E+02
56	CON A21S	1/4/2002	15:57	1	2.23E+02	60	SCL	Shielded	β	2.23E+02	
57	CON A21U	1/4/2002	15:58	1	2.92E+02	60	SCL	Unshielded	β		2.92E+02
58	CON A22S	1/4/2002	15:59	1	1.72E+02	60	SCL	Shielded	β	1.72E+02	
59	CON A22U	1/4/2002	16:00	1	2.80E+02	60	SCL	Unshielded	β		2.80E+02
60	CON A23S	1/4/2002	16:01	1	1.94E+02	60	SCL	Shielded	β	1.94E+02	
61	CON A23U	1/4/2002	16:02	1	3.29E+02	60	SCL	Unshielded	β		3.29E+02
62	CON A24S	1/4/2002	16:04	1	1.87E+02	60	SCL	Shielded	β	1.87E+02	
63	CON A24U	1/4/2002	16:05	1	3.48E+02	60	SCL	Unshielded	β		3.48E+02
64	CON A25S	1/4/2002	16:06	1	2.07E+02	60	SCL	Shielded	β	2.07E+02	
65	CON A25U	1/4/2002	16:07	1	3.72E+02	60	SCL	Unshielded	β		3.72E+02
66	CON A26S	1/4/2002	16:09	1	2.09E+02	60	SCL	Shielded	β	2.09E+02	
67	CON A26U	1/4/2002	16:10	1	3.26E+02	60	SCL	Unshielded	β		3.26E+02
68	CON A27S	1/4/2002	16:11	1	2.07E+02	60	SCL	Shielded	β	2.07E+02	
69	CON A27U	1/4/2002	16:12	1	3.30E+02	60	SCL	Unshielded	β		3.30E+02
70	CON A28S	1/4/2002	16:14	1	2.30E+02	60	SCL	Shielded	β	2.30E+02	
71	CON A28U	1/4/2002	16:15	1	3.06E+02	60	SCL	Unshielded	β		3.06E+02
72	CON A29S	1/4/2002	16:20	1	2.13E+02	60	SCL	Shielded	β	2.13E+02	
73	CON A29U	1/4/2002	16:21	1	2.58E+02	60	SCL	Unshielded	β		2.58E+02
74	CON A30S	1/4/2002	16:24	1	2.33E+02	60	SCL	Shielded	β	2.33E+02	
75	CON A30U	1/4/2002	16:25	1	2.89E+02	60	SCL	Unshielded	β		2.89E+02
76	CON A31S	1/4/2002	16:28	1	1.84E+02	60	SCL	Shielded	β	1.84E+02	
77	CON A31U	1/4/2002	16:29	1	2.63E+02	60	SCL	Unshielded	β		2.63E+02
—	Source Check	1/4/2002	17:27	1	1.70E+05	60	SCL	—	β		
										Minimum ⇒	1.72E+02 / 2.22E+02
										Maximum ⇒	2.78E+02 / 3.88E+02
										Mean ⇒	2.11E+02 / 3.06E+02
										Sigma ⇒	2.69E+01 / 3.45E+01

ATTACHMENT 8.3

ORIGINAL

Exhibit 1
Survey Unit Inspection Check Sheet

SECTION 1 - SURVEY UNIT INSPECTION DESCRIPTION

Survey Unit #	SS9-1, SS10, SS11			Survey Unit Location	Spray Pump Pit Floor, Walls Below & Above 795' el
Date	7/29/04	Time	0800	Inspection Team Members	D. Sarge

SECTION 2 - SURVEY UNIT INSPECTION SCOPE

Inspection Requirements (Check the appropriate Yes/No answer.)	Yes	No	N/A
1. Have sufficient surveys (i.e., post remediation, characterization, etc.) been obtained for the survey unit?	X		
2. Do the surveys (from Question 1) demonstrate that the survey unit will most likely pass the FSS?	X		
3. Is the physical work (i.e., remediation & housekeeping) in or around the survey unit complete?	X		
4. Have all tools, non-permanent equipment, and material not needed to perform the FSS been removed?	X		
5. Are the survey surfaces relatively free of loose debris (i.e., dirt, concrete dust, metal filings, etc.)?	X		
6. Are the survey surfaces relatively free of liquids (i.e., water, moisture, oil, etc.)?	X		
7. Are the survey surfaces free of all paint, which has the potential to shield radiation?	X		
8. Have the Surface Measurement Test Areas (SMTA) been established? (Refer to Exhibit 2 for instructions.)	X		
9. Have the Surface Measurement Test Areas (SMTA) data been collected? (Refer to Exhibit 2 for instructions.)	X		
10. Are the survey surfaces easily accessible? (No scaffolding, high reach, etc. is needed to perform the FSS)	X		
11. Is lighting adequate to perform the FSS?	X		
12. Is the area industrially safe to perform the FSS? (Evaluate potential fall & trip hazards, confined spaces, etc.)	X		
13. Have photographs been taken showing the overall condition of the area?	X		
14. Have all unsatisfactory conditions been resolved?	X		

NOTE: If a "No" answer is obtained above, the inspector should immediately correct the problem or initiate corrective actions through the responsible site department, as applicable. Document actions taken and/or justifications in the "Comments" section below. Attach additional sheets as necessary.

Comments:

Survey Unit Inspector (print/sign)	D. Sarge / [signature]	Date	7/29/04
Survey Designer (print/sign)	B. BROSEY / B. Brosey	Date	8/3/04

ATTACHMENT 9.1

ORIGINAL

EXHIBIT 3
Surface Measurement Test Area (SMTA) Data Sheet

SECTION 1 - DESCRIPTION					
SMTA Number	SS9-1-1	Survey Unit Number	SS9-1		
SMTA Location	Spray Pump Pit Floor				
Survey Unit Inspector	D. Sarge /	Date	6/29/04	Time	0930

SECTION 2 - CALIPER INFORMATION & PERSONNEL INVOLVED					
Caliper Manufacturer	MITOTOYO ~~N/A~~ 7/21/01	Caliper Model Number	CD-6" CS		
Caliper Serial Number	763893	Calibration Due Date (as applicable)	N/A		
Rad Con Technician	D. Sarge /	Date	6/29/04	Time	0930
Survey Unit Inspector Approval	D. Sarge /	Date	6/29/04		

SECTION 3 - MEASUREMENT RESULTS

SMTA Grid Map & Measurement Results in Units of mm
(Insert Results in White Blocks Below)

1 2.1	7 0.9	13 5.0	19 5.9	25 3.5	31 5.0
2 3.6	8 6.0	14 3.4	20 2.1	26 3.7	32 3.0
3 2.7	9 4.8	15 3.7	21 1.9	27 0.7	33 1.9
4 2.3	10 2.9	16 2.0	22 1.6	28 0.7	34 0.8
5 1.0	11 1.6	17 1.8	23 1.0	29 1.2	35 1.3
6 1.3	12 0.6	18 1.0	24 1.5	30 1.0	36 1.6

Average Measurement –2.4 mm

Comments

- Floor surfaces indicate similar depth irregularity similar to these readings.

Additional Measurements Required

ATTACHMENT 9.2

ORIGINAL

EXHIBIT 3
Surface Measurement Test Area (SMTA) Data Sheet

SECTION 1 - DESCRIPTION					
SMTA Number	SMTA-SS10-1	Survey Unit Number	SS10		
SMTA Location	Spray Pump Pit Walls Below 795' el				
Survey Unit Inspector	D. Sarge	Date	7/29/04	Time	0940

SECTION 2 - CALIPER INFORMATION & PERSONNEL INVOLVED					
Caliper Manufacturer	Mitotoyo	Caliper Model Number	CD-6"CS		
Caliper Serial Number	763893	Calibration Due Date (as applicable)	N/A		
Rad Con Technician	D. Sarge /	Date	07/29/04	Time	0815
Survey Unit Inspector Approval	D. Sarge /	Date	7/29/04		

SECTION 3 - MEASUREMENT RESULTS

SMTA Grid Map & Measurement Results in Units of mm
(Insert Results in White Blocks Below)

1 2.5	7 15.3	13 17.3	19 21.4	25 12.1	31 4.4
2 16.3	8 5.6	14 24.4	20 14.6	26 23.2	32 7.2
3 4.2	9 7.5	15 17	21 18.5	27 18.3	33 6
4 4.6	10 10.5	16 14.3	22 4.0	28 17.3	34 2.9
5 3.3	11 4.9	17 13.7	23 9.9	29 8.9	35 2.6
6 4.6	12 2.7	18 13.8	24 13.7	30 3.5	36 1.6

Average Measurement –10.4 mm

Comments

- Wall surfaces throughout SS10 up to 795' el indicate depth irregularity similar to these readings.
- Numerous I-Beams and Rebar are protruding from walls around pit. (795' el)
- A 2-inch pipe is protruding from North wall approx. 2 inches at 795"el.

Additional Measurements Required

ATTACHMENT 9.3

Exhibit 1
Survey Unit Inspection Check Sheet

ORIGINAL

SECTION 1 - SURVEY UNIT INSPECTION DESCRIPTION

Survey Unit #	SS25			Survey Unit Location	SSGS – Transition Area from Discharge Tunnel to Spray Pond Pump Pit
Date	7/29/04	Time	1010	Inspection Team Members	D.Sarge

SECTION 2 - SURVEY UNIT INSPECTION SCOPE

Inspection Requirements (Check the appropriate Yes/No answer.)	Yes	No	N/A
1. Have sufficient surveys (i.e., post remediation, characterization, etc.) been obtained for the survey unit?	X		
2. Do the surveys (from Question 1) demonstrate that the survey unit will most likely pass the FSS?	X		
3. Is the physical work (i.e., remediation & housekeeping) in or around the survey unit complete?	X		
4. Have all tools, non-permanent equipment, and material not needed to perform the FSS been removed?	X		
5. Are the survey surfaces relatively free of loose debris (i.e., dirt, concrete dust, metal filings, etc.)?	X		
6. Are the survey surfaces relatively free of liquids (i.e., water, moisture, oil, etc.)?		X	
7. Are the survey surfaces free of all paint, which has the potential to shield radiation?	X		
8. Have the Surface Measurement Test Areas (SMTA) been established? (Refer to Exhibit 2 for instructions.)	X		
9. Have the Surface Measurement Test Areas (SMTA) data been collected? (Refer to Exhibit 2 for instructions.)	X		
10. Are the survey surfaces easily accessible? (No scaffolding, high reach, etc. is needed to perform the FSS)	X		
11. Is lighting adequate to perform the FSS?	X		
12. Is the area industrially safe to perform the FSS? (Evaluate potential fall & trip hazards, confined spaces, etc.)		X	
13. Have photographs been taken showing the overall condition of the area?	X		
14. Have all unsatisfactory conditions been resolved?	X		

NOTE: If a "No" answer is obtained above, the inspector should immediately correct the problem or initiate corrective actions through the responsible site department, as applicable. Document actions taken and/or justifications in the "Comments" section below. Attach additional sheets as necessary.

Comments:

Response to Question 6: Water is present. Must be dried prior top FSS. Notified L. Shamenek. Response was D and D will dry prior to FSS.

Response to Question 12: Low ceiling and gate pose potential head injury. Notified L. Shamenek. Response was care must be taken while performing FSS.

Survey Unit Inspector (print/sign)	D. Sarge / [signature]	Date	7/29/04
Survey Designer (print/sign)	B. BROSEY / [signature]	Date	8/3/04

ATTACHMENT 9.4

ORIGINAL

Exhibit 1
Survey Unit Inspection Check Sheet

SECTION 1 - SURVEY UNIT INSPECTION DESCRIPTION

Survey Unit #	SS25			Survey Unit Location	SSGS – Transition area from Discharge Tunnel to Spray Pond Pump Pit
Date	7/19/04	Time	1600	Inspection Team Members	D. Sarge

SECTION 2 - SURVEY UNIT INSPECTION SCOPE

Inspection Requirements (Check the appropriate Yes/No answer.)	Yes	No	N/A
1. Have sufficient surveys (i.e., post remediation, characterization, etc.) been obtained for the survey unit?	X		
2. Do the surveys (from Question 1) demonstrate that the survey unit will most likely pass the FSS?	X		
3. Is the physical work (i.e., remediation & housekeeping) in or around the survey unit complete?	X		
4. Have all tools, non-permanent equipment, and material not needed to perform the FSS been removed?	X		
5. Are the survey surfaces relatively free of loose debris (i.e., dirt, concrete dust, metal filings, etc.)?		X	
6. Are the survey surfaces relatively free of liquids (i.e., water, moisture, oil, etc.)?		X	
7. Are the survey surfaces free of all paint, which has the potential to shield radiation?	X		
8. Have the Surface Measurement Test Areas (SMTA) been established? (Refer to Exhibit 2 for instructions.)	X		
9. Have the Surface Measurement Test Areas (SMTA) data been collected? (Refer to Exhibit 2 for instructions.)	X		
10. Are the survey surfaces easily accessible? (No scaffolding, high reach, etc. is needed to perform the FSS)	X		
11. Is lighting adequate to perform the FSS?	X		
12. Is the area industrially safe to perform the FSS? (Evaluate potential fall & trip hazards, confined spaces, etc.)		X	
13. Have photographs been taken showing the overall condition of the area?	X		
14. Have all unsatisfactory conditions been resolved?		X	

NOTE: If a "No" answer is obtained above, the inspector should immediately correct the problem or initiate corrective actions through the responsible site department, as applicable. Document actions taken and/or justifications in the "Comments" section below. Attach additional sheets as necessary.

Comments:

Response to Question 5: Sediment/metal flakes are present on floor of gate trench. Needs to be removed prior to FSS.

Response to Question 6: Water is present on floor throughout survey unit. Flow needs to be isolated/dried prior to FSS.

Response to Question 12: Low ceiling present in survey unit. Additionally, gate poses head injury.

Survey Unit Inspector (print/sign)	D. Sarge / [signature]	Date	7/19/04
Survey Designer (print/sign)	B. Brosey / B. Brown	Date	7/20/04

ATTACHMENT 9.5

EXHIBIT 3
Surface Measurement Test Area (SMTA) Data Sheet

SECTION 1 - DESCRIPTION					
SMTA Number	SMTA-SS-25-1	Survey Unit Number	SS25		
SMTA Location	SSGS Transition Area from Discharge Tunnel to the Spray Pond Pump Pit (Ceiling)				
Survey Unit Inspector	D. Sarge	Date	7/19/04	Time	1600

SECTION 2 - CALIPER INFORMATION & PERSONNEL INVOLVED					
Caliper Manufacturer	Mitotoyo	Caliper Model Number	CD-6" CS		
Caliper Serial Number	763893	Calibration Due Date (as applicable)	N/A		
Rad Con Technician	D. Sarge	Date	7/19/04	Time	1600
Survey Unit Inspector Approval	D. Sarge / [signature]	Date	1600		

SECTION 3 - MEASUREMENT RESULTS

SMTA Grid Map & Measurement Results in Units of mm
(Insert Results in White Blocks Below)

1	7	13	19	25	31
2	8	14	20	26	32
3	9	15	21	27	33
4	10	16	22	28	34
5	11	17	23	29	35
6	12	18	24	30	36

Average Measurement - mm

Comments

See below

Additional Measurements Required

Due to difficulty of template adherence to surface, depth measurements were obtained using the Mitotoyo Caliper and a detector template to simulate actual measurement distance. Twelve measurements were obtained, spaced throughout survey surface. Depth results range from 14 mm to 52 mm with an average of 40 mm.

ATTACHMENT 9.6

SECTION 1 - DESCRIPTION

SMTA Number	SMTA-SS-25-3	Survey Unit Number	SS25
SMTA Location	SSGS Transition Area from Discharge Tunnel to the Spray Pond Pump Pit (Leading Edge of Transition Wall - Both Sides)		

Survey Unit Inspector	D. Sarge	Date	7/19/04	Time	1600

SECTION 2 - CALIPER INFORMATION & PERSONNEL INVOLVED

Caliper Manufacturer	Mitotoyo	Caliper Model Number	CD-6" CS
Caliper Serial Number	763893	Calibration Due Date (as applicable)	N/A

Rad Con Technician	D. Sarge	Date	7/19/04	Time	1600

Survey Unit Inspector Approval	D. Sarge / [signature]	Date	1600

SECTION 3 - MEASUREMENT RESULTS

SMTA Grid Map & Measurement Results in Units of mm
(Insert Results in White Blocks Below)

1	7	13	19	25	31
2	8	14	20	26	32
3	9	15	21	27	33
4	10	16	22	28	34
5	11	17	23	29	35
6	12	18	24	30	36

Average Measurement - mm

Comments

See below

Additional Measurements Required

Due to narrow band of rough surface (approx. 1 foot), depth measurements were obtained using the Mitotoyo Caliper and a detector template to simulate actual measurement distance. Ten measurements were obtained, spaced throughout survey surface. Depth results range from 10 mm to 70 mm with an average of 32 mm.

SECTION 1 - DESCRIPTION

SMTA Number	SMTA-SS-25-5	Survey Unit Number	SS25
SMTA Location	SSGS Transition Area from Discharge Tunnel to the Spray Pond Pump Pit (Steel Gate)		

Survey Unit Inspector	D. Sarge	Date	7/20/04	Time	1000

SECTION 2 - CALIPER INFORMATION & PERSONNEL INVOLVED

Caliper Manufacturer	Mitotoyo	Caliper Model Number	CD-6" CS
Caliper Serial Number	763893	Calibration Due Date (as applicable)	N/A

Rad Con Technician	D. Sarge	Date	7/20/04	Time	1000

Survey Unit Inspector Approval	D. Sarge / D. Sarge	Date	1000

SECTION 3 - MEASUREMENT RESULTS

SMTA Grid Map & Measurement Results in Units of mm
(Insert Results in White Blocks Below)

1	7	13	19	25	31
2	8	14	20	26	32
3	9	15	21	27	33
4	10	16	22	28	34
5	11	17	23	29	35
6	12	18	24	30	36

Average Measurement - mm

Comments

See below

Additional Measurements Required

Due to surface matrix, depth measurements were obtained using the Mitotoyo Caliper without the 36-grid template. Ten measurements were obtained, spaced throughout survey surface. Depth results range from 1.2 mm to 3.2 mm with an average of 1.8 mm.

GATE IS CONSTRUCTED OF STEEL.
CONFIGURATED IN 5 ROWS OF
7 COLUMNS OF CELLS MATRIX

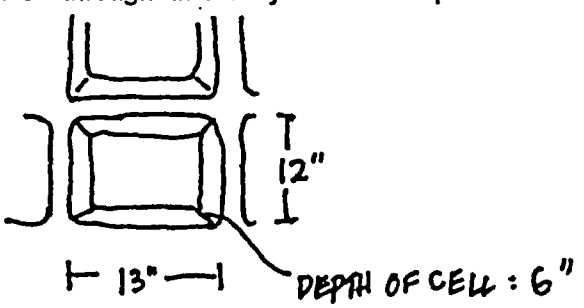

ATTACHMENT 9.8

SECTION 1 - DESCRIPTION

SMTA Number	SMTA-SS-25-2	Survey Unit Number	SS25
SMTA Location	SSGS Transition Area from Discharge Tunnel to the Spray Pond Pump Pit (East Facing Wall)		
Survey Unit Inspector	D. Sarge	Date	7/19/04
Time	1600		

SECTION 2 - CALIPER INFORMATION & PERSONNEL INVOLVED

Caliper Manufacturer	Mitotoyo	Caliper Model Number	CD-6" CS
Caliper Serial Number	763893	Calibration Due Date (as applicable)	N/A
Rad Con Technician	D. Sarge	Date	7/19/04
Time	1600		
Survey Unit Inspector Approval	D. Sarge / [signature]	Date	1600

SECTION 3 - MEASUREMENT RESULTS

SMTA Grid Map & Measurement Results in Units of mm
(Insert Results in White Blocks Below)

1	7	13	19	25	31
2	8	14	20	26	32
3	9	15	21	27	33
4	10	16	22	28	34
5	11	17	23	29	35
6	12	18	24	30	36

Average Measurement - mm

Comments

See below

Additional Measurements Required

Due to difficulty of template adherence to surface, depth measurements were obtained using the Mitotoyo Caliper and a detector template to simulate actual measurement distance. Ten measurements were obtained, spaced throughout survey surface. Depth results range from 14 mm to 27 mm with an average of 22 mm.

SECTION 1 - DESCRIPTION

SMTA Number	SMTA-SS-25-4	Survey Unit Number	SS25
SMTA Location	SSGS Transition Area from Discharge Tunnel to the Spray Pond Pump Pit (Floor Area – Under Ceiling)		
Survey Unit Inspector	D. Sarge	Date	7/20/04
Time	1000		

SECTION 2 - CALIPER INFORMATION & PERSONNEL INVOLVED

Caliper Manufacturer	Mitotoyo	Caliper Model Number	CD-6" CS
Caliper Serial Number	763893	Calibration Due Date (as applicable)	N/A
Rad Con Technician	D. Sarge	Date	7/20/04
Time	1000		
Survey Unit Inspector Approval	D. Sarge / [signature]	Date	1000

SECTION 3 - MEASUREMENT RESULTS

SMTA Grid Map & Measurement Results in Units of mm
(Insert Results in White Blocks Below)

1	7	13	19	25	31
2	8	14	20	26	32
3	9	15	21	27	33
4	10	16	22	28	34
5	11	17	23	29	35
6	12	18	24	30	36

Average Measurement - mm

Comments

See below

Additional Measurements Required

Due to surface moisture, depth measurements were obtained using the Mitotoyo Caliper. Ten measurements were obtained, spaced throughout survey surface. Depth results range from 12 mm to 75 mm with an average of 40 mm.