Appendix B

SSGS Trench and Sump Survey Design

ORIGINAL

FirstEnergy

SNEC CALCULATION COVER SHEET

CALCULATION DESCRIPTION

Calculation Number	Revision Number	Effective Date	Page Number
E900-03-025	0	10/8/03	1 of 76

Subject

SSGS Area Trench & Sump Survey Design

Question 1 - Is this calculation defined as "In QA Scope"? Refer to definition 3.5. Yes ☒ No ☐

Question 2 - Is this calculation defined as a "Design Calculation"? Refer to definitions 3.2 and 3.3. Yes ☒ No ☐

Question 3 - Does the calculation have the potential to affect an SSC as described in the USAR? Yes ☐ No ☒

NOTES: If a "Yes" answer is obtained for Question 1, the calculation must meet the requirements of the SNEC Facility Decommissioning Quality Assurance Plan. If a "Yes" answer is obtained for Question 2, the Calculation Originator's immediate supervisor should not review the calculation as the Technical Reviewer. If a "YES" answer is obtained for Question 3, SNEC Management approval is required to implement the calculation. Calculations that do not have the potential to affect SSC's may be implemented by the TR.

DESCRIPTION OF REVISION

APPROVAL SIGNATURES

Calculation Originator	B. Brosey/ B. Brosey	Date	10-7-03
Technical Reviewer	P. Donnachie/ P. Donnachie	Date	10-7-03
Additional Review	For: A. Paynter/ W. Stover /	Date	10/7/03
Additional Review		Date	
SNEC Management Approval		Date	

1.0 PURPOSE

1.1 The purpose of this calculation is to develop a survey design for a section of the SSGS 790' El floor area called the "Trench" and four (4) sumps (the NE, SE, NW & SW sumps). These are ***Class 1 survey areas*** that collectively represent one (1) survey unit (**SS14-6**). All of these areas are shown on **Attachment 1-1** and **1-2**.

1.2 The total area for this survey unit is ***~100 square meters***. The exact amount of area represented by these locations is roughly estimated since the Trench area is an irregular surface that was cut into the existing floor of the SSGS footprint (at the ~790' El) to remove contaminated system piping. This survey unit is divided into the following 13 sections:

1.2.1 Section 1 – **Attachment 2-1** and **2-2** (photo)

1.2.2 Section 2 – **Attachment 2-3** and **2-4** (photo)

1.2.3 Section 3 – **Attachment 2-5** and **2-6** (photo of Section 3 & 4)

1.2.4 Section 4 – **Attachment 2-7** and **2-8** (for additional photo see **Attachment 2-6**)

1.2.5 Section 5 – **Attachment 2-9** and **2-10** (photo)

1.2.6 Section 6 – **Attachment 2-11** and **2-12** (photo)

1.2.7 Section 7 – **Attachment 2-13** to **2-16** (photos on **Attachments 14** to **16**)

1.2.8 Section 8 – **Attachment 2-17** and **2-18** (for additional photo see **Attachment 2-16**)

1.2.9 Section 9 – **Attachment 2-19** (see photo **Attachment 2-16**)

1.2.10 SE Sump – **Attachment 2-20** and **2-21** (photo)

1.2.11 NE Sump – **Attachment 2-22** (see photo **Attachment 2-8**)

1.2.12 SW Sump – **Attachment 2-23** (see photo **Attachment 2-14**)

1.2.13 NW Sump – **Attachment 2-24** and **2-25** (photo)

NOTE: Photos are "for information only" and do not represent FSS pre-survey conditions.

2.0 SUMMARY OF RESULTS

The following information should be used to develop a survey request for this survey design:

2.1 *Phase 1 - GFPC Measurements*

2.1.1 The number of static measurement points indicated for this survey unit by the Compass computer program is listed below. VSP adds additional points in cases where the diagram is odd shaped (edge effect) and/or because of the location of the random starting point. Additionally, the bounded area dictates survey point spacing which may also influence the number of survey points located on diagrams. For this design, the minimum number of static survey points (GFPC) for this survey unit is ***8*** (see **Attachment 3-1** through **3-4**). Additional points have been added to provide coverage over the entire survey unit.

2.1.2 The starting point (0, 0) for physically locating each static survey point is shown on the attachments (see **Attachment 4-1** to **4-13**). Check the indicated attachment for the correct location for starting points when laying out these locations. Contact the cognizant SR coordinator if there are any questions regarding these starting points.

2.1.3 The scan speed is set at ***2.2 cm/sec***. ***Scan coverage is set at 100%*** for this ***Class 1*** area using a GFPC.

2.1.4 This survey design requires the detector be in ***contact with the surface*** during all measurement phases except in areas where this is not physically possible (gouges, cavities, etc.).

2.1.5 For purposes of this design, the 43-68 probe is assumed to be ***2 ½"*** from the surface to be surveyed. Areas where the detector cannot be at or closer than this distance should be identified (using **Reference 3.9**) and clearly marked before surveying these areas. Additional locations (discovered during survey work), that cannot be surveyed adequately should be marked in a like fashion. These marked areas will be scanned using a NaI detector as described in Section 2.2 of this calculation.

2.1.6 The DCGLw is ***13,000 dpm/100 cm²*** or ***983 cpm above background*** for a static measurement (from Compass output).

2.1.7 The action level during first phase scanning is ***500 cpm above background***. If this level is reached, the surveyor should stop and perform ***a count of at least 1/2 minute*** duration to identify the actual count rate from the elevated location.

NOTE: Static and Scan MDC values are listed in the tables in Section 4.14 and 4.15.

2.1.8 ***Areas greater than the DCGLw (983 ncpm) must be identified, documented, marked, and bounded to include an area estimate***.

2.1.9 If remediation actions are taken as a result of this survey, this survey design must be revised or re-written entirely.

2.1.10 When an obstruction is encountered during the static measurement phase that will not allow placement of a static survey point, contact the cognizant SR coordinator for permission to delete the survey point. Document the reason for the deletion. Static measurement locations are confined to areas within the Trench and sumps that SRA did not scan.

2.1.11 A smear survey shall be performed at static measurement point locations. These smears shall be obtained after static measurements are acquired. Smears shall be assayed for beta/gamma and alpha contamination. Report results in net counts per minute. A composite gamma scan shall also be performed and reported.

2.1.12 A gas flow proportional counter (GFPC) shall be used in the beta detection mode for this first phase survey work (Ludlum 2350-1 with a 43-68B probe).

2.1.13 ***Other instruments of the type specified in 2.1.12 above may be used during the FSS but they must demonstrate an efficiency at or above the value listed in Attachment 5-1 (23.9%).***

2.2 *Phase 2 - NaI Measurements*

2.2.1 Some areas have been marked for scanning using a 2" by 2" NaI detector. Additionally, other areas may be identified during the phase 1 survey process that are also not generally suitable for GFPC survey work. ***All of these areas should be clearly identified, bounded and documented***.

2.2.2 For open areas, the scan speed is set at ***10 cm/second*** when scanning with a ***2" by 2" NaI detector***, and ***moving side to side in a serpentine pattern at a distance of 2" from the survey area***. The stand-off distance (2") should be monitored frequently during the scanning process since it is generally harder to maintain a set spacing over rough surfaces.

2.2.3 For areas ***where NaI scanning*** (described in Section 2.2.2) ***is not appropriate***, ***hold the detector stationary near the center of the suspect region***, ***within 2" from the surface*** and determine the count rate. If the area is larger than 12 in^2, take several measurements in/over the area. Record the approximate dimensions of the area and the position of the detector with respect to where the measurement(s) were taken.

2.2.4 When access to an area does not allow the detector to be less than or equal to 2" from the surface, perform a measurement at the closest location and record the result, the actual distance from the face of the detector and the area size.

2.2.5 If a count rate of ***300 gross cpm*** is identified, the location should be clearly marked for sampling.

2.3 ***Phase 3 - Sampling***

2.3.1 Sample any location that is above the action level cited is Section 2.1 (phase 1) or Section 2.2 (phase 2) previously discussed. The ***action level for phase 1*** is ***500 (GFPC) ncpm*** and the ***action level for phase 2*** is ***300 gross cpm (NaI)***. A 4" long core bore sample is preferred so that the depth of penetration can be identified. However, when a core bore cannot be taken because of the quality of the concrete, or because of limited access in an area, sampling should ***remove the first 1"*** of concrete and yield a ***volume of at least 200 cc*** to ensure an adequate counting MDA for Cs-137.

3.0 REFERENCES

3.1 Compass Computer Program, Version 1.0.0, Oak Ridge Institute for Science and Education.

3.2 Visual Sample Plan, Version 2.0 (or greater), Copyright 2002, Battelle Memorial Institute.

3.3 SNEC Procedure E900-IMP-4500.59, "Final Site Survey Planning and DQA".

3.4 GPU Nuclear, SNEC Facility, SSGS Footprint, Drawing, SNECRM-041_S1_RO.

3.5 SNEC Calculation No. E900-03-019, Shonka SSGS Footprint & CV Steam Pipe Tunnel (SSGS Side) FSS Survey Design.

3.6 Plan SNEC Facility License Termination Plan.

3.7 SNEC Calculation No. E900-03-012, Effective DCGL Worksheet Verification.

3.8 ISO 7503-1, Evaluation of Surface Contamination, Part 1: Beta-emitters (maximum beta energy greater than 0.15 MeV) and alpha-emitters, 1988.

3.9 SNEC Calculation No. 6900-02-028, GFPC Instrument Efficiency Loss Study.

3.10 SNEC procedure E900-IMP-4520.06, "Survey Unit Inspection in Support of FSS Design".

3.11 MicroShield, Computer Radiation Shielding Code, Version 5.05-00121, Grove Engineering.

3.12 SNEC procedure E900-IMP-4520.04, "Survey Methodology to Support SNEC License Termination".

3.13 NUREG-1575, "Multi-Agency Radiation Survey and Site Investigation Manual", August, 2000.

3.14 Microsoft Excel 97, Microsoft Corporation Inc., SR-2, 1985-1997.

4.0 ASSUMPTIONS AND BASIC DATA

4.1 A gas flow proportional counter (GFPC) will be used in the beta detection mode as the beta survey instrument (a Ludlum 2350-1 with a 43-68B probe).

4.2 The Compass computer program is used to develop the number of fixed point measurement locations that are to be taken within this Class 1 survey unit (**Reference 3.1**)

4.3 The WRS statistical testing criteria will be applicable for this survey design (beta measurements only).

4.4 The number of static measurement points chosen by Compass are located on diagrams by the Visual Sample Plan (VSP) computer code (**Reference 3.2**). This survey unit is a very rough area, and assembled diagrams of this survey unit are at best, approximations of the actual areas identified herein.

4.5 VSP is used to plot random and random start systematically spaced fixed point survey locations. The coordinates of the survey points are provided for each diagram. Because of edge effects and a desire to error on the conservative side, additional measurement points have been forced either by increasing the MARSSIM overage above the required 20%, or by extending the systematically spaced static points over the entire length of the survey unit.

4.6 **Reference 3.3** was used as guidance during the survey design development phase.

4.7 The drawing used to determine the physical extent of these areas is listed as **Reference 3.4**.

4.8 Remediation History

Remediation of the SSGS Footprint began with gross decontamination of the sump areas and removal of contaminated hardware and piping systems. Surface cleaning was performed by removing a thickness of the concrete surface in affected areas. Core bores were then taken to determine the depth of the contamination and to estimate remediation effectiveness. Remaining piping systems were sampled and gamma scanned to determine the existing concentrations. Obstructions were cut off and concrete surfaces were scraped free of paint and scale. Remediation efforts included combinations of the following cleaning techniques:

- scabbling
- surface grinding and use of an oxy/acetylene torch to remove metal obstructions
- surface scraping
- water flush

4.9 This survey design uses an effective gross activity DCGLw value developed for and reported in **Reference 3-5**, from the analysis of sediment and surface scrapings taken within pipe sections at various locations within the SSGS Footprint (see **Attachment 6-1** to **6-3**).

The SNEC License Termination Plan (LTP) (**Reference 3.6**) allows the use of a 2 sigma plus the mean treatment when combining multiple sample results to form an effective concentration mix. This approach was used to determine the effective DCGLw values for the SSGS Footprint.

Five (5) radionuclides were not considered since there was no significant values in any sample result for these nuclides (Pu-241, C-14, Ni-63, H-3 and Eu-152). All samples were decayed to 7/15/03 before they were combined as a single representative concentration (**Attachment 6-1**).

The decayed "2 sigma plus the mean" sample result were used as input to the spreadsheet titled "Effective DCGL Calculator for Cs-137" (**Reference 3-7**), to determine the effective DCGL value for the SSGS Footprint. This spreadsheet calculates a gross activity DCGLw value of ~17,498 dpm/100 cm^2 (see **Attachment 6-2**). A further correction to the gross activity DCGLw is necessary to address de-listed radionuclides and an administrative limit set by the SNEC facility. The SNEC facility has instituted an administrative limit of 75% of the allowable dose for the area. The de-listed radionuclide dose is accounted for within the 75% administrative limit. The 75% administrative limit is applied as follows: 0.75 x 17,461 dpm/100 cm^2 (Cs-137) = 13,095 dpm/100 cm^2. This value is rounded to ***13,000 dpm/100 cm^2 (Cs-137)***.

4.10 Cs-137 accounts for the majority of the total activity in the modified sample result.

- The SNEC modified sample is greater than 99% Cs-137.

Cs-137 provides the only reasonably detectable radionuclide in this mix. Cs-137's detection efficiency has been checked by SNEC personnel using ISO standard 7503-1 methodology (**Reference 3.8**). The SNEC facility uses only the lowest reported efficiency for any of the instruments available for the survey work as input to the survey design process. **Attachment 5-1** indicates an ***instrument efficiency of 0.478***. The ***ISO value of 0.5*** is used as the source efficiency. The instrument S/N used to determine this value is 126218 and the probe S/N is 95080.

Other instruments may be used during the FSS but they must demonstrate an efficiency at or above 0.478 for the instrument efficiency.

4.11 The current version of Compass (version 1.0) does not perform correctly when using the gross activity option for multiple radionuclides. Therefore, an alternative will be implemented for this survey design. The alternative approach involves several small changes that will not negatively impact the survey design process. These changes are:

4.11.1 For this survey design, the effective efficiency will be calculated using the following:

- ε_i = 0.478 x [any surface condition correction factor that impacts efficiency e.g., the impact from an increase in the average distance between the detector and source caused by a rough surface (uneven source area)].

- ε_s = [0.5 (ISO for Cs-137 energy betas)] x [the fraction of Cs-137 in the source area, which would be 1 for the Cs-137 calibration source or 0.996 for Cs-137 in the SSGS footprint]

4.11.2 A radionuclide will be created in the library of Compass called "Gross Activity". This radionuclide will have the same nuclear parameters as Cs-137 (half-life, decay time, etc.). The effect will be (when called up) that "Gross Activity" will replace Cs-137 on the print-out from the Compass program (administrative impact only).

4.11.3 Only "Gross Activity" will be used in the Compass program for this survey design. However, the Area Factors (AF) input to Compass will be for Co-60, which is the more conservative of all SNEC AF values for radionuclides present in the mix. Note that Co-60 AF values are very close to Cs-137 AF values so there is little additional impact from using a Co-60 area factor.

4.11.4 A detector stand-off distance of 2 ½" is used to compensate for rough surfaces in the Trench area. This factor corrects the overall efficiency by a factor of 0.25 (see **Attachment 7-1** and **Reference 3.9**)

4.12 The detectors physical probe area is 126 cm^2, and the instrument is calibrated to the same source area for Cs-137. The gross activity DCGLw is taken to be 13,000 dpm/100 cm^2 x (126 cm^2 physical probe area/100 cm^2) = 16,380 x (0.996 disintegration of Cs-137/ disintegration in mix) x ε_i (0.478) x ε_s (0.5) x 0.25 (distance factor) which yields ~975 net cpm above background (Compass calculates 983 ncpm as the gross beta DCGLw). The 0.06 count per disintegration counting efficiency considers only the Cs-137 contaminant present in the sample material matrix, and is calculated by: ε_i (0.478) x ε_s (0.5) x 0.996 disintegration of Cs-137/disintegration in mix x 0.25 (efficiency loss factor due to distance from surface) = 0.06 cts/gamma.

4.13 Surface defects (gouges, cracks, etc.), are present in this survey unit, but a portion of the surface area in this survey unit is relatively smooth. Thus the average concentration of the source term will be overestimated by using a distance correction factor of 0.25 for the entire survey unit.

4.14 Inaccessible areas, i.e., areas where a 43-68 beta probe can not be used, will be gamma scanned using a 2" x 2" NaI detector. The detector will be set-up and calibrated using a Cs-137 window setting equivalent to that described in **Attachment 8-1**.

4.15 MicroShield models of concrete slabs containing Cs-137 were developed for this survey design (see **Attachment 9-1** to **9-4**). Two models were used; 1) a 3" thick slab of concrete 18" long by 12", wide with a density of 2/3 that of concrete to simulate an extremely rough surface (many pits and valleys), and 2) a 1" thick slab of concrete 18" long and 6" wide to simulate a narrow but relatively smooth surface such as the bottom of the Trench channel. The concentration used was 1 pCi/g Cs-137 and the full density of concrete is assumed to be 2.35 g/cc. Then the concentration of Cs-137 in the first model is 2.35g/cc x 2/3 x 1 pCi/g or 1.567E-06 uCi/cc of Cs-137 for the rough model, and 2.35E-06 uCi/cc for the smaller slab model. A 1" thickness was modeled for the smaller slab since volumetric contamination in concrete in the SSGS Footprint area has not been seen much below 1" in concrete core bore samples taken from this structure. From **Attachment 10-1** to **10-3**, the calculated MDCscan for these two models is 2 and 4.8 pCi/g Cs-137 respectively.

4.16 The results of the MicroShield modeling indicate that an exposure rate of approximately 6.611E-05 mR/h is obtained at a distance of 3" (2" inches from the face of the detector),

from the surface of the smaller slab model, and 1.601E-04 mR/h is seen 3 inches from the surface of the larger or rough surface model. Exposure rate is measured to the center of the detector and therefore the air gap between the surface of both models is taken to be 2".

4.17 The volumetric DCGLw for concrete is assumed the same as soil for the site and from **Reference 3.5** the Cs-137 volumetric DCGLw is calculated to be 4.93 pCi/g (see **Attachment 6-3**). This is the administrative limit for this area. The volumetric limits can be compared directly to the NaI scanning results. Scanning using the prescribe criteria will detect values at or above the DCGLw of 4.93 pCi/g Cs-137. When an elevated scan result is observed while scanning with the NaI, a sample should be taken. The sample can be a grab sample or a core bore sample. The sample should be collected to a minimum depth of 1" for a grab sample or 4" for a core bore sample. Core bore samples are preferred when ever possible.

4.18 This survey unit is below grade and is surrounded by concrete. Since below grade ambient background radiation levels (shielded measurements) are typically lower than grade level ambient background levels, an adjustment to the GFPC background values is made. To accomplish this, the shielded measurement data mean from the SSGS Footprint is subtracted from the shielded grade level mean background value (see **Attachment 11-1** and **11-2**). The difference is assumed to be the result of differences in elevation between the two locations. This difference is then subtracted from the open window background results as an estimate of the real open window background count rate in the SSGS Footprint. These corrected open window background values have been used as input to the Compass program.

4.19 No adjustment of NaI background values are made. The average concrete background value is used to determine the MDCscan values (see **Attachment 12-1** for background **NaI** values).

4.20 The static beta-gamma MDC calculation result for this survey unit is shown in **Attachment 3-2**. The results are summarized below for a 1 minute count time and show an adequate static MDC for this survey work.

Survey Units	Estimated Background (cts/min)	MDC_{STATIC} (dpm/100 cm^2)
SS14-1	298 (corrected bkgnd data)	Compass = 1,101

4.21 The scan MDC calculation is determined based on a 2.2 cm/sec scan rate, a 1.38 index of sensitivity (95% correct detection probability and 60% false positive), 0.06 counts/disintegration and a 126 cm^2 probe area. Compass calculates a value of 2,175 dpm/100 cm^2, and does not use the 126 cm^2 probe correction factor in the equation.

The scan MDC is less than the gross activity DCGLw for the survey unit. Therefore, there is no need to add additional survey points to this survey design for purposes of meeting hot spot design criteria (see **Attachment 3-4**).

Survey Unit	Estimated Background (cts/min)	MDC_{SCAN} (dpm/100 cm^2)
SS14-1	298 (corrected bkgnd data)	Compass = 2,175

4.22 The survey units described in this survey design were inspected after remediation efforts were completed. A copy of portions of the SNEC facility post-remediation inspection report (**Reference 3.10**), is included as **Attachment 13-1** to **13-4**.

4.23 No special area characteristics including any additional residual radioactivity (not previously noted during characterization) have been identified in this survey unit.

4.24 The decision error for this survey design is 0.05 for the α value and 0.1 for the β value.

4.25 Special measurements including gamma-ray spectroscopy are not included in this survey design. Gross gamma scans are conducted along with gross beta scans.

4.26 Sampling will be performed IAW this survey design if elevated areas are located during the scanning process (see Section 2.3).

4.27 The applicable SNEC site radionuclides and their associated DCGLw values are listed on **Exhibit 1** of this calculation.

4.28 The survey design checklist is listed in **Exhibit 2**.

4.29 The Area Factors for this survey unit is shown below (Co-60). These values as applicable, were input to the Compass computer program (see **Attachment x-1**). The lower limit area factor for areas less than 1 square meter is the value 10.1. Area factors for values between the values listed in the following table, are interpolated from the data by Compass.

AREA (m^2)	AREA FACTOR
1	10.1
4	3.4
9	2
16	1.5
25	1.2
36	1

5.0 CALCULATIONS

5.1 All major calculations are performed internal to applicable computer codes or within an Excel spreadsheet.

6.0 APPENDICES

6.1 **Attachment 1-1** and **1-2**, are diagrams of the SSGS Footprint that contain this survey unit (SS14-6).

6.2 **Attachment 2-1** to **2-25**, are base diagrams of the survey unit broken into sections. Additionally, photos are included to aid the reader in identifying each survey unit section.

6.3 **Attachment 3-1** to **3-4**, is the Compass output as a result of the survey design input parameters for this survey unit.

6.4 **Attachment 4-1** and **4-13**, is the VSP plotted static measurement locations for each section of this survey unit. Dimensions are included.

6.5 **Attachment 5-1**, is the SNEC site calibration sheet for the GFPC radiation measurement instrument with the lowest Cs-137 detection efficiency.

6.6 **Attachment 6-1**, is the SNEC sample results for twenty (20) samples used to develop a representative mix for this survey unit.

6.7 **Attachment 6-2**, the "Effective DCGL Calculator" spreadsheet result for the sample mix for surface activity.

6.8 **Attachment 6-3**, the "Effective DCGL Calculator" spreadsheet result for the sample mix for volumetric activity.

6.9 **Attachment 7-1**, is the graph of GFPC response Vs the distance from a calibration source, showing fractional counting efficiency loss.

6.10 **Attachment 8-2**, is an NaI detector calibration sheet for a Cs-137 windowed instrument.

6.11 **Attachment 9-1** to **9-4**, are MicroShield output results for two (2) concrete slab models used to determine the MDCscan values for this instrument.

6.12 **Attachment 10-1** to **10-3**, is the calculation sheets for the NaI detector using the calibration factor shown in **Attachment 8-2**.

6.13 **Attachment 11-1**, is background values for the GFPC detection system taken at the mouth of the Intake Tunnel (non-impacted area).

6.14 **Attachment 11-2**, is measurements taken in the SSGS Footprint as a measurement variability assessment.

6.15 **Attachment 12-1**, is background measurements for the NaI instrument taken at the mouth of the mouth of the Intake Tunnel.

6.16 **Attachment 13-1 to 13-4**, is the survey units inspection report.

Exhibit 1

SNEC Facility DCGL Values [a]

Radionuclide	25 mrem/y Limit Surface Area (dpm/100cm^2)	25 mrem/y Limit (All Pathways) Open Land Areas (Surface & Subsurface) (pCi/g)	4 mrem/y Goal (Drinking Water) Open Land Areas [b] (Surface & Subsurface) (pCi/g)
Am-241	2.7E+01	9.9	2.3
C-14	3.7E+06	2	5.4
Co-60	7.1E+03	3.5	67
Cs-137	2.8E+04	6.6	397
Eu-152	1.3E+04	10.1	1440
H-3	1.2E+08	132	31.1
Ni-63	1.8E+06	747	1.9E+04
Pu-238	3.0E+01	1.8	0.41
Pu-239	2.8E+01	1.6	0.37
Pu-241	8.8E+02	86	19.8
Sr-90	8.7E+03	1.2	0.61

NOTES:

(a) While drinking water DCGLs will be used by SNEC to meet the drinking water 4 mrem/y goal, only the DCGL values that constitute the 25 mrem/y regulatory limit will be controlled under this LTP and the NRC's approving license amendment.

(b) Listed values are from the subsurface model. These values are the most conservative values between the two models (i.e., surface & subsurface).

Exhibit 2
Survey Design Checklist

Calculation No.	Location Codes
E900-03-021	CV4-1, CV6-1 and CV5

ITEM	REVIEW FOCUS	Status (Circle One)	Reviewer Initials & Date
1	Has a survey design calculation number been assigned and is a survey design summary description provided?	Yes, N/A	JH 10/7/03
2	Are drawings/diagrams adequate for the subject area (drawings should have compass headings)?	Yes, N/A	
3	Are boundaries properly identified and is the survey area classification clearly indicated?	Yes, N/A	
4	Has the survey area(s) been properly divided into survey units IAW EXHIBIT 10	Yes, N/A	
5	Are physical characteristics of the area/location or system documented?	Yes, N/A	
6	Is a remediation effectiveness discussion included?	Yes, N/A	
7	Have characterization survey and/or sampling results been converted to units that are comparable to applicable DCGL values?	Yes, N/A	
8	Is survey and/or sampling data that was used for determining survey unit variance included?	Yes, N/A	
9	Is a description of the background reference areas (or materials) and their survey and/or sampling results included along with a justification for their selection?	Yes, N/A	
10	Are applicable survey and/or sampling data that was used to determine variability included?	Yes, N/A	
11	Will the condition of the survey area have an impact on the survey design, and has the probable impact been considered in the design?	Yes, N/A	
12	Has any special area characteristic including any additional residual radioactivity (not previously noted during characterization) been identified along with its impact on survey design?	Yes, N/A	
13	Are all necessary supporting calculations and/or site procedures referenced or included?	Yes, N/A	
14	Has an effective DCGLw been identified for the survey unit(s)?	Yes, N/A	
15	Was the appropriate $DCGL_{EMC}$ included in the survey design calculation?	Yes, N/A	
16	Has the statistical tests that will be used to evaluate the data been identified?	Yes, N/A	
17	Has an elevated measurement comparison been performed (Class 1 Area)?	Yes, N/A	
18	Has the decision error levels been identified and are the necessary justifications provided?	Yes, N/A	
19	Has scan instrumentation been identified along with the assigned scanning methodology?	Yes, N/A	
20	Has the scan rate been identified, and is the MDCscan adequate for the survey design?	Yes, N/A	
21	Are special measurements e.g., in-situ gamma-ray spectroscopy required under this design, and is the survey methodology, and evaluation methods described?	Yes, N/A	
22	Is survey instrumentation calibration data included and are detection sensitivities adequate?	Yes, N/A	
23	Have the assigned sample and/or measurement locations been clearly identified on a diagram or CAD drawing of the survey area(s) along with their coordinates?	Yes, N/A	
24	Are investigation levels and administrative limits adequate, and are any associated actions clearly indicated?	Yes, N/A	
25	For sample analysis, have the required MDA values been determined.?	Yes, N/A	
26	Has any special sampling methodology been identified other than provided in Reference 6.3?	Yes, N/A	JH 10/7/03

NOTE: a copy of this completed form or equivalent, shall be included within the survey design calculation.

E900-03-025

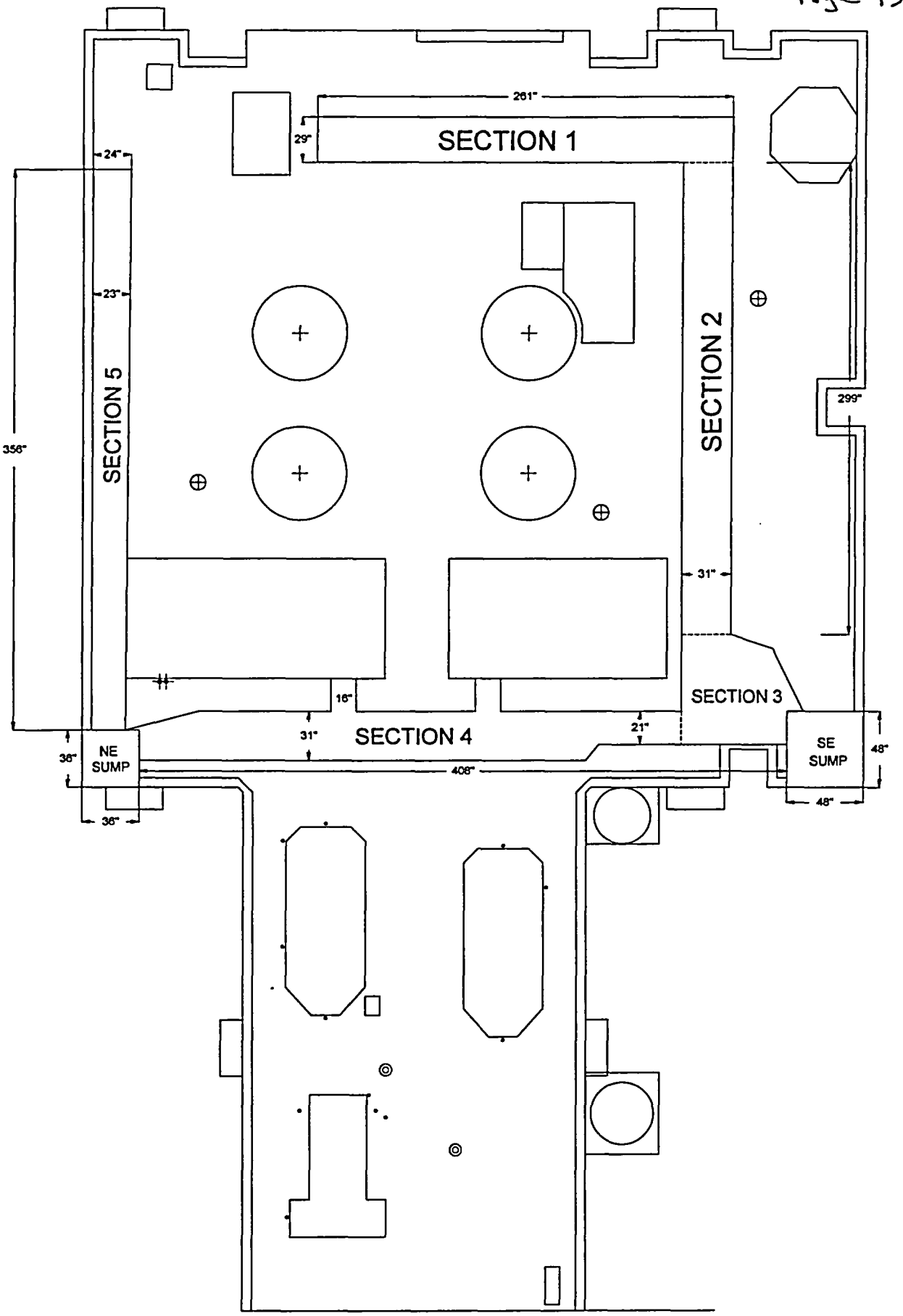

ATTACHMENT 1 - 1

PLAN EL. 790'

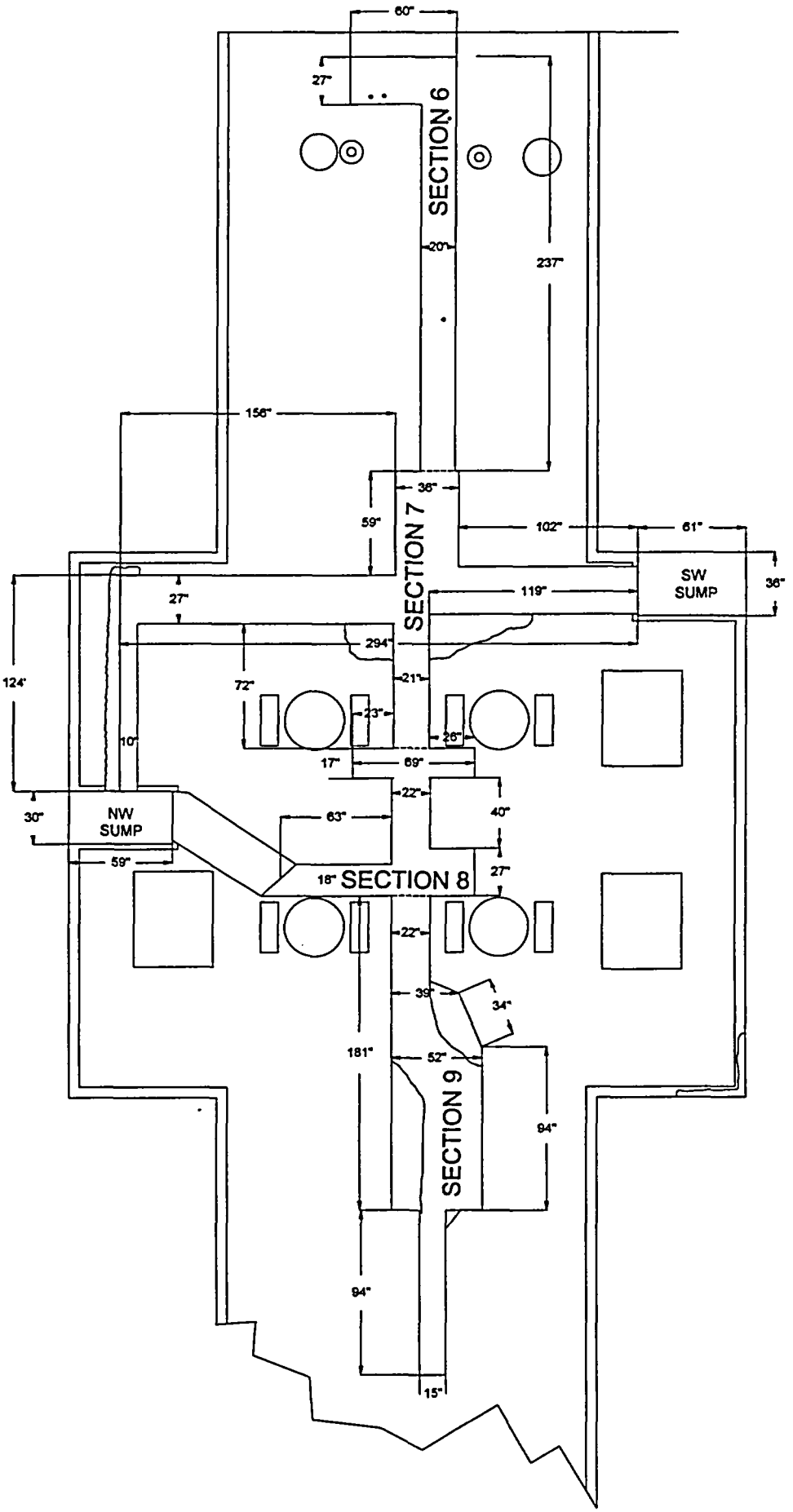

PLAN EL. 790'

ATTACHMENT 1 . 2

TRENCH - SECTION 1

Plan View ~ 16780 in sq

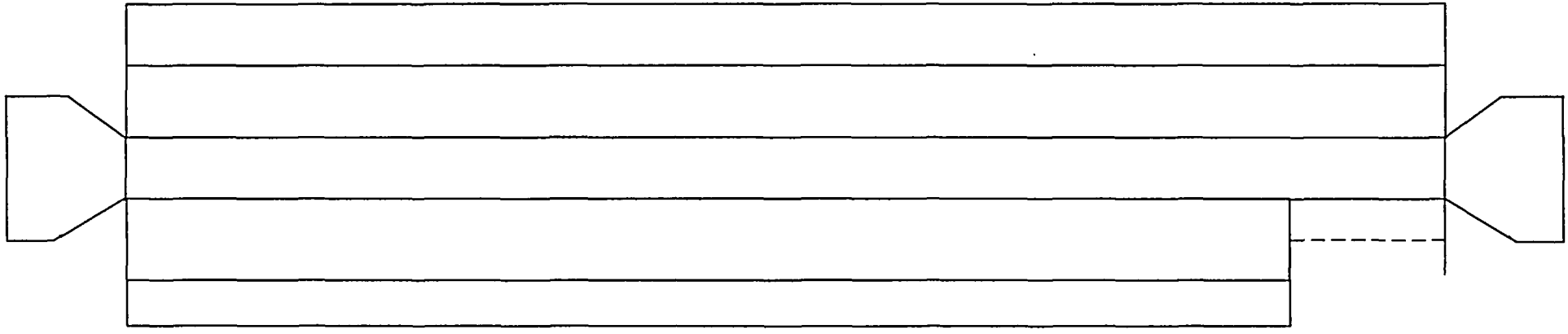

ATTACHMENT 2 - 1

Page 15 of 76
E90-03025

Page 16 of 76
E900-03-025

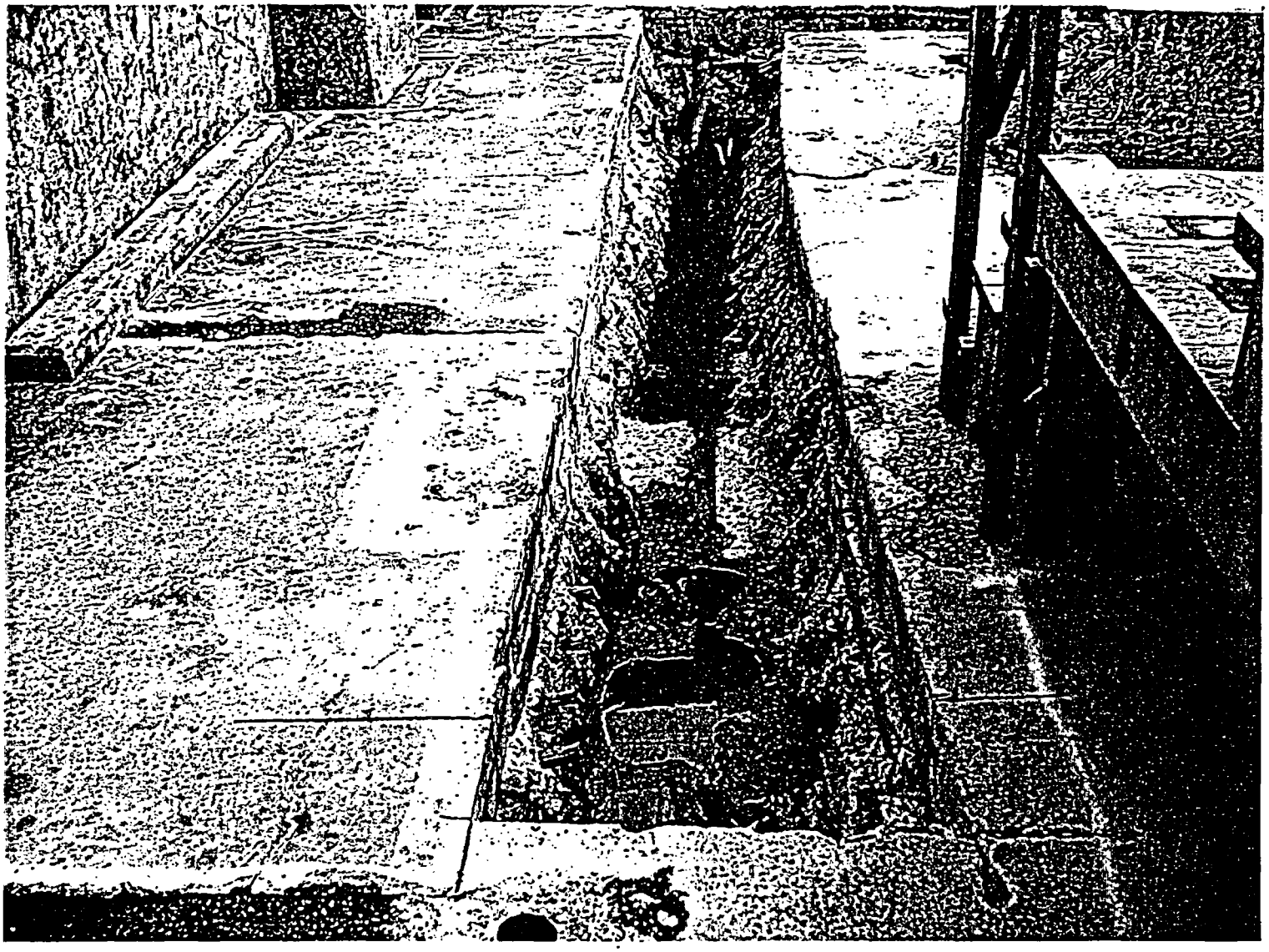

ATTACHMENT 2.2

SECTION 2

Plan View ~ 23692 in sq

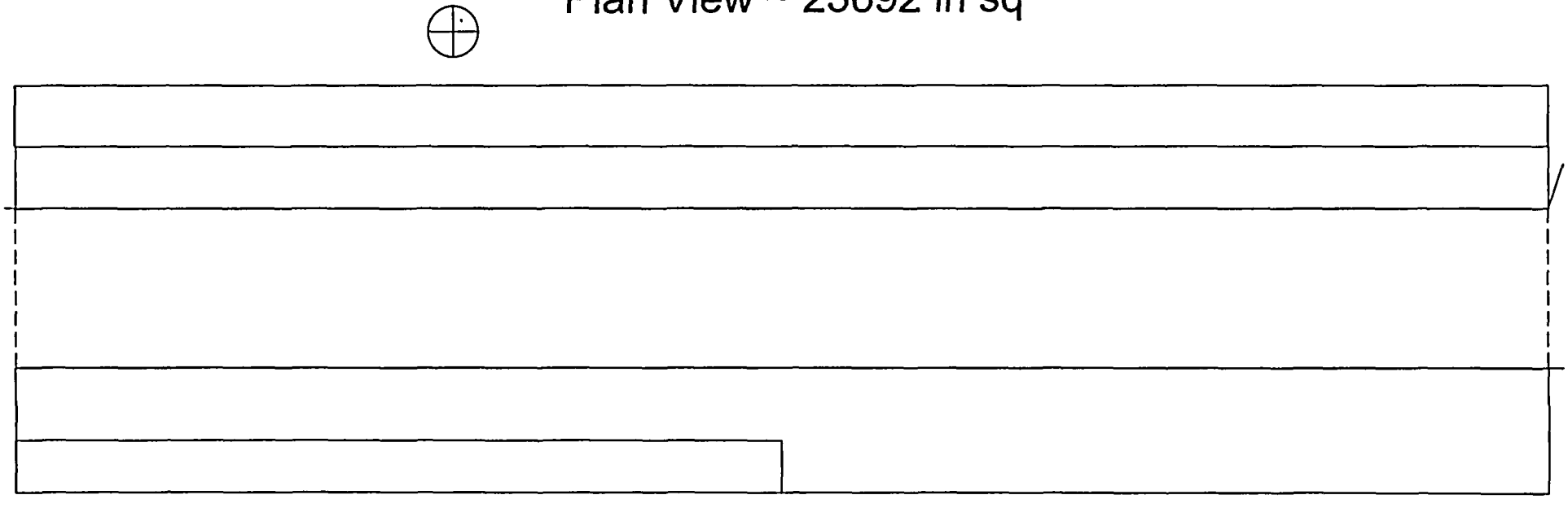

ATTACHMENT 2 . 3

Page 174 of 76
E900-03-025

Page 18 of 76
E900-03-025

ATTACHMENT 2-4

SECTION 3

Plan View ~ 9935 in sq

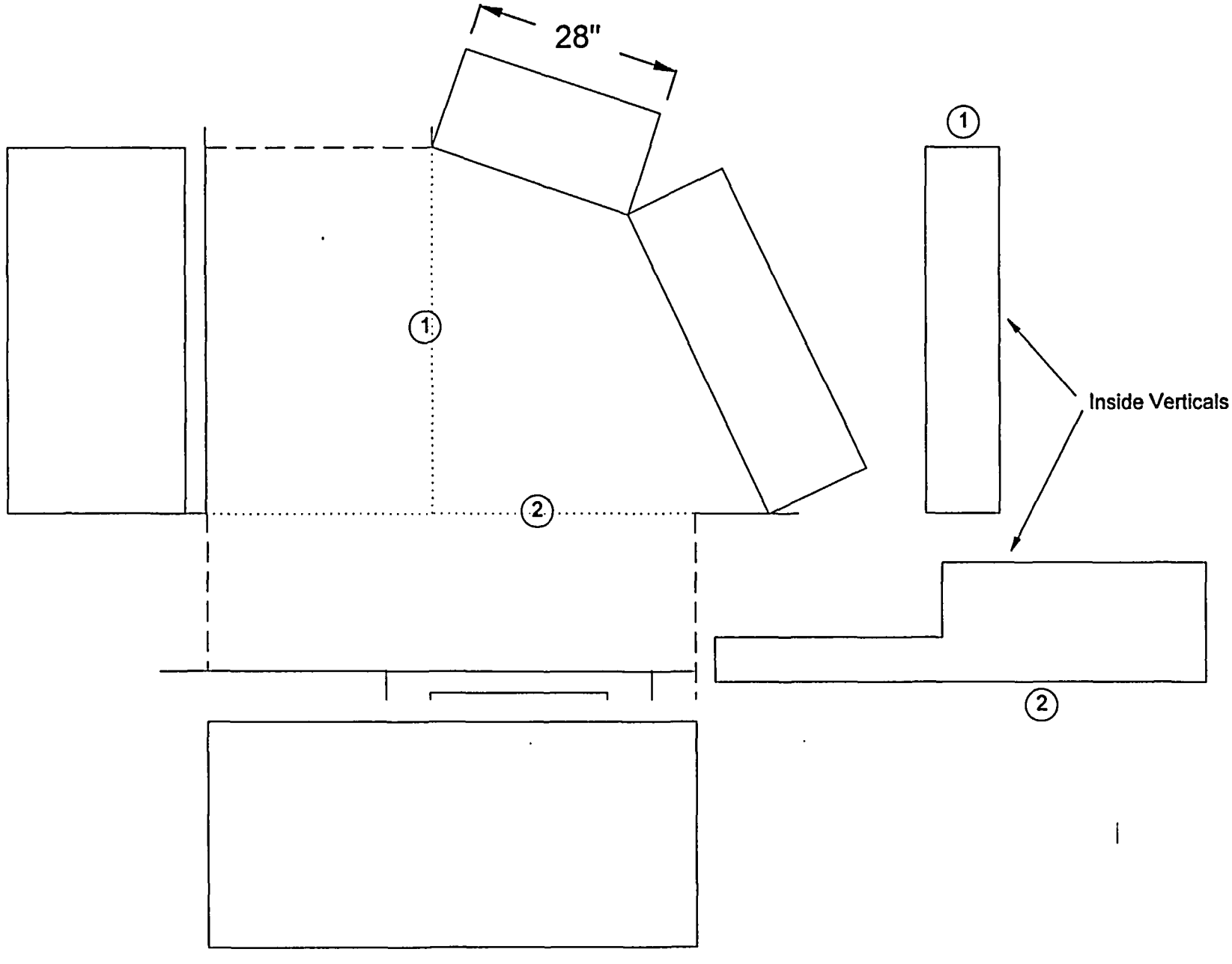

ATTACHMENT 2.5

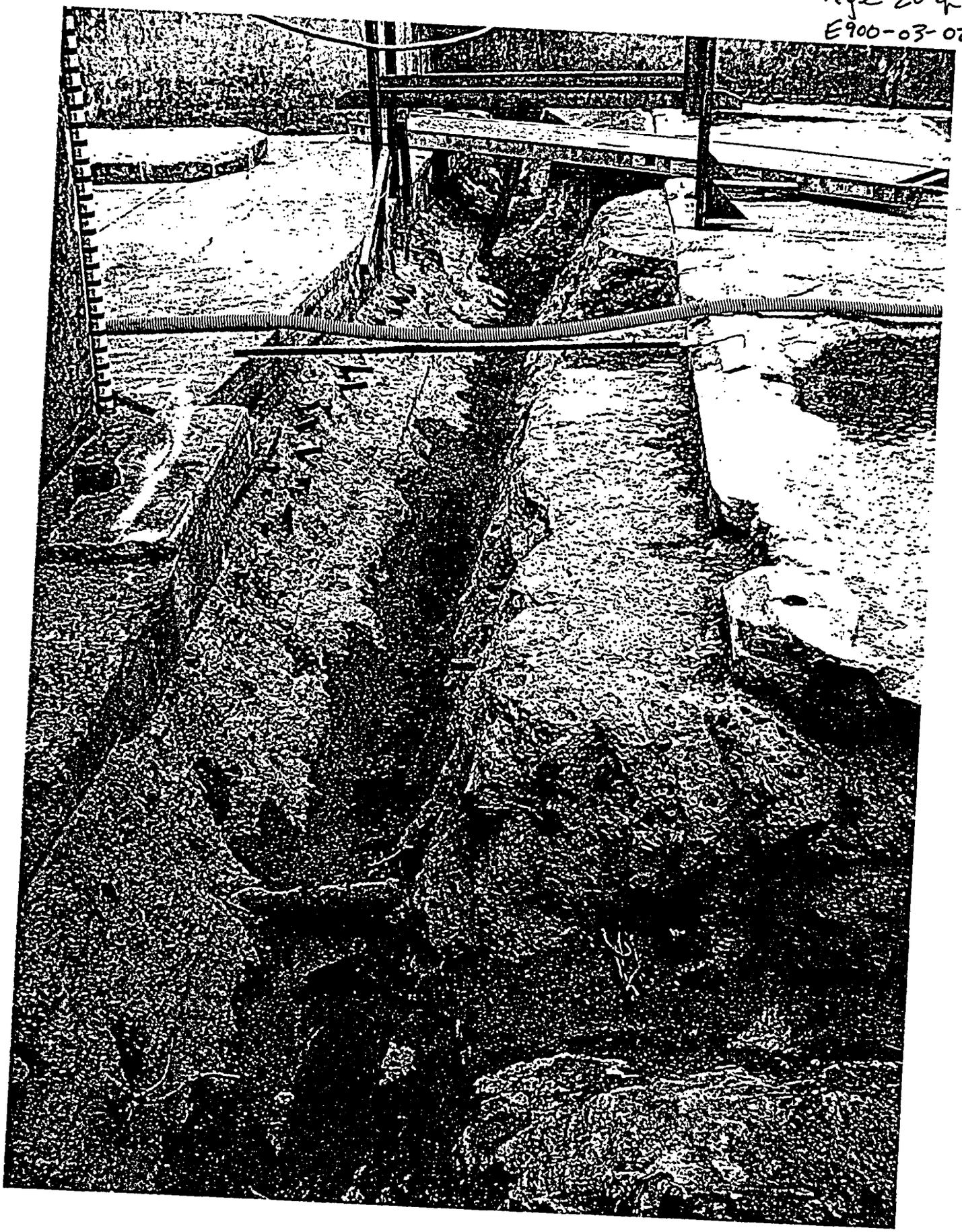

ATTACHMENT 2.6

SECTION 4

Plan View ~ 22447 in sq

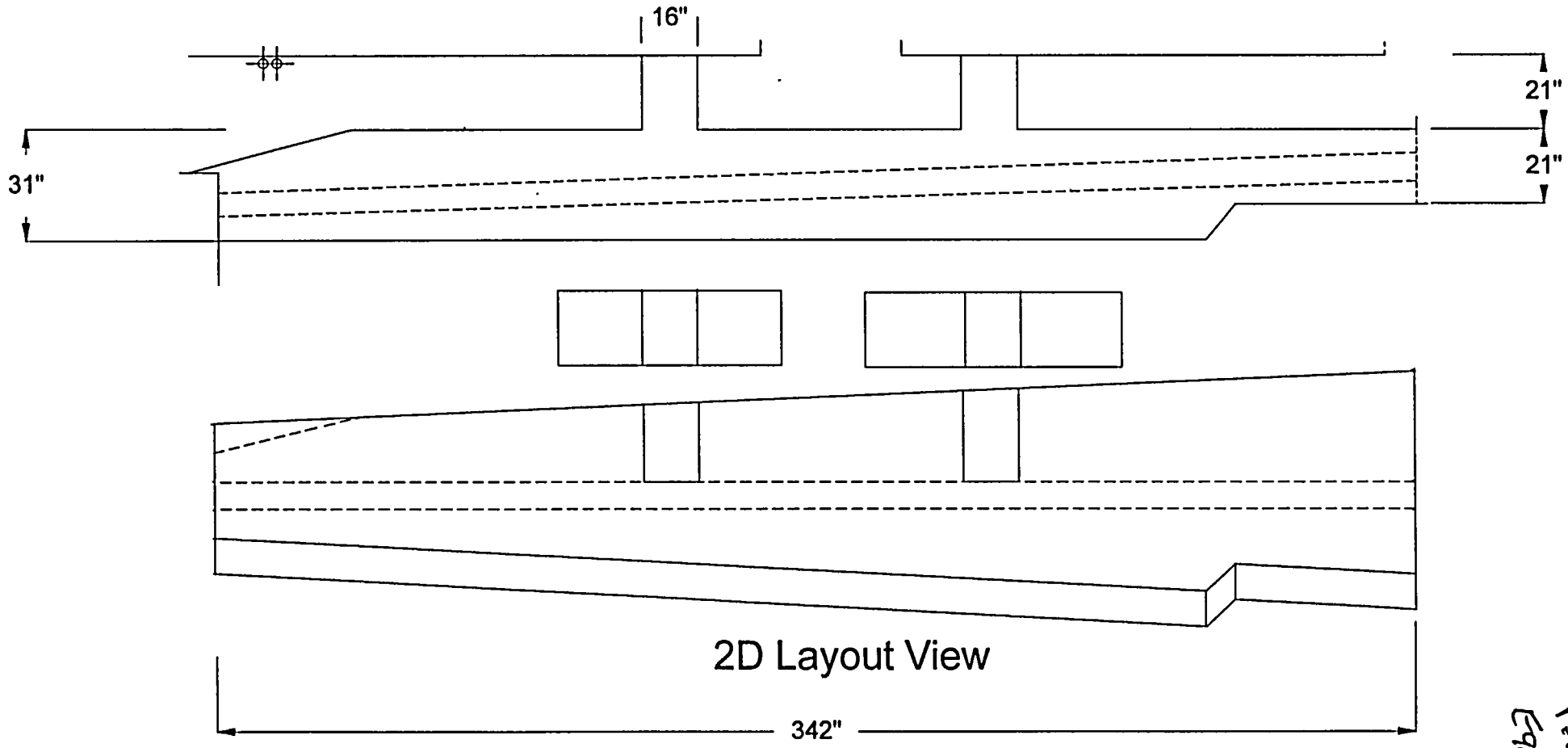

2D Layout View

ATTACHMENT 2 . 7

Page 21 of 76
EQ00-03-025

Page 22 of 76
E900-03-025

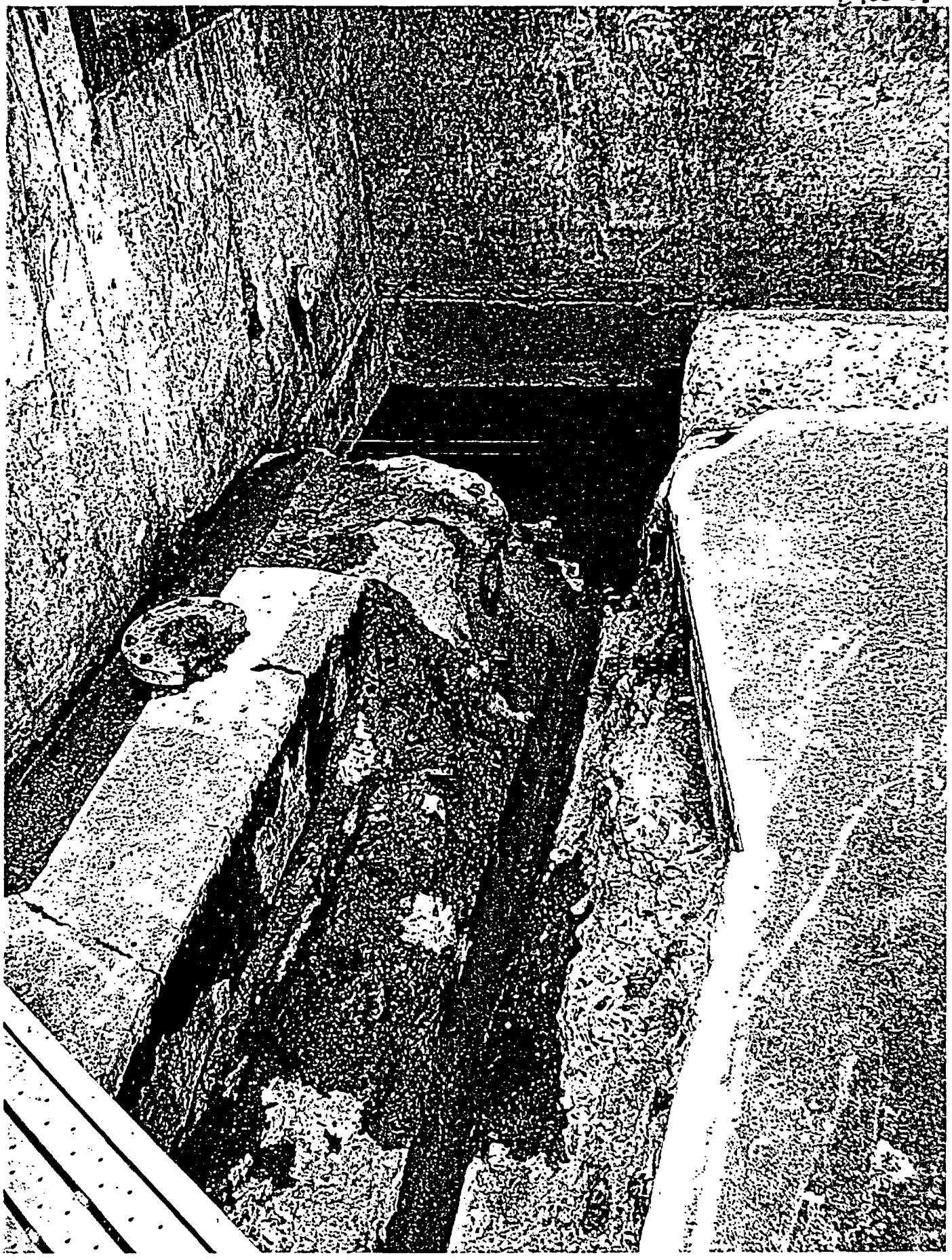

ATTACHMENT 2.8

SECTION 5

Plan View ~ 10000 in sq

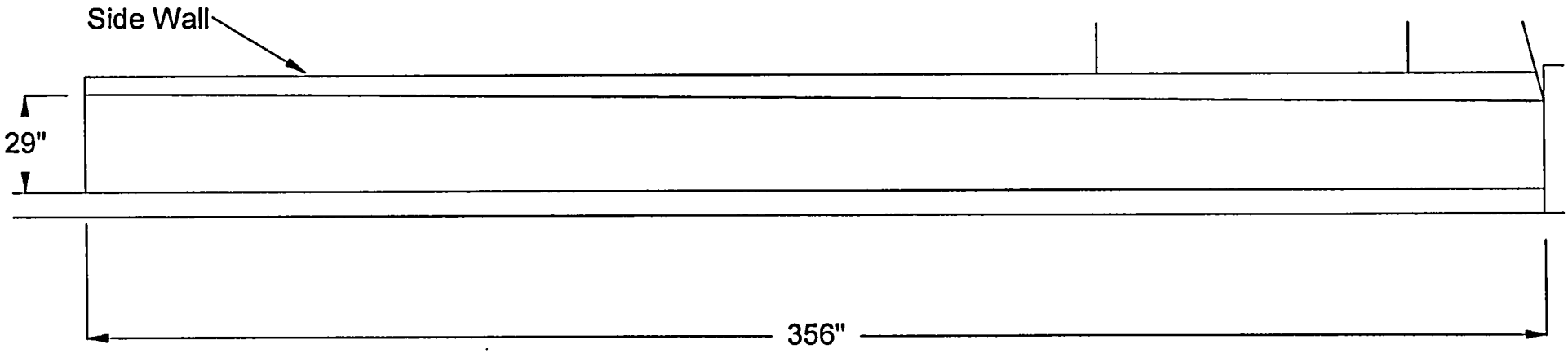

ATTACHMENT 2 . 9

Page 23 of 76
E906-03-025

ATTACHMENT 2.10

SECTION 6

Plan View ~ 5849 in sq

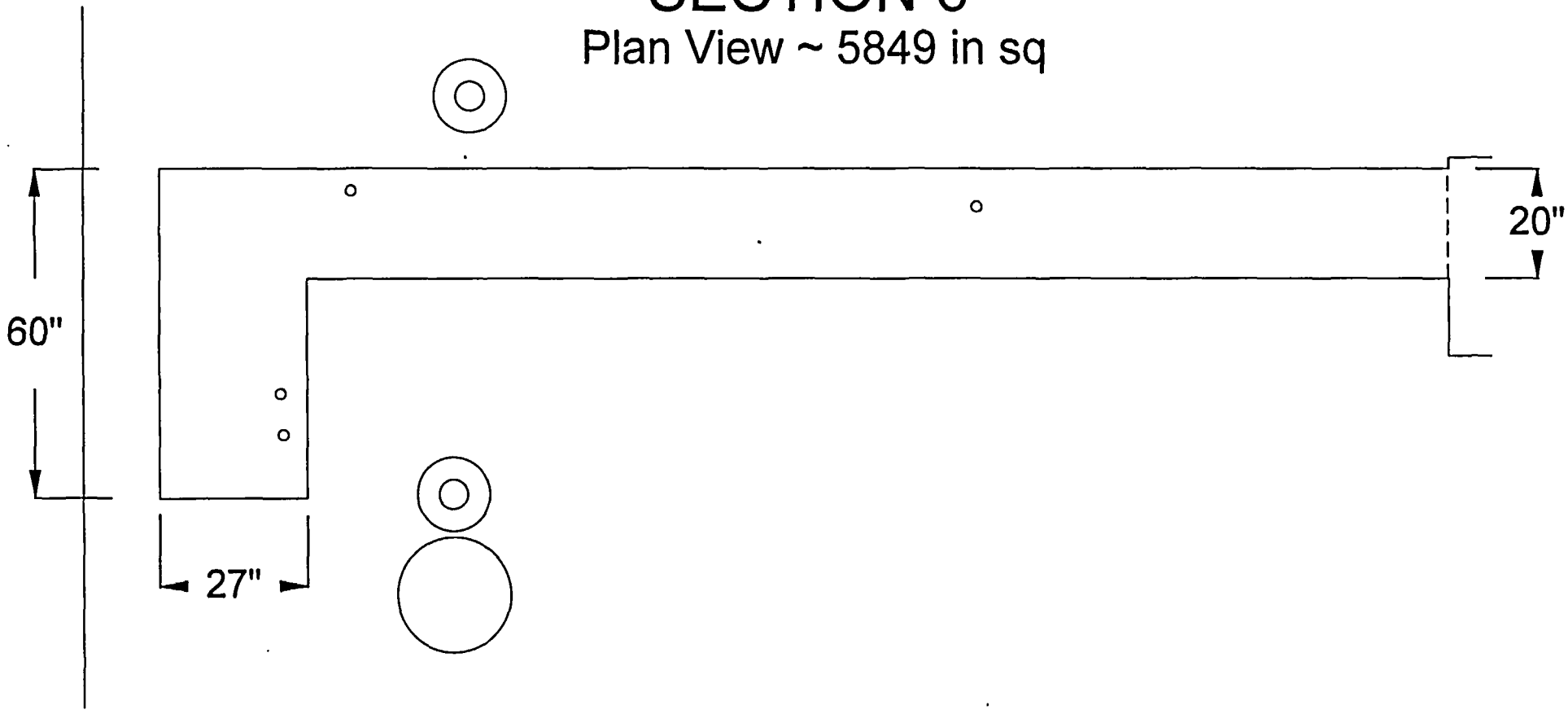

ATTACHMENT 2 . 11

Page 25 of 7
E900-03-025

ATTACHMENT 2 . 12

Page 26 of 76
E90-03-025

SECTION 7

Plan View ~ 12494 in sq

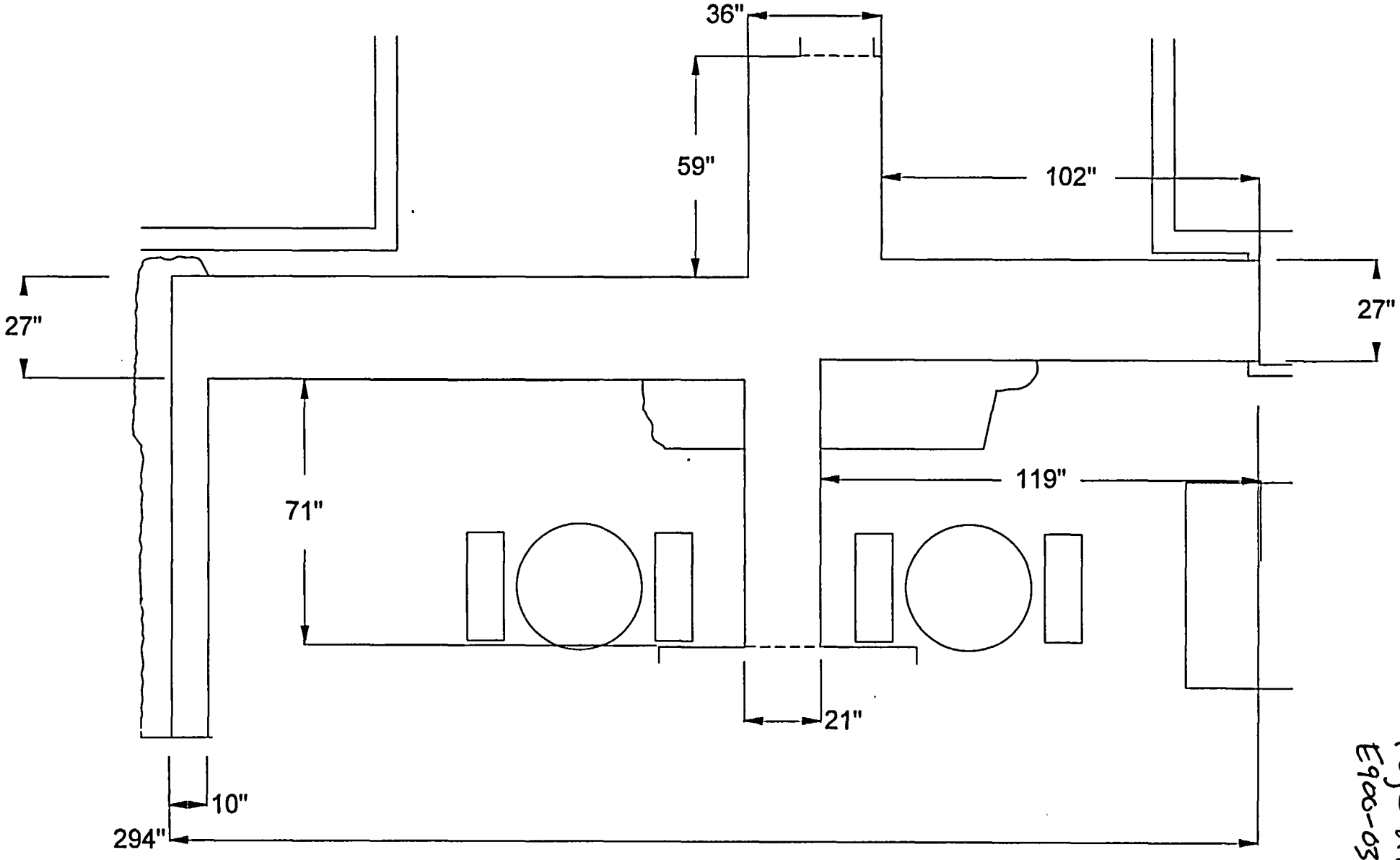

ATTACHMENT 2.13

Page 27 of 76
E900-03-025

E900-03-025 Page 28 of 76

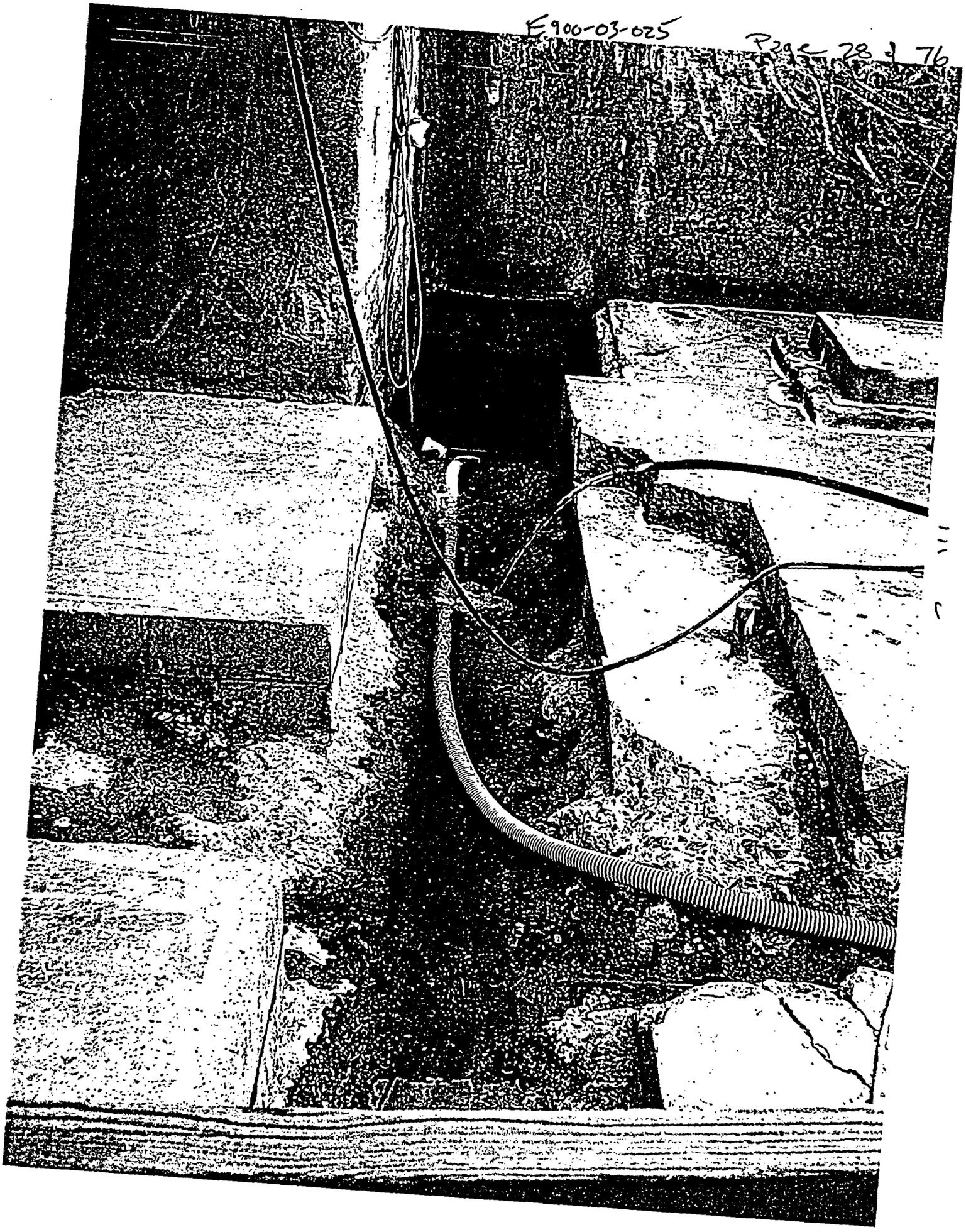

15

E900-03-025 Page 30 of 76

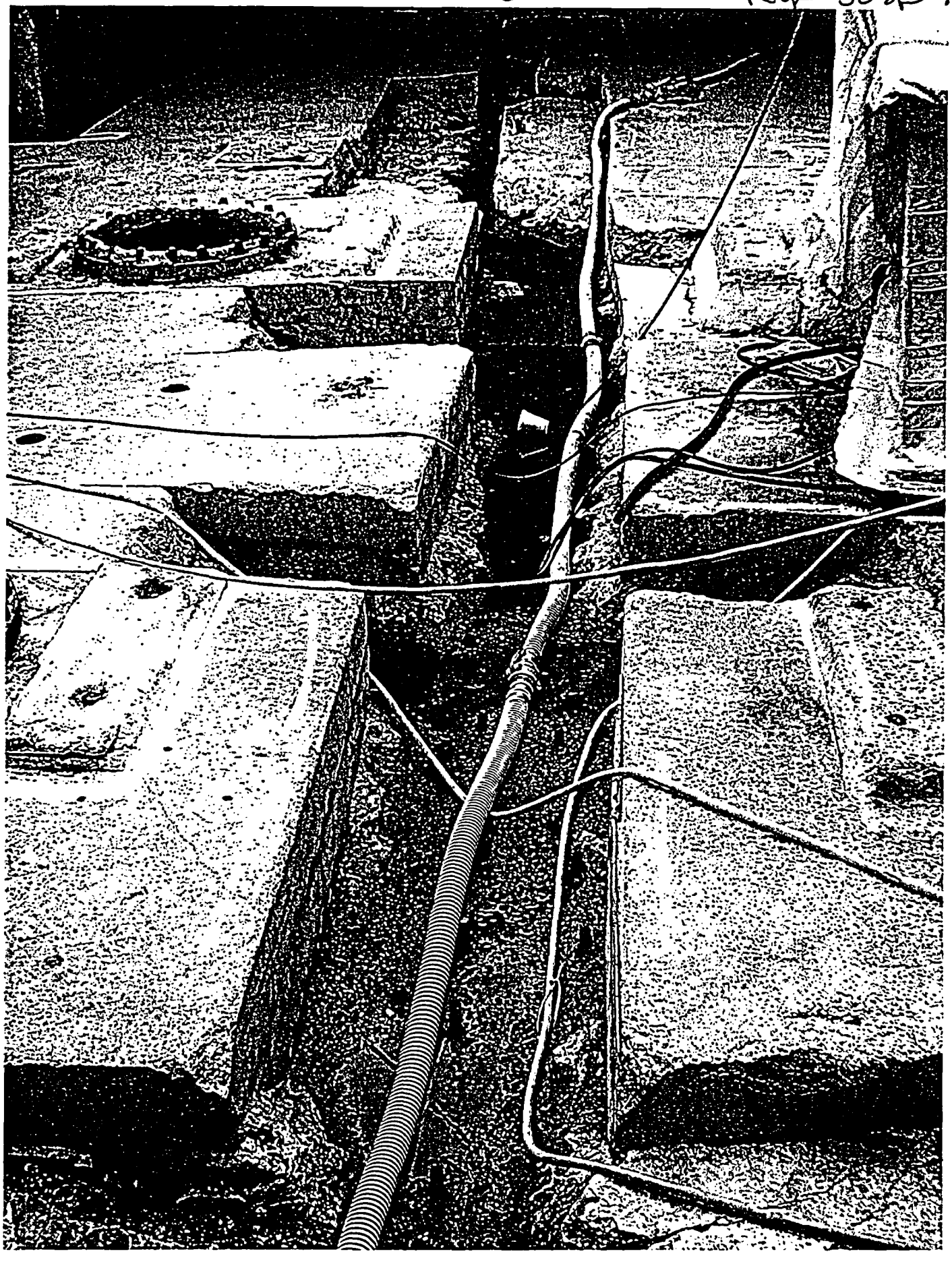

16

SECTION 8
Plan View ~ 6400 in sq

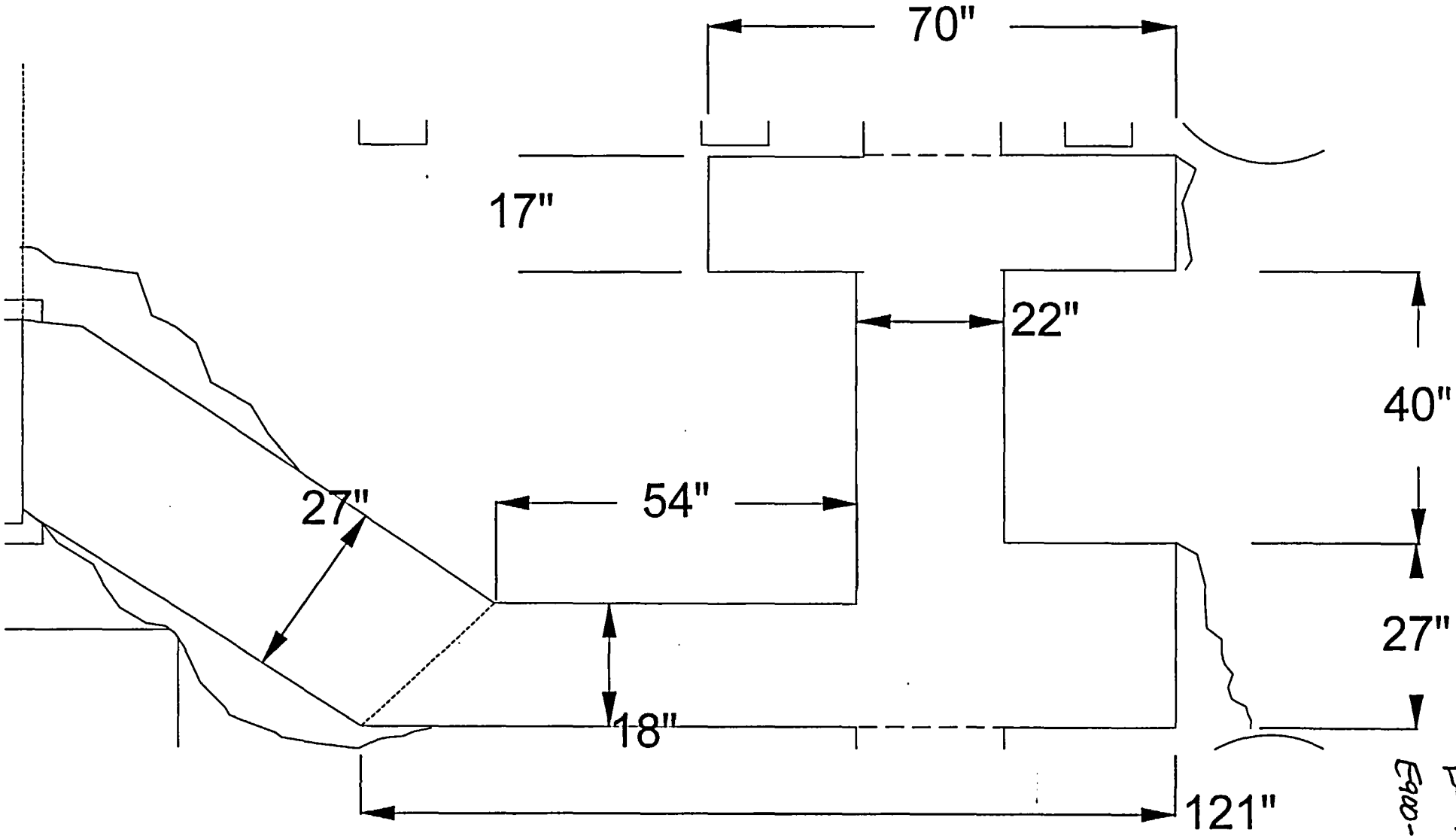

ATTACHMENT 2 . 17

Page 31 of 7.
E900-03-025

Page 32 of 7
E900-03-025

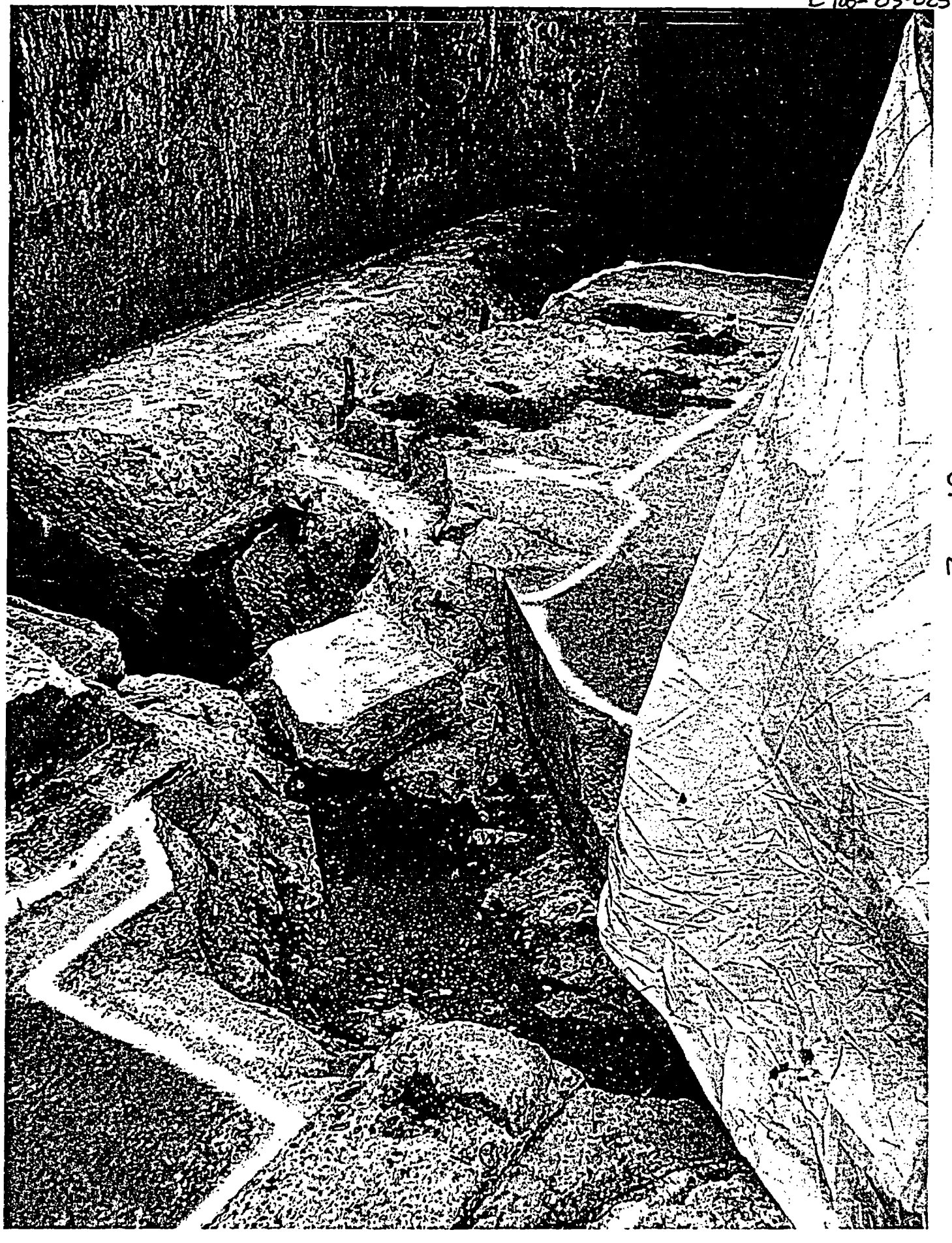

ATTACHMENT 2 . 18

SECTION 9

Plan View ~ 9849 in sq

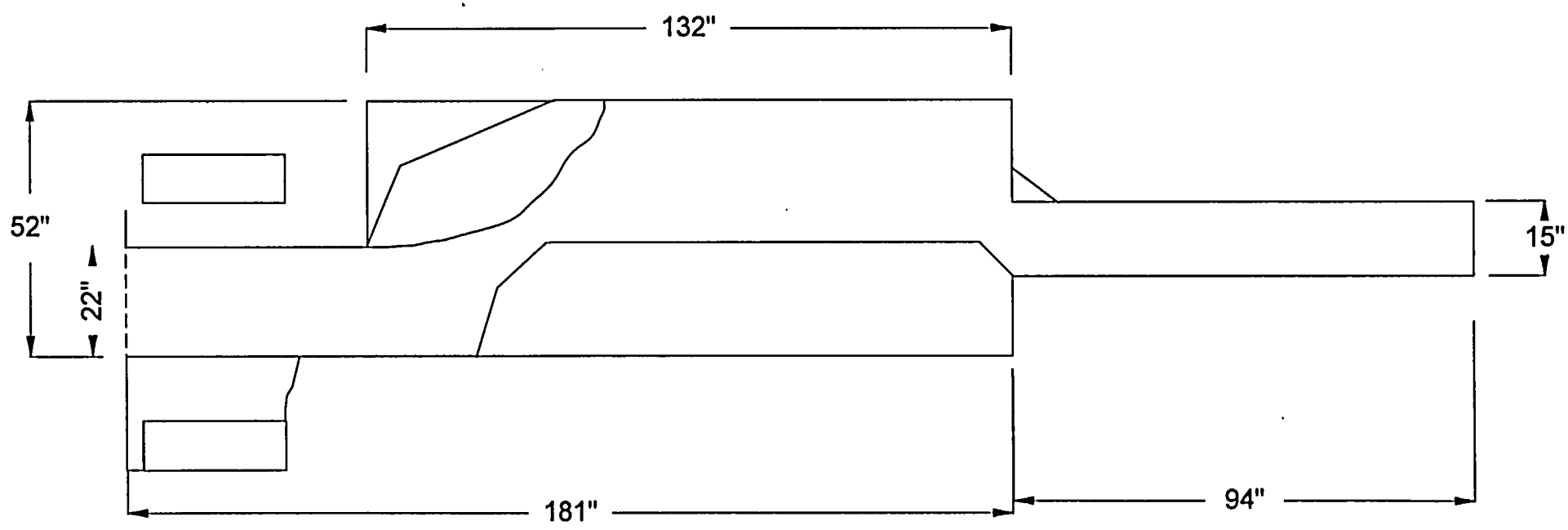

ATTACHMENT 2.19

Page 33 of 76
E900-03-025

SE SUMP
~9202 sq in

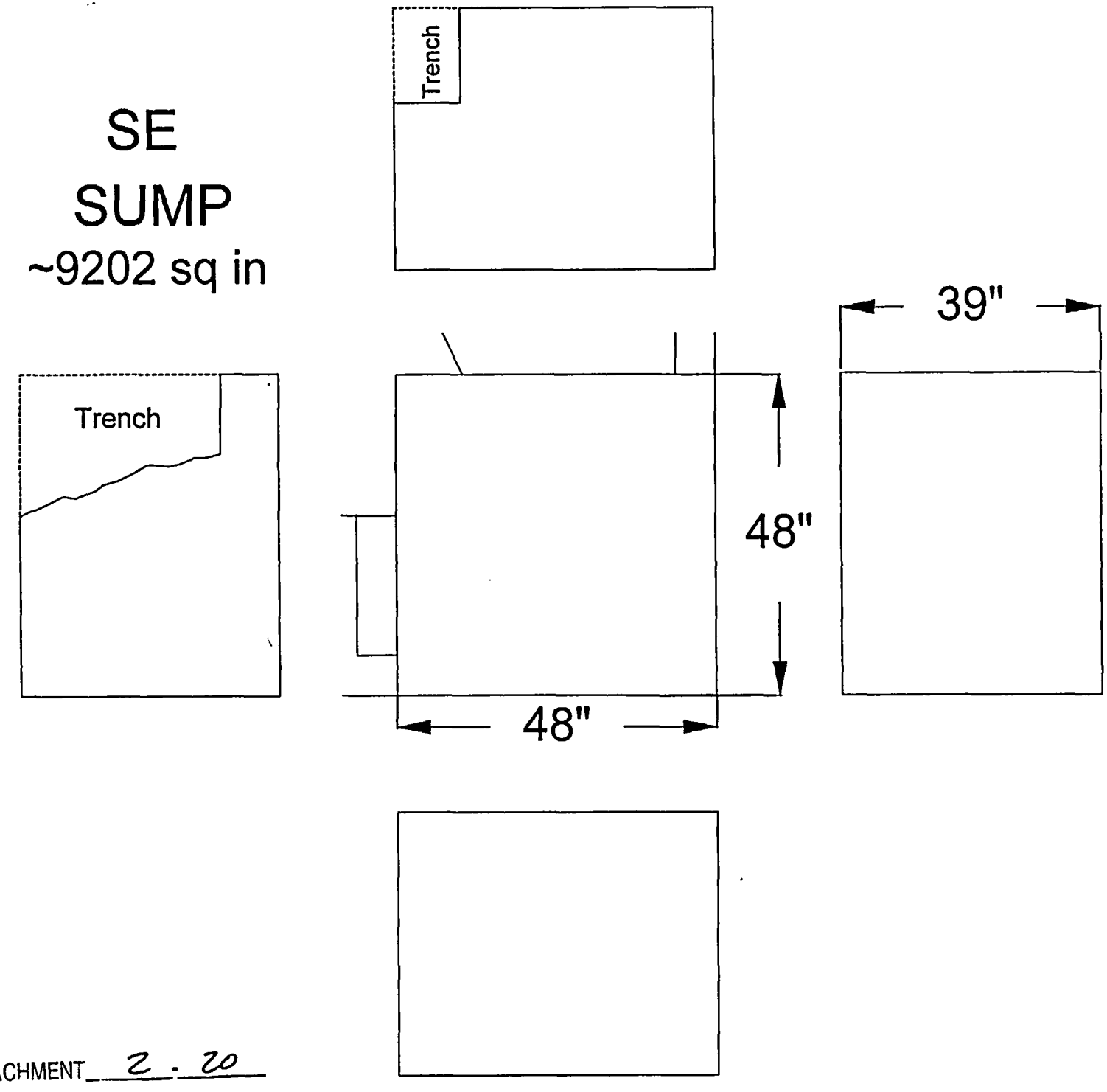

ATTACHMENT 2.20

Page 34 of 76
E906-03-025

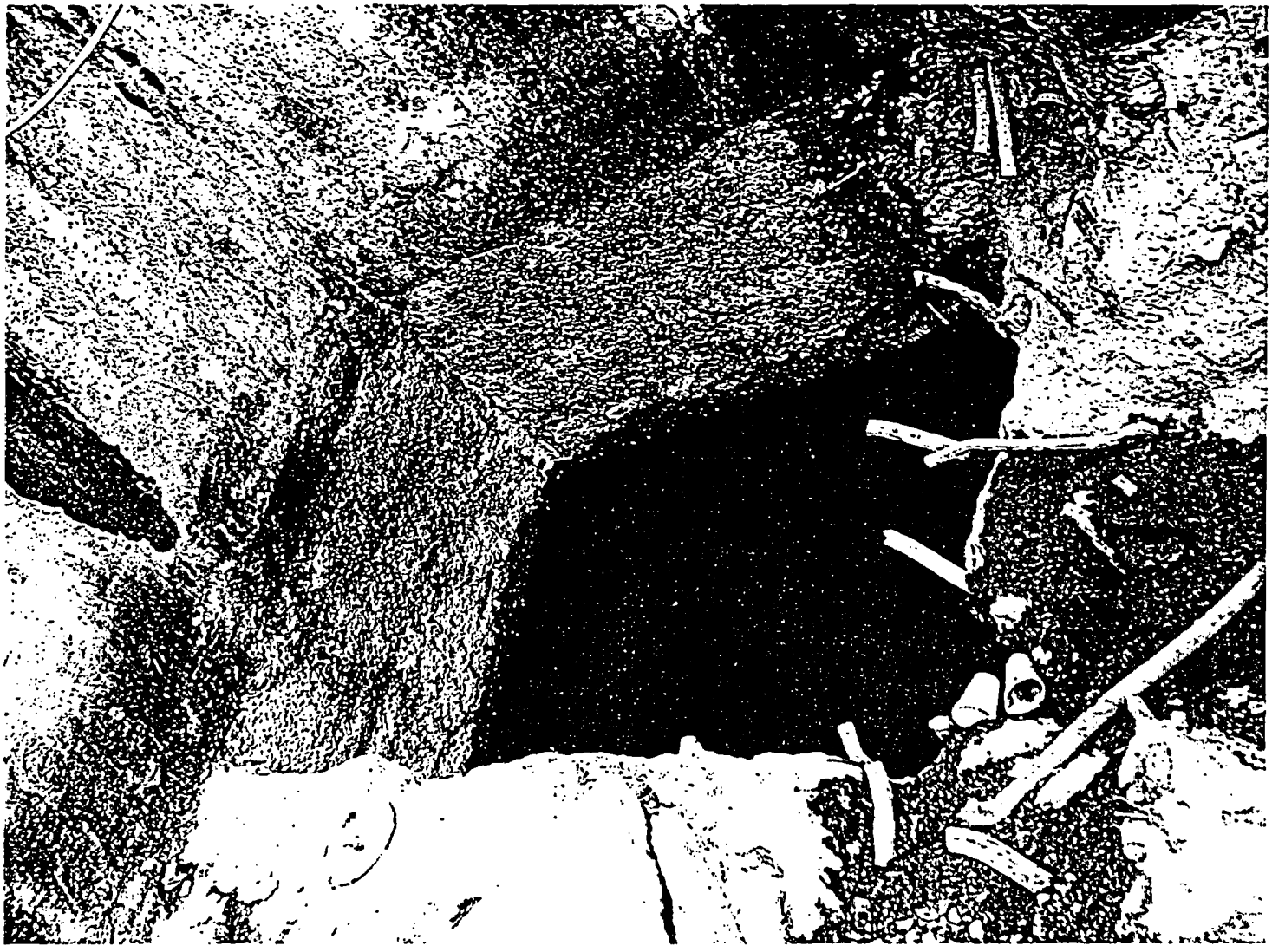

ATTACHMENT 2.21

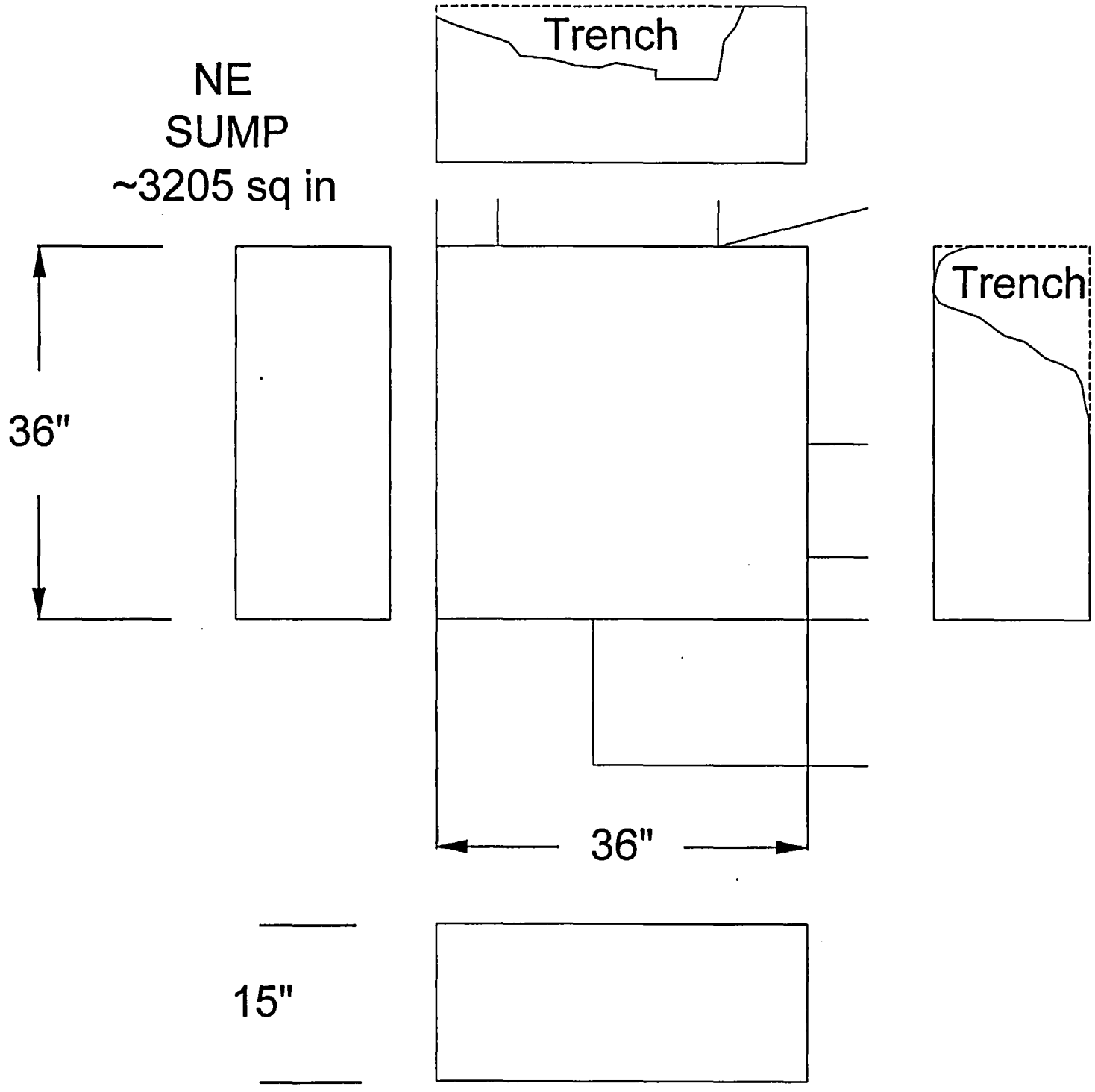

ATTACHMENT 2.22

Page 36 of 7
E900-03-025

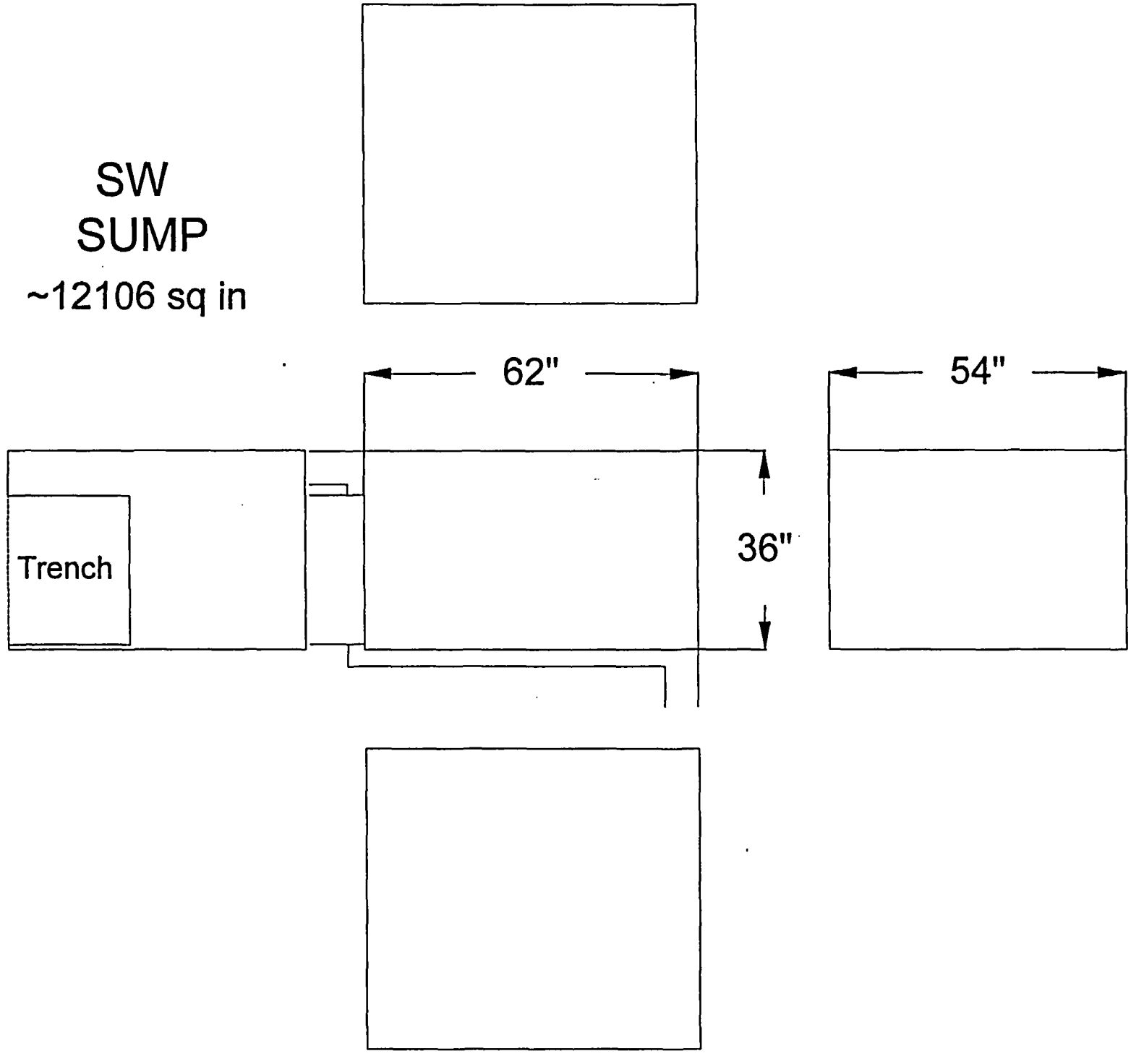

ATTACHMENT 2.23

Page 37 of
E900-03-025

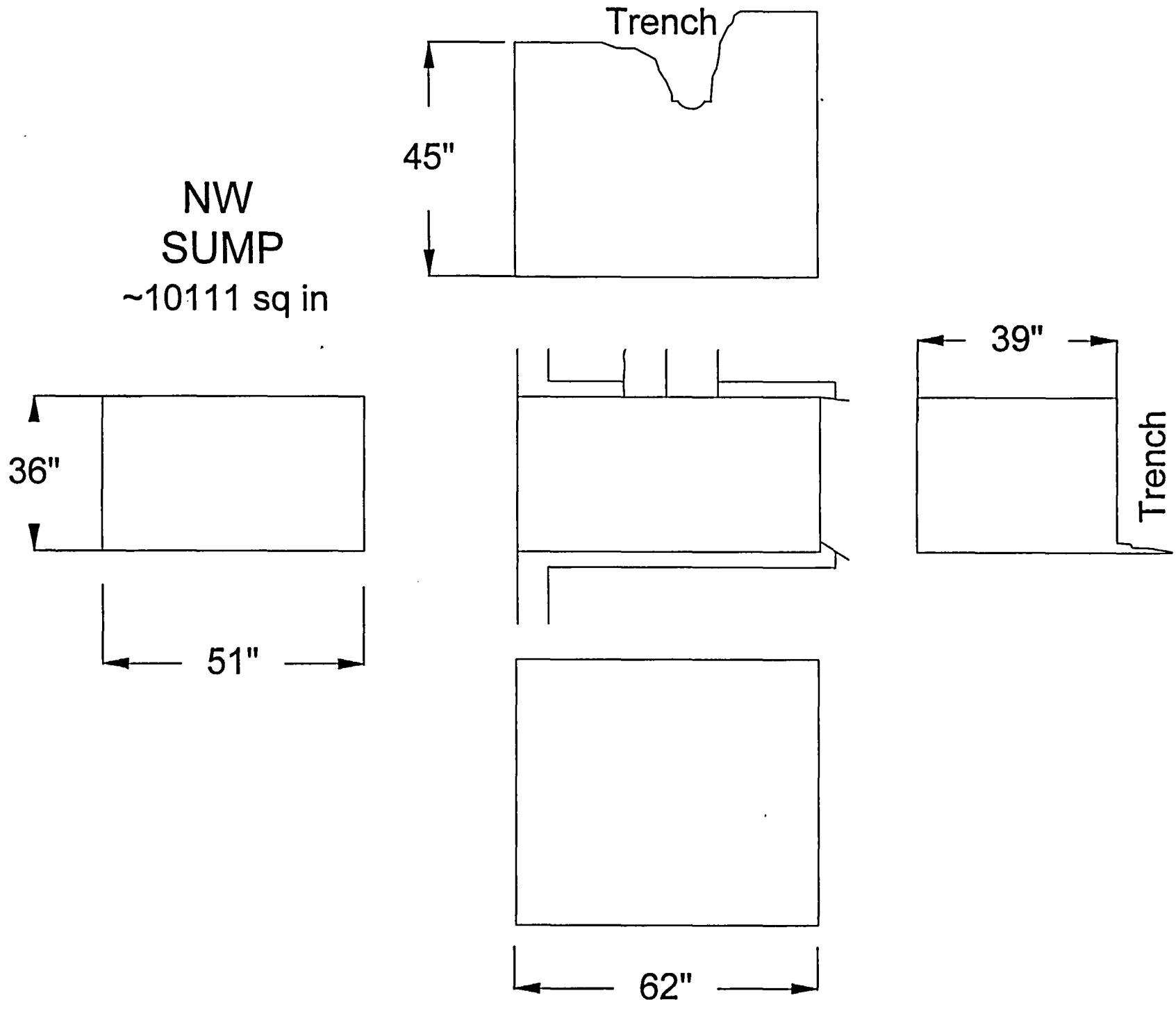

ATTACHMENT 2.24

Page 38 of 74
E900-03-025

Page 39 of 7
E900-03-025

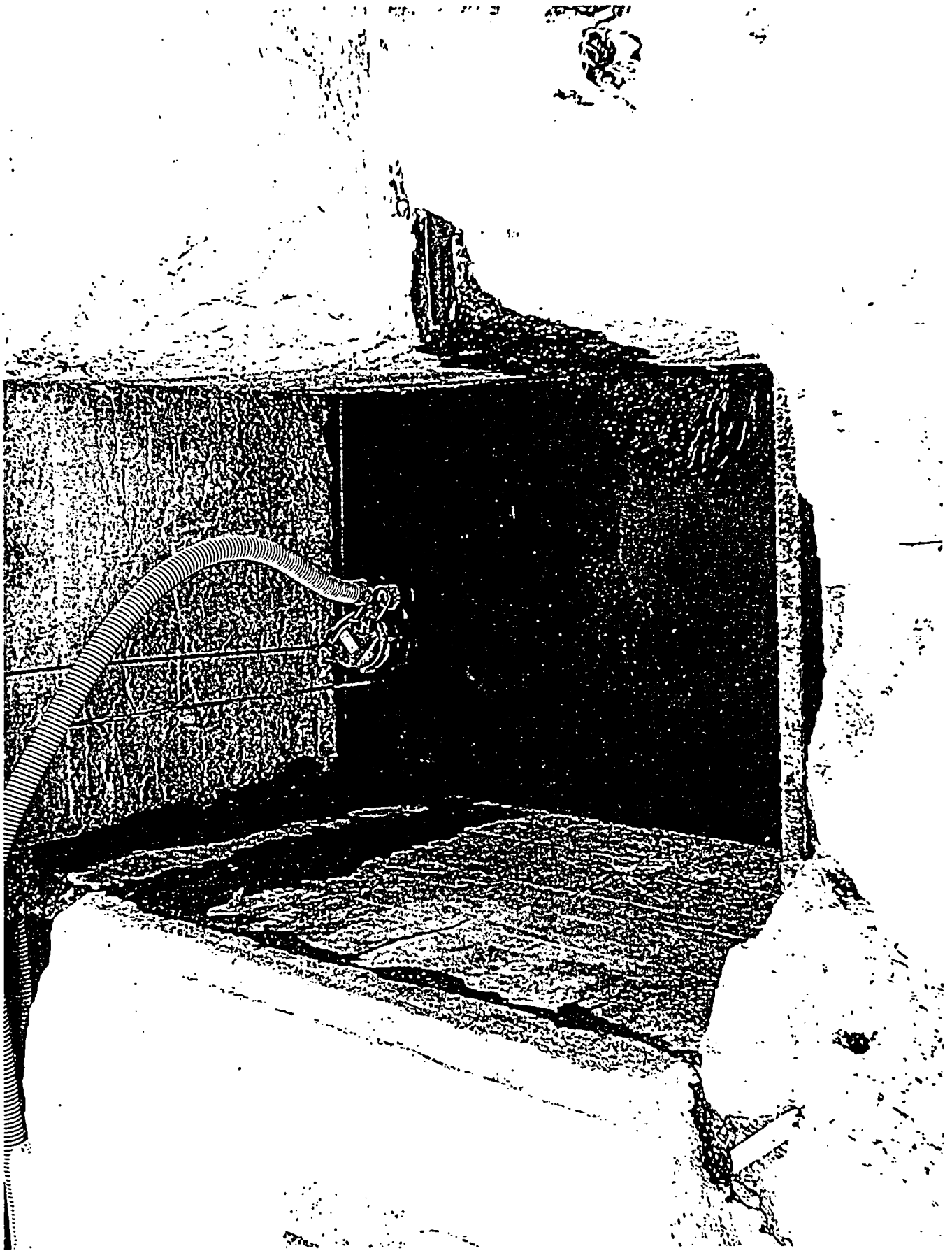

ATTACHMENT 2.25

Site Report

Site Summary

Site Name: SSGS Trench Area

Planner(s): BHB

Contaminant Summary

NOTE: Surface soil DCGLw units are pCi/g.
Building surface DCGLw units are dpm/100 cm².

Contaminant	Type	DCGLw	Screening Value Used?	Area (m²)	Area Factor
Gross Activity	Building Surface	13,000	No	0.25	10.1
				1	10.1
				4	3.4
				9	2
				16	1.5
				25	1.2
				36	1

BHB 10/6/03

ATTACHMENT 3.1

Building Surface Survey Plan

Contaminant Summary

Contaminant	DCGLw (dpm/100 cm²)
Gross Activity	13,000

Beta Instrumentation Summary

Gross Beta DCGLw (dpm/100 cm²): 13,000
Total Efficiency: 0.06
Gross Beta DCGLw (cpm): 983

ID	Type	Mode	Area (cm²)
7	GFPC	Beta	126

Contaminant	Energy[1]	Fraction[2]	Inst. Eff.	Surf. Eff.	Total Eff.
Gross Activity	187.87	1.0000	0.12	0.50	0.0595

[1] Average beta energy (keV) [N/A indicates alpha emission]
[2] Activity fraction

Gross Survey Unit Mean (cpm): 339 ± 65 (1-sigma)
Count Time (min): 1

Material	Number of BKG Counts	Average (cpm)	Standard Deviation (cpm)	MDC (dpm/100 cm²)
Concrete	7	298	56.8	1,101

ATTACHMENT 3.2

Page 42 of 7
E900-03-035

Building Surface Survey Plan

Survey Plan Summary

Site:	SSGS Trench Area		
Planner(s):	BHB		
Survey Unit Name:	SSGS Area Trench & Sumps		
Comments:			
Area (m²):	100	Classification:	1
Selected Test:	WRS	Estimated Sigma (cpm):	65.2
DCGL (cpm):	983	Sample Size (N/2):	8
LBGR (cpm):	800	Estimated Conc. (cpm):	41
Alpha:	0.050	Estimated Power:	1.00
Beta:	0.100	EMC Sample Size (N):	8

Prospective Power Curve

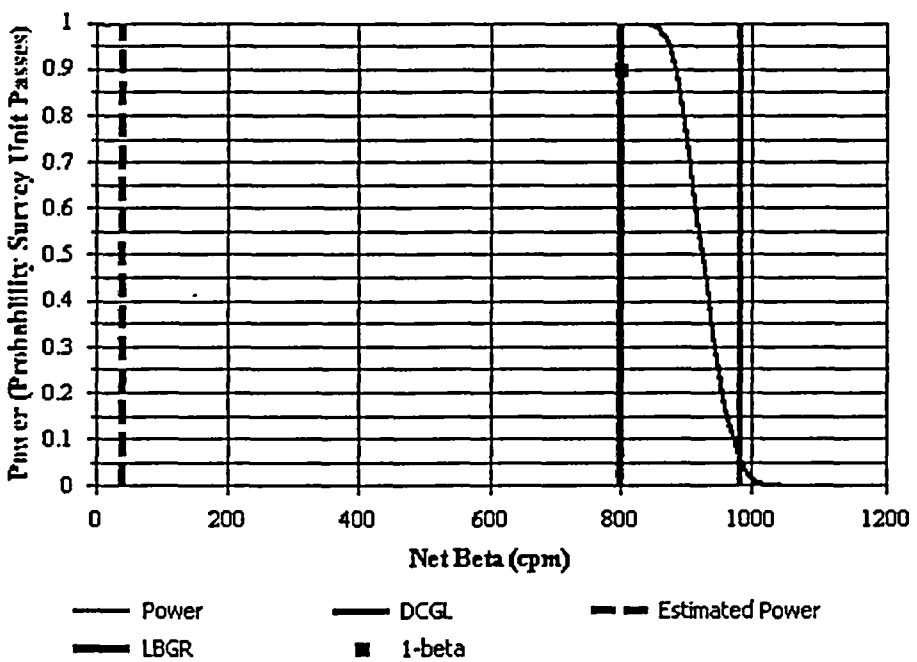

ATTACHMENT 3.3

Elevated Measurement Comparison (EMC) for Beta

Follow the order of each tab below to perform the EMC.

1) Enter Scanning Instrument Efficiencies | 2) Enter Scan MDC Parameters | **3) View EMC Results**

Scan MDC Required per Contaminant

Contaminant	DCGLw*	Area Factor	Scan MDC Required*
Gross Activity	13,000	1.75	22,750

Statistical Design		Hot Spot Design	
N/2:	8	Actual Scan MDC*:	2,175
Bounded Area (m²):	12.5	Area Factor:	N/A
Area Factor:	1.75	Bounded Area (m²):	N/A
DCGLw*:	13,000	Post-EMC N/2:	8
Scan MDC Required*:	22,750		

* dpm/100 cm²

COMPASS

No additional samples are required because the actual scan MDC is less than the DCGLw for each contaminant.

OK

Enable Trainin

v 0.0

SECTION 1 VSP

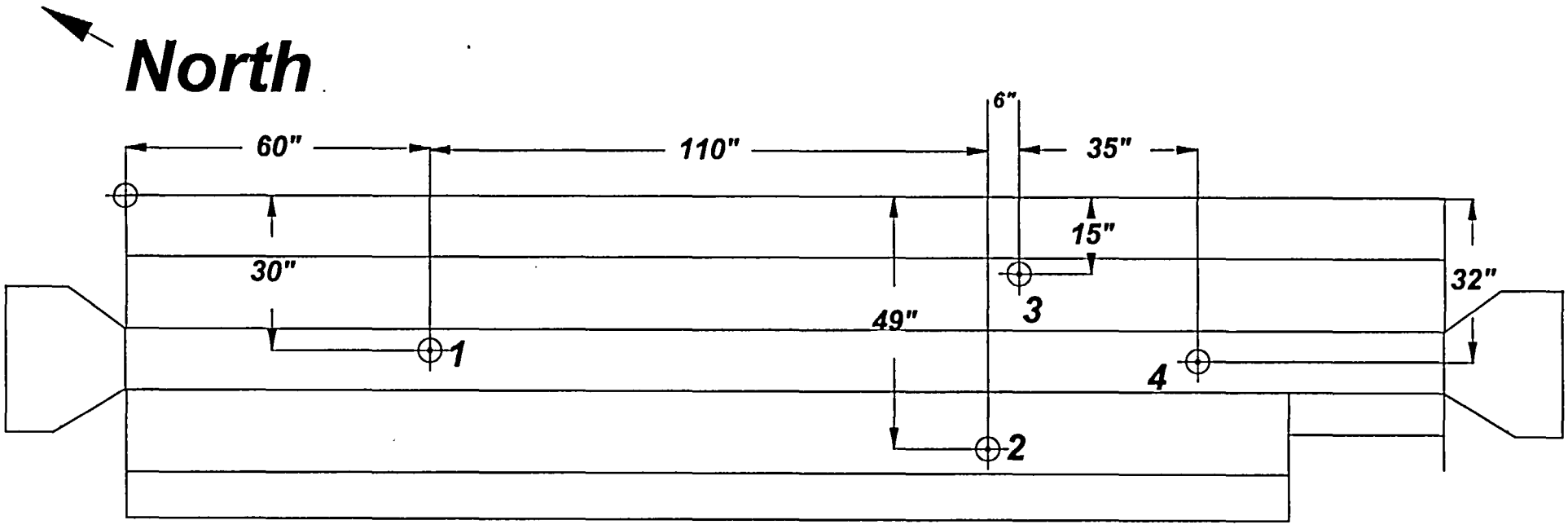

ATTACHMENT 4 . 1

Page 44 of 76
E90-03-025

SECTION 2 VSP

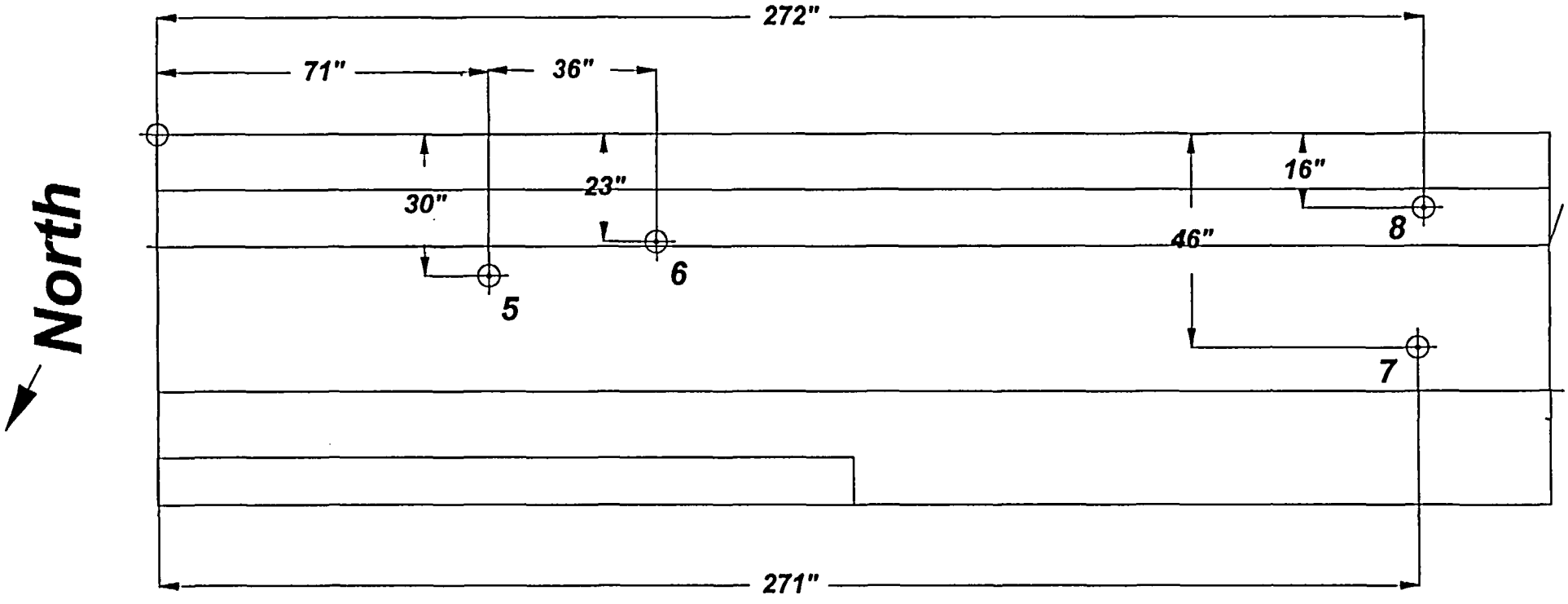

ATTACHMENT 4.2

Page 45 of 74
EG00-03-025

SECTION 3 VSP

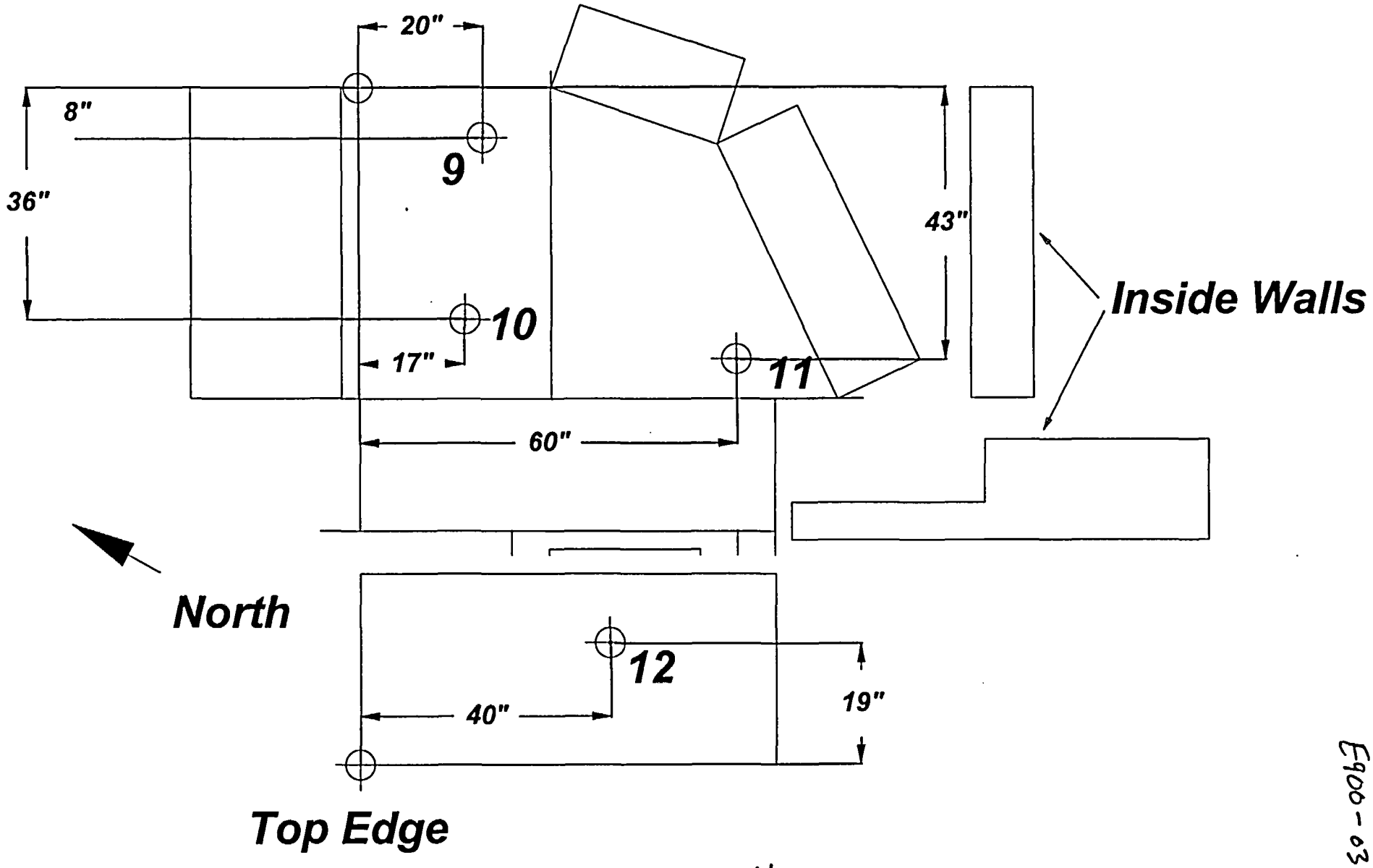

ATTACHMENT 4.3

Page 46 of 71
E900-03-025

SECTION 4 VSP

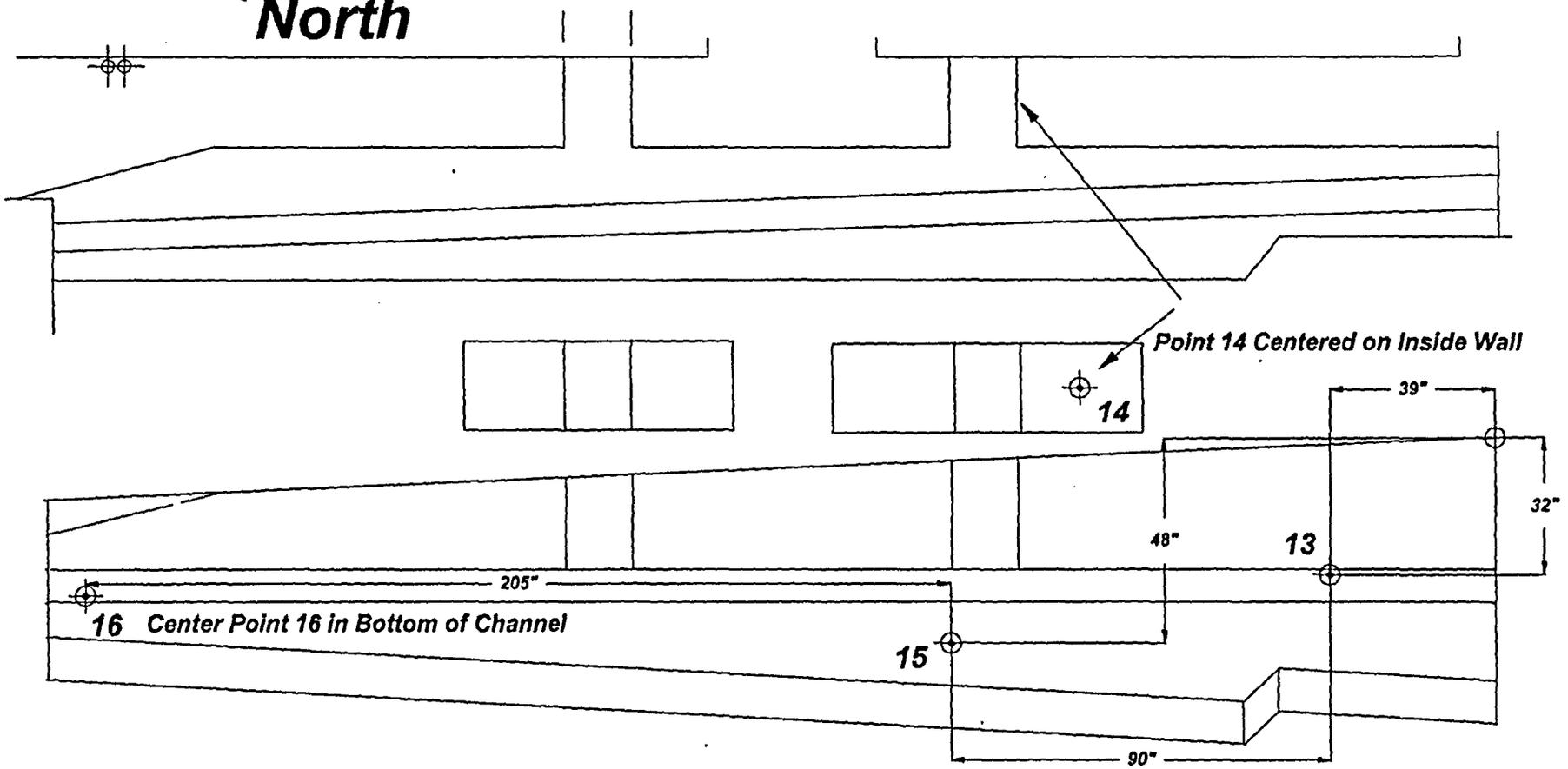

ATTACHMENT 4.4

Page 47 of 71
E900-03-025

SECTION 5 VSP

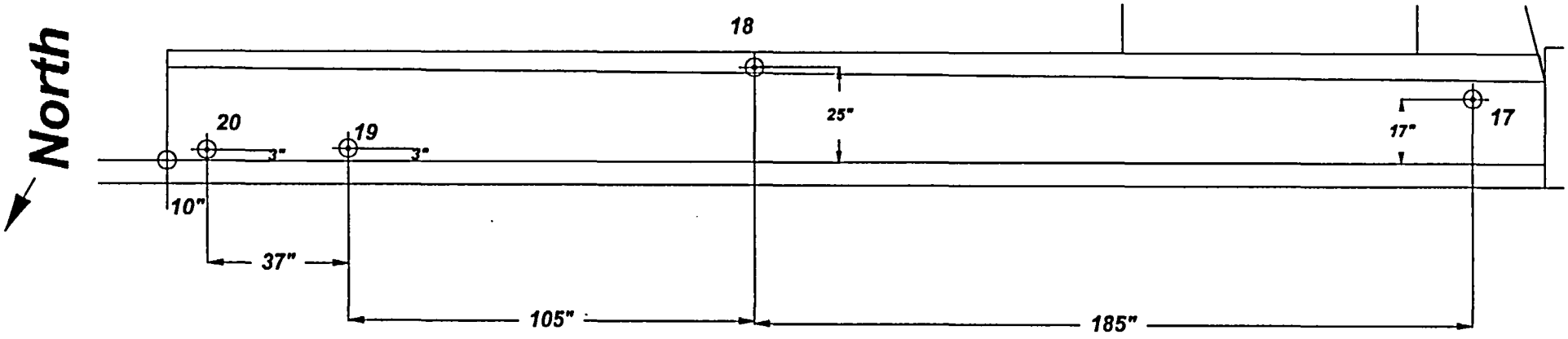

ATTACHMENT 4 . 5

Page 48 of 76
ESD-03-025

SECTION 6 VSP

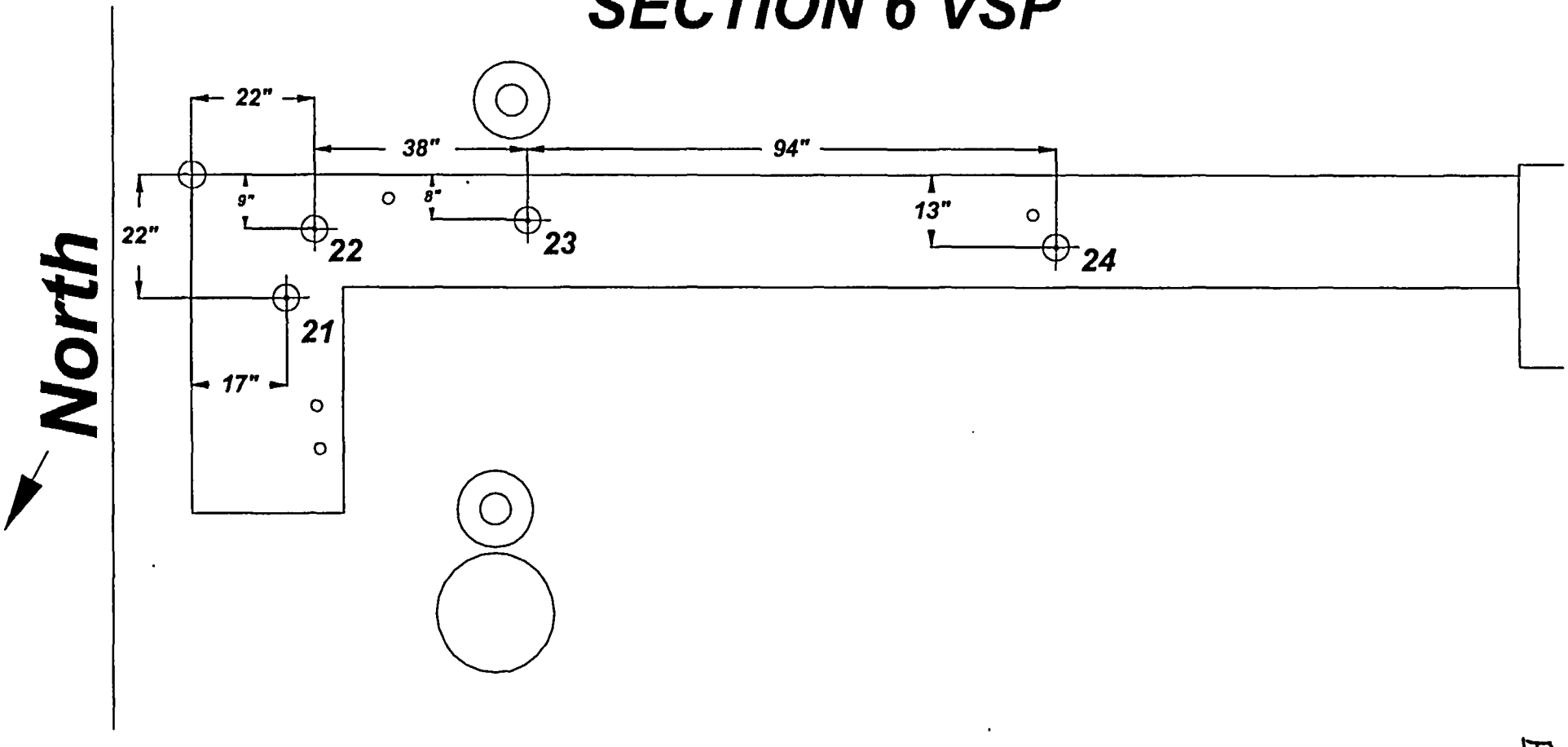

ATTACHMENT 4 . 6

Page 49 of 76
E98-03-025

SECTION 7 VSP

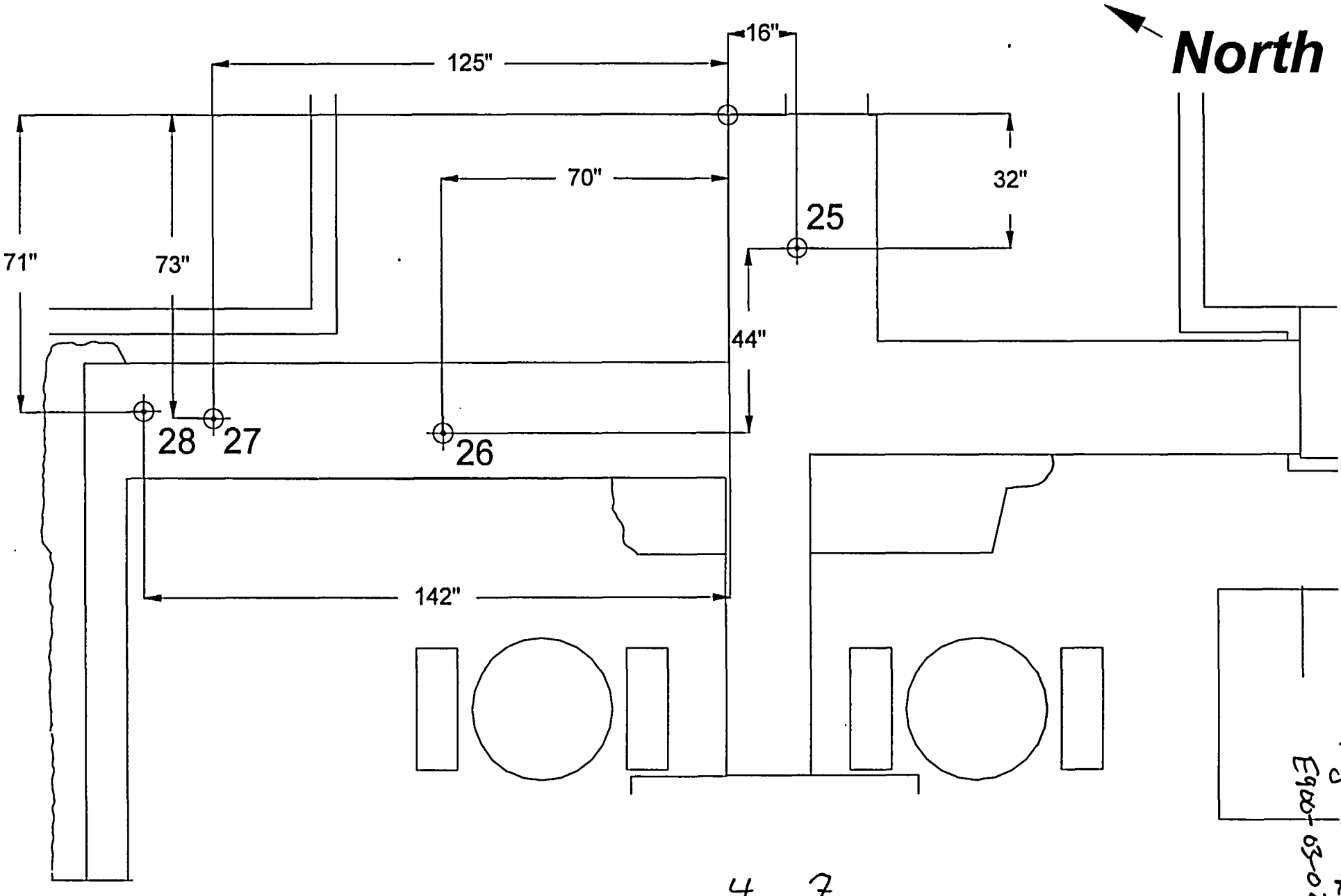

ATTACHMENT 4 . 7

Page 50 of 76
EQ00-03-025

SECTION 8 VSP

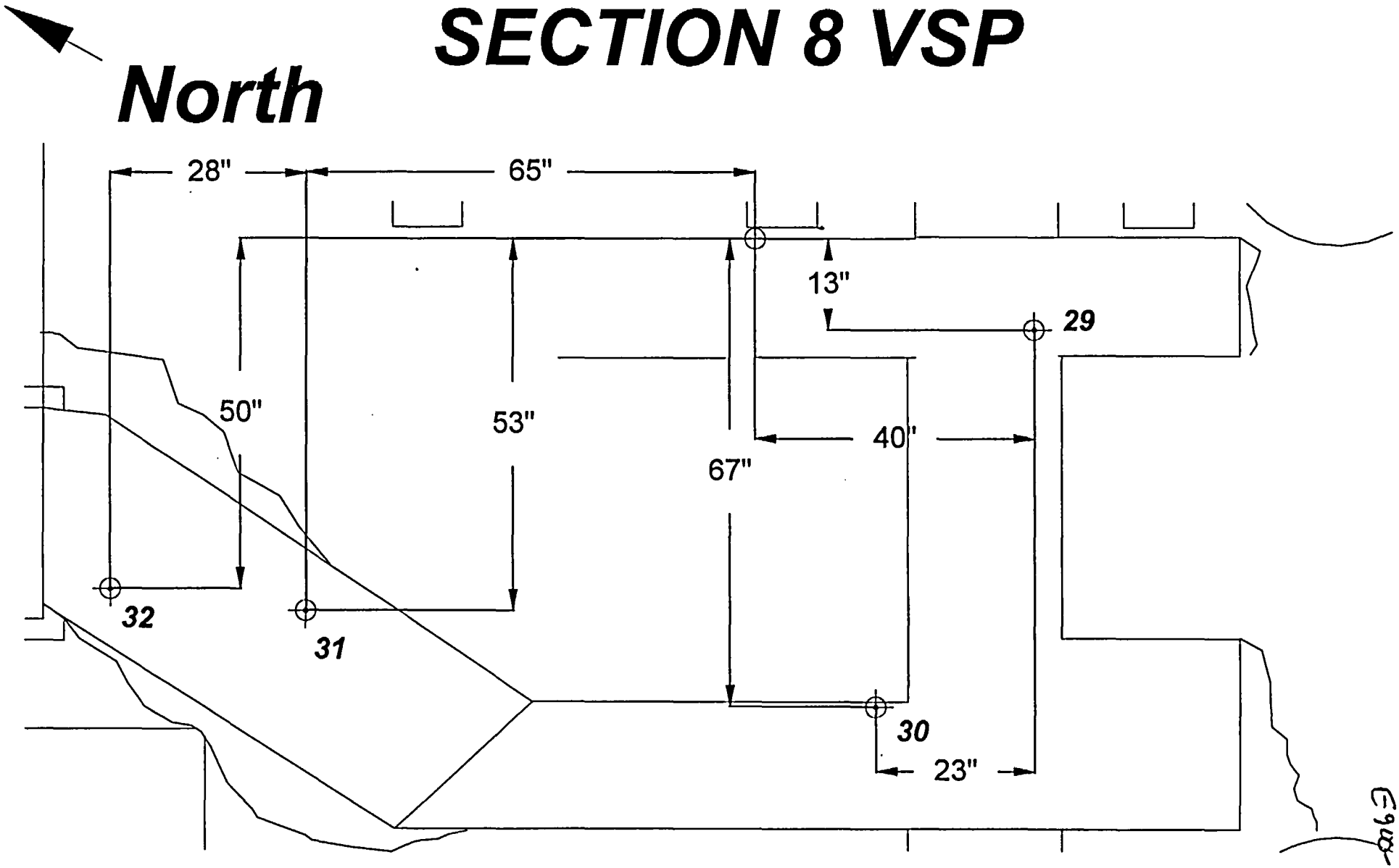

ATTACHMENT 4.8

Page 51 of 76
E90-03-025

SECTION 9 VSP

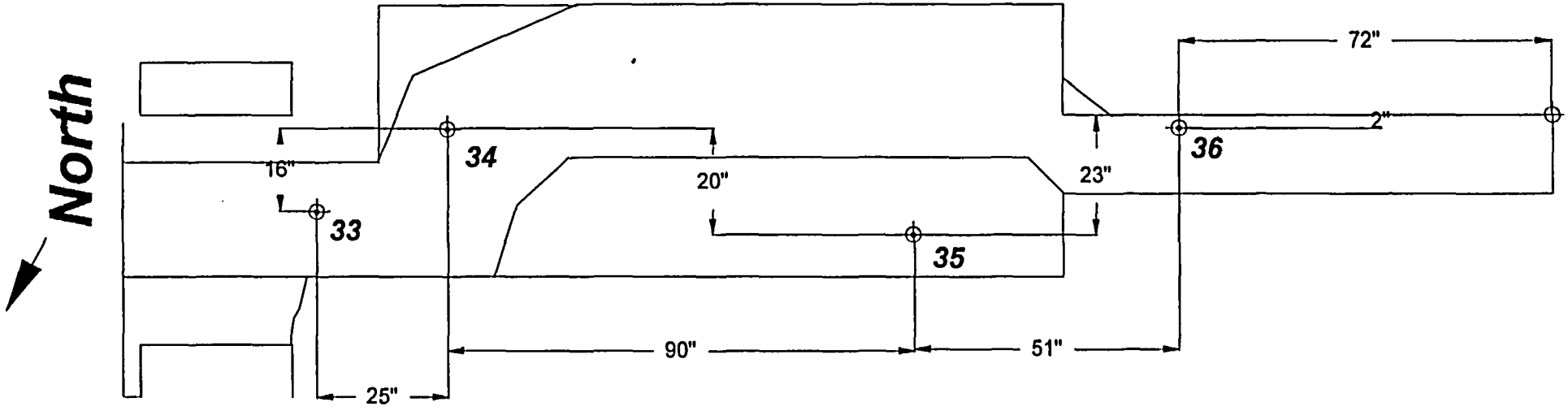

ATTACHMENT 4.9

Page 52 of 7
E900-03-025

SW SUMP VSP OUTPUT

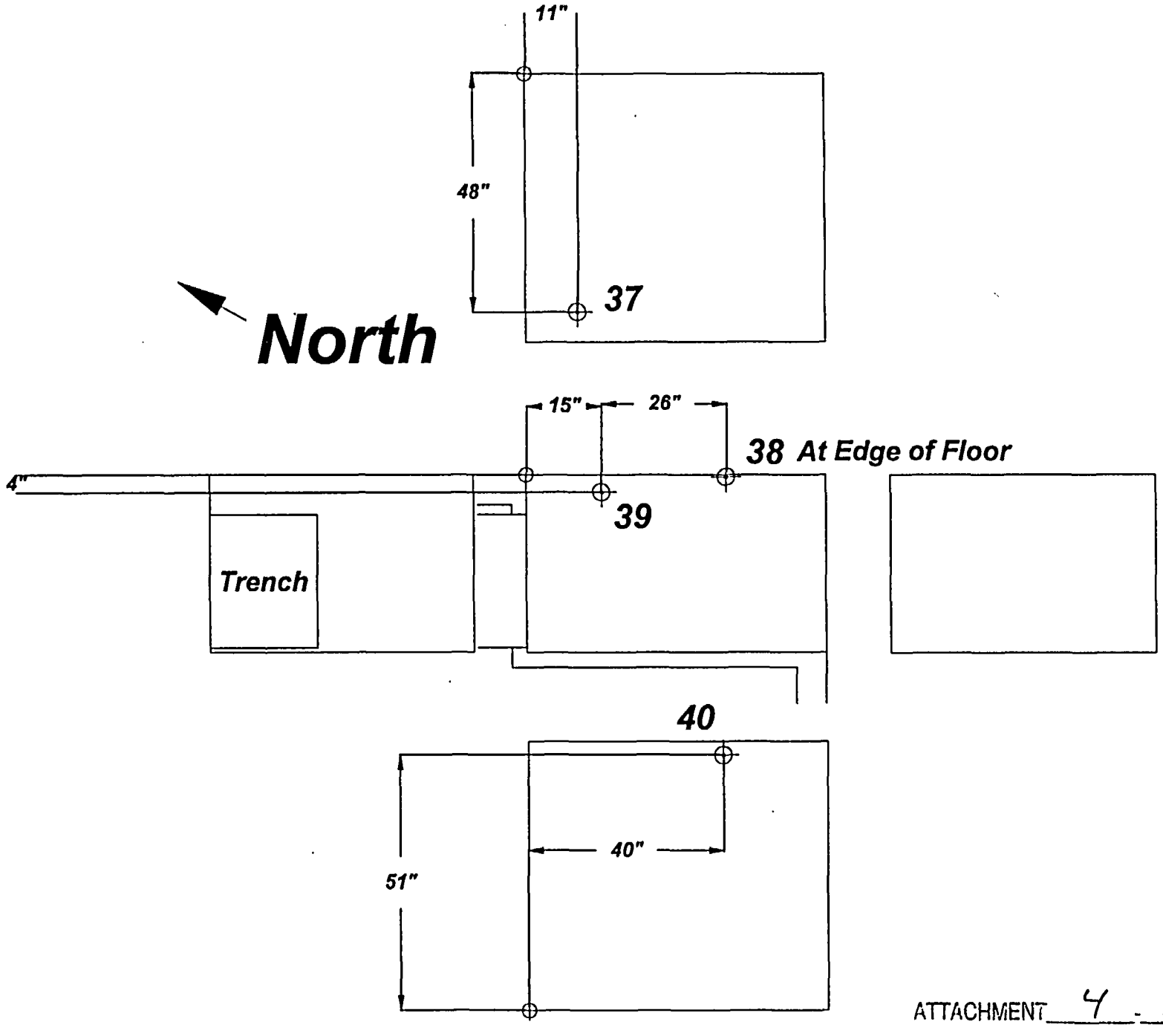

ATTACHMENT 4 - 10

Page 53 of 76
EQ00-03-025

NW SUMP VSP OUTPUT

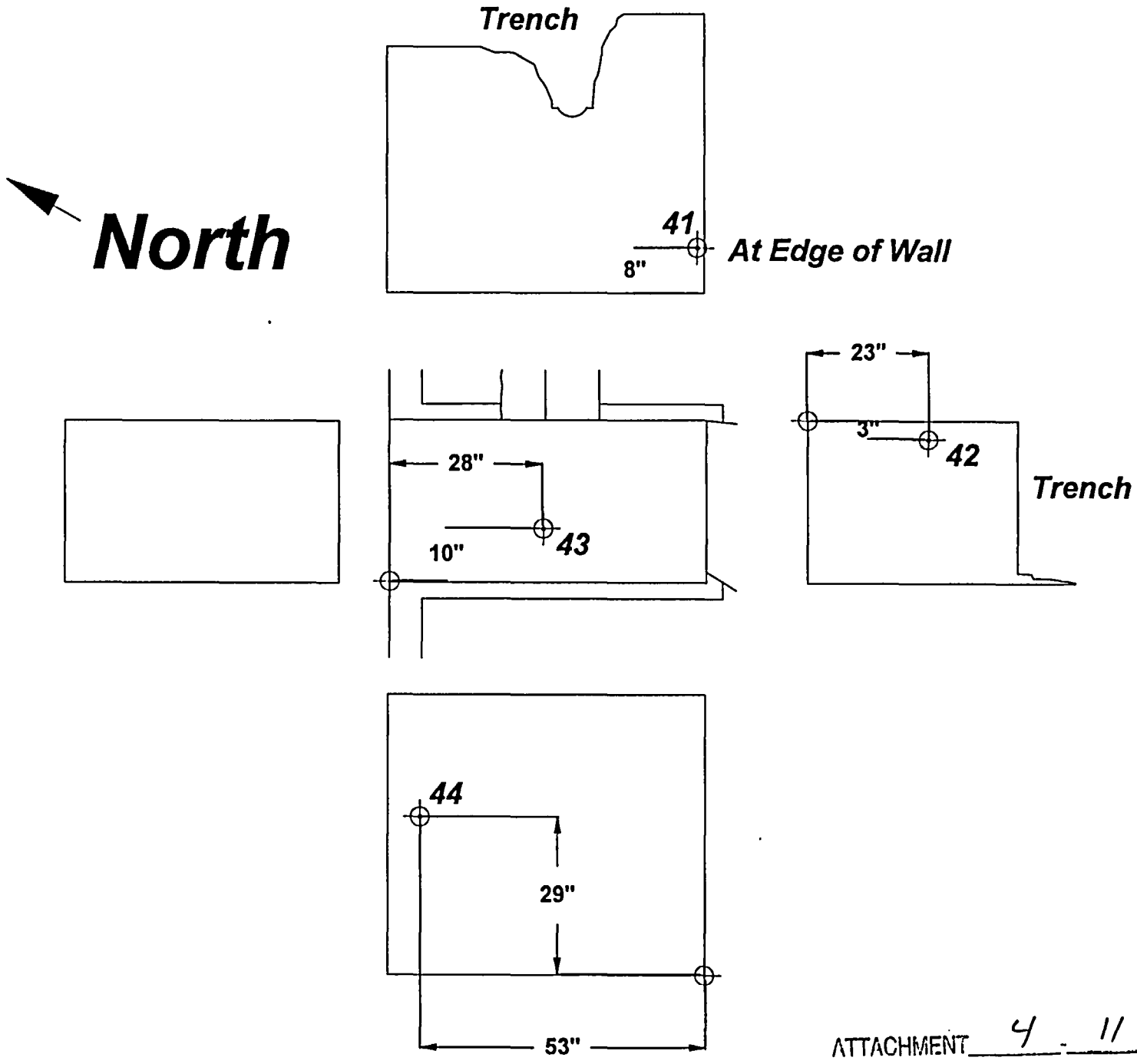

ATTACHMENT 4 - 11

Page 54 of 76
E900-03-025

SE SUMP VSP OUTPUT

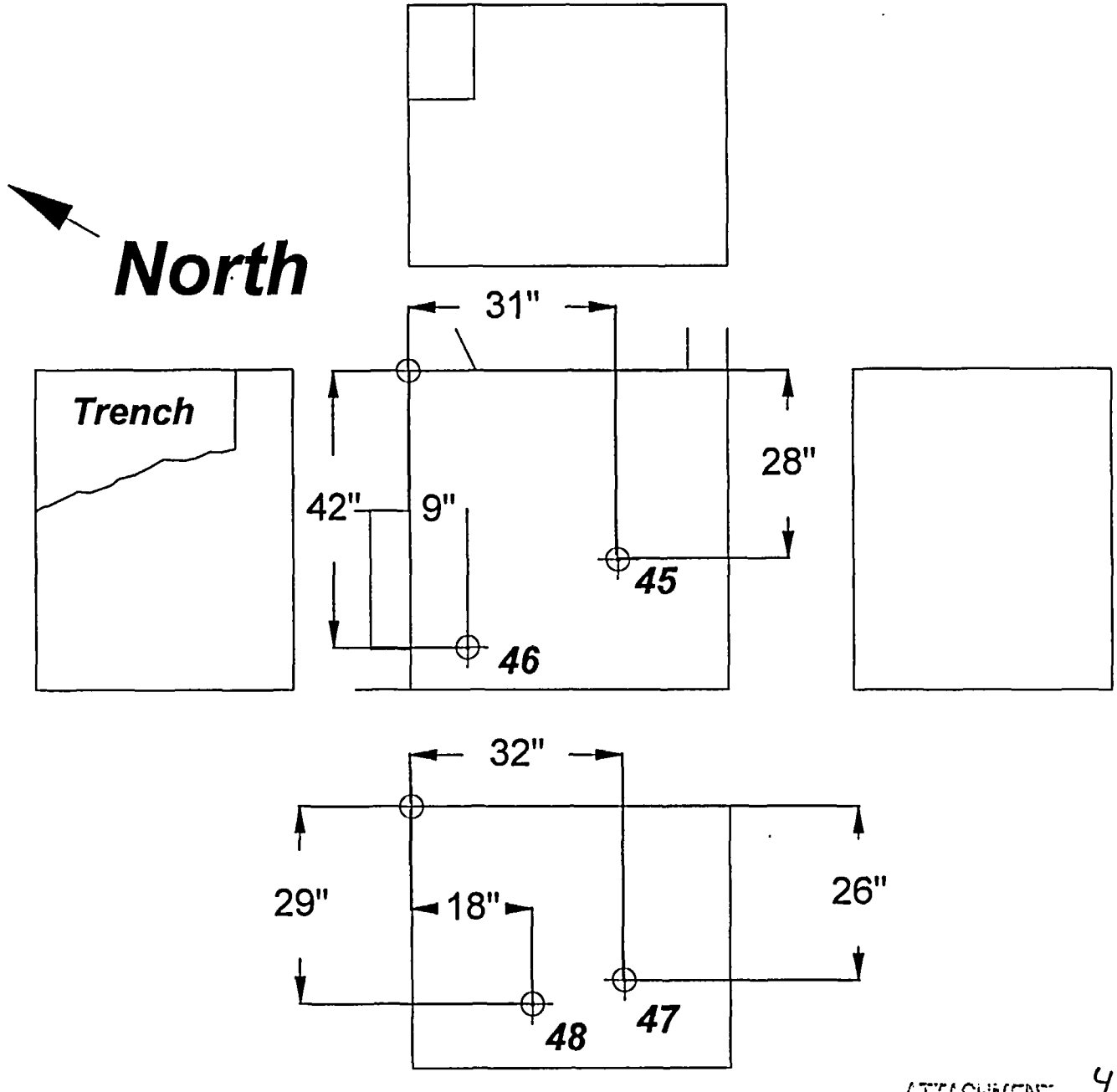

ATTACHMENT 4 12

Page 55 of 76
E906-03-025

NE SUMP VSP OUTPUT

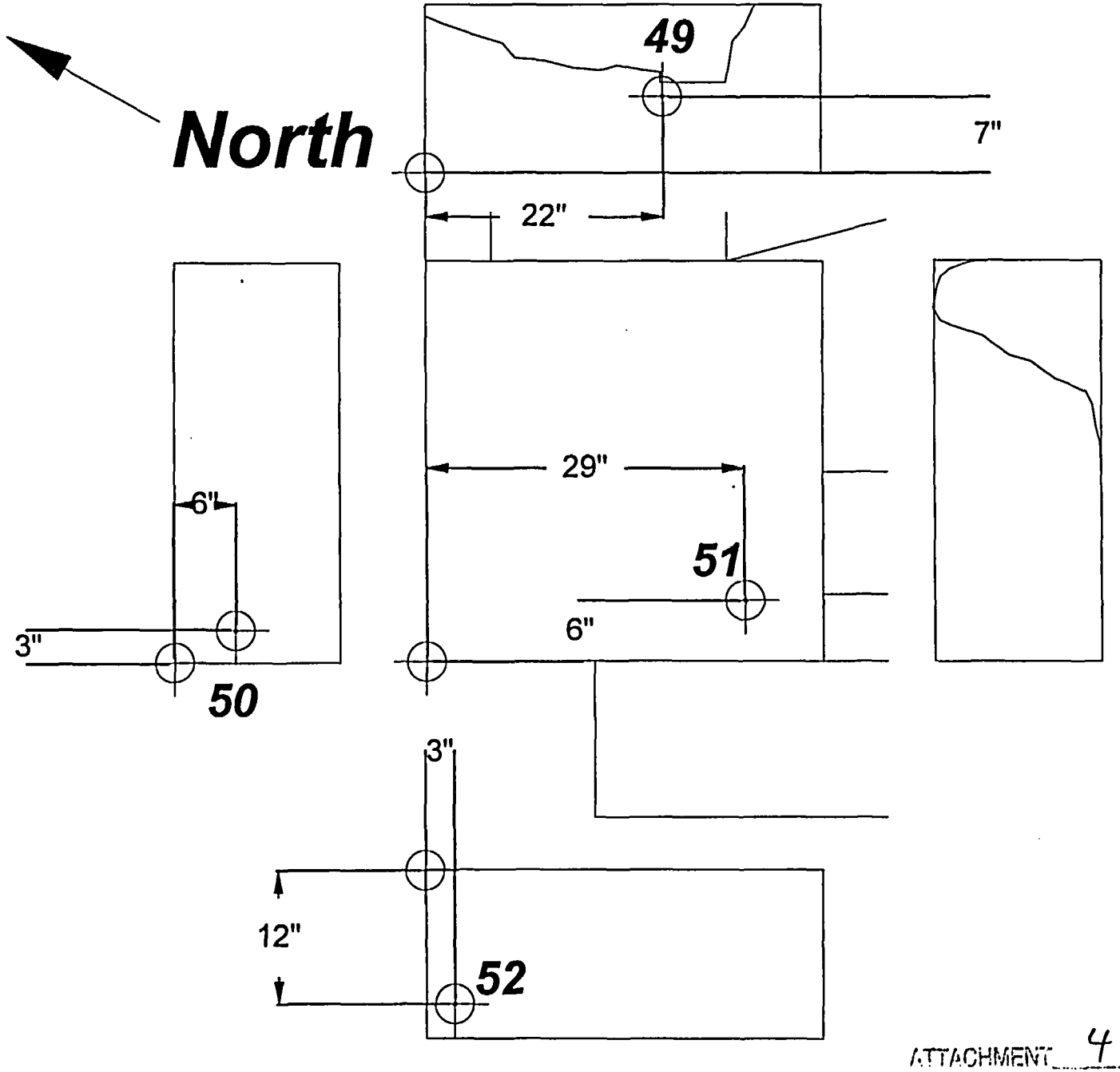

ATTACHMENT 4 - 13

Page 56 of 76
EG00-03-025

ORIGINAL

GFPC Radiation Measurement Instrument Calibration Worksheet

Performed By:	R. J. Reheard	Date:	6/24/03
Instrument S/N:	126218	Probe S/N:	95080
Instrument Vendor Cal. Date:	12/20/03	Cal. Due Date:	12/20/03

Source No.	ISO 7503-1 Values "Ea"	Reference Date	As in µCi (± 6%)	2π β or α Emission Rate (sec-1) (± 3%)	
Am-241 (GO 535) S-023	0.25	4/8/99 12:00 GMT	4.24E-01	7.43E+03	☐ Am-241
Cs-137 (GO 536) S-024	0.50	4/8/99 12:00 GMT	3.11E-01	6.89E+03	☑ Cs-137

Source Radionuclide	Decay Date
Cs-137	6/24/03

Decay Factor⇒	9.075E-01	Elapsed Time (days)⇒	1538
		Activity (µCi)⇒	2.821E-01
		Source dpm⇒	6.262E+05
		Source dpm/in Probe Area (cm^2)⇒	5.260E+05
		2π Emission Rate (sec-1)⇒	6.253E+03
		2π Emission Rate (min-1)⇒	3.752E+05
		2π Emission Rate in Probe Area (min-1)⇒	3.151E+05

Probe Area (cm^2)
126

Record of 1 Minute Source & Background Counting Results

☑ Check if using ISO 7503-1 Value

No.	OW Source Gross CPM	OW Background CPM	OW Source Net CPM
1	1.48E+05	181	1.483E+05
2	1.49E+05	203	1.490E+05
3	1.50E+05	186	1.499E+05
4	1.50E+05	193	1.502E+05
5	1.51E+05	182	1.507E+05
6	1.51E+05	164	1.508E+05
7	1.52E+05	170	1.515E+05
8	1.51E+05	177	1.513E+05
9	1.52E+05	161	1.520E+05
10	1.52E+05	162	1.515E+05
Mean⇒		177.9	1.505E+05

RESULTS
Counts/Emission (εi)
47.8%
2π Emission/Disintigration (εs)
50.0%
Counts/Disintigration (εt)
23.9%

Approved: J Duskin

Date: 6/25/03

Calibration Calculation Sheet Verification Date⇒	December-02
B. Brosey/P. Donnachie⇒	December-02

ATTACHMENT 5.1

Page 57 of 76
E900-03-025

	T 1/2 (d)	T 1/2 (d)	T 1/2 (d)	T 1/2 (d)	T 1/2 (d)	T 1/2 (d)
	157861.05	1925.23275	11019.5925	32050.6875	8813847.75	10446.15
	Am-241	Co-60	Cs-137	Pu-238	Pu-239	Sr-90
Location/Description	Am-241	Co-60	Cs-137	Pu-238	Pu-239	Sr-90
SSGS Footprint AV-134, 0'-3', Well #2	0.0995	0.0327	1.3931	0.0014	0.0060	0.0277
Sediment Phase - SSGS East Sump @ 25', AV183, Well #1	0.0875	1.9646	78.9405	0.0292	0.0400	
SSGS Footprint AT-139 @ 6'	0.0199	0.0328	0.2508	0.0068	0.0050	0.0185
SSGS Footprint AT-139, 9'-12', Well #4	0.0199	0.0328	0.3065	0.0015	0.0050	0.0167
SSGS Footprint AW-132 @ 21', Well #3	0.0090	0.0262	0.4365	0.0019	0.0060	0.0278
SSGS Footprint West Turbine Sump Area AV-134 (Pumped)	0.1294	0.1329	6.2384	0.0068	0.0120	0.0185
SSGS Footprint East Turbine Sump Area AV-133 (Pumped)	0.1990	0.2459	91.0626	0.1952	0.2000	0.0556
SSGS Footprint Collection Tank Area AW-132 (Pumped)	0.0398	0.1330	5.1214	0.0146	0.0160	0.0186
SSGS Footprint, Well # 7 Pumped Sediment	0.0697	1.0260	72.0571	0.2932	0.1700	
SSGS North Sump	0.0040	0.0510	2.4127	0.0039	0.0030	0.0094
SSGS SE Sump, AU-133, SR-0003	0.0139	0.3941	150.4871	0.0029	0.0040	0.0189
SSGS South East Sump Sediment AV-133	0.0889	0.3847	84.0773	0.0647	0.0381	0.1473
SSGS Mezzanine, East, SR-0004	0.7064	1.6667	37.5482	0.3240	0.3300	0.1702
SSGS North Sump Penetration - 4" Pipe	0.0528	0.2091	4.1717	0.0098	0.0040	0.0474
SSGS, East, Disk # 1	0.2890	1.5060	627.5376	0.0452	0.1450	0.0474
SSGS Footprint, East, SR-0004, NW Sump	0.1356	0.1077	11.0809	0.0030	0.0030	0.0858
SSGS Footprint, Center Section, Core Bore # 2, Disk # 1, Building Structure	0.0478	0.0308	0.2580	0.0482	0.0490	0.0572
SSGS 790' El., East - Debris From Pump Stand Small Pipe	0.1097	3.1170	2999.1594	0.0690	0.0800	0.0382
SSGS 4" Cross Over Line - Sump to Sump - 790' El.	0.0670	0.3719	111.1883	0.1442	0.0875	0.1386
SSGS Footprint Sample # 5, Concrete Floor Core - SR-56, Building Structure	0.1320	0.0569	3.7134	0.1158	0.0386	0.0168
Mean⇒	***1.16E-01***	***5.76E-01***	***2.14E+02***	***6.91E-02***	***6.21E-02***	***5.34E-02***
% of Total⇒	***0.054%***	***0.268%***	***99.593%***	***0.032%***	***0.029%***	***0.025%***
Median⇒	7.86E-02	1.71E-01	8.66E+00	2.19E-02	2.70E-02	3.30E-02
Sigma⇒	1.56E-01	8.47E-01	6.70E+02	9.80E-02	8.68E-02	4.96E-02
2 Sigma + Mean⇒	4.27E-01	2.27E+00	1.55E+03	2.65E-01	2.36E-01	1.53E-01

Page 58 of 76
EGW-03-025

Effective DCGL Calculator for Cs-137 (dpm/100 cm^2)

Gross Activity DCGLw		Gross Activity Administrative Limit	
17498	dpm/100 cm^2	13124	dpm/100 cm^2

25.0 mrem/y TEDE Limit

SAMPLE NO(s)⇒ SSGS Footprint Samples

Cs-137 Limit		Cs-137 Administrative Limit	
17461	dpm/100 cm^2	13095	dpm/100 cm^2

SNEC AL	75%

	Isotope	Sample Input (pCi/g, uCi, etc.)	% of Total	Individual Limits (dpm/100 cm^2)	Allowed dpm/100 cm^2	mrem/y TEDE	Beta dpm/100 cm^2	Alpha dpm/100 cm^2	
1	Am-241	4.27E-01	0.027%	27	4.81	4.45	N/A	4.81	Am-241
2	C-14		0.000%	3,700,000	0.00	0.00	0.00	N/A	C-14
3	Co-60	2.27E+00	0.146%	7,100	25.57	0.09	25.57	N/A	Co-60
4	Cs-137	1.55E+03	99.784%	28,000	17460.62	15.59	17460.6	N/A	Cs-137
5	Eu-152		0.000%	13,000	0.00	0.00	0.00	N/A	Eu-152
6	H-3		0.000%	120,000,000	0.00	0.00	Not Detectable	N/A	H-3
7	Ni-63		0.000%	1,800,000	0.00	0.00	Not Detectable	N/A	Ni-63
8	Pu-238	2.65E-01	0.017%	30	2.99	2.49	N/A	2.99	Pu-238
9	Pu-239	2.36E-01	0.015%	28	2.66	2.37	N/A	2.66	Pu-239
10	Pu-241		0.000%	880	0.00	0.00	Not Detectable	N/A	Pu-241
11	Sr-90	1.53E-01	0.010%	8,700	1.72	0.00	1.72	N/A	Sr-90
			100.000%		17498	25.0	17488	10	
					Maximum Permissible dpm/100 cm^2				

ATTACHMENT 6 . 2

Page 59 of 76
E900-03-025

Effective DCGL Calculator for Cs-137 (in pCi/g)

SNEC AL	75%	Total Activity Limit DCGLw		Administrative Limit	
		6.58	pCi/g	4.94	pCi/g

SAMPLE NUMBER(s)⇒ SSGS Footprint Samples

Cs-137 Limit		Cs-137 Administrative Limit	
6.57	pCi/g	4.93	pCi/g

23596.24%	25.0	mrem/y TEDE Limit
565.88%	4.0	mrem/y Drinking Water (DW) Limit

☑ Check for 25 mrem/y

	Isotope	Sample Input (pCi/g, uCi, etc.)	% of Total	25 mrem/y TEDE Limits (pCi/g)	4 mrem/y DW Limits (pCi/g)	A - Allowed pCi/g for 25 mrem/y TEDE	B - Allowed pCi/g for 4 mrem/y DW	Value Checked from Column A or B	This Sample mrem/y TEDE	This Sample mrem/y DW	
1	Am-241	0.427	0.027%	9.9	2.3	0.00	0.08	0.00	1.08	0.74	Am-241
2	C-14		0.000%	2.0	5.4	0.00	0.00	0.00	0.00	0.00	C-14
3	Co-60	2.270	0.146%	3.5	67.0	0.01	0.40	0.01	16.21	0.14	Co-60
4	Cs-137	1550.00	99.784%	6.6	397	6.57	273.91	6.57	5871.21	15.62	Cs-137
5	Eu-152		0.000%	10.1	1440	0.00	0.00	0.00	0.00	0.00	Eu-152
6	H-3		0.000%	132	731.1	0.00	0.00	0.00	0.00	0.00	H-3
7	Ni-63		0.000%	747	19000	0.00	0.00	0.00	0.00	0.00	Ni-63
8	Pu-238	0.265	0.017%	1.8	0.41	0.00	0.05	0.00	3.68	2.59	Pu-238
9	Pu-239	0.236	0.015%	1.6	0.37	0.00	0.04	0.00	3.69	2.55	Pu-239
10	Pu-241		0.000%	86	19.8	0.00	0.00	0.00	0.00	0.00	Pu-241
11	Sr-90	0.153	0.010%	1.2	0.61	0.00	0.03	0.00	3.19	1.00	Sr-90
		1.55E+03	100.000%			6.58	274.50	6.58	5899.060	22.635	
						Maximum Permissible pCi/g (25 mrem/y)	Maximum Permissible pCi/g (4 mrem/y)		To Use This Information, Sample Input Units Must Be In pCi/g		

ATTACHMENT 6 - 3

Page 60 of 76
E90-03-025

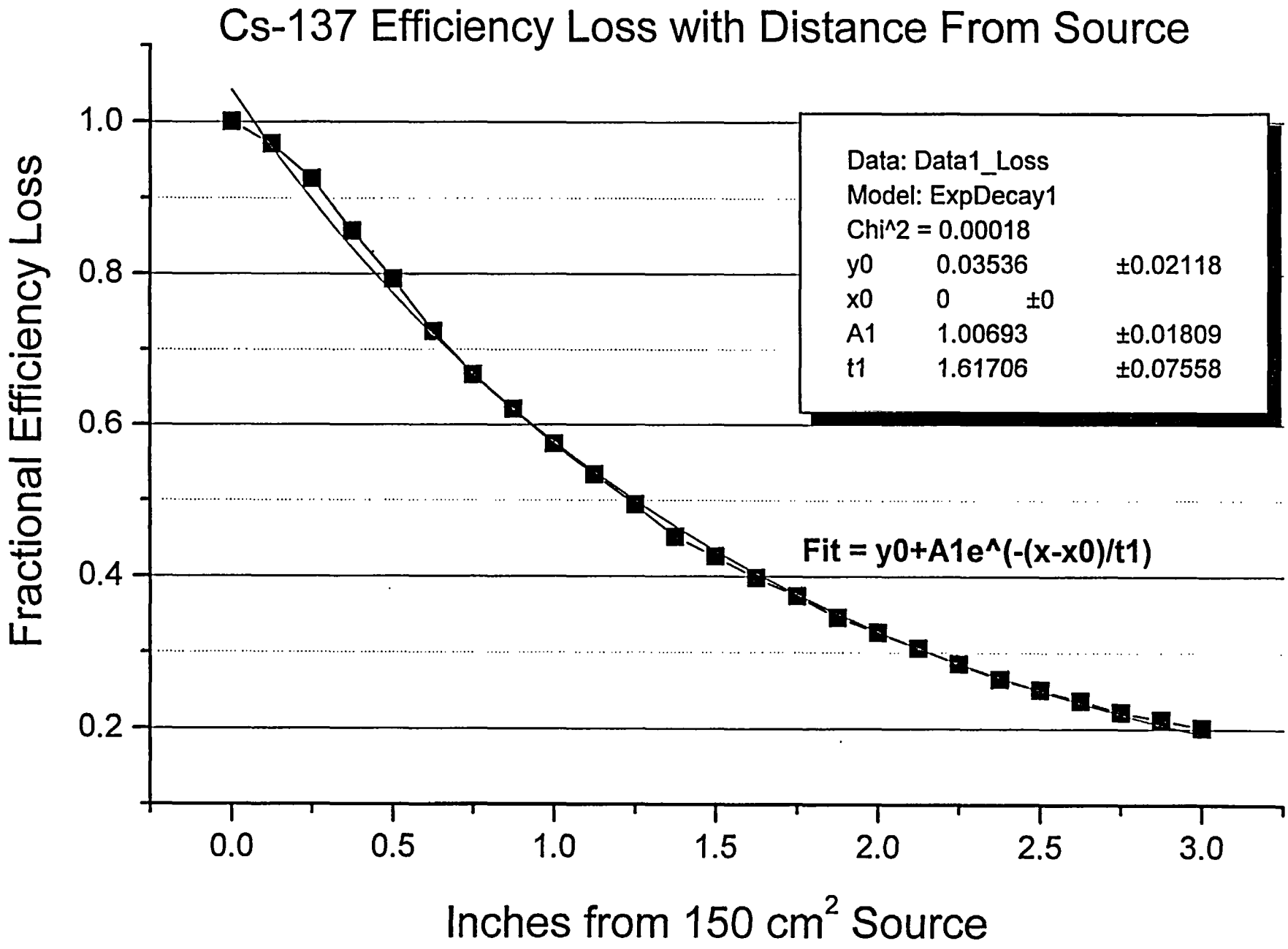

ATTACHMENT 7.1

Page 61 of 76
E980-03-025

Page 62 of 76
E900-03-025

LUDLUM MODEL 44-10 HIGH VOLTAGE PLATEAU DATA SHEET
(Detector peaked using Cs137 #019454 5uCi button)

Serial Number: 196021

HIGH VOLTAGE	SOURCE (10 second count)
700	37,380
701	39,576
702	40,089
703	41,493
704	42,325
705	42,859
706	42,756
707	41,336
708	40,700
709	N/A
710	N/A
711	N/A

Detector Parameters for Peaking		
Parameter	Setting	Comments
Threshold (10mV/100)	612	Peaked for Cs^{137} at 662keV
Window (On)	100	
High Voltage	705	
CPM/mR	221,028	

FWHM values performed with Threshold = 642 and Window = 40	
FWHM = $\frac{685 - 605}{662} \times 100\%$	12.1%

Detector peaked for Cs^{137} using Ludlum peaking procedure and threshold setting of 612 and window setting of 100 as requested by John Duskin. 2350-1 #117566 calibration due 01/22/04 used for peaking 44-10 detector.

Performed By: [signature] **Date:** 7/22/03

Reviewed By: [signature] **Date:** 9-18-03

ATTACHMENT 8 - 1

MicroShield v5.05 (5.05-00121)
GPU Nuclear

E900-03-025

Page : 1
DOS File : Case1
Run Date : October 6, 2003
Run Time : 4:44:06 PM
Duration : 00:00:23

File Ref: _____
Date: _____
By: _____
Checked: _____

Case Title: Model 1
Description: Source Region in SSGS Area
Geometry: 13 - Rectangular Volume

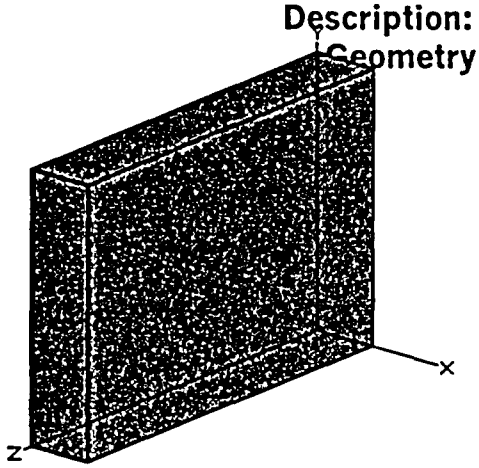

Source Dimensions

Length	7.62 cm	3.0 in
Width	45.72 cm	1 ft 6.0 in
Height	30.48 cm	1 ft

Dose Points

	X	Y	Z
# 1	15.24 cm	15.24 cm	22.86 cm
	6.0 in	6.0 in	9.0 in

Shields

Shield Name	Dimension	Material	Density
Source	648.0 in³	Concrete	1.6
Air Gap		Air	0.00122

Source Input
Grouping Method : Actual Photon Energies

Nuclide	curies	becquerels	µCi/cm³	Bq/cm³
Ba-137m	1.6073e-008	5.9469e+002	1.5136e-006	5.6003e-002
Cs-137	1.6990e-008	6.2863e+002	1.6000e-006	5.9200e-002

Buildup
The material reference is : Source

Integration Parameters

X Direction	40
Y Direction	40
Z Direction	40

Results

Energy MeV	Activity photons/sec	Fluence Rate MeV/cm²/sec No Buildup	Fluence Rate MeV/cm²/sec With Buildup	Exposure Rate mR/hr No Buildup	Exposure Rate mR/hr With Buildup
0.0318	1.231e+01	7.432e-06	8.988e-06	6.190e-08	7.487e-08

ATTACHMENT 9 . 1

Page : 2
DOS File : Case1
Run Date : October 6, 2003
Run Time : 4:44:06 PM
Duration : 00:00:23

Page 64 of 76
E900-03-025

Energy MeV	Activity photons/sec	Fluence Rate MeV/cm²/sec No Buildup	Fluence Rate MeV/cm²/sec With Buildup	Exposure Rate mR/hr No Buildup	Exposure Rate mR/hr With Buildup
0.0322	2.272e+01	1.429e-05	1.739e-05	1.150e-07	1.399e-07
0.0364	8.266e+00	7.902e-06	1.031e-05	4.489e-08	5.855e-08
0.6616	5.351e+02	5.499e-02	8.246e-02	1.066e-04	1.599e-04
TOTALS:	5.784e+02	5.502e-02	8.250e-02	1.068e-04	1.601e-04

ATTACHMENT 9.2

MicroShield v5.05 (5.05-00121)
GPU Nuclear

Page 65 of 76

E900-03-025

Page : 1
DOS File : MODEL2.MS5
Run Date : October 6, 2003
Run Time : 4:51:33 PM
Duration : 00:00:23

File Ref: _____
Date: _____
By: _____
Checked: _____

Case Title: Model 2
Description: Source Region in SSGS Area
Geometry: 13 - Rectangular Volume

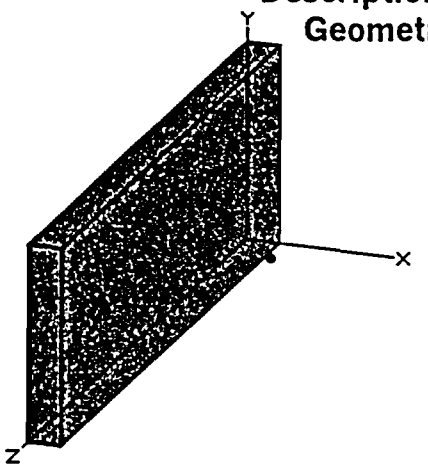

Source Dimensions

Length	2.54 cm	1.0 in
Width	45.72 cm	1 ft 6.0 in
Height	15.24 cm	6.0 in

Dose Points

	X	Y	Z
# 1	10.16 cm	7.62 cm	22.86 cm
	4.0 in	3.0 in	9.0 in

Shields

Shield Name	Dimension	Material	Density
Source	108.0 in³	Concrete	2.35
Air Gap		Air	0.00122

Source Input
Grouping Method : Actual Photon Energies

Nuclide	curies	becquerels	µCi/cm³	Bq/cm³
Ba-137m	3.9344e-009	1.4557e+002	2.2231e-006	8.2255e-002
Cs-137	4.1590e-009	1.5388e+002	2.3500e-006	8.6950e-002

Buildup
The material reference is : Source

Integration Parameters

X Direction	40
Y Direction	40
Z Direction	40

Results

Energy MeV	Activity photons/sec	Fluence Rate MeV/cm²/sec No Buildup	Fluence Rate MeV/cm²/sec With Buildup	Exposure Rate mR/hr No Buildup	Exposure Rate mR/hr With Buildup
0.0318	3.014e+00	5.348e-06	6.461e-06	4.455e-08	5.382e-08
0.0322	5.561e+00	1.028e-05	1.249e-05	8.273e-08	1.005e-07

ATTACHMENT 9 - 3

DOS File : MODEL2.MS5
Run Date : October 6, 2003
Run Time: 4:51:33 PM
Duration : 00:00:23

Energy MeV	Activity photons/sec	Fluence Rate MeV/cm²/sec No Buildup	Fluence Rate MeV/cm²/sec With Buildup	Exposure Rate mR/hr No Buildup	Exposure Rate mR/hr With Buildup
0.0364	2.023e+00	5.646e-06	7.336e-06	3.208e-08	4.168e-08
0.6616	1.310e+02	2.670e-02	3.400e-02	5.176e-05	6.591e-05
TOTALS:	1.416e+02	2.672e-02	3.402e-02	5.192e-05	6.611e-05

NaI Scan MDC Calculation

$b = 100$ $p = 0.5$ $HS_d = 45.72$ $SR = 10$ $d = 1.38$

$Conv = 221$ $MS_{output} = 6.611 \cdot 10^{-5}$

$\frac{HS_d}{SR} = 4.572$ *Observation Interval (seconds)*

$O_i := \frac{HS_d}{SR}$ *Observation Interval (seconds)*

$b_i := \frac{(b \cdot O_i)}{60}$

$MDCR_i := \left(d \cdot \sqrt{b_i}\right) \cdot \frac{60}{O_i}$

$MDCR_i = 49.992$ *net counts per minute*

$MDCR_{surveyor} := \frac{MDCR_i}{\sqrt{p}}$

$MDCR_{surveyor} = 70.7$ *net counts per minute*

$MDER := \frac{MDCR_{surveyor}}{Conv}$

$MDER = 0.32$ µR/h

$MDC_{scan} := \frac{MDER}{MS_{output} \cdot 1 \cdot 10^3}$

$MDC_{scan} = 4.839$ pCi/g

NaI Scan MDC Calculation

$b := 100$ $p := 0.5$ $HS_d := 45.72$ $SR := 10$ $d := 1.38$

$Conv := 221$ $MS_{output} := 1.601 \cdot 10^{-4}$

$\frac{HS_d}{SR} = 4.572$ *Observation Interval (seconds)*

$O_i := \frac{HS_d}{SR}$ *Observation Interval (seconds)*

$b_i := \frac{(b \cdot O_i)}{60}$

$MDCR_i := \left(d \cdot \sqrt{b_i}\right) \cdot \frac{60}{O_i}$

$MDCR_i = 49.992$ *net counts per minute*

$MDCR_{surveyor} := \frac{MDCR_i}{\sqrt{p}}$

$MDCR_{surveyor} = 70.7$ *net counts per minute*

$MDER := \frac{MDCR_{surveyor}}{Conv}$

$MDER = 0.32$ µR/h

$MDC_{scan} := \frac{MDER}{MS_{output} \cdot 1 \cdot 10^3}$

$MDC_{scan} = 1998$ pCi/g

ATTACHMENT 10.2

where:

b = background in counts per minute

b_i = background counts in observation interval

Conv = NaI manufacturers reported response to energy of contaminant (cpm/uR/h)

d = index of sensitivity (Table 6.5 MARSSIM), 1.38 = 95% of correct detection's, 60% false positives

HS_d = hot spot diameter (in centimeters)

MDC_{scan} = Minimum Detectable Concentration for scanning (pCi/g)

$MDCR_i$ = Minimum Detectable Count Rate (ncpm)

$MDCR_{surveyor}$ = $MDCR_i$ corrected by human performance factor (ncpm)

MDER = Minimum Detectable Exposure Rate (uR/h)

MS_{output} = MicroShield output exposure rate for 1 pCi/g of contaminant (mR/h)

O_i = obervation Interval (seconds)

p = human performance factor

SR = scan rate in centimeters per second

Intake Tunnel Concrete Background Measurements - GFPC

	Instrument 126188	RR9291	Time	Detector	Counts	Count Time (sec)	Mode	Designator			FSS-337	BHB
2	INTAK E 1P	10/2/2003	13:04	1	2.46E+02	60	SCL	Shielded	β		2.46E+02	
3	INTAK E 1U	10/2/2003	13:05	1	3.37E+02	60	SCL	Unshielded	β			3.37E+02
4	INTAK N 1P	10/2/2003	13:06	1	2.35E+02	60	SCL	Shielded	β		2.35E+02	
5	INTAK N 1U	10/2/2003	13:07	1	2.77E+02	60	SCL	Unshielded	β			2.77E+02
6	INTAK XN 1P	10/2/2003	13:09	1	2.85E+02	60	SCL	Shielded	β		2.85E+02	
7	INTAK XN 1U	10/2/2003	13:10	1	4.30E+02	60	SCL	Unshielded	β			4.30E+02
8	INTAK T 1P	10/2/2003	13:12	1	2.49E+02	60	SCL	Shielded	β		2.49E+02	
9	INTAK T 1U	10/2/2003	13:13	1	3.86E+02	60	SCL	Unshielded	β			3.86E+02
10	INTAK S 1P	10/2/2003	13:15	1	2.73E+02	60	SCL	Shielded	β		2.73E+02	
11	INTAK S 1U	10/2/2003	13:16	1	2.95E+02	60	SCL	Unshielded	β			2.95E+02
12	INTAK W 1P	10/2/2003	13:17	1	1.98E+02	60	SCL	Shielded	β		1.98E+02	
13	INTAK W 1U	10/2/2003	13:18	1	2.90E+02	60	SCL	Unshielded	β			2.90E+02
14	INTAK XS 1P	10/2/2003	13:20	1	2.98E+02	60	SCL	Shielded	β		2.98E+02	
15	INTAK XS 1U	10/2/2003	13:21	1	3.65E+02	60	SCL	Unshielded	β			3.65E+02
											Shielded	Unshielded
										Minimum ⇒	**1.98E+02**	**2.77E+02**
										Maximum ⇒	**2.98E+02**	**4.30E+02**
										Mean ⇒	**2.55E+02**	**3.40E+02**
										Sigma ⇒	**3.38E+01**	**5.68E+01**

SSGS Footprint Concrete Variability Measurements

	Instrument 126179	KL3171	Time	Detector	Counts	Count Time (sec)	Mode	Designator		FSS-338	BHB
2	SSGS 1S	10/2/2003	14:18	1	1.94E+02	60	SCL	Shielded	β	1.94E+02	
3	SSGS 1U	10/2/2003	14:19	1	3.09E+02	60	SCL	Unshielded	β		3.09E+02
4	SSGS 2S	10/2/2003	14:21	1	2.29E+02	60	SCL	Shielded	β	2.29E+02	
5	SSGS 2U	10/2/2003	14:22	1	5.23E+02	60	SCL	Unshielded	β		5.23E+02
6	SSGS 3S	10/2/2003	14:23	1	2.13E+02	60	SCL	Shielded	β	2.13E+02	
7	SSGS 3U	10/2/2003	14:25	1	3.34E+02	60	SCL	Unshielded	β		3.34E+02
8	SSGS 4S	10/2/2003	14:26	1	2.37E+02	60	SCL	Shielded	β	2.37E+02	
9	SSGS 4U	10/2/2003	14:28	1	4.64E+02	60	SCL	Unshielded	β		4.64E+02
10	SSGS 5S	10/2/2003	14:30	1	1.81E+02	60	SCL	Shielded	β	1.81E+02	
11	SSGS 5U	10/2/2003	14:31	1	3.13E+02	60	SCL	Unshielded	β		3.13E+02
12	SSGS 6S	10/2/2003	14:33	1	1.87E+02	60	SCL	Shielded	β	1.87E+02	
13	SSGS 6U	10/2/2003	14:34	1	4.06E+02	60	SCL	Unshielded	β		4.06E+02
14	SSGS 7S	10/2/2003	14:36	1	2.44E+02	60	SCL	Shielded	β	2.44E+02	
15	SSGS 7U	10/2/2003	14:37	1	3.68E+02	60	SCL	Unshielded	β		3.68E+02
16	SSGS 8S	10/2/2003	14:39	1	1.71E+02	60	SCL	Shielded	β	1.71E+02	
17	SSGS 8U	10/2/2003	14:40	1	3.22E+02	60	SCL	Unshielded	β		3.22E+02
18	SSGS 9S	10/2/2003	14:42	1	2.26E+02	60	SCL	Shielded	β	2.26E+02	
19	SSGS 9U	10/2/2003	14:43	1	3.12E+02	60	SCL	Unshielded	β		3.12E+02
20	SSGS 10S	10/2/2003	14:44	1	2.16E+02	60	SCL	Shielded	β	2.16E+02	
21	SSGS 10U	10/2/2003	14:46	1	3.21E+02	60	SCL	Unshielded	β		3.21E+02
22	SSGS 11S	10/2/2003	14:48	1	1.28E+02	60	SCL	Shielded	β	1.28E+02	
23	SSGS 11U	10/2/2003	14:50	1	1.99E+02	60	SCL	Unshielded	β		1.99E+02
24	SSGS 12S	10/2/2003	14:52	1	1.99E+02	60	SCL	Shielded	β	1.99E+02	
25	SSGS 12U	10/2/2003	14:54	1	3.26E+02	60	SCL	Unshielded	β		3.26E+02
26	SSGS 13S	10/2/2003	14:55	1	2.53E+02	60	SCL	Shielded	β	2.53E+02	
27	SSGS 13U	10/2/2003	14:56	1	3.67E+02	60	SCL	Unshielded	β		3.67E+02
28	SSGS 14S	10/2/2003	14:58	1	2.36E+02	60	SCL	Shielded	β	2.36E+02	
29	SSGS 14U	10/2/2003	14:59	1	3.86E+02	60	SCL	Unshielded	β		3.86E+02
30	SSGS 15S	10/2/2003	15:01	1	2.21E+02	60	SCL	Shielded	β	2.21E+02	
31	SSGS 15U	10/2/2003	15:02	1	3.55E+02	60	SCL	Unshielded	β		3.55E+02
32	SSGS 16S	10/2/2003	15:04	1	1.89E+02	60	SCL	Shielded	β	1.89E+02	
33	SSGS 16U	10/2/2003	15:05	1	2.48E+02	60	SCL	Unshielded	β		2.48E+02
34	SSGS 17S	10/2/2003	15:07	1	2.38E+02	60	SCL	Shielded	β	2.38E+02	
35	SSGS 17U	10/2/2003	15:08	1	3.69E+02	60	SCL	Unshielded	β		3.69E+02
36	SSGS 18S	10/2/2003	15:10	1	1.93E+02	60	SCL	Shielded	β	1.93E+02	
37	SSGS 18U	10/2/2003	15:11	1	3.52E+02	60	SCL	Unshielded	β		3.52E+02
38	SSGS 19S	10/2/2003	15:12	1	2.37E+02	60	SCL	Shielded	β	2.37E+02	
39	SSGS 19U	10/2/2003	15:14	1	3.13E+02	60	SCL	Unshielded	β		3.13E+02
40	SSGS 20S	10/2/2003	15:16	1	2.49E+02	60	SCL	Shielded	β	2.49E+02	
41	SSGS 20U	10/2/2003	15:17	1	3.40E+02	60	SCL	Unshielded	β		3.40E+02
42	SSGS 21S	10/2/2003	15:19	1	2.17E+02	60	SCL	Shielded	β	2.17E+02	
43	SSGS 21U	10/2/2003	15:20	1	3.26E+02	60	SCL	Unshielded	β		3.26E+02
44	SSGS 22S	10/2/2003	15:21	1	2.21E+02	60	SCL	Shielded	β	2.21E+02	
45	SSGS 22U	10/2/2003	15:23	1	2.75E+02	60	SCL	Unshielded	β		2.75E+02
46	SSGS 23S	10/2/2003	15:24	1	2.07E+02	60	SCL	Shielded	β	2.07E+02	
47	SSGS 23U	10/2/2003	15:26	1	2.93E+02	60	SCL	Unshielded	β		2.93E+02
48	SSGS 24S	10/2/2003	15:27	1	2.16E+02	60	SCL	Shielded	β	2.16E+02	
49	SSGS 24U	10/2/2003	15:29	1	3.12E+02	60	SCL	Unshielded	β		3.12E+02
										Shielded	Unshielded
									Minimum ⇒	**1.28E+02**	**1.99E+02**
									Maximum ⇒	**2.53E+02**	**5.23E+02**
									Mean ⇒	**2.13E+02**	**3.39E+02**
									Sigma ⇒	**2.87E+01**	**6.52E+01**

Intake Tunnel Concrete Background Measurements - NaI

	Instrument 126188	RR9291	Time	Detector	Counts	Count Time (sec)	Mode	Designator		FSS-337
32	INTAK T 1	10/2/2003	13:23	4	5.70E+01	60	SCL	@ 4'''	γ	5.70E+01
33	INTAK E 1	10/2/2003	13:24	4	1.70E+02	60	SCL	@ 4'''	γ	1.70E+02
34	INTAK N 1	10/2/2003	13:26	4	8.60E+01	60	SCL	@ 4'''	γ	8.60E+01
35	INTAK XN 1	10/2/2003	13:27	4	6.30E+01	60	SCL	@ 4'''	γ	6.30E+01
36	INTAK S 1	10/2/2003	13:29	4	1.04E+02	60	SCL	@ 4'''	γ	1.04E+02
37	INTAK W 1	10/2/2003	13:30	4	1.08E+02	60	SCL	@ 4'''	γ	1.08E+02
38	INTAK XS 1	10/2/2003	13:31	4	8.40E+01	60	SCL	@ 4'''	γ	8.40E+01
									Minimum ⇒	5.70E+01
									Maximum ⇒	1.70E+02
									Mean ⇒	9.60E+01
									Sigma ⇒	3.77E+01

ATTACHMENT 12.1

SAXTON NUCLEAR	Saxton Nuclear Experimental Corporation Facility Policy and Procedure Manual	Number E900-03-025 E900-IMP-4520.06
Title: Survey Unit Inspection in Support of FSS Design		Revision No. 0

EXHIBIT 1

Survey Unit Inspection Check Sheet

SECTION 1 - SURVEY UNIT INSPECTION DESCRIPTION

Survey Unit #	SS14-6	Survey Unit Location	SSGS FOOTPRINT TROUGH/SUMPS
Date 10/1/03	Time 1530	Inspection Team Members	JDUSKIN

SECTION 2 - SURVEY UNIT INSPECTION SCOPE

Inspection Requirements (Check the appropriate Yes/No answer.)	Yes	No	N/A
1. Have sufficient surveys (i.e., post remediation, characterization, etc.) been obtained for the survey unit?	✓		
2. Do the surveys (from Question 1) demonstrate that the survey unit will most likely pass the FSS?	✓		
3. Is the physical work (i.e., remediation & housekeeping) in or around the survey unit complete?	✓		
4. Have all tools, non-permanent equipment, and material not needed to perform the FSS been removed?	✓		
5. Are the survey surfaces relatively free of loose debris (i.e., dirt, concrete dust, metal filings, etc.)?	✓		
6. Are the survey surfaces relatively free of liquids (i.e., water, moisture, oil, etc.)? (1)		✓	
7. Are the survey surfaces free of all paint, which has the potential to shield radiation?	✓		
8. Have the Surface Measurement Test Areas (SMTA) been established? (Refer to Exhibit 2 for instructions.)	✓		
9. Have the Surface Measurement Test Areas (SMTA) data been collected? (Refer to Exhibit 2 for instructions.)	✓		
10. Are the survey surfaces easily accessible? (No scaffolding, high reach, etc. is needed to perform the FSS)	✓		
11. Is lighting adequate to perform the FSS?	✓		
12. Is the area industrially safe to perform the FSS? (Evaluate potential fall & trip hazards, confined spaces, etc.)	✓		
13. Have photographs have been taken showing the overall condition of the area?	✓		
14. Have all unsatisfactory conditions been resolved?			

NOTE: If a "No" answer is obtained above, the inspector should immediately correct the problem or initiate corrective actions through the responsible site department, as applicable. Document actions taken and/or justifications in the "Comments" section below. Attach additional sheets as necessary.

Comments: (1) water seeps from ground in some areas of trench. If it rains it will be necessary to remove residual water immediately prior to survey.

Survey Unit Inspector (print/sign)	JDUSKIN / [signature]	Date	10/9/03
Survey Designer (print/sign)	B. BROSEY / B. Brosey	Date	10/9/03

ATTACHMENT 13-1

SAXTON NUCLEAR	Saxton Nuclear Experimental Corporation Facility Policy and Procedure Manual	Number E900-IMP-4520.06
Title: Survey Unit Inspection in Support of FSS Design		Revision No. 0

EXHIBIT 3

Surface Measurement Test Area (SMTA) Data Sheet

SECTION 1 - DESCRIPTION					
SMTA Number	SMTA - SS14-6-4	Survey Unit Number	SS14-6		
SMTA Location	SSGS FOOTPRINT Troughs AND Sumps				
Survey Unit Inspector	JDUSKIN	Date	10/1/03	Time	1400
SECTION 2 - CALIPER INFORMATION & PERSONNEL INVOLVED					
Caliper Manufacturer	MITUTOYO CORP	Caliper Model Number	CD-6" CS		
Caliper Serial Number	0763893	Calibration Due Date (as applicable)	10/03		
Rad Con Technician	NA	Date	NA	Time	NA
Survey Unit Inspector Approval	JDUSKIN	Date	10/1/03		

SECTION 3 - MEASUREMENT RESULTS

SMTA Grid Map & Measurement Results in Units of mm
(Insert Results in White Blocks Below)

1: 21.9	7: 10.5	13: 12.8	19: 10.3	25: 11.7	31: 17.4
2: 0.0	8: 0.1	14: 4.3	20: 1.3	26: 2.6	32: 3.4
3: 35.2	9: 27.4	15: 29.7	21: 17.7	27: 25.4	33: 27.4
4: 11.5	10: 8.9	16: 5.0	22: 14.3	28: 3.0	34: 25.9
5: 25.9	11: 23.7	17: 23.9	23: 22.8	29: 71.7	35: 26.8
6: 17	12: 18	18: 13	24: 19	30: 23	36: 24

Average Measurement 20.0 mm

Comments

Roughness of The SMTA is typical of The SURVEY UNIT SURFACE Roughness

Additional Measurements Required

SS 14-6-001 DEPTH - 77.3mm, (24"x29"x3)
SS 14-6-002 DEPTH - >121 mm, (24"x12")
SS14-6-003 DEPTH - 78mm (21"x30")
SS14-6-004 DEPTH - >121mm (14"x8")
SS14-6-005 DEPTH - 77mm (15"x24"x8")
SS14-6-006 DEPTH - 66mm (10"x100")

ATTACHMENT 13-2

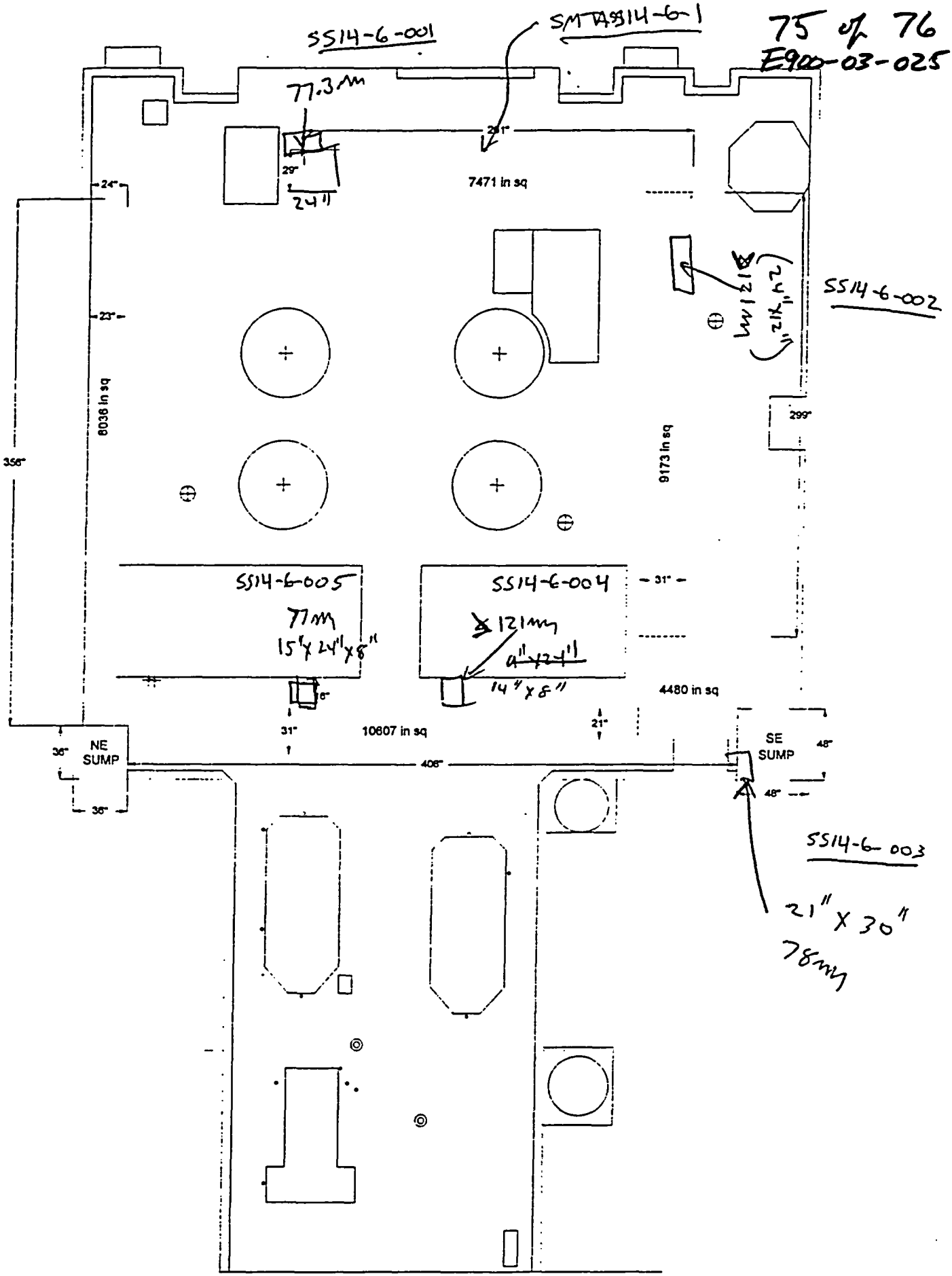

PLAN EL. 790'

ATTACHMENT 13-3

SECTION 7

Plan View = 12494 in sq

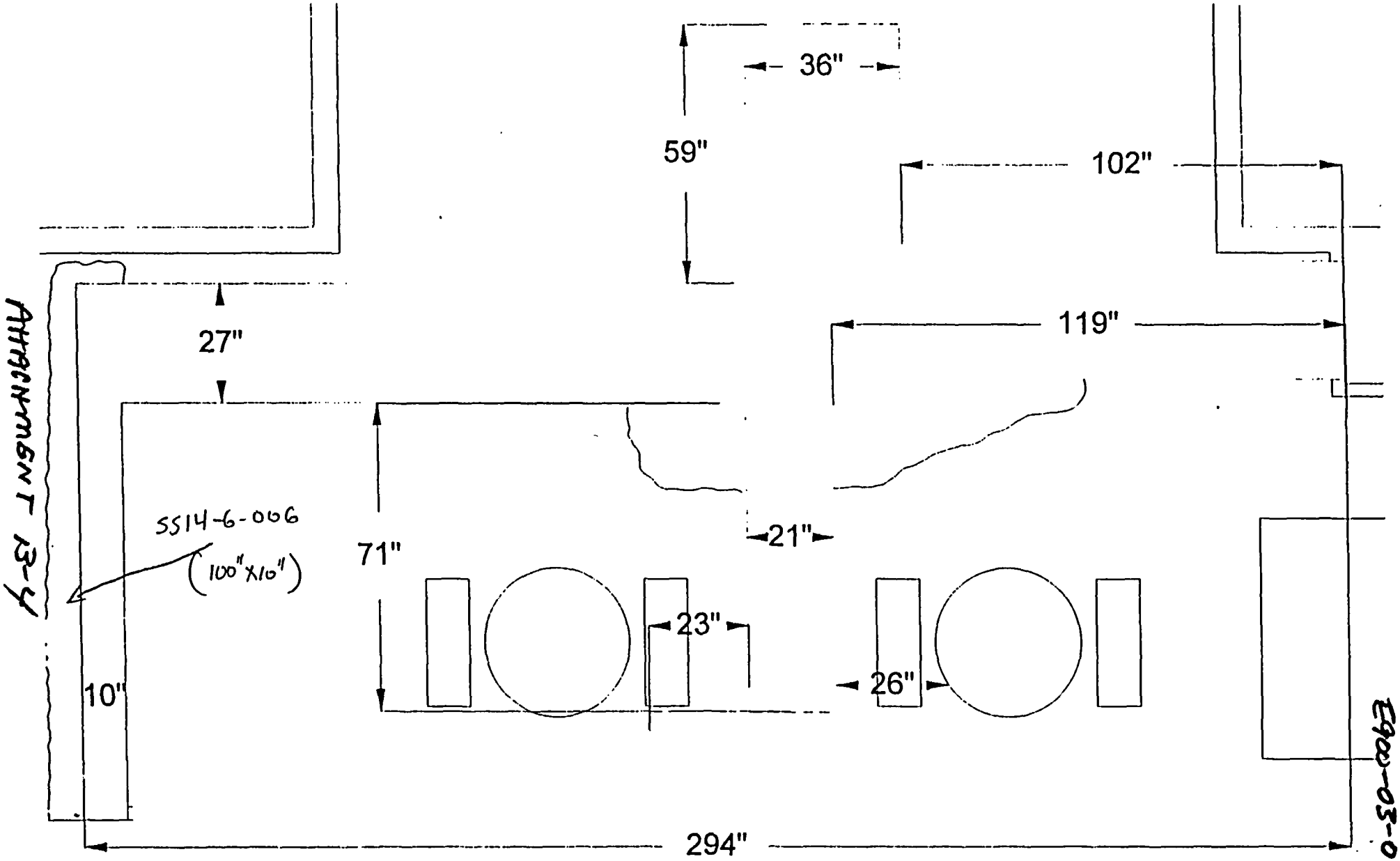

76 of 78
EQ00-03-025