Calvert Cliffs Nuclear Power Plant
Constellation Generation Group, LLC

1650 Calvert Cliffs Parkway
Lusby, Maryland 20657

Constellation Energy

July 14, 2005

U. S. Nuclear Regulatory Commission
Washington, DC 20555

ATTENTION: Document Control Desk

SUBJECT: Calvert Cliffs Nuclear Power Plant
Unit Nos. 1 & 2; Docket Nos. 50-317 & 50-318
2004 Radioactive Effluent Release Report and Offsite Dose Calculation Manual

REFERENCES:
(a) Calvert Cliffs Unit Nos. 1 and 2 Technical Specification 5.6.3
(b) Calvert Cliffs Unit Nos. 1 and 2 Technical Specification 5.5.1

As required by References (a) and (b), Enclosures (1) and (2) are provided. Meteorological data is being kept in our onsite file and is available upon request.

Should you have questions regarding this matter, please contact Mr. L. S. Larragoite at (410) 495-4922.

Very truly yours,

Mark E. Tonacci
General Supervisor - Chemistry

MET/CAN/bjd

Enclosures:
(1) Calvert Cliffs Nuclear Power Plant Effluent and Waste Disposal 2004 Annual Report Supplemental Information
Appendix A Calvert Cliffs Nuclear Power Plant Effluent and Waste Disposal 2004 Annual Report
(2) Offsite Dose Calculation Manual for Calvert Cliffs Nuclear Power Plant, Revision 8

IE48
A009

cc: P. D. Milano, NRC
R. I. McLean, DNR

(Without Enclosures)
S. J. Collins, NRC
Resident Inspector, NRC
C. J. Paperiello, NRC
K. N. Larson, ANI

ENCLOSURE (1)

CALVERT CLIFFS NUCLEAR POWER PLANT

EFFLUENT AND WASTE DISPOSAL

2004 ANNUAL REPORT SUPPLEMENTAL INFORMATION

Calvert Cliffs Nuclear Power Plant, Inc.
July 14, 2005

ENCLOSURE (1)

CALVERT CLIFFS NUCLEAR POWER PLANT
EFFLUENT AND WASTE DISPOSAL 2004 ANNUAL REPORT
SUPPLEMENTAL INFORMATION

Facility - Calvert Cliffs Nuclear Power Plant

Licensee – Calvert Cliffs Nuclear Power Plant, Inc.

I. REGULATORY LIMITS

A. Fission and Activation Gases

1. The instantaneous release rate of noble gases in gaseous effluents shall not result in a site boundary dose rate greater than 500 mRem/year to the whole body or greater than 3000 mRem/year to the skin (Offsite Dose Calculation Manual (ODCM) 3.11.2.1).

2. Gaseous Radwaste Treatment System and the Ventilation Exhaust Treatment System shall be used to reduce gaseous emissions when the calculated gamma-air dose due to gaseous effluents exceeds 1.20 mRad or the calculated beta-air dose due to gaseous effluents exceeds 2.40 mRad at the site boundary in a 92 day period (ODCM 3.11.2.4).

3. The air dose at the site boundary due to noble gases released in gaseous effluents shall not exceed (ODCM 3.11.2.2):

   10 mRad/qtr, gamma-air
   20 mRad/qtr, beta-air
   20 mRad/year, gamma-air
   40 mRad/year, beta-air

4. All of the above parameters are calculated according to the methodology specified in the ODCM.

B. Iodines and Particulates with Half Lives Greater than Eight Days

1. The instantaneous release rate of iodines and particulates in gaseous effluents shall not result in a site boundary dose-rate in excess of 1500 mRem/year to any organ (ODCM 3.11.2.1).

2. The Gaseous Radwaste Treatment System and the Ventilation Exhaust Treatment System shall be used to reduce radioactive materials in gaseous effluents when calculated doses exceed 1.8 mRem to any organ in a 92 day period at or beyond the site boundary (ODCM 3.11.2.4).

3. The dose to a member of the public at or beyond the site boundary from iodine-131 and particulates with half lives greater than eight days in gaseous effluents shall not exceed (ODCM 3.11.2.3):

   15 mRem/qtr, any organ
   30 mRem/year, any organ
   less than 0.1% of the above limits as a result of burning contaminated oil.

4. All of the above parameters are calculated according to the methodology specified in the ODCM.

C. Liquid Effluents

1. The concentrations of radionuclides in liquid effluents from the plant shall not exceed the values specified in 10 CFR Part 20, Appendix B, Table II, Column 2 for unrestricted areas (ODCM 3.11.1.1).

2. The liquid radwaste treatment system shall be used to reduce the concentration of radionuclides in liquid effluents from the plant when the calculated dose to unrestricted areas exceeds 0.36 mRem to the whole body, or 1.20 mRem to any organ in a 92 day period (ODCM 3.11.1.3).

3. The dose to a member of the public in unrestricted areas shall not exceed (ODCM 3.11.1.2):

   3 mRem/qtr, total body
   10 mRem/qtr, any organ
   6 mRem/year, total body
   20 mRem/year, any organ

4. All of the liquid dose parameters are calculated according to the methodology specified in the ODCM.

II. MAXIMUM PERMISSIBLE CONCENTRATIONS

A. Fission and Activation Gases

Prior to the batch release of gaseous effluents, a sample of the source is collected and analyzed by gamma spectroscopy for the principal gamma emitting radionuclides. The identified radionuclide concentrations are evaluated and an acceptable release rate is determined to ensure that the dose rate limits of ODCM 3.11.2.1 are not exceeded.

B. Iodines and Particulates with Half Lives Greater than Eight Days

Compliance with the dose rate limitations for iodines and particulates is demonstrated by analysis of the charcoal and particulate samples of the station main vents. The charcoal samples are analyzed by gamma spectroscopy for quantification of radioiodines. The particulate samples are analyzed by gamma spectroscopy for quantification of particulate radioactive material. All of the above parameters are calculated according to the methodology specified in the ODCM.

C. Liquid Effluents

The Maximum Permissible Concentrations (MPCs) used for radioactive materials released in liquid effluents are in accordance with ODCM 3.11.1.1 and the values from 10 CFR Part 20, Appendix B, Table II, Column 2 including applicable table notes. In all cases, the more restrictive (lower) MPC found for each radionuclide is used regardless of solubility.

III. TECHNICAL SPECIFICATION REPORTING REQUIREMENTS

A. Calvert Cliffs Nuclear Power Plant (CCNPP), Technical Specification 5.6.3

1. 2004 Dose Assessment Summary

	Actual Value	Percent of ODCM limit	ODCM Limit
Liquid Waste:			
Maximum Annual Organ Dose (mRem) [1]	0.005	0.03%	20
Maximum Whole Body Dose (mRem) [1]	0.002	0.03%	6
Gaseous Waste: Noble Gases:			
Maximum Quarterly Gamma Air Dose (mRad)	0.002	0.02%	10
Maximum Quarterly Beta Air Dose (mRad)	0.008	0.02%	20
Iodines and Particulates:			
Maximum Annual Organ Dose (mRem) [2]	0.04	0.2%	30

[1] The controlling pathway was the fish and shellfish pathway with adult as the controlling age group and the gastrointestinal tract representing the organ with the highest calculated dose during the calendar year of 2004.

[2] The controlling pathway was the child-infant-thyroid pathway representing the organ with the highest calculated dose during the calendar year of 2004. There is currently no milk pathway.

2. 40 CFR 190 Total Dose Compliance

Based upon the calendar year 2004 and the ODCM calculations, the maximum exposed individual would receive less than 1% of the allowable dose. During the calendar year 2004, there were no on-site sources of direct radiation that would have contributed to a significant or measurable off-site dose. The direct radiation contribution is measured by both on-site and off-site thermoluminescent dosimeters (TLDs). The results of these measurements did not indicate any statistical increase in the off-site radiation doses attributable to on-site sources. Therefore, no increase in the calculated offsite dose is attributed to the direct exposure from on-site sources. A more detailed evaluation will be reported in the Annual Radiological Environmental Operating Report.

3. Solid Waste Report Requirements

During 2004, the types of radioactive solid waste shipped from Calvert Cliffs were dry compressible waste, dewatered resins, irradiated components, and cartridge filters which were shipped in either High Integrity Containers (HICs) within NRC approved casks, Sealand containers, or steel boxes. Appendix A provides a detailed breakdown of the waste shipments for 2004 per Technical Specification 5.6.3. At CCNPP, methods of waste and materials segregation are used to reduce the volume of solid waste shipped offsite for processing, volume reduction and burial.

4. Offsite Dose Calculation Manual (ODCM) and Process Control Program (PCP) Changes

The ODCM was revised on 17-Aug-2004. A copy is attached. The PCP was not revised in 2004.

B. Radioactive Effluent Monitoring Instrumentation

There were no effluent pathways unmonitored for more than 30 consecutive days in 2004.

C. Independent Spent Fuel Storage Installation (ISFSI), ISFSI Technical Specification 6.1

There was one (1) cask of spent fuel transferred to the ISFSI during 2004. No quantity of radionuclides was released to the environment during the ISFSI operation in 2004. Additional information regarding the ISFSI radiation-monitoring program is included in the Annual Radiological Environmental Operation Report.

IV. AVERAGE ENERGY

Not Applicable.

V. MEASUREMENTS AND APPROXIMATIONS AND TOTAL RADIOACTIVITY

A. Fission and Activation Gases

1. Batch Releases

Prior to each batch release of gas from a pressurized waste gas decay tank or containment, a sample is collected and analyzed by gamma spectroscopy using a germanium detector for the principal gamma emitting noble gas radionuclides. The total activity released is based on the pressure/volume relationship (gas laws).

2. Continuous Releases

A gas sample is collected at least weekly from the main vents and analyzed by gamma spectroscopy using a germanium detector for the principal gamma emitting noble gas radionuclides. The total activity released for the week is based on the total sample activity decay corrected to the sample time multiplied by the main vent flow for the week.

Prior to and after each containment purge, a gas sample is collected and analyzed by gamma spectroscopy using a germanium detector for the principal gamma emitting noble gas radionuclides. The total activity released is based on containment volume and purge rate. Alternatively, total activity released is based on continuous radiation monitor responses, grab samples, and purge fan flow rate.

A monthly composite sample is collected from the main vents and analyzed by liquid scintillation for tritium. The total tritium release for the month is based on the sample analysis and the main vent flow.

B. Iodine and Particulates

1. Batch Releases

The total activities of radioiodines and particulates released from pressurized waste gas decay tanks, containment purges, and containment vents are accounted for by the continuous samplers on the main vent.

2. Continuous Releases

During the release of gas from the main vents, samples of iodines and particulates are collected using a charcoal and particulate filter, respectively. The filters are removed weekly and are analyzed by gamma spectroscopy using a germanium detector for significant gamma emitting radionuclides. The total activity released for the week is based on the total sample activity decay corrected to the midpoint of the sample period multiplied by the main vent flow for the week. The weekly particulate filters are then composited to form monthly and quarterly composites for the gross alpha and strontium-89 and strontium-90 analyses. In the 2nd quarter of 2004, the main vent particulate filters were also analyzed for Fe-55. The Fe-55 analysis was not required but was performed as a result of miscommunication with the vendor laboratory. The laboratory analysis indicated the presence of Fe-55, and that activity is included in this report. The Fe-55 results from the April, May, and June main vent filter papers were averaged, and the average value was reported as Fe-55 for the 3rd and 4th quarter of 2004. Additionally, the quarterly alpha and strontium analyses for the fourth quarter indicate the presence of strontium-90 and alpha activity at very low levels. The levels are very low since the vendor laboratory analyzed the samples to the environmental lower limits of detection.

C. Liquid Effluents

1. Batch Releases

Prior to the release of liquid from a waste tank, a sample is collected and analyzed by gamma spectroscopy for the principal gamma emitting radionuclides. To demonstrate compliance with the requirements addressed in Section I.C.1 above, the measured radionuclide concentrations are compared with the allowable MPCs; dilution in the discharge conduit is considered, and an allowable release rate is verified.

The total activity released in each batch is determined by multiplying the volume released by the concentration of each radionuclide. The actual volume released is based on the difference in tank levels prior to and after the release. A proportional composite sample is also withdrawn from each release, and this is used to prepare monthly tritium and quarterly gross alpha, iron-55, strontium-89, and strontium-90 samples for analysis.

There were major changes to the liquid radwaste system in calendar year 2004. Beginning in February 2003, a vendor supplied advanced radwaste processing system was used for processing water from contaminated areas of the auxiliary and containment buildings. The advanced processing system is comprised of a bank of ultrafilters followed by four ion-exchangers. The advanced radwaste processing system is much more effective in removing radioactive contaminants from liquid

waste. This vendor supplied radwaste processing system continued to be used throughout calendar year 2004. Additionally, in 2004 the Miscellaneous Waste Ion Exchanger, was returned to service to process the liquid waste water before sending it to the vendor supplied radwaste processing system. This provided additional purification capability and protected the vendor supplied system from potential foreign material intrusion.

2. Continuous Releases

To account for activity from continuous releases, a sample is collected and analyzed by gamma spectroscopy for the principal gamma emitting radionuclides. The measured radionuclide concentrations are compared with the allowable MPC concentrations in the discharge conduit, and an allowable release rate is verified.

When steam generator blowdown is discharged to the circulating water conduits, it is sampled and gamma isotopic analysis is performed at a minimum of three times per week and these samples are used in turn to prepare a weekly blowdown composite sample based on each day's blowdown. These results are multiplied by the actual quantity of blowdown to determine the total activity released. The weekly composite is also used to prepare monthly composites for tritium analysis.

During periods of primary-to-secondary leakage, the secondary system becomes contaminated and subsequently, contaminates the turbine building sumps. The low-level activity water (predominantly tritium) contained in the turbine building sumps is discharged to the circulating water conduits. This water is sampled weekly and composited. The composite sample is analyzed at least monthly for tritium and principal gamma emitting radionuclides. The results are multiplied by the actual quantity of liquid released to determine the total activity released.

D. Estimation of Total Error

Total error for all releases was estimated using, as a minimum, the random counting error associated with typical releases. In addition to this random error, the following systematic errors were also examined:

1. Liquid

   a. Error in volume of liquid released prior to dilution during batch releases.
   b. Error in volume of liquid released via steam generator blowdown.
   c. Error in amount of dilution water used during the reporting period.

2. Gases

   a. Error in main vent release flow.
   b. Error in sample flow rate.
   c. Error in containment purge release flow.
   d. Error in gas decay tank pressure.

Where errors could be estimated they are usually considered additive.

VI. BATCH RELEASES

	2004			
	1ST QUARTER	2ND QUARTER	3RD QUARTER	4TH QUARTER
A. Liquid				
1. Number of batch releases	1.70E+01	1.80E+01	1.60E+01	1.10E+01
2. Total time period for batch releases (min)	7.36E+03	6.87E+03	5.81E+03	4.49E+03
3. Maximum time period for a batch release (min)	6.37E+02	6.32E+02	6.06E+02	6.35E+02
4. Average time period for batch releases (min)	4.33E+02	3.82E+02	3.63E+02	4.08E+02
5. Minimum time period for a batch release (min)	2.50E+01	2.60E+01	2.70E+01	3.00E+01
6. Average stream flow during periods of effluent into a flowing stream (liters/min of dilution water)	4.62E+06	4.62E+06	4.62E+06	4.55E+06
B. Gaseous				
1. Number of batch releases	8.00E+00	1.40E+01	2.00E+00	2.00E+00
2. Total time period for batch releases (min)	6.55E+03	5.31E+03	6.17E-01	1.53E+02
3. Maximum time period for a batch release (min)	1.91E+03	1.48E+03	3.67E-01	1.06E+02
4. Average time period for batch release (min)	8.19E+02	3.79E+02	3.08E-01	7.65E+01
5. Minimum time period for a batch release (min)	3.00E+00	2.00E+00	2.50E-01	4.70E+01

VII. ABNORMAL RELEASES

	2004			
	1ST QUARTER	2ND QUARTER	3RD QUARTER	4TH QUARTER
A. Liquid				
1. Number of releases	- 0 -	- 0 -	- 0 -	- 0 -
2. Total activity released (Curies)	- 0 -	- 0 -	- 0 -	- 0 -
B. Gaseous				
1. Number of releases	- 0 -	- 0 -	- 0 -	- 0 -
2. Total activity releases (Curies)	- 0 -	- 0 -	- 0 -	- 0 -

TABLE 1A - REG GUIDE 1.21
GASEOUS EFFLUENTS - SUMMATION OF ALL RELEASES

A. FISSION AND ACTIVATION GASES	UNITS	1ST QUARTER	2ND QUARTER	EST. TOTAL ERROR, %
1. Total Release	Ci	4.52E+01	8.46E+01	±1.20E+01
2. Average release rate for period	µCi/sec	5.75E+00	1.08E+01	
3. Percent of Tech. Spec. limit (1)	%	9.41E-04	1.38E-03	
4. Percent of Tech. Spec. limit (2)	%	3.81E-04	7.76E-04	
5. Percent of Tech. Spec. limit (3)	%	1.36E-02	2.00E-02	
6. Percent of Tech. Spec. limit (4)	%	6.82E-03	1.00E-02	
7. Percent of Tech. Spec. limit (5)	%	1.82E-02	3.87E-02	
8. Percent of Tech. Spec. limit (6)	%	9.12E-03	1.94E-02	
B. IODINES				
1. Total Iodine - 131	Ci	1.30E-04	1.29E-03	±6.50E+00
2. Average release rate for period	µCi/sec	1.65E-05	1.64E-04	
3. Percent of Tech. Spec. limit (7)	%	3.92E-05	3.90E-04	
4. Percent of Tech. Spec. limit (8)	%	9.76E-04	9.72E-03	
5. Percent of Tech. Spec. limit (9)	%	4.88E-04	4.86E-03	
C. PARTICULATES				
1. Particulates with half lives greater than 8 days	Ci	(10)	9.85E-05	±1.20E+01
2. Average release rate for period	µCi/sec	(10)	1.25E-05	
3. Percent of Tech. Spec. limit (7)	%	(10)	8.93E-10	
4. Percent of Tech. Spec. limit (8)	%	(10)	1.27E-05	
5. Percent of Tech. Spec. limit (9)	%	(10)	6.34E-06	
6. Gross alpha radioactivity	Ci	(10)	(10)	N/A

A. FISSION AND ACTIVATION GASES	UNITS	3RD QUARTER	4TH QUARTER	EST. TOTAL ERROR, %
1. Total Release	Ci	1.17E+01	1.62E+01	±1.20E+01
2. Average release rate for period	µCi/sec	1.47E+00	2.03E+00	
3. Percent of Tech. Spec. limit (1)	%	3.37E-04	5.59E-04	
4. Percent of Tech. Spec. limit (2)	%	1.35E-04	2.11E-04	
5. Percent of Tech. Spec. limit (3)	%	4.80E-03	7.80E-03	
6. Percent of Tech. Spec. limit (4)	%	2.40E-03	3.90E-03	
7. Percent of Tech. Spec. limit (5)	%	5.55E-03	7.52E-03	
8. Percent of Tech. Spec. limit (6)	%	2.78E-03	3.76E-03	
B. IODINES				
1. Total Iodine - 131	Ci	9.57E-05	2.78E-05	±6.50E+00
2. Average release rate for period	µCi/sec	1.20E-05	3.49E-06	
3. Percent of Tech. Spec. limit (7)	%	2.86E-05	8.30E-06	
4. Percent of Tech. Spec. limit (8)	%	7.21E-04	2.09E-04	
5. Percent of Tech. Spec. limit (9)	%	3.60E-04	1.05E-04	
C. PARTICULATES				
1. Particulates with half lives greater than 8 days	Ci	8.25E-05	8.45E-05	±1.20E+01
2. Average release rate for period	µCi/sec	1.04E-05	1.06E-05	
3. Percent of Tech. Spec. limit (7)	%	1.89E-07	1.93E-07	
4. Percent of Tech. Spec. limit (8)	%	4.76E-06	4.87E-06	
5. Percent of Tech. Spec. limit (9)	%	2.38E-06	2.44E-06	
6. Gross alpha radioactivity	Ci	(10)	1.04E-09	±3.00E+01

TABLE 1A - REG GUIDE 1.21
GASEOUS EFFLUENTS - SUMMATION OF ALL RELEASES

D. TRITIUM	UNITS	1ST QUARTER	2ND QUARTER	EST. TOTAL ERROR, %
1. Total Release	Ci	8.84E-01	1.85E+00	±1.32E+01
2. Average release rate for period	μCi/sec	1.12E-01	2.35E-01	

D. TRITIUM	UNITS	3RD QUARTER	4TH QUARTER	EST. TOTAL ERROR, %
1. Total Release	Ci	2.13E+00	1.00E+00	±1.32E+01
2. Average release rate for period	μCi/sec	2.68E-01	1.26E-01	

NOTES TO TABLE 1A

(1) Percent of I.A.1 whole body dose rate limit (500 mRem/year)

(2) Percent of I.A.1 skin dose rate limit (3000 mRem/year)

(3) Percent of I.A.3 quarterly gamma-air dose limit (10 mRad)

(4) Percent of I.A.3 yearly gamma-air dose limit (20 mRad)

(5) Percent of I.A.3 quarterly beta-air dose limit (20 mRad)

(6) Percent of I.A.3 yearly beta-air dose limit (40 mRad)

(7) Percent of I.B.1 organ dose rate limit (1500 mRem/year)

(8) Percent of I.B.3 quarterly organ dose limit (15 mRem)

(9) Percent of I.B.3 yearly organ dose limit (30 mRem)

(10) Less than minimum detectable activity which meets the lower limit of detection (LLD) requirements of ODCM Surveillance Requirement 4.11.2.1.2.

TABLE 1C - REG GUIDE 1.21
GASEOUS EFFLUENTS - GROUND LEVEL RELEASES

			CONTINUOUS MODE		BATCH MODE	
		UNITS	1ST QUARTER	2ND QUARTER	1ST QUARTER	2ND QUARTER
1. FISSION AND ACTIVATION GASES						
Argon	-41	Ci	(2)	4.23E-01	6.06E-03	2.55E-03
Krypton	-85	Ci	(2)	1.26E+01	1.14E+00	8.27E+00
Krypton	-85m	Ci	4.76E-02	6.48E-03	5.46E-04	1.30E-04
Krypton	-87	Ci	(2)	(2)	4.43E-05	2.65E-05
Krypton	-88	Ci	(2)	4.52E-03	2.48E-04	1.31E-04
Xenon	-131m	Ci	(2)	7.41E-01	2.29E-02	7.14E-02
Xenon	-133	Ci	3.97E+01	5.87E+01	1.19E+00	1.19E+00
Xenon	-133m	Ci	5.71E-01	1.17E+00	1.03E-02	2.68E-03
Xenon	-135	Ci	2.47E+00	1.37E+00	1.37E-02	2.38E-03
Xenon	-135m	Ci	(2)	(2)	(2)	1.29E-04
Xenon	-138	Ci	(2)	(2)	(2)	3.07E-10
Total for Period		Ci	4.28E+01	7.51E+01	2.38E+00	9.54E+00
2. HALOGENS						
Iodine	-131	Ci	1.30E-04	1.29E-03	(1)	(1)
Iodine	-133	Ci	4.16E-04	3.70E-04	(1)	(1)
Bromine	-82	Ci	(2)	1.10E-05	(1)	(1)
Total for Period		Ci	5.46E-04	1.67E-03	(1)	(1)

			CONTINUOUS MODE		BATCH MODE	
		UNITS	3RD QUARTER	4TH QUARTER	3RD QUARTER	4TH QUARTER
1. FISSION AND ACTIVATION GASES						
Argon	-41	Ci	(2)	(2)	1.77E-07	(2)
Krypton	-85	Ci	(2)	(2)	(2)	1.08E+00
Krypton	-85m	Ci	(2)	(2)	3.13E-08	(2)
Krypton	-87	Ci	(2)	(2)	1.89E-08	(2)
Krypton	-88	Ci	(2)	(2)	4.88E-08	(2)
Xenon	-131m	Ci	(2)	(2)	(2)	(2)
Xenon	-133	Ci	1.00E+01	1.14E+01	5.53E-07	2.40E-04
Xenon	-133m	Ci	(2)	(2)	1.73E-08	(2)
Xenon	-135	Ci	1.71E+00	3.66E+00	5.31E-07	(2)
Xenon	-135m	Ci	(2)	(2)	4.68E-08	(2)
Xenon	-138	Ci	(2)	(2)	6.84E-09	(2)
Total for Period		Ci	1.17E+01	1.51E+01	1.43E-06	1.08E+00
2. HALOGENS						
Iodine	-131	Ci	9.57E-05	2.78E-05	(1)	(1)
Iodine	-133	Ci	5.03E-04	1.30E-04	(1)	(1)
Bromine	-82	Ci	(2)	(2)	(1)	(1)
Total For Period		Ci	5.98E-04	1.58E-04	(1)	(1)

TABLE 1C - REG GUIDE 1.21
GASEOUS EFFLUENTS - GROUND LEVEL RELEASES

		CONTINUOUS MODE		BATCH MODE	
	UNITS	1ST QUARTER	2ND QUARTER	1ST QUARTER	2ND QUARTER
3. PARTICULATES					
Manganese -54	Ci	(2)	(2)	(1)	(1)
Iron -55	Ci	(2)	8.52E-05	(1)	(1)
Iron -59	Ci	(2)	(2)	(1)	(1)
Cobalt -58	Ci	(2)	1.24E-05	(1)	(1)
Cobalt -60	Ci	(2)	(2)	(1)	(1)
Zinc -65	Ci	(2)	(2)	(1)	(1)
Strontium -89	Ci	(2)	(2)	(1)	(1)
Strontium -90	Ci	(2)	(2)	(1)	(1)
Molybdenum -99	Ci	(2)	(2)	(1)	(1)
Cesium -134	Ci	(2)	(2)	(1)	(1)
Cesium -137	Ci	(2)	(2)	(1)	(1)
Cerium -141	Ci	(2)	(2)	(1)	(1)
Cerium -144	Ci	(2)	(2)	(1)	(1)
Gross Alpha Radioactivity	Ci	(2)	(2)	(1)	(1)
Total For Period	Ci	(2)	9.75E-05	(1)	(1)

		CONTINUOUS MODE		BATCH MODE	
	UNITS	3RD QUARTER	4TH QUARTER	3RD QUARTER	4TH QUARTER
3. PARTICULATES					
Manganese -54	Ci	(2)	(2)	(1)	(1)
Iron -59	Ci	(2)	(2)	(1)	(1)
Iron -55	Ci	8.25E-05	8.45E-05	(1)	(1)
Cobalt -58	Ci	(2)	(2)	(1)	(1)
Cobalt -60	Ci	(2)	(2)	(1)	(1)
Zinc -65	Ci	(2)	(2)	(1)	(1)
Strontium -89	Ci	(2)	(2)	(1)	(1)
Strontium -90	Ci	(2)	4.48E-10	(1)	(1)
Molybdenum -99	Ci	(2)	(2)	(1)	(1)
Cesium -134	Ci	(2)	(2)	(1)	(1)
Cesium -137	Ci	(2)	(2)	(1)	(1)
Cerium -141	Ci	(2)	(2)	(1)	(1)
Cerium -144	Ci	(2)	(2)	(1)	(1)
Gross Alpha Radioactivity	Ci	(2)	1.04E-09	(1)	(1)
Total For Period	Ci	8.25E-05	8.45E-05	(1)	(1)

NOTES TO TABLE 1C

(1) Iodines and particulates in batch releases are accounted for with the main vent continuous samplers when the release is made through the plant main vent.

(2) Less than minimum detectable activity which meets the LLD requirements of ODCM Surveillance Requirement 4.11.2.1.2.

TABLE 2A - REG GUIDE 1.21
LIQUID EFFLUENTS - SUMMATION OF ALL RELEASES

	UNITS	1ST QUARTER	2ND QUARTER	EST. TOTAL ERROR, %
A. FISSION AND ACTIVATION PRODUCTS				
1. Total Release (not including tritium, gases, alpha)	Ci	4.38E-03	7.45E-03	±1.03E+01
2. Average diluted concentration during period	µCi/ml	1.29E-10	2.35E-10	
3. Percent of Tech. Spec. limit (1)	%	1.30E-02	1.26E-02	
4. Percent of Tech. Spec. limit (2)	%	6.50E-03	6.30E-03	
5. Percent of Tech. Spec. limit (3)	%	2.52E-02	9.37E-03	
6. Percent of Tech. Spec. limit (4)	%	1.26E-02	4.68E-03	
B. TRITIUM				
1. Total Release	Ci	7.71E+02	2.03E+02	±1.03E+01
2. Average diluted concentration during period	µCi/ml	1.24E-06	2.17E-07	
3. Percent of applicable limit (5)	%	4.13E-02	7.24E-03	
C. DISSOLVED AND ENTRAINED GASES				
1. Total Release	Ci	2.24E-01	1.11E-01	±1.03E+01
2. Average diluted concentration during period	µCi/ml	6.59E-09	3.60E-09	

	UNITS	3RD QUARTER	4TH QUARTER	EST. TOTAL ERROR, %
A. FISSION AND ACTIVATION PRODUCTS				
1. Total Release (not including tritium, gases, alpha)	Ci	1.42E-02	2.00E-03	±1.03E+01
2. Average diluted concentration during period	µCi/ml	5.28E-10	9.80E-11	
3. Percent of Tech. Spec. limit (1)	%	2.25E-02	4.37E-03	
4. Percent of Tech. Spec. limit (2)	%	1.13E-02	2.19E-03	
5. Percent of Tech. Spec. limit (3)	%	1.98E-02	9.97E-03	
6. Percent of Tech. Spec. limit (4)	%	9.90E-03	4.98E-03	
B. TRITIUM				
1. Total Release	Ci	2.45E+02	2.45E+02	±1.03E+01
2. Average diluted concentration during period	µCi/ml	1.85E-07	2.93E-07	
3. Percent of applicable limit (5)	%	6.16E-03	9.76E-03	
C. DISSOLVED AND ENTRAINED GASES				
1. Total Release	Ci	5.48E-03	1.10E-02	±1.03E+01
2. Average diluted concentration during period	µCi/ml	2.94E-10	5.43E-10	

TABLE 2A - REG GUIDE 1.21
LIQUID EFFLUENTS - SUMMATION OF ALL RELEASES

	UNITS	1ST QUARTER	2ND QUARTER	EST. TOTAL ERROR, %
D. GROSS ALPHA RADIOACTIVITY				
1. Total Release	Ci	(6)	(6)	N/A
E. VOLUME OF WASTE RELEASED (prior to dilution)				
1. Volume processed through radwaste system	liters	3.06E+06	2.85E+06	±1.30E+00
2. Volume low activity from secondary system	liters	1.33E+07	1.68E+08	±1.30E+00
F. VOLUME OF DILUTION WATER USED DURING PERIOD (7)	liters	1.18E+12	1.02E+12	±1.64E+01

	UNITS	3RD QUARTER	4TH QUARTER	EST. TOTAL ERROR, %
D. GROSS ALPHA RADIOACTIVITY				
1. Total Release	Ci	(6)	(6)	N/A
E. VOLUME OF WASTE RELEASED (prior to dilution)				
1. Volume processed through radwaste system	liters	2.34E+06	1.85E+06	±1.30E+00
2. Volume low activity from secondary system	liters	8.24E+07	4.07E+07	±1.30E+00
F. VOLUME OF DILUTION WATER USED DURING PERIOD (7)	liters	1.20E+12	1.20E+12	±1.64E+01

NOTES TO TABLE 2A

(1) Percent of I.C.3 Quarterly Organ Dose Limit (10 mRem) to maximum exposed organ

(2) Percent of I.C.3 Yearly Organ Dose Limit (20 mRem) to maximum exposed organ

(3) Percent of I.C.3 Quarterly Whole Body Dose Limit (3 mRem)

(4) Percent of I.C.3 Yearly Whole Body Dose Limit (6 mRem)

(5) Limit used is 3×10^{-3} μCi/ml

(6) Less than minimum detectable activity which meets the LLD requirements of ODCM Surveillance Requirement 4.11.1.1.1.

(7) Includes dilution water used during continuous discharges.

TABLE 2B - REG GUIDE 1.21
LIQUID EFFLUENTS

		CONTINUOUS MODE		BATCH MODE	
NUCLIDES RELEASED	Units	1ST QUARTER	2ND QUARTER	1ST QUARTER	2ND QUARTER
Beryllium – 7	Ci	(1)	(1)	(1)	(1)
Sodium – 24	Ci	(1)	(1)	(1)	(1)
Chromium - 51	Ci	(1)	(1)	(1)	5.11E-04
Manganese - 54	Ci	(1)	(1)	3.69E-05	6.33E-05
Iron – 55	Ci	(2)	(2)	1.70E-03	1.17E-03
Cobalt – 57	Ci	(1)	(1)	1.62E-05	(1)
Cobalt – 58	Ci	(1)	(1)	4.30E-04	4.25E-03
Iron – 59	Ci	(1)	(1)	(1)	5.35E-06
Cobalt – 60	Ci	(1)	(1)	3.77E-04	4.78E-04
Nickel-63	Ci	(1)	(1)	7.10E-04	4.76E-04
Zinc – 65	Ci	(1)	(1)	(1)	(1)
Strontium - 89	Ci	(1)	(1)	(1)	(1)
Strontium - 90	Ci	(1)	(1)	(1)	(1)
Strontium - 92	Ci	(1)	(1)	(1)	(1)
Niobium - 95	Ci	(1)	(1)	2.47E-05	1.27E-04
Zirconium - 95	Ci	(1)	(1)	5.80E-06	5.84E-05
Niobium - 97	Ci	(1)	(1)	(1)	(1)
Zirconium - 97	Ci	(1)	(1)	(1)	(1)
Molybdenum - 99	Ci	(1)	(1)	(1)	(1)
Technetium - 99m	Ci	(1)	(1)	(1)	(1)
Ruthenium - 103	Ci	(1)	(1)	(1)	(1)
Rhodium - 105	Ci	(1)	(1)	(1)	(1)
Ruthenium - 105	Ci	(1)	(1)	(1)	(1)
Silver - 110m	Ci	(1)	(1)	1.34E-04	(1)
Tin – 113	Ci	(1)	(1)	(1)	(1)
Tin – 117m	Ci	(1)	(1)	1.99E-05	1.21E-05
Antimony - 122	Ci	(1)	(1)	(1)	(1)
Antimony - 124	Ci	(1)	(1)	(1)	(1)
Antimony - 125	Ci	(1)	(1)	3.66E-05	6.76E-06
Tellurium – 125m	Ci	(1)	(1)	(1)	(1)
Tellurium - 132	Ci	(1)	(1)	(1)	(1)
Iodine - 131	Ci	(1)	(1)	1.73E-04	1.02E-04
Iodine - 132	Ci	(1)	(1)	(1)	(1)
Iodine – 133	Ci	(1)	(1)	2.19E-05	(1)
Iodine – 135	Ci	(1)	(1)	(1)	(1)
Cesium – 134	Ci	(1)	(1)	1.73E-04	6.14E-05
Cesium – 136	Ci	(1)	(1)	(1)	(1)
Cesium – 137	Ci	(1)	(1)	5.28E-04	1.27E-04
Barium – 140	Ci	(1)	(1)	(1)	(1)
Lanthanum - 140	Ci	(1)	(1)	(1)	(1)
Cerium – 144	Ci	(1)	(1)	(1)	(1)
Europium – 154	Ci	(1)	(1)	(1)	(1)
Europium – 155	Ci	(1)	(1)	(1)	(1)
Tungsten – 187	Ci	(1)	(1)	(1)	(1)
Total For Period	Ci	(1)	(1)	4.38E-03	7.45E-03

TABLE 2B - REG GUIDE 1.21
LIQUID EFFLUENTS

		CONTINUOUS MODE		BATCH MODE	
NUCLIDES RELEASED	Units	3RD QUARTER	4TH QUARTER	3RD QUARTER	4TH QUARTER
Beryllium - 7	Ci	(1)	(1)	(1)	(1)
Sodium - 24	Ci	(1)	(1)	(1)	(1)
Chromium - 51	Ci	(1)	(1)	1.77E-04	(1)
Manganese - 54	Ci	(1)	(1)	6.98E-05	1.06E-05
Iron – 55	Ci	(2)	(2)	1.09E-02	1.33E-03
Cobalt - 57	Ci	(1)	(1)	(1)	(1)
Cobalt - 58	Ci	(1)	(1)	1.15E-03	6.61E-05
Iron – 59	Ci	(1)	(1)	(1)	(1)
Cobalt - 60	Ci	(1)	(1)	7.30E-04	1.81E-04
Nickel-63	Ci	(1)	(1)	7.24E-04	2.60E-04
Zinc – 65	Ci	(1)	(1)	(1)	(1)
Strontium - 89	Ci	(1)	(1)	(1)	(1)
Strontium - 90	Ci	(1)	(1)	(1)	(1)
Strontium - 92	Ci	(1)	(1)	(1)	(1)
Niobium - 95	Ci	(1)	(1)	1.44E-04	1.05E-05
Zirconium - 95	Ci	(1)	(1)	9.27E-05	1.92E-06
Niobium - 97	Ci	(1)	(1)	(1)	(1)
Zirconium - 97	Ci	(1)	(1)	(1)	(1)
Molybdenum - 99	Ci	(1)	(1)	(1)	(1)
Technetium - 99m	Ci	(1)	(1)	(1)	(1)
Ruthenium - 103	Ci	(1)	(1)	(1)	(1)
Rhodium - 105	Ci	(1)	(1)	(1)	(1)
Ruthenium - 105	Ci	(1)	(1)	(1)	(1)
Silver - 110m	Ci	(1)	(1)	1.31E-04	(1)
Tin – 113	Ci	(1)	(1)	(1)	(1)
Tin – 117m	Ci	(1)	(1)	(1)	(1)
Antimony - 122	Ci	(1)	(1)	(1)	(1)
Antimony - 124	Ci	(1)	(1)	(1)	(1)
Antimony - 125	Ci	(1)	(1)	3.41E-06	9.72E-05
Tellurium – 125m	Ci	(1)	(1)	(1)	(1)
Tellurium - 132	Ci	(1)	(1)	(1)	(1)
Iodine - 131	Ci	(1)	(1)	1.29E-05	5.23E-06
Iodine - 132	Ci	(1)	(1)	(1)	(1)
Iodine - 133	Ci	(1)	(1)	1.16E-05	2.01E-06
Iodine - 135	Ci	(1)	(1)	(1)	(1)
Cesium - 134	Ci	(1)	(1)	3.92E-05	4.87E-06
Cesium - 136	Ci	(1)	(1)	(1)	(1)
Cesium - 137	Ci	(1)	(1)	4.96E-05	2.89E-05
Barium - 140	Ci	(1)	(1)	(1)	(1)
Lanthanum - 140	Ci	(1)	(1)	(1)	(1)
Cerium - 144	Ci	(1)	(1)	(1)	(1)
Europium - 154	Ci	(1)	(1)	(1)	(1)
Europium - 155	Ci	(1)	(1)	(1)	(1)
Tungsten - 187	Ci	(1)	(1)	(1)	(1)
Total For Period	Ci	(1)	(1)	1.42E-02	2.00E-03

TABLE 2B - REG GUIDE 1.21
LIQUID EFFLUENTS

		CONTINUOUS MODE		BATCH MODE	
NUCLIDES RELEASED	Units	1ST QUARTER	2ND QUARTER	1ST QUARTER	2ND QUARTER
Krypton – 85	Ci	(1)	(1)	8.81E-03	3.63E-03
Xenon - 131m	Ci	(1)	(1)	3.02E-03	2.62E-03
Xenon – 133	Ci	(1)	(1)	2.10E-01	1.04E-01
Xenon – 133m	Ci	(1)	(1)	2.13E-03	6.17E-04
Xenon – 135	Ci	(1)	(1)	4.33E-04	1.25E-04
Total For Period	Ci	(1)	(1)	2.24E-01	1.11E-01

		CONTINUOUS MODE		BATCH MODE	
NUCLIDES RELEASED	Units	3RD QUARTER	4TH QUARTER	3RD QUARTER	4TH QUARTER
Krypton - 85	Ci	(1)	(1)	1.89E-03	(1)
Xenon-131m	Ci	(1)	(1)	(1)	(1)
Xenon - 133	Ci	(1)	(1)	3.59E-03	1.10E-02
Xenon – 133m	Ci	(1)	(1)	(1)	(1)
Xenon - 135	Ci	(1)	(1)	8.90E-07	(1)
Total For Period	Ci	(1)	(1)	5.48E-03	1.10E-02

NOTES TO TABLE 2B

(1) Less than minimum detectable activity which meets the LLD requirements of ODCM Surveillance Requirement 4.11.1.1.1.

(2) Continuous mode effluents are not analyzed for Fe-55.

TABLE 3A
CALVERT CLIFFS NUCLEAR POWER PLANT
EFFLUENT AND WASTE DISPOSAL ANNUAL REPORT
2004
SOLID WASTE AND IRRADIATED FUEL SHIPMENTS
A. SOLID WASTE SHIPPED OFFSITE FOR BURIAL OR DISPOSAL (NOT IRRADIATED FUEL)

1. Type of Waste		Units	12-Month Period	Est. Total Error %
a)	Dewatered spent resin	m^3 Ci	1.10E+01 2.17E+02	2.50E+01
b)	Dry compressible waste, contaminated equipment, etc.	m^3 Ci	9.16E+2 4.78E+00	2.50E+01
c)	Irradiated components, control rods, etc.	m^3 Ci	1.56E-01 1.08E+04	2.50E+01
d)	Other (Cartridge Filters)	m^3 Ci	5.32E+00 1.51E+01	2.50E+01

Volume shipped represents waste generated prior to offsite volume reduction.

2. **Estimate of Major Nuclides** (By Type of Waste - Only nuclides >1 % are reported)

a)	Mn-54	2.34E+00%
	Fe-55	1.36E+01%
	Co-58	2.15E+00%
	Co-60	7.78E+00%
	Ni-63	2.05E+01%
	Sb-125	1.00E+00%
	Cs-134	1.62E+01%
	Cs-137	3.53E+01%
b)	Cr-51	1.07E+00%
	Mn-54	1.01E+00%
	Fe-55	3.84E+01%
	Co-58	9.78E+00%
	Co-60	1.55E+01%
	Ni-63	2.29E+01%
	Nb-95	3.49E+00%
	Zr-95	1.60E+00%
	Cs-137	3.04E+00%
c)	Co-60	4.66E+01%
	Fe-55	4.52E+01%
	Ni-63	3.27E+00%
	Mn-54	1.52E+00%

d)	C-14	2.06E+00%
	Fe-55	6.36E+01%
	Co-60	9.72E+00%
	Ni-63	1.91E+01%
	Sb-125	1.38E+00%

3. Solid Waste Disposition

Number of Shipments	Mode of Transportation	Destination
2	Motor Surface Transit	Chem. Nuclear Systems, Inc. Barnwell, SC
18	Motor Surface Transit	Duratek Oak Ridge, TN
4	Motor Surface Transit	Studsvik, Inc
32	Motor Surface Transit	RACE, Inc

B. IRRADIATED FUEL SHIPMENTS (DISPOSITION) N/A

ENCLOSURE (2)

OFFSITE DOSE CALCULATION MANUAL FOR

CALVERT CLIFFS NUCLEAR POWER PLANT,

Revision 8

Calvert Cliffs Nuclear Power Plant, Inc.
July 14, 2005

OFFSITE DOSE CALCULATION MANUAL

Revision 8

Calvert Cliffs Nuclear Power Plant

PREPARED BY: _____ DATE: 17-Aug-04
Technical Writer

REVIEWED BY: _____ DATE: 17-Aug-04
RETS Program Manager

REVIEWED BY: _____ DATE: 8/18/04
General Supervisor - Chemistry

REVIEWED BY: _____ 04-040 DATE: 5/27/04
POSRC Meeting Number

APPROVED BY: _____ DATE: 8/18/04
Plant General Manager

EXECUTIVE SUMMARY OF CHANGES

REV	CHG	PAGE	DESCRIPTION
8	0	117	The TE-001 test is now STP-M-462-2, the footnote was changed to reflect this change.
		121	Simplified equation 29G by rewriting it into an equivalent form.
		122	Deleted parameters no longer in equation 29G and changed the units on background to microcuries per second.
		124	Simplified equation 29G by rewriting it into an equivalent form.
		125	Deleted parameters no longer in equation 29G and changed the units on background to microcuries per second.
		134	The TE-001 test is now STP-M-462-2, the footnote was changed to reflect this change.
		136	Parentheses were changed in Equation 27G.
		139	Parentheses were changed in Equation 27G.
		232	Changed the flowrate for Unit 2 Main Plant Vent Stack to accurately reflect current plant conditions as measured by STP-M-462-2.
		314	Changed the description of several sample stations to accurately describe proper sector designations. These changes are made based on satellite imagery.
		316	Added 2 new TLD Sample locations to map. The new sample locations ensure tht each meteorological sector has a TLD.

LIST OF EFFECTIVE PAGES

PAGES	REVISION/CHANGE
1-317	8

PROCEDURAL ALTERATIONS

PAGES	REVISION/CHANGE
	08/00

TABLE OF CONTENTS

Part 1.0: PURPOSE AND APPLICABILITY/SCOPE 6

Part 2.0 : DEFINITIONS AND REFERENCES 8

Developmental References 13
Performance References 15

PArt 3.0 / 4.0 : CONTROLS AND SURVEILLANCE REQUIREMENTS 16

Monitoring Instrumentation 18

Radioactive Gaseous Effluent 18
Radioactive Liquid Effluent 23

Radioactive Effluents 28

Liquid Effluents: 28
Gaseous Effluents: 34
Total Dose 41

Radiological Environmental Monitoring 42

Program 42
Land Use Census 54
Interlaboratory Comparison Program 55

Part 5.0 : CALCULATIONAL METHODOLOGIES 56

Radioactive Liquid Effluents 56

Release Pathways [B527] 56
Types of Liquid Releases 58
Processing Equipment 58
Liquid Effluent Radiation Monitor Alarm and Fixed Setpoints 59
Limits On Radionuclide Concentrations In Liquid Effluents 89
Limits On Cumulative Total Body Doses And Cumulative Organ Doses For Liquid Effluents 95
Limits For The Liquid Waste Processing System 102

Radioactive Gaseous Effluents 105

Release Pathways [B527] 105
Types of Gaseous Releases 110
Processing Equipment 110
Gaseous Effluent Radiation Monitors And Setpoints 111
Annual Total Body Dose Rate Due To Noble Gases In Gaseous Effluents 151
Annual Skin Dose Rate Due To Noble Gases In Gaseous Effluents 159
Annual Organ Dose Rates Due To Iodines And Particulates In Gaseous Effluents 166
Cumulative Gamma Air Doses Due To Noble Gases In Gaseous Effluents 172
Cumulative Beta Air Doses Due To Noble Gases In Gaseous Effluents 180
Cumulative Organ Doses Due To Iodines And Particulates In Gaseous Effluents 187
Limits For The Gaseous RadWaste Processing System 194
Limits On Total Annual Dose -- Gases, Liquids, and Uranium Fuel Cycle Sources 196
Special Exceptions and Assumptions For Calculation of Doses and Dose Rates 200

TABLE OF CONTENTS (Continued)

Radiological Environmental Monitoring Program 202

Radiological Environmental Monitoring Program 202
Land Use Census 207
Interlaboratory Comparison Program 209
Annual Radiological Environmental Operating Report 210
Independent Spent Fuel Storage Installation Monitoring Program 213

Radioactive Effluent Release Report 217

Introduction 217
Responsibilities 217
Report Contents 217
Report Submittal 218

Administration Of The ODCM 219

Introduction 219
Controls On The ODCM 219
Surveillance Requirements 220
Responsible Company Organizations 220
Initiating Conditions 220
Calculation Methodologies 221
Corrective actions 221

Bases 221

ATTACHMENTS:
Attachment 1 Final Grading And Drainage Plan 222
Attachment 2 Sources of Liquid Radioactive Waste 223
Attachment 3 226
Attachment 4 Block Diagram of Liquid Radioactive Waste Systems 227
Attachment 5 Radionuclides in Typical Radwaste Discharges 228
Attachment 6 Liquid Effluent Dose Factors (mrem/hr per uCi/ml) 229
Attachment 7 General Information Related to Gaseous Releases via the Main Vents 232
Attachment 8 General Information Related to Gaseous Releases via Pathways other than the Main Vents 233
Attachment 9 Block Diagram of Gaseous Radioactive Waste Systems 234
Attachment 10 Noble Gas Dose Factors 235
Attachment 11 Empirical Derivation Of Site-Specific Dose Factors 236
Attachment 12 Gaseous Effluent Pathway Dose Factors 241
Attachment 13 Environmental Monitoring Sites for REMP 307
Attachment 14 Radiological Environmental Monitoring Program Surveillances for Direct Radiation 308
Attachment 15 Radiological Environmental Monitoring Program Surveillances for Airborne Activity 309
Attachment 16 Radiological Environmental Monitoring Program Surveillances for Waterborne Activity 310
Attachment 17 Radiological Environmental Monitoring Program Surveillances for Ingestible Activity 311
Attachment 18 Map of Environmental Monitoring Sites for REMP (5 Km Radius) 312
Attachment 19 Map of Environmental Monitoring Sites for REMP (10 Mile Radius) 313
Attachment 20 Environmental Monitoring Sites for ISFSI 314
Attachment 21 Map of Environmental Monitoring Sites for ISFSI 315
Attachment 22 Map of Environmental Monitoring Sites for ISFSI 316
Attachment 23 Effluent Radiation Monitors 317

PART 1.0: PURPOSE AND APPLICABILITY/SCOPE

PURPOSE

A. The ODCM lists the radiological effluent controls established by Technical Specifications 5.5.1 and 5.5.4 at Calvert Cliffs Nuclear Power Plant (CCNPP) for the purpose of ensuring the amount of radioactive materials released to the environment are as low as reasonably achievable.

B. The ODCM defines parameters and methodologies for calculating projected doses and dose rates resulting from the release of radioactive materials in liquid and gaseous effluents.

C. The ODCM defines parameters and methodologies for calculating alarm and fixed setpoints for Technical Specification related effluent radiation monitoring systems.

D. The ODCM defines and establishes controls for the Radiological Environmental Monitoring Program.

APPLICABILITY/SCOPE

A. The information presented in this manual is applicable to any division, department, section, or unit within the Calvert Cliffs Nuclear Power Plant (CCNPPI) which is either wholly or partly responsible for performing any of the activities listed in the PURPOSES section of this procedure. Responsible organizations include, but are not limited to, the following:

1. CCNPPI, CHEMISTRY SECTION
2. Constellation Generation Group, Technical Services, Analytical Chemistry Unit
3. CCNPPI, Electrical and Controls (E&C) Section
4. CCNPPI, Operations Section
5. CCNPPI, Radiation Safety Section

B. This manual is applicable to the determination of alarm and fixed setpoints for the following radioactive gaseous effluent monitoring instrumentation:

1. 0-RE-2191
2. 1/2-RE-5415
3. 1/2-RE-5416

C. This manual is applicable to the determination of alarm and fixed setpoints for the following radioactive liquid effluent monitoring instrumentation:

1. 0-RE-2201
2. 1/2-RE-4014
3. 1/2-RE-4095

D. This manual is applicable to the determination of the offsite doses and/or offsite dose rates due to the following:

1. Radioactive material in gaseous waste discharged from CCNPP
2. Radioactive material in liquid waste discharged from CCNPP
3. Radioactive material contained in outside storage tanks at CCNPP

E. This manual is applicable to the determination of the radiological effects on the environment due to the presence of Calvert Cliffs Nuclear Power Plant.

F. The ODCM is based on Technical Specifications and CCNPPIs interpretation of industry standards and practices.

PART 2.0 : DEFINITIONS AND REFERENCES

DEFINITIONS

The defined terms of this section appear in capitalized type and are applicable throughout these Controls.

ABNORMAL AND/OR UNANTICIPATED RADIOACTIVE RELEASE:

Any unplanned or uncontrolled release of radioactive material from the **SITE BOUNDARY**.

ACTION:

That part of a control which prescribes remedial measures required under designated conditions.

BATCH RELEASE:

A **BATCH RELEASE** is the discharge of liquid (or gaseous) waste of a discrete volume. (NUREG-0133, page 14)

CHANNEL CALIBRATION:

A **CHANNEL CALIBRATION** shall be the adjustment, as necessary, of the channel output such that it responds with the necessary range and accuracy to known values of the parameter which the channel monitors. The **CHANNEL CALIBRATION** shall encompass the entire channel including the sensor and alarm and/or trip functions, and shall include the **CHANNEL FUNCTIONAL TEST**. The **CHANNEL CALIBRATION** may be performed by any series of sequential, overlapping or total channel steps such that the entire channel is calibrated.

CHANNEL CHECK:

A **CHANNEL CHECK** shall be the qualitative assessment of channel behavior during operation by observation. This determination shall include, where possible, comparison of the channel indication and/or status with other indications and/or status derived from independent instrument channels measuring the same parameter.

CHANNEL FUNCTIONAL TEST:

a. An analog **CHANNEL FUNCTIONAL TEST** shall be the injection of a simulated signal into the channel as close to the primary sensor as practicable to verify **OPERABILITY** including alarm and/or trip functions.
b. A bistable **CHANNEL FUNCTIONAL TEST** shall be injection of a simulated signal into the channel sensor to verify **OPERABILITY** including alarm and/or trip functions.

COMPOSITE SAMPLE:

A **COMPOSITE SAMPLE** is a combination of individual samples obtained at intervals that are very short (e.g., hourly) in relation to the compositing time interval (e.g., monthly) to assure obtaining a representative sample. The sample volume should be proportionate to the volume of fluid, either liquid or gas, flowing through the system.

CONTINUOUS RELEASE

A **CONTINUOUS RELEASE** is the discharge of liquid (or gaseous) wastes of a nondiscreet volume; e.g., from a volume or system that has an input flow during the **CONTINUOUS RELEASE**. (NUREG-0133, P. 14.)

CONTINUOUS SAMPLING FREQUENCY

A **CONTINUOUS SAMPLING FREQUENCY** is a sampling arrangement that provides for uninterrupted sampling flow under normal operating conditions. During periods of sampling interruption, the requirement for continuous sampling is considered to be met, provided the interruption is less than one hour AND plant conditions are such that no adverse trend in effluents would be present during the period of interruption. Interruptions in continuous sampling during changing plant conditions OR interruptions in continuous sampling for greater than one hour must be evaluated to determine if an ODCM violation has occurred.

DOSE EQUIVALENT IODINE-131:

DOSE EQUIVALENT I-131 shall be that concentration of I-131 (microcuries per gram) which alone would produce the same thyroid dose as the quantity and isotopic mixture of I-131, I-132, I-133, I-134, and I-135 actually present. The thyroid dose conversion factors used for this calculation shall be those listed in Table III of TID-14844, "Calculation of Distance Factors for Power and Test Reactor Sites."

FREQUENCY NOTATION:

The frequency notation specified for the performance of Surveillance Requirements shall correspond to the intervals defined in the following Table .

Frequency Notation Table

NOTATION	FREQUENCY
S	At least once per 12 hours
D	At least once per 24 hours
W	At least once per 7 days
M	At least once per 31 days
Q	At least once per 92 days
SA	At least once per 6 months
R	At least once per 18 months
S/U	Prior to each reactor startup
P	Completed prior to each release
N.A.	Not applicable
Refueling Interval	At least once per 24 months

GAMMA ISOTOPIC ANALYSIS:

A **GAMMA ISOTOPIC ANALYSIS** is a analytical method of measurement used for the identification and quantification of gamma-emitting radionuclides.

GASEOUS RADWASTE PROCESSING SYSTEM:

A **GASEOUS RADWASTE PROCESSING SYSTEM** is any system designed and installed to reduce radioactive gaseous effluents by collecting primary coolant system offgases from the primary system and providing for delay or holdup for the purpose of reducing the total radioactivity prior to release to the environment.

GSC:

GSC stands for General Supervisor Chemistry.

LIQUID RADWASTE PROCESSING SYSTEM:

A **LIQUID RADWASTE PROCESSING SYSTEM** is the system installed and designed to reduce radioactive liquid effluents. The minimum components necessary for reducing liquid radioactive effluents is either 13 or 14 Reactor Coolant Waste Ion Exchange; however, other equipment in the system may be used in the maintenance of ALARA for liquid radioactive effluents.

LOWER LIMIT OF DETECTION:

The **LLD** is the smallest concentration of radioactive material in a sample that will yield a net count, above system background, that will be detected with 95% probability with only 5% probability of falsely concluding that a blank observation represents a "real" signal.

MEMBERS OF THE PUBLIC:

MEMBERS OF THE PUBLIC shall include all persons who are not occupationally associated with the plant. This category does not include employees of the utility, its contractors, or vendors. Also excluded from this category are persons who enter the site to service equipment or to make deliveries. This category does include persons who use portions of the site for recreational, occupational, or other purposes not associated with the plant.

OFFSITE DOSE CALCULATION MANUAL:

The **OFFSITE DOSE CALCULATION MANUAL** (ODCM) shall contain the methodology and parameters used in the calculation of offsite doses resulting from radioactive gaseous and liquid effluents, in the calculation of gaseous and liquid effluent monitoring alarm and fixed setpoints, and in the conduct of the Environmental Radiological Monitoring Program. The ODCM shall also contain the radioactive effluent controls, radiological environmental monitoring activities, and descriptions of the information that should be included in the Annual Radiological Environmental Operating and Radioactive Effluent Release Reports required by Technical Specification 5.6.2 and 5.6.3.

OPERABILITY:

A system, subsystem, train, component or device shall be operable or have **OPERABILITY** when it is capable of performing its specified function(s). Implicit in this definition shall be the assumption that all necessary attendant instrumentation, controls, normal and emergency electrical power sources, cooling or seal water, lubrication or other required auxiliary equipment that are required for the system, subcomponent or device to perform its function(s) are also capable of performing their related support function(s).

OPERATIONAL MODE:

An **OPERATIONAL MODE** shall correspond to any one inclusive combination of core reactivity condition, power level and average reactor coolant temperature specified below.

Operational Modes

MODE	REACTIVITY CONDITION, K_{eff}	% RATED THERMAL POWER*	AVERAGE COOLANT TEMPERATURE
POWER OPERATION	≥0.99	>5%	≥300 °F
STARTUP	≥0.99	≤5%	≥300 °F
HOT STANDBY	<0.99	0	≥300 °F
HOT SHUTDOWN	<0.99	0	300 °F > T_{avg} > 200 °F
COLD SHUTDOWN	<0.99	0	≤200 °F
REFUELING**	≤0.95	0	≤140 °F

* Excluding decay heat.
** Reactor vessel head unbolted or removed and fuel in the vessel.

PROCESS CONTROL PROGRAM:

PROCESS CONTROL PROGRAM shall contain the current formula, sampling, analyses, tests, and determinations to be made to ensure that the processing and packaging of solid radioactive wastes based on demonstrated processing of actual or simulated wet solid wastes will be accomplished in such a way as to assure compliance with 10 CFR Part 20, 10 CFR Part 71 and Federal and State and Local regulations governing the disposal of the radioactive waste.

PROJECTED DOSE:

A reasonable estimate of dose expected as a result of future radioactive releases.

PURGE OR PURGING:

PURGE or PURGING is the controlled process of discharging air or gas from a confinement to maintain temperature, humidity, concentration, or other operating condition, in such a manner that replacement air or gas is required to purify the confinement.

RATED THERMAL POWER:

RATED THERMAL POWER shall be a total reactor core heat transfer rate to the reactor coolant of 2700 MWt.

SIMULTANEOUS RELEASES:

Simultaneous liquid releases are discharges of liquid radwaste which occur at the same time.
Simultaneous gaseous releases are discharges of gaseous radwaste which occur at the same time excluding main vent discharges.

SITE BOUNDARY:

The SITE BOUNDARY shall be that line beyond which the land is neither owned, nor leased, nor otherwise controlled by the licensee.
(The SITE BOUNDARY is depicted on Attachment 18, "Environmental Monitoring Sites")

SOURCE CHECK:

A SOURCE CHECK shall be the qualitative assessment of channel response when the channel sensor is exposed to a source of increased radioactivity.

THERMAL POWER:

The THERMAL POWER shall be the total reactor core heat transfer rate to the reactor coolant.

TYPICAL RADWASTE RELEASES (OR TYPICAL RADWASTE EFFLUENTS):

TYPICAL RADWASTE RELEASES are defined as (1) all releases conducted during any calendar quarter while either Unit 1 or Unit 2 is in mode 1, and also includes (2) all releases conducted during any calendar quarter following mode 1 operation of either Unit 1 or Unit 2.

UNRESTRICTED AREA:

An UNRESTRICTED AREA shall be any area at or beyond the **SITE BOUNDARY** access to which is not controlled by the licensee for purposes of protection of individuals from exposure to radiation and radioactive materials, or any area within the **SITE BOUNDARY** used for residential quarters of/for industrial, commercial, institutional, and/or recreational purposes.

VENTILATION EXHAUST PROCESSING SYSTEM:

A **VENTILATION EXHAUST PROCESSING SYSTEM** is any system designed and installed to reduce gaseous radioiodine or radioactive material in particulate form in effluents by passing ventilation or vent exhaust gases through charcoal adsorbers and/or High Efficiency Particulate Air (HEPA) filters for the purpose of removing iodines or particulates from the gaseous exhaust stream prior to the release to the environment. Such a system is not considered to have any effect on noble gas effluents. Engineered Safety Feature (ESF) atmospheric cleanup systems are not considered to be **VENTILATION EXHAUST TREATMENT SYSTEM** components.

VENTING:

VENTING is the controlled process of discharging air or gas from a confinement to maintain temperature, pressure, humidity, concentration or other operating condition, in such a manner that replacement air or gas is not provided or required during **VENTING**. Vent, used in system names, does not imply a **VENTING** process.

WASTE GAS HOLDUP SYSTEM:

See **GASEOUS RADWASTE PROCESSING SYSTEM**.

REFERENCES

DEVELOPMENTAL REFERENCES

1. NUREG-0133, "Preparation Of Radiological Effluent Technical Specification For Nuclear Power Plants", Boegli, J.S., R. R. Bellamy, W. L. Britz, and R. L. Waterfield, (October 1978).

2. Regulatory Guide 1.109, "Calculation Of Annual Doses To Man From Routine Release Of Reactor Effluents For The Purpose Of Compliance With 10 CFR Part 50, Appendix I," Revision 1, (October 1977).

3. Regulatory Guide 1.111, "Methods For Estimating Atmospheric Transport And Dispersion Of Gaseous Effluents In Routine Releases From Light-Water-Cooled Reactors," Revision 1, (July 1977).

4. CCNPP System Description Number 14B, "Reactor Coolant Waste Processing System Description."

5. Updated Final Safety Analysis Report, Chapter 11, "Waste Processing And Radiation Protection."

6. CCNPP System Description Number 14D, "Miscellaneous Liquid Waste Processing System Description."

7. OI-17D, "Miscellaneous Waste Processing System"

8. OI-17C, "Reactor Coolant Waste Processing System"

9. Title 10 of the Code of Federal Regulations, Part 20, Jan 1990 and May 1991

10. Title 10 of the Code of Federal Regulations, Part 50

11. Calvert Cliffs Nuclear Power Plant Semi-Annual Radiological Effluent Release Report (1986, 1987, 1988).

12. Radioactive Decay Data Tables, David C. Kocher, 1981.

13. Radiological Health Handbook, Bureau of Radiological Health, Jan. 1970.

14. TE-001, "Main Vent Stack Flow Measurement"

15. ETP-87-16, "Main Vent Stack Flow Measurement"

16. Verification And Validation Of The Gaseous Release Permit Portion Of The CCNPP EMS Computer Code, J. S. Bland And Associates, July 10, 1990.

17. Land Use Survey In The Vicinity Of The Calvert Cliffs Nuclear Power Plant September 1991, (for the year 1990), Baltimore Gas And Electric Company, Environmental Programs Section, C. Key, B. E. Helbing

18. CP-607, Revision 1, "Offsite Dose Calculation Manual"

19. NO-1-201, Calvert Cliffs Operating Manual

20. TID-14844, "Calculation of Distance Factors for Power and Test Reactor Sites"

21. "Plant Data Book", BGE CCNPP Units 1 and 2, Bechtel Power Corporation, Volume 1, Job 6750.

22. 50.59 Log No. 82-B-999-028-R00, Safety Analysis No. 2, FCR 82-1053, Supplement 1 (Component Cooling System) [B527]

23. 50.59 Log No. 90-0-074-011-R2, Activity MASE 90-7 (Plant Nitrogen System) [B527]

24. 50.59 Log No. 90-0-029-045-R1, Activity MASE 90-6 (Plant Heating System) [B527]

25. 50.59 Log No. 90-0-037-044-R1, Activity MASE 90-5 (Demineralized Water System) [B527]

26. 50.59 Log No. 90-B-012-043-R1, Activity MASE 90-4 (Service Water System) [B527]

27. 50.59 Log No. 90-0-027-037-R2, Activity MASE 90-8 (Auxiliary Boiler System) [B527]

28. Bechtel Power Corporation, Calculation Number M-90-20, "Allowable Radioactive Contamination Levels in the Plant Heating System" [B527]

29. Bechtel Power Corporation, Calculation Number M-90-18, "Allowable Radioactive Contamination Levels in the Nitrogen System Header" [B527]

30. Bechtel Power Corporation, Calculation Number M-90-04, "Allowable Radioactive Contamination Levels in Auxiliary Boiler Water" [B527]

31. Bechtel Power Corporation, Calculation Number M-90-21, "Allowable Radioactive Contamination Levels in the Demineralized Water System" [B527]

32. Bechtel Power Corporation, Calculation Number M-90-19, "Allowable Radioactive Contamination Levels in the Service Water System" [B527]

33. Bechtel Power Corporation, Job Number 11865, Calculation Number 7.4.3-15, "Allowable Radioactive Contamination Levels in the Condensate Storage Tank" [B527]

34. EN-1-100, Engineering Service Process Overview

35. OI-8A, Blowdown System

36. NUREG-1301, "OFFSITE DOSE CALCULATION MANUAL: Standard Radiological Effluent Controls for Pressurized Water Reactors", W. W. Meinke, and T. H. Essig, (Published April 1991).

37. Radiological Environmental Monitoring Program Annual Report for the Calvert Cliffs Nuclear Power Plant Units 1 and 2 January 1 - December 31, 1991", Baltimore Gas And Electric Company, March 1992

38. 50.59 Log No. 90-B-037-120-R2, Activity MASE 90-11 (Condensate Storage Tank) [B527]

39. Regulatory Guide 4.13, Performance Testing and Procedural Specifications for Thermoluminescence Dosimetry; Environmental Applications

PERFORMANCE REFERENCES

1. STP-M-462-1 and STP-M-462-2, Main Vent Stack Flow Measurement

2. Technical Specifications

3. Technical Requirements Manual

4. Regulatory Guide 4.13, Performance Testing and Procedural Specifications for Thermoluminescence Dosimetry; Environmental Applications

5. TE-006, Containment Purge Exhaust System HEPA Filter Test

PART 3.0 / 4.0 : CONTROLS AND SURVEILLANCE REQUIREMENTS

CONTROLS

3.0.1 Compliance with the Controls contained in the succeeding controls is required during the **OPERATIONAL MODES** or other conditions specified therein; except that upon failure to meet the Control, the associated **ACTION** requirements shall be met.

3.0.2 Noncompliance with a Control shall exist when the requirements of the Control and associated **ACTION** requirements are not met within the specified time intervals. If the Control is restored prior to expiration of the specified time intervals, completion of the **ACTION** requirements is not required.

3.0.3 When a Control is not met, except as provided in the associated **ACTION** requirements, within one hour **ACTION** shall be initiated to place the unit in a MODE in which the control does not apply by placing it, as applicable, in:

1. At least HOT STANDBY within the next 6 hours,
2. At least HOT SHUTDOWN within the following 6 hours, and
3. At least COLD SHUTDOWN within the subsequent 24 hours.

Where corrective measures are completed that permit operation under the **ACTION** requirements, the **ACTION** may be taken in accordance with the specified time limits as measured from the time of failure to meet the Control. Exceptions to these requirements are stated in the individual controls.

3.0.4 Entry into an **OPERATIONAL MODE** or other specified condition shall not be made unless the conditions of the Control are met without reliance on provisions contained in the **ACTION** requirements. This provision shall not prevent passage through **OPERATIONAL MODES** as required to comply with **ACTION** requirements. Exceptions to these requirements are stated in the individual controls.

3.0.5 When a system, subsystem, train, component or device is determined to be inoperable solely because its emergency power source is inoperable, or solely because its normal power source is inoperable, it may be considered OPERABLE for the purpose of satisfying the requirements of its applicable Control, provided: (1) its corresponding normal or emergency power source is OPERABLE; and (2) all of its redundant system(s), subsystem(s), train(s), component(s) and device(s) are **OPERABLE**, or likewise satisfy the requirements of this specification. Unless both conditions (1) and (2) are satisfied within 2 hours, action shall be initiated to place the unit in a **MODE** in which the applicable Control does not apply by placing it, as applicable in:

1. At least HOT STANDBY within the next 6 hours,
2. At least HOT SHUTDOWN within the following 6 hours, and
3. At least COLD SHUTDOWN within the subsequent 24 hours.

This specification is not applicable in **MODES** 5 or 6.

SURVEILLANCE

4.0.1 Surveillance Requirements shall be applicable during the **OPERATIONAL MODES** or other conditions specified for individual Control unless otherwise stated in an individual Surveillance Requirement.

4.0.2 Each Surveillance Requirement shall be performed within the specified time interval with a maximum allowable extension not to exceed 25 percent of the specified surveillance interval.

4.0.3 Failure to perform a Surveillance Requirement within the allowed surveillance interval, defined by Control 4.0.2, shall constitute noncompliance with the **OPERABILITY** requirements for a Control. The time limits of the **ACTION** requirements are applicable at the time it is identified that a Surveillance Requirement has not been performed. However, this time of applicability may be delayed for up to 24 hours to permit the completion of the surveillance when the allowable outage time limits of the **ACTION** requirements are less than 24 hours. Surveillance Requirements do not have to be performed on inoperable equipment.

4.0.4 Entry into an **OPERATIONAL MODE** or other specified condition shall not be made unless the Surveillance Requirement(s) associated with the Control have been performed within the stated surveillance interval or as otherwise specified. This provision shall not prevent passage through or to **OPERATIONAL MODES** as required to comply with **ACTION** requirements.

MONITORING INSTRUMENTATION

RADIOACTIVE GASEOUS EFFLUENT

CONTROLS

3.3.3.9 The radioactive gaseous effluent monitoring instrumentation channels shown in Table 3.3-12 shall be **OPERABLE** with their alarm or alarm-with-automatic-termination setpoints set to ensure that the limits of Control 3.11.2.1 are not exceeded. The setpoints of these channels shall be determined and adjusted in accordance with the methodology and parameters in the ODCM.

APPLICABILITY: **As shown in Table 3.3-12.**

ACTION:

a. With a radioactive gaseous effluent monitoring instrumentation channel alarm setpoint less conservative than required by the above Control, without delay suspend the release of radioactive gaseous effluents monitored by the affected channel, or declare the channel inoperable, or change the setpoint so it is acceptably conservative.

b. With less than the minimum number of radioactive gaseous effluent monitoring instrumentation channels **OPERABLE**, take the **ACTION** shown in Table 3.3-12. Exert best efforts to return the instruments to **OPERABLE** status within 30 days and, if unsuccessful, explain in the next Annual Radioactive Effluent Release Report why the inoperability was not corrected in a timely manner.

c. The provisions of Controls 3.0.3 and 3.0.4 are not applicable.

SURVEILLANCE REQUIREMENTS

4.3.3.9 Each radioactive gaseous effluent monitoring instrumentation channel shall be demonstrated **OPERABLE** by performance of the **CHANNEL CHECK, SOURCE CHECK, CHANNEL CALIBRATION** and **CHANNEL FUNCTIONAL TEST** operations at the frequencies shown in Table 4.3-11.

TABLE 3.3-12
RADIOACTIVE GASEOUS EFFLUENT MONITORING INSTRUMENTATION

INSTRUMENT	MINIMUM CHANNELS OPERABLE	APPLICABILITY	ACTION
1. WASTE GAS HOLDUP SYSTEM			
a. Noble Gas Activity Monitor - Providing Alarm and Automatic Termination of Release	1	*	35
b. Effluent System Flow Rate Measuring Device	1	*	36
2. MAIN VENT SYSTEM			
a. Noble Gas Activity Monitor	1	*	37
b. Iodine Sampler	1	*	38
c. Particulate Sampler	1	*	38
d. Tritium Sampler	1	*	38

* At all times

TABLE 3.3-12 (Continued)

ACTION STATEMENTS

ACTION 35 - With the number of channels **OPERABLE** less than required by the Minimum Channels **OPERABLE** requirement, the contents of the tank(s) may be released to the environment:

a. Using the main vent monitor as a backup and recording RMS readings every 15 minutes during the release, or

b. Provided that prior to initiating the release, at least two independent samples of the tank's contents are analyzed, and at least two technically qualified members of the Facility Staff independently verify the release rate calculations and two qualified operators verify the discharge valve lineup.

Otherwise, suspend release of radioactive effluents via this pathway.

ACTION 36 - With the number of channels **OPERABLE** less than required by the Minimum Channels **OPERABLE** requirement, effluent releases via this pathway may continue provided the flow rate is estimated at least once per 4 hours.

ACTION 37 - With the number of channels **OPERABLE** less than required by the Minimum Channels **OPERABLE** requirement, effluent releases via this pathway may continue provided either (1) grab samples are taken and analyzed for gross activity at least once per 24 hours, or (2) an equivalent monitor is provided.

ACTION 38 - With the number of channels **OPERABLE** less than required by the Minimum Channels **OPERABLE** requirement, effluent releases via the affected pathway may continue provided samples are continuously collected as required in Table 4.11-2 with auxiliary sampling equipment.

TABLE 4.3-11
RADIOACTIVE GASEOUS EFFLUENT MONITORING INSTRUMENTATION SURVEILLANCE REQUIREMENTS

INSTRUMENT	CHANNEL CHECK	SOURCE CHECK	CHANNEL CALIBRATION	CHANNEL FUNCTIONAL TEST	MODES IN WHICH SURVEILLANCE REQUIRED
1. WASTE GAS HOLDUP SYSTEM					
a. Noble Gas Activity Monitor - Providing Alarm and Automatic Termination of Release	P	P	R(3)	SA(1)	*
b. Effluent System Flow Rate Measuring Device	D(4)	NA	R	NA	*
2. MAIN VENT SYSTEM					
a. Noble Gas Activity Monitor	D	M	R(3)	SA(2)	*
b. Iodine Sampler	W	NA	NA	NA	*
c. Particulate Sampler	W	NA	NA	NA	*
d. Tritium Sampler	W	NA	NA	NA	*

* At all times other than when the line is valued out and locked

TABLE 4.3-11 (Continued)

TABLE NOTATION

(1) The **CHANNEL FUNCTIONAL TEST** shall also demonstrate the automatic isolation of this pathway and/or Control Room alarm annunciation occurs if the appropriate following condition(s) exists:

1. Instrument indicates measured levels above the alarm-with-automatic-termination setpoint.
2. Circuit failure.
3. Instrument indicates a downscale failure.

(2) The **CHANNEL FUNCTIONAL TEST** shall also demonstrate that Control Room alarm annunciation occurs if any of the following conditions exists:

1. Instrument indicates measured levels above the alarm setpoint.
2. Circuit failure.
3. Instrument indicates a downscale failure.

(3) The initial **CHANNEL CALIBRATION** shall be performed using one or more of the reference standards traceable to NIST or using standards that have been obtained from suppliers that participate in measurement assurance activities with NIST. These standards shall permit calibrating the system within its intended range of energy and measurement range. For subsequent **CHANNEL CALIBRATION**, sources that have been related to the initial calibration can be used.

(4) The **CHANNEL CHECK** shall consist of verifying indication of flow during periods of release and shall be made at least once per 24 hours during periods in which effluent releases are made.

RADIOACTIVE LIQUID EFFLUENT

CONTROLS

3.3.3.10 The radioactive liquid effluent monitoring instrumentation channels shown in Table 3.3-13 shall be **OPERABLE** with their alarm or alarm-with-automatic-termination setpoints set to ensure that the limits of Control 3.11.1.1 are not exceeded. The setpoints of these channels shall be determined and adjusted in accordance with the methodology and parameters in the **OFFSITE DOSE CALCULATION MANUAL (ODCM).**

APPLICABILITY: **As shown in Table 3.3-13.**

ACTION:

a. With a radioactive liquid effluent monitoring instrumentation channel alarm/trip setpoint less conservative than required by the above Control, without delay suspend the release of radioactive liquid effluents monitored by the affected channel, or declare the channel inoperable, or change the setpoint so it is acceptably conservative.

b. With less than the minimum number of radioactive liquid effluent monitoring instrumentation channels **OPERABLE**, take the **ACTION** shown in Table 3.3-13. Exert best efforts to return the instruments to **OPERABLE** status within 30 days and, if unsuccessful, explain in the next Annual Radioactive Effluent Release Report why the inoperability was not corrected in a timely manner.

c. The provisions of Controls 3.0.3 and 3.0.4 are not applicable.

SURVEILLANCE REQUIREMENTS

4.3.3.10 Each radioactive liquid effluent monitoring instrumentation channel shall be demonstrated **OPERABLE** by performance of the **CHANNEL CHECK, SOURCE CHECK, CHANNEL CALIBRATION** and **CHANNEL FUNCTIONAL TEST** operations at the frequencies shown in Table 4.3-12.

TABLE 3.3-13

RADIOACTIVE LIQUID EFFLUENT MONITORING INSTRUMENTATION

INSTRUMENT	MINIMUM CHANNELS OPERABLE	APPLICABILITY	ACTION
1. GROSS RADIOACTIVITY MONITORS PROVIDING ALARM AND AUTOMATIC TERMINATION OF RELEASE			
a. Liquid Radwaste Effluent Line	1	(1)	28
b. Steam Generator Blowdown Effluent Line	1	(2)	29
2. FLOW RATE MEASUREMENT DEVICES			
a. Liquid Radwaste Effluent Line	1	(1)	30
b. Steam Generator Blowdown Effluent Line	1	(2)	30

Note: (1) At all times.
(2) At all times while process flow is present.

TABLE 3.3-13 (Continued)

ACTION STATEMENTS

ACTION 28 - With the number of channels **OPERABLE** less than required by the Minimum Channels **OPERABLE** requirement, effluent releases may continue provided that prior to initiating a release:

a. At least two independent samples are analyzed in accordance with Control 4.11.1.1.1, and

b. At least two technically qualified members of the Facility Staff independently verify the release rate calculations and two qualified operators verify the discharge valve line up.

ACTION 29 - With the number of channels **OPERABLE** less than required by the Minimum Channels **OPERABLE** requirement, effluent releases via this pathway may continue provided grab samples are analyzed for gross radioactivity (beta or gamma) at the **LOWER LIMIT OF DETECTION** defined in Table 4.11-1:

a. At least once per 12 hours when the specific activity of the secondary coolant is greater than 0.01 microcurie/gram **DOSE EQUIVALENT I-131.**

b. At least once per 48 hours when the specific activity of the secondary coolant is less than or equal to 0.01 microcurie/gram **DOSE EQUIVALENT I-131.**

ACTION 30 - With the number of channels **OPERABLE** less than required by the Minimum Channels **OPERABLE** requirement, effluent releases via this pathway may continue provided the flow rate is estimated at least once per 4 hours during actual releases. Pump performance curves may be used to estimate flow.

TABLE 4.3-12
RADIOACTIVE LIQUID EFFLUENT MONITORING INSTRUMENTATION

INSTRUMENT	CHANNEL CHECK	SOURCE CHECK	CHANNEL CALIBRATION	CHANNEL FUNCTIONAL TEST
1. GROSS RADIOACTIVITY MONITORS PROVIDING ALARM AND AUTOMATIC TERMINATION OF RELEASE				
a. Liquid Radwaste Effluent Line	D	P	R(2)	SA(1)
b. Steam Generator Blowdown Effluent Line	D	P	R(2)	SA(1)
2. FLOW RATE MEASUREMENT DEVICES				
a. Liquid Radwaste Effluent Line	D(3)	NA	R	NA
b. Steam Generator Blowdown Effluent Line	D(3)	NA	R	NA

TABLE 4.3-12 (Continued)

TABLE NOTATION

(1) The **CHANNEL FUNCTIONAL TEST** shall also demonstrate that automatic isolation of this pathway and/or Control Room alarm annunciation occur if the appropriate following condition(s) exists:

1. Instrument indicates measured levels above the alarm or fixed setpoint.
2. Circuit failure.
3. Instrument indicates a downscale failure.

(2) The initial **CHANNEL CALIBRATION** shall be performed using one or more of the reference standards traceable to NIST or using standards that have been obtained from suppliers that participate in measurement assurance activities with NIST. These standards shall permit calibrating the system within its intended range of energy and measurement range. For subsequent **CHANNEL CALIBRATION**, sources that have been related to the initial calibration can be used.

(3) **CHANNEL CHECK** shall consist of verifying indication of flow during periods of release. **CHANNEL CHECK** shall be made at least once per 24 hours during periods in which effluent releases are made.

RADIOACTIVE EFFLUENTS

LIQUID EFFLUENTS:

Concentration

CONTROLS

3.11.1.1 The concentration of radioactive material released in liquid effluents to **UNRESTRICTED AREAS** shall be limited to the concentrations specified in 10 CFR Part 20, Appendix B, Table II, Column 2 for radionuclides other than dissolved or entrained noble gases.

APPLICABILITY: At all times.

ACTION:

a. With the concentration of radioactive material released in liquid effluents to **UNRESTRICTED AREAS** exceeding the above limits, without delay restore the concentration to within the above limits.

b. The provisions of Controls 3.0.3 and 3.0.4 are not applicable.

SURVEILLANCE REQUIREMENTS

4.11.1.1.1 Radioactive liquid wastes shall be sampled and analyzed according to the sampling and analysis program of Table 4.11-1.

4.11.1.1.2 The results of the radioactivity analyses shall be used in accordance with the methodology and parameters in the **ODCM** to assure that the concentrations at the point of release are maintained within the limits of Control 3.11.1.1.

TABLE 4.11-1

RADIOACTIVE LIQUID WASTE SAMPLING AND ANALYSIS PROGRAM

LIQUID RELEASE TYPE	MINIMUM SAMPLING FREQUENCY	ANALYSIS FREQUENCY	TYPE OF ACTIVITY ANALYSIS	LOWER LIMIT OF DETECTION (LLD)[a] (mCi/ml)
A. Batch Waste Releases[b]	P Each Batch	P Each Batch	Principal Gamma Emitters[c]	$5x10^{-7}$
			I-131	$1x10^{-6}$
			Mo-99, Ce-144	$2x10^{-6}$
	P Each Batch	M Composite[d]	H-3	$1x10^{-5}$
			Gross Alpha	$1x10^{-7}$
	P Each Batch	Q Composite[d]	Sr-89, Sr-90	$5x10^{-8}$
B. Turbine Building Sump	M	M	Principal Gamma Emitters[c]	$5x10^{-7}$
			I-131	$1x10^{-6}$
			Mo-99, Ce-144	$2x10^{-6}$

TABLE 4.11-1 (Continued)

TABLE NOTATION

a The LLD is defined, for purposes of these controls, as the smallest concentration of radioactive material in a sample that will yield a net count, above system background, that will be detected with 95% probability with only 5% probability of falsely concluding that a blank observation represents a "real" signal.

For a particular measurement system, which may include radiochemical separation:

$$LLD = \frac{4.66\, s_b}{E \bullet V \bullet 2.22 \times 10^6 \bullet Y \bullet \exp(-\lambda \Delta t)}$$

Where:

LLD is the "a priori" **LOWER LIMIT OF DETECTION** as defined above, as microcuries per unit mass or volume,

s_b is the standard deviation of the background counting rate or of the counting rate of a blank sample as appropriate, as counts per minute,

E is the counting efficiency, as counts per disintegration,

V is the sample size in units of mass or volume,

2.22×10^6 is the number of disintegrations per minute per microcurie,

Y is the fractional radiochemical yield, when applicable,

λ is the radioactive decay constant for the particular radionuclide, and

Δt is the elapsed time between sample collection, or end of the sample collection period, and time of counting.

Typical values of E, V, Y, and Δt should be used in the calculation.

It should be recognized that the LLD is defined as an a priori (before the fact) limit representing the capability of a measurement system and not as an a posteriori (after the fact) limit for a particular measurement.

TABLE 4.11-1 (Continued)

TABLE NOTATION

b Prior to sampling Reactor Coolant Waste and Miscellaneous Waste for analyses, each batch shall be isolated, and then thoroughly mixed to assure representative sampling.

c The principal gamma emitters for which the LLD control applies exclusively are the following radionuclides: Mn-54, Fe-59, Co-58, Co-60, Zn-65, Cs-134, Cs-137 and Ce-141. This list does not mean that only these nuclides are to be considered. Other gamma peaks that are identifiable, together with those of the above nuclides, shall also be analyzed and reported in the Annual Radioactive Effluent Release Report pursuant to Technical Specification 5.6.3.

d A **COMPOSITE SAMPLE** is one in which the quantity of liquid sampled is proportional to the quantity of liquid waste discharged in which the method of sampling employed results in a specimen that is representative of the liquids released.

LIQUID EFFLUENTS:

Dose

CONTROLS

3.11.1.2 The dose or dose commitment to a **MEMBER OF THE PUBLIC** from radioactive materials in liquid effluents released to **UNRESTRICTED AREAS** shall be limited:

a. During any calendar quarter to less than or equal to 3.0 mrems to the total body and to less than or equal to 10 mrems to any organ, and

b. During any calendar year to less than or equal to 6 mrems to the total body and to less than or equal to 20 mrems to any organ.

APPLICABILITY: **At all times.**

ACTION:

a. With the calculated dose from the release of radioactive materials in liquid effluents exceeding any of the above limits, prepare and submit to the Commission pursuant to 10 CFR 50.4 within 30 days a Special Report that identifies the cause(s) for exceeding the limit(s) and defines the corrective **ACTIONS** that have been taken to reduce the releases and the proposed corrective **ACTIONS** to be taken to assure that subsequent releases will be in compliance with the above limits.

b. The provisions of Controls 3.0.3 and 3.0.4 are not applicable.

SURVEILLANCE REQUIREMENTS

4.11.1.2 Cumulative dose contributions from liquid effluents for the current calendar quarter and the current calendar year shall be determined in accordance with the methodology and parameters in the **ODCM** at least once per 31 days.

LIQUID EFFLUENTS:

Liquid Radwaste Processing System

CONTROLS

3.11.1.3 The **LIQUID RADWASTE PROCESSING SYSTEM** shall be used to reduce the radioactive materials in liquid wastes prior to their discharge when the calculated doses due to the liquid effluent to **UNRESTRICTED AREAS** exceeds 0.36 mrem to the total body or 1.20 mrem to any organ in a 92 day period.

APPLICABILITY: At all times.

ACTION:

a. With radioactive liquid waste being discharged without processing and in excess of the above limits, prepare and submit to the Commission pursuant to 10 CFR 50.4 within 30 days a Special Report that includes the following information:

   1. Explanation of why liquid radwaste was being discharged without processing, identification of any inoperable equipment or subsystems, and the reason for the inoperability,

   2. **ACTION**(s) taken to restore the inoperable equipment to **OPERABLE** status, and

   3. Summary description of **ACTION**(s) taken to prevent a recurrence.

b. The provisions of Controls 3.0.3 and 3.0.4 are not applicable.

SURVEILLANCE REQUIREMENTS

4.11.1.3 Doses over a 92-day period due to liquid releases to **UNRESTRICTED AREAS** shall be calculated at least once per 31 days in accordance with the methodology and parameters in the **ODCM**.

GASEOUS EFFLUENTS:

Dose Rate

CONTROLS

3.11.2.1 The dose rate due to radioactive materials released in gaseous effluents from the site to areas at and beyond the **SITE BOUNDARY** (see figure in UFSAR Chapter 1) shall be limited to the following:

a. For noble gases: Less than or equal to 500 mrems/yr to the total body and less than or equal to 3000 mrems/yr to the skin, and

b. For iodine-131 and for all radionuclides in particulate form with half lives greater than 8 days: Less than or equal to 1500 mrems/yr to any organ.

APPLICABILITY: **At all times.**

ACTION:

a. With the dose rate(s) exceeding the above limits, without delay restore the release rate to within the above limit(s).

b. The provisions of Controls 3.0.3 and 3.0.4 are not applicable.

SURVEILLANCE REQUIREMENTS

4.11.2.1.1 The dose rate due to noble gases in gaseous effluents shall be determined to be within the above limits in accordance with the methodology and parameters in the **ODCM**.

4.11.2.1.2 The dose rate due to iodine-131 and all radionuclides in particulate form with half lives greater than 8 days in gaseous effluents shall be determined to be within the above limits in accordance with the methodology and parameters in the **ODCM** by obtaining representative samples and performing analyses in accordance with the sampling and analysis program specified in Table 4.11-2.

TABLE 4.11-2

RADIOACTIVE GASEOUS WASTE SAMPLING AND ANALYSIS PROGRAM

GASEOUS RELEASE TYPE	SAMPLING FREQUENCY	MINIMUM ANALYSIS FREQUENCY	TYPE OF ACTIVITY ANALYSIS	LOWER LIMIT OF DETECTION (LLD)[a] (µCi/ml)
A. Waste Gas Storage Tank	P Each Tank Grab Sample	P Each Tank	Principal Gamma Emitters[b] (Gaseous Emissions Only)	1×10^{-4}
B. Containment Purge and Vent	P Each Batch Grab Sample	P Each Batch	Principal Gamma Emitters[b] (Gaseous Emissions Only)	1×10^{-4}
C. Main Vent	M[c] Grab Sample	M[c]	Principal Gamma Emitters[b] (Gaseous Emissions Only)	1×10^{-4}
	Continuous[d]	M	H-3	1×10^{-6}
	Continuous[d]	W Charcoal Sample[e]	I-131	1×10^{-12}
	Continuous[d]	W Particulate Sample[e]	Principal Gamma Emitters[b] (I-131, others)	1×10^{-11}
	Continuous[d]	M Composite Particulate Sample	Gross Alpha	1×10^{-11}
	Continuous[d]	Q Composite Particulate Sample	Sr-89, Sr90	1×10^{-11}
	Continuous[d]	Noble Gas Monitor	Noble Gases Gross Beta or Gamma	1×10^{-6}
D. Incinerated Oil[g]	P Each Batch[h]	P Each Batch[h]	Principal Gamma Emitters	5×10^{-7}

TABLE 4.11-2 (Continued)

TABLE NOTATION

a The LLD is defined, for purposes of these controls, as the smallest concentration of radioactive material in a sample that will yield a net count, above system background, that will be detected with 95% probability with only 5% probability of falsely concluding that a blank observation represents a "real" signal.

For a particular measurement system, which may include radiochemical separation:

$$LLD = \frac{4.66\, s_b}{E \bullet V \bullet 2.22 \times 10^6 \bullet Y \bullet \exp(-\lambda \Delta t)}$$

Where:

LLD is the "a priori" **LOWER LIMIT OF DETECTION** as defined above, as microcuries per unit mass or volume,

s_b is the standard deviation of the background counting rate or of the counting rate of a blank sample as appropriate, as counts per minute,

E is the counting efficiency, as counts per disintegration,

V is the sample size in units of mass or volume,

2.22×10^6 is the number of disintegrations per minute per microcurie,

Y is the fractional radiochemical yield, when applicable,

λ is the radioactive decay constant for the particular radionuclide, and

Δt for plant effluents is the elapsed time between sample collection or end of the sample collection period, and time of counting.

Typical values of E, V, Y, and Δt should be used in the calculation.

It should be recognized that the LLD is defined as an a priori (before the fact) limit representing the capability of a measurement system and not as an a posteriori (after the fact) limit for a particular measurement.

TABLE 4.11-2 (Continued)

TABLE NOTATION

b The principal gamma emitters for which the LLD control applies exclusively are the following radionuclides: Kr-87, Kr-88, Xe-133, Xe-133m, Xe-135, and Xe-138 for gaseous emissions and Mn-54, Fe-59, Co-58, Co-60, Zn-65, Mo-99, Cs-134, Cs-137, Ce-141 and Ce-144 for particulate emissions. This list does not mean that only these nuclides are to be considered. Other gamma peaks that are identifiable, together with those of the above nuclides, shall also be analyzed and reported in the Annual Radioactive Effluent Release Report pursuant to Technical Specification 5.6.3.

c Sampling and analysis shall also be performed following shutdown, **STARTUP**, or a **THERMAL POWER** change exceeding 15 percent of **RATED THERMAL POWER** within one hour unless (1) analysis shows that the **DOSE EQUIVALENT I-131** concentration in the primary coolant has not increased more than a factor of 5, and (2) the noble gas activity monitor shows that effluent activity has not increased by more than a factor of 5.

d The ratio of the sample flow rate to the sampled stream flow rate shall be known for the time period covered by each dose or dose rate calculation made in accordance with Controls 3.11.2.1, 3.11.2.2 and 3.11.2.3.

e Samples shall be changed at least once per 7 days and analyses shall be completed within 48 hours after changing, or after removal from sampler. When sample collection time is less than seven days, the corresponding LLDs may be increased by a proportional factor.

f Collect sample and analyze daily for total Curie content per Technical Requirements Manual 15.11.2.1 when the Reactor Coolant System specific activity of Xe-133 is greater than 150 uCi/ml.

g Incinerated oil may be discharged via points other than the main vent (e.g., Auxiliary Boiler). Releases shall be accounted for based on pre-release grab sample data.

h Samples for incinerated oil releases shall be collected from and representative of filtered oil in liquid form.

GASEOUS EFFLUENTS:

Dose - Noble Gases

CONTROLS

3.11.2.2 The air dose due to noble gases released in gaseous effluents to areas at and beyond the **SITE BOUNDARY** (see figure in UFSAR Chapter 1) shall be limited to the following:

a. During any calendar quarter: Less than or equal to 10 mrads for gamma radiation and less than or equal to 20 mrads for beta radiation and,

b. During any calendar year: Less than or equal to 20 mrads for gamma radiation and less than or equal to 40 mrads for beta radiation.

APPLICABILITY: **At all times.**

ACTION:

a. With the calculated air dose from radioactive noble gases in gaseous effluents exceeding any of the above limits, prepare and submit to the Commission pursuant to 10 CFR 50.4 within 30 days a Special Report that identifies the cause(s) for exceeding the limit(s) and defines the corrective **ACTIONS** that have been taken to reduce the releases and the proposed corrective **ACTIONS** to be taken to assure that subsequent releases will be in compliance with the above limits.

b. The provisions of Controls 3.0.3 and 3.0.4 are not applicable.

SURVEILLANCE REQUIREMENTS

4.11.2.2 Cumulative dose contributions for the current calendar quarter and current calendar year for noble gases shall be determined in accordance with the methodology and parameters in the **ODCM** at least once per 31 days.

GASEOUS EFFLUENTS:

Dose - Iodine-131 & Radionuclides in Particulate Form

CONTROLS

3.11.2.3 The dose to a **MEMBER OF THE PUBLIC** from iodine-131 and all radionuclides in particulate form with half lives greater than 8 days in gaseous effluents released to areas at and beyond the **SITE BOUNDARY** (see figure in UFSAR Chapter 1) shall be limited to the following:

a. During any calendar quarter: Less than or equal to 15 mrems to any organ and,

b. During any calendar year: Less than or equal to 30 mrems to any organ.

c. Less than 0.1% of the limits of 3.11.2.3(a) and (b) as a result of burning contaminated oil.

APPLICABILITY: At all times.

ACTION:

a. With the calculated dose from the release of iodine-131 and radionuclides in particulate form with half lives greater than 8 days, in gaseous effluents exceeding any of the above limits, prepare and submit to the Commission pursuant to 10 CFR 50.4 within 30 days a Special Report that identifies the cause(s) for exceeding the limit and defines the corrective **ACTIONS** that have been taken to reduce the releases and the proposed corrective **ACTIONS** to be taken to assure that subsequent releases will be in compliance with the above limits.

b. The provisions of Controls 3.0.3 and 3.0.4 are not applicable.

SURVEILLANCE REQUIREMENTS

4.11.2.3 Cumulative dose contributions for the current calendar quarter and the current calendar year for iodine-131 and radionuclides in particulate form with half lives greater than 8 days shall be determined in accordance with the methodology and parameters in the ODCM at least once per 31 days.

GASEOUS EFFLUENTS:

Gaseous Radwaste Processing System

CONTROLS

3.11.2.4 The **GASEOUS RADWASTE PROCESSING SYSTEM** and the **VENTILATION EXHAUST TREATMENT SYSTEM** shall be used to reduce radioactive materials in gaseous waste prior to their discharge when the gaseous effluent air doses due to gaseous effluent releases, to areas at and beyond the **SITE BOUNDARY** (see figure in UFSAR Chapter 1) exceeds 1.20 mrad for gamma radiation and 2.4 mrad for beta radiation in a 92 day period. The **VENTILATION EXHAUST PROCESSING SYSTEM** shall be used to reduce radioactive materials in gaseous waste prior to their discharge when the calculated doses due to gaseous effluent releases, to areas at and beyond the **SITE BOUNDARY** (see figure in UFSAR Chapter 1) exceeds 1.8 mrem to any organ in a 92 day period.

APPLICABILITY: **At all times.**

ACTION:

a. With gaseous waste being discharged without processing and in excess of the above limits, prepare and submit to the Commission pursuant to 10 CFR 50.4 within 30 days a Special Report that includes the following information:

   1. Explanation of why gaseous radwaste was being discharged without processing, identification of any inoperable equipment or subsystems, and the reason for the inoperability,

   2. **ACTION**(s) taken to restore the inoperable equipment to **OPERABLE** status, and

   3. Summary description of **ACTION**(s) taken to prevent a recurrence.

b. The provisions of Controls 3.0.3 and 3.0.4 are not applicable.

SURVEILLANCE REQUIREMENTS

4.11.2.4 Doses over a 92-day period due to gaseous releases shall be calculated at least once per 31 days in accordance with the methodology and parameters in the **ODCM**.

TOTAL DOSE

CONTROLS

3.11.4 The annual (calendar year) dose or dose commitment to any **MEMBER OF THE PUBLIC** due to releases of radioactivity and to radiation from uranium fuel cycle sources shall be limited to less than or equal to 25 mrems to the total body or any organ, except the thyroid, which shall be limited to less than or equal to 75 mrems.

APPLICABILITY: At all times.

ACTION:

a. With the calculated doses from the release of radioactive materials in liquid or gaseous effluents exceeding twice the limits of Control 3.11.1.2.a, 3.11.1.2.b, 3.11.2.2.a, 3.11.2.2.b, 3.11.2.3.a, or 3.11.2.3.b, calculations shall be made including direct radiation contributions from the reactor units and outside storage tanks to determine whether the above limits of Control 3.11.4 have been exceeded. If such is the case, prepare and submit to the Commission pursuant to 10 CFR 50.4 within 30 days a Special Report that defines the corrective **ACTION** to be taken to reduce subsequent releases to prevent recurrence of exceeding the above limits and includes the schedule for achieving conformance with the above limits. This Special Report, as defined in 10 CFR 20.405c, shall include an analysis that estimates the radiation exposure (dose) to a **MEMBER OF THE PUBLIC** from uranium fuel cycle sources, including all effluent pathways and direct radiation, for the calendar year that includes the release(s) covered by this report. It shall also describe levels of radiation and concentrations of radioactive material involved, and the cause of the exposure levels or concentrations. If the estimated dose(s) exceeds the above limits, and if the release condition resulting in violation of 40 CFR Part 190 has not already been corrected, the Special Report shall include a request for a variance in accordance with the provisions of 40 CFR Part 190. Submittal of the report is considered a timely request, and a variance is granted until staff **ACTION** on the request is complete.

b. The provisions of Controls 3.0.3 and 3.0.4 are not applicable.

SURVEILLANCE REQUIREMENTS

4.11.4.1 Cumulative dose contributions from liquid and gaseous effluents shall be determined in accordance with Controls 4.11.1.2, 4.11.2.2, and 4.11.2.3, and in accordance with the methodology and parameters in the **ODCM**.

4.11.4.2 Cumulative dose contributions from direct radiation from the reactor units and outside storage tanks shall be determined in accordance with the methodology and parameters in the **ODCM**. This requirement is applicable only under conditions set forth in Control 3.11.4.a.

RADIOLOGICAL ENVIRONMENTAL MONITORING

PROGRAM

CONTROLS

3.12.1 The radiological environmental monitoring program shall be conducted as specified in Table 3.12-1.

APPLICABILITY: **At all times.**

ACTION:

a. With the radiological environmental monitoring program not being conducted as specified in Table 3.12-1, prepare and submit to the Commission, in the Annual Radiological Environmental Operating Report required by Technical Specification 5.6.2, a description of the reasons for not conducting the program as required and the plans for preventing a recurrence.

b. With the level of radioactivity as the result of plant effluents in an environmental sample at a specified location exceeding the reporting levels of Table 3.12-2, prepare and submit to the Commission pursuant to 10 CFR 50.4 within 30 days after receiving the sample analysis a Special Report that identifies the cause(s) for exceeding the limit(s) and defines the corrective **ACTIONS** to be taken to reduce radioactive effluents so that the potential annual dose* to a **MEMBER OF THE PUBLIC** is less than the calendar year limits of Controls 3.11.1.2, 3.11.2.2, and 3.11.2.3. When more than one of the radionuclides in Table 3.12-2 are detected in the sample this report shall be submitted if:

$$\frac{\text{concentration (1)}}{\text{reporting level (1)}} + \frac{\text{concentration (2)}}{\text{reporting level (2)}} + \ldots \geq 1.0$$

When radionuclides other than those in Table 3.12-2 are detected and are the result of plant effluents, this report shall be submitted if the potential annual dose* to a **MEMBER OF THE PUBLIC** is equal to or greater than the calendar year limits of Controls 3.11.1.2, 3.11.2.2 and 3.11.2.3. This report is not required if the measured level of radioactivity was not the result of plant effluents; however, in such an event, the condition shall be reported and described in the Annual Radiological Environmental Operating Report.

---

* The methodology and parameters used to estimate the potential annual dose to a **MEMBER OF THE PUBLIC** shall be indicated in this report.

c. With fresh leafy vegetable samples unavailable from one or more of the sample locations required by Table 3.12-1, identify locations for obtaining replacement samples and add them to the radiological environmental monitoring program within 30 days. The specific locations from which samples were unavailable may then be deleted from the monitoring program. Pursuant to Technical Specification 5.6.2, identify the cause of the unavailability of samples and identify the new location(s) for obtaining the replacement samples in the next Annual Radiological Environmental Operating Report.

d. The provisions of Controls 3.0.3 and 3.0.4 are not applicable.

SURVEILLANCE REQUIREMENTS

4.12.1 The radiological environmental monitoring samples shall be collected pursuant to Table 3.12-1 from the specific locations given in the table and figure(s) in the **ODCM**, and shall be analyzed pursuant to the requirements of Table 3.12-1 and the detection capabilities required by Table 4.12-1.

TABLE 3.12-1

RADIOLOGICAL ENVIRONMENTAL MONITORING PROGRAM

EXPOSURE PATHWAY AND/OR SAMPLE	NUMBER OF REPRESENTATIVE SAMPLES AND SAMPLE LOCATIONS[a]	SAMPLING AND COLLECTION FREQUENCY	TYPE AND FREQUENCY OF ANALYSIS
1. DIRECT RADIATION[b]	23 routine monitoring stations (DR1 - DR23) either with two or more dosimeters or with one instrument for measuring and recording dose rate continuously, placed as follows: an inner ring of stations, one in each meteorological sector in the general area of the **SITE BOUNDARY** (DR1 - DR09);[f] an outer ring of stations, one in each meteorological sector in the 6- to 8-km range from the site (DR10 - DR18); the remaining stations (DR19 - DR23) to be placed in special interest areas such as population centers, nearby residences, schools, and in 1 area to serve as a control station.	At least Quarterly	Gamma dose at least quarterly

TABLE 3.12-1 (Continued)

RADIOLOGICAL ENVIRONMENTAL MONITORING PROGRAM

EXPOSURE PATHWAY AND/OR SAMPLE	NUMBER OF REPRESENTATIVE SAMPLES AND SAMPLE LOCATIONS[a]	SAMPLING AND COLLECTION FREQUENCY	TYPE AND FREQUENCY OF ANALYSIS
2. AIRBORNE Radioiodine and Particulates	Samples from 5 locations (A1-A5): 3 samples (A1-A3) from close to the 3 SITE BOUNDARY locations, in different sectors of the highest calculated annual average ground-level D/Q.[f] 1 sample (A4) from the vicinity of a community having the highest calculated annual average ground-level D/Q. 1 sample (A5) from a control location, as for example 15-30 km distant and in the least prevalent wind direction.	Continuous sampler operation with sample collection weekly, or more frequently if required by dust loading.	Radioiodine Canister I-131 analysis weekly. Particulate Sampler: Gross beta radioactivity analysis following filter change;[c] Gamma isotopic analysis[d] of composite (by location) quarterly

TABLE 3.12-1 (Continued)

RADIOLOGICAL ENVIRONMENTAL MONITORING PROGRAM

EXPOSURE PATHWAY AND/OR SAMPLE	NUMBER OF REPRESENTATIVE SAMPLES AND SAMPLE LOCATIONS[a]	SAMPLING AND COLLECTION FREQUENCY	TYPE AND FREQUENCY OF ANALYSIS
3. WATERBORNE			
a. Surface	1 sample at intake area (Wa1) 1 sample at discharge area (Wa2)	COMPOSITE SAMPLE over 1-month period[e]	GAMMA ISOTOPIC ANALYSIS[d] monthly. Composite for tritium analysis quarterly
b. Sediment from shoreline	1 sample from downstream area with existing or potential recreational value (Wb1)	Semiannually	GAMMA ISOTOPIC ANALYSIS[d] semiannually

TABLE 3.12-1 (Continued)

RADIOLOGICAL ENVIRONMENTAL MONITORING PROGRAM

EXPOSURE PATHWAY AND/OR SAMPLE	NUMBER OF REPRESENTATIVE SAMPLES AND SAMPLE LOCATIONS[a]	SAMPLING AND COLLECTION FREQUENCY	TYPE AND FREQUENCY OF ANALYSIS
4. INGESTION			
a. Fish and Invertebrates	3 samples of commercially and/or recreationally important species (2 fish species and 1 invertebrate species) in vicinity of plant discharge area (Ia1-Ia3).	Sample in season, or semiannually if they are not seasonal	GAMMA ISOTOPIC ANALYSIS[d] on edible portions
	3 samples of same species in areas not influenced by plant discharge (Ia4-Ia6).		
b. Food Products	Samples of 3 different kinds of broad leaf vegetation grown near the SITE BOUNDARY at 2 different locations of highest predicted annual average ground level D/Q (Ib1-Ib6).[f]	Monthly during growing season	Gamma isotopic[d] and I-131 analysis
	1 sample of each of the similar broad leaf vegetation grown 15-30 km distant in the least prevalent wind direction (Ib7-Ib9).	Monthly during growing season	Gamma isotopic[d] and I-131 analysis

TABLE 3.12-1 (Continued)

TABLE NOTATION

a. The code in parenthesis, e.g., DR1, A1, defines generic sample locations in this control that can be used to identify the specific locations in the map(s) and table in the **ODCM**. Specific parameters of distance and direction sector from the central point between the two containment buildings and additional description where pertinent, is provided for each sample location in Table 3.12-1, and in a table and figure(s) in the **ODCM**. Refer to NUREG-0133, "Preparation of Radiological Effluent Technical Specifications for Nuclear Power Plants, October 1978", and to Radiological Assessment Branch Technical Position, Revision 1, November 1979. Deviations are permitted from the required sampling schedule if specimens are unobtainable due to circumstances such as hazardous conditions, seasonal unavailability, and malfunction of automatic sampling equipment. If specimens are unobtainable due to sampling equipment malfunction, effort shall be made to complete corrective **ACTION** prior to the end of the next sampling period. All deviations from the sampling schedule shall be documented in the Annual Radiological Environmental Operating Report pursuant to Technical Specification 5.6.2. It is recognized that, at times, it may not be possible or practicable to continue to obtain samples of the media of choice at the most desired location or time. In these instances suitable alternative media and locations may be chosen for the particular pathway in question and appropriate substitutions made within 30 days in the radiological environmental monitoring program. Pursuant to Technical Specification 5.6.2, identify the cause of the unavailability of samples for that pathway and identify the new location(s) for obtaining samples in the next Annual Radiological Environmental Operating Report and also include in the report a revised figure(s) and table for the **ODCM** reflecting the new location(s).

TABLE 3.12-1 (Continued)

TABLE NOTATION

b. One or more instruments, such as a pressurized ion chamber, for measuring and recording dose rate continuously may be used in place of, or in addition to, integrating dosimeters. For the purposes of this table, a thermoluminescent dosimeter (TLD) is considered to be one phosphor; two or more phosphors in a packet are considered as two or more dosimeters. Film badges shall not be used as dosimeters for measuring direct radiation. The frequency of analysis or readout for TLD Systems will depend upon the characteristics of the specific system used and should be selected to obtain optimum dose information with minimal fading. Due to the geographical limitations, 9 sectors are monitored around the Calvert Cliffs Nuclear Power Plant.

c. Airborne particulate sample filters shall be analyzed for gross beta radioactivity 24 hours or more after sampling to allow for radon and thoron daughter decay. If gross beta activity in air particulate samples is greater than ten times the yearly mean of control samples, **GAMMA ISOTOPIC ANALYSIS** shall be performed on the individual samples.

d. **GAMMA ISOTOPIC ANALYSIS** means the identification and quantification of gamma-emitting radionuclides that may be attributable to the effluents from the facility.

e. A **COMPOSITE SAMPLE** is one in which the quantity (aliquot) of liquid sampled is proportional to the quantity of flowing liquid and in which the method of sampling employed results in a specimen that is representative of the liquid flow. In this program, **COMPOSITE SAMPLE** aliquots shall be collected at time intervals that are very short (e.g., hourly) relative to the compositing period (e.g., monthly) in order to assure obtaining a representative sample.

f. Exception to these locations is in the South Sector where DR7, A1, 1b4, 1b5, and 1b6 are located approximately 0.7 km from the release point. This location is conservative with respect to the site boundary, which is located approximately 2.1 km from the release point.

TABLE 3.12-2

REPORTING LEVELS FOR RADIOACTIVITY CONCENTRATIONS IN ENVIRONMENTAL SAMPLES

REPORTING LEVELS

ANALYSIS	WATER (pCi/l)	AIRBORNE PARTICULATE OR GASES (pCi/M^3)	FISH & INVERTEBRATES (pCi/kg, wet)	MILK (pCi/l)	FOOD PRODUCTS (pCi/kg, wet)
H-3	20,000[#]				
Mn-54	1,000		30,000		
Fe-59	400		10,000		
Co-58	1,000		30,000		
Co-60	300		10,000		
Zn-65	300		20,000		
Zr-Nb-95	400				
I-131	2	0.9		3	100
Cs-134	30	10	1,000	60	1,000
Cs-137	50	20	2,000	70	2,000
Ba-La-140	200			300	

[#] For drinking water samples. This is a 40 CFR Part 141 value. If no drinking water pathway exists, a value of 30,000 pCi/l may be used.

TABLE 4.12-1

DETECTION CAPABILITIES FOR ENVIRONMENTAL SAMPLE ANALYSIS[a,b]

LOWER LIMIT OF DETECTION (LLD)[c]

ANALYSIS	WATER (pCi/l)	AIRBORNE PARTICULATE OR GASES (pCi/M^3)	FISH & INVERTEBRATES (pCi/kg, wet)	MILK (pCi/l)	FOOD PRODUCTS (pCi/kg, wet)	SEDIMENT (pCi/kg,dry)
Gross Beta	4	0.01				
H-3	2,000#					
Mn-54	15		130			
Fe-59	30		260			
Co-58,60	15		130			
Zn-65	30		260			
Zr-Nb-95	15					
I-131	1[d]	0.07		1	60	
Cs-134	15	0.05	130	15	60	150
Cs-137	18	0.06	150	18	80	180
Ba-La-140	15			15		

If no drinking water pathway exists, a value of 3000 pCi/l may be used.

TABLE 4.12-1 (Continued)

TABLE NOTATION

a This list does not mean that only these nuclides are to be considered. Other peaks that are identifiable, together with those of the above nuclides, shall also be analyzed and reported in the Annual Radiological Environmental Operating Report pursuant to Technical Specification 5.6.2.

b Required detection capabilities for thermoluminescent dosimeters used for environmental measurements shall be in accordance with the recommendations of Regulatory Guide 4.13.

c The LLD is defined, for purposes of these controls, as the smallest concentration of radioactive material in a sample that will yield a net count, above system background, that will be detected with 95% probability with only 5% probability of falsely concluding that a blank observation represents a "real" signal.

For a particular measurement system, which may include radiochemical separation:

$$LLD = \frac{4.66\, s_b}{E \bullet V \bullet 2.22 \bullet Y \bullet \exp(-\lambda \Delta t)}$$

Where:

LLD is the "A priori" **LOWER LIMIT OF DETECTION** as defined above, as picocuries per unit mass or volume,

s_b is the standard deviation of the background counting rate or of the counting rate of a blank sample as appropriate, as counts per minute,

E is the counting efficiency, as counts per disintegration,

V is the sample size in units of mass or volume,

2.22 is the number of disintegrations per minute per picocurie,

Y is the fractional radiochemical yield, when applicable,

λ is the radioactive decay constant for the particular radionuclide, and

TABLE 4.12-1 (Continued)

TABLE NOTATION

Δt for environmental samples is the elapsed time between sample collection, or end of the sample collection period, and time of counting.

Typical values of E, V, Y and Δt should be used in the calculation.

It should be recognized that the LLD is defined as an a priori (before the fact) limit representing the capability of a measurement system and not as an a posteriori (after the fact) limit for a particular measurement. Analyses shall be performed in such a manner that the stated LLDs will be achieved under routine conditions. Occasionally background fluctuations, unavoidable small sample sizes, the presence of interfering nuclides, or other uncontrollable circumstances may render these LLDs unachievable. In such cases, the contributing factors shall be identified and described in the Annual Radiological Environmental Operating Report pursuant to Technical Specification 5.6.2.

d LLD for drinking water samples. If no drinking water pathway exists, the LLD of **GAMMA ISOTOPIC ANALYSIS** may be used.

RADIOLOGICAL ENVIRONMENTAL MONITORING:

LAND USE CENSUS

CONTROLS

3.12.2 A land use census shall be conducted and shall identify within a distance of 8 km (5 miles), the location in each of the 9 meteorological sectors of the nearest milk animal, the nearest residence and the nearest garden* of greater than 50 m^2 (500 ft^2) producing broad leaf vegetation. (For elevated releases as defined in Regulatory Guide 1.111, Revision 1, July 1977, the land use census shall also identify within a distance of 5 km (3 miles) the locations in each of the 9 meteorological sectors of all milk animals and all gardens of greater than 50 m^2 producing broad leaf vegetation).

APPLICABILITY: **At all times.**

ACTION:

a. With a land use census identifying a location(s) that yields a calculated dose or dose commitment greater than the values currently being calculated in Control 4.11.2.3, identify the new location(s) in the next Annual Radiological Environmental Operating Report, pursuant to Technical Specification 5.6.2.

b. With a land use census identifying a location(s) that yields a calculated dose or dose commitment (via the same exposure pathway) 20 percent greater than at a location from which samples are currently being obtained in accordance with Control 3.12.1, add the new location(s) to the radiological environmental monitoring program within 30 days. The sampling location(s), excluding the control station location, having the lowest calculated dose or dose commitment(s), via the same exposure pathway, may be deleted from this monitoring program after October 31 of the year in which this land use census was conducted. Pursuant to Technical Specification 5.6.2, identify the new location(s) in the next Annual Radiological Environmental Operating Report and also include in the report a revised figure(s) and table for the ODCM reflecting the new location(s).

c. The provisions of Controls 3.0.3 and 3.0.4 are not applicable.

SURVEILLANCE REQUIREMENTS

4.12.2 The land census shall be conducted during the growing season at least once per 12 months using that information that will provide the best results, such as by a door-to-door survey, aerial survey, or by consulting local agriculture authorities. The results of the land use census shall be included in the Annual Radiological Environmental Operating Report pursuant to Technical Specification 5.6.2.

---

* Broad leaf vegetation sampling of at least three different kinds of vegetation may be performed at the SITE BOUNDARY in each of two different direction sectors with the highest predicted D/Qs in lieu of the garden census. Specifications for broad leaf vegetation sampling in Table 3.12-1.4b shall be followed, including analysis of control samples.

RADIOLOGICAL ENVIRONMENTAL MONITORING:

INTERLABORATORY COMPARISON PROGRAM

CONTROLS

3.12.3 Analyses shall be performed on all radioactive materials, supplied as part of an Interlaboratory Comparison Program that has been approved by the Commission, that correspond to samples required by Table 3.12-1.

APPLICABILITY: At all times.

ACTION:

a. With analyses not being performed as required above, report the corrective ACTIONS taken to prevent a recurrence to the Commission in the Annual Radiological Environmental Operating Report pursuant to Technical Specification 5.6.2.

b. The provisions of Controls 3.0.3 and 3.0.4 are not applicable.

SURVEILLANCE REQUIREMENTS

4.12.3 The Interlaboratory Comparison Program shall be described in the ODCM. A summary of the results obtained as part of the above required Interlaboratory Comparison Program shall be included in the Annual Radiological Environmental Operating Report pursuant to Technical Specification 5.6.2.

PART 5.0 : CALCULATIONAL METHODOLOGIES

RADIOACTIVE LIQUID EFFLUENTS

RELEASE PATHWAYS [B527]

1. Introduction

   a) Radioactive liquid waste generated as a result of operating the Calvert Cliffs Nuclear Power Plant (CCNPP) may be released to the Chesapeake Bay[1].

   b) There are three pathways by which waste water, non-radioactive and radioactive, may be discharged from the site to the bay:

      (1) Outfall 001,

      (2) Outfall 003,

      (3) Outfall 004.

   c) A diagram which shows the location of each outfall is included as Attachment 1.

2. Outfall 001

   a) Water from the Chesapeake Bay is pumped through the condensers and is discharged to the Chesapeake Bay through the circulating water discharge conduits, known as outfall 001.

   b) The liquid radioactive waste is mixed with and diluted by the circulating water prior to exiting the discharge conduit.

   c) The circulating water discharge conduit extends 850 feet into the Chesapeake bay.

   d) The circulating water discharge conduit may accept liquid radioactive waste from various sources. Sources which may contribute radioactive material to the circulating water discharge conduit are tabulated in Attachment 2.

3. Outfalls 003 and 004

   a) There are two other potential pathways for the release of radioactive liquids to the bay. These pathways are designated outfall outfall 003 and outfall 004.

   b) Sources which could potentially contribute radioactive material to each of these outfalls are tabulated in Attachment 2.

   c) Outfall 002 was modified in 2001 to be discharged via outfall 001.

4. Unmonitored release paths not shown on Attachment 3 should be evaluated and added to the ODCM as necessary.

---

[1] The federal controls and administrative limits associated with the release of radioactive materials from CCNPP are discussed elsewhere in this document.

5. Safety evaluations have been conducted for operating the following systems after they have become contaminated:

a) component cooling water system

(1) In accordance with applicable safety evaluations (Ref. 22), continued operation of this system is allowed as long as the concentration of radionuclides in the component cooling water system is less than 3,000 MPCs.

b) plant heating system

(1) In accordance with applicable safety evaluations (Ref. 24 and Ref. 28), continued operation of this system is allowed as long as the concentration of radionuclides in the plant heating system is less than 0.3 MPCs.

c) auxiliary boiler system

(1) In accordance with applicable safety evaluations (Ref. 27 and Ref. 30) continued operation of this system is allowed as long as the concentration of radionuclides in the auxiliary boiler steam drum is less than 96 MPCs.

d) demineralized water system

(1) In accordance with applicable safety evaluations (Ref. 25 and Ref. 31), continued operation of this system is allowed as long as the concentration of radionuclides in the demineralized water system is less than 0.3 MPCs.

e) service water system

(1) In accordance with applicable safety evaluations (Ref. 26 and Ref. 32), continued operation of this system is allowed as long as the concentration of radionuclides in the service water system is less than 0.1 MPCs.

f) condensate storage tank

(1) In accordance with applicable safety evaluations (Ref. 33), continued operation of this system is allowed as long as the concentration of radionuclides in the condensate storage tank is less than 1.0 MPCs.

TYPES OF LIQUID RELEASES

1. Liquid radwaste discharges have been classified as **CONTINUOUS** or **BATCH** as shown on Attachment 2.

PROCESSING EQUIPMENT

1. Simplified Flow Diagram

   a) An overview of the liquid waste processing system, including major equipment and (normal) flow paths, is outlined on Attachment 4.

   b) There is no processing equipment for wastes discharged through outfalls 003 and 004; however, the waste shall be analyzed for radioactivity in accordance with the analysis frequencies contained in approved CHEMISTRY SECTION procedures.

2. Modifications

   a) Licensee initiated major changes to the Liquid Radioactive Waste System shall be reported to the Commission in the Radioactive Effluent Release Report for the period in which the modification to the waste system is completed. The discussion of each change shall contain:

      (1) A description of the equipment, components and processes involved; and

      (2) Documentation of the fact that the change, including the safety analysis, was reviewed and found acceptable by the onsite review function.

      The report shall also include changes to the ODCM, in accordance with Technical Specification 5.6.3.

   b) A "major" change or modification includes, but is not limited, to the removal or permanent bypass of any of the following:

      (1) degassifier

      (2) reactor coolant waste receiver tank

      (3) reactor coolant waste monitor tank

      (4) letdown filter

      (5) reactor coolant waste ion exchanger

      (6) miscellaneous waste ion exchanger

      (7) miscellaneous waste filter

      (8) miscellaneous waste receiver tank

      (9) miscellaneous waste monitor tank

      (10) evaporator

3. Detailed Description

a) A detailed description of the liquid waste processing system is beyond the scope of the ODCM.

b) For more information on the Miscellaneous Liquid Waste Processing System see FSAR and System Description SD-071A, "Miscellaneous Liquid Waste Processing System Description."

c) For more information on the Reactor Coolant Waste Processing System see System Description SD-071B, "Reactor Coolant Waste Processing System Description."

d) For more information see the Updated Final Safety Analysis Report, Chapter 11, "Waste Processing And Radiation Protection."

LIQUID EFFLUENT RADIATION MONITOR ALARM AND FIXED SETPOINTS

1. Liquid Waste Discharge Radiation Monitor (0-RE-2201)

a) General description

(1) number of radiation elements: one

(2) type of radiation element: in-line scintillation detector

(3) output: analog

(4) radiation indicator: 0-RI-2201

(5) units for radiation indicator: counts per minute

(6) supplier: Westinghouse

b) Functions of 0-RE-2201

(1) continuously measure the activity contained in liquid waste discharge line (Control 3.3.3.10)

(2) continuously indicate (via 0-RI-2201) the activity of liquids contained in liquid waste discharge line (Control 3.3.3.10)

(3) alarm (via 0-RI-2201) prior to exceeding 10 CFR 20, Appendix B, Table II, Column 2 limits (per Control 3.11.1.1)

(4) automatically terminate discharges from the liquid waste processing system by closing the discharge isolation valves (MWS-2201-CV, and MWS-2202-CV) whenever the radiation indicator (0-RI-2201) exceeds the fixed setpoint.

c) **OPERABILITY** of 0-RE-2201

(1) This monitor shall be operable (or have **OPERABILITY**) when it is capable of performing its specified function(s)

(2) The functions of 0-RE-2201 are listed in paragraph (b) above.

d) Monitors equivalent to 0-RE-2201

(1) There are no equivalent monitors for 0-RE-2201.

e) Radiological effluent controls for 0-RE-2201

(1) Liquid waste discharges via this pathway may continue if any one of the following two conditions are satisfied (per Control 3.3.3.10).

(a) The liquid waste discharge monitor, 0-RE-2201, is operable and the alarm-with-automatic-termination setpoint for this monitor is set to ensure the concentrations of radioactive materials released in liquid effluents to **UNRESTRICTED AREAS** are less than the concentrations specified in 10 CFR 20, Appendix B, Table II, Column 2, or

(b) two independent samples are analyzed in accordance with Control 4.11.1.1.1; AND at least two technically qualified members of the Facility Staff independently verify the release rate calculations; AND two qualified operators verify the discharge valve line up.

f) Surveillances for 0-RE-2201

(1) Control 4.3.3.10 requires demonstrating the **OPERABILITY** of 0-RE-2201 by satisfying the checks, calibrations, and tests listed below:

(a) **CHANNEL CHECK** within the past 24 hours

(b) **SOURCE CHECK** prior to each release

(c) **CHANNEL CALIBRATION** within the past 18 months

(d) **CHANNEL FUNCTIONAL TEST** within the past 6 six months

g) Setpoints for 0-RI-2201

(1) There are three radiation alarm setpoints associated with, or otherwise related to, the liquid waste discharge monitor.

(a) 0-RI-2201 fixed high radiation alarm and automatic termination setpoint

(b) 0-RI-2201 adjustable plant computer high radiation alarm and manual termination setpoint

(c) 0-RI-2201 low radiation alarm setpoint

(2) In order to simplify the setpoint terminology, eliminate ambiguity, and minimize the possibility of misinterpretation, the ODCM will refer to these setpoints as follows:

(a) The 0-RI-2201 fixed high radiation alarm and automatic termination setpoint will be referred to as the fixed setpoint.

(b) The 0-RI-2201 adjustable plant computer high radiation alarm and manual termination setpoint will be referred to as the adjustable setpoint.

(c) The 0-RI-2201 low radiation alarm setpoint will be referred to as the low setpoint.

(3) Each of these alarm setpoints is described below.

h) Fixed setpoint for 0-RI-2201

(1) General information

(a) This setpoint is not adjusted for each release.

(b) Whenever the fixed setpoint is exceeded, discharges from the liquid waste processing system will be automatically suspended.

(c) The fixed setpoint corresponds to the maximum concentration of radionuclides allowed in liquid waste discharged from the liquid waste processing system.

(d) The current value for the fixed setpoint is specified in the CCNPP Alarm Manual.

(e) The CCNPP Alarm Manual refers to this alarm and fixed setpoint as the 0-RI-2201 Liquid Waste Discharge High Alarm.

(f) The fixed setpoint is integral to the liquid release discharge monitor, as purchased from the supplier.

(g) The fixed setpoint is administratively controlled by EN-1-100.

(h) The fixed setpoint shall be calculated as described below[1].

(2) Calculating the fixed setpoint for 0-RI-2201

(a) The fixed setpoint for 0-RI-2201 shall be calculated as follows:

---

[1] Per Control 3.3.3.10.

FIXED SETPOINT FOR 0-RI-2201

$$S_{fix} \leq K_{sf}\{(F_d / F_u)\Sigma[(A_{iLn})(e_i)] + Bkg\} \quad \text{Eq. 1L}^{1}$$

S_{fix} = the fixed setpoint for 0-RI-2201 (cpm)

K_{sf} = a constant, actually a safety factor, which is the ratio of the CCNPP activity limit to the 10 CFR 20 MPC limit (unitless)

The safety factor chosen shall be less than or equal to 1.00. This ensures the fixed setpoint is always less than or equal to the limits of 10 CFR 20.

A safety factor of 1.00 will yield a fixed setpoint which corresponds to 1.0 MPC.

A safety factor of 0.500 will yield a fixed setpoint which corresponds to 0.5 MPCs.

It is recommended that a safety factor of 0.5 be used for calculating the fixed setpoint, however, other values--not to exceed 1.00--may be used as directed by the General Supervisor Chemistry.

The use of a "safety margin" is in accordance with the provisions of NUREG-0133, section 4.1.1, which states, "The alarm and trip setpoints ... should correspond to a value(s) which represents a safe margin of assurance that the instantaneous liquid release limit of 10 CFR Part 20 is not exceeded."

This safety margin will prevent minor fluctuations in the nominal circulating water flow rate (and other statistical aberrations) from adversely impacting the calculated fixed setpoint.

F_d = the dilution water flow rate (gpm) prior to the point of release to **UNRESTRICTED AREAS**

The dilution water flow rate is actually the sum of the minimum circulating water flow rate, the minimum salt water flow rate, and the maximum undiluted radwaste flow rate.

The dilution water flow rate shall be calculated in accordance with equation 2L.

---

1 This formula has been derived from NUREG-0133, Addendum, page AA-1.

DILUTION WATER FLOW RATE

$$F_d = F_{cw} + F_{sw} + F_u \qquad \text{Eq. 2L}$$

F_{cw} = the minimum circulating water system flow rate necessary to conduct liquid releases

A minimum of two circulating water pumps (one circulating water pump per conduit accepting radwaste) shall be operable when discharging liquid radwaste -- via this monitor -- to outfall 001.

Additional circulating water pumps may be required as specified in approved Chemistry Procedures.

If a release of liquid radwaste is to be conducted using less than minimum circulating water flow rate necessary to conduct liquid releases, then the release shall not be allowed until a new setpoint has been calculated and entered into 0-RI-2201 (unless the existing setpoint is conservative), or otherwise comply with the **ACTION** requirements of Control 3.3.3.10.

F_{sw} = the minimum salt water system flow rate necessary to release liquid radwaste

If the minimum salt water flow rate available for liquid releases is unknown, difficult to predict, or may decrease during a liquid release, a minimum salt water flow rate of 0 gpm should be used when calculating the fixed setpoint.

If a release of liquid radwaste is to be conducted using less than the minimum salt water flow rate necessary to conduct liquid releases, the release shall not be allowed until a new setpoint has been calculated and entered into 0-RI-2201 (unless the existing setpoint is conservative), or otherwise comply with the **ACTION** requirements of Control 3.3.3.10.

F_u = maximum undiluted radwaste flow rate (gpm)

Values of maximum undiluted radwaste flow rates for various waste streams are tabulated in Attachment 2.

Since the flow rate of undiluted liquid waste (120 gpm maximum) is insignificant relative to the circulating water flow rate (200,000 gpm per circulating water pump), the flow rate of undiluted liquid waste need not be considered when calculating the dilution water flow rate.

Since the maximum undiluted radwaste flow rate is used for calculating the fixed setpoint, a flow setpoint is not required--for the flow measuring device (0-FE-2199) in the effluent line--to verify compliance with Control 3.3.3.10.

A_{iLn} = specific activity limit for the release of radionuclide, i, to **UNRESTRICTED AREAS** (calculated in accordance with 10 CFR 20, Appendix B, Table II, Note 1 as described below; microcuries per milliliter).

In order to calculate a meaningful and accurate fixed setpoint, the specific radionuclides, i, chosen for calculating the fixed setpoint should correspond to those radionuclides found in **TYPICAL RADWASTE RELEASES** from CCNPP.

Attachment 5 provides further guidance for determining the identity of those radionuclides, i, to be used to calculate a fixed setpoint.

Values for A_{iLn} shall be calculated, as described below, for each radionuclide.

SPECIFIC ACTIVITY LIMIT FOR RADIONUCLIDE i

$$A_{iLn} = (f_i)(A_{TLn}) \quad \text{Eq. 3L}$$

f_i = a fraction which represents the relative activity contribution of nuclide i to the average total effluent activity (unitless)

The average total effluent activity does not include tritium or dissolved and entrained noble gases.

This value may be obtained using the guidance provided on Attachment 5.

A_{TLn} = the sum of the total specific activities of all radionuclides found in a TYPICAL LIQUID RADWASTE RELEASE (microcuries/cm^3)

This value corresponds to 1 MPC.

A_{TLn} shall be calculated as shown below.

TOTAL SPECIFIC ACTIVITY EQUIVALENT TO 1 MPC

$$\Sigma[(f_i)(A_{TLn})/A_{iLt}] = 1 \quad \text{Eq. 4L}^1$$

A_{iLt} = the specific activity limit for radionuclide, i, as obtained from 10 CFR 20, Appendix B, Table II, Column 2 (microcuries/cm^3)

For all the radionuclides found in **TYPICAL RADWASTE EFFLUENTS**, use the value from 10 CFR 20, Appendix B, Table II, Column 2.

1 = the MPC limit (MPCs) for **UNRESTRICTED AREAS**

This value is based on the MPC limit from 10 CFR 20, Table II, Note 1.

e_i = absolute detector efficiency for nuclide, i (cpm/microcuries per milliliter)

The detector efficiency for each radionuclide may be calculated from data collected during calibration of the radiation monitor.

Bkg = an approximation of the detector background prior to initiating the liquid release (cpm)

Instead of using an approximation of the detector background, a value of 0 cpm may be used as the detector background if so desired.

(3) Documenting the fixed setpoint for 0-RI-2201

(a) Whenever the fixed setpoint is calculated, the specific values chosen for each of the parameters shall be documented in accordance with EN-1-100.

(4) Changing the fixed setpoint for 0-RI-2201

---

1 This formula has been derived from 10 CFR 20, Table II, Notes 1, 2, and 3.

(a) If the fixed setpoint calculated in accordance with equation 1L exceeds the maximum range of the monitor, the fixed setpoint shall be adjusted to a value which falls within the normal operating range of the monitor.

(b) The fixed setpoint for 0-RI-2201 may be established at values lower than the maximum allowable setpoint, if desired.

(c) A setpoint change should be initiated whenever any of the parameters identified in equation 1L have changed.

(d) The fixed setpoint should not be changed unless one of the following occurs:

i) the relative activity[1] of any radionuclide in TYPICAL LIQUID EFFLUENTS, f_i, has changed by greater than 10%, and the new radionuclide mixture yields a fixed setpoint which is 10% (or more) lower than the current fixed setpoint,

ii) the minimum dilution water flow rate is not available for a liquid release,

iii) the values listed in 10 CFR 20, Table II, column 2 have changed,

iv) the radiation monitor has been recently calibrated, repaired, or otherwise altered, or

v) the monitor is not conservative in its function (see "Functions of 0-RE-2201" earlier in this section).

(e) EN-1-100 contains the administrative controls associated with changing and approving the fixed setpoint.

---

1 As determined in accordance with Attachment 5.

i) The adjustable setpoint for 0-RI-2201

(1) General information

(a) The adjustable setpoint is calculated and adjusted prior to each release from the liquid waste processing system.

(b) The adjustable setpoint is based on the specific activities of the radionuclides present in the undiluted liquid waste (as determined by radiochemical analysis per Control 4.11.1.1.1).

(c) Whenever the adjustable setpoint is exceeded, discharges from the liquid waste processing system will be manually suspended.

(d) See OI-17C, "Reactor Coolant Waste Processing System", or OI-17D, "Miscellaneous Waste Processing System," for a full list of operator **ACTIONS** taken in response to this alarm.

(e) The adjustable setpoint corresponds to the maximum concentration of radionuclides anticipated or expected in discharges from the liquid waste processing system.

(f) The value for the adjustable setpoint is recorded on the liquid release permit in accordance with CHEMISTRY SECTION procedures.

(g) This alarm is not integral to the liquid release discharge monitor, as purchased from the supplier.

(h) This alarm is generated by the plant computer, which monitors output from 0-RI-2201, and provides an alarm to plant operators when the adjustable setpoint has been exceeded.

(i) A value for the adjustable setpoint shall be calculated prior to each release as shown below.

(2) Calculating the adjustable setpoint for 0-RI-2201

(a) The adjustable setpoint is based on the specific activities of the radionuclides in the undiluted liquid waste (as determined by radiochemical analysis per Control 4.11.1.1.1), and shall be calculated as shown below.

ADJUSTABLE SETPOINT FOR 0-RI-2201

$$S_{adj} \leq 1.50 [\Sigma (A_{iu})(e_i) + Bkg] \quad \text{Eq. 5L}$$

S_{adj} = the adjustable setpoint for 0-RI-2201 (cpm)

1.50 = a constant, actually a safety factor, which allows for fluctuations in radiation monitor response (unitless)

This safety factor helps ensure the release is not unnecessarily terminated due to (1) electronic anomalies which cause spurious monitor responses, (2) statistical fluctuations in disintegration rates, (3) statistical fluctuations in detector efficiencies, (4) errors associated with sample analysis, or (5) errors associated with monitor calibrations.[1]

A_{iu} = specific activity of radionuclide, i, in the undiluted waste stream (microcuries per milliliter)

e_i = absolute detector efficiency for nuclide, i (cpm/microcuries per milliliter)

The detector efficiency for each radionuclide may be calculated from data collected during calibration of the radiation monitor.

Bkg = an approximation of the detector background (cpm)

(3) Documenting the adjustable setpoint for 0-RI-2201

(a) Whenever the adjustable setpoint is calculated, the specific values chosen for each of the variables shall be documented in accordance with approved CHEMISTRY SECTION procedures.

(4) Changing the adjustable setpoint for 0-RI-2201

(a) In all cases, the adjustable setpoint shall be set to a value which is less than or equal to the fixed setpoint.

(b) If the adjustable setpoint exceeds the maximum range of the monitor, the setpoint shall be adjusted to a value which falls within the normal operating range of the monitor.

(c) CHEMISTRY SECTION procedures contain administrative controls associated with calculating and approving an adjustable setpoint.

(d) Whenever 0-RI-2201 is operable, the calculated value for the adjustable setpoint shall be entered into the plant computer prior to each release from the liquid waste processing system.

1 The "analysis errors" and "calibration errors" refer to errors which are within established quality assurance and quality control limits.

(e) Plant Operating Instructions contain administrative controls associated with entering the adjustable setpoint into the plant computer.

j) The low setpoint for 0-RI-2201

(1) This setpoint is integral to the liquid release discharge monitor, as purchased from the supplier.

(2) The current value for the low setpoint is specified in the CCNPP Alarm Manual.

(3) The low setpoint may be used to determine the **OPERABILITY** of this monitor (per Control 4.3.3.10, **CHANNEL FUNCTIONAL TEST**).

(4) The alarm generated by the low setpoint may be used to terminate a release in the event 0-RE-2201 fails (i.e., downscale failure or circuit failure) in accordance with Control 4.3.3.10.

(5) The low setpoint calculations are not described in the ODCM.

(6) Changes to the low setpoint are controlled by EN-1-100.

2. Steam Generator Blowdown Effluent Radiation Monitors (1/2-RE-4095)

a) General description of 1/2-RE-4095

(1) number of radiation elements: one per unit

(2) Type of radiation elements: in-line scintillation detectors

(3) output: analog

(4) Designations for radiation indicators

(a) 1-RI-4095

(b) 2-RI-4095

(5) units for radiation indicator: counts per minute

(6) supplier: Westinghouse

b) Functions of 1/2-RE-4095

(1) continuously measure the activity contained in steam generator blowdown effluent line (Control 3.3.3.10)

(2) continuously indicate (via 1/2-RI-4095) the activity of liquids contained in the steam generator blowdown effluent line (Control 3.3.3.10)

(3) alarm (via 1/2-RI-4095) prior to exceeding 10 CFR 20, Appendix B, Table II, Column 2 limits (per Control 3.11.1.1).

(4) automatically terminate steam generator blowdown releases to **UNRESTRICTED AREAS** when the radiation indicator (1/2-RI-4095) exceeds the fixed setpoint

c) **OPERABILITY** of 1/2-RE-4095

(1) This monitor shall be operable (or have **OPERABILITY**) when it is capable of performing its specified function(s).

(2) The functions of this monitor are listed in section (b) above.

(3) It should be noted that if the steam generator blowdown processing system heat exchangers are bypassed, it is possible for blowdown flow to bypass 1/2-RE-4095. If blowdown flow is allowed to bypass 1/2-RE-4095, the minimum channels **OPERABILITY** requirement of Control 3.3.3.10 may not be satisfied.

d) Monitors equivalent to 1/2-RE-4095

(1) 1/2-RE-4014 is normally considered the PRIMARY MONITOR for measuring activity released via the steam generator blowdown processing system, and 1/2-RE-4095 is normally considered the BACKUP MONITOR for measuring activity released via the steam generator blowdown processing system.

(2) In the event PRIMARY MONITOR (1/2-RE-4014) is inoperable or otherwise unavailable, the BACKUP MONITOR (1/2-RE-4095) may fulfill the measuring, indicating, and alarming functions normally provided by the PRIMARY MONITOR.

(3) 1/2-RE-4014, Steam Generator Blowdown Tank Radiation Monitor is considered to be "equivalent" monitor to 1/2-RE-4095 as specified below.

(4) 1/2-RE-4014, Steam Generator Blowdown Tank Radiation Monitor, may perform measurement, indication, alarm, and isolation functions (see "Functions of 1/2-RE-4014" earlier in this section) which limit the concentration of radioactive materials released to **UNRESTRICTED AREAS** in accordance with Control 3.11.1.1 as long as the following conditions are satisfied:

(a) the **OPERABILITY** of 1/2-RE-4014 must be demonstrated in accordance with Control 4.3.3.10, Table 3.3-13(1b), and

(b) the blowdown ion exchangers are isolated (or the decontamination factors for all radionuclides are verified to be greater than or equal to one for the duration of the release), and

(c) the specific activities of radionuclides in the blowdown tank radiation monitor are representative of the activities of the radionuclides in the blowdown effluent line.

e) Radiological effluent controls for 1/2-RE-4095

(1) Steam generator blowdown releases via this pathway may continue if any one of the following two conditions are satisfied (per Control 3.3.3.10):

(a) A steam generator blowdown monitor (either 1/2-RE-4095 or 1/2-RE-4014) is **OPERABLE** (see "**OPERABILITY** of 1/2-RE-4095"; and "**OPERABILITY** of 1/2-RE-4014" earlier in this section) AND the setpoint for this monitor is set to ensure the concentrations of radioactive materials released in liquid effluents to **UNRESTRICTED AREAS** are less than the concentrations specified in 10 CFR 20, Appendix B, Table II, Column 2, or

(b) a grab sample is collected AND analyzed in accordance with the provisions described below:

i) analysis shall determine EITHER the gross gamma activity gross beta activity of the sample

ii) sampling and analysis shall be completed at least once per 12 hours if the specific activity of the steam generator blowdown is greater than 0.01 microcuries per gram IODINE DOSE EQUIVALENT

iii) sampling and analysis shall be completed at least once per 48 hours if the specific activity of the steam generator blowdown is less than or equal to 0.01 microcuries per gram IODINE DOSE EQUIVALENT

iv) the LOWER LIMITS OF DETECTION (LLDs) for the gross gamma and/or gross beta analyses are in accordance with the LLDs of Control 4.11.1.1.1

f) Surveillances for 1/2-RE-4095

(1) Control 4.3.3.10 requires demonstrating the **OPERABILITY** of 1/2-RE-4095 by satisfying the checks, calibrations, and tests listed below

(a) **CHANNEL CHECK** within the past 24 hours

(b) **SOURCE CHECK** prior to each release

(c) **CHANNEL CALIBRATION** within the past 18 months

(d) **CHANNEL FUNCTIONAL TEST** within the past 6 six months

g) Setpoints for 1/2-RI-4095

(1) There are three radiation alarm setpoints associated with the Steam Generator Blowdown Effluent Radiation Monitor.

(a) 1/2-RI-4095 fixed high radiation alarm and automatic termination setpoint

(b) 1/2-RI-4095 adjustable plant computer high radiation alarm and manual termination setpoint

(c) 1/2-RI-4095 low radiation alarm setpoint

(2) In order to simplify the setpoint terminology, eliminate ambiguity, and minimize the possibility of misinterpretation, the ODCM will refer to these setpoints as follows:

(a) The 1/2-RI-4095 fixed high radiation alarm and automatic termination setpoint will be referred to as the fixed setpoint.

(b) The 1/2-RI-4095 adjustable plant computer high radiation alarm and manual termination setpoint will be referred to as the adjustable setpoint.

(c) The 1/2-RI-4095 low radiation alarm setpoint will be referred to as the low setpoint.

(3) Each of these alarm setpoints are described below.

h) The fixed setpoint for 1/2-RI-4095

(1) General information

(a) The fixed setpoint is not adjusted for each release.

(b) Whenever the fixed setpoint is exceeded, discharges from the steam generator blowdown processing system to **UNRESTRICTED AREAS** will be automatically suspended.

(c) The fixed setpoint corresponds to the maximum concentration of radionuclides allowed in liquid waste discharged from the steam generator blowdown processing system.

(d) The current value for the fixed setpoint is specified in the CCNPP Alarm Manual.

(e) The CCNPP Alarm Manual refers to this setpoint as the 1/2-RI-4095 Steam Generator Blowdown Recovery High Alarm.

(f) This setpoint is integral to the steam generator blowdown discharge monitor, as purchased from the manufacturer.

(g) The fixed setpoint is administratively controlled by EN-1-100.

(h) The fixed setpoint shall be calculated as described below[1].

(2) Calculating the fixed setpoint for 1/2-RI-4095

(a) The fixed setpoint for 1/2-RI-4095 shall be calculated in accordance with equation 1L.

FIXED SETPOINT FOR 1/2-RI-4095

$$S_{fix} \leq K_{sf} \{ (F_d/F_u) \Sigma [(A_{iLn}) (e_i)] + Bkg \} \qquad \text{Eq. 1L}^2$$

S_{fix} = the fixed setpoint for 1/2-RI-4095 (cpm)

K_{sf} = a constant, actually a safety factor, which is the ratio of the CCNPP activity limit to the 10 CFR 20 MPC limit (unitless)

The safety factor chosen shall be less than or equal to 1.00. This ensures the fixed setpoint is always less than or equal to the limits of 10 CFR 20.

A safety factor of 1.00 will yield a fixed setpoint which corresponds to 1.0 MPC.

A safety factor of 0.500 will yield a fixed setpoint which corresponds to 0.5 MPCs.

It is recommended that a safety factor of 0.5 be used for calculating the fixed setpoint, however, other values--not to exceed 1.00--may be used as directed by the General Supervisor Chemistry.

The use of a "safety margin" is in accordance with the provisions of NUREG-0133, section 4.1.1, which states, "The alarm and trip setpoints ... should correspond to a value(s) which represents a safe margin of assurance that the instantaneous liquid release limit of 10 CFR Part 20 is not exceeded."

---

1 Per Control 3.3.3.10.

2 Equation 1L has been derived from NUREG-0133, Addendum, page AA-1.

This safety margin will prevent minor fluctuations in the nominal circulating water flow rate (and other statistical aberrations) from adversely impacting the calculated fixed setpoint.

F_d = the dilution water flow rate (gpm) prior to the point of release to **UNRESTRICTED AREAS**

the dilution water flow rate is actually the sum of the minimum circulating water flow rate, the minimum salt water flow rate, and the maximum undiluted radwaste flow rate.

The dilution water flow rate shall be calculated in accordance with equation 2L.

DILUTION WATER FLOW RATE

$$F_d = F_{cw} + F_{sw} + F_u \qquad \text{Eq. 2L}$$

F_{cw} = the minimum circulating water system flow rate necessary to conduct liquid releases

A minimum of two circulating water pumps (one circulating water pump per conduit accepting radwaste) shall be operable when discharging liquid radwaste -- via this monitor -- to outfall 001.

The flow rate of each circulating water pump is 200,000 gallons per minute.

Additional circulating water pumps may be required as specified in approved CHEMISTRY SECTION procedures.

If a release of liquid radwaste from the steam generator blowdown system is to be conducted using less than minimum circulating water flow rate necessary to conduct liquid releases, the release shall not be allowed until a new setpoint has been calculated and entered into 1/2-RI-4095 (unless the existing setpoint is conservative), or otherwise comply with the **ACTION** requirements of Control 3.3.3.10.

F_{sw} = the minimum salt water system flow rate necessary to release liquid radwaste

If the minimum salt water flow rate available for liquid releases is unknown, difficult to predict, or may decrease during a liquid release, a minimum salt water flow rate of 0 gpm should be used when calculating the fixed setpoint.

The maximum flow rate for one salt water pump is listed on Attachment 2.

If a release of liquid radwaste is to be conducted using less than the minimum salt water flow rate necessary to conduct liquid releases, the release shall not be allowed until a new setpoint has been calculated and entered into 1/2-RI-4095 (unless the existing setpoint is conservative), or otherwise comply with the **ACTION** requirements of Control 3.3.3.10.

F_u = maximum undiluted radwaste flow rate (gpm)

Values of maximum undiluted radwaste flow rates for various waste streams are tabulated in Attachment 2.

Since the steam generator blowdown flow rate (225 gpm maximum) is insignificant relative to the circulating water flow rate (200,000 gpm per circulating water pump), the steam generator blowdown flow rate need not be considered when calculating the dilution water flow rate.

Since the maximum undiluted radwaste flow rate is used for calculating the fixed setpoint, a flow setpoint is not required--for the flow measuring device in the effluent line--to verify compliance with Control 3.3.3.10.

A_{iLn} = specific activity limit for the release of radionuclide, i, to **UNRESTRICTED AREAS** (calculated in accordance with 10 CFR 20, Appendix B, Table II, Note 1 as described below; microcuries per milliliter)

In order to calculate a meaningful and accurate fixed setpoint, the specific radionuclides, i, chosen for calculating the fixed setpoint should correspond to those radionuclides found in **TYPICAL RADWASTE RELEASES** from CCNPP.

Attachment 5 provides further guidance for determining which radionuclides, i, should be used to calculate a fixed setpoint.

Values for A_{iLn} shall be calculated, as described below, for each radionuclide.

SPECIFIC ACTIVITY LIMIT FOR EACH RADIONUCLIDE i

$$A_{iLn} = (f_i)(A_{TLn}) \qquad \text{Eq. 3L}$$

f_i = a fraction which represents the relative activity contribution of nuclide i to the average total effluent activity (unitless)

The average total effluent activity does not include tritium or dissolved and entrained noble gases.

This value may be obtained using the guidance provided on Attachment 5.

e_i = absolute detector efficiency for nuclide, i (cpm/microcuries per milliliter)

The detector efficiency for each radionuclide may be calculated from data collected during calibration of the radiation monitor.

A_{TLn} = the sum of the total specific activities of all radionuclides found in a TYPICAL LIQUID RADWASTE RELEASE (microcuries/cm^3)

This value corresponds to 1 MPC.

A_{TLn} shall be calculated as shown below.

TOTAL SPECIFIC ACTIVITY EQUIVALENT TO 1 MPC

$$\Sigma[(f_i)(A_{TLn})/A_{iLt}] = 1 \qquad \text{Eq. 4L}^1$$

A_{iLt} = the specific activity limit for radionuclide, i, as obtained from 10 CFR 20, Appendix B, Table II, Column 2 (microcuries/cm^3)

For all the radionuclides found in **TYPICAL RADWASTE EFFLUENTS**, use the value from 10 CFR 20, Appendix B, Table II, Column 2.

1 = the MPC limit (MPCs) for **UNRESTRICTED AREAS**

This value is based on the MPC limit from 10 CFR 20, Table II, Note 1.

Bkg = an approximation of the detector background (cpm)

Instead of using an approximation of the detector background, a value of 0 cpm may be used as the detector background if so desired.

---

(3) Documenting the fixed setpoint for 1/2-RI-4095

(a) Whenever the fixed setpoint is calculated, the specific values chosen for each of the variables shall be documented in accordance with EN-1-100.

(4) Changing the fixed setpoint for 1/2-RI-4095

(a) If the fixed setpoint calculated in accordance with equation 1L exceeds the maximum range of the monitor, the fixed setpoint shall be adjusted to a value which falls within the normal operating range of the monitor.

(b) The fixed setpoint may be established at values lower than the maximum allowable setpoint, if desired.

(c) A setpoint change should be initiated whenever any of the parameters identified in equation 1L have changed.

---

[1] This formula has been derived from 10 CFR 20, Table II, Notes 1, 2, and 3.

(d) The fixed setpoint should not be changed unless one of the following occurs:

i) the relative activity[1] of any radionuclide in TYPICAL LIQUID EFFLUENTS has changed by greater than 10%, and the new radionuclide mixture yields a fixed setpoint which is 10% (or more) lower than the current fixed setpoint,

ii) the minimum dilution water flow rate is not available for a liquid release,

iii) the values listed in 10 CFR 20, Table II, column 2 have changed,

iv) the radiation monitor has been recently calibrated, repaired, or otherwise altered, or

v) the monitor is not conservative in its function (see "Functions of 1/2-RE-4095" earlier in this section).

(e) EN-1-100 contains the administrative controls associated with changing and approving the fixed setpoint.

i) The adjustable setpoint for 1/2-RI-4095

(1) General information

(a) The adjustable setpoint is calculated and adjusted prior to each release from the steam generator blowdown processing system.

(b) The adjustable setpoint is based on the specific activities of the radionuclides present in the undiluted liquid waste (as determined by radiochemical analysis per Control 4.11.1.1.1).

(c) Whenever the adjustable setpoint is exceeded, discharges from the steam generator blowdown processing system will be manually suspended.

(d) See OI-8A for a full list of operator actions taken in response to this alarm.

(e) The adjustable setpoint corresponds to the maximum concentration of radionuclides anticipated or expected in discharges from the steam generator blowdown processing system.

(f) The value for the adjustable setpoint is recorded on the liquid release permit in accordance with CHEMISTRY SECTION procedures.

(g) This alarm is not integral to the steam generator blowdown effluent monitor, as purchased from the supplier.

(h) This alarm is generated by the plant computer which monitors output from 1/2-RI-4095, and provides an alarm to plant operators when the adjustable setpoint has been exceeded.

(i) A value for the adjustable setpoint shall be calculated prior to each release as shown below.

(2) Calculating the adjustable setpoint for 1/2-RI-4095

(a) The adjustable setpoint is based on the specific activities of radionuclides in the undiluted liquid waste (as determined by radiochemical analysis per Control 4.11.1.1.1), and shall be calculated as shown below.

ADJUSTABLE SETPOINT FOR 1/2-RI-4095

$$S_{adj} \leq 2.50\,[\Sigma\,(A_{iu})\,(e_i) + Bkg] \qquad \text{Eq. 5L}^2$$

Where,

S_{adj} = the adjustable setpoint for 1/2-RI-4095 (cpm)

2.50 = a constant, actually a safety factor, which allows for fluctuation in radiation monitor response (unitless)

This safety factor helps ensure the release is not unnecessarily terminated due to (1) electronic anomalies which cause spurious monitor responses, (2) statistical fluctuations in disintegration rates, (3) statistical fluctuations in detector efficiencies, (4) errors associated with sample analysis, or (5) errors associated with monitor calibrations.[3]

A_{iu} = specific activity of radionuclide, i, in the undiluted waste stream (microcuries per milliliter)

e_i = absolute detector efficiency for nuclide, i (cpm/microcuries per milliliter)

The detector efficiency for each radionuclide may be calculated from data collected during calibration of the radiation monitor.

Bkg = an approximation of the detector background prior to initiating the liquid release (cpm)

(3) Documenting the adjustable setpoint, 1/2-RI-4095

(a) Whenever the adjustable setpoint is calculated, the specific values chosen for each of the variables shall be documented in accordance with approved CHEMISTRY SECTION procedures.

1 As determined in accordance with Attachment 5.
2 This formula may be derived from NUREG-0133, Addendum, page AA-1.
3 The "analysis errors" and "calibration errors" refer to errors which are within established quality assurance and quality control limits.

(4) Changing the adjustable setpoint for 1/2-RI-4095

(a) If the adjustable setpoint exceeds the maximum range of the monitor, the setpoint shall be adjusted to a value which falls within the normal operating range of the monitor.

(b) In all cases, the adjustable setpoint shall be set to a value which is less than or equal to the fixed setpoint.

(c) Chemistry procedures contain administrative controls associated with calculating and approving an adjustable setpoint.

(d) Whenever 1/2-RI-4095 is operable, the calculated value for the adjustable setpoint shall be entered into the plant computer prior to each release from the steam generator blowdown processing system.

(e) Plant Operating Instructions (e.g., OI-8A) contain administrative controls associated with entering the adjustable setpoint in the plant computer.

j) The low setpoint for 1/2-RI-4095

(1) This alarm is integral to the steam generator blowdown effluent monitor, as purchased from the manufacturer.

(2) The current value for the low alarm setpoint is specified in the CCNPP Alarm Manual.

(3) The low alarm setpoint may be used to determine **OPERABILITY** of this monitor (per Control 4.3.3.10, **CHANNEL FUNCTIONAL TEST**).

(4) The low alarm setpoint may be used to terminate a release in the event 1/2-RE-4095 fails (i.e., downscale failure or circuit failure).

(5) Changes to the low alarm setpoint are controlled by EN-1-100.

(6) The ODCM does not address the calculations associated with the low alarm setpoint.

3. Steam Generator Blowdown Tank Radiation Monitors (1/2-RE-4014)

a) General description of 1/2-RE-4014

(1) number of radiation elements: one per unit

(2) Type of radiation element: off-line scintillation detector

(3) output: analog

(4) Designations for radiation indicators

(a) 1-RI-4014

(b) 2-RI-4014

(5) units for radiation indicator: counts per minute

(6) supplier: Westinghouse

(7) A 3 gallon per minute sample is cooled, passed through the detector, and pumped back into the steam generator blowdown tank.

b) Functions of 1/2-RE-4014

(1) continuously measure the activity contained in an off-line sample of the steam generator blowdown tank (Control 3.3.3.10)

(2) continuously indicate (via 1/2-RI-4014) the specific activity in an off-line sample of the steam generator blowdown tank (Control 3.3.3.10)

(3) alarm (via 1/2-RI-4014) prior to exceeding the 10 CFR 20, Appendix B, Table II, Column 2 limits (per Control 3.11.1.1)

(4) automatically terminate steam generator blowdown releases to **UNRESTRICTED AREAS** when the radiation indicator (1/2-RI-4014) exceeds the fixed alarm setpoint.

c) **OPERABILITY** of 1/2-RE-4014

(1) This monitor shall be operable (or have **OPERABILITY**) when it is capable of performing its specified function(s)

(2) The functions of this monitor are listed in section (b) above.

d) Monitors equivalent to 1/2-RE-4014

(1) 1/2-RE-4014 is normally considered the PRIMARY MONITOR for measuring activity released via the steam generator blowdown processing system, and 1/2-RE-4095 is normally considered the BACKUP MONITOR for measuring activity released via the steam generator blowdown processing system.

(2) In the event PRIMARY MONITOR (1/2-RE-4014) is inoperable or otherwise unavailable, the BACKUP MONITOR (1/2-RE-4095) may fulfill the measuring, indicating, and alarming functions normally provided by the PRIMARY MONITOR.

(3) 1/2-RE-4095, Steam Generator Blowdown Effluent Radiation Monitor, performs measurement, indication, alarm, and isolation functions equivalent to 1/2-RE-4014 (see "Function of 1/2-RE-4014" earlier in this section), unless 1/2-RE-4095 is bypassed as described below.

(4) It should be noted that if the steam generator blowdown processing system heat exchangers are bypassed, it is possible for blowdown flow to bypass 1/2-RE-4095 (the steam generator blowdown effluent radiation monitor). If blowdown flow is allowed to bypass 1/2-RE-4095, the minimum channels **OPERABILITY** requirement of Control 3.3.3.10 may not be satisfied (unless 1/2-RE-4014 is operable).

e) Radiological effluent controls for 1/2-RE-4014

(1) Steam generator blowdown releases via this pathway may continue if any one of the following two conditions are satisfied (per Control 3.3.3.10):

(a) A steam generator blowdown monitor (either 1/2-RE-4095 or 1/2-RE-4014) is **OPERABLE** (see "**OPERABILITY** of 1/2-RE-4095"; and "**OPERABILITY** of 1/2-RE-4014" earlier in this section) AND the alarm setpoint for this monitor is set to ensure the concentrations of radioactive materials released in liquid effluents to **UNRESTRICTED AREAS** are less than the concentrations specified in 10 CFR 20, Appendix B, Table II, Column 2, or

(b) a grab sample is collected AND analyzed in accordance with the provisions described below:

i) analysis shall determine EITHER the gross gamma activity or gross beta activity of the sample

ii) sampling and analysis shall be completed at least once per 12 hours if the specific activity of the steam generator blowdown is greater than 0.01 microcuries per gram IODINE DOSE EQUIVALENT

iii) sampling and analysis shall be completed at least once per 48 hours if the specific activity of the steam generator blowdown is less than or equal to 0.01 microcuries per gram IODINE DOSE EQUIVALENT

iv) the LOWER LIMITS OF DETECTION for the gross gamma and/or gross beta analyses are in accordance with the LLDs of Control 4.11.1.1.1

f) Surveillances for 1/2-RE-4014

(1) Control 4.3.3.10 requires demonstrating the **OPERABILITY** of 1/2-RE-4014 by satisfying the checks, calibrations, and tests listed below

(a) **CHANNEL CHECK** within the past 24 hours

(b) **SOURCE CHECK** prior to each release

(c) **CHANNEL CALIBRATION** within the past 18 months

(d) **CHANNEL FUNCTIONAL TEST** within the past 6 six months

g) Setpoints for 1/2-RI-4014

(1) There are three radiation alarm setpoints associated with the Steam Generator Blowdown Tank Radiation Monitor.

(a) 1/2-RI-4014 fixed high radiation alarm and automatic termination setpoint

(b) 1/2-RI-4014 adjustable plant computer high radiation alarm and manual termination setpoint

(c) 1/2-RI-4014 low radiation alarm setpoint

(2) In order to simplify the setpoint terminology, eliminate ambiguity, and minimize the possibility of misinterpretation, the ODCM will refer to these setpoints as follows:

(a) The 1/2-RI-4014 fixed high radiation alarm and automatic termination setpoint will be referred to as the fixed setpoint.

(b) The 1/2-RI-4014 adjustable plant computer high radiation alarm and manual termination setpoint will be referred to as the adjustable setpoint.

(c) The 1/2-RI-4014 low radiation alarm setpoint will be referred to as the low setpoint.

(3) Each of these alarms is described below.

h) The fixed setpoint for 1/2-RI-4014

(1) General Information

(a) The fixed setpoint is not adjusted for each release.

(b) Whenever the fixed setpoint is exceeded, discharges from the steam generator blowdown processing system to **UNRESTRICTED AREAS** will be automatically suspended.

(c) The fixed setpoint corresponds to the maximum concentration of radionuclides allowed in liquid waste discharged from the steam generator blowdown processing system.

(d) The current value for the fixed setpoint is specified in the CCNPP Alarm Manual.

(e) The CCNPP Alarm Manual refers to the fixed setpoint as the 1/2-RI-4014 Steam Generator Blowdown High Alarm.

(f) The fixed setpoint is integral to the liquid release discharge monitor, as purchased from the manufacturer.

(g) The fixed setpoint is administratively controlled by EN-1-100.

(h) The fixed setpoint shall be calculated as described below[1].

(2) Calculating the fixed setpoint for 1/2-RI-4014

(a) The fixed setpoint for 1/2-RI-4014 shall be calculated as follows:

[1] Per Control 3.3.3.10.

FIXED SETPOINT FOR 1/2-RI-4014

$$S_{fix} \leq K_{sf}\{(F_d / F_u)\Sigma[(A_{ILn})(e_i)] + Bkg\} \quad \text{Eq. 1L}^1$$

Where,

S_{fix} = the fixed setpoint for 1/2-RI-4014 (cpm)

K_{sf} = a constant, actually a safety factor, which is the ratio of the CCNPP activity limit to the 10 CFR 20 MPC limit (unitless)

The safety factor chosen shall be less than or equal to 1.00. This ensures the fixed setpoint is always less than or equal to the limits of 10 CFR 20.

A safety factor of 1.00 will yield a fixed setpoint which corresponds to 1.0 MPC.

A safety factor of 0.500 will yield a fixed setpoint which corresponds to 0.5 MPCs.

It is recommended that a safety factor of 0.5 be used for calculating the fixed setpoint, however, other values--not to exceed 1.00--may be used as directed by the General Supervisor Chemistry.

The use of a "safety margin" is in accordance with the provisions of NUREG-0133, SECTION 4.1.1, which states, "The alarm and trip setpoints ... should correspond to a value(s) which represents a safe margin of assurance that the instantaneous liquid release limit of 10 CFR Part 20 is not exceeded."

This safety margin will prevent minor fluctuations in the nominal circulating water flow rate (and other statistical aberrations) from adversely impacting the calculated fixed setpoint.

F_d = the dilution water flow rate (gpm) prior to the point of release to **UNRESTRICTED AREAS**

The dilution water flow rate is actually the sum of the minimum circulating water flow rate, the minimum salt water flow rate, and the maximum undiluted radwaste flow rate.

The dilution water flow rate shall be calculated in accordance with equation 2L.

---

1 Equation 1L has been derived from NUREG-0133, Addendum, page AA-1.

DILUTION WATER FLOW RATE

$$F_d = F_{cw} + F_{sw} + F_u \qquad \text{Eq. 2L}$$

F_{cw} = the minimum circulating water system flow rate necessary to conduct liquid releases

A minimum of two circulating water pumps (one circulating water pump per conduit accepting radwaste) shall be operable when discharging liquid radwaste -- via this monitor -- to outfall 001.

The flow rate of each circulating water pump is 200,000 gallons per minute.

Additional circulating water pumps may be required as specified in approved CHEMISTRY SECTION procedures.

If a release of liquid radwaste from the steam generator blowdown system is to be conducted using less than minimum circulating water flow rate necessary to conduct liquid releases, the release shall not be allowed until a new setpoint has been calculated and entered into 1/2-RI-4014 (unless the existing setpoint is conservative), or otherwise comply with the **ACTION** requirements of Control 3.3.3.10.

F_{sw} = the minimum salt water system flow rate necessary to release liquid radwaste

If the minimum salt water flow rate available for liquid releases is unknown, difficult to predict, or may decrease during a liquid release, a minimum salt water flow rate of 0 gpm should be use when calculating the fixed setpoint.

The maximum flow rate for one salt water pump is listed on Attachment 2.

If a release of liquid radwaste is to be conducted using less than the minimum salt water flow rate necessary to conduct liquid releases, the release shall not be allowed until a new setpoint has been calculated and entered into 1/2-RI-4014 (unless the existing setpoint is conservative), or otherwise comply with the **ACTION** requirements of Control 3.3.3.10.

F_u = maximum undiluted radwaste flow rate (gpm)

Values of maximum undiluted radwaste flow rates for various waste streams are tabulated in Attachment 2.

Since the steam generator blowdown flow rate (225 gpm maximum) is insignificant relative to the circulating water flow rate (200,000 gpm per circulating water pump), the steam generator blowdown flow rate need not be considered when calculating the dilution water flow rate.

Since the maximum undiluted radwaste flow rate is used for calculating the fixed setpoint, a flow setpoint is not required--for the flow measuring device in the effluent line--to verify compliance with Control 3.3.3.10.

A_{iLn} = specific activity limit for the release of radionuclide, i, to **UNRESTRICTED AREAS** (calculated in accordance with 10 CFR 20, Appendix B, Table II, Note 1 as described below; microcuries per milliliter)

In order to calculate a meaningful and accurate fixed setpoint, the specific radionuclides, i, chosen for calculating the fixed setpoint should correspond to those radionuclides found in **TYPICAL RADWASTE RELEASES** from CCNPP.

Attachment 5 provides further guidance for determining which radionuclides, i, should be used to calculate a fixed setpoint. An acceptable alternative is to assume an isotopic mix which results in a more conservative setpoint.

Values for A_{iLn} shall be calculated, as described below, for each radionuclide.

SPECIFIC ACTIVITY LIMIT FOR RADIONUCLIDE, i

$$A_{iLn} = (f_i)(A_{TLn}) \qquad \text{Eq. 3L}$$

f_i = a fraction which represents the relative activity contribution of nuclide i to the average total effluent activity (unitless)

The average total effluent activity does not include tritium or dissolved and entrained noble gases.

This value may be obtained using the guidance provided on Attachment 5.

A_{TLn} = the sum of the total specific activities of all radionuclides found in a TYPICAL LIQUID RADWASTE RELEASE (microcuries/cm^3)

This value corresponds to 1 MPC.

Calculate the value of A_{TLn} as shown below.

TOTAL SPECIFIC ACTIVITY CORRESPONDING TO 1 MPC AT THE SITE BOUNDARY

$$\Sigma[(f_i)(A_{TLn})/A_{iLt}] = 1 \qquad \text{Eq. 4L}^1$$

A_{iLt} = the specific activity limit for radionuclide, i, as obtained from 10 CFR 20, Appendix B, Table II, Column 2 (microcuries/cm^3)

For all the radionuclides found in **TYPICAL RADWASTE EFFLUENTS**, use the value from 10 CFR 20, Appendix B, Table II, Column 2.

---

1 This formula has been derived from 10 CFR 20, Table II, Notes 1, 2, and 3.

1 = the MPC limit (MPCs) for **UNRESTRICTED AREAS**

This value is based on the MPC limit from 10 CFR 20, Table II, Note 1.

e_i = absolute detector efficiency for nuclide, i (cpm/microcuries per milliliter)

The detector efficiency for each radionuclide may be calculated from data collected during calibration of the radiation monitor.

Bkg = an approximation of the detector background (cpm)

Instead of using an approximation of the detector background, a value of 0 cpm may be used as the detector background if so desired.

---

(3) Documenting the fixed setpoint for 1/2-RI-4014

(a) Whenever the fixed setpoint is calculated, the specific values chosen for each of the variables shall be documented in accordance with EN-1-100.

(4) Changing the fixed setpoint for 1/2-RI-4014

(a) If the fixed setpoint calculated in accordance with equation 1L exceeds the maximum range of the monitor, the fixed setpoint shall be adjusted to a value which falls within the normal operating range of the monitor.

(b) The fixed setpoint may be established at values lower than the maximum allowable setpoint, if desired.

(c) A setpoint change should be initiated whenever any of the parameters identified in equation 1L (identified in this section of the ODCM) have changed.

(d) The fixed setpoint should not be changed unless one of the following occurs:

i) the relative activity[1] of any radionuclide in TYPICAL LIQUID EFFLUENTS has changed by greater than 10%, and the new radionuclide mixture yields a fixed setpoint which is 10% (or more) lower than the current fixed setpoint,

ii) the minimum dilution water flow rate is not available for a liquid release,

iii) the values listed in 10 CFR 20, Table II, column 2 have changed,

---

[1] As determined in accordance with Attachment 5.

iv) the radiation monitor has been recently calibrated, repaired, or otherwise altered, or

v) the monitor is not conservative in its function (see "Functions of 1/2-RE-4014" earlier in this section).

(e) EN-1-100 contains the administrative controls associated with changing and approving the fixed setpoint.

i) The adjustable setpoint for 1/2-RI-4014

(1) General information

(a) The adjustable setpoint is calculated and adjusted prior to each release from the steam generator blowdown processing system.

(b) The adjustable setpoint is based on the specific activities of the radionuclides present in the undiluted liquid waste (as determined by radiochemical analysis per Control 4.11.1.1.1).

(c) Whenever the adjustable setpoint is exceeded, discharges from the steam generator blowdown processing system will be manually suspended.

(d) See OI-8A for a full list of operator **ACTIONS** taken in response to this alarm.

(e) The adjustable setpoint corresponds to the maximum concentration of radionuclides anticipated or expected in discharges from the steam generator blowdown processing system.

(f) The value for the adjustable setpoint is recorded on the liquid release permit in accordance with CHEMISTRY SECTION procedures.

(g) This alarm is not integral to the steam generator blowdown tank radiation monitor, as purchased from the supplier.

(h) This alarm is generated by the plant computer which monitors output from 1/2-RI-4014, and provides an alarm to plant operators when the 1/2-RI-4014 adjustable setpoint has been exceeded.

(i) A value for the adjustable setpoint shall be calculated prior to each release as shown below.

(2) Calculating the adjustable setpoint for 1/2-RI-4014

(a) The adjustable setpoint is based on the specific activity of the radionuclides in the undiluted liquid waste (as determined by radiochemical analysis per Control 4.11.1.1.1), and is calculated as shown below.

ADJUSTABLE SETPOINT FOR 1/2-RI-4014

$$S_{adj} \leq 2.50 [\Sigma (A_{iu}) (e_i) + Bkg] \qquad \text{Eq. 5L}^{1}$$

S_{adj} = the adjustable setpoint for 1/2-RI-4014 (cpm)

2.50 = a constant, actually a safety factor, which allows for fluctuation in radiation monitor response (unitless)

This safety factor helps ensure the release is not unnecessarily terminated due to (1) electronic anomalies which cause spurious monitor responses, (2) statistical fluctuations in disintegration rates, (3) statistical fluctuations in detector efficiencies, (4) uncertainties associated with sample analysis, and (5) uncertainties associated with monitor calibrations.[2]

A_{iu} = specific activity of radionuclide, i, in the undiluted waste stream (microcuries per milliliter)

e_i = absolute detector efficiency for nuclide, i (cpm/microcuries per milliliter)

The detector efficiency for each radionuclide may be calculated from data collected during calibration of the radiation monitor.

Bkg = an approximation of the detector background (cpm)

---

(3) Documenting the adjustable setpoint for 1/2-RI-4014

(a) Whenever the adjustable setpoint is calculated, the specific values chosen for each of the variables shall be documented in accordance with approved CHEMISTRY SECTION procedures.

(4) Changing the adjustable setpoint for 1/2-RI-4014

(a) If the adjustable setpoint exceeds the maximum range of the monitor, the setpoint shall be adjusted to a value which falls within the normal operating range of the monitor.

(b) In all cases, the adjustable setpoint shall be set to a value which is less than or equal to the fixed setpoint.

---

1 Equation 5L has been derived from NUREG-0133, Addendum, page AA-1.

2 The "analysis uncertainties" and "calibration uncertainties" refer to uncertainties which are within establis. quality assurance and quality control limits.

(c) Chemistry procedures contain administrative controls associated with calculating and approving an adjustable setpoint.

(d) Whenever 1/2-RI-4014 is operable, the calculated value for the adjustable setpoint shall be entered into the plant computer prior to each release from the steam generator blowdown and processing system.

(e) Plant Operating Instructions (e.g., OI-8A) contain administrative controls associated with entering the adjustable setpoint in the plant computer.

j) The low alarm setpoint for 1/2-RI-4014

(1) This alarm is integral to the steam generator blowdown tank monitor, as purchased from the manufacturer.

(2) The current value for the low alarm setpoint is specified in the CCNPP Alarm Manual.

(3) Changes to the low alarm setpoint are controlled by EN-1-100.

(4) The ODCM does not address the calculations associated with the low alarm setpoint.

LIMITS ON RADIONUCLIDE CONCENTRATIONS IN LIQUID EFFLUENTS

1. Introduction

a) 10 CFR 20, Appendix B, specifies concentration limits associated with the release of radioactive materials to **UNRESTRICTED AREAS**.

b) Radiological effluent controls have been established to implement the requirements of 10 CFR 20.

c) These radiological effluent controls are described below.

2. Radiological Effluent Controls

a) The concentration of radioactive material released in liquid effluents to **UNRESTRICTED AREAS** shall be limited to the concentrations specified in 10 CFR 20, Appendix B, Table II, Column 2 for radionuclides other than dissolved or entrained noble gases (per Control 3.11.1.1).

b) It should be noted that NUREG-0133 specifies that the concentration of radioactive materials in liquid effluents to **UNRESTRICTED AREAS** shall be limited to 2 E-4 microcuries per milliliter for dissolved or entrained noble gases, this control has not been incorporated into the CCNPP Technical Specifications, and as a result, the ODCM does not include calculations for same.

c) The routine surveillances which are performed to verify compliance with these radiological effluent controls are described below.

3. Surveillance Requirements

a) Routine surveillances for **BATCH RELEASES**

(1) Sample each "BATCH" of radioactive liquid waste prior to its release (per Control 4.11.1.1.1).

(2) Determine the concentrations of principle gamma emitters (including, but not limited to, Mn-54, Fe-59, Co-58, Co-60, Zn-65, Cs-134, Cs-137, Ce-141, I-131, Mo-99, and Ce-144) in the "BATCH" sample, prior to the "BATCH" release (per Control 4.11.1.1.1).

(3) Determine the concentration of tritium contained in a monthly **COMPOSITE SAMPLE** at least once per month (per Control 4.11.1.1.1).

(4) Determine the concentrations of Sr-89 and Sr-90 contained in a quarterly **COMPOSITE SAMPLE** at least once per quarter (per Control 4.11.1.1.1).

(5) Calculate the concentrations of radionuclides in the receiving waters at the point the liquid radioactive waste is released to **UNRESTRICTED AREAS** (per Control 4.11.1.1.2).

b) Routine surveillances for **CONTINUOUS RELEASES**

(1) Sample **CONTINUOUS RELEASES** of radioactive liquid waste at least once per month (per Control 4.11.1.1.1).

(2) Determine the concentrations of principle gamma emitters (including, but not limited to, Mn-54, Fe-59, Co-58, Co-60, Zn-65, Cs-134, Cs-137, Ce-141, I-131, Mo-99, and Ce-144) in the undiluted, CONTINUOUS waste stream sample (per Control 4.11.1.1.1).

(3) Calculate the concentrations of radionuclides in the receiving waters at the point the liquid radioactive waste is released to **UNRESTRICTED AREAS** (per Control 4.11.1.1.2).

4. Responsible Plant Organizations

a) The CHEMISTRY SECTION is responsible for performing the sampling, analysis, and calculations required by the above surveillances.

b) The conditions which initiate the required surveillances are contained in the following section.

5. Initiating Conditions

a) The surveillances for **BATCH RELEASES** shall be performed prior to each **BATCH RELEASE**[1] and may be performed more often as specified in approved CHEMISTRY SECTION procedures.

b) The surveillances for **CONTINUOUS RELEASES** shall be performed at least monthly[2] (until the **CONTINUOUS RELEASE** has been terminated) and, if activity is identified[3] in the CONTINUOUS waste stream, the surveillances may be performed more often as specified in approved CHEMISTRY SECTION procedures.

6. Calculation Methodology

a) At CCNPP, there are two methodologies for calculating the concentrations of radionuclides in the receiving waters, at the point of release to **UNRESTRICTED AREAS**, resulting from the discharge of liquid waste.

(1) The rigorous method shall be used IF a computer system and the appropriate software are available.

(2) The simplified method may be used IF a computer system and the appropriate software are NOT available.

(3) These methods, as well as additional supporting information, are presented in the following sections.

b) Rigorous method

(1) Solution of the following equation may prove too rigorous for routine use unless a computer system and appropriate software are available.

(2) If a computer system and the appropriate software are available, ensure the concentrations of radionuclides in **UNRESTRICTED AREAS** are less than one MPC by verifying the following inequality is true:

---

1 Per Control 4.11.1.1.1.
2 Per Control 4.11.1.1.1.
3 The LOWER LIMITS OF DETECTION shall conform to Control 4.11.1.1.1, Table 4.11-1.

LIMIT ON CONCENTRATIONS OF RADIONUCLIDES IN UNRESTRICTED AREAS (RIGOROUS METHOD)

$$(F_u / F_d) \Sigma (A_{iu} / A_{iLt}) \leq 1 \qquad \text{Eq. 6L}^1$$

F_d = the actual dilution water flow rate (gpm) prior to the point of release to **UNRESTRICTED AREAS**

The actual dilution water flow rate is the sum of the circulating water flow rate, the salt water flow rate, and the undiluted radwaste flow rate.

The dilution water flow rate shall be calculated in accordance with equation 2L.

DILUTION WATER FLOW RATE

$$F_d = F_{cw} + F_{sw} + F_u \qquad \text{Eq. 2L}$$

F_{cw} = the actual circulating water system flow rate

The flow rate of each circulating water pump is 200,000 gallons per minute.

F_{sw} = the salt water system flow rate

If the actual salt water flow rate is unknown or otherwise not readily available, a salt water flc rate of 0 gpm may be used in equation 2L.

The maximum flow rate for one salt water pump is listed on Attachment 2.

F_u = actual undiluted radwaste flow rate (gpm)

If the actual undiluted radwaste flow rate is less than 1% of the total dilution water flow rate, an undiluted radwaste flow rate of 0 gpm may be used in equation 2L.

Values of maximum undiluted radwaste flow rates for various waste streams are tabulated in Attachment 2.

A_{iLt} = the specific activity limit for radionuclide, i, as obtained from 10 CFR 20, Appendix B, Table II, Column 2 (*microcuries/cm*^{3})

A_{iu} = the specific activity of nuclide, i, in the undiluted liquid radwaste (microcuries per milliliter)

1 = the MPC limit (MPCs) for **UNRESTRICTED AREAS**

This value is based on the MPC limit from 10 CFR 20, Table II, Note 1.

c) Simplified method

[1] Equation 6L has been derived from 10 CFR 20, Appendix B, Table II, Note 1.

(1) Whenever a computer system and appropriate software are unavailable to perform the rigorous calculations described in the previous section, ensure the concentrations of radionuclides in **UNRESTRICTED AREAS** are less than one MPC by verifying the following inequality is true.

LIMIT ON CONCENTRATIONS OF RADIONUCLIDES IN **UNRESTRICTED AREAS** (SIMPLIFIED METHOD)

$$\{F_u / [(F_d)(A_{I131Lt})(K_{sf})]\} \Sigma A_{iu} \leq 1 \qquad \text{Eq. 7L}^{1}$$

F_u = actual undiluted radwaste flow rate (gpm)

If the actual undiluted radwaste flow rate is less than 1% of the total dilution water flow rate, an undiluted radwaste flow rate of 0 gpm may be used in equation 2L.

Values of maximum undiluted radwaste flow rates for various waste streams are tabulated in Attachment 2.

F_d = the actual dilution water flow rate (gpm) prior to the point of release to **UNRESTRICTED AREAS**.

The actual dilution water flow rate is the sum of the circulating water flow rate, the salt water flow rate, and the undiluted radwaste flow rate.

DILUTION WATER FLOW RATE

$$F_d = F_{cw} + F_{sw} + F_u \qquad \text{Eq. 2L}$$

F_{cw} = the actual circulating water system flow rate

The flow rate of each circulating water pump is 200,000 gallons per minute.

F_{sw} = the actual salt water system flow rate

If the actual salt water flow rate is unknown or otherwise not readily available a salt water flow rate of 0 gpm may be used in equation 2L.

The maximum flow rate for one salt water pump is listed on Attachment 2.

A_{I131Lt} = the specific activity limit for I-131 corresponding to the limiting concentration specified in 10 CFR 20, Appendix B, Table II, Column 2

This value is 3E-7 microcuries per milliliter.

A_{iu} = the specific activity of nuclide, i, in the undiluted liquid radwaste (microcuries per milliliter)

K_{sf} = a constant, actually a safety factor, which is the ratio of the CCNPP activity limit to the activity limit of 10 CFR 20, Appendix B, Table II, Column 2, (unitless) (per Control 3.11.1.1)

The safety factor chosen shall be less than or equal to 1.00. This ensures the activity is always less than or equal to the activity limit of 10 CFR 20, Appendix B, Table II, Column 2.

---

1 This equation has been derived from 10 CFR 20, Appendix B, Table II, Note 1.

A safety factor of 1.00 will yield a activity which corresponds to the 10 CFR 20, Appendix B, Table II, Column 2 activity limit.

A safety factor of 0.500 will yield an activity which corresponds to one-half the activity limit of 10 CFR 20, Appendix B, Table II, Column 2.

It is recommended that a safety factor of 1.0 be used for calculating the activity, however, other values--not to exceed 1.00--may be used as directed by the General Supervisor Chemistry.

The particular value selected for the safety factor is somewhat arbitrary, however a safety factor does provide plant personnel with a degree of administrative control over the use of simplified equations for generating radioactive liquid release permits. This administrative control is designed to minimize the possibility of violating 10 CFR 20, Appendix B, Table II, Column 2 limits whenever simplifying assumptions are used.

The use of a safety factor is consistent with the ALARA philosophy that licensees should make every reasonable effort to maintain radiation exposures, and releases of radioactive materials in effluents to **UNRESTRICTED AREAS**, as low as is reasonably achievable.

This safety factor has been included in equation 7L to account for any potential nonconservatism associated with applying the I-131 MPC limit to all radionuclides identified in the liquid release. Such nonconservatism could conceivable be present whenever radionuclides which have an MPC value higher than the I-131 MPC limit are present in a liquid release.

---

d) Once the rigorous or simplified calculations have been completed, the calculation results are compared to the applicable limits and corrective **ACTIONS** are initiated as described below.

7. Corrective **ACTIONS**

a) CHEMISTRY SECTION surveillance procedures shall contain and/or reference administrative and/or Technical Specification limits for concentration of radionuclides in liquid effluents and shall specify corrective **ACTIONS** to be initiated when these limits are exceeded.

b) Refer to Control 3.11.1.1 for **ACTIONS** to be taken in the event the concentrations of radionuclides in **UNRESTRICTED AREAS** exceed one MPC.

LIMITS ON CUMULATIVE TOTAL BODY DOSES AND CUMULATIVE ORGAN DOSES FOR LIQUID EFFLUENTS

1. Introduction

   a) Appendix I to 10 CFR 50 specifies total body dose limits and organ dose limits associated with the release of radioactive liquids to **UNRESTRICTED AREAS**.

   b) Radiological effluent controls have been established to implement the requirements of 10 CFR 50, Appendix I.

   c) These radiological effluent controls are described below.

2. Radiological Effluent Controls

   a) The total body dose to **MEMBERS OF THE PUBLIC**, from liquid waste discharged to **UNRESTRICTED AREAS**, shall be less than 3 mrems per calendar quarter and 6 mrems per calendar year (Control 3.11.1.2).

   b) The organ doses to **MEMBERS OF THE PUBLIC**, from liquid waste discharged to **UNRESTRICTED AREAS**, shall be less than 10 mrems per calendar quarter and 20 mrems per calendar year (Control 3.11.1.2).

   c) The routine surveillances which are performed to verify compliance with these radiological effluent controls are described below.

3. Surveillance Requirement(s)

   a) Cumulative total body doses to **MEMBERS OF THE PUBLIC** in **UNRESTRICTED AREAS**--for the current calendar month, the calendar quarter, the current calendar year, and the previous 92 days--shall be calculated, in accordance with equation 8L, at least once per 31 days (per Control 4.11.1.2 and 4.11.1.3).

   b) Cumulative organ doses to **MEMBERS OF THE PUBLIC** in **UNRESTRICTED AREAS**--for the current calendar month, the current calendar quarter, the current calendar year, and the previous 92 days--shall be calculated, in accordance with equation 8L, at least once per 31 days (per Control 4.11.1.2 and 4.11.1.3).

4. Responsible Plant Organizations

   a) The CHEMISTRY SECTION is responsible for performing the surveillances, listed above, whenever the appropriate initiating conditions, listed below, are present.

5. Initiating Conditions

a) Perform the surveillances, listed above, at least once per 31 days (per Control 4.11.1.2).

b) For **BATCH RELEASES**, perform the surveillances, listed above, prior to each **BATCH RELEASE** of radioactive liquid waste in accordance with approved CHEMISTRY SECTION procedures.

c) For **CONTINUOUS RELEASES**, perform the surveillances, listed above, at least monthly (until the **CONTINUOUS RELEASE** has been terminated) and, if activity is identified[1] in the CONTINUOUS waste stream, the surveillances may be performed more often as specified in approved CHEMISTRY SECTION procedures.

d) Whenever the correct initiating conditions are present, the calculations required by the above mentioned surveillance(s) shall be completed in accordance with the methodology listed in the next section.

6. Calculation Methodology

a) The cumulative total body dose and the cumulative organ doses (for the current calendar month, current calendar quarter, previous 92 days, and current calendar year) shall be calculated as follows:

CUMULATIVE TOTAL BODY OR ORGAN, o, DOSE FROM LIQUID RELEASES, r

$$D_{ToL} = \Sigma D_{or} \qquad \text{Eq. 8L}$$

D_{ToL} = the sum total of the total body or organ, o, dose for all liquid releases discharged during the applicable time interval

D_{or} = the organ or total body dose resulting from release, r

Calculate the values of D_{or} for each liquid release as described below.

b) At CCNPP, two methods exist for calculating D_{or} (i.e., the total body and organ doses resulting from any single release of radioactive liquid to an **UNRESTRICTED AREA**).

(1) The rigorous method shall be used IF a computer system and the appropriate software are available.

(2) The simplified method may be used IF a computer system and the appropriate software are NOT available.

(3) These methods, as well as additional supporting information, are presented in the following sections.

[1] The LOWER LIMITS OF DETECTION shall conform to Control 4.11.1.1.1, Table 4.11-1.

c) Rigorous method

(1) Solution of the following equation may prove too rigorous for routine use unless a computer system and appropriate software are available.

(2) If a computer system and the appropriate software are available, the dose commitments due to each release of radioactive liquid to an **UNRESTRICTED AREA** shall be calculated in accordance with the following equation:

DOSE TO THE TOTAL BODY OR ORGAN, o, FROM A LIQUID RELEASE (RIGOROUS EQUATION)

$$D_o = \{V_u / [(60)(F_d)]\} \Sigma\{(A_{lu})(C_{lo})\} \qquad \text{Eq. 9L}^1$$

Where,

F_d = actual dilution water flow rate (gpm) prior to the point of release to **UNRESTRICTED AREAS**

The actual dilution water flow rate is the sum of the circulating water flow rate, the salt water flow rate, and the undiluted radwaste flow rate.

The dilution water flow rate shall be calculated in accordance with equation 2L.

DILUTION WATER FLOW RATE

$$F_d = F_{cw} + F_{sw} + F_u \qquad \text{Eq. 2L}$$

F_{cw} = actual circulating water system flow rate

The flow rate of each circulating water pump is 200,000 gallons per minute.

F_{sw} = actual salt water system flow rate

If the actual salt water flow rate is unknown or otherwise not readily available a salt water flow rate of 0 gpm may be used in equation 2L.

The maximum flow rate for one salt water pump is listed on Attachment 2.

F_u = actual undiluted radwaste flow rate (gpm)

If the actual undiluted radwaste flow rate is less than 1% of the total dilution water flow rate, an undiluted radwaste flow rate of 0 gpm may be used in equation 2L.

Values of maximum undiluted radwaste flow rates for various waste streams are tabulated in Attachment 2.

V_u = volume of undiluted radwaste (gallons)

---

1 Equation 9L has been derived from NUREG-0133, 4.3.

A_{iu} = specific activity of nuclide, i, in the undiluted liquid radwaste (microcuries per milliliter)

C_{io} = liquid release dose factor for nuclide, i, and organ, o (mrem/hr per microcurie/ml)

The liquid release dose factors for principal gamma and beta emitters are listed in Attachment 6.

The liquid release dose factors for principal gamma and beta emitters were obtained in accordance with the methodology of NUREG-0133, section 4.3.1 (for salt water sites).

60 = a constant, the number of minutes per hour

(3) In the event a computer system is unavailable, a simplified equation may be used to calculate the total body and organ dose commitments due to individual liquid releases.

(4) The simplified method is presented below.

d) Simplified methods

(1) Whenever a computer system is unavailable to perform the rigorous total body dose calculations described in the previous section, the total body dose commitments--due to each release of radioactive liquid to an **UNRESTRICTED AREA**--may be calculated in accordance with equation 10L.

(2) Whenever a computer system is unavailable to perform the rigorous organ dose calculations described in the previous section, the dose commitments--to the maximum exposed organ, due to each release of radioactive liquid to an **UNRESTRICTED AREA**--may be calculated in accordance with equation 11L.

TOTAL BODY DOSE FROM A LIQUID RELEASE (SIMPLIFIED EQUATION)

$$D_{tb} = \{ [(58.6)(V_u)] / [(K_{sf})(F_d)] \} \sum A_{iu} \qquad \text{Eq. 10L}$$

D_{tb} = dose commitment, to the total body, due to each release of radioactive liquid to an **UNRESTRICTED AREA**

58.6 = a conversion constant which includes:

1) 1.33E4 mrem/hr per microcurie/ml (the total body dose factor for Cs-134)

2) 1.000 hr/60.00 min

3) 1.000 gallons/3.785 liters

V_u = volume of undiluted radwaste (liters)

[1] Equations 10L has been derived from NUREG-0133, 4.3.

K_{sf} = a constant, actually a safety factor, which is the ratio of the CCNPP total body dose limit to the total body dose limit of Control 3.11.1.2, (unitless)

The safety factor chosen shall be less than or equal to 1.00. This ensures the total body dose is always less than or equal to the total body dose limit of Control 3.11.1.2.

A safety factor of 1.00 will yield a total body dose which corresponds to the total body dose limit of Control 3.11.1.2.

A safety factor of 0.500 will yield an total body dose which corresponds to one-half the total body dose limit of Control 3.11.1.2.

It is recommended that a safety factor of 1.0 be used for calculating the total body dose, however, other values--not to exceed 1.00--may be used as directed by the General Supervisor Chemistry.

The particular value selected for the safety factor is somewhat arbitrary, however a safety factor does provide plant personnel with a degree of administrative control over the use of simplified equations for generating radioactive liquid release permits. This administrative control is designed to minimize the possibility of violating Control 3.11.1.2 when simplifying assumptions are used.

The use of a safety factor is consistent with the ALARA philosophy that licensees should make every reasonable effort to maintain radiation exposures, and releases of radioactive materials in effluents to **UNRESTRICTED AREAS**, as low as is reasonably achievable.

This safety factor has been included in equation 10L to account for any potential nonconservatism associated with applying the Cs-134 total body dose conversion factor to all radionuclides identified in the liquid release. Such nonconservatism could conceivable be present whenever radionuclides having a dose conversion factor greater than that of Cs-134 are present in a liquid release.

F_d = actual dilution water flow rate (gpm) prior to the point of release to **UNRESTRICTED AREAS**

The actual dilution water flow rate is the sum of the circulating water flow rate, the salt water flow rate, and the undiluted radwaste flow rate.

The dilution water flow rate shall be calculated in accordance with equation 2L.

DILUTION WATER FLOW RATE

$$F_d = F_{cw} + F_{sw} + F_u \qquad \text{Eq. 2L}$$

F_{cw} = actual circulating water system flow rate

The flow rate of each circulating water pump is 200,000 gallons per minute.

F_{sw} = actual salt water system flow rate

If the actual salt water flow rate is unknown or otherwise not readily available, a salt water flow rate of 0 gpm may be used in equation 2L.

The maximum flow rate for one salt water pump is listed on Attachment 2.

F_u = actual undiluted radwaste flow rate (gpm)

If the actual undiluted radwaste flow rate is less than 1% of the total dilution water flow rate, an undiluted radwaste flow rate of 0 gpm may be used in equation 2L.

Values of maximum undiluted radwaste flow rates for various waste streams are tabulated in Attachment 2.

A_{iu} = specific activity of nuclide, i, in the undiluted liquid radwaste (microcuries per milliliter)

DOSE TO THE ORGAN, o, FROM A LIQUID RELEASE (SIMPLIFIED EQUATION)

$$D_o = \{ [(449)(V_u)] / [(K_{sf})(F_d)] \} \sum A_{iu} \qquad \text{Eq. 11L}^{1}$$

D_o = the dose commitment to the maximum exposed ORGAN due to each release of radioactive liquid waste to an **UNRESTRICTED AREA**

449 = a conversion constant which includes:

1) 1.02E5 mrem/hr per microcurie/ml (the dose factor for I-131 to the thyroid)
2) 1.000 hr/60.00 min
3) 1.000 gallons/3.785 liters

V_u = volume of undiluted radwaste (liters)

K_{sf} = a constant, actually a safety factor, which is the ratio of the CCNPP organ dose limit to the organ dose limit of Control 3.11.1.2, (unitless)

---

1 Equations 11L has been derived from NUREG-0133, 4.3.

The safety factor chosen shall be less than or equal to 1.00. This ensures the organ dose is always less than or equal to the organ dose limit of Control 3.11.1.2.

A safety factor of 1.00 will yield a organ dose which corresponds to the organ dose limit of Control 3.11.1.2.

A safety factor of 0.500 will yield an organ dose which corresponds to one-half the organ dose limit of Control 3.11.1.2.

It is recommended that a safety factor of 1.0 be used for calculating the organ dose, however, other values--not to exceed 1.00--may be used as directed by the General Supervisor Chemistry.

The particular value selected for the safety factor is somewhat arbitrary, however a safety factor does provide plant personnel with a degree of administrative control over the use of simplified equations for generating radioactive liquid release permits. This administrative control is designed to minimize the possibility of violating Control 3.11.1.2 when simplifying assumptions are used.

The use of a safety factor is consistent with the ALARA philosophy that licensees should make every reasonable effort to maintain radiation exposures, and releases of radioactive materials in effluents to **UNRESTRICTED AREAS**, as low as is reasonably achievable.

This safety factor has been included in equation 11L to account for any potential nonconservatism associated with applying the I-131 thyroid dose conversion factor to all radionuclides identified in the liquid release. Such nonconservatism could conceivable be present whenever radionuclides having a dose conversion factor greater than that of I-131 are present in a liquid release.

F_d = dilution water flow rate (gpm) prior to the point of release to **UNRESTRICTED AREAS**

The actual dilution water flow rate is the sum of the circulating water flow rate, the salt water flow rate, and the undiluted radwaste flow rate.

The dilution water flow rate shall be calculated in accordance with equation 2L.

DILUTION WATER FLOW RATE

$$F_d = F_{cw} + F_{sw} + F_u \qquad \text{Eq. 2L}$$

F_{cw} = actual circulating water system flow rate

The flow rate of each circulating water pump is 200,000 gallons per minute.

F_{sw} = salt water system flow rate

If the actual salt water flow rate is unknown or otherwise not readily available, a salt water flow rate of 0 gpm may be used in equation 2L.

The maximum flow rate for one salt water pump is listed on Attachment 2.

F_u = actual undiluted radwaste flow rate (gpm)

If the actual undiluted radwaste flow rate is less than 1% of the total dilution water flow rate, an undiluted radwaste flow rate of 0 gpm may be used in equation 2L.

Values of maximum undiluted radwaste flow rates for various waste streams are tabulated in Attachment 2.

A_{iu} = specific activity of nuclide, i, in the undiluted liquid radwaste (microcuries per milliliter)

7. Corrective **ACTIONS**

a) CHEMISTRY SECTION surveillance procedures shall contain and/or reference administrative and/or Control limits for cumulative total body doses or cumulative organ doses resulting from liquid effluents and shall specify corrective actions to be initiated when these limits are exceeded.

b) Refer to Control 3.11.1.2 for actions to be taken in the event the calculated cumulative total body dose exceeds 3 mrem per calendar quarter or 6 mrem per calendar year.

c) Refer to Control 3.11.1.2 for actions to be taken in the event the calculated cumulative organ dose--for any organ--exceeds 10 mrem per calendar quarter or 20 mrem per calendar year.

LIMITS FOR THE LIQUID WASTE PROCESSING SYSTEM

1. Introduction

a) 10 CFR 50.36a requires licensees to maintain and use the equipment installed in the liquid waste processing system for the purpose of controlling effluents to the environment.

b) Radiological effluent controls have been established to implement the requirements of 10 CFR 50.36a.

c) Different documents (e.g., Technical Specifications or NUREG-0472) may reference this effluent control using a variety of synonyms. Examples of some of these synonyms include terms such as the PROJECTED DOSE, the 92-DAY PROJECTED DOSE, the 92-DAY CUMULATIVE DOSE, the DOSE IN A 92-DAY PERIOD, or the DOSE FOR THE PREVIOUS 92 DAYS. The ODCM methodology for calculating this dose – by whatever name – is based on a simple sum of the dose contributions for the previous 92 days. As result, all the terms listed above are considered as equivalent quantities for purposes of this effluent control at CCNPP. For simplicity, the ODCM generally uses the phrase "dose for the previous 92 days" when referencing this effluent control.

d) These radiological effluent controls are described below.

2. Radiological Effluent Controls

a) The liquid radwaste processing system shall be used to reduce the quantity of radioactive materials in liquid waste released to the environment whenever the total body dose to **MEMBERS OF THE PUBLIC**, from liquid waste discharged to **UNRESTRICTED AREAS**, is greater than 0.36 mrem for the previous 92 days (per Control 3.11.1.3).

b) The liquid radwaste processing system shall be used to reduce the quantity of radioactive materials in liquid waste released to the environment whenever the organ doses to **MEMBERS OF THE PUBLIC**, from liquid waste discharged to **UNRESTRICTED AREAS**, is greater than 1.20 mrem for the previous 92 days (per Control 3.11.1.3).

c) The routine surveillances which are performed to verify compliance with this radiological effluent controls are described below.

3. Surveillance Requirement(s)

a) The previous 92-day, cumulative, total body dose--to **MEMBERS OF THE PUBLIC** in **UNRESTRICTED AREAS**--shall be calculated, as described in the ODCM, at least once per 31 days (per Control 4.11.1.3).

b) The previous 92-day, cumulative, organ doses--to **MEMBERS OF THE PUBLIC** in **UNRESTRICTED AREAS**--shall be calculated, as described in the ODCM, at least once per 31 days (per Control 4.11.1.3).

c) The CCNPP organization(s) responsible for performing these surveillances are identified in the next section.

4. Responsible Plant Organization(s)

a) The CHEMISTRY SECTION is responsible for performing the surveillances, listed above, whenever the appropriate initiating conditions, listed below, are present.

5. Initiating Conditions

a) Perform the surveillances, listed above, at least once per 31 days (per Control 4.11.1.3).

b) For **BATCH RELEASES**, perform the surveillances, listed above, prior to each **BATCH RELEASE** of radioactive liquid waste in accordance with approved CHEMISTRY SECTION procedures.

c) For **CONTINUOUS RELEASES**, perform the surveillances, listed above, at least monthly (until the **CONTINUOUS RELEASE** has been terminated) and, if activity is identified[1] in the CONTINUOUS waste stream, the surveillances may be performed more often as specified in approved CHEMISTRY SECTION procedures.

d) Whenever the correct initiating conditions are present, the calculations required by the above mentioned surveillance(s) shall be completed in accordance with the methodology contained in the following section.

6. Calculation Methodology

a) The cumulative total body dose and the cumulative organ doses for the previous 92 days shall be calculated in accordance with equation 8L found in the section, "Limits On Cumulative Total Body Doses And Cumulative Organ Doses For Liquid Effluents", found elsewhere in the ODCM.

7. Corrective **ACTIONS**

a) CHEMISTRY SECTION surveillance procedures shall contain/and or reference administrative and/or Control limits for cumulative total body doses or cumulative organ doses resulting from liquid effluents and shall specify corrective **ACTIONS** to be initiated when these limits are exceeded.

b) Refer to Control 3.11.1.3 for **ACTIONS** to be taken in the event the calculated cumulative total body dose exceeds 0.36 mrem for the previous 92 days.

c) Refer to Control 3.11.1.3 for **ACTIONS** to be taken in the event the calculated cumulative organ dose--for any organ--exceeds 1.2 mrem for the previous 92 days.

---

1 The LOWER LIMITS OF DETECTION shall conform to Control 4.11.1.1.1, Table 4.11-1.

RADIOACTIVE GASEOUS EFFLUENTS

RELEASE PATHWAYS [B527]

1. Introduction

a) Radioactive gaseous waste generated from operation of CCNPP may be released to the atmosphere.

b) By design (i.e., in the absence of primary-to-secondary leaks), there are 2 pathways by which waste gas from the site may be discharged to the atmosphere. These pathways are listed below. General information related to each of these potential release pathways is contained on Attachment 7.

(1) Unit 1 main vent stack

(2) Unit 2 main vent stack

c) Depending on plant conditions, (e.g., primary-to-secondary leaks) a potential exists for the release of radioactive materials from other pathways. Examples of these pathways are listed below. General information related to each of these potential release pathways is contained on Attachment 8.

(1) auxiliary boiler deaerator

(2) steam generator atmospheric steam dump system

(3) plant nitrogen system

(4) turbine building ventilation exhaust

(5) emergency air lock

(6) plant compressed air

(7) main steam line penetrations

(8) containment equipment hatch

(9) auxiliary feed pumps

(10) gland steam exhaust condenser

d) All of these pathways are described below.

2. Unit 1 Main Vent Stack

a) Dilution air and radioactive gaseous waste are discharged to the atmosphere through the Unit 1 main vent stack.

b) The radioactive gaseous waste is mixed with and diluted by the outside air and building exhausts prior to exiting the Unit 1 main vent stack.

c) The Unit 1 main vent stack is secured to the Unit 1 reactor containment building.

d) The top of the Unit 1 main vent stack is at elevation 203.5 feet (mean sea level, MSL), and as such is 10.1 feet above the top of the reactor containment building dome. As a result, the Unit 1 main vent stack does not qualify as a "free-standing" stack greater than 80 meters tall[1].

e) The Unit 1 main vent stack is designed to accept gaseous radioactive waste from various sources. Sources which may contribute radioactive material to the Unit 1 main vent stack are tabulated in Attachment 7.

3. Unit 2 Main Vent Stack

a) Dilution air and radioactive gaseous waste are discharged to the atmosphere through the Unit 2 main vent stack.

b) The Unit 2 main vent stack is designed to accept radioactive gaseous waste from various sources.

c) The radioactive gaseous waste is mixed with and diluted by the outside air and building exhausts prior to exiting the Unit 2 main vent stack.

d) The Unit 2 main vent stack is secured to the Unit 2 reactor containment building.

e) The top of the Unit 2 main vent stack is at elevation 203.5 feet (MSL), and as such is 10.1 feet above the top of the reactor containment building dome. As a result, the Unit 2 main vent stack does not qualify as a "free-standing" stack greater than 80 meters tall.[1]

f) The Unit 2 main vent stack is designed to accept gaseous radioactive waste from various sources. Sources which may contribute radioactive material to the Unit 2 main vent stack are tabulated in Attachment 7.

4. Auxiliary Boiler Deaerator

a) Radioactive gases may be vented from the auxiliary boiler deaerator during periods of primary to secondary leakage.

b) Steam from the Moisture Separator Reheater (MSR) may be used in the deaerator. In the event of a primary to secondary leak, the MSR steam could become contaminated. Therefore, a potential exists for the release of radioactive gases in steam discharged from the auxiliary boiler deaerator.

c) The discharge of steam is accomplished via a relief vent, 0-VBV-1891, which allows excess pressure to be vented to atmosphere.

d) In the event the auxiliary boiler deaerator were to become contaminated, the amount of radioactivity released and the resulting doses/dose rates at the **SITE BOUNDARY** can be estimated if the following parameters are known:

(1) the MSR steam activity obtained from a sample,

---

1 As defined by Regulatory Guide 1.111

(2) the duration of the discharge,

(3) the estimated steam discharge flow rate, and

(4) the measured or average annual meteorological conditions.

e) In accordance with applicable safety evaluations[1], continued operation of this system is allowed as long as the concentration of radionuclides in the auxiliary boiler steam drum is less than 96 MPCs.

5. Steam Generator Atmospheric Steam Dump System

a) Radioactive gases are not normally vented from this pathway.

b) Radioactive gases may be vented from the steam generator atmospheric steam dump system during periods of primary to secondary leakage.

c) If a primary to secondary leak is present and the steam dump valves are opened, the amount of radioactivity released and the resulting doses/dose rates at the **SITE BOUNDARY** can be estimated if the following parameters are known (per UFSAR, 10.1.2.2):

(1) the specific activity of a main steam sample as determined by **GAMMA ISOTOPIC ANALYSIS**,

(2) the duration of discharge,

(3) the estimated steam discharge flow rate, and

(4) the measured or average annual meteorological conditions.

d) The total capacity of the atmospheric steam dump valve is 5 percent of steam flow with the reactor at full power (per UFSAR, 10.1.2.2).

6. Plant Nitrogen System

a) Radioactive gases are not normally vented from this pathway.

b) Nitrogen is supplied to various components which contain radioactive materials (e.g., VCT).

c) In the event the plant nitrogen system were to become contaminated, the amount of radioactivity released and the resulting doses/dose rates at the **SITE BOUNDARY** can be estimated if the following parameters are known:

(1) the specific activity of the gas in the plant nitrogen system as determined by **GAMMA ISOTOPIC ANALYSIS**,

(2) the pressure of the nitrogen system,

(3) the volume of the nitrogen system, and

---

1 See 50.59 Log No. 90-0-027-037-R1.

(4) the measured or average annual meteorological conditions.

d) It should be noted that the amount of radioactivity released could be estimated based on knowledge of other related parameters.

e) In accordance with applicable safety evaluations[1], continued operation of this system is allowed as long as the concentration of radionuclides is less than 13,400 MPCs.

7. Turbine Building Exhaust

a) Radioactive gases are not normally vented from this pathway.

b) In the event radioactive gases were to be released through the turbine building exhaust, the amount of radioactivity released and the resulting doses/dose rates at the **SITE BOUNDARY** can be estimated if the following parameters are known:

(1) the specific activity of the turbine building air,

(2) the duration of the discharge,

(3) the estimated flow rate during the discharge, and

(4) the measured or average annual meteorological conditions.

8. Emergency Air Lock

a) Radioactive gases are not normally vented from this pathway.

b) In the event radioactive gases were to be released through the emergency air lock, the amount of radioactivity released and the resulting doses/dose rates at the **SITE BOUNDARY** can be estimated if the following parameters are known:

(1) the containment air activity obtained from a sample,

(2) the volume of the air lock (9.558 cubic meters),

(3) the measured or average annual meteorological conditions.

9. Plant Compressed Air

a) Radioactive gases are not normally vented from this pathway.

b) In the event the plant compressed air system were to become contaminated, the amount of radioactivity released and the resulting doses/dose rates at the **SITE BOUNDARY** can be estimated if the following parameters are known:

(1) the specific activity of the compressed air system,

(2) the pressure of the compressed air system,

(3) the volume of the compressed air system, and

---

1 See 50.59 Log No. 90-0-074-011-R1.

(4) the measured or average annual meteorological conditions.

10. Main Steam Line Penetrations

a) Radioactive gases are not normally vented from this pathway.

b) This penetration is cooled by outside air.

c) Gases may be released to the atmosphere through safety vents to the roof at elevation 91.5 feet.

d) See UFSAR 9.8.2.3.

11. Steam Driven Auxiliary Feed Pumps

a) Radioactive gases are not normally vented from this pathway.

b) In the event radioactive gases were to be released through the auxiliary feed pumps, the amount of radioactivity released and the resulting doses/dose rates at the **SITE BOUNDARY** can be estimated if the following parameters are known:

(1) the activity in the steam,

(2) the volume of steam released.

12. Containment Equipment Hatch

a) Radioactive gases are not normally vented from this pathway.

b) In the event radioactive gases were to be released through the containment equipment hatch, the amount of radioactivity released and the resulting doses/dose rates at the **SITE BOUNDARY** can be estimated if the following parameters are known:

(1) the containment air activity obtained from a sample,

(2) the volume of the air released,

(3) the measured or average annual meteorological conditions.

13. Gland Steam Exhaust Condenser

a) Radioactive gases are not normally vented from this pathway.

b) In the event radioactive gases were to be released through the gland steam exhaust condenser, the amount of radioactivity released and the resulting doses/dose rates at the **SITE BOUNDARY** can be estimated if the following parameters are known:

(1) activity in the gland steam exhaust condenser,

(2) the flow rate through the gland steam exhaust condenser,

(3) the duration of the leak, and

(4) the measured or average annual meteorological conditions.

14. Other unmonitored release paths should be evaluated and added to the ODCM as necessary.

TYPES OF GASEOUS RELEASES

1. All gaseous radwaste releases are classified as either **BATCH RELEASES** or **CONTINUOUS RELEASES.**

2. The definition of **BATCH RELEASE** is included in the definitions section of the ODCM.

3. The definition of **CONTINUOUS RELEASE** is included in the definitions section of the ODCM.

4. Gaseous radwaste discharges have been classified as CONTINUOUS or BATCH as shown on Attachments 7 and 8.

PROCESSING EQUIPMENT

1. Simplified Flow Diagram

   a) An overview of the gaseous waste processing system, including major equipment and (normal) flow paths, is outlined on Attachment 9.

2. Modifications

   a) Licensed initiated major changes to the gaseous waste processing system shall b. reported to the Commission in the Radioactive Effluent Release Report for the period in which the modification to the waste system was completed (per Technical Specification 5.6.3). The discussion of each change shall contain:

      (1) A description of the equipment, components and processes involved; and

      (2) Documentation of the fact that the change, including the safety analysis, was reviewed and found acceptable by the onsite review function.

   b) A "major" change or modification includes, but is not limited to, the removal or permanent bypass of any of the following:

      (1) waste gas decay tank

      (2) waste gas surge tank

      (3) degassifier

      (4) HEPA filter

      (5) charcoal filter

3. Detailed Description

   a) A detailed description of the gaseous waste processing system is beyond the sc of the ODCM.

b) For more information on the Waste Gas System, see the CCNPP System Description Number 14A, "Waste Gas System."

c) For more information on the Waste Gas System, see the CCNPP Updated Final Safety Analysis Report, Chapter 11, "Waste Processing And Radiation Protection."

GASEOUS EFFLUENT RADIATION MONITORS AND SETPOINTS

1. Wide Range Gas Monitor (1-RE-5416)

a) General description

(1) The Wide Range Gas Monitor (WRGM) contains 3 radiation elements

(a) low-range noble gas detector

i) Designation of radiation element: 1-RE-5416

ii) type of radiation element: Off-line scintillation

iii) output: digital

iv) Radiation indicator: 1-RIC-5415

v) units for radiation indicator are user programmable and are normally set to microcuries per cubic centimeter or microcuries per second

vi) supplier: Sorrento Electronics (formerly General Atomics)

(b) mid-range, noble gas detector

i) Designation of radiation element: 1-RE-5417

ii) type of radiation element: Solid state

iii) This noble gas monitor is used to measure the release of radioactivity from unit 1 main vent in the event of an accident. (UFSAR, 11.2.3.2.12)

iv) setpoints for the mid-range detector will not be addressed in the ODCM

(c) high-range, noble gas detector

i) Designation of radiation element: 1-RE-5418

ii) type of radiation element: Solid state

iii) This detector is used to measure the release of radioactivity from unit 1 main vent in the event of an accident. (UFSAR, 11.2.3.2.12)

iv) setpoints for the high-range detector will not be addressed in the ODCM

(2) The low range detector will be the only detector addressed further in the ODCM.

b) Functions of 1-RE-5416

(1) continuously measure the release rate of noble gases emanating from the Unit 1 main vent stack (Control 4.11.2.1.1 or 4.11.2.1.2, Table 4.11-2)

(2) continuously indicate (via 1-RIC-5415) the release rate of noble gases emanating from the Unit 1 main vent stack (Control 4.11.2.1.1 or Control 4.11.2.1.2, Table 4.11-2)

(3) alarm (via 1-RIC-5415) prior to exceeding the site-boundary, noble-gas, total-body-dose-rate limit of 500 mr/yr (per Control 3.11.2.1.a)

(4) alarm (via 1-RIC-5415) prior to exceeding the site-boundary, noble-gas, skin-dose-rate limit of 3000 mr/yr (per Control 3.11.2.1.a)

c) **OPERABILITY** of 1-RE-5416

(1) This monitor shall be operable (or have **OPERABILITY**) when it is capable of performing its specified function(s).

(2) The functions of this monitor are listed in section (b) above.

d) Monitors equivalent to 1-RE-5416

(1) 1-RE-5415 [the "Westinghouse Plant Vent Stack Monitor"] has the capability of providing the measurement and alarm functions of 1-RE-5416 during times when 1-RE-5416 is declared inoperable.

(2) 1-RE-5415 provides redundant monitoring [for 1-RE-5416] at the low end of the concentration ranges (UFSAR 11.2.3.2.12).

(3) In the event 1-RE-5415 is inoperable or otherwise unavailable, 1-RE-5416 may fulfill the measuring, indicating, and alarming functions normally provided by 1-RE-5415.

e) Radiological effluent controls for 1-RE-5416

(1) Control 3.3.3.9 states that releases via the plant vent stack may continue if any one of the following three conditions are satisfied:

(a) 1-RE-5415 is operable AND the alarm setpoint for 1-RI-5415 is set to ensure the annual dose rates due to noble gases at the **SITE BOUNDARY** are less than 500 mr/yr to the total body and are less than 3000 mr/yr to the skin (per Control 3.11.2.1.a), or

(b) an "equivalent monitor" is operable AND the alarm trip setpoint for the "equivalent monitor" is set to ensure annual dose rates due to noble gases at the **SITE BOUNDARY** are less than 500 mr/yr to the total body and are less than 3000 mr/yr to the skin (per Control 3.11.2.1.a), or

(c) grab samples are obtained and analyzed for gross activity at least once per 24 hours in accordance with Controls 3.11.2.1.a, 4.11.2.1.1, and 4.11.2.1.2 (per Control 4.3.3.9, Table 3.3-12, **ACTION** 37).

f) Surveillances for 1-RE-5416

(1) Control 4.3.3.9 requires demonstrating the **OPERABILITY** of 1-RE-5416 by satisfying the checks, calibrations, and tests listed below:

(a) **CHANNEL CHECK** within the past 24 hours

(b) **SOURCE CHECK** within the past 31 days

(c) **CHANNEL CALIBRATION** within the past 18 months

(d) **CHANNEL FUNCTIONAL TEST** within the past 6 six months

g) Setpoints for 1-RIC-5415

(1) Requirements and commitments

(a) The alarm and fixed setpoints ... shall be determined and adjusted in accordance with the methodology and parameters of the ODCM. (Control 3.3.3.9)

(b) The method for calculating fixed or adjustable setpoints shall be provided in the ODCM (per NUREG-0133, 5.1.1).

(2) There are four radiation alarm setpoints associated with, or otherwise related to, the WRGM.

(a) 1-RIC-5415 fixed high-high radiation alarm setpoint

(b) 1-RIC-5415 fixed high radiation alarm setpoint

(c) 1-RIC-5415 adjustable plant computer high radiation alarm setpoint

(d) 1-RIC-5415 adjustable plant computer alert setpoint.

(3) In order to simplify the setpoint terminology, eliminate ambiguity, and minimize the possibility of misinterpretation, the ODCM will refer to these setpoints as follows

(a) The 1-RIC-5415 fixed high-high radiation alarm setpoint will be referred to as the fixed high alarm setpoint

(b) The 1-RIC-5415 fixed high radiation alarm setpoint will be referred to as the fixed alert setpoint

(c) The 1-RIC-5415 adjustable plant computer high radiation alarm setpoint will be referred to as the adjustable setpoint

(d) The 1-RIC-5415 adjustable plant computer alert setpoint will be referred to as the alert setpoint.

(4) Each of these alarm setpoints are described below.

h) Fixed high alarm setpoint for 1-RIC-5415

(1) General information

(a) The fixed high alarm setpoint is not adjusted for each release.

(b) Whenever the fixed high alarm setpoint is exceeded, an alarm will be generated.

(c) The current value for the fixed high alarm setpoint is specified in the CCNPP Alarm Manual.

(d) The CCNPP Alarm Manual[1] refers to the fixed high alarm setpoint as the Unit 1 Wide Range Noble Gas Radiation Monitor high alarm setpoint.

(e) The fixed high alarm setpoint is integral to the WRGM, as purchase from the supplier.

(f) The fixed high alarm setpoint is administratively controlled by EN-1-100.

(g) The fixed high alarm setpoint shall be calculated as described below.

(2) Calculating the fixed high alarm setpoint for 1-RIC-5415

(a) The fixed high alarm setpoint for 1-RIC-5415 (WRGM) shall be calculated in accordance with equation 1G.[2]

FIXED HIGH ALARM SETPOINT FOR 1-RIC-5415

$$S_{fixhh} \leq [c' / (x/Q)] [F_{dx} / (F_{d1} + F_{d2})] [A_{TLn}] \qquad \text{Eq. 1G}^{1}$$

Where,

S_{fixhh} = the fixed high alarm setpoint for 1-RIC-5415 (microcuries per second)

c' = a conversion constant (1E6 cubic centimeters per cubic meter)

---

1 The CCNPP Alarm Manual is controlled by NO-1-201.

2 The alarm and trip setpoints ... shall be determined and adjusted in accordance with the methodology ar parameters of the ODCM. (Control 3.3.3.9).

x/Q = the highest calculated annual average relative concentration for any area at or beyond the UNRESTRICTED AREA boundary (2.2E-6 seconds per cubic meter)

Unit 1 main vent releases are considered "long-term" releases[2], and as such, the highest historical annual average dispersion factor, (x/Q), is used in the setpoint calculations.

The highest annual average dispersion factor (x/Q) is 2.2E-6 (UFSAR, 2.3.6.3) for purposes of routine, long-term concentrations (e.g., routine noble gas releases)

The maximum annual average on-shore concentrations occur in the southeast sector at a distance of 1300 meters for purposes of routine, long-term concentrations (e.g., routine noble gas releases) (UFSAR, 2.3.6.3)

F_{dx} = the estimated main vent stack (diluted gaseous radwaste) flow rate for unit, x, (cubic meters per second)

The estimated main vent stack flow rates for Unit 1 and Unit 2 are defined below.

F_{d1} = the estimated main vent stack flow rate for Unit 1 (cubic meters per second)

Since the main vent stack flow rate will vary depending on the configuration of air dampers and the input gas streams, nominal main vent stack flow rate is used to calculate the fixed high alarm setpoint.

Use the nominal Unit 1 main vent stack flow rate listed on Attachment 7.

The main vent stack flow rate shall be determined, in accordance with approved procedures, at least once per 6 months (± 25%). The Test and Equipment Unit shall be responsible for performing this test. The results of the main vent flow rate test shall be evaluated to ensure the main vent flow rates used in the ODCM are an accurate reflection of the true main vent flow rates. The Radiological Effluent Technical Specifications (RETS) Program Manager is responsible for modifying the (main vent flow rates used in the) ODCM in the event the main vent flow rate for either Unit 1 or Unit 2 has increased to a value which is greater than the maximum discharge flow rates listed on Attachment 7.

F_{d2} = the estimated main vent stack (diluted gaseous radwaste) flow rate for unit 2 (cubic meters per second)

Since the main vent stack flow rate will vary depending on the configuration of air dampers and the input gas streams, nominal main vent stack flow rate is used to calculate the fixed high alarm setpoint.

Use the nominal Unit 2 main vent stack flow rate listed on Attachment 7.

The main vent stack flow rate shall be determined, in accordance with approved procedures, at least once per 6 months (± 25%). The Test and Equipment Unit shall be responsible for performing this test. The results of the main vent flow rate test shall be evaluated to ensure the main vent flow rates used in the ODCM are an accurate reflection of the true main vent flow rates. The RETS Program Manager is responsible for modifying the (main vent flow rates used in the) ODCM in the event the main vent flow rate for either Unit 1 or Unit 2 has increased to a value which is greater than the maximum discharge flow rates listed on Attachment 7.

---

1 Equation 1G has been derived from NUREG-0133, 5.2.1.
2 NUREG-0133, 3.3

A_{TLn} = the sum of the total specific activities of all radionuclides found in TYPICAL GASEOUS RADWASTE RELEASES (microcuries/cm^3)

Calculate A_{TLn} in accordance with equation 2G.

SPECIFIC ACTIVITY CORRESPONDING TO THE SITE BOUNDARY LIMIT

$$\Sigma [(f_i) (A_{TLn})] / A_{iLt} \leq L_{MPC} \qquad \text{Eq. 2G}^1$$

Where,

f_i = a fraction which represents the relative activity contribution of noble gas radionuclide i to the total noble gas activity for TYPICAL GASEOUS EFFLUENTS (unitless)

This value may be obtained using the guidance provided on Attachment 5.

A_{iLt} = the specific activity limit for radionuclide, i, as obtained from 10 CFR 20, Appendix B, Table II, Column 1 (microcuries/cm^3)

For all the radionuclides found in **TYPICAL RADWASTE EFFLUENTS**, use the value from 10 CFR 20, Appendix B, Table II, Column 1. An acceptable alternative is to assume an isotopic mix which results in a more conservative setpoint.

L_{MPC} = the site MPC limit (MPCs) for **UNRESTRICTED AREAS**

The value chosen for L_{MPC} in this equation is 2. The basis for this limit is 10 CFR 50.72.

It has been shown[2] that, for the radionuclides present in TYPICAL GASEOUS EFFLUENTS from CCNPP, the 2 MPC limit is more restrictive than the limits of Control 3.11.2.1(a).

It should be noted that by using "2" as the MPC limit (10 CFR 50.72), instead of using the limits of Control 3.11.2.1(a), a safety factor has been incorporated into equation 2G.

An alarm setpoint corresponding to 2 MPCs serves to initiate a determination of whether the "4-hour NRC notification" (specified in 10 CFR 50.72) is required.

---

(3) Documenting the fixed high alarm setpoint

(a) Whenever the fixed high alarm setpoint is calculated, the specific values chosen for each of the variables shall be documented in accordance with EN-1-100.

---

1 This equation has been derived from 10 CFR 20, Appendix B, Table II, Note 1.
2 Addendum To Setpoint Calculations For WRGM Monitors 1-RIC-5415 and 2-RIC-5415, R.L. Conatser, December 10, 1991.

(4) Changing the fixed high alarm setpoint for 1-RIC-5415

(a) If the fixed high alarm setpoint calculated in accordance with equation 1G exceeds the maximum range of the monitor, the fixed high setpoint shall be adjusted to a value which falls within the normal operating range of the monitor.

(b) The fixed high alarm setpoint may be established at values lower than the maximum allowable setpoint, if desired.

(c) A setpoint change should be initiated whenever any of the parameters identified in the setpoint calculation equations (identified in this section of the ODCM) have changed.

(d) The fixed high alarm setpoint should not be changed unless one of the following occurs:

i) the relative activity[1] of any radionuclide in TYPICAL GASEOUS EFFLUENTS has changed by greater than 10%, and the new radionuclide mixture yields a fixed setpoint which is 10% (or more) lower than the current fixed setpoint,

ii) the historical maximum annual average atmospheric dispersion factor has changed,

iii) the MPC limit at the **SITE BOUNDARY**, (L_{MPC}) has changed,

iv) the Unit 1 or Unit 2 main vent stack flow rate has changed by greater than or equal to 10%[2],

v) the values listed in 10 CFR 20, Table II, column 1 have changed,

vi) the radiation monitor has been recently calibrated, repaired, or otherwise altered, or

vii) the monitor is not conservative in its function (see "Functions of 1-RE-5416" earlier in this section).

(e) EN-1-100 contains the administrative controls associated with changing and approving fixed high alarm setpoint.

---

1 As determined in accordance with Attachment 5.
2 As determined by surveillance test results (e.g., STP-M-462-1 or STP-M-462-2).

i) Fixed alert setpoint for 1-RIC-5415

(1) General information

(a) The fixed alert setpoint is not adjusted for each release.

(b) Whenever the fixed alert setpoint is exceeded, an alarm will be generated.

(c) The CCNPP Alarm Manual does not reference this setpoint.

(d) The fixed alert setpoint is integral to the WRGM, as purchased from the supplier.

(e) The current value for the fixed alert setpoint is specified in the CCNPP Setpoint File.

(f) The fixed alert setpoint is administratively controlled by EN-1-100.

(g) The fixed alert setpoint shall be calculated as described below[1].

(2) Calculating the fixed alert setpoint for 1-RIC-5415

(a) The fixed alert setpoint for 1-RIC-5415 shall be calculated as described below:

FIXED ALERT SETPOINT FOR 1-RIC-5415

$$S_{fixh} \leq K_{sf} [S_{fixhh}] \qquad \text{Eq. 3G}$$

Where,

S_{fixh} = the fixed alert setpoint for 1-RIC-5415 (microcuries per second)

S_{fixhh} = the fixed high alarm setpoint for 1-RIC-5415 (microcuries per second)

K_{sf} = a constant, actually a safety factor, which is the fraction of the fixed high setpoint (unitless).

The safety factor chosen shall be less than or equal to 1.00. This ensures the fixed alert setpoint is always less than or equal to the fixed high alarm setpoint.

A safety factor of 1.00 will yield a fixed alert setpoint which corresponds to the fixed high alarm setpoint.

A safety factor of 0.100 will yield a fixed alert setpoint which corresponds to one-tenth the fixed high alarm setpoint.

---

1 The alarm and trip setpoints ... shall be determined and adjusted in accordance with the methodology and parameters of the ODCM. (Control 3.3.3.9).

It is recommended that a safety factor of 0.1 be used for calculating the fixed alert setpoint, however, other values--not to exceed 1.00--may be used as directed by the General Supervisor Chemistry.

The particular value selected for the safety factor is somewhat arbitrary, however a value less than 1.00 does provide plant personnel with adequate time to respond to changing plant conditions and to initiate corrective **ACTIONS** so as to minimize the possibility of violating either the 10 CFR 50.72 limit or the Control 3.3.3.9 limits.

The use of the safety factor is consistent with ALARA philosophy that licensees should make every reasonable effort to maintain radiation exposures, and releases of radioactive materials in effluents to **UNRESTRICTED AREAS**, as low as is reasonably achievable.

The use of a "safety margin" is in accordance with the provisions of NUREG-0133 which states that "... the alarm and trip setpoints ... should correspond to a value(s) which represents a safe margin of assurance that the instantaneous gaseous release limit of Control 3.11.2.1(a) will not be exceeded." (per NUREG-0133, 5.1.1).

This safety margin will prevent minor fluctuations in the nominal plant vent stack flow rates, errors in monitor efficiencies, and other statistical aberrations from adversely impacting the calculated fixed alert setpoint.

---

(3) Documenting the fixed alert setpoint

(a) Whenever the fixed alert setpoint is calculated, the specific values chosen for each of the variables shall be documented in accordance with EN-1-100.

(4) Changing the fixed alert setpoint for 1-RIC-5415

(a) A setpoint change should be initiated whenever any of the parameters identified in equation 3G have changed.

(b) The fixed alert setpoint should be changed whenever the fixed high setpoint is changed.

(c) The fixed alert setpoint should be changed if the value of the safety factor is changed.

(d) See EN-1-100 for a description of activities associated with setpoint changes and setpoint approvals.

j) Adjustable alarm setpoint for 1-RIC-5415

(1) General information

(a) Whenever this monitor is satisfying the minimum channels operable requirement (per Control 3.3.3.9), the adjustable setpoint is calculated and adjusted prior to each release of a WGDT, each containment vent, and each containment purge discharged via the main vent.

(b) The adjustable setpoint is based on the specific activities of the radionuclides present in either the WGDT or the containment building, whichever is applicable. (The radionuclide concentrations are determined by radiochemical analysis in accordance with applicable CHEMISTRY SECTION procedures as required by Control 4.11.2.1.2).

(c) Whenever the adjustable setpoint is exceeded, the WGDT, PURGE, or vent discharge via the main vent will be manually suspended.

(d) Refer to the Alarm Manual for a full list of operator ACTIONS taken in response to this alarm.

(e) The adjustable setpoint corresponds to the maximum concentration of radionuclides anticipated or expected when discharging a WGDT, a containment vent, or a containment purge via the main vent. For containment purges during outages, system evolutions may cause containment atmosphere activity to increase above what is normally expected for short periods of time.

(f) The value for the adjustable setpoint is recorded on the gaseous release permit in accordance with applicable CHEMISTRY SECTION procedures.

(g) This alarm is not integral to the main vent radiation monitor, as purchased from the supplier.

(h) This alarm is generated by the plant computer which monitors output from 1/2-RIC-5415, and provides an alarm to plant operators when the 1/2-RIC-5415 adjustable setpoint has been exceeded.

(i) When this monitor is satisfying the minimum channels operable requirement (per Control 3.3.3.9), a value for the adjustable alarm setpoint shall be calculated prior to each release of a WGDT, each containment vent, and each containment purge as shown below.

(2) Calculating the adjustable setpoint for 1/2-RIC-5415

(a) The adjustable setpoint is based on the specific activity of the radionuclides in the undiluted gaseous waste (as determined by radiochemical analysis per Control 4.11.2.1.2), and the alarm setpoint is calculated as shown below.

ADJUSTABLE SETPOINT FOR 1/2-RIC-5415

$$S_{adj} \leq (K_{sf}) \left[(c' F_u \sum A_{iu} e_i) + Bkg \right] \qquad \text{Eq. 29G}^1$$

May 2004

S_{adj} = the adjustable setpoint for 1/2-RIC-5415 (microcuries per second)

K_{sf} = a constant, actually a safety factor, which allows for fluctuation in radiation monitor response (unitless)

This safety factor helps ensure the release is not unnecessarily terminated due to (1) electronic anomalies which cause spurious monitor responses, (2) statistical fluctuations in disintegration rates, (3) statistical fluctuations in detector efficiencies, (4) errors associated with sample analysis, (5) errors associated with monitor calibrations[2], and (6) anticipated short term variations in containment activity (applicable to containment purges only).

It is recommended that a safety factor of 10 for containment purge releases be used for calculating the adjustable setpoint. However, other values for purge releases -- not to exceed 10 -- may be used as directed by the General Supervisor Chemistry. A safety factor of 1.5 shall be used for all other gaseous releases.

The particular value selected for the safety factor is somewhat arbitrary, however a value less than or equal to 10 does provide plant personnel with adequate time to respond to changing plant conditions and to initiate corrective **ACTIONS** so as to minimize the possibility of violating either the 10 CFR 50.72 limit or the Control 3.3.3.9 limits.

The use of the safety factor is consistent with ALARA philosophy that licensees should make every reasonable effort to maintain radiation exposures, and releases of radioactive materials in effluents to **UNRESTRICTED AREAS**, as low as is reasonably achievable.

The use of a "safety margin" is in accordance with the provisions of NUREG-0133 which states that ". . . the alarm and trip setpoints . . . should correspond to a value(s) which represents a safe margin of assurance that the instantaneous gaseous release limit of Control 3.11.2.1(a) will not be exceeded."
(per NUREG-0133, 5.1.1).

---

1 Equation 29G has been derived from NUREG-0133, Addendum, page AA-1.

2 The "analysis errors" and "calibration errors" refer to errors which are within established quality assurance and quality control limits.

This safety margin will prevent minor fluctuations in the nominal plant vent stack flow rates, errors in monitor efficiencies, and other statistical aberrations from adversely impacting the calculated adjustable setpoint. Additionally for a special case of containment purges during outages, the safety factor allows for short term variations in activity created as a result of system evolutions in containment.

F_u = maximum undiluted radwaste flow rate (cubic meters per second)

Values of maximum undiluted radwaste flow rates for various waste streams are tabulated in Attachment 7.

A_{iu} = specific activity of radionuclide, i, in the undiluted waste stream, either the WGDT or the containment building (microcuries per cubic centimeter)

e_i = absolute detector efficiency for nuclide, i (microcuries Xe-133 equivalent per microcuries nuclide i)

The detector efficiency for each radionuclide may be calculated from data collected during calibration of the radiation monitor.

Bkg = an approximation of the detector background (microcuries per second)

c' = a conversion constant (1E6 cubic centimeters per cubic meter)

(3) Documenting the adjustable setpoint for 1/2-RIC-5415

(a) Whenever the adjustable setpoint is calculated, the specific values chosen for each of the variables shall be documented in accordance with approved CHEMISTRY SECTION procedures (e.g., CP-604).

(4) Changing the adjustable setpoint for 1/2-RIC-5415

(a) In all cases, the adjustable setpoint shall be set to a value which is less than or equal to the fixed setpoint.

(b) If the adjustable setpoint exceeds the maximum range of the monitor, the setpoint shall be adjusted to a value which falls within the normal operating range of the monitor.

(c) CHEMISTRY SECTION procedures (e.g., CP-604) contain administrative controls associated with calculating and approving an adjustable setpoint.

(d) Whenever this monitor is satisfying the minimum channels operable requirement (per Control 3.3.3.9) the calculated value for the adjustable setpoint shall be entered into the plant computer prior to each release of a WGDT, a containment vent, or a containment purge via the main vent.

k) Alert setpoint for 1-RIC-5415

(1) General information

(a) The alert setpoint is applicable to containment purges only.

(b) Whenever this monitor is satisfying the minimum channels operable requirement (per Control 3.3.3.9), the alert setpoint is calculated and adjusted prior to each containment purge discharged via the main vent.

(c) The alert setpoint is based on the specific activities of the radionuclides present in the containment building. (The radionuclide concentrations are determined by radiochemical analysis in accordance with applicable CHEMISTRY SECTION procedures as required by Control 4.11.2.1.2).

(d) Whenever the alert setpoint is exceeded the PURGE via the main vent may continue.

(e) The alert setpoint corresponds to a level of activity which indicates additional source term(s) may be present, and as a result, additional notifications and/or actions are required to identify the source and to accurately account for the activity discharged.

(f) The value for the alert setpoint is recorded on the gaseous release permit in accordance with applicable CHEMISTRY SECTION procedures.

(g) This alarm is not integral to the main vent radiation monitor, as purchased from the supplier.

(h) This alarm is generated by the plant computer which monitors output from 1/2-RIC-5415, and provides an alarm to plant operators when the 1/2-RIC-5415 alert setpoint has been exceeded.

(i) When this monitor is satisfying the minimum channels operable requirement (per Control 3.3.3.9), a value for the alert setpoint shall be calculated prior to each containment purge via the main vent as shown below.

(2) Calculating the alert setpoint for 1/2-RIC-5415

(a) The alert setpoint is based on the specific activity of the radionuclides in the undiluted gaseous waste (as determined by radiochemical analysis per Control 4.11.2.1.2), and the setpoint is calculated as shown below.

ALERT SETPOINT FOR 1/2-RIC-5415

$$S_{alert} \leq (1.50)\ [(c'\ F_u \sum A_{iu}\ e_i) + Bkg] \qquad \text{Eq. 29G}^1$$

S_{alert} = the alert setpoint for 1/2-RIC-5415 (microcuries per second)

1.50 = a constant, actually a safety factor, which allows for fluctuation in radiation monitor response (unitless)

This safety factor helps ensure the release is not unnecessarily terminated due to (1) electronic anomalies which cause spurious monitor responses, (2) statistical fluctuations in disintegration rates, (3) statistical fluctuations in detector efficiencies, (4) errors associated with sample analysis, and (5) errors associated with monitor calibrations[2].

1 Equation 29G has been derived from NUREG-0133, Addendum, page AA-1.
2 The "analysis errors" and "calibration errors" refer to errors which are within established quality assurance and quality control limits.

The use of the safety factor is consistent with ALARA philosophy that licensees should make every reasonable effort to maintain radiation exposures, and releases of radioactive materials in effluents to **UNRESTRICTED AREAS**, as low as is reasonably achievable.

The use of a "safety margin" is in accordance with the provisions of NUREG-0133 which states that "... the alarm and trip setpoints ... should correspond to a value(s) which represents a safe margin of assurance that the instantaneous gaseous release limit of Control 3.11.2.1(a) will not be exceeded." (per NUREG-0133, 5.1.1).

This safety margin will prevent minor fluctuations in the nominal plant vent stack flow rates, errors in monitor efficiencies, and other statistical aberrations from adversely impacting the calculated alert setpoint.

F_u = maximum undiluted radwaste flow rate (cubic meters per second)

Values of maximum undiluted radwaste flow rates for various waste streams are tabulated in Attachment 7.

A_{iu} = specific activity of radionuclide, i, in the containment building (microcuries per cubic centimeter)

e_i = absolute detector efficiency for nuclide, i (microcuries Xe-133 equivalent per microcuries nuclide i)

The detector efficiency for each radionuclide may be calculated from data collected during calibration of the radiation monitor.

Bkg = an approximation of the detector background (microcuries per second)

c' = a conversion constant (1E6 cubic centimeters per cubic meter)

---

(3) Documenting the alert setpoint for 1/2-RIC-5415

(a) Whenever the alert setpoint is calculated, the specific values chosen for each of the variables shall be documented in accordance with approved CHEMISTRY SECTION procedures (e.g., CP-604).

(4) Changing the alert setpoint for 1/2-RIC-5415

(a) In all cases, the alert setpoint shall be set to a value which is less than or equal to the fixed setpoint.

(b) If the alert setpoint exceeds the maximum range of the monitor, the setpoint shall be adjusted to a value which falls within the normal operating range of the monitor.

(c) CHEMISTRY SECTION procedures (e.g., CP-604) contain administrative controls associated with calculating and approving an alert setpoint.

(d) Whenever this monitor is satisfying the minimum channels operable requirement (per Control 3.3.3.9) the calculated value for the alert setpoint shall be entered into the plant computer prior to each containment purge via the main vent.

2. Wide Range Gas Monitor (2-RE-5416)

   a) all information related to 1-RE-5416 is applicable to the Unit 2 WRGM with the following exceptions(s)

   b) Monitors equivalent to 2-RE-5416

      (1) 2-RE-5415 [the "Westinghouse Plant Vent Stack Monitor"] has the capability of providing the measurement and alarm functions of 2-RE-5416 during times when 2-RE-5416 is declared inoperable

      (2) 2-RE-5415 provides redundant monitoring [for 2-RE-5416] at the low end of the concentration ranges (UFSAR 11.2.3.2.12)

3. Westinghouse Plant Vent Stack Monitor (1-RE-5415)

   a) The Westinghouse Plant Vent Stack Monitor contains 2 radiation elements

      (1) 1-RE-5414

         (a) particulate detector

         (b) off-line scintillation detector

         (c) analog output

         (d) supplies signals to radiation indicator 1/2-RI-5414

         (e) values displayed by 1/2-RI-5414 are in units of counts per minute

         (f) the detector manufacturer is Westinghouse

      (2) 1-RE-5415

         (a) noble gas detector

         (b) off-line GM Tube

         (c) analog output

         (d) supplies signals to radiation indicator 1/2-RI-5415

         (e) values displayed by 1/2-RI-5415 are in units of counts per minute

         (f) the detector manufacturer is Westinghouse

   b) Functions of 1-RE-5414

      (1) The functions of 1-RE-5414 are mentioned here only as a basis for excluding this radiation element from the setpoint controls of Control 3.3.3.9.

      (2) This monitor (the particulate monitor) was retired in place.

c) Functions of 1-RE-5415[1]

(1) continuously measure the activity (cpm) of noble gases emanating from the Unit 1 main vent stack (Control 4.11.2.1.2, Table 4.11-2)

(2) continuously indicate (via 1-RI-5415) the activity (cpm) of noble gases emanating from the Unit 1 main vent stack (Control 4.11.2.1.2, Table 4.11-2)

(3) alarm (via 1-RI-5415) prior to exceeding the site-boundary, noble-gas, total-body-dose-rate limit of 500 mr/yr (per Control 3.11.2.1.a)

(4) alarm (via 1-RIC-5415) prior to exceeding the site-boundary, noble-gas, skin-dose-rate limit of 3000 mr/yr (per Control 3.11.2.1.a)

---

1 This (radiation element) monitors noble gases. Other radiation elements monitor particulates in this waste stream.

d) **OPERABILITY** of 1-RE-5415

(1) This monitor shall be operable (or have **OPERABILITY**) when it is capable of performing its specified function(s).

(2) The functions of 1-RE-5415 are listed in section (c) above.

e) Monitors equivalent to 1-RE-5415

(1) The Wide Range Gas Monitor (i.e., 1-RE-5416) has the capability of providing the measurement and alarm functions of 1-RE-5415 during times when 1-RE-5415 is declared inoperable.

(2) 1-RE-5415 provides redundant monitoring [for 1-RE-5416] at the low end of the concentration ranges (UFSAR 11.2.3.2.12).

(3) In the event 1-RE-5415 is inoperable or otherwise unavailable, 1-RE-5416 may fulfill the measuring, indicating, and alarming functions normally provided by 1-RE-5415.

(4) The absence of a radiation element dedicated to measuring the particulate activity in the Wide Range Gas Monitor does not preclude the use of 1-RE-5416 as a backup for 1-RE-5415. This is mentioned only as a basis for excluding 1/2-RE-5414 from the setpoint controls of Control 3.3.3.9 (see "Functions of 1-RE-5414" earlier in this section).

f) Radiological effluent controls for 1-RE-5415

(1) Control 3.3.3.9 states that releases via the plant vent stack may continue if any one of the following three conditions are satisfied

(a) 1-RE-5415 is operable AND the alarm setpoint for 1-RI-5415 is set to ensure the annual dose rates due to noble gases at the **SITE BOUNDARY** are less than 500 mr/yr to the total body and are less than 3000 mr/yr to the skin (per Control 3.11.2.1.a), or

(b) an "equivalent monitor" (see section (e) above) is operable AND the alarm setpoint for the "equivalent monitor" is set to ensure annual dose rates due to noble gases at the **SITE BOUNDARY** are less than 500 mr/yr to the total body and are less than 3000 mr/yr to the skin (per Control 3.11.2.1.a), or

(c) grab samples are obtained and analyzed for gross activity at least once per 24 hours in accordance with Controls 3.11.2.1.a, 4.11.2.1.1, and 4.11.2.1.2 (per Control 4.3.3.9, Table 3.3-12, **ACTION** 37).

(2) Control 3.11.2.1.b (i.e., dose rates due to iodines and particulates at the **SITE BOUNDARY**) is not applicable to noble gas detector or to the setpoints related to the noble gas detector 1-RE-5415. As a result, the 1500 my/yr organ dose limit is not included as a radiological effluent control in this section of the ODCM.

g) Surveillances for 1-RE-5415

(1) Control 4.3.3.9 requires demonstrating the **OPERABILITY** of 1-RE-5415 by satisfying the checks, calibrations, and tests listed below:

(a) **CHANNEL CHECK** within the past 24 hours

(b) **SOURCE CHECK** within the past 31 days

(c) **CHANNEL CALIBRATION** within the past 18 months

(d) **CHANNEL FUNCTIONAL TEST** within the past 6 six months

h) Setpoints for 1-RI-5415

(1) Requirements and commitments

(a) The alarm and fixed setpoints ... shall be determined and adjusted in accordance with the methodology and parameters of the ODCM. (Control 3.3.3.9)

(b) The method for calculating fixed or adjustable setpoints shall be provided in the ODCM. (NUREG-0133, 5.1.1)

(2) There are four alarms associated with, or otherwise related to, 1-RE-5415.

(a) 1-RI-5415 fixed high radiation alarm setpoint

(b) 1-RI-5415 adjustable plant computer high radiation alarm setpoint

(c) 1-RI-5415 low radiation alarm setpoint

(d) 1-RI-5415 adjustable plant computer alert setpoint.

(3) In order to simplify the setpoint terminology, eliminate ambiguity, and minimize the possibility of misinterpretation, the ODCM will refer to these setpoints as follows

(a) The 1-RI-5415 fixed high radiation alarm setpoint will be referred to as the fixed setpoint.

(b) The 1-RI-5415 adjustable plant computer high radiation alarm setpoint will be referred to as the adjustable setpoint.

(c) The 1-RI-5415 low radiation alarm setpoint will be referred to as the low setpoint.

(d) The 1-RI-5415 adjustable plant computer alert setpoint will be referred to as the alert setpoint.

(4) Each of these alarm setpoints are described below.

i) The fixed setpoint for 1-RI-5415

(1) General information

(a) The fixed setpoint is not adjusted for each release.

(b) Whenever the fixed setpoint is exceeded, an alarm will be generated.

(c) The current value for the fixed setpoint is specified in the CCNPP Alarm Manual.

(d) The CCNPP Alarm Manual refers to this setpoint as the 1-RI-5415 High Alarm Setpoint.

(e) The fixed setpoint is integral to the Main Vent (Westinghouse) RMS as purchased from the supplier.

(f) The fixed setpoint is administratively controlled by EN-1-100.

(g) The fixed setpoint shall be calculated as described below[1].

(2) Calculating the fixed setpoint for 1-RI-5415

(a) The fixed setpoint for 1-RI-5415 (plant vent stack monitor) shall be calculated in accordance with equation 4G.

THE FIXED SETPOINT FOR 1-RI-5415

$$S_{fix} \leq \{ K_{sf} / [(x/Q) (F_{d1} + F_{d2})] \} \sum [(e_i) (A_{iLn})] \qquad \text{Eq. 4G}^2$$

S_{fix} = the fixed setpoint for 1-RI-5415 (counts per minute)

K_{sf} = a constant, actually a safety factor, which is the ratio of the CCNPP activity limit to the MPC limit, L_{MPC}, used in equation 2G (unitless)

The safety factor chosen shall be less than or equal to 1.00. This ensures the fixed setpoint is always less than or equal to the MPC limit, L_{MPC}, used in equation 2G.

---

1 The alarm and trip setpoints ... shall be determined and adjusted in accordance with the methodology and parameters of the ODCM. (Control 3.3.3.9).

2 Equation 4G has been derived from NUREG-0133, 5.2.1, (the 500 mr/yr equation).

A safety factor of 1.00 will yield a fixed setpoint which corresponds to the MPC limit, L_{MPC}, in equation 2G.

A safety factor of 0.500 will yield a fixed setpoint which corresponds to one-half the MPC limit, L_{MPC}, in equation 2G.

It is recommended that a safety factor of 1.0 be used for calculating the fixed setpoint, however, other values--not to exceed 1.00--may be used as directed by the General Supervisor Chemistry.

The particular value selected for the safety factor is somewhat arbitrary, however a safety factor does provide plant personnel with adequate time to respond to changing plant conditions and to initiate corrective **ACTIONS** so as to minimize the possibility of violating either the 10 CFR 50.72 limit or the Control 3.3.3.9 limits.

The use of a safety factor is consistent with the ALARA philosophy that licensees should make every reasonable effort to maintain radiation exposures, and releases of radioactive materials in effluents to **UNRESTRICTED AREAS**, as low as is reasonably achievable.

The use of a "safety margin" is in accordance with the provisions of NUREG-0133, section 5.1.1, which states that "... the alarm and trip setpoints ... should correspond to a value(s) which represents a safe margin of assurance that the instantaneous gaseous release limit of Control 3.11.2.1(a) will not be exceeded."

This safety margin will prevent minor fluctuations in the nominal plant vent stack flow rates, errors in detector efficiencies, and other statistical aberrations from adversely impacting the calculated fixed setpoint.

x/Q = the highest calculated annual average relative concentration for any area at or beyond the **UNRESTRICTED AREA** boundary (2.2E-6 seconds per cubic meter)

Unit 1 and Unit 2 main vent releases are considered "long-term" releases[1], and as such, the highest historical annual average dispersion factor, (x/Q), is used in the setpoint calculations.

The highest annual average dispersion factor (x/Q) is 2.2E-6 (UFSAR, 2.3.6.3) for purposes of routine, long-term concentrations (e.g., routine noble gas releases).

The maximum annual average on-shore concentrations occur in the southeast sector at a distance of 1300 meters for purposes of routine, long-term concentrations (e.g., routine noble gas releases) (UFSAR, 2.3.6.3).

---

1 NUREG-0133, 3.3

F_{d1} = the estimated main vent stack flow rate for Unit 1 (cubic meters per second)

Since the main vent stack flow rate will vary depending on the configuration of air dampers and the input gas streams, nominal main vent stack flow rate is used to calculate the fixed setpoint.

Use the nominal Unit 1 main vent stack flow rate listed on Attachment 7.

The main vent stack flow rate shall be determined, in accordance with approved procedures, at least once per 6 months (± 25%). The Test and Equipment Unit shall be responsible for performing this test. The results of the main vent flow rate test shall be evaluated to ensure the main vent flow rates used in the ODCM are an accurate reflection of the true main vent flow rates. The RETS Program Manager is responsible for modifying the (main vent flow rates used in the) ODCM in the event the main vent flow rate for either Unit 1 or Unit 2 has increased to a value which is greater than the maximum discharge flow rates listed on Attachment 7.

F_{d2} = the estimated main vent stack flow rate for unit 2 (cubic meters per second)

Since the main vent stack flow rate will vary depending on the configuration of air dampers and the input gas streams, nominal main vent stack flow rate is used to calculate the fixed setpoint.

Use the nominal Unit 2 main vent stack flow rate listed on Attachment 7.

The main vent stack flow rate shall be determined, in accordance with approved procedures, at least once per 6 months (± 25%). The Test and Equipment Unit shall be responsible for performing this test. The results of the main vent flow rate test shall be evaluated to ensure the main vent flow rates used in the ODCM are an accurate reflection of the true main vent flow rates. The RETS Program Manager is responsible for modifying the (main vent flow rates us in the) ODCM in the event the main vent flow rate for either Unit 1 or Unit 2 has increased to a value which is greater than the maximum discharge flow rates listed on Attachment 7.

e_i = absolute detector efficiency for nuclide, i (cpm/microcuries per milliliter)

The detector efficiency for each radionuclide may be calculated from data collected during calibration of the radiation monitor.

A_{iLn} = the specific activities of radionuclide, i, found in TYPICAL GASEOUS RADWASTE RELEASES (calculated in accordance with 10 CFR 20, Appendix B, Table II, Note 1 as described below; microcuries per milliliter)

Calculate A_{iLn} in accordance with equation 5G.

SPECIFIC ACTIVITY LIMIT FOR NUCLIDE I IN A RADIONUCLIDE MIXTURE

$$A_{iLn} = (f_i)(A_{TLn}) \qquad \text{Eq. 5G}$$

f_i = a fraction which represents the relative activity contribution of noble gas radionuclide i to the total noble gas activity for TYPICAL GASEOUS EFFLUENTS (unitless)

This value may be obtained using the guidance provided on Attachment 5.

A_{TLn} = the sum of the total specific activities of all noble gas radionuclides found in TYPICAL GASEOUS RADWASTE RELEASES (microcuries/cm^3)

Calculate A_{TLn} in accordance with equation 2G.

SPECIFIC ACTIVITY CORRESPONDING TO THE SITE BOUNDARY LIMIT

$$\Sigma[(f_i)(A_{TLn})]/A_{iLt} \leq L_{MPC} \qquad \text{Eq. 2G}^1$$

L_{MPC} = the MPC limit

The value chosen for L_{MPC} in this equation is 2. The basis for this limit is 10 CFR 50.72.

It has been shown[2] that, for the radionuclides present in TYPICAL GASEOUS EFFLUENTS from CCNPP, the 2 MPC limit is more restrictive than the limits of Control 3.3.3.9.

It should be noted that by using "2" as the MPC limit (10 CFR 50.72), instead of using the limits of Control 3.11.2.1(a), a safety factor has been incorporated into equation 2G.

The use of 2 MPCs as a safety margin is consistent with the provisions of NUREG-0133, section 5.1.1, which states that, "... in all cases, conservative assumptions may be necessary in establishing these setpoints to account for system variables, ... the variability in release flow, ... and the time lag between alarm and final isolation of radioactive effluents."

An alarm setpoint corresponding to 2 MPCs serves to initiate a determination of whether the "4-hour NRC notification" (specified in 10 CFR 50.72) is required.

The use of a limiting specific activity equivalent to 2 MPCs is consistent with the provisions of 10 CFR 20.

A_{iLt} = the specific activity limit for radionuclide, i, as obtained from 10 CFR 20, Appendix B, Table II, Column 1 (microcuries/cm^3)

For all the radionuclides found in **TYPICAL RADWASTE EFFLUENTS**, use the value from 10 CFR 20, Appendix B, Table II, Column 1. An acceptable alternative is to assume an isotopic mix which results in a more conservative setpoint.

---

1 Equation 2G has been derived from 10 CFR 20, Appendix B, Table II, Note 1.

2 Addendum To Setpoint Calculations For WRGM Monitors 1-RIC-5415 and 2-RIC-5415, R.L. Conatser, December 10, 1991.

(3) The low setpoint for 1-RI-5415

(a) The ODCM does not address the calculations associated with the low setpoint.

(b) The low setpoint is specified in the CCNPP Alarm Manual.

(c) The low setpoint may be used to determine **OPERABILITY** of this monitor (in accordance with the provisions of Control 4.3.3.9, Table 4.3-11, Note 2).

(4) Adjusting the fixed setpoint for 1-RI-5415

(a) If the fixed setpoint calculated in accordance with equation 4G exceeds the maximum range of the monitor, the fixed setpoint shall be adjusted to a value which falls within the normal operating range of the monitor.

(b) The fixed setpoint may be established at values lower than the maximum allowable setpoint, if desired.

(c) A setpoint change should be initiated whenever any of the parameters identified in equation 4G have changed.

(d) The fixed setpoint should not be changed unless one of the followir occurs:

i) the relative activity[1] of any radionuclide in TYPICAL GASEOUS EFFLUENTS has changed by greater than 10%, and the new radionuclide mixture yields a fixed setpoint which is 10% (or more) lower than the current fixed setpoint,

ii) the historical maximum annual average atmospheric dispersion factor has changed,

iii) the MPC limit at the **SITE BOUNDARY**, (presently 2 MPCs) has changed,

iv) the estimated Unit 1 main vent stack flow rate or Unit 2 main vent stack flow rate has changed by greater than or equal to 10%[2],

v) the values listed in 10 CFR 20, Table II, column 1 have changed,

vi) the radiation monitor has been recently calibrated, repaired, or otherwise altered, or

---

1 As determined in accordance with Attachment 5.
2 As determined by surveillance test results (e.g., STP-M-462-1, STP-M-462-2).

vii) the monitor is not conservative in its function (see section "Functions of 1/2-RE-5415" earlier in this section).

(e) EN-1-100 contains the administrative controls associated with changing and approving the fixed setpoint.

j) Adjustable setpoint for 1/2-RI-5415

(1). General information

(a) Whenever this monitor is satisfying the minimum channels operable requirement (per Control 3.3.3.9), the adjustable setpoint is calculated and adjusted prior to each release of a WGDT, each containment vent, and each containment purge discharged via the main vent.

(b) The adjustable setpoint is based on the specific activities of the radionuclides present in either the WGDT or the containment building, whichever is applicable. (The radionuclide concentrations are determined by radiochemical analysis in accordance with applicable CHEMISTRY SECTION procedures as required by Control 4.11.2.1.2).

(c) Whenever the adjustable setpoint is exceeded, the WGDT, PURGE, or vent discharge via the main vent will be manually suspended.

(d) Refer to the Alarm Manual for a full list of operator **ACTIONS** taken in response to this alarm.

(e) The adjustable setpoint corresponds to the maximum concentration of radionuclides anticipated or expected when discharging a WGDT, a containment vent, or a containment purge via the main vent. For containment purges during outages, system evolutions may cause containment atmosphere activity to increase above what is normally expected for short periods of time.

(f) The value for the adjustable setpoint is recorded on the gaseous release permit in accordance with applicable CHEMISTRY SECTION procedures.

(g) This alarm is not integral to the main vent radiation monitor, as purchased from the supplier.

(h) This alarm is generated by the plant computer which monitors output from 1/2-RI-5415, and provides an alarm to plant operators when the 1/2-RI-5415 adjustable setpoint has been exceeded.

(i) When this monitor is satisfying the minimum channels operable requirement (per Control 3.3.3.9), a value for the adjustable setpoint shall be calculated prior to each release of a WGDT, each containment vent, and each containment purge as shown below.

(2) Calculating the adjustable setpoint for 1/2-RI-5415

(a) The adjustable alarm setpoint is based on the specific activity of the radionuclides in the undiluted gaseous waste (as determined by radiochemical analysis per Control 4.11.2.1.2), and the alarm setpoint is calculated as shown below.

ADJUSTABLE SETPOINT FOR 1/2-RI-5415

$$S_{adj} \leq (K_{sf})\,[(F_u / F_{dx})\,[\Sigma\,(A_{lu})\,(e_l)] + Bkg] \qquad \text{Eq. 27G}^{1}$$

S_{adj} = the adjustable setpoint for 1/2-RI-5415 (cpm)

K_{sf} = a constant, actually a safety factor, which allows for fluctuation in radiation monitor response (unitless)

This safety factor helps ensure the release is not unnecessarily terminated due to (1) electronic anomalies which cause spurious monitor responses, (2) statistical fluctuations in disintegration rates, (3) statistical fluctuations in detector efficiencies, (4) errors associated with sample analysis, (5) errors associated with monitor calibrations[2], and (6) anticipated short term variations in activity (this applicable to containment purges only).

It is recommended that a safety factor of 10 for containment purge releases be used for calculating the adjustable setpoint. However, other values for purge releases -- not to excee 10 -- may be used as directed by the General Supervisor Chemistry. A safety factor of 1.5 shall be used for all other gaseous releases.

The particular value selected for the safety factor is somewhat arbitrary, however a value less than or equal to 10 does provide plant personnel with adequate time to respond to changing plant conditions and to initiate corrective **ACTIONS** so as to minimize the possibility of violating either the 10 CFR 50.72 limit or the Control 3.3.3.9 limits.

The use of the safety factor is consistent with ALARA philosophy that licensees should make every reasonable effort to maintain radiation exposures, and releases of radioactive materials in effluents to **UNRESTRICTED AREAS**, as low as is reasonably achievable.

The use of a "safety margin" is in accordance with the provisions of NUREG-0133 which states that "... the alarm and trip setpoints,... should correspond to a value(s) which represents a safe margin of assurance that the instantaneous gaseous release limit of Control 3.11.2.1(a) will not be exceeded." (per NUREG-0133, 5.1.1).

This safety margin will prevent minor fluctuations in the nominal plant vent stack flow rates, errors in monitor efficiencies, and other statistical aberrations from adversely impacting the calculated adjustable setpoint. Additionally for a special case of containment purges during outages, the safety factor allows for short term variations in activity created as a result of system evolutions in containment.

---

1 Equation 27G has been derived from NUREG-0133, Addendum, page AA-1.

2 The "analysis errors" and "calibration errors" refer to errors which are within established quality assurance and quality control limits.

F_u = maximum undiluted radwaste flow rate (cubic meters per second)

Values of maximum undiluted radwaste flow rates for various waste streams are tabulated in Attachment 7.

F_{dx} = the estimated main vent stack (diluted gaseous radwaste) flow rate for unit x (cubic meters per second)

Since the main vent stack flow rate will vary depending on the reactor unit, the configuration of air dampers, and the input gas streams, nominal main vent stack flow rate is used to calculate the adjustable setpoint.

Use the nominal main vent stack flow rate, for the appropriate unit, listed on Attachment 7.

The main vent stack flow rate shall be determined, in accordance with approved procedures, at least once per 6 months (± 25%). The Test and Equipment Unit shall be responsible for performing this test. The results of the main vent flow rate test shall be evaluated to ensure the main vent flow rates used in the ODCM are an accurate reflection of the true main vent flow rates. The RETS Program Manager is responsible for modifying the (main vent flow rates used in the) ODCM in the event the main vent flow rate for either Unit 1 or Unit 2 has increased to a value which is greater than the maximum discharge flow rates listed on Attachment 7.

A_{iu} = specific activity of radionuclide, i, in the undiluted waste stream, either the WGDT or containment building as applicable (microcuries per milliliter)

e_i = absolute detector efficiency for nuclide, i (cpm/microcuries per milliliter)

The detector efficiency for each radionuclide may be calculated from data collected during calibration of the radiation monitor.

Bkg = an approximation of the detector background (cpm)

---

(3) Documenting the adjustable setpoint for 1/2-RI-5415

(a) Whenever the adjustable setpoint is calculated, the specific values chosen for each of the variables shall be documented in accordance with approved CHEMISTRY SECTION procedures (e.g., CP-604).

(4) Changing the adjustable setpoint for 1/2-RI-5415

(a) In all cases, the adjustable alarm setpoint shall be set to a value which is less than or equal to the fixed setpoint.

(b) If the adjustable setpoint exceeds the maximum range of the monitor, the setpoint shall be adjusted to a value which falls within the normal operating range of the monitor.

(c) CHEMISTRY SECTION procedures (e.g., CP-604) contain administrative controls associated with calculating and approving an adjustable setpoint.

(d) Whenever this monitor is satisfying the minimum channels operable requirement (per Control 3.3.3.9) the calculated value for the adjustable setpoint shall be entered into the plant computer prior to each release of a WGDT, a containment vent, or a containment purge via the main vent.

k) Alert setpoint for 1/2-RI-5415

(1) General information

(a) The alert setpoint is applicable to containment purges only.

(b) Whenever this monitor is satisfying the minimum channels operable requirement (per Control 3.3.3.9), the alert setpoint is calculated and adjusted prior to each containment purge discharged via the main vent.

(c) The alert setpoint is based on the specific activities of the radionuclides present in the containment building. (The radionuclide concentrations are determined by radiochemical analysis in accordance with applicable CHEMISTRY SECTION procedures as required by Control 4.11.2.1.2).

(d) Whenever the alert setpoint is exceeded, the PURGE via the main vent may continue.

(e) The alert setpoint corresponds to a level of activity which indicates additional source term(s) may be present, and as a result, additional notifications and/or actions are required to identify the source and to accurately account for the activity discharged.

(f) The value for the alert setpoint is recorded on the gaseous release permit in accordance with applicable CHEMISTRY SECTION procedures.

(g) This alarm is not integral to the main vent radiation monitor, as purchased from the supplier.

(h) This alarm is generated by the plant computer which monitors output from 1/2-RI-5415, and provides an alarm to plant operators when the 1/2-RI-5415 alert setpoint has been exceeded.

(i) When this monitor is satisfying the minimum channels operable requirement (per Control 3.3.3.9), a value for the alert setpoint shall be calculated prior to each containment purge as shown below.

(2) Calculating the alert setpoint for 1/2-RI-5415

(a) The alert setpoint is based on the specific activity of the radionuclides in the undiluted gaseous waste (as determined by radiochemical analysis per Control 4.11.2.1.2), and the setpoint is calculated a. shown below.

ALERT SETPOINT FOR 1/2-RI-5415

$$S_{alert} \leq 1.50\ [(F_u / F_{dx})\ [\Sigma (A_{iu})(e_i)] + Bkg] \qquad \text{Eq. 27G}^1$$

S_{alert} = the alert setpoint for 1/2-RI-5415 (cpm)

1.50 = a constant, actually a safety factor, which allows for fluctuation in radiation monitor response (unitless).

This safety factor helps ensure the release is not unnecessarily terminated due to (1) electronic anomalies which cause spurious monitor responses, (2) statistical fluctuations in disintegration rates, (3) statistical fluctuations in detector efficiencies, (4) errors associated with sample analysis, and (5) errors associated with monitor calibrations.[1]

The use of the safety factor is consistent with ALARA philosophy that licensees should make every reasonable effort to maintain radiation exposures, and releases of radioactive materials in effluents to **UNRESTRICTED AREAS**, as low as is reasonably achievable.

The use of a "safety margin" is in accordance with the provisions of NUREG-0133 which states that "... the alarm and trip setpoints ... should correspond to a value(s) which represents a safe margin of assurance that the instantaneous gaseous release limit of Control 3.11.2.1(a) will not be exceeded." (per NUREG-0133, 5.1.1).

This safety margin will prevent minor fluctuations in the nominal plant vent stack flow rates, errors in monitor efficiencies, and other statistical aberrations from adversely impacting the calculated alert setpoint.

F_u = maximum undiluted radwaste flow rate (cubic meters per second)

Values of maximum undiluted radwaste flow rates for various waste streams are tabulated in Attachment 7.

F_{dx} = the estimated main vent stack (diluted gaseous radwaste) flow rate for unit x (cubic meters per second)

Since the main vent stack flow rate will vary depending on the reactor unit, the configuration of air dampers, and the input gas streams, nominal main vent stack flow rate is used to calculate the alert setpoint.

Use the nominal main vent stack flow rate, for the appropriate unit, listed on Attachment 7.

The main vent stack flow rate shall be determined, in accordance with approved procedures, at least once per 6 months (± 25%). The Test and Equipment Unit shall be responsible for performing this test. The results of the main vent flow rate test shall be evaluated to ensure the main vent flow rates used in the ODCM are an accurate reflection of the true main vent flow rates. The RETS Program Manager is responsible for modifying the (main vent flow rates used in the) ODCM in the event the main vent flow rate for either Unit 1 or Unit 2 has increased to a value which is greater than the maximum discharge flow rates listed on Attachment 7.

A_{iu} = specific activity of radionuclide, i, in the containment building (microcuries per milliliter)

---

1 Equation 27G has been derived from NUREG-0133, Addendum, page AA-1.

e_i = absolute detector efficiency for nuclide, i (cpm/microcuries per milliliter)

The detector efficiency for each radionuclide may be calculated from data collected during calibration of the radiation monitor.

Bkg = an approximation of the detector background (cpm)

(3) Documenting the alert setpoint for 1/2-RI-5415

(a) Whenever the alert setpoint is calculated, the specific values chosen for each of the variables shall be documented in accordance with approved CHEMISTRY SECTION procedures (e.g., CP-604).

(4) Changing the alert setpoint for 1/2-RI-5415

(a) In all cases, the alert setpoint shall be set to a value which is less than or equal to the fixed setpoint.

(b) If the alert setpoint exceeds the maximum range of the monitor, the setpoint shall be adjusted to a value which falls within the normal operating range of the monitor.

(c) CHEMISTRY SECTION procedures (e.g., CP-604) contain administrative controls associated with calculating and approving an alert setpoint.

(d) Whenever this monitor is satisfying the minimum channels operable requirement (per Control 3.3.3.9) the calculated value for the alert setpoint shall be entered into the plant computer prior to each containment purge via the main vent.

l) The low setpoint for 1/2-RI-5415

(1) This alarm is integral to the main vent monitor, as purchased from the supplier.

(2) The current value for the low alarm setpoint is specified in the CCNPP Alarm Manual.

(3) The low setpoint may be used to determine the **OPERABILITY** of this monitor (per Control 4.3.3.9, **CHANNEL FUNCTIONAL TEST**).

(4) The alarm generated by the low setpoint may be used to terminate a release in the event 1/2-RI-5415 fails (i.e., downscale failure or circuit failure) in accordance with Control 4.3.3.9.

(5) The low setpoint calculations are not described in the ODCM.

(6) Changes to the low setpoint are controlled by EN-1-100.

[1] The "analysis errors" and "calibration errors" refer to errors which are within established quality assurance and quality control limits.

4. Westinghouse Plant Vent Stack Monitor (2-RE-5415)

   a) All information related to 1-RE-5415 is applicable to the Unit 2 plant vent stack monitor with the following exception(s):

   b) Monitors equivalent to 2-RE-5415

      (1) 2-RE-5416 [the "WRNGM"] has the capability of providing the measurement and alarm functions of 2-RE-5415 during times when 2-RE-5415 is declared inoperable.

      (2) 2-RE-5415 provides redundant monitoring [for 2-RE-5416] at the low end of the concentration ranges (UFSAR 11.2.3.2.12).

5. **Gaseous Radwaste Processing System** Radiation Monitor (0-RE-2191)

   a) General description

      (1) The **GASEOUS RADWASTE PROCESSING SYSTEM** Radiation Monitor (Waste Gas Decay Tank Radiation Monitor) contains 1 radiation element.

      (2) It is a noble gas detector.

      (3) The detector is an in-line GM tube (UFSAR, Table 11-10).

      (4) The radiation element is designated 0-RE-2191.

      (5) The radiation indicators designated 0-RI-2191.

      (6) The units for the radiation indicator are counts per minute.

      (7) The monitor was manufactured by Westinghouse.

   b) Functions of 0-RE-2191

      (1) continuously measure the release rate of noble gases emanating from the waste gas decay tank discharge header (Control 4.11.2.1.2, Table 4.11-2)

      (2) continuously indicate (via 0-RI-2191) the activity (cpm) of noble gases emanating from the waste gas decay tank discharge header (Control 3.3.3.9 **OPERABILITY** requirement)

      (3) alarm (via 1-RI-2191) prior to exceeding the site-boundary, noble-gas, total-body-dose-rate limit of 500 mr/yr (per Control 3.11.2.1.a)

      (4) alarm (via 1-RI-2191) prior to exceeding the site-boundary, noble-gas, skin-dose-rate limit of 3000 mr/yr (per Control 3.11.2.1.a)

   c) **OPERABILITY** of 0-RE-2191

      (1) This monitor shall be operable (or have **OPERABILITY**) when it is capable of performing its specified function(s).

(2) For more information on the function(s) of this monitor, see "Functions of 0-RE-2191" elsewhere in this section of the ODCM.

d) Monitors equivalent to 0-RE-2191

(1) There are no equivalent monitors associated with 0-RE-2191 since there are no other radiation monitors permanently installed in the waste gas discharge header, however, Control 3.3.3.9 defines the plant vent stack monitor as a "BACKUP MONITOR."

(2) 0-RE-2191 is designated the PRIMARY MONITOR for measuring noble gas activity released via the **GASEOUS RADWASTE PROCESSING SYSTEM.**

(3) 1-RE-5415 (or 1-RE-5416) is designated the BACKUP MONITOR if the WGDT is discharged via the Unit 1 main vent.

(4) 2-RE-5415 (or 2-RE-5416) is designated the BACKUP MONITOR if the WGDT is discharged via the Unit 2 main vent.

(5) WGDTs may be discharged through either the Unit 1 or Unit 2 main vent stack.

(6) The BACKUP MONITOR has the capability of ensuring the noble gas activity released from the **GASEOUS RADWASTE PROCESSING SYSTEM**--to the plant vent stack--does not exceed Control 3.11.2.1(a) at the **SITE BOUNDARY** (Control 3.3.3.9).

(7) In the event PRIMARY MONITOR (0-RE-2191) is inoperable or otherwise unavailable, the designated BACKUP MONITOR (either 1-RE-5415, 1-RE-5416, 2-RE-5415, or 2-RE-5416) may fulfill the measuring, indicating, and alarming functions normally provided by the PRIMARY MONITOR as long as plant operators record the BACKUP MONITOR readings every 15 minutes (Control 3.3.3.9, Table 3.3-12, **ACTION** 35a).

e) Radiological effluent controls for 0-RE-2191

(1) Control 3.3.3.9 states that releases via the **GASEOUS RADWASTE PROCESSING SYSTEM** may continue if ANY ONE of the following three conditions are satisfied:

(a) 0-RE-2191 is operable AND the alarm setpoint for 0-RI-2191 is set to ensure the annual dose rates due to noble gases at the **SITE BOUNDARY** are less than 500 mr/yr to the total body and are less than 3000 mr/yr to the skin (per Control 3.11.2.1.a), or

(b) One "BACKUP MONITOR" (see section (e) above) is operable; AND the "BACKUP MONITOR" readings are recorded every 15 minutes during the release; AND the alarm setpoint for the "BACKUP MONITOR" is set to ensure the annual dose rates due to noble gases at the **SITE BOUNDARY** are less than 500 mr/yr to the total body and are less than 3000 mr/yr to the skin (per Control 3.11.2.1.a), or

(c) All three activities described below are completed prior to the release:

i) at least two independent samples of the waste gas decay tank's contents are analyzed, and

ii) at least two technically qualified members of the Facility Staff independently verify the release rate calculations, and

iii) two qualified operators verify the discharge valve lineup.

f) Surveillances for 0-RE-2191

(1) Control 4.3.3.9 requires demonstrating the **OPERABILITY** of 0-RE-2191 by satisfying the checks, calibrations, and tests listed below

(a) **CHANNEL CHECK** prior to each release

(b) **SOURCE CHECK** prior to each release

(c) **CHANNEL CALIBRATION** within the past 18 months

(d) **CHANNEL FUNCTIONAL TEST** within the past 6 six months

g) Setpoints for 0-RI-2191

(1) Requirements and commitments

(a) The alarm and fixed setpoints ... shall be determined and adjusted in accordance with the methodology and parameters of the ODCM. (Control 3.3.3.9)

(b) The method for calculating fixed or adjustable setpoints shall be provided in the ODCM. (NUREG-0133, 5.1.1)

(2) There are three radiation alarm setpoints associated with, or otherwise related to, 0-RE-2191.

(a) 0-RE-2191 fixed high radiation alarm and automatic termination setpoint

(b) 0-RE-2191 adjustable plant computer high radiation alarm and manual termination setpoint

(c) 0-RE-2191 low radiation alarm setpoint

(3) In order to simplify the setpoint terminology, eliminate ambiguity, and minimize the possibility of misinterpretation, the ODCM will refer to these setpoints as follows

(a) The 0-RE-2191 fixed high radiation alarm and automatic termination setpoint will be referred to as the fixed setpoint.

(b) The 0-RE-2191 adjustable plant computer high radiation alarm and manual termination setpoint will be referred to as the adjustable setpoint.

(c) The 0-RE-2191 low radiation alarm setpoint will be referred to as the low setpoint.

(4) Each of these alarm setpoints are described below.

h) Fixed setpoint for 0-RI-2191

(1) General information

(a) The fixed setpoint is not adjusted for each release.

(b) The fixed setpoint is an alarm and termination setpoint.

(c) Whenever the fixed setpoint is exceeded, an alarm will be generated, and the WGDT release will be automatically suspended.

(d) The fixed setpoint corresponds to the maximum concentration of radionuclides allowed (by equation 6G) in gaseous waste discharged from the gaseous radwaste processing system.

(e) The current value for the fixed setpoint is specified in the CCNPP Alarm Manual.

(f) The CCNPP Alarm Manual refers to this setpoint as the 0-RI-2191 High Radiation Alarm Setpoint.

(g) The fixed setpoint is integral to the waste gas discharge monitor, as purchased from the supplier.

(h) The fixed setpoint is administratively controlled by EN-1-100.

(i) The fixed setpoint shall be calculated as described below[1].

---

1 The alarm and trip setpoints ... shall be determined and adjusted in accordance with the methodology and parameters of the ODCM. (Control 3.3.3.9).

(2) Calculating the fixed setpoint for 0-RI-2191

(a) The fixed setpoint for 0-RI-2191 (waste gas discharge monitor) shall be calculated as described below:

FIXED SETPOINT FOR 0-RI-2191

$$S_{fix} \leq K_{sf} \{\{1/[(x/Q)(F_u)]\} \Sigma [(e_i)(A_{iLn})] + Bkg\} \quad \text{Eq. 6G}^1$$

Where,

K_{sf} = a constant, actually a safety factor, which is the ratio of the CCNPP activity limit to the MPC limit, L_{MPC}, used in equation 2G (unitless)

The safety factor chosen shall be less than or equal to 1.00. This ensures the fixed setpoint is always less than or equal to the MPC limit, L_{MPC}, used in equation 2G.

A safety factor of 1.00 is used for calculating the fixed setpoint.

By setting the safety factor to 1, the safety factor is disabled.

Although it may appear that if this safety factor is set to 1.0, no safety margin exists, in actuality, another margin of safety has been incorporated into equation 2G (see definition of L_{MPC}).

A safety factor of 1.00 will yield a fixed setpoint which corresponds to the MPC limit, L_{MPC}, in equation 2G.

A safety factor of 0.500 will yield a fixed setpoint which corresponds to one-half the MPC limit, L_{MPC}, in equation 2G.

Other values of safety factors--not to exceed 1.00--may be used for calculating the fixed setpoint as directed by the General Supervisor Chemistry.

The particular value selected for the safety factor is somewhat arbitrary, however a value less than or equal to 1.0 does provide plant personnel with adequate time to respond to changing plant conditions and to initiate corrective **ACTIONS** so as to minimize the possibility of violating either the 10 CFR 50.72 limit or the Control 3.3.3.9 limits.

The use of a safety factor is consistent with the ALARA philosophy that licensees should make every reasonable effort to maintain radiation exposures, and releases of radioactive materials in effluents to **UNRESTRICTED AREAS**, as low as is reasonably achievable.

The use of a "safety margin" is in accordance with the provisions of NUREG-0133 which states that "... the alarm and trip setpoints ... should correspond to a value(s) which represents a safe margin of assurance that the instantaneous gaseous release limit of Control 3.11.2.1(a) will not be exceeded." (per NUREG-0133, 5.1.1).

This safety margin will prevent minor fluctuations in the nominal WGDT discharge flow rates, errors in detector efficiencies, and other statistical aberrations from adversely impacting the calculated fixed setpoint.

S_{fix} = the fixed setpoint for 0-RI-2191 (cpm)

---

1 Equation 6G has been derived from NUREG-0133, 5.2.1, (the 500 mr/yr equation).

x/Q = the highest calculated historical annual average relative concentration for any area at or beyond the **UNRESTRICTED AREA** boundary (2.2E-6 seconds per cubic meter)

A waste gas decay tank release via the Unit 1 or Unit 2 main vent is considered a "long-term" release[1], and as such, the highest historical annual average dispersion factor, (x/Q), is used in the setpoint calculations.

The highest annual average dispersion factor (x/Q) is 2.2E-6 (UFSAR, 2.3.6.3) for purposes of routine, long-term concentrations (e.g., routine noble gas releases).

The maximum annual average on-shore concentrations occur in the southeast sector at a distance of 1300 meters for purposes of routine, long-term concentrations (e.g., routine noble gas releases) (UFSAR, 2.3.6.3).

F_u = the estimated maximum flow rate of undiluted gases through the waste gas discharge header (cubic meters per second)

Since WGDT pressure is the motive force for discharge of a WGDT, the waste gas flow rate will continually decrease as the release progresses (i.e., as tank pressure is decreased).

Use the estimated maximum WGDT discharge flow rate, listed on Attachment 7, to calculate the fixed setpoint.

e_i = absolute detector efficiency for nuclide, i (cpm/microcuries per milliliter)

The detector efficiency for each radionuclide may be calculated from data collected during calibration of the radiation monitor.

A_{iLn} = the specific activities of radionuclide, i, found in TYPICAL GASEOUS RADWASTE RELEASES (calculated in accordance with 10 CFR 20, Appendix B, Table II, Note 1 as described below; microcuries per milliliter)

Calculate A_{iLn} in accordance with equation 5G.

SPECIFIC ACTIVITY LIMIT FOR NUCLIDE I IN A RADIONUCLIDE MIXTURE

$$A_{iLn} = (f_i)(A_{TLn}) \qquad \text{Eq. 5G}$$

f_i = a fraction which represents the relative activity contribution of noble gas radionuclide i to the total noble gas activity for TYPICAL GASEOUS EFFLUENTS (unitless)

This value may be obtained using the guidance provided on Attachment 5.

A_{TLn} = the sum of the total specific activities of all noble gas radionuclides found in TYPICAL GASEOUS RADWASTE RELEASES (microcuries/cm^3).

Calculate A_{TLn} in accordance with equation 2G.

---

1 NUREG-0133, 3.3

SPECIFIC ACTIVITY OF NOBLE GASES AT THE SITE BOUNDARY

$$\Sigma [(f_i) (A_{TLn})] / A_{iLt} \leq L_{MPC} \qquad \text{Eq. 2G}^1$$

Where,

L_{MPC} = the MPC limit

The value chosen for L_{MPC} in this equation is 2. The basis for this limit is 10 CFR 50.72.

It has been shown[1] that, for the radionuclides present in TYPICAL GASEOUS EFFLUENTS from CCNPP, the 2 MPC limit is more restrictive than the limits of Control 3.3.3.9.

It should be noted that by using "2" as the MPC limit (10 CFR 50.72), instead of using the limits of Control 3.11.2.1(a), a safety factor has been incorporated into equation 2G.

The use of 2 MPCs as a safety margin is consistent with the provisions of NUREG-0133, section 5.1.1, which states that, "... in all cases, conservative assumptions may be necessary in establishing these setpoints to account for system variables, ... the variability in release flow, ... and the time lag between alarm and final isolation of radioactive effluents." (NUREG-0133, 5.1.1)

An alarm setpoint corresponding to 2 MPCs serves to initiate a determination of whether the "4-hour NRC notification" (specified in 10 CFR 50.72) is required.

A_{iLt} = the specific activity limit for radionuclide, i, as obtained from 10 CFR 20, Appendix B, Table II Column 1 (microcuries/cm^3)

For all the radionuclides found in **TYPICAL RADWASTE EFFLUENTS**, use the value from 10 CFR 20, Appendix B, Table II, Column 1. An acceptable alternative is to ensure an isotopic mix which results in a more conservative setpoint.

Bkg = an approximation of the detector background prior to initiating the gaseous release (cpm)

Instead of using an approximation of the detector background, a value of 0 cpm may be used as the detector background if so desired.

---

(3) Documenting the fixed setpoint for 0-RI-2191

(a) Whenever the fixed setpoint is calculated, the specific values chosen for each of the variables shall be documented in accordance with EN-1-100.

(4) Changing the fixed setpoint for 0-RI-2191

(a) If the fixed setpoint calculated in accordance with equation 6G exceeds the maximum range of the monitor, the fixed setpoint shall be adjusted to a value which falls within the normal operating range of the monitor.

---

1 Equation 2G has been derived from 10 CFR 20, Appendix B, Table II, Note 1.

(b) The fixed setpoint may be established at values lower than the maximum allowable setpoint, if desired.

(c) A setpoint change should be initiated whenever any of the parameters identified in equations 2G, 5G, or 6G have changed.

(d) The fixed setpoint should not be changed unless one of the following occurs:

i) the relative activity[2] of any radionuclide in TYPICAL GASEOUS EFFLUENTS has changed by greater than 10%, and the new radionuclide mixture yields a fixed setpoint which is 10% (or more) lower than the current fixed setpoint,

ii) the historical maximum annual average atmospheric dispersion factor has changed,

iii) the MPC limit at the **SITE BOUNDARY**, (presently 2 MPCs) has changed,

iv) values listed in 10 CFR 20, Table II, column 1 have changed,

v) the radiation monitor has been recently calibrated, repaired, or otherwise altered, or

vi) the monitor is not conservative in its function (see section "Functions of 0-RE-2191" earlier in this section).

(e) EN-1-100 contains the administrative controls associated with changing and approving fixed setpoint.

---

1 Addendum To Setpoint Calculations For WRGM Monitors 1-RIC-5415 and 2-RIC-5415, R.L. Conatser, December 10, 1991.

2 As determined in accordance with Attachment 5.

i) Adjustable setpoint for 0-RI-2191

(1) General information

(a) Whenever this radiation monitor is operable, the adjustable setpoint is calculated and adjusted prior to each release of a WGDT.

(b) The adjustable setpoint is based on the specific activities of the radionuclides present in the WGDT. (The radionuclide concentrations are determined by radiochemical analysis in accordance with applicable CHEMISTRY SECTION procedures as required by Control 4.11.2.1.2).

(c) Whenever the adjustable setpoint is exceeded, the WGDT discharge will be manually suspended.

(d) Refer to the radwaste Alarm Manual for a full list of operator **ACTIONS** taken in response to this alarm.

(e) The adjustable setpoint corresponds to the maximum concentration of radionuclides anticipated or expected when discharging a WGDT.

(f) The value for the adjustable setpoint is recorded on the gaseous release permit in accordance with applicable CHEMISTRY SECTION procedures.

(g) This alarm is not integral to the **GASEOUS RADWASTE PROCESSING SYSTEM** radiation monitor, as purchased from the supplier.

(h) This alarm is generated by the plant computer which monitors output from 0-RI-2191, and provides an alarm to plant operators when the 0-RI-2191 adjustable setpoint has been exceeded.

(i) When this monitor is operable, a value for the adjustable setpoint shall be calculated prior to each release of a WGDT as shown below.

(2) Calculating the adjustable setpoint for 0-RI-2191

(a) The adjustable setpoint is based on the specific activity of the radionuclides in the undiluted gaseous waste (as determined by radiochemical analysis per Control 4.11.2.1.2), and is calculated as shown below.

ADJUSTABLE SETPOINT FOR 0-RI-2191

$$S_{adj} \leq 1.50\,[\Sigma(A_{iu})(e_i) + Bkg] \qquad \text{Eq. 28G}^1$$

S_{adj} = the adjustable setpoint for 0-RI-2191 (cpm)

1.50 = a constant, actually a safety factor, which allows for fluctuation in radiation monitor response (unitless)

This safety factor helps ensure the release is not unnecessarily terminated due to (1) electronic anomalies which cause spurious monitor responses, (2) statistical fluctuations in disintegration rates, (3) statistical fluctuations in detector efficiencies, (4) errors associated with sample analysis, and (5) errors associated with monitor calibrations.[2]

F_u = maximum allowed undiluted radwaste flow rate (cubic meters per second)

The maximum allowed undiluted radwaste flow rate for a WGDT is tabulated in Attachment 7.

A_{iu} = specific activity of radionuclide, i, in the undiluted waste stream (microcuries per milliliter)

e_i = absolute detector efficiency for nuclide, i (cpm/microcuries per milliliter)

The detector efficiency for each radionuclide may be calculated from data collected during calibration of the radiation monitor.

Bkg = an approximation of the detector background (cpm)

---

(3) Documenting the adjustable setpoint for 0-RI-2191

(a) Whenever the adjustable setpoint is calculated, the specific values chosen for each of the variables shall be documented in accordance with approved CHEMISTRY SECTION procedures (e.g., CP-604).

(4) Changing the adjustable setpoint for 0-RI-2191

(a) In all cases, the adjustable setpoint shall be set to a value which is less than or equal to the fixed setpoint.

(b) If the adjustable setpoint exceeds the maximum range of the monitor, the setpoint shall be adjusted to a value which falls within the normal operating range of the monitor.

(c) CHEMISTRY SECTION procedures (e.g., CP-604) contain administrative controls associated with calculating and approving an adjustable setpoint.

(d) Whenever this monitor is operable, the calculated value for the adjustable setpoint shall be entered into the plant computer prior to each release of a WGDT via the main vent.

---

1 Equation 28G has been derived from NUREG-0133, Addendum, page AA-1.

2 The "analysis errors" and "calibration errors" refer to errors which are within established quality assurance and quality control limits.

j) The low setpoint for 0-RI-2191

(1) This alarm is integral to the main vent monitor, as purchased from the supplier.

(2) The current value for the low setpoint is specified in the CCNPP Alarm Manual.

(3) The low setpoint may be used to determine the **OPERABILITY** of this monitor (per Control 4.3.3.9, **CHANNEL FUNCTIONAL TEST**).

(4) The alarm generated by the low setpoint may be used to terminate a release in the event 0-RI-2191 fails (i.e., downscale failure or circuit failure) in accordance with Control 4.3.3.9.

(5) The low setpoint calculations are not described in the ODCM.

(6) Changes to the low setpoint are controlled by EN-1-100.

ANNUAL TOTAL BODY DOSE RATE DUE TO NOBLE GASES IN GASEOUS EFFLUENTS

1. Introduction

a) 10 CFR 20.1301 specifies dose rate limits associated with the release of radioactive materials to **UNRESTRICTED AREAS**.

b) Radiological effluent controls have been established to implement the requirements of 10 CFR 20.1301. The 10 CFR 50 Appendix I, Design Objectives for ALARA Radioactive Effluents, upon which these calculations are based, are more restrictive than the public dose limits of 10 CFR 20.1301.

c) These radiological effluent controls are described below.

2. Radiological Effluent Controls

a) The annual total body dose rate, due to noble gases in gaseous waste discharged to **UNRESTRICTED AREAS**, shall be less than 500 mr/yr (per Control 3.11.2.1).

b) The routine surveillances which are performed to verify compliance with this radiological effluent control is described below.

3. Surveillance Requirement

a) The annual total body dose rate, due to noble gases in all gaseous effluents discharged from the site, shall be determined in accordance with equation 7G (per Control 4.11.2.1.1).

b) The results of the radioactive gaseous waste sampling and analysis program (required by Control 4.11.2.1.2, and implemented by various CCNPP CHEMISTRY SECTION procedures) are used to calculate the annual total body dose rate due to noble gases in gaseous effluents.

c) The plant group(s) responsible for performing the required surveillances are identified below.

4. Responsible Plant Organization(s)

a) The CHEMISTRY SECTION is responsible for calculating the annual total body dose rate due to noble gases in gaseous effluents.

b) The CCNPP CHEMISTRY SECTION calculates the annual total body dose rate whenever the appropriate initiating conditions are present.

c) These initiating conditions are contained in the following section.

5. Initiating Conditions

a) The annual total body dose rate due to noble gases in gaseous effluents is calculated for each release of a WGDT.

b) The annual total body dose rate due to noble gases in gaseous effluents is calculated for each vent of a containment building.

c) The annual total body dose rate due to noble gases in gaseous effluents is calculated for each **PURGE** of a containment building.

d) The annual total body dose rate due to noble gases in gaseous effluents is calculated at least weekly[1] for CONTINUOUS discharges from plant vent stacks.

e) The annual total body dose rate due to noble gases in gaseous effluents is calculated for each discharge of combustion products resulting from the burning of contaminated oil.

f) The annual total body dose rate due to noble gases in gaseous effluents is calculated for each **ABNORMAL AND/OR UNANTICIPATED RADIOACTIVE GAS RELEASE.**

g) Whenever the correct initiating conditions are present, the annual total body dose rates shall be calculated as described below.

6. Calculation Methodology

a) The annual total body dose rate, at the **SITE BOUNDARY**, due to noble gases in gaseous effluents released to **UNRESTRICTED AREAS** shall be calculated in accordance with equation 7G.[2]

---

1 The frequency is controlled by the implementing procedure, and is based on plant conditions. Under no conditions shall the frequency be less than once per month (Control 4.11.2.1.1 or 4.11.2.1.2, Table 4.11-2).

2 The alarm and trip setpoints ... shall be determined and adjusted in accordance with the methodology and parameters of the ODCM. (Control 3.3.3.9).

ANNUAL TOTAL BODY DOSE RATE DUE TO NOBLE GASES IN ALL GAS RELEASES

$$D_{t0} = \Sigma D_{tr} \qquad \text{Eq. 7G}$$

D_{t0} = the site-boundary annual total body dose rate due to noble gases in all gaseous effluents discharged (simultaneously) from the site (mrem/year)

D_{tr} = the site-boundary annual total body dose rate due to noble gases in release, r (mrem/year)

Sum for all releases, r, which are discharged simultaneously.

An example of a SIMULTANEOUS RELEASE would include the release of noble gas radionuclides from the Unit 1 plant vent stack while also discharging noble gases from the Unit 2 plant vent stack.

An example of a SIMULTANEOUS RELEASE would include the release of noble gas radionuclides from the Unit 1 plant vent stack while also discharging a waste gas decay tank.

Calculate the values of D_{tr} for each SIMULTANEOUS RELEASE as shown below.

---

b) At CCNPP, two methods exist for calculating D_{tr} (i.e., annual total body dose rate at the **SITE BOUNDARY** due to noble gases contained in a gaseous radwaste release, r, discharged from the site).

(1) The rigorous method shall be used IF a computer system and the appropriate software are available.

(2) The simplified method may be used IF a computer system and the appropriate software are NOT available.

(3) These methods, as well as additional supporting information, are presented in the following sections.

c) Rigorous method

(1) Solution of the following equation may prove too rigorous for routine use unless a computer system and appropriate software are available.

(2) If a computer system and the appropriate software are available, the annual total body dose rate due to noble gases in gaseous effluents discharged from the site to **UNRESTRICTED AREAS** shall be calculated in accordance with equation 8G.

ANNUAL TOTAL BODY DOSE RATE DUE TO NOBLE GASES IN GAS RELEASE, r (RIGOROUS METHOD)

$$D_{tr} = (x/Q)\,[\Sigma\,(K_i)\,(Q_{ir})] \qquad \text{Eq. 8G}^1$$

Where,

x/Q = the highest calculated annual average relative concentration for any area at or beyond the **UNRESTRICTED AREA** boundary (2.2E-6 seconds per cubic meter)

All releases are considered "long-term" releases[2], and as such, the highest historical annual average dispersion factor, (x/Q), is used in the dose rate calculations.

The highest annual average dispersion factor (x/Q) is 2.2E-6 (UFSAR, 2.3.6.3) for purposes of routine, long-term concentrations (e.g., routine noble gas releases) (UFSAR, 2.3.6.3)

The maximum annual average on-shore concentrations occur in the southeast sector at a distance of 1300 meters for purposes of routine, long-term concentrations (e.g., routine noble gas releases) (UFSAR, 2.3.6.3)

K_i = the total body dose factor due to gamma emissions for each identified noble gas radionuclide, i (mrem/yr per microcurie/cubic meter)

The total-body dose factors for gamma rays from noble gas radionuclides were obtained from Regulatory Guide 1.109, Appendix B, Table B-1.

The total-body dose factors for various noble gas radionuclides are tabulated in Attachment 10.

Q_{ir} = the release rate of noble gas radionuclide, i, in (simultaneous) gaseous release, r (microcuries/second).

Calculate the values of Q_{ir} for each SIMULTANEOUS RELEASE as shown below.

---

1 Equations 8G has been derived from NUREG-0133, 5.2.1, and Regulatory Guide 1.109 (Appendix B, Equation B-8 and Section C.2.e).

2 NUREG-0133, 3.3

INSTANTANEOUS RELEASE RATE OF NOBLE GAS NUCLIDE i IN GASEOUS RELEASE r

$$Q_{ir} = (A_{ir})(F_r)(c') \qquad \text{Eq. 9G}$$

Where,

A_{ir} = the specific activity of noble gas radionuclide, i, in (simultaneous) release, r (microcuries/cubic centimeter)

F_r = the discharge flow rate for (simultaneous) release, r (cubic meters per second)

If the discharge flow rate is unknown (e.g., the release has not been conducted), the "Maximum Discharge Flow Rate" listed on Attachments 7 or 8 may be used to calculate the annual total body dose rate.

Whenever possible, the actual discharge flow rate determined from actual release conditions (e.g., initial pressure, volume, and temperature of a WGDT along with final pressure and temperature) shall be used in equation 9G.

Additional guidance for calculating discharge flow rates may be contained in approved CHEMISTRY SECTION procedures.

c' = a conversion constant (1E6 cubic centimeters per cubic meter)

---

d) Simplified method

(1) If a computer system and the appropriate software are NOT available, the annual total body dose rate due to noble gases in gaseous effluents discharged from the site to **UNRESTRICTED AREAS** may be calculated in accordance with equation 10G.

ANNUAL TOTAL BODY DOSE RATE DUE TO NOBLE GASES IN GAS RELEASE, r (SIMPLIFIED METHOD)

$$D_{tr} = [(x/Q)(K_{avg})/(K_{sf})]\,\Sigma Q_{ir} \qquad \text{Eq. 10G}^{1}$$

Where,

x/Q = the highest calculated annual average relative concentration for any area at or beyond the **UNRESTRICTED AREA** boundary (2.2E-6 seconds per cubic meter)

All releases are considered "long-term" releases[2], and as such, the highest historical annual average dispersion factor, (x/Q), is used in the dose rate calculations.

The highest annual average dispersion factor (x/Q) is 2.2E-6 (UFSAR, 2.3.6.3) for purposes of routine, long-term concentrations (e.g., routine noble gas releases) (UFSAR, 2.3.6.3)

---

1 Equations 10G has been derived from NUREG-0133, 5.2.1, and historical, site-specific data.

2 NUREG-0133, 3.3

The maximum annual average on-shore concentrations occur in the southeast sector at a distance of 1300 meters for purposes of routine, long-term concentrations (e.g., routine noble gas releases) (UFSAR, 2.3.6.3)

K_{avg} = the empirically derived, site specific, average, total body, dose factor due to gamma emissions from TYPICAL GASEOUS EFFLUENTS (mrem/yr per microcurie/cubic meter)

A site-specific, average, gamma total body dose factor for TYPICAL GASEOUS EFFLUENTS has been calculated from historical data.

The calculation of this site-specific, average, gamma air dose factor is presented on Attachment 11 (use section 3.4.5 of the old ODCM.)

Refer to the table on Attachment 11 for the current value for the empirically derived, site specific, average gamma total body dose factor.

K_{sf} = a constant, actually a safety factor, which is the ratio of the CCNPP annual total body dose rate limit to the annual total body dose rate limit of Control 3.11.2.1, (unitless)

The safety factor chosen shall be less than or equal to 1.00. This ensures the annual total body dose rate is always less than or equal to the annual total body dose rate limit of Control 3.11.2.1.

A safety factor of 1.00 will yield an annual total body dose rate which corresponds to the annual total body dose rate limit of Control 3.11.2.1.

A safety factor of 0.500 will yield an annual total body dose rate which corresponds to one-half the annual total body dose rate limit of Control 3.11.2.1.

It is recommended that a safety factor of 1.0 be used for calculating the annual total body dose rate, however, other values--not to exceed 1.00--may be used as directed by the General Supervisor Chemistry.

The particular value selected for the safety factor is somewhat arbitrary, however a safety factor does provide plant personnel with a degree of administrative control over the use of simplified equations for generating radioactive gaseous release permits. This administrative control is designed to minimize the possibility of violating Control 3.11.2.1 when simplifying assumptions are used.

The use of a safety factor is consistent with the ALARA philosophy that licensees should make every reasonable effort to maintain radiation exposures, and releases of radioactive materials in effluents to **UNRESTRICTED AREAS**, as low as is reasonably achievable.

This safety factor has been included in equation 10G to account for any potential nonconservatism associated with applying the empirically derived total body gamma dose factor, K_{avg}, to all radionuclides identified in the gaseous release. Such nonconservatism could conceivable be present whenever radionuclides having a total body gamma dose factor greater than K_{avg} are present in a gaseous release.

Q_{ir} = the release rate of noble gas radionuclide, i, in (simultaneous) gaseous release, r (microcuries/second)

Calculate the values of Q_{ir} for each SIMULTANEOUS RELEASE in accordance with equation 9G.

INSTANTANEOUS RELEASE RATE OF NOBLE GAS NUCLIDE i IN GASEOUS RELEASE r

$$Q_{ir} = (A_{ir})(F_r)(c') \qquad \text{Eq. 9G}$$

Where,

A_{ir} = the specific activity of noble gas radionuclide, i, in (simultaneous) release, r (microcuries/cubic centimeter)

F_r = the discharge flow rate for (simultaneous) release, r (cubic meters per second)

If the discharge flow rate is unknown (e.g., the release has not been conducted), the "Maximum Discharge Flow Rate" listed on Attachments 7 or 8 may be used to calculate the annual total body dose rate.

Whenever possible, the actual discharge flow rate determined from actual release conditions (e.g., initial pressure, volume, and temperature of a WGDT along with final pressure and temperature) shall be used in equation 9G.

Additional guidance for calculating discharge flow rates may be contained in approved CHEMISTRY SECTION procedures.

c' = a conversion constant (1E6 cubic centimeters per cubic meter)

---

e) Radiation monitoring system algorithms

(1) The plant vent stack radiation monitoring systems display values which are proportional to the annual total body dose rates due to noble gases emanating from the plant vent stacks.

(2) The values displayed by the plant vent stack radiation monitoring systems are not used for the purpose of effluent accountability per se, but the values displayed can provide a gross approximation of annual total body dose rate (see Control 3.3.3.9).

(3) The Westinghouse Main Vent Noble Gas Monitor, 1/2-RE-5415, is an analog system and does not employ instrument algorithm to determine noble gas release rates.

(a) It is possible to approximate the noble gas release rates for the Unit 1 and Unit 2 main vents based on output from 1/2-RI-5415.

(b) These calculations are described elsewhere in the ODCM. (See equation 4G in the section "Calculating the Fixed Setpoint for 1/2-RI-5415.")

(4) The Sorrento WRNGM, 1/2-RE-5416, is a digital radiation monitoring system which employs an instrument algorithm to determine noble release rates (microcuries per second).

(a) It is possible to approximate the noble gas release rates for the Unit 1 and Unit 2 main vents based on output from 1/2-RIC-5415.

(b) These calculations are described elsewhere in the ODCM. (See equation 1G in the section "Calculating the Fixed High-High Alarm Setpoint for 1/2-RIC-5415.")

(c) The instrument algorithms and the (data base) values accessed by the instrument algorithms are controlled by EN-1-100.

f) Once the calculations above have been completed, the calculation results are compared to the applicable limits and corrective **ACTIONS** are initiated as described below.

7. Corrective actions

a) CHEMISTRY SECTION surveillance procedures shall contain/and or reference administrative and/or Control limits for annual total body dose rates for gaseous effluents and shall specify corrective actions to be initiated when these limits are exceeded.

b) Refer to Control 3.11.2.1 for actions to be taken in the event the calculated annual total body dose rate due to noble gases in gaseous effluents exceeds 500 mr/yr.

ANNUAL SKIN DOSE RATE DUE TO NOBLE GASES IN GASEOUS EFFLUENTS

1. Introduction

   a) 10 CFR 20.1301 specifies dose rate limits associated with the release of radioactive materials to **UNRESTRICTED AREAS.**

   b) Radiological effluent controls have been established to implement the requirements of 10 CFR 20.1301.

   c) These radiological effluent controls are described below.

2. Radiological Effluent Controls

   a) The annual skin dose rate, due to noble gases in gaseous waste discharged to **UNRESTRICTED AREAS**, shall be less than 3000 mr/yr (per Control 3.11.2.1).

   b) The routine surveillances which are performed to verify compliance with this radiological effluent controls are described below.

3. Surveillance Requirement

   a) The annual skin dose rate at the **SITE BOUNDARY**, due to noble gases in all gaseous effluents discharged from the site, shall be determined in accordance with equation 11G (per Control 4.11.2.1.1).

   b) The results of the radioactive gaseous waste sampling and analysis program (required by Control 4.11.2.1.2, and implemented by various CCNPP CHEMISTRY SECTION procedures) are used to calculate the annual skin dose rate due to noble gases in gaseous effluents.

   c) The plant group(s) responsible for performing the required surveillances are identified below.

4. Responsible Plant Organization(s)

   a) The CHEMISTRY SECTION is responsible for calculating the annual skin dose rate due to noble gases in gaseous effluents.

   b) The CCNPP CHEMISTRY SECTION calculates the annual skin dose rate whenever the appropriate initiating conditions are present.

   c) These initiating conditions are contained in the following section.

5. Initiating Conditions

   a) The annual skin dose rate due to noble gases in all gaseous effluents discharged from the site is calculated for each release of a WGDT.

   b) The annual skin dose rate due to noble gases in all gaseous effluents discharged from the site is calculated for each vent of a containment building.

c) The annual skin dose rate due to noble gases in all gaseous effluents discharged from the site is calculated for each **PURGE** of a containment building.

d) The annual skin dose rate due to noble gases in all gaseous effluents discharged from the site is calculated at least weekly[1] for CONTINUOUS discharges from plant vent stacks.

e) The annual skin dose rate due to noble gases in all gaseous effluents discharged from the site is calculated for each discharge of combustion products resulting from the burning of contaminated oil.

f) The annual skin dose rate due to noble gases in all gaseous effluents discharged from the site is calculated for each **ABNORMAL AND/OR UNANTICIPATED RADIOACTIVE GAS RELEASE.**

g) Whenever the correct initiating conditions are present, the annual skin dose rates shall be calculated as described below.

6. Calculation Methodology

a) The annual skin dose rate, at the **SITE BOUNDARY**, due to noble gases in all gaseous effluents discharged simultaneously from the site to **UNRESTRICTED AREAS** shall be calculated in accordance with equation 11G.[2]

ANNUAL SKIN DOSE RATE DUE TO NOBLE GASES IN ALL SIMULTANEOUS GAS RELEASES, r

$$D_{s0} = \sum D_{sr} \qquad \text{Eq. 11G}$$

D_{s0} = the annual skin dose rate at the **SITE BOUNDARY** due to noble gases in all simultaneous discharges of gaseous radwaste from the site ("Unit 0")

D_{sr} = the annual skin dose rate at the **SITE BOUNDARY** due to noble gases in release, r

Sum for all releases, r, which are discharged simultaneously.

An example of a SIMULTANEOUS RELEASE would include the release of noble gas radionuclides from the Unit 1 plant vent stack while also discharging noble gases from the Unit 2 plant vent stack.

An example of a SIMULTANEOUS RELEASE would include the release of noble gas radionuclides from the Unit 1 plant vent stack while also discharging a waste gas decay tank.

Calculate the values of D_{sr} for each SIMULTANEOUS RELEASE as shown below.

---

1 The frequency is controlled by the implementing procedure and is based on plant conditions. Under no conditions shall the frequency be less than once per month (Control 4.11.2.1.1 or 4.11.2.1.2, Table 4.11-2).

2 The alarm and trip setpoints ... shall be determined and adjusted in accordance with the methodology and parameters of the ODCM. (Control 3.3.3.9).

b) At CCNPP, two methods exist for calculating D_{sr} (i.e., annual total skin dose rate at the **SITE BOUNDARY** due to noble gases contained in a gaseous radwaste release, r, discharged from the site).

(1) The rigorous method shall be used IF a computer system and the appropriate software are available.

(2) The simplified method may be used IF a computer system and the appropriate software are NOT available.

(3) These methods, as well as additional supporting information, are presented in the following sections.

c) Rigorous Method

(1) Solution of the following equation may prove too rigorous for routine use unless a computer system and appropriate software are available.

(2) If a computer system and the appropriate software are available, the annual skin dose rate due to noble gases in gaseous release, r, discharged from the site to **UNRESTRICTED AREAS** shall be calculated in accordance with equation 12G.

ANNUAL SKIN DOSE RATE DUE TO NOBLE GASES IN GAS RELEASE, r
(RIGOROUS METHOD)

$$D_{sr} = (x/Q)\sum\{[L_i + (1.1)(M_i)](Q_{ir})\} \qquad \text{Eq. 12G}^1$$

Where,

x/Q = the highest calculated annual average relative concentration for any area at or beyond the **UNRESTRICTED AREA** boundary (2.2E-6 seconds per cubic meter)

All releases are considered "long-term" releases[1], and as such, the highest historical annual average dispersion factor, (x/Q), is used in the dose rate calculations.

The highest annual average dispersion factor (x/Q) is 2.2E-6 (UFSAR, 2.3.6.3) for purposes of routine, long-term concentrations (e.g., routine noble gas releases) (UFSAR, 2.3.6.3)

The maximum annual average on-shore concentrations occur in the southeast sector at a distance of 1300 meters for purposes of routine, long-term concentrations (e.g., routine noble gas releases) (UFSAR, 2.3.6.3)

L_i = the skin dose factor due to beta emissions for each identified noble gas radionuclide, i (mrem/yr per microcurie/cubic meter)

The beta skin dose factors have been obtained from Regulatory Guide 1.109, Appendix B, Table B-1.

The beta skin dose factors for various noble gas radionuclides are tabulated in Attachment 10.

---

1 Equation 12G has been derived from NUREG-0133, 5.2.1, and Regulatory Guide 1.109 (Appendix B, Equation B-9 and Section C.2.f).

M_i = the air dose factor due to gamma emissions for each identified noble gas radionuclide, i (mrad/yr per microcurie/cubic meter)

The gamma air dose factors have been obtained from Regulatory Guide 1.109, Appendix B, Table B-1.

The gamma air dose factors for various noble gas radionuclides are tabulated in Attachment 10.

1.1 = The conversion constant, 1.1 mrem/mrad, represents the skin dose (1.1 mrem) equivalent to air dose (1.0 mrad), and is used to convert air dose to skin dose.

Q_{ir} = the release rate of noble gas radionuclide, i, in (simultaneous) release, r (microcuries/second).

This value shall be calculated in accordance with equation 9G.

INSTANTANEOUS RELEASE RATE OF NOBLE GAS NUCLIDE i IN GASEOUS RELEASE r

$$Q_{ir} = (A_{ir})(F_r)(c') \qquad \text{Eq. 9G}$$

A_{ir} = the specific activity of noble gas radionuclide, i, in (simultaneous) release, r (microcuries/cubic centimeter)

F_r = the discharge flow rate for (simultaneous) release, r (cubic meters per second)

If the discharge flow rate is unknown (e.g., the release has not been conducted), the "Maximum Discharge Flow Rate" listed on Attachments 7 or 8 may be used to calculate the annual skin dose rate.

Whenever possible, the actual discharge flow rate determined from actual release conditions (e.g., initial pressure, volume, and temperature of a WGDT along with final pressure and temperature) shall be used in equation 9G.

Additional guidance for calculating discharge flow rates may be contained in approved CHEMISTRY SECTION procedures.

c' = a conversion constant (1E6 cubic centimeters per cubic meter)

d) Simplified method

(1) If a computer system and the appropriate software are NOT available, the annual skin dose rate due to noble gases in gaseous effluents discharged from the site to **UNRESTRICTED AREAS** may be calculated in accordance with equation 13G.

[1] NUREG-0133, 3.3

ANNUAL SKIN DOSE RATE DUE TO NOBLE GASES IN GAS RELEASE, r (SIMPLIFIED METHOD)

$$D_{sr} = [(x/Q)/(K_{sf})][L_{avg} + (1.1)(M_{avg})]\sum Q_{ir} \quad \text{Eq. 13G}^1$$

Where,

x/Q = the highest calculated annual average relative concentration for any area at or beyond the **UNRESTRICTED AREA** boundary (2.2E-6 seconds per cubic meter)

All releases are considered "long-term" releases[2], and as such, the highest historical annual average dispersion factor, (x/Q), is used in the dose rate calculations.

The highest annual average dispersion factor (x/Q) is 2.2E-6 (UFSAR, 2.3.6.3) for purposes of routine, long-term concentrations (e.g., routine noble gas releases) (UFSAR, 2.3.6.3)

The maximum annual average on-shore concentrations occur in the southeast sector at a distance of 1300 meters for purposes of routine, long-term concentrations (e.g., routine noble gas releases) (UFSAR, 2.3.6.3)

K_{sf} = a constant, actually a safety factor, which is the ratio of the CCNPP annual skin dose rate limit to the annual skin dose rate limit of Control 3.11.2.1, (unitless)

The safety factor chosen shall be less than or equal to 1.00. This ensures the annual skin dose rate is always less than or equal to the annual skin dose rate limit of Control 3.11.2.1.

A safety factor of 1.00 will yield an annual skin dose rate which corresponds to the annual skin dose rate limit of Control 3.11.2.1.

A safety factor of 0.500 will yield an annual skin dose rate which corresponds to one-half the annual skin dose rate limit of Control 3.11.2.1.

It is recommended that a safety factor of 1.0 be used for calculating the annual skin dose rate, however, other values--not to exceed 1.00--may be used as directed by the General Supervisor Chemistry.

The particular value selected for the safety factor is somewhat arbitrary, however a safety factor does provide plant personnel with a degree of administrative control over the use of simplified equations for generating radioactive gaseous release permits. This administrative control is designed to minimize the possibility of violating Control 3.11.2.1 when simplifying assumptions are used.

The use of a safety factor is consistent with the ALARA philosophy that licensees should make every reasonable effort to maintain radiation exposures, and releases of radioactive materials in effluents to **UNRESTRICTED AREAS**, as low as is reasonably achievable.

This safety factor has been included in equation 13G to account for any potential nonconservatism associated with applying the empirically derived skin beta dose factor, L_{avg}, to all radionuclides identified in the gaseous release. Such nonconservatism could conceivable be present whenever radionuclides having a skin beta dose factor greater than L_{avg} are present in a gaseous release.

---

1 Equation 13G has been derived from NUREG-0133, 5.2.1, and Regulatory Guide 1.109 (Appendix B, Equation B-9 and Section C.2.f).

2 NUREG-0133, 3.3

L_{avg} = the empirically derived, site specific, average, skin dose factor due to beta emissions from TYPICAL GASEOUS EFFLUENTS (mrem/yr per microcurie/cubic meter)

A site-specific, average, beta skin dose factor for TYPICAL GASEOUS EFFLUENTS has been calculated from historical data.

The calculation of this site-specific, average, beta skin dose factor is presented on Attachment 11.

Refer to the table on Attachment 11 for the current value for the empirically derived, site specific, average beta skin dose factor.

M_{avg} = the empirically derived, site specific, average, air dose factor due to gamma emissions from TYPICAL GASEOUS EFFLUENTS (mrad/yr per microcurie/cubic meter)

A site-specific, average, gamma air dose factor for TYPICAL GASEOUS EFFLUENTS has been calculated from historical data.

The calculation of this site-specific, average, gamma air dose factor is presented on Attachment 11.

Refer to the table on Attachment 11 for the current value for the empirically derived, site specific, average gamma air dose factor.

1.1 = The conversion constant, 1.1 mrem/mrad, represents the skin dose (1.1 mrem) equivalent to air dose (1.0 mrad), and is used to convert air dose to skin dose.

Q_{ir} = the release rate of noble gas radionuclide, i, in (simultaneous) release, r (microcuries/second)

This value shall be calculated in accordance with equation 9G.

INSTANTANEOUS RELEASE RATE OF NOBLE GAS NUCLIDE i IN GASEOUS RELEASE r

$$Q_{ir} = (A_{ir})(F_r)(c') \qquad \text{Eq. 9G}$$

A_{ir} = the specific activity of noble gas radionuclide, i, in (simultaneous) release, r (microcuries/cubic centimeter)

F_r = the discharge flow rate for (simultaneous) release, r (cubic meters per second)

If the discharge flow rate is unknown (e.g., the release has not been conducted), the "Maximum Discharge Flow Rate" listed on Attachments 7 or 8 may be used to calculate the annual skin dose rate.

Whenever possible, the actual discharge flow rate determined from actual release conditions (e.g., initial pressure, volume, and temperature of a WGDT along with final pressure and temperature) shall be used in equation 9G.

Additional guidance for calculating discharge flow rates may be contained in approved CHEMISTRY SECTION procedures.

c' = a conversion constant (1E6 cubic centimeters per cubic meter)

e) Radiation monitoring system algorithms

(1) The plant vent stack radiation monitoring systems display values which are proportional to the annual skin dose rate due to noble gases emanating from the plant vent stacks.

(2) The values displayed by the plant vent stack radiation monitoring systems are not used for the purpose of effluent accountability per se, but the values displayed can provide a gross approximation of annual skin dose rate (see Control 3.3.3.9).

(3) The Westinghouse Main Vent Stack Noble Gas Monitor, 1/2-RE-5415, is an analog system and does not employ instrument algorithm to determine noble release rates.

(a) It is possible to approximate the noble gas release rates for the Unit 1 and Unit 2 main vents based on output from 1/2-RI-5415.

(b) These calculations are described elsewhere in the ODCM. (See equation 4G in the section "Calculating the Fixed Setpoint for 1/2-RI-5415.")

(4) The Sorrento WRNGM, 1/2-RE-5416, is a digital radiation monitoring system which employs an instrument algorithm to determine noble release rates (microcuries per second).

(a) It is possible to approximate the noble gas release rates for the Unit 1 and Unit 2 main vents based on output from 1/2-RIC-5415.

(b) These calculations are described elsewhere in the ODCM. (See equation 1G in the section "Calculating the Fixed High-High Alarm Setpoint for 1/2-RIC-5415.")

(5) The instrument algorithms and the (data base) values accessed by the instrument algorithms are controlled by EN-1-100.

f) Once the calculations above have been completed, the calculation results are compared to the applicable limits and corrective **ACTIONS** are initiated as described below.

7. Corrective actions

a) CHEMISTRY SECTION surveillance procedures shall contain/and or reference administrative and/or Control limits for annual skin dose rate for gaseous effluents and shall specify corrective actions to be initiated when these limits are exceeded.

b) Refer to Control 3.11.2.1 for actions to be taken in the event the calculated annual skin dose rate exceeds 3000 mr/yr.

ANNUAL ORGAN DOSE RATES DUE TO IODINES AND PARTICULATES IN GASEOUS EFFLUENTS

1. Introduction

   a) 10 CFR 20.1301 specifies dose rate limits associated with the release of radioactive materials to **UNRESTRICTED AREAS.**

   b) Radiological effluent controls were originally established to implement the requirements of 10 CFR 20.1301. The 10 CFR 50 Appendix I, Design Objectives for ALARA Radioactive Effluents, upon which these calculations are based, are more restrictive than the public dose limits of 10 CFR 20.1301.

   c) These radiological effluent controls are described below.

2. Radiological Effluent Controls

   a) The annual organ dose rates, due to iodines and particulates in gaseous waste discharged to **UNRESTRICTED AREAS**, shall be less than 1500 mr/yr (per Control 3.11.2.1).

   b) The routine surveillances which are performed to verify compliance with this radiological effluent controls are described below.

3. Surveillance Requirements

   a) The CHEMISTRY Sections sampling and analysis procedure(s) shall describe the CCNPP radioactive gaseous waste sampling and analysis program (required by Control 4.11.2.1.2).

   b) The results of the radioactive gaseous waste sampling and analysis program are used to calculate the annual organ dose rates due to iodines and particulates in gaseous effluents.

   c) The plant group(s) responsible for performing the required surveillances are identified below.

4. Responsible Plant Organization(s)

   a) The CHEMISTRY SECTION is responsible for calculating the annual organ dose rates due to iodines and particulates in gaseous effluents.

   b) The CHEMISTRY SECTION calculates the annual organ dose rates whenever the appropriate initiating conditions are present.

   c) These initiating conditions are contained in the following section.

5. Initiating Conditions

a) The annual organ dose rate--for each organ and at the **SITE BOUNDARY**--due to iodines and particulates in gaseous effluents is calculated at least weekly[1] for CONTINUOUS discharges from plant vent stacks.

b) The annual organ dose rate--for each organ and at the **SITE BOUNDARY**--due to iodines and particulates in gaseous effluents is calculated for each discharge of combustion products resulting from the burning of contaminated oil.

c) The annual organ dose rate--for each organ and at the **SITE BOUNDARY**--due to iodines and particulates in gaseous effluents is calculated for each **ABNORMAL AND/OR UNANTICIPATED RADIOACTIVE GAS RELEASE**[2].

d) Whenever the correct initiating conditions are present, the annual organ dose rates shall be calculated as described below.

6. Calculation Methodology

a) The annual organ dose rate, at the **SITE BOUNDARY**, due to iodine and particulate radionuclides in gaseous effluents released to **UNRESTRICTED AREAS** shall be calculated in accordance with equation 14G.[3]

ANNUAL ORGAN, o , DOSE RATE DUE TO IODINES AND PARTICULATES IN ALL SIMULTANEOUS GASEOUS RELEASES, r FROM THE SITE, 0

$$D_{o0} = \Sigma D_{or} \qquad \text{Eq. 14G}$$

D_{o0} = the site-boundary annual organ dose rate due to iodine and particulate radionuclides in all gaseous effluents discharged simultaneously from the site ("Unit 0")

D_{or} = the site-boundary annual organ dose rate due to iodine and particulate radionuclides in release, r

Sum for all releases, r, which are discharged simultaneously.

An example of a SIMULTANEOUS RELEASE would include the release of iodines and particulate radionuclides from the Unit 1 plant vent stack while also discharging iodines and particulate radionuclides from the Unit 2 plant vent stack.

An example of a SIMULTANEOUS RELEASE would include the release of iodine and particulate radionuclides from the Unit 1 plant vent stack while also discharging a waste gas decay tank.

---

1 The frequency is controlled by the implementing procedure and is based on plant conditions. Under no conditions shall the frequency be less than once per month (Control 4.11.2.1.1 or 4.11.2.1.2, Table 4.11-2).

2 See the definition of ABNORMAL/UNANTICIPATED GAS RELEASE in the DEFINITIONS section of the ODCM.

3 The alarm and fixed setpoints ... shall be determined and adjusted in accordance with the methodology a parameters of the ODCM. (Control 3.3.3.9).

Calculate the values of D_{or} for each SIMULTANEOUS RELEASE as shown below.

b) At CCNPP, two methods exist for calculating D_{or} (i.e., the annual organ dose rates due to iodine and particulate radionuclides in gaseous effluents released to **UNRESTRICTED AREAS**).

(1) The rigorous method shall be used IF a computer system and the appropriate software are available.

(2) The simplified method may be used IF a computer system and the appropriate software are NOT available.

(3) These methods, as well as additional supporting information, are presented in the following sections.

c) Rigorous Method

(1) Solution of the following equation may prove too rigorous for routine use unless a computer system and appropriate software are available.

(2) If a computer system and the appropriate software are available, the annual organ dose rates due to iodines and particulates in gaseous effluents released to an **UNRESTRICTED AREA** shall be calculated in accordance with equation 15G.

ANNUAL ORGAN, o, DOSE RATE DUE TO IODINES AND PARTICULATES IN GASEOUS RELEASE, r (RIGOROUS METHOD)

$$D_{or} = (x/Q)\,\Sigma(P_i)(Q_{ir}) \qquad \text{Eq. 15G}^1$$

Where,

x/Q = the highest calculated annual average relative concentration for any area at or beyond the **UNRESTRICTED AREA** boundary (2.2E-6 seconds per cubic meter)

All releases are considered "long-term" releases[1], and as such, the highest historical annual average dispersion factor, (x/Q), is used in the dose rate calculations.

The highest annual average dispersion factor (x/Q) is 2.2E-6 (UFSAR, 2.3.6.3) for purposes of routine, long-term concentrations (UFSAR, 2.3.6.3).

The maximum annual average on-shore concentrations occur in the southeast sector at a distance of 1300 meters for purposes of routine, long-term concentrations (UFSAR, 2.3.6.3).

P_i = the maximum organ inhalation pathway dose parameter for iodine and particulate radionuclides, i, for the most restrictive (i.e., child) age group (mrem/year per microcurie/cubic meter)

The inhalation pathway dose parameters have been obtained in accordance with NUREG-0133, 5.2.1.1.

[1] Equation 15G has been derived from NUREG-0133, 5.2.1.

The pathway dose factor specified in NUREG-0133, 5.2.1.b, specifies calculating the exposure to the "INFANT" age group, where the exposure is due to a combination of three separate pathways.

1) inhalation,

2) ground plane, and

3) food.

The latest NRC guidance has deleted the requirement to include the ground plane and food dose contributions when calculating maximum organ doses, therefore no pathway dose factors are calculated for the ground plane or food pathways.

The latest NRC guidance has changed the critical receptor age group from "infant" to "child."

The child, inhalation pathway dose parameters for various radionuclides, sorted by critical organ, are tabulated in Attachment 12.

It should be noted that the dose parameters, P_i, (listed in Attachment 12) calculated in accordance with NUREG-0133, section 5.2.1.1 and the latest NRC guidance are numerically equal to the "Inhalation Pathway Factors," K_i, calculated in accordance with NUREG-0133, section 5.3.1.1. As a result the ODCM does not contain two separate tables for values of P_i and K_i.

Q_{ir} = the release rate of iodine or particulate radionuclide, i, in (simultaneous) gaseous release, r (microcuries/second).

Calculate the values of Q_{ir} for each SIMULTANEOUS RELEASE in accordance with equation 9G.

INSTANTANEOUS RELEASE RATE OF IODINE OR PARTICULATE NUCLIDE i IN GASEOUS RELEASE r

$$Q_{ir} = (A_{ir})(F_r)(c') \qquad \text{Eq. 9G}$$

A_{ir} = the specific activity of iodine or particulate radionuclide, i, in (simultaneous) release, r (microcuries/cubic centimeter)

F_r = the discharge flow rate for (simultaneous) release, r (cubic meters per second)

If the discharge flow rate is unknown (e.g., the release has not been conducted), the "Maximum Discharge Flow Rate" listed on Attachments 7 or 8 may be used to calculate the annual organ dose rate.

Additional guidance for calculating discharge flow rates may be contained in approved CHEMISTRY SECTION procedures.

c' = a conversion constant (1E6 cubic centimeters per cubic meter)

---

[1] NUREG-0133, 3.3

d) simplified method

(1) If a computer system and the appropriate software are NOT available, the annual organ dose rate due to iodines and particulates in gaseous effluents discharged from the site to **UNRESTRICTED AREAS** may be calculated in accordance with equation 16G.

ANNUAL ORGAN, o, DOSE RATE DUE TO IODINES AND PARTICULATES IN GASEOUS RELEASE, r (SIMPLIFIED METHOD)

$$D_{or} = (1/K_{sf})(x/Q)(P_{max})\sum Q_{ir} \qquad \text{Eq. 16G}^{1}$$

Where,

K_{sf} = a constant, actually a safety factor, which is the ratio of the CCNPP organ dose rate limit to the organ dose rate limit of Control 3.11.2.1, (unitless)

The safety factor chosen shall be less than or equal to 1.00. This ensures the organ dose rate is always less than or equal to the organ dose rate limit of Control 3.11.2.1.

A safety factor of 1.00 will yield an organ dose rate which corresponds to the organ dose rate limit of Control 3.11.2.1.

A safety factor of 0.500 will yield an organ dose which corresponds to one-half the organ dose rate limit of Control 3.11.2.1.

It is recommended that a safety factor of 1.0 be used for calculating the organ dose rate, however, other values--not to exceed 1.00--may be used as directed by the General Supervisor Chemistry.

The particular value selected for the safety factor is somewhat arbitrary, however a safety factor does provide plant personnel with a degree of administrative control over the use of simplified equations for generating radioactive gaseous release permits. This administrative control is designed to minimize the possibility of violating Control 3.11.2.1 when simplifying assumptions are used.

The use of a safety factor is consistent with the ALARA philosophy that licensees should make every reasonable effort to maintain radiation exposures, and releases of radioactive materials in effluents to **UNRESTRICTED AREAS**, as low as is reasonably achievable.

This safety factor has been included in equation 16G to account for any potential nonconservatism associated with applying the dose parameter, P_{max}, to all radionuclides identified in the gaseous release. Such nonconservatism could conceivable be present whenever radionuclides having a dose parameter greater than P_{max} are present in a gaseous release.

x/Q = the highest calculated annual average relative concentration for any area at or beyond the **UNRESTRICTED AREA** boundary (2.2E-6 seconds per cubic meter)

All releases are considered "long-term" releases[1], and as such, the highest historical annual average dispersion factor, (x/Q), is used in the dose rate calculations.

---

1 Equation 16G has been derived from NUREG-0133, 5.2.1.

The highest annual average dispersion factor (x/Q) is 2.2E-6 (UFSAR, 2.3.6.3) for purposes of routine, long-term concentrations (e.g., routine noble gas releases) (UFSAR, 2.3.6.3).

The maximum annual average on-shore concentrations occur in the southeast sector at a distance of 1300 meters for purposes of routine, long-term concentrations (e.g., routine noble gas releases) (UFSAR, 2.3.6.3).

P_{max} = the most restrictive dose parameter which would be reasonably anticipated for the inhalation pathway, child age group, thyroid organ, and I-131 radionuclide (mrem/year per microcurie/cubic meter)

The inhalation pathway dose parameters have been obtained in accordance with NUREG-0133, 5.2.1.1.

The pathway dose factor specified in NUREG-0133, 5.2.1.b, specifies calculating the exposure to the "INFANT" age group, where the exposure is due to a combination of three separate pathways.

1) inhalation,

2) ground plane, and

3) food.

The latest NRC guidance has deleted the requirement to include the ground plane and food dose contributions when calculating maximum organ doses, therefore no pathway dose factors are calculated for the ground plane or food pathways.

The latest NRC guidance has changed the critical receptor age group from "infant" to "child."[1]

The child, inhalation pathway dose parameters for various radionuclides, sorted by critical organ, are tabulated in Attachment 12.

It should be noted that the dose parameters, P_i, (listed in Attachment 12) calculated in accordance with NUREG-0133, section 5.2.1.1 and the latest NRC guidance are numerically equal to the "Inhalation Pathway Factors," K_i, calculated in accordance with NUREG-0133, section 5.3.1.1. As a result the ODCM does not contain two separate tables for values of P_i and K_i.

Q_{ir} = the release rate of iodine or particulate radionuclide, i, in (simultaneous) gaseous release, r (microcuries/second).

Calculate the values of Q_{ir} for each SIMULTANEOUS RELEASE in accordance with equation 9G.

---

[1] NUREG-0133, 3.3

INSTANTANEOUS RELEASE RATE OF IODINE OR PARTICULATE NUCLIDE i IN GASEOUS RELEASE r

$$Q_{ir} = (A_{ir})(F_r)(c') \quad \text{Eq. 9G}$$

A_{ir} = the specific activity of iodine or particulate radionuclide, i, in (simultaneous) release, r (microcuries/cubic centimeter)

F_r = the discharge flow rate for (simultaneous) release, r (cubic meters per second)

If the discharge flow rate is unknown (e.g., the release has not been conducted), the "Maximum Discharge Flow Rate" listed on Attachments 7 or 8 may be used to calculate the annual organ dose rate.

Additional guidance for calculating discharge flow rates may be contained in approved CHEMISTRY SECTION procedures.

c' = a conversion constant (1E6 cubic centimeters per cubic meter)

---

e) Once the calculations above have been completed, the calculation results are compared to the applicable limits and corrective actions are initiated as described below.

7. Corrective actions

a) CHEMISTRY SECTION surveillance procedures shall contain/and/or reference administrative and/or Control limits for annual organ dose rates for gaseous effluents and shall specify corrective actions to be initiated when these limits are exceeded.

b) Refer to Control 3.11.2.1 for actions to be taken in the event the calculated annual organ dose rate to any organ exceeds 1500 mr/yr.

CUMULATIVE GAMMA AIR DOSES DUE TO NOBLE GASES IN GASEOUS EFFLUENTS

1. Introduction

a) Appendix I to 10 CFR 50 specifies cumulative gamma air dose limits associated with the release of radioactive materials to **UNRESTRICTED AREAS**.

b) Radiological effluent controls have been established to implement the requirements of 10 CFR 50, Appendix I.

c) These radiological effluent controls are described below.

2. Radiological Effluent Controls

   a) The cumulative gamma air dose, due to noble gases in gaseous effluents released to **UNRESTRICTED AREAS**, shall be less than 10 mrads in any calendar quarter, and shall be less than 20 mrads in any calendar year (per Control 3.11.2.2)

   b) The routine surveillances which are performed to verify compliance with these radiological effluent controls are described below.

3. Surveillance Requirement(s)

   a) The cumulative gamma air doses, for the current calendar month, the calendar quarter, and the current calendar year, due to noble gases in gaseous effluents, shall be determined at least once every 31 days (Control 4.11.2.2).

   b) The plant group(s) responsible for performing the required surveillance(s) are identified below.

4. Responsible Plant Organizations

   a) The CHEMISTRY SECTION is responsible for calculating the cumulative gamma air doses for the current calendar quarter and the current calendar year.

   b) The CHEMISTRY SECTION calculates the cumulative gamma air doses whenever the appropriate initiating conditions are present

   c) These initiating conditions are contained in the following section.

5. Initiating Conditions

   a) The cumulative gamma air doses due to noble gases in gaseous effluents shall be determined at least once per 31 days (Control 4.11.2.2).

   b) The cumulative gamma air doses due to noble gases in gaseous effluents shall be calculated for each release of a WGDT.

   c) The cumulative gamma air doses due to noble gases in gaseous effluents shall be calculated for each vent of a containment building.

   d) The cumulative gamma air doses due to noble gases in gaseous effluents shall be calculated for each **PURGE** of a containment building.

   e) The cumulative gamma air doses due to noble gases in gaseous effluents shall be calculated at least weekly[1] for CONTINUOUS discharges from plant vent stacks.

   f) The cumulative gamma air doses due to noble gases in gaseous effluents shall be calculated for each discharge of combustion products resulting from the burning of contaminated oil.

---

[1] The frequency is controlled by the implementing procedure, and is based on plant conditions. Under no conditions shall the frequency be less than once per month (Control 4.11.2.1.1 or 4.11.2.1.2, Table 4.11-2).

g) The cumulative gamma air doses due to noble gases in gaseous effluents shall be calculated for each **ABNORMAL AND/OR UNANTICIPATED RADIOACTIVE GAS RELEASE**[1].

h) Whenever the correct initiating conditions are present, the cumulative gamma air doses shall be calculated as described below.

6. Calculation Methodology

a) The cumulative gamma air dose at the **SITE BOUNDARY** (e.g., for the current calendar month, current calendar quarter, current calendar year, or previous 92 days) due to noble gases in gaseous effluents shall be calculated using the following equation[2]:

---

1 The criteria used to define ABNORMAL AND UNANTICIPATED GAS RELEASES may be found in the implementing procedures.

2 The alarm and fixed setpoints ... shall be determined and adjusted in accordance with the methodology and parameters of the ODCM. (Control 3.3.3.9).

CUMULATIVE GAMMA, g, AIR DOSE FOR ALL GASEOUS RELEASES, r, DISCHARGED DURING TIME INTERVAL, t

$$D_{gt} = \Sigma D_{gr} \qquad \text{Eq. 17G}$$

Where,

D_{gt} = the cumulative gamma air dose (mrad) at the **SITE BOUNDARY** due to noble gas radionuclides contained in all gaseous radwaste discharged from the site during the time interval, t

D_{gr} = the cumulative gamma air dose (mrad) at the **SITE BOUNDARY** due to noble gas radionuclides contained in gaseous radwaste release, r, discharged from the site during the time interval of interest

Calculate the values of D_{gr} for each gaseous release as described below.

---

b) At CCNPP, two methods exist for calculating D_{gr} (i.e., the gamma air dose at the **SITE BOUNDARY** due to noble gas radionuclides contained in a gaseous radwaste release, r, discharged from the site during a specified time interval).

(1) The rigorous method shall be used IF a computer system and the appropriate software are available.

(2) The simplified method may be used IF a computer system and the appropriate software are NOT available.

(3) These methods, as well as additional supporting information, are presented in the following sections.

c) rigorous method

(1) Solution of the following equation may prove too rigorous for routine use unless a computer system and appropriate software are available.

(2) If a computer system and the appropriate software are available, the gamma air dose due to noble gases in gaseous effluents released to **UNRESTRICTED AREAS** shall be calculated in accordance with equation 18G.

GAMMA AIR DOSE DUE TO NOBLE GASES IN GAS RELEASE, r (RIGOROUS EQUATION)

$$D_{gr} = (3.17E\text{-}8)(x/Q)\sum[(M_i)(Q'_{ir})] \qquad \text{Eq. 18G}^1$$

Where,

3.17E-8 = The conversion constant, 3.17E-8, represents the inverse of the number of seconds in a year.

x/Q = the highest calculated annual average relative concentration for any area at or beyond the **UNRESTRICTED AREA** boundary (2.2E-6 seconds per cubic meter)

All releases are considered "long-term" releases[2], and as such, the highest historical annual average dispersion factor, (x/Q), is used in the dose calculations.

The highest annual average dispersion factor (x/Q) is 2.2E-6 (UFSAR, 2.3.6.3) for purposes of routine, long-term concentrations (e.g., routine noble gas releases) (UFSAR, 2.3.6.3).

The maximum annual average on-shore concentrations occur in the southeast sector at a distance of 1300 meters for purposes of routine, long-term concentrations (e.g., routine noble gas releases) (UFSAR, 2.3.6.3).

M_i = the air dose factor due to gamma emissions for each identified noble gas radionuclide, i (mrad/yr per microcurie/cubic meter)

The gamma air dose factors have been obtained from Regulatory Guide 1.109, Appendix B, Table B-1.

The gamma air dose factors for various noble gas radionuclides are tabulated in Attachment 10.

Q'_{ir} = the total (time averaged) activity of noble gas radionuclide, i, in gaseous release, r (microcuries).

At CCNPP, all releases are considered long term releases.

Calculate the values of Q_{ir} for each release in accordance with equation 19G.

---

1 Equation 18G has been derived from NUREG-0133, 5.3.1..
2 NUREG-0133, 3.3

TOTAL (TIME AVERAGED) ACTIVITY OF NOBLE GAS NUCLIDE i IN GASEOUS RELEASE r

$$Q'_{ir} = (A_{ir})(F_r)(t_{ir})(c') \qquad \text{Eq. 19G}$$

A_{ir} = the specific activity of noble gas radionuclide, i, in release, r, discharged during the time interval of interest (microcuries/cubic centimeter)

F_r = the discharge flow rate for release, r, discharged during the time interval of interest (cubic meters per second)

If the discharge flow rate is unknown (e.g., the gaseous radwaste has not been released), the "Maximum Discharge Flow Rate" listed on Attachments 7 or 8 may be used to calculate the average activity for nuclide i.

Whenever possible, the actual discharge flow rate determined from actual release conditions (e.g., initial pressure, volume, and temperature of a WGDT along with final pressure and temperature) shall be used in equation 19G.

Additional guidance for calculating discharge flow rates may be contained in approved CHEMISTRY SECTION procedures.

t_{ir} = the duration of the gaseous radwaste release (seconds)

c' = a conversion constant, 1E6 cubic centimeters per cubic meter, which represents the number cubic centimeters per cubic meter.

---

(3) In the event a computer system is unavailable, a simplified equation may be used to calculate the gamma air dose due to noble gases in gaseous effluents released to UNRESTRICTED AREAS.

(4) The simplified method is presented below.

d) simplified method

(1) If a computer system and appropriate software are NOT available to perform the rigorous gamma air dose calculation described in the previous section, the gamma air dose, due to noble gas radionuclides, in any single release of waste gases discharged to UNRESTRICTED AREAS may be calculated in accordance with equation 20G.

GAMMA AIR DOSE DUE TO NOBLE GASES IN GAS RELEASE, r (SIMPLIFIED EQUATION)

$$D_{gr} = [(3.17E\text{-}8)(x/Q)(M_{avg})/K_{sf}]\sum Q'_{ir} \qquad \text{Eq. 20G}^{1}$$

3.17E-8 = The conversion constant, 3.17E-8, represents the inverse of the number of seconds in a year.

x/Q = the highest calculated annual average relative concentration for any area at or beyond the **UNRESTRICTED AREA** boundary (2.2E-6 seconds per cubic meter)

All releases are considered "long-term" releases[2], and as such, the highest historical annual average dispersion factor, (x/Q), is used in the dose calculations.

The highest annual average dispersion factor (x/Q) is 2.2E-6 (UFSAR, 2.3.6.3) for purposes of routine, long-term concentrations (e.g., routine noble gas releases) (UFSAR, 2.3.6.3).

The maximum annual average on-shore concentrations occur in the southeast sector at a distance of 1300 meters for purposes of routine, long-term concentrations (e.g., routine noble gas releases) (UFSAR, 2.3.6.3).

M_{avg} = the empirically derived, site specific, average gamma air dose factor for each identified noble gas radionuclide, i (mrad/yr per microcurie/cubic meter)

A site-specific, average, gamma air dose factor has been calculated from historical data.

The calculation of this site-specific, average, gamma air dose factor is presented on Attachment 11 (use section 3.4.5 of the old ODCM.)

K_{sf} = a constant, actually a safety factor, which is the ratio of the CCNPP gamma air dose limit to the gamma air dose limit of Control 3.11.2.2, (unitless)

The safety factor chosen shall be less than or equal to 1.00. This ensures the gamma air dose is always less than or equal to the gamma air dose limit of Control 3.11.2.2.

A safety factor of 1.00 will yield an gamma air dose which corresponds to the gamma air dose limit of Control 3.11.2.2.

A safety factor of 0.500 will yield an gamma air dose which corresponds to one-half the gamma air dose limit of Control 3.11.2.2.

It is recommended that a safety factor of 1.0 be used for calculating the gamma air dose, however, other values--not to exceed 1.00--may be used as directed by the General Supervisor Chemistry.

The particular value selected for the safety factor is somewhat arbitrary, however a safety factor does provide plant personnel with a degree of administrative control over the use of simplified equations for generating radioactive gaseous release permits. This administrative control is designed to minimize the possibility of violating Control 3.11.2.2 when simplifying assumptions are used.

---

1 Equation 20G has been derived from NUREG-0133, 5.3.1.
2 NUREG-0133, 3.3

The use of a safety factor is consistent with the ALARA philosophy that licensees should make every reasonable effort to maintain radiation exposures, and releases of radioactive materials in effluents to **UNRESTRICTED AREAS**, as low as is reasonably achievable.

This safety factor has been included in equation 20G to account for any potential nonconservatism associated with applying the empirically derived gamma air dose factor, M_{avg}, to all radionuclides identified in the gaseous release. Such nonconservatism could conceivable be present whenever radionuclides having a gamma air dose factor greater than M_{avg} are present in a gaseous release.

Q'_{ir} = the total (time averaged) activity of noble gas radionuclide, i, in gaseous release, r (microcuries)

At CCNPP, all releases are considered long term releases.

Calculate the values of Q_{ir} for each release in accordance with equation 19G.

TOTAL (TIME AVERAGED) ACTIVITY OF NOBLE GAS NUCLIDE i IN GASEOUS RELEASE r

$$Q'_{ir} = (A_{ir})(F_r)(t_{ir})(c') \qquad \text{Eq. 19G}$$

A_{ir} = the specific activity of noble gas radionuclide, i, in release, r, discharged during the time interval of interest (microcuries/cubic centimeter).

F_r = the discharge flow rate for release, r, discharged during the time interval of interest (cubic meters per second).

If the discharge flow rate is unknown (e.g., the gaseous radwaste has not been released), the "Maximum Discharge Flow Rate" listed on Attachments 7 or 8 may be used to calculate the average activity for nuclide i.

Additional guidance for calculating discharge flow rates may be contained in approved CHEMISTRY SECTION procedures.

t_{ir} = the duration of the gaseous radwaste release (seconds).

c' = a conversion constant, 1E6 cubic centimeters per cubic meter, which represents the number of cubic centimeters per cubic meter.

e) Once the calculations above have been completed, the calculation results are compared to the applicable limits and corrective actions are initiated as described below.

7. Corrective actions

a) CHEMISTRY SECTION surveillance procedures shall contain/and or reference administrative and/or Control limits for quarterly and yearly gamma air doses for gaseous effluents and shall specify corrective actions to be initiated when these limits are exceeded.

b) Refer to Control 3.11.2.2 for actions to be taken in the event the calculated cumulative gamma air doses exceed 10 mrads per calendar quarter or 20 mrads per calendar year.

CUMULATIVE BETA AIR DOSES DUE TO NOBLE GASES IN GASEOUS EFFLUENTS

1. Introduction

a) Appendix I to 10 CFR 50 specifies cumulative beta air dose limits associated with the release of radioactive materials to **UNRESTRICTED AREAS**.

b) Radiological effluent controls have been established to implement the requirements of 10 CFR 50, Appendix I.

c) These radiological effluent controls are described below.

2. Radiological Effluent Controls

a) The cumulative beta air dose, due to noble gases in gaseous effluents released to **UNRESTRICTED AREAS**, shall be less than 20 mrads in any calendar quarter, and shall be less than 40 mrads in any calendar year (per Control 3.11.2.2)

b) The routine surveillances which are performed to verify compliance with these radiological effluent controls are described below.

3. Surveillance Requirement(s)

a) The cumulative beta air doses, for the current calendar quarter and the current calendar year, due to noble gases in gaseous effluents, shall be determined at least once every 31 days (Control 4.11.2.2).

b) The plant group(s) responsible for performing the required surveillance(s) are identified below.

4. Responsible Plant Organizations

a) The CHEMISTRY SECTION is responsible for calculating the cumulative beta air doses for the current calendar quarter and the current calendar year.

b) The CHEMISTRY SECTION calculates the cumulative beta air doses whenever the appropriate initiating conditions are present

c) These initiating conditions are contained in the following section.

5. Initiating Conditions

a) The cumulative beta air doses due to noble gases in gaseous effluents shall be determined at least once per 31 days (Control 4.11.2.2).

b) The cumulative beta air doses due to noble gases in gaseous effluents are calculated for each release of a WGDT.

c) The cumulative beta air doses due to noble gases in gaseous effluents are calculated for each vent of a containment building.

d) The cumulative beta air doses due to noble gases in gaseous effluents are calculated for each PURGE of a containment building.

e) The cumulative beta air doses due to noble gases in gaseous effluents are calculated at least weekly[1] for CONTINUOUS discharges from plant vent stacks.

f) The cumulative beta air doses due to noble gases in gaseous effluents are calculated for each discharge of combustion products resulting from the burning of contaminated oil.

g) The cumulative beta air doses due to noble gases in gaseous effluents are calculated for each ABNORMAL AND/OR UNANTICIPATED RADIOACTIVE GAS RELEASE[2].

h) Whenever the correct initiating conditions are present, the cumulative beta air doses shall be calculated as described below.

6. Calculation Methodology

a) The cumulative beta air doses (e.g., for the current calendar month, current calendar quarter, current calendar year, or previous 92 days) due to noble gases in gaseous effluents shall be calculated in accordance with equation 21G.

---

1 The frequency is controlled by the implementing procedure, and is based on plant conditions. Under no conditions shall the frequency be less than once per month (Controls 4.11.2.1.1 or 4.11.2.1.2, Table 4.11-2).

2 The criteria used to define ABNORMAL AND UNANTICIPATED GAS RELEASES may be found in CP-612 or CP-604.

CUMULATIVE BETA AIR DOSE FOR ALL GASEOUS RELEASES, r, DISCHARGED DURING TIME INTERVAL, t

$$D_{\beta t} = \sum D_{\beta r} \qquad \text{Eq. 21G}$$

Where,

$D_{\beta t}$ = the cumulative beta air dose (mrad) at the **SITE BOUNDARY** due to noble gas radionuclides contained in all gaseous radwaste discharged from the site during the time interval, t

$D_{\beta r}$ = the beta air dose (mrad) due to noble gas radionuclides contained in gaseous radwaste release, r, discharged from the site during the time interval of interest

Calculate the values of $D_{\beta r}$ for each gaseous release as described below.

---

b) At CCNPP, two methods exist for calculating $D_{\beta r}$ (the beta air dose at the **SITE BOUNDARY** due to noble gas radionuclides contained in a gaseous radwaste release, r, discharged from the site).

(1) The rigorous method shall be used IF a computer system and the appropriate software are available.

(2) The simplified method may be used IF a computer system and the appropriate software are NOT available.

(3) These methods, as well as additional supporting information, are presented in the following sections.

c) Rigorous method

(1) Solution of the following equation may prove too rigorous for routine use unless a computer system and appropriate software are available.

(2) If a computer system and the appropriate software are available, the cumulative beta air dose due to noble gases in gaseous effluents released to **UNRESTRICTED AREAS** shall be calculated in accordance with equation 22G.

BETA AIR DOSE DUE TO NOBLE GASES IN GAS RELEASE, r (RIGOROUS EQUATION)

$$D_{\beta r} = (3.17E\text{-}8)(x/Q)\sum[(N_i)(Q'_{ir})] \qquad \text{Eq. 22G}^1$$

Where,

$D_{\beta r}$ = the beta air dose due to noble gas radionuclides contained in gaseous radwaste release, r, discharged from the site during the time interval of interest

3.17E-8 = The conversion constant, 3.17E-8, represents the inverse of the number of seconds in a year.

x/Q = the highest calculated annual average relative concentration for any area at or beyond the **UNRESTRICTED AREA** boundary (2.2E-6 seconds per cubic meter)

All releases are considered "long-term" releases[2], and as such, the highest historical annual average dispersion factor, (x/Q), is used in the dose calculations.

The highest annual average dispersion factor (x/Q) is 2.2E-6 (UFSAR, 2.3.6.3) for purposes of routine, long-term concentrations (e.g., routine noble gas releases) (UFSAR, 2.3.6.3).

The maximum annual average on-shore concentrations occur in the southeast sector at a distance of 1300 meters for purposes of routine, long-term concentrations (e.g., routine noble gas releases) (UFSAR, 2.3.6.3).

N_i = the air dose factor due to beta emissions for each identified noble gas radionuclide, i (mrad/yr per microcurie/cubic meter)

The beta air dose factors have been obtained from Regulatory Guide 1.109, Appendix B, Table B-1.

The beta air dose factors for various noble gas radionuclides are tabulated in Attachment 10 (Attachment 1 of old ODCM).

Q'_{ir} = the total (time averaged) activity of noble gas radionuclide, i, in gaseous release, r (microcuries).

At CCNPP, all releases are considered long term releases.

Calculate the values of Q_{ir} for each release in accordance with equation 19G.

---

1 Equation 22G has been derived from NUREG-0133, 5.3.1.
2 NUREG-0133, 3.3

TOTAL (TIME AVERAGED) ACTIVITY OF NOBLE GAS NUCLIDE i IN GASEOUS RELEASE r

$$Q'_{ir} = (A_{ir})(F_r)(t_{ir})(c') \qquad \text{Eq. 19G}$$

A_{ir} = the specific activity of noble gas radionuclide, i, in release, r, discharged during the time interval of interest (microcuries/cubic centimeter).

F_r = the discharge flow rate for release, r, discharged during the time interval of interest (cubic meters per second).

If the discharge flow rate is unknown (e.g., the gaseous radwaste has not been released), the "Maximum Discharge Flow Rate" listed on Attachments 7 or 8 may be used to calculate the average activity for nuclide i.

Additional guidance for calculating discharge flow rates may be contained in approved CHEMISTRY SECTION procedures.

t_{ir} = the duration of the gaseous radwaste release (seconds).

c' = a conversion constant, 1E6 cubic centimeters per cubic meter.

---

(3) In the event a computer system is unavailable, a simplified equation may be used to calculate the gamma air dose due to noble gases in gaseous effluents released to **UNRESTRICTED AREAS.**

(4) The simplified method is presented below.

d) Simplified method

(1) If a computer system and the appropriate software are NOT available to perform the rigorous beta air dose calculation described in the previous section, the beta air dose resulting from a single release of waste gases discharged to **UNRESTRICTED AREAS** may be calculated in accordance with equation 23G.

BETA AIR DOSE DUE TO NOBLE GASES IN GAS RELEASE, r (SIMPLIFIED EQUATION)

$$D_{\beta r} = [(3.17E\text{-}8)(x/Q)(N_{avg})/K_{sf}]\sum Q'_{ir} \qquad \text{Eq. 23G}^1$$

3.17E-8 = The conversion constant, 3.17E-8, represents the inverse of the number of seconds in a year.

x/Q = the highest calculated annual average relative concentration for any area at or beyond the **UNRESTRICTED AREA** boundary (2.2E-6 seconds per cubic meter)

All releases are considered "long-term" releases[2], and as such, the highest historical annual average dispersion factor, (x/Q), is used in the dose calculations.

The highest annual average dispersion factor (x/Q) is 2.2E-6 (UFSAR, 2.3.6.3) for purposes of routine, long-term concentrations (e.g., routine noble gas releases) (UFSAR, 2.3.6.3).

The maximum annual average on-shore concentrations occur in the southeast sector at a distance of 1300 meters for purposes of routine, long-term concentrations (e.g., routine noble gas releases) (UFSAR, 2.3.6.3).

N_{avg} = the empirically derived, site specific, average beta air dose factor for each identified noble gas radionuclide, i (mrad/yr per microcurie/cubic meter)

A site-specific, average, beta air dose factor has been calculated from historical data.

The calculation of this site-specific, average, beta air dose factor is presented on Attachment 11.

K_{sf} = a constant, actually a safety factor, which is the ratio of the CCNPP beta air dose limit to the beta air dose limit of Control 3.11.2.2, (unitless)

The safety factor chosen shall be less than or equal to 1.00. This ensures the beta air dose is always less than or equal to the beta air dose limit of Control 3.11.2.2.

A safety factor of 1.00 will yield an organ dose which corresponds to the beta air dose limit of Control 3.11.2.2.

A safety factor of 0.500 will yield an beta air dose which corresponds to one-half the beta air dose limit of Control 3.11.2.2.

It is recommended that a safety factor of 1.0 be used for calculating the beta air dose, however, other values--not to exceed 1.00--may be used as directed by the General Supervisor Chemistry.

---

1 Equation 23G has been derived from NUREG-0133, 5.3.1.
2 NUREG-0133, 3.3

The particular value selected for the safety factor is somewhat arbitrary, however a safety factor does provide plant personnel with a degree of administrative control over the use of simplified equations for generating radioactive gaseous release permits. This administrative control is designed to minimize the possibility of violating Control 3.11.2.2 when simplifying assumptions are used.

The use of a safety factor is consistent with the ALARA philosophy that licensees should make every reasonable effort to maintain radiation exposures, and releases of radioactive materials in effluents to **UNRESTRICTED AREAS**, as low as is reasonably achievable.

This safety factor has been included in equation 23G to account for any potential nonconservatism associated with applying the empirically derived beta air dose factor, N_{avg}, to all radionuclides identified in the gaseous release. Such nonconservatism could conceivable be present whenever radionuclides having a beta air dose factor greater than N_{avg} are present in a gaseous release.

Q'_{ir} = the total (time averaged) activity of noble gas radionuclide, i, in gaseous release, r (microcuries)

At CCNPP, all releases are considered long term releases.

Calculate the values of Q_{ir} for each release in accordance with equation 19G.

TOTAL (TIME AVERAGED) ACTIVITY OF NOBLE GAS NUCLIDE i IN GASEOUS RELEASE r

$$Q'_{ir} = (A_{ir})(F_r)(t_{ir})(c') \qquad \text{Eq. 3}$$

A_{ir} = the specific activity of noble gas radionuclide, i, in release, r, discharged during the time interval of interest (microcuries/cubic centimeter)

F_r = the discharge flow rate for release, r, discharged during the time interval of interest (cubic meters per second)

If the discharge flow rate is unknown (e.g., the gaseous radwaste has not been released), the "Maximum Discharge Flow Rate" listed on Attachments 7 or 8 may be used to calculate the average activity for nuclide i.

Additional guidance for calculating discharge flow rates may be contained in approved CHEMISTRY SECTION procedures.

t_{ir} = the duration of the gaseous radwaste release (seconds).

c' = a conversion constant, 1E6 cubic centimeters per cubic meter.

---

e) Once the calculations above have been completed, the calculation results are compared to the applicable limits and corrective actions are initiated as described below.

7. Corrective actions

a) CHEMISTRY SECTION surveillance procedures shall contain/and or reference administrative and/or Control limits for quarterly and yearly beta air doses for gaseous effluents and shall specify corrective actions to be initiated when these limits are exceeded.

b) Refer to Control 3.11.2.2 for actions to be taken in the event the calculated cumulative beta air doses exceed 20 mrads per calendar quarter or 40 mrads per calendar year.

CUMULATIVE ORGAN DOSES DUE TO IODINES AND PARTICULATES IN GASEOUS EFFLUENTS

1. Introduction

a) Appendix I to 10 CFR 50 specifies cumulative organ dose limits associated with the release of radioactive materials to **UNRESTRICTED AREAS**.

b) Radiological effluent controls have been established to implement the requirements of 10 CFR 50, Appendix I.

c) These radiological effluent controls are described below.

2. Radiological Effluent Controls

a) The cumulative organ dose due to iodines and particulates in gaseous effluents released to **UNRESTRICTED AREAS** shall be less than 15 mrems per calendar quarter, and shall be less than 30 mrems per calendar year (per Control 3.11.2.3).

b) The cumulative organ dose due to iodines and particulates in gaseous, contaminated oil combustion products released to **UNRESTRICTED AREAS** shall be less than 0.015 mrems per quarter, and shall be less than 0.030 mrems per year (per Control 3.11.2.3).

c) The routine surveillances which are performed to verify compliance with this radiological effluent controls are described below.

3. Surveillance Requirements

a) The cumulative organ doses (due to iodines and particulates in gaseous waste discharged to **UNRESTRICTED AREAS**), for the current calendar month, the current calendar quarter, and the current calendar year, shall be determined at least once every 31 days in accordance with the ODCM (per Control 4.11.2.3).

b) The plant group(s) responsible for performing the required surveillances are identified below.

4. Responsible Plant Organizations

   a) The CHEMISTRY SECTION is responsible for implementing the surveillances required by Control 4.11.2.3.

   b) The CCNPP CHEMISTRY SECTION calculates the cumulative organ doses whenever the appropriate initiating conditions are present

   c) These initiating conditions are contained in the following section.

5. Initiating Conditions

   a) The cumulative organ dose--for each organ--shall be determined at least once per 31 days (Control 4.11.2.2).

   b) The cumulative organ dose--for each organ--due to iodines and particulates in gaseous effluents shall be calculated at least weekly[1] for CONTINUOUS discharges from plant vent stacks.

   c) The cumulative organ dose--for each organ--due to iodines and particulates in gaseous effluents shall be calculated for each discharge of combustion products resulting from the burning of contaminated oil.

   d) The cumulative organ dose--for each organ--due to iodines and particulates in gaseous effluents shall be calculated for each **ABNORMAL AND/OR UNANTICIPATED RADIOACTIVE GAS RELEASE.**

   e) Whenever the correct initiating conditions are present, the annual cumulative organ doses shall be calculated as described below.

6. Calculation Methodology

   a) The cumulative organ doses (for the calendar month, calendar quarter, previous 92 days, and calendar year) due to iodines and particulates in gaseous waste discharged to **UNRESTRICTED AREAS** shall be calculated in accordance with equation 24G.

---

[1] The frequency is controlled by the implementing procedure, and is based on plant conditions. Under no conditions shall the frequency be less than once per month (Controls 4.11.2.1.1 or 4.11.2.1.2, Table 4.11-2).

CUMULATIVE DOSE TO ORGAN, o, FROM ALL GASEOUS RELEASES, r, DISCHARGED DURING TIME INTERVAL, t

$$D_{ot} = \Sigma D_{or} \qquad \text{Eq. 24G}$$

Where,

D_{ot} = the cumulative dose (mrad) to organ, o, at the **SITE BOUNDARY**, due to iodine and particulate radionuclides contained in gaseous waste discharged from the site during the time interval, t

D_{or} = the dose (mrad) to organ, o, at the **SITE BOUNDARY** due to iodine and particulate radionuclides in gaseous release, r, discharged from the site during the time interval of interest

Calculate the values of D_{or} for each gaseous release as described below.

---

b) At CCNPP, two methods exist for calculating D_{or} (the organ doses due to iodines and particulates resulting from any single release of radioactive gases to an **UNRESTRICTED AREA**).

(1) The rigorous method shall be used IF a computer system and the appropriate software are available.

(2) The simplified method may be used IF a computer system and the appropriate software are NOT available.

(3) These methods, as well as additional supporting information, are presented in the following sections.

c) Rigorous method

(1) Application of the following equation may prove too rigorous for routine use unless a computer system and the appropriate software are available.

(2) If a computer system and the appropriate software are available, the organ doses due to iodines and particulates contained in any single release of radioactive gases to **UNRESTRICTED AREAS** shall be calculated in accordance with equation 25G.

DOSE TO ORGAN, o, DUE TO IODINES AND PARTICULATES IN GAS RELEASE, r (RIGOROUS EQUATION)

$$D_{or} = (3.17E\text{-}8)(W_v)\sum(R_{ipao})(Q'_{ir}) \qquad \text{Eq. 25G}^{1}$$

Where,

D_{or} = the dose (mrem) to organ, o, at the **SITE BOUNDARY** due to iodine and particulate radionuclides in gaseous release, r, discharged from the site during the time interval of interest

3.17E-8 = The conversion constant, 3.17E-8, represents the inverse of the number of seconds in a year.

W_v = the dispersion parameter for estimating the dose to an individual at the controlling location for long term releases, and may assume one of two values as described below

W_v is x/Q for the inhalation pathway (2.2E-6 sec/cubic meter)

W_v is D/Q for the food and ground plane pathways (meters^{-2})

D/Q = the dispersion parameter at the controlling location for long term releases (meters^{-2})

The value for D/Q has been determined to be 8.63E-10 m^{-2}.[2]

The grass-cow-milk pathway is the controlling pathway.[3]

The controlling sector is the south-southwest sector.

The controlling location is at a distance of 4800 meters.[3]

R_{ipao} = the dose factor for each identified iodine or particulate radionuclide, i, exposure pathway, p, receptor age group, a, and organ, o (m^2 mrem/year per microcuries/second or mrem/year per microcuries/cubic meter)

dose factors have been derived for the following pathways

1) inhalation - see Attachment 12
2) ground plane - see Attachment 12
3) grass-cow-milk - see Attachment 12
4) grass-cow-meat - see Attachment 12
5) vegetation - see Attachment 12

The inhalation pathway dose factors were obtained using the formula from NUREG-0133, 5.3.1.1.

The ground plane dose factors were obtained using the formula from NUREG-0133, 5.3.1.2.

---

1 Equation 25G has been derived from NUREG-0133, 5.3.1.
2 See CP-607, Revision 2 section 3.4.3.
3 See the "Land Use Survey", 1990.

The grass-cow-milk pathway dose factors were obtained using the formula from NUREG-0133, 5.3.1.3.

The grass-cow-meat pathway dose factors were obtained using the formula from NUREG-0133, 5.3.1.4.

The vegetation pathway dose factors were obtained using the formula from NUREG-0133, 5.3.1.5.

Q'_{ir} = the total (time averaged) activity of iodine or particulate radionuclide, i, in gaseous release, r, discharged during the specified time interval (microcuries)

At CCNPP, all releases are considered long term releases.

Calculate the values of Q_{ir} for each release in accordance with equation 19G.

TOTAL (TIME AVERAGED) ACTIVITY OF IODINE OR PARTICULATE NUCLIDE i IN GASEOUS RELEASE r

$$Q'_{ir} = (A_{ir})(F_r)(t_{ir})(c') \qquad \text{Eq. 19G}$$

A_{ir} = the specific activity of iodine and particulate radionuclide, i, in release, r, discharged during the time interval of interest (microcuries/cubic centimeter)

F_r = the discharge flow rate for release, r, discharged during the time interval of interest (cubic meters per second)

If the discharge flow rate is unknown (e.g., the gaseous radwaste has not been released), the "Maximum Discharge Flow Rate" listed on Attachments 7 or 8 may be used to calculate the average activity for nuclide i.

Additional guidance for calculating discharge flow rates may be contained in approved CHEMISTRY SECTION procedures.

t_{ir} = the duration of the gaseous radwaste release (seconds)

c' = a conversion constant, 1E6 cubic centimeters per cubic meter

---

(3) In the event a computer system and the appropriate software are unavailable, a simplified equation may be used to calculate the organ doses due to individual gaseous releases.

(4) The simplified method is presented below.

d) simplified method

(1) If a computer system and appropriate software are NOT available to perform the rigorous organ dose calculations described in the previous section, the organ doses due to iodines and particulates in a single release of radioactive gases discharged to an **UNRESTRICTED AREA** may be calculated in accordance with equation 26G.

DOSE TO ORGAN, o, FROM IODINES AND PARTICULATES IN GAS RELEASE, r (SIMPLIFIED EQUATION)

$$D_{maxor} = [(3.17E\text{-}8)(W_v)(R_{I\text{-}131})/K_{sf}]\Sigma(Q'_{ir}) \qquad \text{Eq. 26G}^1$$

D_{maxor} = the maximum dose to any organ, o, due to iodines and particulates contained in any single release, r, of radioactive gases to an **UNRESTRICTED AREA**

3.17E-8 = The conversion constant, 3.17E-8, represents the inverse of the number of seconds in a year.

D/Q = the dispersion parameter at the controlling location for long term releases (meters^{-2})

The value for D/Q has been determined to be 8.63E-10 m^{-2}.[2]

The grass-cow-milk pathway is the controlling pathway.[3]

The controlling sector is the south-southwest sector.

The controlling location is at a distance of 4800 meters.[3]

$R_{I\text{-}131}$ = the infant, thyroid, dose factor for I-131 via the grass-cow-milk pathway (m^2 mrem/year per microcuries/second)

This value is 1.05E12 and it is listed on Attachment 12.

K_{sf} = a constant, actually a safety factor, which is the ratio of the CCNPP organ dose limit to the organ dose limit of Control 3.11.2.3, (unitless)

The safety factor chosen shall be less than or equal to 1.00. This ensures the organ dose is always less than or equal to the organ dose limit of Control 3.11.2.3.

A safety factor of 1.00 will yield an organ dose which corresponds to the organ dose limit of Control 3.11.2.3.

A safety factor of 0.500 will yield an organ dose which corresponds to one-half the organ dose limit of Control 3.11.2.3.

It is recommended that a safety factor of 1.0 be used for calculating the organ dose, however, other values--not to exceed 1.00--may be used as directed by the General Supervisor Chemistry.

The particular value selected for the safety factor is somewhat arbitrary, however a safety factor does provide plant personnel with a degree of administrative control over the use of simplified equations for generating radioactive gaseous release permits. This administrative control is designed to minimize the possibility of violating Control 3.11.2.3 when simplifying assumptions are used.

---

1 Equation 26G has been derived from NUREG-0133, 5.3.1.
2 See CP-607, Revision 2 section 3.4.3.
3 See the "Land Use Survey", 1990.

The use of a safety factor is consistent with the ALARA philosophy that licensees should make every reasonable effort to maintain radiation exposures, and releases of radioactive materials in effluents to **UNRESTRICTED AREAS**, as low as is reasonably achievable.

This safety factor has been included in equation 26G to account for any potential nonconservatism associated with applying the infant, thyroid, grass-cow-milk dose factor, R_{I-131}, to all radionuclides identified in the gaseous release. Such nonconservatism could conceivable be present whenever radionuclides having a pathway dose factor greater than R_{I-131} are present in a gaseous release.

Q'_{ir} = the total (time averaged) activity of iodine or particulate radionuclide, i, in gaseous release, r (microcuries)

At CCNPP, all releases are considered long term releases.

This value shall be calculated in accordance with equation 19G.

TOTAL (TIME AVERAGED) ACTIVITY OF IODINE OR PARTICULATE NUCLIDE i IN GASEOUS RELEASE r

$$Q'_{Ir} = (A_{Ir})(F_r)(t_{Ir})(c') \qquad \text{Eq. 19G}$$

A_{ir} = the specific activity of iodine and particulate radionuclide, i, in release, r, discharged during the time interval of interest (microcuries/cubic centimeter)

F_r = the discharge flow rate for release, r, discharged during the time interval of interest (cubic meters per second)

If the discharge flow rate is unknown (e.g., the gaseous radwaste has not been released), the "Maximum Discharge Flow Rate" listed on Attachments 7 or 8 may be used to calculate the average activity for nuclide i.

Additional guidance for calculating discharge flow rates may be contained in approved CHEMISTRY SECTION procedures.

t_{Ir} = the duration of the gaseous radwaste release (seconds)

c' = a conversion constant, 1E6 cubic centimeters per cubic meter

e) Once the calculations above have been completed, the calculation results are compared to the applicable limits and corrective actions are initiated as described below.

7. Corrective actions

a) CHEMISTRY SECTION surveillance procedures shall contain/and or reference administrative and/or Control limits for cumulative organ dose for gaseous effluents and shall specify corrective actions to be initiated when these limits are exceeded.

b) Refer to Control 3.11.2.3 for actions to be taken in the event the calculated cumulative gamma air doses exceed any of the radiological effluent controls listed above.

LIMITS FOR THE GASEOUS RADWASTE PROCESSING SYSTEM

1. Introduction

   a) 10 CFR 50.36a requires licensees to maintain and use the equipment installed in the gaseous waste processing system for the purpose of controlling effluents to the environment.

   b) Radiological effluent controls have been established to implement the requirements of 10 CFR 50.36a.

   c) These radiological effluent controls are described below.

2. Radiological effluent controls

   a) The **GASEOUS RADWASTE PROCESSING SYSTEM** and the **VENTILATION EXHAUST PROCESSING SYSTEM** shall be used to reduce radioactive materials in gaseous waste prior to their discharge when the gaseous effluent air dose, to areas at and beyond the **SITE BOUNDARY**, exceeds 1.20 mrads gamma radiation in a 92 day period (per Control 3.11.2.4).

   b) The **GASEOUS RADWASTE PROCESSING SYSTEM** and the **VENTILATION EXHAUST PROCESSING SYSTEM** shall be used to reduce radioactive materials in gaseous waste prior to their discharge when the gaseous effluent air dose, to areas at and beyond the **SITE BOUNDARY**, exceeds 2.4 mrads beta radiation in a 92 d period (per Control 3.11.2.4).

   c) The **VENTILATION EXHAUST PROCESSING SYSTEM** shall be used to reduce the quantity of radioactive materials in gaseous waste prior to their discharge when the calculated doses due to gaseous effluent releases, to areas at and beyond the **SITE BOUNDARY** exceeds 1.80 mrem to any organ in a 92 day period (per Control 3.11.2.4).

   d) The routine surveillances which are performed to verify compliance with this radiological effluent controls are described below.

3. Surveillance Requirement(s)

   a) The cumulative gamma air dose, for the previous 92 days, due to noble gases in gaseous effluents, shall be determined at least once every 31 days (Control 4.11.2.2).

   b) The plant group(s) responsible for performing the required surveillance(s) are identified below.

4. Responsible Plant Organizations

   a) The CHEMISTRY SECTION is responsible for calculating the cumulative gamma air doses for the current calendar month, the previous 92 days, the current calendar quarter, and the current calendar year.

b) The cumulative gamma air dose for the previous 92 days is calculated whenever the appropriate initiating conditions are present

c) These initiating conditions are contained in the following section.

5. Initiating conditions

a) For a listing of initiating conditions associated with calculating gamma air doses, see "Initiating Conditions" in the section of the ODCM titled, "Cumulative Gamma Air Doses Due To Noble Gases In Gaseous Effluents."

b) For a listing of initiating conditions associated with calculating beta air doses, see "Initiating Conditions" in the section of the ODCM titled, "Cumulative Beta Air Doses Due To Noble Gases In Gaseous Effluents."

c) For a listing of initiating conditions associated with calculating cumulative organ doses, see "Initiating Conditions" in the section of the ODCM titled, "Cumulative Organ Doses Due To Iodines And Particulates In Gaseous Effluents."

6. Calculation methodology

a) Calculate the previous 92-day cumulative gamma air dose as described in the section "Cumulative Gamma Air Doses Due To Noble Gases In Gaseous Effluents."

b) Calculate the previous 92-day cumulative beta air dose as described in the section "Cumulative Beta Air Doses Due To Noble Gases In Gaseous Effluents."

c) Calculate the previous 92-day cumulative organ dose as described in the section "Cumulative Organ Doses Due To Iodines And Particulates In Gaseous Effluents."

7. Corrective actions

a) CHEMISTRY SECTION surveillance procedures shall contain/and or reference administrative and/or Control limits for 92-day cumulative gamma, beta, or organ doses for gaseous effluents and shall specify corrective actions to be initiated when these limits are exceeded.

b) Refer to Control 3.11.2.4 for actions to be taken in the event the calculated 92-day cumulative gamma air, beta air, or organ doses exceed any of the radiological effluent controls listed above.

LIMITS ON TOTAL ANNUAL DOSE -- GASES, LIQUIDS, AND URANIUM FUEL CYCLE SOURCES

1. Introduction

   a) 40 CFR 190 specifies annual dose limits for radionuclides released to the environment.

   b) Radiological effluent controls have been established to implement the requirements of 40 CFR 190.

   c) These radiological effluent controls are described below.

2. Radiological effluent controls

   a) The total body dose from exposure to the combination of liquid releases, gas releases, and uranium fuel cycle sources shall be less than 25 mrem for the current calendar year (per Control 3.11.4).

   b) The organ dose (for the maximum exposed organ, not including the thyroid) from exposure to the combination of liquid releases, gas releases, and uranium fuel cycle sources shall be less than 25 mrem for the current calendar year (per Control 3.11.4).

   c) The thyroid dose from exposure to the combination of liquid releases, gas releases, and uranium fuel cycle sources shall be less than 75 mrem for the current calendar year (per Control 3.11.4).

   d) The routine surveillances which are performed to verify compliance with these radiological effluent controls are described below.

3. Surveillance Requirements

   a) The cumulative gamma air doses, for current calendar month, the current calendar quarter, and the current calendar year, due to noble gases in gaseous effluents, shall be determined at least once every 31 days (Control 4.11.2.2).

   b) The cumulative organ doses (due to iodines and particulates in gaseous waste discharged to **UNRESTRICTED AREAS**), for the current calendar month, the current calendar quarter, and the current calendar year, shall be determined at least once every 31 days in accordance with the ODCM (per Control 4.11.2.3).

   c) Cumulative total body dose to **MEMBERS OF THE PUBLIC** in **UNRESTRICTED AREAS**--for the current calendar month, the calendar quarter, and the current calendar year--shall be calculated at least once per 31 days (per Control 4.11.1.2).

   d) Cumulative organ doses to **MEMBERS OF THE PUBLIC** in **UNRESTRICTED AREAS**--for the current calendar month, the current calendar quarter, and the current calendar year--shall be calculated at least once per 31 days (per Control 4.11.1.2).

   e) The direct radiation dose to **MEMBERS OF THE PUBLIC** exposed to uranium fuel cycle sources (i.e., reactor units and outside storage tanks) shall be determined IF THE APPROPRIATE INITIATING CONDITIONS ARE PRESENT.

4. Responsible Plant Organization(s)

a) The CHEMISTRY SECTION is responsible for implementing the effluent surveillances required by Control 4.11.4.1.

b) The CHEMISTRY SECTION is responsible for ensuring implementation of the direct radiation surveillances required by Control 4.11.4.2.

c) IT SHOULD BE NOTED THAT NO SURVEILLANCES NEED BE PERFORMED UNLESS THE APPROPRIATE INITIATING CONDITIONS ARE PRESENT.

d) These initiating conditions are contained in the following section.

5. Initiating conditions

a) The total dose from liquid releases, gas releases, and uranium fuel cycle sources shall be determined whenever the calculated doses from **liquid effluents** exceed any of the following (per Control 4.11.4.2):

(1) Six (6) mrem per quarter to the total body

(2) Twelve (12) mrem per calendar year to the total body

(3) Twenty (20) mrem per quarter to any organ

(4) Forty (40) mrem per calendar year to any organ

b) The total dose from liquid releases, gas releases, and uranium fuel cycle sources shall be determined whenever the calculated air doses from noble gasses in **gaseous effluents** exceed any of the following (per Control 4.11.4.2):

(1) Twenty (20) mrad gamma per quarter

(2) Forty (40) mrad gamma per calendar year

(3) Forty (40) mrad beta per quarter

(4) Eighty (80) mrad beta per calendar year

c) The total dose from liquid releases, gas releases, and uranium fuel cycle sources shall be determined whenever the calculated organ doses from iodines and particulates in **gaseous effluents** exceed any of the following (per Control 4.11.4.2):

(1) Thirty (30) mrem per quarter to any organ

(2) Sixty (60) mrem per calendar year to any organ

d) Whenever the correct initiating conditions are present, the total doses from liquid releases, gas releases, and uranium fuel cycle sources (for the calendar year) shall be calculated as shown below.

6. Calculation methodology

a) The total body dose and the organ doses from liquid releases, gas releases, and uranium fuel cycle sources (for the calendar year) shall be calculated in accordance with equation 1T and 2T respectively.

TOTAL, TOTAL BODY DOSE FROM LIQUID RELEASES, GAS RELEASES, AND URANIUM FUEL CYCLE SOURCES

$$D_{tball} = D_{ToL} + D_{gt} + D_{tank} \quad \text{Eq. 1T}$$

TOTAL ORGAN DOSES FROM LIQUID RELEASES, GAS RELEASES, AND URANIUM FUEL CYCLE SOURCES

$$D_{oall} = D_{ToL} + D_{ot} + D_{tank} \quad \text{Eq. 2T}$$

D_{tball} = the dose (mrem) to total body resulting from the combination of all gas releases, all liquid releases, and all uranium fuel cycle sources.

D_{oall} = the dose (mrem) to organ, o, resulting from the combination of all gas releases, all liquid releases, and all uranium fuel cycle sources.

Separate values shall be calculated for each of the organs listed below:

1. bone
2. liver
3. thyroid
4. kidney
5. lung
6. GI tract

D_{ToL} = the cumulative dose (mrem) to organ, o, for all liquid releases discharged in a given time interval

Calculate this value as specified by equation 8L.

D_{gt} = the site-boundary cumulative gamma air dose (mrad) due to noble gas radionuclides contained in all gaseous radwaste discharged from the site during the time interval, t

Calculate this value as specified by equation 17G, except substitute K_i for M_i (see Attachment 10).

D_{ot} = the site-boundary cumulative organ dose (mrem) resulting from the release of iodine and particulate radionuclides in gaseous releases from the site

Calculate this value as specified by equation 24G.

D_{tank} = the calendar-year cumulative dose (mrem) to the maximum exposed MEMBER OF THE PUBLIC due to direct radiation from the reactor units and outside storage tanks

This value shall be based on the results of direct radiation measurements from TLDs or continuous dose rate instruments placed near the **SITE BOUNDARY** (e.g., from radiological environmental monitoring sites DR1-DR9 described on Attachment 13 and shown on Attachment 18).

The CHEMISTRY SECTION, and the Radiation Safety Section are responsible for determining this value.

b) Compare the calculated values to the radiological effluent controls (listed in this section), and if any of the radiological effluent controls have been exceeded, perform the appropriate corrective actions listed below.

7. Corrective actions

a) CHEMISTRY SECTION surveillance procedures shall contain/and or reference administrative and/or Control limits for total dose for liquid releases, gaseous releases, and uranium fuel cycle sources and shall specify corrective actions to be initiated when these limits are exceeded.

b) Refer to Control 3.11.4 for actions to be taken in the event the total dose exceeds any of the radiological effluent controls listed above.

c) If any of the radiological effluent controls have been exceeded, refer to 40 CFR 302, Appendix B, and verify the quantities of radioactive materials released are less than the values specified. **[375B]**

SPECIAL EXCEPTIONS AND ASSUMPTIONS FOR CALCULATION OF DOSES AND DOSE RATES

1. Camp Conoy

   a) Location

      (1) Camp Conoy is located within the **SITE BOUNDARY.**

      (2) Camp Conoy is located in the SE sector.

      (3) Camp Conoy is approximately 3000 feet from the plant.

   b) Occupancy

      (1) Camp Conoy is frequently visited by **MEMBERS OF THE PUBLIC.**

      (2) Maximum occupancy for **MEMBERS OF THE PUBLIC** at Camp Conoy is restricted to approximately 3380 hours per year.

   c) Meteorology

      (1) The highest historical annual average x/Q for Camp Conoy is 2.40E-6 seconds per cubic meter.[1]

   d) Dose calculation assumptions

      (1) Based on sections (b) and (c) above, any actual exposure to a MEMBER OF THE PUBLIC at Camp Conoy will be less than the calculated exposure for a MEMBER OF THE PUBLIC at the **SITE BOUNDARY.**[1]

      (2) No special considerations are required for addressing potential exposure at Camp Conoy.

2. Visitor's Center

   a) Location

      (1) The Visitor's Center is located within the **SITE BOUNDARY.**

      (2) The Visitor's Center is located in the WNW sector.

      (3) The Visitor's Center is approximately 1000 feet from the plant.

   b) Occupancy

      (1) The Visitor's Center is frequently visited by **MEMBERS OF THE PUBLIC.**

      (2) Maximum occupancy for **MEMBERS OF THE PUBLIC** at The Visitor's Center is restricted to daylight hours.

---

[1] See CP-607, Revision 2 page 24.

c) Meteorology

(1) The highest historical annual average x/Q for the Visitor's Center is 8.68E-6 seconds per cubic meter.[1]

(2) The wind frequency for the WNW sector, based on 1983 meteorological data, is four percent (4%).[1]

d) Dose calculation assumptions

(1) "Using a conservative basis of 10% wind frequency, and individual visiting the center for 330 hours/year during the periods of worst case meteorological conditions would be most highly exposed."[1]

(2) The dose calculated for the controlling **SITE BOUNDARY** is more conservative by a factor of 7.[1]

(3) Based on sections (b) and (c) above, any actual exposure to a MEMBER OF THE PUBLIC at The Visitor's Center will be less than the calculated exposure for a MEMBER OF THE PUBLIC at the **SITE BOUNDARY**.

(4) No special considerations are required for addressing potential exposure at The Visitor's Center.

---

1 See CP-607, Revision 2 page 24.

RADIOLOGICAL ENVIRONMENTAL MONITORING PROGRAM[1]

1. Introduction

   a) 10 CFR 50, Appendix I, Section IV.B.2 requires licensees to establish an environmental surveillance and monitoring program for the purpose of evaluating the relationship between quantities of radioactive material released in effluents and resultant radiation doses to individuals.

   b) Radiological environmental controls have been established to implement the requirements of 10 CFR 50, Appendix I, Section IV.B.2.

   c) These radiological environmental controls are described below.

2. Controls on the Radiological Environmental Monitoring Program (REMP)

   a) The REMP shall consist of environmental sample locations, analysis parameters, analysis frequencies, detection limits, and **ACTION** levels all of which conform to the requirements of Control 3.12.1. (See Attachment 13, 14, 15, 16, and 17).

   b) The REMP shall maintain a map showing sample locations near the **SITE BOUNDARY** in accordance with Control 3.12.1. (See Attachment 18).

   c) The REMP shall maintain a map showing sample locations within a 8 km. radius of the plant in accordance with Technical Specification 5.6.2. (See Attachment 19).

3. Surveillance Requirements

   a) Surveillances for direct radiation

      (1) Direct radiation dosimetry shall be collected from locations DR1-DR23 listed on Attachment 13.

      (2) In the event any of the monitoring stations, DR1-DR23, described on Attachment 13 become unavailable, establish new monitoring stations (with new dosimetry) as described below:

         (a) In lieu of any location DR1-DR9 described on Attachment 13, establish a new monitoring station in the same meteorological sector in the general area of the **SITE BOUNDARY**.

         (b) In lieu of any location DR10-DR18 described on Attachment 13, establish a new monitoring station in the same meteorological sector in the 6-8 km range from the site.

---

[1] This portion of the environmental monitoring program is designed to monitor the environment surrounding the CCNPP. A separate environmental monitoring program designed to monitor the environment surrounding Independent Spent Fuel Storage Installation is described elsewhere in the ODCM.

(c) In lieu of any location DR19-DR23 described on Attachment 13, establish a new monitoring station in either a special interest area (e.g., population center, nearby residence, school) or a control station whichever is applicable.

(3) In the event any dosimetry at an existing monitoring location DR1-DR23 becomes unavailable, place new dosimetry at the monitoring station.

(4) Analyze the dosimeters at the frequencies and for the parameters identified on Attachment 14.

(5) The sampling locations(s), excluding the control station location, having the lowest calculated dose or dose commitment(s), via the same exposure pathway, may be deleted from the RADIOLOGICAL ENVIRONMENTAL MONITORING PROGRAM after October 31 of the year in which the land use census was conducted in accordance with Control 3.12.2.b.

b) Surveillances for airborne activity

(1) Radioiodine and particulate samples shall be collected from locations A1-A5 listed on Attachment 13.

(2) In the event any of the monitoring stations, A1-A5, described on Attachment 13 become unavailable, establish new monitoring station(s) (fitted with new radioiodine and particulate samplers) as described below:

(a) In lieu of any location A1-A3 described on Attachment 13, establish a new monitoring station in the general area of the **SITE BOUNDARY**, such that the three monitoring stations are located in the meteorological sectors with the three highest calculated annual average ground level D/Q.

(b) In lieu location A4 described on Attachment 13, establish a new monitoring station near a community having the highest calculated annual average ground level D/Q.

(c) In lieu of location A5 described on Attachment 13 establish a new "control" location 15 to 30 kilometers from the plant in the least prevalent wind direction.

(3) In the event any radioiodine cartridge or particulate filter becomes unavailable from an existing monitoring location A1-A5 described on Attachment 13, place new radioiodine cartridge or particulate filter in the air sampler at the monitoring station.

(4) Analyze the samples at the frequencies and for the parameters identified on Attachment 15.

(5) The sampling locations(s), excluding the control station location, having the lowest calculated dose or dose commitment(s), via the same exposure pathway, may be deleted from the RADIOLOGICAL ENVIRONMENTAL MONITORING PROGRAM after October 31 of the year in which the land use census was conducted in accordance with Control 3.12.2.b.

c) Surveillances of waterborne activity

(1) Water and sediment samples shall be collected from the locations Wa1, Wa2, and Wb1 listed on Attachment 13.

(2) In the event any of the samples at Wa1, Wa2, or Wb1 are unavailable, collect substitute samples as described below:

(a) In lieu of a liquid sample at Wa1, collect a substitute sample of surface water from the intake area.

(b) In lieu of a liquid sample at Wa2, collect a substitute sample of surface water from the discharge area.

(c) In lieu of sample at Wb1, collect a substitute sample of sediment from a downstream shoreline with existing or potential recreational value.

(3) Analyze the samples at the frequencies and for the parameters identified on Attachment 16.

(4) The sampling locations(s), excluding the control station location, having the lowest calculated dose or dose commitment(s), via the same exposure pathway, may be deleted from the RADIOLOGICAL ENVIRONMENTAL MONITORING PROGRAM after October 31 of the year in which the land use census was conducted in accordance with Control 3.12.2.b.

d) Surveillances for ingestible activity

(1) Fish/invertebrate, milk, and food product samples shall be collected from the locations Ia1 thru Ia6 and Ib1 thru Ib9 listed on Attachment 13.

(2) In the event any of the samples at Ia1 thru Ia6 or Ib1 thru Ib9 are unavailable, collect substitute samples as described below:

(a) In lieu of samples at Ia1 thru Ia3, collect substitute three commercially and/or recreationally important species (two fish species and one invertebrate species) from the vicinity of the plant discharge area.

(b) In lieu of samples at Ia4 thru Ia6, collect three commercially and/or recreationally important species (two fish species and one invertebrate species) from an area not influenced by plant discharges.

(c) In lieu of samples at Ib1 thru Ib6, collect three kinds of broad leaf vegetation grown near the **SITE BOUNDARY** at two different locations of highest average ground level D/Q[1].

(d) In lieu of samples at Ib7 thru Ib9, collect one sample each of the similar broad leaf vegetation grown 15-30 km distant in the least prevalent wind direction.

(3) Analyze the samples at the frequencies and for the parameters identified on Attachment 17.

(4) The sampling locations(s), excluding the control station location, having the lowest calculated dose or dose commitment(s), via the same exposure pathway, may be deleted from the Radiological Environmental Monitoring Program after October 31 of the year in which the land use census was conducted in accordance with Control 3.12.2.b.

4. Responsible Company Organizations

a) The CHEMISTRY SECTION, CCNPPI is responsible for ensuring performance of the surveillances listed above.

5. Initiating conditions

a) Collect samples in accordance with the frequencies specified on Attachments 14, 15, 16, and 17.

b) Analyze samples in accordance with the frequencies specified on Attachments 15, 16, and 17.

c) Calculate the potential annual doses in accordance with the methodology outlined below if any of the following conditions are true:

(1) any of the above surveillance results reveal levels of environmental activity greater than the **ACTION** Levels specified on Attachments 15, 16, 17 (per Control Table 3.12-2)

(2) any radionuclides other than those in Attachments 15, 16, and 17 are detected, and the radionuclides are the result of plant effluents.

d) The REMP Manager is responsible for notifying the General Supervisor--Chemistry, CCNPP, if any of the following conditions are true:

---

1 With fresh leafy vegetable samples unavailable from one or more of the sample locations listed on Attachment 13, perform corrective actions specified by Control 3.12.1.c.

(1) any of the above surveillance results reveal levels of environmental activity greater than the **ACTION** Levels specified on Attachments 15, 16 17 (per Control Table 3.12-2)

(2) any radionuclides other than those in Attachments 15, 16, and 17 are detected, and the radionuclides are the result of plant effluents, and the potential annual doses due to the radionuclides are greater than the calendar year limits of Controls 3.11.1.2, 3.11.2.2, and 3.11.2.3.

6. Calculation methodology

a) If the correct initiating conditions, as described above, are present, calculate potential annual doses for the pathway of interest in accordance with the methodologies contained in ODCM, or

b) if methodologies other than those listed in the ODCM are used to calculate potential annual doses, such methodologies shall be documented in the AREOR in accordance with Control 3.12.1.b.

7. Corrective **ACTIONS**

a) If a sample is unobtainable due to sampling equipment malfunction, then attempt to restore equipment to operable status before the end of the next sampling period, and document in the AREOR (per Control 4.12.1, Table 3.12-1, notation "a").

b) If the RADIOLOGICAL ENVIRONMENTAL MONITORING PROGRAM is not being conducted in accordance with Attachments 13, 14, 15, 16, or 17 document deviations in the AREOR (per Control 3.12.1.a).

c) With fresh leafy vegetable samples unavailable from one or more of the sample locations listed on Attachment 13, establish a new monitoring location and document applicable information in the AREOR (per Control 3.12.1.c).

d) When the analysis result for any parameter exceeds the **ACTION** Level listed on Attachments 15, 16, or 17, submit a Special Report to the NRC (per Control 3.12.1.b).

e) When radionuclides other than those listed on Attachments 15, 16, and 17 are detected; and if those radionuclides are the result of plant effluents; and if the potential annual doses due to the radionuclides are greater than the calendar year limits of Controls 3.11.1.2, 3.11.2.2, and 3.11.2.3; submit a Special Report in accordance with Control 3.12.1.b.

LAND USE CENSUS

1. Introduction

   a) 10 CFR 50, Appendix I, Section IV.B.3 requires licensees to identify changes in the use of **UNRESTRICTED AREAS** in order to permit modifications in monitoring programs.

   b) Radiological environmental controls have been established to implement the requirements of 10 CFR 50, Appendix I, Section IV.B.3.

   c) These radiological environmental controls are described below.

2. Controls on the Land Use Census

   a) Identify the location of the nearest milk animal, within a distance of 8 km of the plant site, in each of the 9 meteorological sectors (per Control 3.12.2).

   b) Identify the location of the nearest residence, within a distance of 8 km of the plant site, in each of the 9 meteorological sectors (per Control 3.12.2).

   c) Identify the location of the nearest garden, within a distance of 8 km of the plant site, in each of the 9 meteorological sectors; or if the garden census was not conducted, obtain samples of three different kinds of broad leaf vegetation from the **SITE BOUNDARY** in two different meteorological sectors which have the highest predicted **SITE BOUNDARY** D/Q (per Control 3.12.2).

3. Surveillance Requirement(s)

   a) Perform a land use census that will provide the best results. Example methods may include, but are not limited to, the following:

      (1) door-to-door surveys

      (2) aerial views

      (3) consult local agricultural authorities

   b) Document the results of the land use census in the Annual Radiological Environmental Operating Report in accordance with Technical Specification 5.6.2.

   c) Perform an Independent Technical Review of the land use census data.

4. Responsible Company Organizations

   a) The Chemistry Section, CCNPPI, is responsible for ensuring the performance of the surveillances listed above.

5. Initiating conditions

   a) Conduct the land use census during the growing season, and conduct the land use census at least once per 12 months.

6. Calculation methodology

   a) Calculate doses for the pathways of interest in accordance with the methodologies contained in Regulatory Guide 1.109, or

   b) if methodologies other than those listed in Regulatory Guide 1.109 are used to calculate doses, such methodologies should be documented in the Annual Radiological Environmental Operating Report.

7. Corrective actions

   a) The results of the land use census shall be used to determine the RADIOLOGICAL ENVIRONMENTAL MONITORING Programs sample locations identified on Attachment 13.

   b) If the land use census has identified a location(s) that yields a calculated dose or dose commitment greater than the values currently being calculated in Control 4.11.2.3, perform the following activities.

      (1) Document the new location(s) in the next Annual Radiological Environmer Operating Report in accordance with Technical Specification 5.6.2, and

      (2) revise the figures and tables in the ODCM to reflect the new location(s).

   c) If the land use census has identified a location(s) that yields a calculated dose or dose commitment (via the same exposure pathway) which is 20% greater than the equivalent location identified on Attachment 13, perform the following activities.

      (1) Add the new location(s) to the RADIOLOGICAL ENVIRONMENTAL MONITORING PROGRAM within 30 days,

      (2) document the new location(s) in the next Annual Radiological Environmental Operating Report in accordance with Technical Specification 5.6.2, and

      (3) revise the figures and tables in the ODCM to reflect the new location(s).

INTERLABORATORY COMPARISON PROGRAM

1. Introduction

   a) 10 CFR 50, Appendix I, Section IV.B.2 requires licensees to establish an environmental surveillance and monitoring program for the purpose of evaluating the relationship between quantities of radioactive material released in effluents and resultant radiation doses to individuals.

   b) Radiological environmental controls have been established to ensure that independent checks on the precision and accuracy of the measurements of radioactive material in environmental sample matrices are performed as part of the quality assurance program for environmental monitoring.

   c) These radiological environmental controls are described below.

2. Controls on the Interlaboratory Comparison Program

   a) Analyze INTERLABORATORY COMPARISON PROGRAM samples supplied by either the Commission or a Commission approved laboratory for all parameters listed on Attachments 15, 16, and/or 17, as applicable[1] (per Control 3.12.3).

3. Surveillance Requirement(s)

   a) A summary of the results obtained as part of the Interlaboratory Comparison Program shall be included in the Annual Radiological Environmental Operating Report pursuant to Technical Specification 5.6.2.

   b) This section of the ODCM shall describe the Interlaboratory Comparison Program.

4. Responsible Company Organizations

   a) The CHEMISTRY SECTION, CCNPPI, is responsible for ensuring performance of the surveillances listed above.

5. Initiating conditions

   a) Analyze INTERLABORATORY COMPARISON PROGRAM samples whenever they are supplied by either the Commission or a Commission approved laboratory.

6. Calculation methodology

   a) Analysis methods and calculational methodologies used to satisfy the above surveillances shall be documented in approved procedures.

7. Corrective actions

   a) If analyses are not performed as required, document actions taken to prevent reoccurrence in the Annual Radiological Environmental Operating Report (AREOR) pursuant to Technical Specification 5.6.2.

---

[1] Since no Commission approved laboratory supplies TLDs as part of a comparison program, no TLDs are analyzed as part of the INTERLABORATORY COMPARISON PROGRAM.

ANNUAL RADIOLOGICAL ENVIRONMENTAL OPERATING REPORT

1. Introduction

   a) 10 CFR 50, Appendix I, Section IV.B.2 requires licensees to provide data on measurable levels of radiation and radioactive materials in the environment.

   b) Radiological environmental controls have been established to implement the requirements of 10 CFR 50, Appendix I, Section IV.B.2.

   c) These radiological environmental controls are described below.

2. Controls on the Annual Radiological Environmental Operating Report (AREOR)

   a) The AREOR shall include a summary description of the radiological environmental monitoring program (REMP).

   b) The AREOR shall include a summary description of the Independent Spent Fuel Storage Installation Monitoring Program (ISFSIMP).

   c) The AREOR shall include a table similar to Attachment 13 which states the distance and direction from the central point between the two containment buildings to each of the REMP sample points.

   d) The AREOR shall include a table similar to Attachment 20 which states the distan and direction from the central point of the ISFSI to each of the ISFSIMP sample points.

   e) The AREOR shall include summaries, interpretations, and an analysis of trends of the results of the radiological environmental surveillance activities for the report period.

   f) The AREOR shall include a comparison between the annual REMP results and the Radiological Environmental Operating Report preoperational studies.

   g) The AREOR shall include a comparison between the annual ISFSIMP results and Radiological Environmental Operating Report pre-fuel-load studies.

   h) The AREOR shall include a comparison with operational controls as appropriate.

   i) The AREOR shall include a comparison with the previous environmental surveillance reports.

   j) The AREOR shall include an assessment of the observed impacts of plant operation on the environment.

   k) The AREOR shall include an assessment of the observed impacts of ISFSI operation on the environment.

   l) The AREOR shall include the results of the land use censuses required by Control 3.12.2.

m) The AREOR shall include the results of analysis of all radiological environmental samples taken during the period pursuant to the locations specified on Attachments 13 and 20.

n) The AREOR shall include the results of all environmental radiation measurements taken during the period pursuant to the locations specified on Attachments 13 and 20.

o) The AREOR shall include summarized and tabulated results--in the format of the table in the Radiological Assessment Branch Technical Position, Revision 1, November 1979--of analysis of all radiological environmental samples taken during the period pursuant to the locations specified on Attachments 13 and 20.

p) The AREOR shall include summarized and tabulated results--in the format of the table in the Radiological Assessment Branch Technical Position, Revision 1, November 1979--of all environmental radiation measurements taken during the period pursuant to the locations specified on Attachments 13 and 20.

q) The AREOR shall include an explanation for missing results, if some individual results (as described in the above paragraph) are not available for inclusion with the report.

r) The AREOR shall include any data which was missing from previous reports.

s) The AREOR shall include at least two legible maps[1] covering all REMP sampling locations keyed to a table giving distances and directions from the central point between the two containment buildings.

t) The AREOR shall include at least one legible map covering all ISFSIMP sampling locations keyed to a table giving distances and directions from the central point of the ISFSI.

u) The AREOR shall include results of the licensee participation in the INTERLABORATORY COMPARISON PROGRAM required by Control 3.12.3.

v) The AREOR shall include a discussion of all deviations from the sampling schedules listed on Attachments 14, 15, 16, and 17, and specify the reason(s) for the deviations, and the plan for preventing recurrence.

w) The AREOR shall include a discussion of all analyses in which the LLD listed on Attachments 15, 16, and 17 (and required by Control Table 4.12-1) was not achievable.

x) The AREOR shall include the identification of the cause of unavailability of samples (if any), and describe the locations used for replacement samples.

y) The AREOR shall include any permanent changes in the sample locations in the monitoring program.

---

1 One map shall cover stations near the SITE BOUNDARY; a second shall include the more distant stations.

z) The AREOR shall include revised figure(s) (e.g., like Attachments 18 and 19) and tables (e.g., like Attachment 13) for the ODCM which reflect any new REMP sample location(s).

aa) The AREOR shall include revised figure(s) (e.g., like Attachments 21 and 22) and table(s) (e.g., like Attachment 20) for the ODCM which reflect any new ISFSIMP sample location(s).

bb) The AREOR shall receive an independent review for technical content prior to submittal to the NRC.

cc) Material provided in the AREOR shall be consistent with the objectives outlined in the ODCM and 10 CFR 50, Appendix I, Section IV.3.2, IV.3.3 and IV.C.

3. Surveillance Requirement(s)

a) Write the Annual Radiological Environmental Operating Report covering the previous calendar year's operation of the reactor units.

4. Responsible Company Organizations

a) The Chemistry Section, CCNPPI, is responsible for ensuring the performance of the surveillances listed above[1].

5. Initiating conditions

a) Submit the Routine AREOR (covering operation of the reactor units for the previous calendar year) of each year in accordance with Technical Specification 5.6.2.

6. Calculation methodology

a) Calculational methodologies used to satisfy the above surveillances should be documented in approved procedures, or should be included in the AREOR.

7. Corrective actions

a) If analyses are not performed as required, document actions taken to prevent reoccurrence in the AREOR pursuant to Technical Specification 5.6.2.

---

1 A separate company may be contracted to complete the Routine AREOR.

INDEPENDENT SPENT FUEL STORAGE INSTALLATION MONITORING PROGRAM

1. Introduction

   a) The Technical Specifications for the Independent Spent Fuel Storage Installation[1] (ISFSI), licensed under 10 CFR 72, require that monitoring for the ISFSI be added to the existing environmental monitoring program for CCNPP.

   b) CCNPP has committed to additional monitoring for the ISFSI.[2]

   c) Radiological environmental controls have been established to implement the requirements and commitments described above.

   d) These radiological environmental controls are described below.

2. Controls on the ISFSI Monitoring Program

   a) Environmental monitoring sites, as described in Attachment 20, shall be established to monitor the air, vegetation, and soil as well as direct radiation in the ISFSI environs.[3]

   b) Analysis parameters, analysis frequencies, detection limits, and **ACTION** levels shall conform to the applicable requirements of Controls 3.12.1. (See attachment 14, 15, 16, and 17)

   c) Map(s) shall be maintained and shall show the locations of the environmental monitoring sites with respect to plant facilities. (See attachment 21 and 22).

3. Surveillance Requirements

   a) Surveillances for direct radiation

      (1) Direct radiation dosimetry shall be collected from locations SFDR1-SFDR16, DR7, and DR30 listed in Attachment 20.

      (2) In the event any dosimetry at an existing monitoring location SFDR1-SFDR16, DR7, or DR30 becomes unavailable, place new dosimetry at the monitoring station.

      (3) Analyze the dosimeters at the frequencies and for the parameters identified on Attachment 14.

---

1 The Technical Specifications For Calvert Cliffs Independent Spent Fuel Storage Installation is Appendix "A" to Materials License SNM-2505.

2 See the letter titled "Response to NRC's Comments to Environmental Issues Regarding BGE's License Application for Calvert Cliffs Independent Spent Fuel Storage Installation (ISFSI)" from Mr. R. E. Denton (BGE) to Director, Office of Nuclear Material Safety and Safeguards (NRC), dated November 1, 1990.

3 Environmental monitoring sites and monitoring parameters specifically excluded from the ISFSIMP include airborne radioiodines, radioiodines in food products, surface water, and fish and invertebrates. Additionally, soil samples shall be collected in lieu of shoreline sediment. The sampling frequency for vegetation and soil shall be quarterly.

b) Surveillances for airborne particulate activity

(1) Air particulate samples shall be collected from locations A1 and SFA1-SFA4 listed on Attachment 20.

(2) In the event any particulate filter becomes unavailable from an existing monitoring location A1 or SFA1-SFA4 described on Attachment 20, place a new particulate filter in the air sampler at the monitoring station.

(3) Analyze the samples at the frequencies and for the parameters identified under "Particulate Filters" on Attachment 15.

c) Surveillances for deposition on vegetation

(1) The vegetation samples SFb1-SFb5 shall be collected from the locations listed on Attachment 20.

(2) In the event any of the sampling sites SFb1-SFb5 described on Attachment 20 become unavailable, establish new sampling sites as described below:

(a) In lieu of sample SFb1, collect vegetation grown in the NW sector of the ISFSI.

(b) In lieu of sample SFb2, collect vegetation grown in the general vicinity of the CCNPP Visitor's Center.

(c) In lieu of sample SFb3, collect vegetation grown in the North North West sector of the ISFSI.

(d) In lieu of sample SFb4, collect vegetation grown in the South-Southeast sector of the ISFSI.

(e) In lieu of sample SFb5, collect vegetation grown in the East-Southeast sector of the ISFSI.

(3) Analyze the samples quarterly for the non-iodine parameters identified under "Food Products" on Attachment 17.

d) Surveillances for soil activity

(1) The soil samples SFS1-SFS5 shall be collected from the locations listed on Attachment 20.

(2) In the event any of the sampling sites SFS1-SFS5 described on Attachment 20 become unavailable, establish new sampling sites as described below:

(a) In lieu of sample SFS1, collect soil in the NW sector of the ISFSI.

(b) In lieu of sample SFS2, collect soil in the general vicinity of the CCNPP Visitor's Center.

(c) In lieu of sample SFS3, collect soil in the North North West sector of the ISFSI.

(d) In lieu of sample SFS4, collect soil in the South-Southeast sector of the ISFSI.

(e) In lieu of sample SFS5, collect soil in the East-Southeast sector of the ISFSI.

(3) Analyze the samples quarterly for the parameters identified under "Shoreline Sediment Sample" on Attachment 16.

4. Responsible Company Organizations

a) The CHEMISTRY SECTION, CCNPPI, is responsible for ensuring the performance of the surveillances listed above.

5. Initiating conditions

a) Collect samples in accordance with the frequencies specified on Attachments 14, 15, 16, and 17. Soil and vegetation samples shall be collected quarterly.

b) Analyze samples in accordance with the frequencies specified on Attachments 14, 15, 16, and 17. Soil and vegetation samples shall be analyzed quarterly.

c) Calculate the potential annual doses in accordance with the methodology outlined elsewhere in this section if any of the following conditions are true:

(1) any of the above surveillance results reveal levels of environmental activity greater than the **ACTION** Levels specified on Attachments 14, 15, 16, and 17, as appropriate. (per Control Table 3.12-2), or

(2) any radionuclides other than those listed on Attachments 14, 15, 16, and 17 are detected, and the radionuclides are the result of plant effluents or radionuclide deposition from the ISFSI, and the potential annual doses due to the radionuclides are greater than the limits listed in Control 3.12.1.b.

d) The Chemistry Section, CCNPPI, is responsible for notifying the General Supervisor--Chemistry, CCNPP, if any of the following conditions are true:

(1) any of the above surveillance results reveal levels of environmental activity greater than the **ACTION** Levels specified on Attachments 14, 15, 16, and 17, as appropriate (per Control Table 3.12-2), or

(2) any radionuclides other than those in Attachments 14, 15, 16, and 17 are detected, and the radionuclides are the result of plant effluents or radionuclide deposition from the ISFSI, and the potential annual doses due to the radionuclides are greater than the limits listed in Control 3.12.1.b.

6. Calculation methodology

a) If any (of the above) surveillance results reveal levels of environmental activity greater than the **ACTION** Levels specified on Attachments 14, 15, 16, or 17 (per Control Table 3.12-2), calculate potential annual doses for the pathway of interest, in accordance with the methodologies contained in Regulatory Guide 1.109.

b) If methodologies other than those listed in Regulatory Guide 1.109 are used to calculate potential annual doses, such methodologies shall be documented in accordance with Control 3.12.1.b.

7. Corrective actions

a) If a sample is unobtainable due to sampling equipment malfunction, then attempt to restore equipment to operable status before the end of the next sampling period, and document in the AREOR.

b) If the ISFSIMP is not being conducted in accordance with the "Surveillance Requirements" listed elsewhere in this section, document deviations in the AREOR.

c) When the analysis result for any parameter exceeds the **ACTION** Level listed on Attachments 15, 16, or 17, as appropriate, submit a Special Report to the NRC (per Control 3.12.1.b).

d) When radionuclides other than those listed on Attachments 15, 16, and 17 are detected, and when those radionuclides are the result of plant effluents or radionuclide deposition from the ISFSI, submit a Special Report if required by and in accordance with Control 3.12.1.b.

RADIOACTIVE EFFLUENT RELEASE REPORT

INTRODUCTION

1. Technical Specification 5.6.3 requires submittal of a written report to the NRC every 12 months.

2. The report is described below.

RESPONSIBILITIES

1. The General Supervisor Chemistry is responsible for the timely and accurate completion of the report.

REPORT CONTENTS

1. The Radioactive Effluent Release Report (RERR) covering the operation of the unit shall be submitted every 12 months in accordance with 10 CFR 50.36a.

2. The RERR shall include a summary of the quantities of radioactive liquid and gaseous effluents and solid waste released from the units. The material provided shall be consistent with the objectives outlined in the ODCM and in conformance to 10CFR50.36a and 10CFR50, Appendix I, section IV.B.1. Principle Gamma Emitters from Batch Waste Releases and Turbine Building Sump shall be analyzed and included in this report pursuant to Table Notation c of Control Table 4.11-1, "Radioactive Liquid Waste Sampling and Analysis Program." In addition, Principal Gamma Emitters from the Waste Gas Storage Tank, Containment Purge and Vent, and the Main Vent shall be analyzed and included in this report pursuant to Table Notation b of Controls Table 4.11-2, "Radioactive Gaseous Waste Sampling and Analysis Program." Additional information which may be required in the report is contained in Controls 3.3.3.9.b, 3.3.3.10.b and Technical Specification 5.6.3.

3. The RERR shall include an annual summary of hourly meteorological data collected over the previous year. This annual summary may be either in the form of an hour-by-hour listing on magnetic tape of wind speed, wind direction, atmospheric stability, and precipitation (if measured), or in the form of joint frequency distributions of wind speed, wind direction, and atmospheric stability.[1] This same report shall include an assessment of the radiation doses due to the radioactive liquid and gaseous effluents released from the unit or station during the previous calendar year. The assessment of radiation doses shall be performed in accordance with the methodology and parameters in the **OFFSITE DOSE CALCULATION MANUAL** (ODCM).

4. The RERR shall also include an assessment of radiation doses to the likely most exposed **MEMBER OF THE PUBLIC** from reactor releases and other nearby uranium fuel cycle sources, including doses from primary effluent pathways and direct radiation, for the previous calendar year to show conformance with 40 CFR Part 190, Environmental Radiation Protection Standards for Nuclear Power Operation. Acceptable methods for calculating the dose contribution from liquid and gaseous effluents are given in Regulatory Guide 1.109, Rev. 1, October 1977, and NUREG-0133, "Preparation of Radiological Effluent Technical Specifications for Nuclear Power Plants."

---

[1] In lieu of submission with the Radioactive Effluent Release Report, this summary of required meteorological data may be retained on site in a file that shall be provided to the NRC upon request.

5. The RERR shall include the following information for each class of solid waste (as defined by 10 CFR Part 61) shipped offsite during the report period:

   a. Container volume,

   b. Total curie quantity (specify whether determined by measurement or estimate),

   c. Principal radionuclides (specify whether determined by measurement or estimate),

   d. Source of waste and processing employed (e.g., dewatered spent resin, compacted dry waste, evaporator bottoms),

   e. Solidification agent or absorbent (e.g., cement).

6. The RERR shall include a list and description of unplanned releases from the site to **UNRESTRICTED AREAS** of radioactive materials in gaseous and liquid effluents made during the reporting period.

7. The RERR shall include any changes made during the reporting period to the **OFFSITE DOSE CALCULATION MANUAL** (ODCM) and a listing of new locations for dose calculations identified by the annual land use census pursuant to Control 3.12.2.

8. The RERR shall include any changes made during the reporting period to the **PROCESS CONTROL PROGRAM** (PCP)[1]. The report shall contain:

   a. A description of the equipment, components and processes involved.

   b. Documentation of the fact that the change, including the safety analysis, was reviewed and found acceptable by the POSRC.

REPORT SUBMITTAL

1. Prior to submittal a Independent Technical Review will be performed.

2. The RERR will be submitted every 12 months in accordance with 10 CFR 50.36a and 50.4.

---

[1] Licensee initiated changes to the PCP shall become effective upon review by the POSRC and approval of the Plant General Manager.

ADMINISTRATION OF THE ODCM

INTRODUCTION

1. Procedures covering the ODCM and the implementation of the ODCM shall be implemented.
2. Administrative controls have been established to implement controls on the ODCM.
3. These administrative controls are described below.

CONTROLS ON THE ODCM

1. The format, organization, content, and administration of the ODCM are controlled by CH-1-103.
2. Methodologies identified in the ODCM are implemented by various CCNNPI organizations in accordance with approved procedures. (See the "RESPONSIBILITIES" section of CH-1-103 for a list of those Sections of CCNNPI responsible for approving and maintaining procedures which implement the requirements of the ODCM.)
3. The main vent stack flow rates shall be verified in accordance with the surveillances described in the following section, "Surveillance Requirements".
4. Licensee initiated changes to the ODCM:
   a) Shall be documented and records of reviews performed shall be retained. This documentation shall contain
      (1) Sufficient information to support the change(s) together with the appropriate analyses or evaluations justifying the change(s);
      (2) A determination that the change(s) maintain the levels of radioactive effluent control required by 10 CFR 20 (1990), 10 CFR 20.1302, 40 CFR Part 190, 10 CFR 50.36a, and 10 CFR Part 50, Appendix I, and not adversely impact the accuracy or reliability of effluent dose, or setpoint calculations;
   b) Shall become effective upon review by the onsite review function and approval of the plant manager; and
   c) Shall be submitted to the NRC in the form of a complete, legible copy of the entire ODCM as part of or concurrent with the Radioactive Effluent Release Report for the period of the report in which any change in the ODCM was made. Each change shall be identified by markings in the margin of the affected pages, clearly indicating the area of the page that was changed, and shall indicate the date (i.e., month and year) the change was implemented.

SURVEILLANCE REQUIREMENTS

1. Complete audits and PERIODIC REVIEWS of the ODCM in accordance with CH-1-103.

2. Determine main vent stack flow rates for both units as described below.

   a) The main vent stack flow rate shall be determined, in accordance with approved procedures, at least once per 6 months (± 25%).

   b) The Electrical and Control Section shall be responsible for performing this test.

   c) The results of the main vent flow rate test shall be evaluated to ensure the main vent flow rates used in the ODCM are an accurate reflection of the true main vent flow rates.

   d) IF the main vent stack flow rate for either unit, as determined in accordance with approved Test and Equipment procedure(s), changes ± 10% from the values referenced in Attachment 7 of the ODCM, a technical evaluation shall be initiated to determine if the ODCM should be revised.

RESPONSIBLE COMPANY ORGANIZATIONS

1. CH-1-103 identifies the responsibilities of various personnel and company organizations which administer and implement the ODCM. This section of the ODCM identifies company organizations which are assigned responsibility for implementing the surveillances descri' above.

2. The Electrical and Control Section is responsible for ensuring the main vent stack flow rate test procedure (e.g., STP-M-462-1, STP-M-462-2 or equivalent) is completed in accordance with the surveillances listed above.

3. The Electrical and Control Section is responsible for forwarding main vent stack flow rate test results to the General Supervisor - Chemistry.

4. The RETS Program Manager, CCNPPI CHEMISTRY SECTION, is responsible for evaluating main vent flow rate test results (e.g., STP-M-462-1, STP-M-462-2 or equivalent results) and for performing the technical evaluation described in the above surveillances.

INITIATING CONDITIONS

1. Main vent stack flow rates shall be determined at least once per 6 months (± 25%), or more often if required by Controls.

2. Complete PERIODIC REVIEWS of the ODCM as specified in CH-1-103.

CALCULATION METHODOLOGIES

1. Calculational methodologies used to satisfy the above surveillances should be documented in approved procedures.

2. Documents which serve as a basis for calculation methodologies used in the ODCM should be maintained in an accessible location.

   (1) Supporting documents may be incorporated into the ODCM (e.g., as Attachments).

   (2) Supporting documents may be maintained in a "procedure history file".

   (3) Supporting documents may be identified in the "references" section of the ODCM.

CORRECTIVE ACTIONS

1. IF main vent stack flow rates, as determined in accordance with appropriate Test Equipment procedure(s), change ± 10% from the values referenced in Attachment 7 of the ODCM, a technical evaluation shall be initiated to determine if the ODCM should be revised.

BASES

1. [B527], NRC Inspection Report INSR 91-30/30

Attachment 1
Final Grading And Drainage Plan

A reference diagram which depicts the grading for and the drainage from the Calvert Cliffs Nuclear Power Plant can be found in the following reference:

Final Grading And Drainage Plan Calvert Cliffs Nuclear Power Plant Units 1 and 2, BGE Document ID Number: 61517SH0001 BGE Document ID Number: 61514SH0002

The above referenced grading and drainage plan is intended for reference only. This drawing may not reflect the changes and modifications since March 1975.

Attachment 2
Sources of Liquid Radioactive Waste

Waste Stream	Radiation Monitor	Type of Release	Max. Discharge Flow Rate		Maximum Volume		Notes
			gal/min	liters/min	gal	liters	
Rx. Coolant Wst. Mon. Tk.	0-RE-2201	Batch	120	454	90000[13]	3.407E5[13]	
Rx. Coolant Wst. Rec. Tk.	0-RE-2201	Batch	120	454	90000[13]	3.407E5[13]	
Misc. Wst. Mon. Tk.	0-RE-2201	Batch	120	454	4000[13]	15140[13]	
Misc. Wst. Rec. Tk.	0-RE-2201	Batch	120	454	4000[13]	15140[13]	
Aux. Boiler Steam Drum	All releases are via Auxiliary Blowdown Tank						
Aux. Blowdown Tk.	Unmonitored	Continuous	200[12]	757	N/A	N/A	
Waste Neut. Tk. 11	Unmonitored	Batch	1000[1]	3790[1]	45988	1.74E5	
Waste Neut. Tk. 12	Unmonitored	Batch	1000[1]	3790[1]	47749	1.80E5	
Stm. Gen. Blowdown Tk.	1/2-RE-4014[14]	Continuous/ Batch[11]	225[2]	852[2]	2350[3]	8895[3]	
Component Cooling Water[4]	Unmonitored	Continuous	variable[5]	variable[5]	44090[6]	1.669E5	
Condenser Hotwells	Unmonitored	Batch[10]	4500[7]	17000[7]	1.05E5	3.97E5	
Salt Water System	Unmonitored	Continuous	15500	58670	N/A	N/A	
Condensate Storage Tank	Unmonitored	Batch	Variable[8]	Variable[8]	3.5E5[9]	1.3E6[9]	
Demin. Water Storage Tank	Unmonitored	Batch	Variable[8]	Variable[8]	3.5E5[9]	1.3E6[9]	
Precoat Sump	Unmonitored	Continuous	50	94.6	10305[3]	39004[3]	

Attachment 2
Sources of Liquid Radioactive Waste

Waste Stream	Radiation Monitor	Type of Release	Max. Discharge Flow Rate		Maximum Volume		Notes
			Gal/min	liters/min	gal	liters	
Aux. Building Roof Drains[19]	Unmonitored	Continuous	Variable	Variable	N/A	N/A	
Sewage Treatment Plant	Unmonitored	Continuous	185	700	N/A	N/A	
Turbine Bldg. Sump No. 11	Unmonitored	Continuous	470	889	1950	7381	
Turbine Bldg. Sump No. 12	Unmonitored	Continuous	470	889	2415	9141	
Turbine Bldg. Sump No. 21	Unmonitored	Continuous	470	889	2490	9425	
Turbine Bldg. Sump No. 22	Unmonitored	Continuous	470	889	2182	8259	
Diesel Oil Interceptor Sump	Unmonitored	Continuous	100	378.5	5790	21920	
Yard Oil Interceptor	Unmonitored	Continuous	variable[15]	variable[15]	N/A	N/A	
Refueling Water Tank	Unmonitored	Batch/Cont.[17]	variable[15]	variable[15]	4.2E5	1.6E6	
Condensate Storage Tank	Unmonitored	Batch/Cont.[17]	variable[15]	variable[15]	3.5E5[16]	1.3E6[16]	
Service Water System	1/2-RE-1595	Continuous	variable[15]	variable[15]	31418	1.189E5	
Plant Heating System[18]	Unmonitored	Continuous	variable[15]	variable[15]	N/A	N/A	

Attachment 2
Sources of Liquid Radioactive Waste

1. This flow rate is only an approximation. The motive force is gravity
2. This is the maximum flow rate. The actual flow rate will be considerably less.
3. This is the maximum volume of the tank for a BATCH RELEASE. If the release is a **CONTINUOUS RELEASE**, the volume discharged would be calculated from the discharge flow rate and duration of the release.
4. There is no direct path by which radioactive liquid from the CCW System could enter outfall 001. Liquid from the CCW System may leak into either the Salt Water System (which drains to outfall 001) or the Liquid Waste Processing System (via Aux. Bldg. Drains).
5. Radioactive liquid is not normally released from the CCW system. Flow rate to outfall 001 may occur via Salt Water System. For this pathway, the flow rate will vary (e.g., depending on size of leak). See Safety Analysis No. 2, FCR 82-1053, Supplement 1.
6. System volume is 5894 cubic feet. Conversion constant is 0.13368 cubic feet per gallon.
7. The flow rate shown here is the flow rate for one condensate pump. Verify the number on condensate pumps in service, and modify this flow rate accordingly.
8. Flow rate should be calculated on a case-by-case basis.
9. Volume obtained from "Plant Data Book", BGE CCNPP Units 1 and 2, Bechtel Power Corporation, Volume 1, Job 6750.
10. May be a **CONTINUOUS RELEASE** if contaminated sealing steam is operated during the release.
11. Although steam generator releases may be either CONTINUOUS RELEASES or BATCH RELEASES. Verify type of release to be conducted prior to discharge.
12. This is the maximum rated discharge for two pumps in operation.
13. The volume specified is the design basis volume from Table 11-1 of the UFSAR.
14. The steam generator blowdown effluent radiation monitor, 1/2-RE-4095, may be equivalent to the 1/2-RE-4014 (see part 5, Liquid Effluent Radiation Monitor Alarm and Fixed Setpoints, para. 2)
15. Maximum discharge flow rate shall be determined on a case-by-case basis.
16. Volume obtained from "Plant Data Book", BGE CCNPP Units 1 and 2, Bechtel Power Corporation, Volume 1, Job 6750.
17. Releases via this pathway would be considered a **BATCH RELEASE** if a catastrophic tank failure occurred. In the event of a small leak, the release may be considered a **CONTINUOUS RELEASE**. The release mode should be determined on a case-by-case basis.
18. The plant heating system is a closed system and is not normally released to the environment. In the event of a leak, the effluent may be released to the environment via the turbine building sumps. In some cases, depending on the location of the leak, the effluent would be collected in the auxiliary building sump and subsequently released through the liquid radioactive waste processing system. The effluent pathway should be determined on a case-by-case basis.
19. Plant drawings indicate that these drains discharge to outfalls 003 and 004.

Attachment 3

(This page intentionally left blank.)

Attachment 4
Block Diagram of Liquid Radioactive Waste Systems

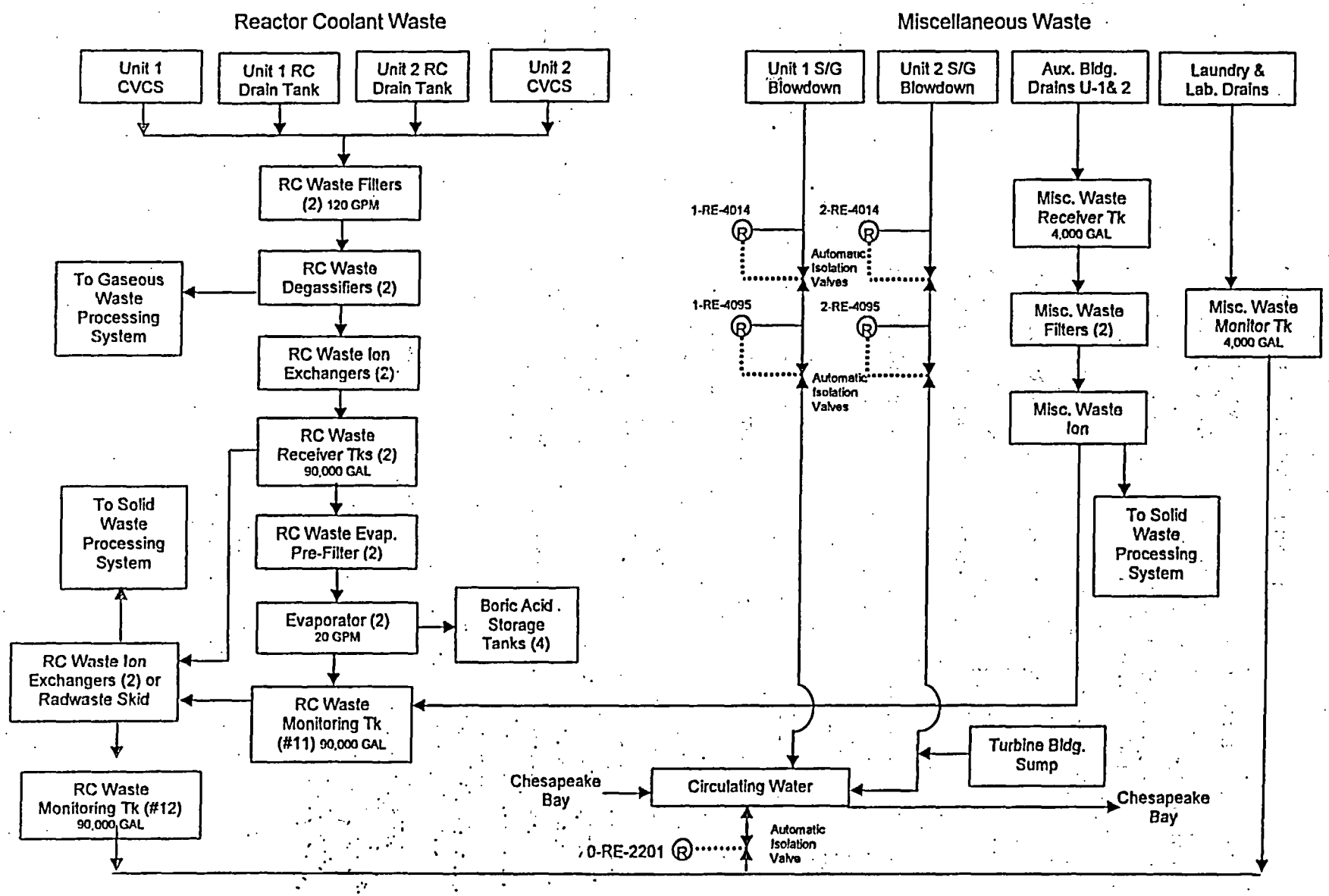

Attachment 5
Radionuclides in Typical Radwaste Discharges

The term f_i -- a fraction which represents the relative activity contribution of nuclide i to the average total effluent activity -- is used in several equations in the ODCM (e.g., equations 2G, 5G, 3L, and 4L). This attachment provides guidance for calculating the values of f_i.

1. Select the calendar quarters which contain at least one "typical" liquid (or gas) release (see definition of TYPICAL RADWASTE RELEASE).

2. For each of the calendar quarters selected above, obtain a listing of the nuclides, nuclide activities, and release (end) dates.
   a. This data may be obtained from the Radioactive Effluent Release Report(s) for the time periods of interest, or
   b. This data may be obtained from a computer-based effluent management system (if available).
   c. The values of nuclide activities and release end times may be close approximations of the true values.

3. Sum the quarterly activities (curies) for each individual radionuclide.

$$A_{iT} = \Sigma A_{iQ} \qquad \text{Eq. 1R}$$

4. Sum the quarterly activities for all radionuclides, i.

$$A_T = \Sigma A_{iT} \qquad \text{Eq}$$

5. Calculate the fraction of the total activity attributable to each radionuclide (i.e., the relative activity of nuclide i).

$$f_i = A_{iT} / A_T \qquad \text{Eq. 3R}$$

Attachment 6
Liquid Effluent Dose Factors (mrem/hr per uCi/ml)

Nuclide	Bone	Liver	Tbody	Thyroid	Kidney	Lung	Gitract
H-3	0.000E+00	2.820E-01	2.820E-01	2.820E-01	2.820E-01	2.820E-01	2.820E-01
BE-7	2.700E+01	1.100E+01	6.500E+01	1.300E+00	1.600E+01	3.100E+00	2.700E+02
C-14	1.450E+04	2.900E+03	2.900E+03	2.900E+03	2.900E+03	2.900E+03	2.900E+03
NA-24	4.570E-01	4.570E-01	4.570E-01	4.570E-01	4.570E-01	4.570E-01	4.570E-01
P-32	4.690E+06	2.910E+05	1.810E+05	0.000E+00	0.000E+00	0.000E+00	5.270E+05
CR-51	0.000E+00	0.000E+00	5.580E+00	3.340E+00	1.230E+00	7.400E+00	1.400E+03
MN-54	0.000E+00	7.060E+03	1.350E+03	0.000E+00	2.100E+03	0.000E+00	2.160E+04
MN-56	0.000E+00	1.780E+02	3.150E+01	0.000E+00	2.260E+02	0.000E+00	5.670E+03
FE-55	5.110E+04	3.530E+04	8.230E+03	0.000E+00	0.000E+00	1.970E+04	2.030E+04
FE-59	8.060E+04	1.900E+05	7.270E+04	0.000E+00	0.000E+00	5.300E+04	6.320E+05
CO-57	0.000E+00	1.420E+02	2.360E+02	0.000E+00	0.000E+00	0.000E+00	3.590E+03
CO-58	0.000E+00	6.030E+02	1.350E+03	0.000E+00	0.000E+00	0.000E+00	1.220E+04
CO-60	0.000E+00	1.730E+03	3.820E+03	0.000E+00	0.000E+00	0.000E+00	3.250E+04
NI-63	4.960E+04	3.440E+03	1.670E+03	0.000E+00	0.000E+00	0.000E+00	7.180E+02
NI-65	2.020E+02	2.620E+01	1.200E+01	0.000E+00	0.000E+00	0.000E+00	6.650E+02
CU-64	0.000E+00	2.140E+02	1.010E+02	0.000E+00	5.400E+02	0.000E+00	1.830E+04
ZN-65	1.610E+05	5.130E+05	2.320E+05	0.000E+00	3.430E+05	0.000E+00	3.230E+05
ZN-69	3.430E+02	6.560E+02	4.560E+01	0.000E+00	4.260E+02	0.000E+00	9.850E+01
BR-82	0.000E+00	0.000E+00	4.070E+00	0.000E+00	0.000E+00	0.000E+00	4.670E+00
BR-83	0.000E+00	0.000E+00	7.250E-02	0.000E+00	0.000E+00	0.000E+00	1.040E-01
BR-84	0.000E+00	0.000E+00	9.390E-02	0.000E+00	0.000E+00	0.000E+00	7.370E-07
BR-85	0.000E+00	0.000E+00	3.860E-03	0.000E+00	0.000E+00	0.000E+00	0.000E+00
RB-86	0.000E+00	6.240E+02	2.910E+02	0.000E+00	0.000E+00	0.000E+00	1.230E+02
RB-88	0.000E+00	1.790E+00	9.490E-01	0.000E+00	0.000E+00	0.000E+00	0.000E+00
RB-89	0.000E+00	1.190E+00	8.340E-01	0.000E+00	0.000E+00	0.000E+00	0.000E+00
SR-89	4.990E+03	0.000E+00	1.430E+02	0.000E+00	0.000E+00	0.000E+00	8.000E+02
SR-90	1.230E+05	0.000E+00	3.010E+04	0.000E+00	0.000E+00	0.000E+00	3.550E+03
SR-91	9.180E+01	0.000E+00	3.710E+00	0.000E+00	0.000E+00	0.000E+00	4.370E+02
SR-92	3.480E+01	0.000E+00	1.510E+00	0.000E+00	0.000E+00	0.000E+00	6.900E+02
Y-90	6.060E+00	0.000E+00	1.630E-01	0.000E+00	0.000E+00	0.000E+00	6.420E+04
Y-91M	5.730E-02	0.000E+00	2.220E-03	0.000E+00	0.000E+00	0.000E+00	1.680E-01
Y-91	8.880E+01	0.000E+00	2.370E+00	0.000E+00	0.000E+00	0.000E+00	4.890E+04
Y-92	5.320E-01	0.000E+00	1.560E-02	0.000E+00	0.000E+00	0.000E+00	9.320E+03
Y-93	1.690E+00	0.000E+00	4.660E-02	0.000E+00	0.000E+00	0.000E+00	5.350E+04
ZR-95	1.590E+01	5.110E+00	3.460E+00	0.000E+00	8.020E+00	0.000E+00	1.620E+04
ZR-97	8.810E-01	1.780E-01	8.130E-02	0.000E+00	2.680E-01	0.000E+00	5.510E+04
NB-95	4.470E+02	2.490E+02	1.340E+02	0.000E+00	2.460E+02	0.000E+00	1.510E+06
NB-97	3.750E+00	9.490E-01	3.460E-01	0.000E+00	1.110E+00	0.000E+00	3.500E+03

Attachment 6
Liquid Effluent Dose Factors (mrem/hr per uCi/ml)

Nuclide	Bone	Liver	Tbody	Thyroid	Kidney	Lung	Gitract
MO-99	0.000E+00	1.280E+02	2.430E+01	0.000E+00	2.890E+02	0.000E+00	2.960E+02
TC-99M	1.300E-02	3.660E-02	4.660E-01	0.000E+00	5.560E-01	1.790E-02	2.170E+01
TC-101	1.330E-02	1.920E-02	1.880E-01	0.000E+00	3.460E-01	9.810E-03	0.000E+00
RU-103	1.070E+02	0.000E+00	4.600E+01	0.000E+00	4.070E+02	0.000E+00	1.250E+04
RU-105	8.890E+00	0.000E+00	3.510E+00	0.000E+00	1.150E+02	0.000E+00	5.440E+03
RU-106	1.590E+03	0.000E+00	2.010E+02	0.000E+00	3.060E+03	0.000E+00	1.030E+05
RH-103M	0.000E+00	0.000E+00	0.000E+00	0.000E+00	0.000E+00	0.000E+00	0.000E+00
RH-106	0.000E+00	0.000E+00	0.000E+00	0.000E+00	0.000E+00	0.000E+00	0.000E+00
CD-109	2.100E+05	4.000E+06	1.600E+06	1.500E+05	2.200E+07	1.800E+05	2.500E+06
AG-110M	1.560E+03	1.450E+03	8.600E+02	0.000E+00	2.850E+03	0.000E+00	5.910E+05
SN-113	6.700E+03	1.200E+03	2.100E+04	6.200E+02	1.600E+03	7.300E+02	2.200E+05
SB-122	5.300E+01	5.520E+01	6.690E+02	8.780E+00	2.610E+01	1.140E+01	6.580E+03
SB-124	2.770E+02	5.230E+00	1.100E+02	6.710E-01	0.000E+00	2.150E+02	7.860E+03
SB-125	1.770E+02	1.980E+00	4.210E+01	1.800E-01	0.000E+00	1.360E+02	1.950E+03
TE-125M	2.170E+02	7.860E+01	2.910E+01	6.520E+01	8.820E+02	0.000E+00	8.660E+02
TE-127M	5.480E+02	1.960E+02	6.680E+01	1.400E+02	2.230E+03	0.000E+00	1.840E+03
TE-127	8.900E+00	3.200E+00	1.930E+00	6.600E+00	3.630E+01	0.000E+00	7.030E+02
TE-129M	9.310E+02	3.470E+02	1.470E+02	3.200E+02	3.890E+03	0.000E+00	4.690E+03
TE-129	2.540E+00	9.550E-01	6.190E-01	1.950E+00	1.070E+01	0.000E+00	1.920E+00
TE-131M	1.400E+02	6.850E+01	5.710E+01	1.080E+02	6.940E+02	0.000E+00	6.800E+03
TE-131	1.590E+00	6.660E-01	5.030E-01	1.310E+00	6.990E+00	0.000E+00	2.260E-01
TE-132	2.040E+02	1.320E+02	1.240E+02	1.460E+02	1.270E+03	0.000E+00	6.240E+03
I-130	3.960E+01	1.170E+02	4.610E+01	9.910E+03	1.820E+02	0.000E+00	1.010E+02
I-131	2.180E+02	3.120E+02	1.790E+02	1.020E+05	5.350E+02	0.000E+00	8.230E+01
I-132	1.060E+01	2.850E+01	9.960E+00	9.960E+02	4.540E+01	0.000E+00	5.350E+00
I-133	7.450E+01	1.300E+02	3.950E+01	1.900E+04	2.260E+02	0.000E+00	1.160E+02
I-134	5.560E+00	1.510E+01	5.400E+00	2.620E+02	2.400E+01	0.000E+00	1.320E-02
I-135	2.320E+01	6.080E+01	2.240E+01	4.010E+03	9.750E+01	0.000E+00	6.870E+01
CS-134	6.840E+03	1.630E+04	1.330E+04	0.000E+00	5.270E+03	1.750E+03	2.850E+02
CS-136	7.160E+02	2.830E+03	2.040E+03	0.000E+00	1.570E+03	2.160E+02	3.210E+02
CS-137	8.770E+03	1.200E+04	7.850E+03	0.000E+00	4.070E+03	1.350E+03	2.320E+02
CS-138	6.070E+00	1.200E+01	5.940E+00	0.000E+00	8.810E+00	8.700E-01	5.120E-05
BA-139	7.850E+00	5.590E-03	2.300E-01	0.000E+00	5.230E-03	3.170E-03	1.390E+01
BA-140	1.640E+03	2.060E+00	1.080E+02	0.000E+00	7.020E-01	1.180E+00	3.380E+03
BA-141	3.810E+00	2.880E-03	1.290E-01	0.000E+00	2.680E-03	1.630E-03	1.800E-09

Attachment 6
Liquid Effluent Dose Factors (mrem/hr per uCi/ml)

Nuclide	Bone	Liver	Tbody	Thyroid	Kidney	Lung	Gitract
BA-142	1.720E+00	1.770E-03	1.080E-01	0.000E+00	1.500E-03	1.000E-03	0.000E+00
LA-140	1.570E+00	7.940E-01	2.100E-01	0.000E+00	0.000E+00	0.000E+00	5.830E+04
CE-139	1.000E+02	4.800E+01	3.700E+02	6.200E-01	3.400E+01	4.800E+00	3.200E+03
LA-142	8.060E-02	3.670E-02	9.130E-03	0.000E+00	0.000E+00	0.000E+00	2.680E+02
CE-141	3.430E+00	2.320E+00	2.630E-01	0.000E+00	1.080E+00	0.000E+00	8.860E+03
CE-143	6.040E-01	4.460E+02	4.940E-02	0.000E+00	1.970E-01	0.000E+00	1.670E+04
CE-144	1.790E+02	7.470E+01	9.590E+00	0.000E+00	4.430E+01	0.000E+00	6.040E+04
PR-143	5.790E+00	2.320E+00	2.870E-01	0.000E+00	1.340E+00	0.000E+00	2.540E+04
PR-144	1.900E-02	7.870E-03	9.640E-04	0.000E+00	4.440E-03	0.000E+00	2.730E-09
ND-147	3.960E+00	4.580E+00	2.740E-01	0.000E+00	2.680E+00	0.000E+00	2.200E+04
EU-154	3.870E+02	4.760E+01	3.390E+01	0.000E+00	2.280E+02	0.000E+00	3.450E+04
EU-155	5.420E+01	7.68E+00	4.960E+00	0.000E+00	3.550E+01	0.000E+00	6.050E+03
W-187	9.160E+00	7.660E+00	2.680E+00	0.000E+00	0.000E+00	0.000E+00	2.510E+03
NP-239	3.530E-02	3.470E-03	1.910E-03	0.000E+00	1.080E-02	0.000E+00	7.110E+02
HG-203	1.400E+05	0.000E+00	1.600E+05	0.000E+00	1.600E+06	1.000E+05	3.200E+05

Attachment 7
General Information Related to Gaseous Releases via the Main Vents

Waste Stream	Radiation Monitor	Type of release	Nominal Discharge Flow Rate		Maximum Discharge Flow Rate		Note
			m^3 / sec	SCFM	m^3/sec	SCFM	
Waste Gas System (WGDT)	0-RE-2191[1]	Batch	N/A	N/A	2.36E-2	50	
Cntmt. Vent (via H2 Purge)	1/2-RE-5415[2]	Batch[3]	2.36E-2	50	2.93E-1	620	
Unit 1 Cntmt. Purge (100%)	1-RE-5415[4]	Continuous[5]	N/A	N/A	22.4[6]	47,387[6]	
Unit 2 Cntmt. Purge (100%)	2-RE-5415[7]	Continuous[5]	N/A	N/A	20.9[8]	44,320[8]	
Unit 1 Main Vent Release	1-RE-5415[4]	Continuous	56.3[9]	119339[9]	62.0[10]	131273[10]	
Unit 2 Main Vent Release	2-RE-5415[7]	Continuous	42.7[9]	90500[9]	47.0[10]	99550[10]	

1 Since the WGDT is released to the plant vent stack, 1/2-RE-5415 and 1/2-RE-5416 may also be used to monitor releases from a WGDT.
2 The WRGM, 1/2-RE-5416, may also monitor these releases.
3 A containment vent is considered a "batch" release (even though inleakage of radioactive gases into the containment atmosphere may occur during the time the vent is in progress).
4 The WRGM, 1-RE-5416, may also monitor these releases.
5 A purge is considered to be a CONTINUOUS RELEASE due to potential introduction of radioactive gases to the containment atmosphere during containment maintenance activities.
6 This is the purge flow rate as determined by approved test procedure (i.e., TE-006) in April 1998.
7 The WRGM, 2-RE-5416, may also monitor these releases.
8 This is the purge flow rate as determined by approved test procedure (i.e., TE-006) in March 2001.
9 This is the mean main vent stack flow rate as determined by approved test procedure (i.e., TE-001 from 8/1990-3/1996 for Unit 1 and TE-001 from 8/1990-3/2000 for Unit 2 or STP-M-462-1 for Unit 1 and STP-M-462-2 for Unit 2 beginning in May 2002).
10 This is the maximum vent stack flow rate which is equal to 110% of the Nominal Discharge Flow rate.

Attachment 8
General Information Related to Gaseous Releases via Pathways other than the Main Vents

Waste Streams	Radiation Monitor	Type of Release	Nominal Discharge Flow Rate	Notes
Aux. Boiler Deaerator	Unmonitored	See Footnote[1]		See Footnote[2]
Stm. Gen. Atm. Stm. Dumps	Unmonitored	See Footnote[1]		See Footnote[2]
Plant Nitrogen System	Unmonitored	See Footnote[1]		See Footnote[2]
Turbine Bldg. Vent. Exh[3]	Unmonitored	See Footnote[1]		See Footnote[2]
Emergency Air Lock	Unmonitored	See Footnote[1]		See Footnote[2]
Plant Compressed Air	Unmonitored	See Footnote[1]		See Footnote[2]
Main Steam Line Penetrations	Unmonitored	See Footnote[1]		See Footnote[2]
Steam Driven Auxiliary Feed Pumps	Unmonitored	See Footnote[1]		See Footnote[2]
Containment Equipment Hatch	Unmonitored	See Footnote[1]		See Footnote[2]

1 Since radioactive gaseous waste is not normally vented via this pathway, the determination of release type (i.e., continuous or batch) will be evaluated on a case-by-case basis.

2 Since radioactive gaseous waste is not normally vented via this pathway, the determination of discharge flow rate will be evaluated on a case-by-case basis.

3 Includes sources such as Gland Seal Exhaust.

Attachment 9
Block Diagram of Gaseous Radioactive Waste Systems

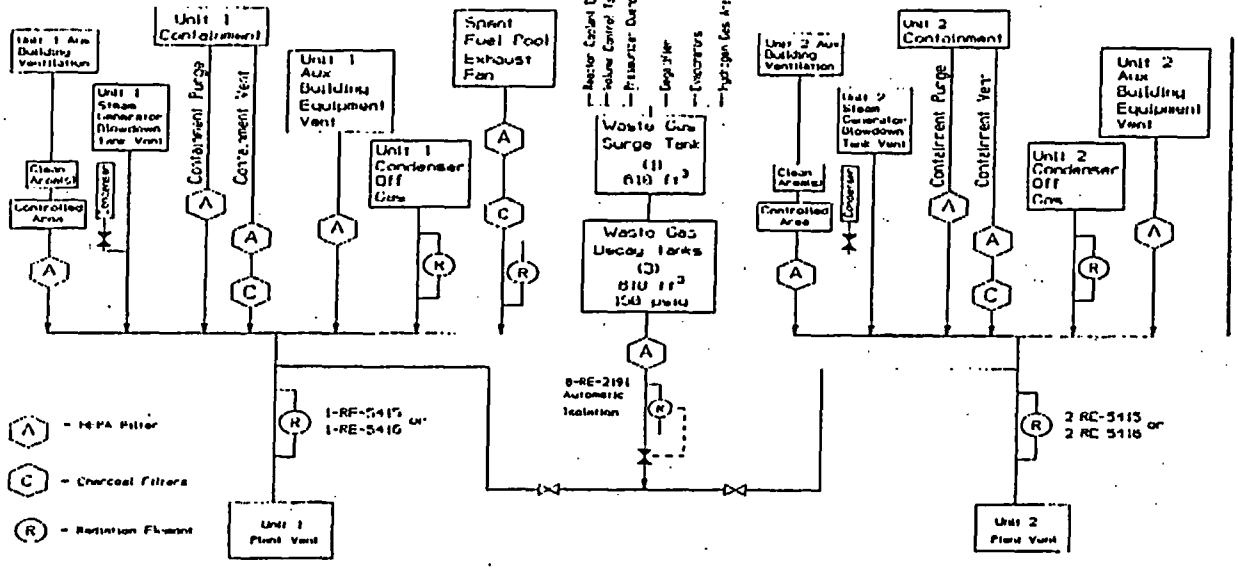

Attachment 10
Noble Gas Dose Factors

NUCLIDE	GAMMA BODY DOSE K_i (mrem/yr)/(µCi/m3)	BETA SKIN DOSE L_i (mrem/yr)/(µCi/m3)	GAMMA AIR DOSE M_i (mrad/yr)/(µCi/m3)	BETA AIR DOSE N_i (mrad/yr)/(µCi/m3)
Ar-41	8.84E+03	2.69E+03	9.30E+03	3.28E+03
Kr-85	1.61E+01	1.34E+03	1.72E+01	1.95E+03
Kr-85m	1.17E+03	1.46E+03	1.23E+03	1.97E+03
Kr-87	5.92E+03	9.73E+03	6.17E+03	1.03E+04
Kr-88	1.47E+04	2.37E+03	1.52E+04	2.93E+03
Xe-131m	9.15E+01	4.76E+02	1.56E+02	1.11E+03
Xe-133	2.94E+02	3.06E+02	3.53E+02	1.05E+03
Xe-133m	2.51E+02	9.94E+02	3.27E+02	1.48E+03
Xe-135	1.81E+03	1.86E+03	1.92E+03	2.46E+03
Xe-135m	3.12E+03	7.11E+02	3.36E+03	7.39E+02
Xe-138	8.83E+03	4.13E+03	9.21E+03	4.75E+03

Attachment 11
Empirical Derivation Of Site-Specific Dose Factors

The total body dose, the skin dose, and the air doses--resulting from gamma and beta emitting radionuclides in discharges of gaseous radwaste--are normally calculated using nuclide specific dose factors. However, these same doses may be estimated using empirically derived, site specific, dose factors as shown below.

TOTAL-BODY, GAMMA-DOSE FACTOR
A site-specific, total-body, gamma-dose factor has been derived from historical data in accordance with the following equation.

$$K_{avg} = \Sigma (K_i)(f_i) \qquad \text{Eq. 1F}$$

K_{avg} = the empirically derived, site-specific, total-body, gamma-dose factor due to all noble gases released during a specified time period

Values of K_{avg} have been calculated using gaseous radwaste discharge data collected over several years.

The results of the calculations appear in the Table on page 5 of this attachment.

K_i = the total body dose factor due to gamma emissions for each identified noble gas radionuclide, i (mrem/yr per microcurie/cubic meter)

The total-body dose factors for gamma rays from noble gas radionuclides were obtained from Regulatory Guide 1.109, Appendix B, Table B-1.

The total-body dose factors for various noble gas radionuclides are tabulated in Attachment 10.

f_i = a fraction which represents the relative activity contribution of noble gas radionuclide i to the total noble gas activity for TYPICAL GASEOUS EFFLUENTS (unitless)

This value has been calculated for all gaseous radwaste discharges for the years 1986, 1987, and 1988 in accordance with equation 3R on Attachment 5.

Attachment 11
Empirical Derivation of Site-Specific Dose Factors

SKIN, BETA-DOSE FACTOR
A site-specific, skin, beta-dose factor has been derived from historical data in accordance with the following equation.

$$L_{avg} = \Sigma (L_i) (f_i) \qquad \text{Eq. 2F}$$

L_{avg} = the empirically derived, site-specific, skin, beta-dose factor due to all noble gases released during a specified time period

Values of L_{avg} have been calculated using gaseous radwaste discharge data collected over several years.

The results of the calculations appear in the Table on page 5 of this attachment.

L_i = the skin dose factor due to beta emissions for each identified noble gas radionuclide, i (mrem/yr per microcurie/cubic meter)

The beta skin dose factors have been obtained from Regulatory Guide 1.109, Appendix B, Table B-1.

The beta skin dose factors for various noble gas radionuclides are tabulated in Attachment 10.

f_i = a fraction which represents the relative activity contribution of noble gas radionuclide i to the total noble gas activity for TYPICAL GASEOUS EFFLUENTS (unitless)

This value has been calculated for all gaseous radwaste discharges for the years 1986, 1987, and 1988 in accordance with equation 3R on Attachment 5.

Attachment 11
Empirical Derivation of Site-Specific Dose Factors

GAMMA-AIR-DOSE FACTOR

A site-specific, gamma-air-dose factor has been derived from historical data in accordance with the following equation.

$$M_{avg} = \Sigma (M_i) (f_i) \qquad \text{Eq. 3F}$$

M_{avg} = the empirically derived, site-specific, gamma-air-dose factor due to all noble gases released during a specified time period

Values of M_{avg} have been calculated using gaseous radwaste discharge data collected over several years.

The results of the calculations appear in the Table on page 5 of this attachment.

M_i = the air dose factor due to gamma emissions for each identified noble gas radionuclide, i (mrad/yr per microcurie/cubic meter)

The gamma air dose factors have been obtained from Regulatory Guide 1.109, Appendix B, Table B-1.

The gamma air dose factors for various noble gas radionuclides are tabulated in Attachment 10.

f_i = a fraction which represents the relative activity contribution of noble gas radionuclide i to the total noble gas activity for TYPICAL GASEOUS EFFLUENTS (unitless)

This value has been calculated for all gaseous radwaste discharges for the years 1986, 1987, and 1988 in accordance with equation 3R on Attachment 5.

Attachment 11
Empirical Derivation of Site-Specific Dose Factors

BETA-AIR-DOSE FACTOR
A site-specific, beta-air-dose factor has been derived from historical data in accordance with the following equation.

$$N_{avg} = \Sigma (N_i) (f_i) \qquad \text{Eq. 4F}$$

N_{avg} = the empirically derived, site-specific, beta-air-dose factor due to all noble gases released during a specified time period

Values of N_{avg} have been calculated using gaseous radwaste discharge data collected over several years.

The results of the calculations appear in the Table on page 5 of this attachment.

N_i = the air dose factor due to beta emissions for each identified noble gas radionuclide, i (mrad/yr per microcurie/cubic meter)

The beta air dose factors have been obtained from Regulatory Guide 1.109, Appendix B, Table B-1.

The beta air dose factors for various noble gas radionuclides are tabulated in Attachment 10 (Attachment 1 of old ODCM).

f_i = a fraction which represents the relative activity contribution of noble gas radionuclide i to the total noble gas activity for TYPICAL GASEOUS EFFLUENTS (unitless)

This value has been calculated for all gaseous radwaste discharges for the years 1986, 1987, and 1988 in accordance with equation 3R on Attachment 5.

Attachment 11
Empirical Derivation of Site-Specific Dose Factors

SITE-SPECIFIC, AVERAGE DOSE FACTORS

Year	K_{avg}	L_{avg}	M_{avg}	N_{avg}
1986	330	790	390	1100
1987	340	810	400	1100
1988	390	960	450	1200
Average	350	850	410	1100
Maximum % difference	11%	13%	10%	9%

As can be seen from the above table, the percent difference between the yearly dose factors and the 3-year average dose factors range from 9% to 13%. This variability is minor considering other areas of uncertainty inherent in the environmental dose calculation models.

It should be noted that the empirically-derived, site-specific, average dose factors listed in the above table shall only rarely be used. In those rare instances where empirically-derived, site-specific, average dose factors are used, the results shall be carefully evaluated by qualified members of the facility staff to ensure the estimated doses are only a small fraction of the Control limits. Additionally, the doses shall be recalculated using the RIGOROUS METHODS prior to submitting the Radioactive Effluent Release Report.

Attachment 12
Gaseous Effluent Pathway Dose Factors

GRASS-COW-MEAT DOSE FACTORS
ADULT
(m2*mrem/yr per uCi/sec)

Nuclide	Bone	Liver	Tbody	Thyroid	Kidney	Lung	Gitract
H-3	0.000E+00	3.250E+02	3.250E+02	3.250E+02	3.250E+02	3.250E+02	3.250E+02
C-14	3.330E+05	6.660E+04	6.660E+04	6.660E+04	6.660E+04	6.660E+04	6.660E+04
NA-24	1.840E-03	1.840E-03	1.840E-03	1.840E-03	1.840E-03	1.840E-03	1.840E-03
P-32	4.650E+09	2.890E+08	1.800E+08	0.000E+00	0.000E+00	0.000E+00	5.230E+08
CR-51	0.000E+00	0.000E+00	7.070E+03	4.220E+03	1.560E+03	9.380E+03	1.780E+06
MN-54	0.000E+00	9.150E+06	1.750E+06	0.000E+00	2.720E+06	0.000E+00	2.800E+07
MN-56	0.000E+00	0.000E+00	0.000E+00	0.000E+00	0.000E+00	0.000E+00	0.000E+00
FE-55	2.930E+08	2.020E+08	4.720E+07	0.000E+00	0.000E+00	1.130E+08	1.160E+08
FE-59	2.670E+08	6.270E+08	2.400E+08	0.000E+00	0.000E+00	1.750E+08	2.090E+09
CO-57	0.000E+00	5.640E+06	9.370E+06	0.000E+00	0.000E+00	0.000E+00	1.430E+08
CO-58	0.000E+00	1.830E+07	4.100E+07	0.000E+00	0.000E+00	0.000E+00	3.700E+08
CO-60	0.000E+00	7.520E+07	1.660E+08	0.000E+00	0.000E+00	0.000E+00	1.410E+09
NI-63	1.890E+10	1.310E+09	6.330E+08	0.000E+00	0.000E+00	0.000E+00	2.730E+08
NI-65	0.000E+00	0.000E+00	0.000E+00	0.000E+00	0.000E+00	0.000E+00	0.000E+00
CU-64	0.000E+00	2.950E-07	1.390E-07	0.000E+00	7.450E-07	0.000E+00	2.520E-05
ZN-65	3.560E+08	1.130E+09	5.120E+08	0.000E+00	7.570E+08	0.000E+00	7.130E+08
ZN-69	0.000E+00	0.000E+00	0.000E+00	0.000E+00	0.000E+00	0.000E+00	0.000E+00
BR-82	0.000E+00	0.000E+00	0.000E+00	0.000E+00	0.000E+00	0.000E+00	0.000E+00
BR-83	0.000E+00	0.000E+00	0.000E+00	0.000E+00	0.000E+00	0.000E+00	0.000E+00
BR-84	0.000E+00	0.000E+00	0.000E+00	0.000E+00	0.000E+00	0.000E+00	0.000E+00
BR-85	0.000E+00	0.000E+00	0.000E+00	0.000E+00	0.000E+00	0.000E+00	0.000E+00
RB-86	0.000E+00	4.870E+08	2.270E+08	0.000E+00	0.000E+00	0.000E+00	9.600E+07
RB-88	0.000E+00	0.000E+00	0.000E+00	0.000E+00	0.000E+00	0.000E+00	0.000E+00
RB-89	0.000E+00	0.000E+00	0.000E+00	0.000E+00	0.000E+00	0.000E+00	0.000E+00
SR-89	3.010E+08	0.000E+00	8.650E+06	0.000E+00	0.000E+00	0.000E+00	4.840E+07
SR-90	1.240E+10	0.000E+00	3.050E+09	0.000E+00	0.000E+00	0.000E+00	3.590E+08
SR-91	0.000E+00	0.000E+00	0.000E+00	0.000E+00	0.000E+00	0.000E+00	1.380E-09
SR-92	0.000E+00	0.000E+00	0.000E+00	0.000E+00	0.000E+00	0.000E+00	0.000E+00
Y-90	1.070E+02	0.000E+00	2.860E+00	0.000E+00	0.000E+00	0.000E+00	1.130E+06
Y-91M	0.000E+00	0.000E+00	0.000E+00	0.000E+00	0.000E+00	0.000E+00	0.000E+00
Y-91	1.130E+06	0.000E+00	3.030E+04	0.000E+00	0.000E+00	0.000E+00	6.240E+08
Y-92	0.000E+00	0.000E+00	0.000E+00	0.000E+00	0.000E+00	0.000E+00	0.000E+00
Y-93	0.000E+00	0.000E+00	0.000E+00	0.000E+00	0.000E+00	0.000E+00	2.080E-07

Attachment 12
Gaseous Effluent Pathway Dose Factors

GRASS-COW-MEAT DOSE FACTORS
ADULT
(m2*mrem/yr per uCi/sec)

Nuclide	Bone	Liver	Tbody	Thyroid	Kidney	Lung	Gitract
ZR-95	1.880E+06	6.040E+05	4.090E+05	0.000E+00	9.480E+05	0.000E+00	1.910E+09
ZR-97	1.830E-05	3.690E-06	1.690E-06	0.000E+00	5.580E-06	0.000E+00	1.140E+00
NB-95	2.290E+06	1.280E+06	6.860E+05	0.000E+00	1.260E+06	0.000E+00	7.750E+09
NB-97	0.000E+00	0.000E+00	0.000E+00	0.000E+00	0.000E+00	0.000E+00	0.000E+00
MO-99	0.000E+00	1.090E+05	2.070E+04	0.000E+00	2.460E+05	0.000E+00	2.520E+05
TC-99M	0.000E+00	0.000E+00	0.000E+00	0.000E+00	0.000E+00	0.000E+00	0.000E+00
TC-101	0.000E+00	0.000E+00	0.000E+00	0.000E+00	0.000E+00	0.000E+00	0.000E+00
RU-103	1.060E+08	0.000E+00	4.550E+07	0.000E+00	4.030E+08	0.000E+00	1.230E+10
RU-105	0.000E+00	0.000E+00	0.000E+00	0.000E+00	0.000E+00	0.000E+00	0.000E+00
RU-106	2.800E+09	0.000E+00	3.540E+08	0.000E+00	5.400E+09	0.000E+00	1.810E+11
RH-103M	0.000E+00	0.000E+00	0.000E+00	0.000E+00	0.000E+00	0.000E+00	0.000E+00
RH-106	0.000E+00	0.000E+00	0.000E+00	0.000E+00	0.000E+00	0.000E+00	0.000E+00
AG-110M	6.690E+06	6.190E+06	3.670E+06	0.000E+00	1.220E+07	0.000E+00	2.520E+09
SB-122	5.580E+03	5.820E+03	7.050E+04	9.250E+02	2.750E+03	1.200E+03	6.930E+05
SB-124	1.980E+09	3.740E+07	7.850E+08	4.800E+06	0.000E+00	1.540E+09	5.620E+10
SB-125	1.910E+09	2.130E+07	4.540E+08	1.940E+06	0.000E+00	1.470E+09	2.100E+10
TE-125M	3.590E+08	1.300E+08	4.810E+07	1.080E+08	1.460E+09	0.000E+00	1.430E+09
TE-127M	1.120E+09	3.990E+08	1.360E+08	2.850E+08	4.530E+09	0.000E+00	3.740E+09
TE-127	0.000E+00	0.000E+00	0.000E+00	0.000E+00	1.090E-09	0.000E+00	2.100E-08
TE-129M	1.140E+09	4.270E+08	1.810E+08	3.930E+08	4.770E+09	0.000E+00	5.760E+09
TE-129	0.000E+00	0.000E+00	0.000E+00	0.000E+00	0.000E+00	0.000E+00	0.000E+00
TE-131M	4.510E+02	2.210E+02	1.840E+02	3.500E+02	2.240E+03	0.000E+00	2.190E+04
TE-131	0.000E+00	0.000E+00	0.000E+00	0.000E+00	0.000E+00	0.000E+00	0.000E+00
TE-132	1.400E+06	9.070E+05	8.510E+05	1.000E+06	8.730E+06	0.000E+00	4.290E+07
I-130	2.350E-06	6.940E-06	2.740E-06	5.880E-04	1.080E-05	0.000E+00	5.980E-06
I-131	1.080E+07	1.540E+07	8.830E+06	5.050E+09	2.640E+07	0.000E+00	4.070E+06
I-132	0.000E+00	0.000E+00	0.000E+00	0.000E+00	0.000E+00	0.000E+00	0.000E+00
I-133	4.300E-01	7.470E-01	2.280E-01	1.100E+02	1.300E+00	0.000E+00	6.720E-01
I-134	0.000E+00	0.000E+00	0.000E+00	0.000E+00	0.000E+00	0.000E+00	0.000E+00
I-135	0.000E+00	0.000E+00	0.000E+00	0.000E+00	0.000E+00	0.000E+00	0.000E+00
CS-134	6.570E+08	1.560E+09	1.280E+09	0.000E+00	5.060E+08	1.680E+08	2.740E+07
CS-136	1.180E+07	4.670E+07	3.360E+07	0.000E+00	2.600E+07	3.560E+06	5.300E+06
CS-137	8.720E+08	1.190E+09	7.810E+08	0.000E+00	4.050E+08	1.350E+08	2.310E+07
CS-138	0.000E+00	0.000E+00	0.000E+00	0.000E+00	0.000E+00	0.000E+00	0.000E+00

Attachment 12
Gaseous Effluent Pathway Dose Factors

GRASS-COW-MEAT DOSE FACTORS
ADULT
(m2*mrem/yr per uCi/sec)

Nuclide	Bone	Liver	Tbody	Thyroid	Kidney	Lung	Gltract
BA-139	0.000E+00	0.000E+00	0.000E+00	0.000E+00	0.000E+00	0.000E+00	0.000E+00
BA-140	2.880E+07	3.610E+04	1.890E+06	0.000E+00	1.230E+04	2.070E+04	5.920E+07
BA-141	0.000E+00	0.000E+00	0.000E+00	0.000E+00	0.000E+00	0.000E+00	0.000E+00
BA-142	0.000E+00	0.000E+00	0.000E+00	0.000E+00	0.000E+00	0.000E+00	0.000E+00
LA-140	3.600E-02	1.810E-02	4.790E-03	0.000E+00	0.000E+00	0.000E+00	1.330E+03
LA-142	0.000E+00	0.000E+00	0.000E+00	0.000E+00	0.000E+00	0.000E+00	0.000E+00
CE-141	1.400E+04	9.480E+03	1.080E+03	0.000E+00	4.400E+03	0.000E+00	3.620E+07
CE-143	2.090E-02	1.550E+01	1.710E-03	0.000E+00	6.800E-03	0.000E+00	5.780E+02
CE-144	1.460E+06	6.090E+05	7.830E+04	0.000E+00	3.610E+05	0.000E+00	4.930E+08
PR-143	2.130E+04	8.540E+03	1.060E+03	0.000E+00	4.930E+03	0.000E+00	9.330E+07
PR-144	0.000E+00	0.000E+00	0.000E+00	0.000E+00	0.000E+00	0.000E+00	0.000E+00
ND-147	7.080E+03	8.180E+03	4.900E+02	0.000E+00	4.780E+03	0.000E+00	3.930E+07
EU-154	8.030E+06	9.870E+08	7.020E+05	0.000E+00	4.720E+06	0.000E+00	7.150E+08
EU-155	1.110E+06	1.580E+05	1.020E+05	0.000E+00	7.300E+05	0.000E+00	1.240E+08
W-187	2.160E-02	1.810E-02	6.320E-03	0.000E+00	0.000E+00	0.000E+00	5.920E+00
NP-239	2.560E-01	2.510E-02	1.390E-02	0.000E+00	7.840E-02	0.000E+00	5.150E+03

Attachment 12
Gaseous Effluent Pathway Dose Factors

GRASS-COW-MEAT DOSE FACTORS
TEEN
(m2*mrem/yr per uCi/sec)

Nuclide	Bone	Liver	Tbody	Thyroid	Kidney	Lung	Gitract
H-3	0.000E+00	1.940E+02	1.940E+02	1.940E+02	1.940E+02	1.940E+02	1.940E+02
C-14	2.810E+05	5.620E+04	5.620E+04	5.620E+04	5.620E+04	5.620E+04	5.620E+04
NA-24	1.470E-03	1.470E-03	1.470E-03	1.470E-03	1.470E-03	1.470E-03	1.470E-03
P-32	3.930E+09	2.440E+08	1.520E+08	0.000E+00	0.000E+00	0.000E+00	3.300E+08
CR-51	0.000E+00	0.000E+00	5.650E+03	3.140E+03	1.240E+03	8.070E+03	9.500E+05
MN-54	0.000E+00	6.980E+06	1.380E+06	0.000E+00	2.080E+06	0.000E+00	1.430E+07
MN-56	0.000E+00	0.000E+00	0.000E+00	0.000E+00	0.000E+00	0.000E+00	0.000E+00
FE-55	2.380E+08	1.690E+08	3.930E+07	0.000E+00	0.000E+00	1.070E+08	7.300E+07
FE-59	2.130E+08	4.980E+08	1.920E+08	0.000E+00	0.000E+00	1.570E+08	1.180E+09
CO-57	0.000E+00	4.530E+06	7.590E+06	0.000E+00	0.000E+00	0.000E+00	8.450E+07
CO-58	0.000E+00	1.410E+07	3.250E+07	0.000E+00	0.000E+00	0.000E+00	1.940E+08
CO-60	0.000E+00	5.830E+07	1.310E+08	0.000E+00	0.000E+00	0.000E+00	7.600E+08
NI-63	1.520E+10	1.070E+09	5.150E+08	0.000E+00	0.000E+00	0.000E+00	1.710E+08
NI-65	0.000E+00	0.000E+00	0.000E+00	0.000E+00	0.000E+00	0.000E+00	0.000E+00
CU-64	0.000E+00	2.410E-07	1.130E-07	0.000E+00	6.100E-07	0.000E+00	1.870E-05
ZN-65	2.500E+08	8.690E+08	4.050E+08	0.000E+00	5.560E+08	0.000E+00	3.680E+08
ZN-69	0.000E+00	0.000E+00	0.000E+00	0.000E+00	0.000E+00	0.000E+00	0.000E+00
BR-82	0.000E+00	0.000E+00	0.000E+00	0.000E+00	0.000E+00	0.000E+00	0.000E+00
BR-83	0.000E+00	0.000E+00	0.000E+00	0.000E+00	0.000E+00	0.000E+00	0.000E+00
BR-84	0.000E+00	0.000E+00	0.000E+00	0.000E+00	0.000E+00	0.000E+00	0.000E+00
BR-85	0.000E+00	0.000E+00	0.000E+00	0.000E+00	0.000E+00	0.000E+00	0.000E+00
RB-86	0.000E+00	4.060E+08	1.910E+08	0.000E+00	0.000E+00	0.000E+00	6.010E+07
RB-88	0.000E+00	0.000E+00	0.000E+00	0.000E+00	0.000E+00	0.000E+00	0.000E+00
RB-89	0.000E+00	0.000E+00	0.000E+00	0.000E+00	0.000E+00	0.000E+00	0.000E+00
SR-89	2.540E+08	0.000E+00	7.290E+06	0.000E+00	0.000E+00	0.000E+00	3.030E+07
SR-90	8.050E+09	0.000E+00	1.990E+09	0.000E+00	0.000E+00	0.000E+00	2.260E+08
SR-91	0.000E+00	0.000E+00	0.000E+00	0.000E+00	0.000E+00	0.000E+00	1.100E-09
SR-92	0.000E+00	0.000E+00	0.000E+00	0.000E+00	0.000E+00	0.000E+00	0.000E+00
Y-90	8.980E+01	0.000E+00	2.420E+00	0.000E+00	0.000E+00	0.000E+00	7.400E+05
Y-91M	0.000E+00	0.000E+00	0.000E+00	0.000E+00	0.000E+00	0.000E+00	0.000E+00
Y-91	9.560E+05	0.000E+00	2.560E+04	0.000E+00	0.000E+00	0.000E+00	3.920E+08
Y-92	0.000E+00	0.000E+00	0.000E+00	0.000E+00	0.000E+00	0.000E+00	0.000E+00
Y-93	0.000E+00	0.000E+00	0.000E+00	0.000E+00	0.000E+00	0.000E+00	1.690E-07

Attachment 12
Gaseous Effluent Pathway Dose Factors

GRASS-COW-MEAT DOSE FACTORS
TEEN
(m2*mrem/yr per uCi/sec)

Nuclide	Bone	Liver	Tbody	Thyroid	Kidney	Lung	Gltract
ZR-95	1.510E+06	4.760E+05	3.270E+05	0.000E+00	6.990E+05	0.000E+00	1.100E+09
ZR-97	1.530E-05	3.020E-06	1.390E-06	0.000E+00	4.580E-06	0.000E+00	8.180E-01
NB-95	1.790E+06	9.940E+05	5.470E+05	0.000E+00	9.640E+05	0.000E+00	4.250E+09
NB-97	0.000E+00	0.000E+00	0.000E+00	0.000E+00	0.000E+00	0.000E+00	0.000E+00
MO-99	0.000E+00	8.980E+04	1.710E+04	0.000E+00	2.060E+05	0.000E+00	1.610E+05
TC-99M	0.000E+00	0.000E+00	0.000E+00	0.000E+00	0.000E+00	0.000E+00	0.000E+00
TC-101	0.000E+00	0.000E+00	0.000E+00	0.000E+00	0.000E+00	0.000E+00	0.000E+00
RU-103	8.600E+07	0.000E+00	3.680E+07	0.000E+00	3.030E+08	0.000E+00	7.180E+09
RU-105	0.000E+00	0.000E+00	0.000E+00	0.000E+00	0.000E+00	0.000E+00	0.000E+00
RU-106	2.360E+09	0.000E+00	2.970E+08	0.000E+00	4.550E+09	0.000E+00	1.130E+11
RH-103M	0.000E+00	0.000E+00	0.000E+00	0.000E+00	0.000E+00	0.000E+00	0.000E+00
RH-106	0.000E+00	0.000E+00	0.000E+00	0.000E+00	0.000E+00	0.000E+00	0.000E+00
AG-110M	5.060E+06	4.790E+06	2.910E+06	0.000E+00	9.140E+06	0.000E+00	1.350E+09
SB-122	3.300E+03	3.440E+03	4.170E+04	5.460E+02	1.620E+03	7.080E+02	4.100E+05
SB-124	1.620E+09	2.980E+07	6.310E+08	3.670E+06	0.000E+00	1.410E+09	3.260E+10
SB-125	1.560E+09	1.710E+07	3.660E+08	1.490E+06	0.000E+00	1.370E+09	1.220E+10
TE-125M	3.030E+08	1.090E+08	4.050E+07	8.470E+07	0.000E+00	0.000E+00	8.940E+08
TE-127M	9.410E+08	3.340E+08	1.120E+08	2.240E+08	3.820E+09	0.000E+00	2.350E+09
TE-127	0.000E+00	0.000E+00	0.000E+00	0.000E+00	0.000E+00	0.000E+00	1.750E-08
TE-129M	9.580E+08	3.560E+08	1.520E+08	3.090E+08	4.010E+09	0.000E+00	3.600E+09
TE-129	0.000E+00	0.000E+00	0.000E+00	0.000E+00	0.000E+00	0.000E+00	0.000E+00
TE-131M	3.760E+02	1.800E+02	1.500E+02	2.710E+02	1.880E+03	0.000E+00	1.450E+04
TE-131	0.000E+00	0.000E+00	0.000E+00	0.000E+00	0.000E+00	0.000E+00	0.000E+00
TE-132	1.150E+06	7.260E+05	6.840E+05	7.660E+05	6.970E+06	0.000E+00	2.300E+07
I-130	1.890E-06	5.480E-06	2.190E-06	4.470E-04	8.440E-06	0.000E+00	4.210E-06
I-131	8.950E+06	1.250E+07	6.730E+06	3.660E+09	2.160E+07	0.000E+00	2.480E+06
I-132	0.000E+00	0.000E+00	0.000E+00	0.000E+00	0.000E+00	0.000E+00	0.000E+00
I-133	3.590E-01	6.100E-01	1.860E-01	8.510E+01	1.070E+00	0.000E+00	4.610E-01
I-134	0.000E+00	0.000E+00	0.000E+00	0.000E+00	0.000E+00	0.000E+00	0.000E+00
I-135	0.000E+00	0.000E+00	0.000E+00	0.000E+00	0.000E+00	0.000E+00	0.000E+00
CS-134	5.230E+08	1.230E+09	5.710E+08	0.000E+00	3.910E+08	1.490E+08	1.530E+07
CS-136	9.220E+06	3.630E+07	2.440E+07	0.000E+00	1.970E+07	3.110E+06	2.920E+06
CS-137	7.240E+08	9.630E+08	3.360E+08	0.000E+00	3.280E+08	1.270E+08	1.370E+07
CS-138	0.000E+00	0.000E+00	0.000E+00	0.000E+00	0.000E+00	0.000E+00	0.000E+00

Attachment 12
Gaseous Effluent Pathway Dose Factors

GRASS-COW-MEAT DOSE FACTORS
TEEN
(m2*mrem/yr per uCi/sec)

Nuclide	Bone	Liver	Tbody	Thyroid	Kidney	Lung	Gitract
BA-139	0.000E+00	0.000E+00	0.000E+00	0.000E+00	0.000E+00	0.000E+00	0.000E+00
BA-140	2.380E+07	2.910E+04	1.530E+06	0.000E+00	9.880E+03	1.960E+04	3.670E+07
BA-141	0.000E+00	0.000E+00	0.000E+00	0.000E+00	0.000E+00	0.000E+00	0.000E+00
BA-142	0.000E+00	0.000E+00	0.000E+00	0.000E+00	0.000E+00	0.000E+00	0.000E+00
LA-140	2.960E-02	1.450E-02	3.870E-03	0.000E+00	0.000E+00	0.000E+00	8.350E+02
LA-142	0.000E+00	0.000E+00	0.000E+00	0.000E+00	0.000E+00	0.000E+00	0.000E+00
CE-141	1.180E+04	7.860E+03	9.030E+02	0.000E+00	3.700E+03	0.000E+00	2.250E+07
CE-143	1.760E-02	1.280E+01	1.430E-03	0.000E+00	5.740E-03	0.000E+00	3.850E+02
CE-144	1.230E+06	5.080E+05	6.600E+04	0.000E+00	3.040E+05	0.000E+00	3.090E+08
PR-143	1.790E+04	7.150E+03	8.920E+02	0.000E+00	4.160E+03	0.000E+00	5.900E+07
PR-144	0.000E+00	0.000E+00	0.000E+00	0.000E+00	0.000E+00	0.000E+00	0.000E+00
ND-147	6.240E+03	6.790E+03	4.060E+02	0.000E+00	3.980E+03	0.000E+00	2.450E+07
EU-154	6.090E+06	7.870E+05	5.540E+05	0.000E+00	3.520E+06	0.000E+00	4.160E+08
EU-155	1.330E+06	1.290E+05	7.970E+04	0.000E+00	5.030E+05	0.000E+00	7.380E+08
W-187	1.810E-02	1.480E-02	5.170E-03	0.000E+00	0.000E+00	0.000E+00	3.990E+00
NP-239	2.230E-01	2.110E-02	1.170E-02	0.000E+00	6.610E-02	0.000E+00	3.390E+03

Attachment 12
Gaseous Effluent Pathway Dose Factors

GRASS-COW-MEAT DOSE FACTORS
CHILD
(m2*mrem/yr per uCi/sec)

Nuclide	Bone	Liver	Tbody	Thyroid	Kidney	Lung	Gitract
H-3	0.000E+00	2.340E+02	2.340E+02	2.340E+02	2.340E+02	2.340E+02	2.340E+02
C-14	5.290E+05	1.060E+05	1.060E+05	1.060E+05	1.060E+05	1.060E+05	1.060E+05
NA-24	2.340E-03	2.340E-03	2.340E-03	2.340E-03	2.340E-03	2.340E-03	2.340E-03
P-32	7.410E+09	3.470E+08	2.860E+08	0.000E+00	0.000E+00	0.000E+00	2.050E+08
CR-51	0.000E+00	0.000E+00	8.810E+03	4.890E+03	1.340E+03	8.930E+03	4.670E+05
MN-54	0.000E+00	7.990E+06	2.130E+06	0.000E+00	2.240E+06	0.000E+00	6.700E+06
MN-56	0.000E+00	0.000E+00	0.000E+00	0.000E+00	0.000E+00	0.000E+00	0.000E+00
FE-55	4.570E+08	2.420E+08	7.510E+07	0.000E+00	0.000E+00	1.370E+08	4.490E+07
FE-59	3.780E+08	6.120E+08	3.050E+08	0.000E+00	0.000E+00	1.770E+08	6.370E+08
CO-57	0.000E+00	5.920E+06	1.200E+07	0.000E+00	0.000E+00	0.000E+00	4.850E+07
CO-58	0.000E+00	1.650E+07	5.040E+07	0.000E+00	0.000E+00	0.000E+00	9.600E+07
CO-60	0.000E+00	6.930E+07	2.040E+08	0.000E+00	0.000E+00	0.000E+00	3.840E+08
NI-63	2.910E+10	1.560E+09	9.910E+08	0.000E+00	0.000E+00	0.000E+00	1.050E+08
NI-65	0.000E+00	0.000E+00	0.000E+00	0.000E+00	0.000E+00	0.000E+00	0.000E+00
CU-64	0.000E+00	3.240E-07	1.960E-07	0.000E+00	7.820E-07	0.000E+00	1.520E-05
ZN-65	3.750E+08	1.000E+09	6.220E+08	0.000E+00	6.300E+08	0.000E+00	1.760E+08
ZN-69	0.000E+00	0.000E+00	0.000E+00	0.000E+00	0.000E+00	0.000E+00	0.000E+00
BR-82	0.000E+00	0.000E+00	0.000E+00	0.000E+00	0.000E+00	0.000E+00	0.000E+00
BR-83	0.000E+00	0.000E+00	0.000E+00	0.000E+00	0.000E+00	0.000E+00	0.000E+00
BR-84	0.000E+00	0.000E+00	0.000E+00	0.000E+00	0.000E+00	0.000E+00	0.000E+00
BR-85	0.000E+00	0.000E+00	0.000E+00	0.000E+00	0.000E+00	0.000E+00	0.000E+00
RB-86	0.000E+00	5.760E+08	3.540E+08	0.000E+00	0.000E+00	0.000E+00	3.710E+07
RB-88	0.000E+00	0.000E+00	0.000E+00	0.000E+00	0.000E+00	0.000E+00	0.000E+00
RB-89	0.000E+00	0.000E+00	0.000E+00	0.000E+00	0.000E+00	0.000E+00	0.000E+00
SR-89	4.820E+08	0.000E+00	1.380E+07	0.000E+00	0.000E+00	0.000E+00	1.860E+07
SR-90	1.040E+10	0.000E+00	2.640E+09	0.000E+00	0.000E+00	0.000E+00	1.400E+08
SR-91	0.000E+00	0.000E+00	0.000E+00	0.000E+00	0.000E+00	0.000E+00	1.010E-09
SR-92	0.000E+00	0.000E+00	0.000E+00	0.000E+00	0.000E+00	0.000E+00	0.000E+00
Y-90	1.700E+02	0.000E+00	4.550E+00	0.000E+00	0.000E+00	0.000E+00	4.840E+05
Y-91M	0.000E+00	0.000E+00	0.000E+00	0.000E+00	0.000E+00	0.000E+00	0.000E+00
Y-91	1.810E+06	0.000E+00	4.830E+04	0.000E+00	0.000E+00	0.000E+00	2.410E+08
Y-92	0.000E+00	0.000E+00	0.000E+00	0.000E+00	0.000E+00	0.000E+00	0.000E+00
Y-93	0.000E+00	0.000E+00	0.000E+00	0.000E+00	0.000E+00	0.000E+00	1.550E-07

Attachment 12
Gaseous Effluent Pathway Dose Factors

GRASS-COW-MEAT DOSE FACTORS
CHILD
(m2*mrem/yr per uCi/sec)

Nuclide	Bone	Liver	Tbody	Thyroid	Kidney	Lung	Gitract
ZR-95	2.680E+06	5.890E+05	5.240E+05	0.000E+00	8.430E+05	0.000E+00	6.140E+08
ZR-97	2.840E-05	4.100E-06	2.420E-06	0.000E+00	5.890E-06	0.000E+00	6.210E-01
NB-95	3.090E+06	1.200E+06	8.610E+05	0.000E+00	1.130E+06	0.000E+00	2.230E+09
NB-97	0.000E+00	0.000E+00	0.000E+00	0.000E+00	0.000E+00	0.000E+00	0.000E+00
MO-99	0.000E+00	1.250E+05	3.090E+04	0.000E+00	2.670E+05	0.000E+00	1.030E+05
TC-99M	0.000E+00	0.000E+00	0.000E+00	0.000E+00	0.000E+00	0.000E+00	0.000E+00
TC-101	0.000E+00	0.000E+00	0.000E+00	0.000E+00	0.000E+00	0.000E+00	0.000E+00
RU-103	1.560E+08	0.000E+00	5.980E+07	0.000E+00	3.920E+08	0.000E+00	4.020E+09
RU-105	0.000E+00	0.000E+00	0.000E+00	0.000E+00	0.000E+00	0.000E+00	0.000E+00
RU-106	4.440E+09	0.000E+00	5.540E+08	0.000E+00	5.990E+09	0.000E+00	6.900E+10
RH-103M	0.000E+00	0.000E+00	0.000E+00	0.000E+00	0.000E+00	0.000E+00	0.000E+00
RH-106	0.000E+00	0.000E+00	0.000E+00	0.000E+00	0.000E+00	0.000E+00	0.000E+00
AG-110M	8.400E+06	5.670E+06	4.530E+06	0.000E+00	1.060E+07	0.000E+00	6.750E+08
SB-122	2.080E+03	2.170E+03	2.630E+04	3.450E+02	1.020E+03	4.460E+02	2.580E+05
SB-124	2.930E+09	3.800E+07	1.030E+09	6.460E+06	0.000E+00	1.620E+09	1.830E+10
SB-125	2.850E+09	2.190E+07	5.960E+08	2.640E+06	0.000E+00	1.590E+09	6.800E+09
TE-125M	5.690E+08	1.540E+08	7.590E+07	1.600E+08	0.000E+00	0.000E+00	5.490E+08
TE-127M	1.770E+09	4.780E+08	2.110E+08	4.240E+08	5.060E+09	0.000E+00	1.440E+09
TE-127	0.000E+00	0.000E+00	0.000E+00	0.000E+00	1.210E-09	0.000E+00	1.660E-08
TE-129M	1.810E+09	5.040E+08	2.800E+08	5.820E+08	5.300E+09	0.000E+00	2.200E+09
TE-129	0.000E+00	0.000E+00	0.000E+00	0.000E+00	0.000E+00	0.000E+00	0.000E+00
TE-131M	7.000E+02	2.420E+02	2.580E+02	4.980E+02	2.340E+03	0.000E+00	9.820E+03
TE-131	0.000E+00	0.000E+00	0.000E+00	0.000E+00	0.000E+00	0.000E+00	0.000E+00
TE-132	2.090E+06	9.270E+05	1.120E+06	1.350E+06	8.600E+06	0.000E+00	9.330E+06
I-130	3.390E-06	6.850E-06	3.530E-06	7.540E-04	1.020E-05	0.000E+00	3.200E-06
I-131	1.660E+07	1.670E+07	9.490E+06	5.520E+09	2.740E+07	0.000E+00	1.490E+06
I-132	0.000E+00	0.000E+00	0.000E+00	0.000E+00	0.000E+00	0.000E+00	0.000E+00
I-133	6.680E-01	8.260E-01	3.120E-01	1.530E+02	1.380E+00	0.000E+00	3.330E-01
I-134	0.000E+00	0.000E+00	0.000E+00	0.000E+00	0.000E+00	0.000E+00	0.000E+00
I-135	0.000E+00	0.000E+00	0.000E+00	0.000E+00	0.000E+00	0.000E+00	0.000E+00
CS-134	9.220E+08	1.510E+09	3.190E+08	0.000E+00	4.690E+08	1.680E+08	8.150E+06
CS-136	1.590E+07	4.370E+07	2.830E+07	0.000E+00	2.330E+07	3.470E+06	1.540E+06
CS-137	1.330E+09	1.280E+09	1.880E+08	0.000E+00	4.160E+08	1.500E+08	7.990E+06
CS-138	0.000E+00	0.000E+00	0.000E+00	0.000E+00	0.000E+00	0.000E+00	0.000E+00

Attachment 12
Gaseous Effluent Pathway Dose Factors

GRASS-COW-MEAT DOSE FACTORS
CHILD
(m2*mrem/yr per uCi/sec)

Nuclide	Bone	Liver	Tbody	Thyroid	Kidney	Lung	Gltract
BA-139	0.000E+00	0.000E+00	0.000E+00	0.000E+00	0.000E+00	0.000E+00	0.000E+00
BA-140	4.390E+07	3.850E+04	2.560E+06	0.000E+00	1.250E+04	2.290E+04	2.220E+07
BA-141	0.000E+00	0.000E+00	0.000E+00	0.000E+00	0.000E+00	0.000E+00	0.000E+00
BA-142	0.000E+00	0.000E+00	0.000E+00	0.000E+00	0.000E+00	0.000E+00	0.000E+00
LA-140	5.410E-02	1.890E-02	6.380E-03	0.000E+00	0.000E+00	0.000E+00	5.270E+02
LA-142	0.000E+00	0.000E+00	0.000E+00	0.000E+00	0.000E+00	0.000E+00	0.000E+00
CE-141	2.220E+04	1.110E+04	1.640E+03	0.000E+00	4.840E+03	0.000E+00	1.380E+07
CE-143	3.300E-02	1.790E+01	2.590E-03	0.000E+00	7.510E-03	0.000E+00	2.620E+02
CE-144	2.320E+06	7.260E+05	1.240E+05	0.000E+00	4.020E+05	0.000E+00	1.890E+08
PR-143	3.390E+04	1.020E+04	1.680E+03	0.000E+00	5.510E+03	0.000E+00	3.660E+07
PR-144	0.000E+00	0.000E+00	0.000E+00	0.000E+00	0.000E+00	0.000E+00	0.000E+00
ND-147	1.170E+04	9.480E+03	7.340E+02	0.000E+00	5.200E+03	0.000E+00	1.500E+07
EU-154	1.120E+07	1.010E+06	9.190E+05	0.000E+00	4.420E+06	0.000E+00	2.340E+08
EU-155	2.330E+06	1.680E+05	1.310E+05	0.000E+00	6.280E+05	0.000E+00	4.200E+08
W-187	3.360E-02	1.990E-02	8.920E-03	0.000E+00	0.000E+00	0.000E+00	2.790E+00
NP-239	4.200E-01	3.020E-02	2.120E-02	0.000E+00	8.730E-02	0.000E+00	2.230E+03

Attachment 12
Gaseous Effluent Pathway Dose Factors

GRASS-COW-MEAT DOSE FACTORS
INFANT
(m2*mrem/yr per uCi/sec)

Nuclide	Bone	Liver	Tbody	Thyroid	Kidney	Lung	Gitract

THIS PATHWAY IS NOT APPLICABLE

TABLE INTENTIONALLY LEFT BLANK

Attachment 12
Gaseous Effluent Pathway Dose Factors

VEGETATION DOSE FACTORS
ADULT
(m2*mrem/yr per uCi/sec)

Nuclide	Bone	Liver	Tbody	Thyroid	Kidney	Lung	GItract
H-3	0.000E+00	2.260E+03	2.260E+03	2.260E+03	2.260E+03	2.260E+03	2.260E+03
C-14	8.970E+05	1.790E+05	1.790E+05	1.790E+05	1.790E+05	1.790E+05	1.790E+05
NA-24	2.760E+05	2.760E+05	2.760E+05	2.760E+05	2.760E+05	2.760E+05	2.760E+05
P-32	1.400E+09	8.730E+07	5.420E+07	0.000E+00	0.000E+00	0.000E+00	1.580E+08
CR-51	0.000E+00	0.000E+00	4.660E+04	2.790E+04	1.030E+04	6.190E+04	1.170E+07
MN-54	0.000E+00	3.110E+08	5.940E+07	0.000E+00	9.270E+07	0.000E+00	9.540E+08
MN-56	0.000E+00	1.610E+01	2.850E+00	0.000E+00	2.040E+01	0.000E+00	5.130E+02
FE-55	2.090E+08	1.450E+08	3.370E+07	0.000E+00	0.000E+00	8.060E+07	8.290E+07
FE-59	1.270E+08	2.990E+08	1.140E+08	0.000E+00	0.000E+00	8.350E+07	9.960E+08
CO-57	0.000E+00	1.170E+07	1.950E+07	0.000E+00	0.000E+00	0.000E+00	2.970E+08
CO-58	0.000E+00	3.090E+07	6.920E+07	0.000E+00	0.000E+00	0.000E+00	6.260E+08
CO-60	0.000E+00	1.670E+08	3.690E+08	0.000E+00	0.000E+00	0.000E+00	3.140E+09
NI-63	1.040E+10	7.210E+08	3.490E+08	0.000E+00	0.000E+00	0.000E+00	1.500E+08
NI-65	6.150E+01	7.990E+00	3.650E+00	0.000E+00	0.000E+00	0.000E+00	2.030E+02
CU-64	0.000E+00	9.270E+03	4.350E+03	0.000E+00	2.340E+04	0.000E+00	7.900E+05
ZN-65	3.170E+08	1.010E+09	4.560E+08	0.000E+00	6.750E+08	0.000E+00	6.360E+08
ZN-69	8.750E-06	1.670E-05	1.160E-06	0.000E+00	1.090E-05	0.000E+00	2.510E-06
BR-82	0.000E+00	0.000E+00	1.510E+06	0.000E+00	0.000E+00	0.000E+00	1.730E+06
BR-83	0.000E+00	0.000E+00	3.210E+00	0.000E+00	0.000E+00	0.000E+00	4.630E+00
BR-84	0.000E+00	0.000E+00	0.000E+00	0.000E+00	0.000E+00	0.000E+00	0.000E+00
BR-85	0.000E+00	0.000E+00	0.000E+00	0.000E+00	0.000E+00	0.000E+00	0.000E+00
RB-86	0.000E+00	2.190E+08	1.020E+08	0.000E+00	0.000E+00	0.000E+00	4.320E+07
RB-88	0.000E+00	0.000E+00	0.000E+00	0.000E+00	0.000E+00	0.000E+00	0.000E+00
RB-89	0.000E+00	0.000E+00	0.000E+00	0.000E+00	0.000E+00	0.000E+00	0.000E+00
SR-89	9.960E+09	0.000E+00	2.860E+08	0.000E+00	0.000E+00	0.000E+00	1.600E+09
SR-90	6.050E+11	0.000E+00	1.480E+11	0.000E+00	0.000E+00	0.000E+00	1.750E+10
SR-91	3.200E+05	0.000E+00	1.290E+04	0.000E+00	0.000E+00	0.000E+00	1.520E+06
SR-92	4.270E+02	0.000E+00	1.850E+01	0.000E+00	0.000E+00	0.000E+00	8.460E+03
Y-90	1.330E+04	0.000E+00	3.560E+02	0.000E+00	0.000E+00	0.000E+00	1.410E+08
Y-91M	5.830E-09	0.000E+00	0.000E+00	0.000E+00	0.000E+00	0.000E+00	1.710E-08
Y-91	5.130E+06	0.000E+00	1.370E+05	0.000E+00	0.000E+00	0.000E+00	2.820E+09
Y-92	9.010E-01	0.000E+00	2.630E-02	0.000E+00	0.000E+00	0.000E+00	1.580E+04
Y-93	1.740E+02	0.000E+00	4.800E+00	0.000E+00	0.000E+00	0.000E+00	5.520E+06

Attachment 12
Gaseous Effluent Pathway Dose Factors

VEGETATION DOSE FACTORS
ADULT
(m2*mrem/yr per uCi/sec)

Nuclide	Bone	Liver	Tbody	Thyroid	Kidney	Lung	Gitract
ZR-95	1.190E+06	3.810E+05	2.580E+05	0.000E+00	5.970E+05	0.000E+00	1.210E+09
ZR-97	3.330E+02	6.730E+01	3.080E+01	0.000E+00	1.020E+02	0.000E+00	2.080E+07
NB-95	1.420E+05	7.910E+04	4.250E+04	0.000E+00	7.810E+04	0.000E+00	4.800E+08
NB-97	2.900E-06	7.340E-07	2.680E-07	0.000E+00	8.560E-07	0.000E+00	2.710E-03
MO-99	0.000E+00	6.250E+06	1.190E+06	0.000E+00	1.410E+07	0.000E+00	1.450E+07
TC-99M	3.060E+00	8.660E+00	1.100E+02	0.000E+00	1.320E+02	4.240E+00	5.120E+03
TC-101	0.000E+00	0.000E+00	0.000E+00	0.000E+00	0.000E+00	0.000E+00	0.000E+00
RU-103	4.800E+06	0.000E+00	2.070E+06	0.000E+00	1.830E+07	0.000E+00	5.610E+08
RU-105	5.390E+01	0.000E+00	2.130E+01	0.000E+00	6.960E+02	0.000E+00	3.300E+04
RU-106	1.930E+08	0.000E+00	2.440E+07	0.000E+00	3.720E+08	0.000E+00	1.250E+10
RH-103M	0.000E+00	0.000E+00	0.000E+00	0.000E+00	0.000E+00	0.000E+00	0.000E+00
RH-106	0.000E+00	0.000E+00	0.000E+00	0.000E+00	0.000E+00	0.000E+00	0.000E+00
AG-110M	1.060E+07	9.760E+06	5.800E+06	0.000E+00	1.920E+07	0.000E+00	3.980E+09
SB-122	7.500E+05	7.820E+05	9.470E+06	1.240E+05	3.690E+05	1.610E+05	9.320E+07
SB-124	1.040E+08	1.960E+06	4.110E+07	2.520E+05	0.000E+00	8.080E+07	2.950E+09
SB-125	1.360E+08	1.520E+06	3.250E+07	1.390E+05	0.000E+00	1.050E+08	1.500E+09
TE-125M	9.660E+07	3.500E+07	1.290E+07	2.900E+07	3.930E+08	0.000E+00	3.860E+08
TE-127M	3.490E+08	1.250E+08	4.260E+07	8.920E+07	1.420E+09	0.000E+00	1.170E+09
TE-127	5.760E+03	2.070E+03	1.250E+03	4.270E+03	2.350E+04	0.000E+00	4.540E+05
TE-129M	2.550E+08	9.500E+07	4.030E+07	8.750E+07	1.060E+09	0.000E+00	1.280E+09
TE-129	6.650E-04	2.500E-04	1.620E-04	5.100E-04	2.790E-03	0.000E+00	5.020E-04
TE-131M	9.120E+05	4.460E+05	3.720E+05	7.060E+05	4.520E+06	0.000E+00	4.430E+07
TE-131	0.000E+00	0.000E+00	0.000E+00	0.000E+00	0.000E+00	0.000E+00	0.000E+00
TE-132	4.290E+06	2.770E+06	2.600E+06	3.060E+06	2.670E+07	0.000E+00	1.310E+08
I-130	3.960E+05	1.170E+06	4.610E+05	9.900E+07	1.820E+06	0.000E+00	1.010E+06
I-131	8.090E+07	1.160E+08	6.630E+07	3.790E+10	1.980E+08	0.000E+00	3.050E+07
I-132	5.740E+01	1.540E+02	5.380E+01	5.380E+03	2.450E+02	0.000E+00	2.890E+01
I-133	2.120E+06	3.690E+06	1.120E+06	5.420E+08	6.440E+06	0.000E+00	3.310E+06
I-134	1.060E-04	2.880E-04	1.030E-04	5.000E-03	4.590E-04	0.000E+00	2.510E-07
I-135	4.080E+04	1.070E+05	3.940E+04	7.040E+06	1.710E+05	0.000E+00	1.210E+05
CS-134	4.660E+09	1.110E+10	9.070E+09	0.000E+00	3.590E+09	1.190E+09	1.940E+08
CS-136	4.200E+07	1.660E+08	1.190E+08	0.000E+00	9.240E+07	1.270E+07	1.890E+07
CS-137	6.360E+09	8.700E+09	5.700E+09	0.000E+00	2.950E+09	9.810E+08	1.680E+08
CS-138	0.000E+00	0.000E+00	0.000E+00	0.000E+00	0.000E+00	0.000E+00	0.000E+00

Attachment 12
Gaseous Effluent Pathway Dose Factors

VEGETATION DOSE FACTORS
ADULT
(m2*mrem/yr per uCi/sec)

Nuclide	Bone	Liver	Tbody	Thyroid	Kidney	Lung	Gitract
BA-139	2.950E-02	2.100E-05	8.640E-04	0.000E+00	1.960E-05	1.190E-05	5.230E-02
BA-140	1.290E+08	1.620E+05	8.430E+06	0.000E+00	5.490E+04	9.250E+04	2.650E+08
BA-141	0.000E+00	0.000E+00	0.000E+00	0.000E+00	0.000E+00	0.000E+00	0.000E+00
BA-142	0.000E+00	0.000E+00	0.000E+00	0.000E+00	0.000E+00	0.000E+00	0.000E+00
LA-140	1.970E+03	9.920E+02	2.620E+02	0.000E+00	0.000E+00	0.000E+00	7.280E+07
LA-142	1.400E-04	6.350E-05	1.580E-05	0.000E+00	0.000E+00	0.000E+00	4.640E-01
CE-141	1.960E+05	1.330E+05	1.510E+04	0.000E+00	6.170E+04	0.000E+00	5.080E+08
CE-143	1.000E+03	7.420E+05	8.210E+01	0.000E+00	3.260E+02	0.000E+00	2.770E+07
CE-144	3.290E+07	1.380E+07	1.770E+06	0.000E+00	8.160E+06	0.000E+00	1.110E+10
PR-143	6.340E+04	2.540E+04	3.140E+03	0.000E+00	1.470E+04	0.000E+00	2.780E+08
PR-144	0.000E+00	0.000E+00	0.000E+00	0.000E+00	0.000E+00	0.000E+00	0.000E+00
ND-147	3.340E+04	3.860E+04	2.310E+03	0.000E+00	2.250E+04	0.000E+00	1.850E+08
EU-154	4.850E+07	5.970E+06	4.250E+06	0.000E+00	2.860E+07	0.000E+00	4.320E+09
EU-155	6.710E+06	9.510E+05	6.140E+05	0.000E+00	4.390E+06	0.000E+00	7.490E+08
W-187	3.820E+04	3.190E+04	1.120E+04	0.000E+00	0.000E+00	0.000E+00	1.050E+07
NP-239	1.420E+03	1.400E+02	7.720E+01	0.000E+00	4.370E+02	0.000E+00	2.870E+07

Attachment 12
Gaseous Effluent Pathway Dose Factors

VEGETATION DOSE FACTORS
TEEN
(m2*mrem/yr per uCi/sec)

Nuclide	Bone	Liver	Tbody	Thyroid	Kidney	Lung	Gitract
H-3	0.000E+00	2.590E+03	2.590E+03	2.590E+03	2.590E+03	2.590E+03	2.590E+03
C-14	1.450E+06	2.910E+05	2.910E+05	2.910E+05	2.910E+05	2.910E+05	2.910E+05
NA-24	2.450E+05	2.450E+05	2.450E+05	2.450E+05	2.450E+05	2.450E+05	2.450E+05
P-32	1.610E+09	9.960E+07	6.230E+07	0.000E+00	0.000E+00	0.000E+00	1.350E+08
CR-51	0.000E+00	0.000E+00	6.200E+04	3.440E+04	1.360E+04	8.850E+04	1.040E+07
MN-54	0.000E+00	4.520E+08	8.970E+07	0.000E+00	1.350E+08	0.000E+00	9.270E+08
MN-56	0.000E+00	1.450E+01	2.580E+00	0.000E+00	1.830E+01	0.000E+00	9.540E+02
FE-55	3.250E+08	2.310E+08	5.380E+07	0.000E+00	0.000E+00	1.460E+08	9.980E+07
FE-59	1.810E+08	4.220E+08	1.630E+08	0.000E+00	0.000E+00	1.330E+08	9.980E+08
CO-57	0.000E+00	1.790E+07	3.000E+07	0.000E+00	0.000E+00	0.000E+00	3.340E+08
CO-58	0.000E+00	4.380E+07	1.010E+08	0.000E+00	0.000E+00	0.000E+00	6.040E+08
CO-60	0.000E+00	2.490E+08	5.600E+08	0.000E+00	0.000E+00	0.000E+00	3.240E+09
NI-63	1.610E+10	1.130E+09	5.450E+08	0.000E+00	0.000E+00	0.000E+00	1.810E+08
NI-65	5.730E+01	7.320E+00	3.330E+00	0.000E+00	0.000E+00	0.000E+00	3.970E+02
CU-64	0.000E+00	8.400E+03	3.950E+03	0.000E+00	2.120E+04	0.000E+00	6.510E+05
ZN-65	4.240E+08	1.470E+09	6.860E+08	0.000E+00	9.410E+08	0.000E+00	6.230E+08
ZN-69	8.190E-06	1.560E-05	1.090E-06	0.000E+00	1.020E-05	0.000E+00	2.880E-05
BR-82	0.000E+00	0.000E+00	1.330E+06	0.000E+00	0.000E+00	0.000E+00	0.000E+00
BR-83	0.000E+00	0.000E+00	3.010E+00	0.000E+00	0.000E+00	0.000E+00	0.000E+00
BR-84	0.000E+00	0.000E+00	0.000E+00	0.000E+00	0.000E+00	0.000E+00	0.000E+00
BR-85	0.000E+00	0.000E+00	0.000E+00	0.000E+00	0.000E+00	0.000E+00	0.000E+00
RB-86	0.000E+00	2.730E+08	1.280E+08	0.000E+00	0.000E+00	0.000E+00	4.050E+07
RB-88	0.000E+00	0.000E+00	0.000E+00	0.000E+00	0.000E+00	0.000E+00	0.000E+00
RB-89	0.000E+00	0.000E+00	0.000E+00	0.000E+00	0.000E+00	0.000E+00	0.000E+00
SR-89	1.510E+10	0.000E+00	4.330E+08	0.000E+00	0.000E+00	0.000E+00	1.800E+09
SR-90	7.510E+11	0.000E+00	1.850E+11	0.000E+00	0.000E+00	0.000E+00	2.110E+10
SR-91	2.990E+05	0.000E+00	1.190E+04	0.000E+00	0.000E+00	0.000E+00	1.360E+06
SR-92	3.970E+02	0.000E+00	1.690E+01	0.000E+00	0.000E+00	0.000E+00	1.010E+04
Y-90	1.240E+04	0.000E+00	3.340E+02	0.000E+00	0.000E+00	0.000E+00	1.020E+08
Y-91M	5.430E-09	0.000E+00	0.000E+00	0.000E+00	0.000E+00	0.000E+00	2.560E-07
Y-91	7.870E+06	0.000E+00	2.110E+05	0.000E+00	0.000E+00	0.000E+00	3.230E+09
Y-92	8.470E-01	0.000E+00	2.450E-02	0.000E+00	0.000E+00	0.000E+00	2.320E+04
Y-93	1.630E+02	0.000E+00	4.470E+00	0.000E+00	0.000E+00	0.000E+00	4.980E+06

Attachment 12
Gaseous Effluent Pathway Dose Factors

VEGETATION DOSE FACTORS
TEEN
(m2*mrem/yr per uCi/sec)

Nuclide	Bone	Liver	Tbody	Thyroid	Kidney	Lung	Gltract
ZR-95	1.740E+06	5.490E+05	3.780E+05	0.000E+00	8.070E+05	0.000E+00	1.270E+09
ZR-97	3.090E+02	6.110E+01	2.810E+01	0.000E+00	9.260E+01	0.000E+00	1.650E+07
NB-95	1.920E+05	1.060E+05	5.860E+04	0.000E+00	1.030E+05	0.000E+00	4.550E+08
NB-97	2.690E-06	6.670E-07	2.440E-07	0.000E+00	7.800E-07	0.000E+00	1.590E-02
MO-99	0.000E+00	5.740E+06	1.090E+06	0.000E+00	1.310E+07	0.000E+00	1.030E+07
TC-99M	2.700E+00	7.540E+00	9.770E+01	0.000E+00	1.120E+02	4.190E+00	4.950E+03
TC-101	0.000E+00	0.000E+00	0.000E+00	0.000E+00	0.000E+00	0.000E+00	0.000E+00
RU-103	6.870E+06	0.000E+00	2.940E+06	0.000E+00	2.420E+07	0.000E+00	5.740E+08
RU-105	5.000E+01	0.000E+00	1.940E+01	0.000E+00	6.310E+02	0.000E+00	4.040E+04
RU-106	3.090E+08	0.000E+00	3.900E+07	0.000E+00	5.970E+08	0.000E+00	1.480E+10
RH-103M	0.000E+00	0.000E+00	0.000E+00	0.000E+00	0.000E+00	0.000E+00	0.000E+00
RH-106	0.000E+00	0.000E+00	0.000E+00	0.000E+00	0.000E+00	0.000E+00	0.000E+00
AG-110M	1.520E+07	1.440E+07	8.740E+06	0.000E+00	2.740E+07	0.000E+00	4.040E+09
SB-122	4.920E+05	5.130E+05	6.220E+06	8.150E+04	2.420E+05	1.060E+05	6.120E+07
SB-124	1.550E+08	2.850E+06	6.030E+07	3.510E+05	0.000E+00	1.350E+08	3.110E+09
SB-125	2.140E+08	2.340E+06	5.000E+07	2.040E+05	0.000E+00	1.880E+08	1.660E+09
TE-125M	1.480E+08	5.340E+07	1.980E+07	4.140E+07	0.000E+00	0.000E+00	4.370E+08
TE-127M	5.510E+08	1.960E+08	6.560E+07	1.310E+08	2.240E+09	0.000E+00	1.370E+09
TE-127	5.430E+03	1.920E+03	1.170E+03	3.740E+03	2.200E+04	0.000E+00	4.190E+05
TE-129M	3.670E+08	1.360E+08	5.810E+07	1.180E+08	1.540E+09	0.000E+00	1.380E+09
TE-129	6.220E-04	2.320E-04	1.510E-04	4.450E-04	2.610E-03	0.000E+00	3.400E-03
TE-131M	8.440E+05	4.050E+05	3.380E+05	6.090E+05	4.220E+06	0.000E+00	3.250E+07
TE-131	0.000E+00	0.000E+00	0.000E+00	0.000E+00	0.000E+00	0.000E+00	0.000E+00
TE-132	3.900E+06	2.470E+06	2.320E+06	2.600E+06	2.370E+07	0.000E+00	7.820E+07
I-130	3.540E+05	1.020E+06	4.090E+05	8.350E+07	1.580E+06	0.000E+00	7.870E+05
I-131	7.700E+07	1.080E+08	5.790E+07	3.140E+10	1.850E+08	0.000E+00	2.130E+07
I-132	5.180E+01	1.360E+02	4.870E+01	4.570E+03	2.140E+02	0.000E+00	5.910E+01
I-133	1.970E+06	3.340E+06	1.020E+06	4.660E+08	5.860E+06	0.000E+00	2.530E+06
I-134	9.590E-05	2.540E-04	9.130E-05	4.240E-03	4.010E-04	0.000E+00	3.350E-06
I-135	3.680E+04	9.480E+04	3.520E+04	6.100E+06	1.500E+05	0.000E+00	1.050E+05
CS-134	7.090E+09	1.670E+10	7.740E+09	0.000E+00	5.300E+09	2.020E+09	2.080E+08
CS-136	4.290E+07	1.690E+08	1.130E+08	0.000E+00	9.190E+07	1.450E+07	1.360E+07
CS-137	1.010E+10	1.350E+10	4.690E+09	0.000E+00	4.590E+09	1.780E+09	1.920E+08
CS-138	0.000E+00	0.000E+00	0.000E+00	0.000E+00	0.000E+00	0.000E+00	0.000E+00

Attachment 12
Gaseous Effluent Pathway Dose Factors

VEGETATION DOSE FACTORS
TEEN
(m2*mrem/yr per uCi/sec)

Nuclide	Bone	Liver	Tbody	Thyroid	Kidney	Lung	Gitract
BA-139	2.770E-02	1.950E-05	8.080E-04	0.000E+00	1.840E-05	1.340E-05	2.470E-01
BA-140	1.380E+08	1.690E+05	8.910E+06	0.000E+00	5.750E+04	1.140E+05	2.130E+08
BA-141	0.000E+00	0.000E+00	0.000E+00	0.000E+00	0.000E+00	0.000E+00	0.000E+00
BA-142	0.000E+00	0.000E+00	0.000E+00	0.000E+00	0.000E+00	0.000E+00	0.000E+00
LA-140	1.800E+03	8.840E+02	2.350E+02	0.000E+00	0.000E+00	0.000E+00	5.080E+07
LA-142	1.280E-04	5.690E-05	1.420E-05	0.000E+00	0.000E+00	0.000E+00	1.730E+00
CE-141	2.820E+05	1.880E+05	2.160E+04	0.000E+00	8.860E+04	0.000E+00	5.380E+08
CE-143	9.370E+02	6.820E+05	7.620E+01	0.000E+00	3.060E+02	0.000E+00	2.050E+07
CE-144	5.270E+07	2.180E+07	2.830E+06	0.000E+00	1.300E+07	0.000E+00	1.330E+10
PR-143	7.120E+04	2.840E+04	3.550E+03	0.000E+00	1.650E+04	0.000E+00	2.340E+08
PR-144	0.000E+00	0.000E+00	0.000E+00	0.000E+00	0.000E+00	0.000E+00	0.000E+00
ND-147	3.630E+04	3.940E+04	2.360E+03	0.000E+00	2.320E+04	0.000E+00	1.420E+08
EU-154	7.060E+07	9.120E+06	6.430E+06	0.000E+00	4.080E+07	0.000E+00	4.820E+09
EU-155	1.540E+07	1.480E+06	9.190E+05	0.000E+00	5.800E+06	0.000E+00	8.510E+09
W-187	3.550E+04	2.900E+04	1.020E+04	0.000E+00	0.000E+00	0.000E+00	7.840E+06
NP-239	1.380E+03	1.300E+02	7.240E+01	0.000E+00	4.090E+02	0.000E+00	2.100E+07

Attachment 12
Gaseous Effluent Pathway Dose Factors

VEGETATION DOSE FACTORS
CHILD
(m2*mrem/yr per uCi/sec)

Nuclide	Bone	Liver	Tbody	Thyroid	Kidney	Lung	Gitract
H-3	0.000E+00	4.010E+03	4.010E+03	4.010E+03	4.010E+03	4.010E+03	4.010E+03
C-14	3.500E+06	7.010E+05	7.010E+05	7.010E+05	7.010E+05	7.010E+05	7.010E+05
NA-24	3.830E+05	3.830E+05	3.830E+05	3.830E+05	3.830E+05	3.830E+05	3.830E+05
P-32	3.370E+09	1.580E+08	1.300E+08	0.000E+00	0.000E+00	0.000E+00	9.300E+07
CR-51	0.000E+00	0.000E+00	1.180E+05	6.540E+04	1.790E+04	1.190E+05	6.250E+06
MN-54	0.000E+00	6.610E+08	1.760E+08	0.000E+00	1.850E+08	0.000E+00	5.550E+08
MN-56	0.000E+00	1.900E+01	4.280E+00	0.000E+00	2.290E+01	0.000E+00	2.750E+03
FE-55	8.000E+08	4.240E+08	1.310E+08	0.000E+00	0.000E+00	2.400E+08	7.860E+07
FE-59	4.010E+08	6.490E+08	3.230E+08	0.000E+00	0.000E+00	1.880E+08	6.760E+08
CO-57	0.000E+00	2.990E+07	6.040E+07	0.000E+00	0.000E+00	0.000E+00	2.450E+08
CO-58	0.000E+00	6.470E+07	1.980E+08	0.000E+00	0.000E+00	0.000E+00	3.770E+08
CO-60	0.000E+00	3.780E+08	1.120E+09	0.000E+00	0.000E+00	0.000E+00	2.100E+09
NI-63	3.950E+10	2.110E+09	1.340E+09	0.000E+00	0.000E+00	0.000E+00	1.420E+08
NI-65	1.050E+02	9.890E+00	5.770E+00	0.000E+00	0.000E+00	0.000E+00	1.210E+03
CU-64	0.000E+00	1.110E+04	6.690E+03	0.000E+00	2.580E+04	0.000E+00	5.200E+05
ZN-65	8.120E+08	2.160E+09	1.350E+09	0.000E+00	1.360E+09	0.000E+00	3.800E+08
ZN-69	1.510E-05	2.180E-05	2.020E-06	0.000E+00	1.320E-05	0.000E+00	1.380E-03
BR-82	0.000E+00	0.000E+00	2.040E+06	0.000E+00	0.000E+00	0.000E+00	0.000E+00
BR-83	0.000E+00	0.000E+00	5.550E+00	0.000E+00	0.000E+00	0.000E+00	0.000E+00
BR-84	0.000E+00	0.000E+00	0.000E+00	0.000E+00	0.000E+00	0.000E+00	0.000E+00
BR-85	0.000E+00	0.000E+00	0.000E+00	0.000E+00	0.000E+00	0.000E+00	0.000E+00
RB-86	0.000E+00	4.520E+08	2.780E+08	0.000E+00	0.000E+00	0.000E+00	2.910E+07
RB-88	0.000E+00	0.000E+00	0.000E+00	0.000E+00	0.000E+00	0.000E+00	0.000E+00
RB-89	0.000E+00	0.000E+00	0.000E+00	0.000E+00	0.000E+00	0.000E+00	0.000E+00
SR-89	3.590E+10	0.000E+00	1.030E+09	0.000E+00	0.000E+00	0.000E+00	1.390E+09
SR-90	1.240E+12	0.000E+00	3.150E+11	0.000E+00	0.000E+00	0.000E+00	1.670E+10
SR-91	5.500E+05	0.000E+00	2.080E+04	0.000E+00	0.000E+00	0.000E+00	1.210E+06
SR-92	7.280E+02	0.000E+00	2.920E+01	0.000E+00	0.000E+00	0.000E+00	1.380E+04
Y-90	2.300E+04	0.000E+00	6.170E+02	0.000E+00	0.000E+00	0.000E+00	6.560E+07
Y-91M	9.940E-09	0.000E+00	0.000E+00	0.000E+00	0.000E+00	0.000E+00	1.950E-05
Y-91	1.870E+07	0.000E+00	5.010E+05	0.000E+00	0.000E+00	0.000E+00	2.490E+09
Y-92	1.560E+00	0.000E+00	4.460E-02	0.000E+00	0.000E+00	0.000E+00	4.510E+04
Y-93	3.010E+02	0.000E+00	8.250E+00	0.000E+00	0.000E+00	0.000E+00	4.480E+06

Attachment 12
Gaseous Effluent Pathway Dose Factors

VEGETATION DOSE FACTORS
CHILD
(m2*mrem/yr per uCi/sec)

Nuclide	Bone	Liver	Tbody	Thyroid	Kidney	Lung	Gitract
ZR-95	3.900E+06	8.580E+05	7.640E+05	0.000E+00	1.230E+06	0.000E+00	8.950E+08
ZR-97	5.640E+02	8.150E+01	4.810E+01	0.000E+00	1.170E+02	0.000E+00	1.230E+07
NB-95	4.100E+05	1.590E+05	1.140E+05	0.000E+00	1.500E+05	0.000E+00	2.950E+08
NB-97	4.900E-06	8.850E-07	4.130E-07	0.000E+00	9.820E-07	0.000E+00	2.730E-01
MO-99	0.000E+00	7.830E+06	1.940E+06	0.000E+00	1.670E+07	0.000E+00	6.480E+06
TC-99M	4.650E+00	9.120E+00	1.510E+02	0.000E+00	1.330E+02	4.630E+00	5.190E+03
TC-101	0.000E+00	0.000E+00	0.000E+00	0.000E+00	0.000E+00	0.000E+00	0.000E+00
RU-103	1.550E+07	0.000E+00	5.940E+06	0.000E+00	3.890E+07	0.000E+00	3.990E+08
RU-105	9.170E+01	0.000E+00	3.330E+01	0.000E+00	8.060E+02	0.000E+00	5.980E+04
RU-106	7.450E+08	0.000E+00	9.300E+07	0.000E+00	1.010E+09	0.000E+00	1.160E+10
RH-103M	0.000E+00	0.000E+00	0.000E+00	0.000E+00	0.000E+00	0.000E+00	0.000E+00
RH-106	0.000E+00	0.000E+00	0.000E+00	0.000E+00	0.000E+00	0.000E+00	0.000E+00
AG-110M	3.220E+07	2.170E+07	1.740E+07	0.000E+00	4.050E+07	0.000E+00	2.580E+09
SB-122	3.050E+05	3.180E+05	3.850E+06	5.050E+04	1.500E+05	6.540E+04	3.790E+07
SB-124	3.520E+08	4.570E+06	1.230E+08	7.780E+05	0.000E+00	1.960E+08	2.200E+09
SB-125	4.990E+08	3.850E+06	1.050E+08	4.620E+05	0.000E+00	2.780E+08	1.190E+09
TE-125M	3.510E+08	9.500E+07	4.670E+07	9.840E+07	0.000E+00	0.000E+00	3.380E+08
TE-127M	1.320E+09	3.560E+08	1.570E+08	3.160E+08	3.770E+09	0.000E+00	1.070E+09
TE-127	1.000E+04	2.700E+03	2.150E+03	6.930E+03	2.850E+04	0.000E+00	3.910E+05
TE-129M	8.540E+08	2.390E+08	1.330E+08	2.750E+08	2.510E+09	0.000E+00	1.040E+09
TE-129	1.150E-03	3.220E-04	2.740E-04	8.220E-04	3.370E-03	0.000E+00	7.170E-02
TE-131M	1.540E+06	5.330E+05	5.680E+05	1.100E+06	5.160E+06	0.000E+00	2.160E+07
TE-131	0.000E+00	0.000E+00	0.000E+00	0.000E+00	0.000E+00	0.000E+00	0.000E+00
TE-132	6.980E+06	3.090E+06	3.730E+06	4.500E+06	2.870E+07	0.000E+00	3.110E+07
I-130	6.210E+05	1.260E+06	6.470E+05	1.380E+08	1.880E+06	0.000E+00	5.870E+05
I-131	1.430E+08	1.440E+08	8.180E+07	4.760E+10	2.360E+08	0.000E+00	1.280E+07
I-132	9.200E+01	1.690E+02	7.770E+01	7.840E+03	2.590E+02	0.000E+00	1.990E+02
I-133	3.590E+06	4.440E+06	1.680E+06	8.250E+08	7.400E+06	0.000E+00	1.790E+06
I-134	1.700E-04	3.160E-04	1.460E-04	7.280E-03	4.840E-04	0.000E+00	2.100E-04
I-135	6.540E+04	1.180E+05	5.570E+04	1.040E+07	1.810E+05	0.000E+00	8.980E+04
CS-134	1.600E+10	2.630E+10	5.540E+09	0.000E+00	8.140E+09	2.920E+09	1.420E+08
CS-136	8.060E+07	2.220E+08	1.430E+08	0.000E+00	1.180E+08	1.760E+07	7.790E+06
CS-137	2.390E+10	2.290E+10	3.380E+09	0.000E+00	7.460E+09	2.680E+09	1.430E+08
CS-138	0.000E+00	0.000E+00	0.000E+00	0.000E+00	0.000E+00	0.000E+00	0.000E+00

Attachment 12
Gaseous Effluent Pathway Dose Factors

VEGETATION DOSE FACTORS
CHILD
(m2*mrem/yr per uCi/sec)

Nuclide	Bone	Liver	Tbody	Thyroid	Kidney	Lung	Gitract
BA-139	5.110E-02	2.730E-05	1.480E-03	0.000E+00	2.380E-05	1.610E-05	2.950E+00
BA-140	2.770E+08	2.430E+05	1.620E+07	0.000E+00	7.900E+04	1.450E+05	1.400E+08
BA-141	0.000E+00	0.000E+00	0.000E+00	0.000E+00	0.000E+00	0.000E+00	0.000E+00
BA-142	0.000E+00	0.000E+00	0.000E+00	0.000E+00	0.000E+00	0.000E+00	0.000E+00
LA-140	3.230E+03	1.130E+03	3.810E+02	0.000E+00	0.000E+00	0.000E+00	3.150E+07
LA-142	2.320E-04	7.400E-05	2.320E-05	0.000E+00	0.000E+00	0.000E+00	1.470E+01
CE-141	6.350E+05	3.260E+05	4.840E+04	0.000E+00	1.430E+05	0.000E+00	4.070E+08
CE-143	1.730E+03	9.360E+05	1.360E+02	0.000E+00	3.930E+02	0.000E+00	1.370E+07
CE-144	1.270E+08	3.980E+07	6.780E+06	0.000E+00	2.210E+07	0.000E+00	1.040E+10
PR-143	1.480E+05	4.460E+04	7.370E+03	0.000E+00	2.410E+04	0.000E+00	1.600E+08
PR-144	0.000E+00	0.000E+00	0.000E+00	0.000E+00	0.000E+00	0.000E+00	0.000E+00
ND-147	7.160E+04	5.800E+04	4.490E+03	0.000E+00	3.180E+04	0.000E+00	9.180E+07
EU-154	1.660E+08	1.500E+07	1.370E+07	0.000E+00	6.570E+07	0.000E+00	3.480E+09
EU-155	3.440E+07	2.480E+06	1.940E+06	0.000E+00	9.280E+06	0.000E+00	6.200E+09
W-187	6.470E+04	3.830E+04	1.720E+04	0.000E+00	0.000E+00	0.000E+00	5.380E+06
NP-239	2.550E+03	1.830E+02	1.290E+02	0.000E+00	5.300E+02	0.000E+00	1.360E+07

Attachment 12
Gaseous Effluent Pathway Dose Factors

VEGETATION DOSE FACTORS
INFANT
(m2*mrem/yr per uCi/sec)

Nuclide	Bone	Liver	Tbody	Thyroid	Kidney	Lung	Gitract

THIS PATHWAY IS NOT APPLICABLE

TABLE INTENTIONALLY LEFT BLANK

Attachment 12
Gaseous Effluent Pathway Dose Factors

GROUND PLANE DOSE FACTORS
ADULT
(m2*mrem/yr per uCi/sec)

Nuclide	Bone	Liver	Tbody	Thyroid	Kidney	Lung	Gltract

THIS PATHWAY IS NOT APPLICABLE

TABLE INTENTIONALLY LEFT BLANK

Attachment 12
Gaseous Effluent Pathway Dose Factors

GROUND PLANE DOSE FACTORS
TEEN
(m2*mrem/yr per uCi/sec)

Nuclide	Bone	Liver	Tbody	Thyroid	Kidney	Lung	Gitract
H-3	0.000E+00	0.000E+00	0.000E+00	0.000E+00	0.000E+00	0.000E+00	0.000E+00
C-14	0.000E+00	0.000E+00	0.000E+00	0.000E+00	0.000E+00	0.000E+00	0.000E+00
NA-24	1.210E+07	1.210E+07	1.210E+07	1.210E+07	1.210E+07	1.210E+07	1.210E+07
P-32	0.000E+00	0.000E+00	0.000E+00	0.000E+00	0.000E+00	0.000E+00	0.000E+00
CR-51	4.680E+06	4.680E+06	4.680E+06	4.680E+06	4.680E+06	4.680E+06	4.680E+06
MN-54	1.340E+09	1.340E+09	1.340E+09	1.340E+09	1.340E+09	1.340E+09	1.340E+09
MN-56	9.050E+05	9.050E+05	9.050E+05	9.050E+05	9.050E+05	9.050E+05	9.050E+05
FE-55	0.000E+00	0.000E+00	0.000E+00	0.000E+00	0.000E+00	0.000E+00	0.000E+00
FE-59	2.750E+08	2.750E+08	2.750E+08	2.750E+08	2.750E+08	2.750E+08	2.750E+08
CO-58	3.820E+08	3.820E+08	3.820E+08	3.820E+08	3.820E+08	3.820E+08	3.820E+08
CO-60	2.160E+10	2.160E+10	2.160E+10	2.160E+10	2.160E+10	2.160E+10	2.160E+10
NI-63	0.000E+00	0.000E+00	0.000E+00	0.000E+00	0.000E+00	0.000E+00	0.000E+00
NI-65	2.970E+05	2.970E+05	2.970E+05	2.970E+05	2.970E+05	2.970E+05	2.970E+05
CU-64	6.090E+05	6.090E+05	6.090E+05	6.090E+05	6.090E+05	6.090E+05	6.090E+05
ZN-65	7.450E+08	7.450E+08	7.450E+08	7.450E+08	7.450E+08	7.450E+08	7.450E+08
ZN-69	0.000E+00	0.000E+00	0.000E+00	0.000E+00	0.000E+00	0.000E+00	0.000E+00
BR-83	4.890E+03	4.890E+03	4.890E+03	4.890E+03	4.890E+03	4.890E+03	4.890E+03
BR-84	2.030E+05	2.030E+05	2.030E+05	2.030E+05	2.030E+05	2.030E+05	2.030E+05
BR-85	0.000E+00	0.000E+00	0.000E+00	0.000E+00	0.000E+00	0.000E+00	0.000E+00
RB-86	8.980E+06	8.980E+06	8.980E+06	8.980E+06	8.980E+06	8.980E+06	8.980E+06
RB-88	3.290E+04	3.290E+04	3.290E+04	3.290E+04	3.290E+04	3.290E+04	3.290E+04
RB-89	1.210E+05	1.210E+05	1.210E+05	1.210E+05	1.210E+05	1.210E+05	1.210E+05
SR-89	2.160E+04	2.160E+04	2.160E+04	2.160E+04	2.160E+04	2.160E+04	2.160E+04
SR-90	0.000E+00	0.000E+00	0.000E+00	0.000E+00	0.000E+00	0.000E+00	0.000E+00
SR-91	2.190E+06	2.190E+06	2.190E+06	2.190E+06	2.190E+06	2.190E+06	2.190E+06
SR-92	7.770E+05	7.770E+05	7.770E+05	7.770E+05	7.770E+05	7.770E+05	7.770E+05
Y-90	4.480E+03	4.480E+03	4.480E+03	4.480E+03	4.480E+03	4.480E+03	4.480E+03
Y-91M	1.010E+05	1.010E+05	1.010E+05	1.010E+05	1.010E+05	1.010E+05	1.010E+05
Y-91	1.080E+06	1.080E+06	1.080E+06	1.080E+06	1.080E+06	1.080E+06	1.080E+06
Y-92	1.800E+05	1.800E+05	1.800E+05	1.800E+05	1.800E+05	1.800E+05	1.800E+05
Y-93	1.850E+05	1.850E+05	1.850E+05	1.850E+05	1.850E+05	1.850E+05	1.850E+05
ZR-95	2.480E+08	2.480E+08	2.480E+08	2.480E+08	2.480E+08	2.480E+08	2.480E+08
ZR-97	2.940E+06	2.940E+06	2.940E+06	2.940E+06	2.940E+06	2.940E+06	2.940E+06
NB-95	1.360E+08	1.360E+08	1.360E+08	1.360E+08	1.360E+08	1.360E+08	1.360E+08

Attachment 12
Gaseous Effluent Pathway Dose Factors

GROUND PLANE DOSE FACTORS
TEEN
(m2*mrem/yr per uCi/sec)

Nuclide	Bone	Liver	Tbody	Thyroid	Kidney	Lung	Gitract
MO-99	4.050E+06	4.050E+06	4.050E+06	4.050E+06	4.050E+06	4.050E+06	4.050E+06
TC-99M	1.830E+05	1.830E+05	1.830E+05	1.830E+05	1.830E+05	1.830E+05	1.830E+05
TC-101	2.040E+04	2.040E+04	2.040E+04	2.040E+04	2.040E+04	2.040E+04	2.040E+04
RU-103	1.090E+08	1.090E+08	1.090E+08	1.090E+08	1.090E+08	1.090E+08	1.090E+08
RU-105	6.360E+05	6.360E+05	6.360E+05	6.360E+05	6.360E+05	6.360E+05	6.360E+05
RU-106	4.210E+08	4.210E+08	4.210E+08	4.210E+08	4.210E+08	4.210E+08	4.210E+08
RH-103M	0.000E+00	0.000E+00	0.000E+00	0.000E+00	0.000E+00	0.000E+00	0.000E+00
RH-106	0.000E+00	0.000E+00	0.000E+00	0.000E+00	0.000E+00	0.000E+00	0.000E+00
AG-110M	3.470E+09	3.470E+09	3.470E+09	3.470E+09	3.470E+09	3.470E+09	3.470E+09
SB-122	1.070E+07	1.070E+07	1.070E+07	1.070E+07	1.070E+07	1.070E+07	1.070E+07
TE-125M	1.550E+06	1.550E+06	1.550E+06	1.550E+06	1.550E+06	1.550E+06	1.550E+06
TE-127M	9.170E+04	9.170E+04	9.170E+04	9.170E+04	9.170E+04	9.170E+04	9.170E+04
TE-127	3.000E+03	3.000E+03	3.000E+03	3.000E+03	3.000E+03	3.000E+03	3.000E+03
TE-129M	2.000E+07	2.000E+07	2.000E+07	2.000E+07	2.000E+07	2.000E+07	2.000E+07
TE-129	2.600E+04	2.600E+04	2.600E+04	2.600E+04	2.600E+04	2.600E+04	2.600E+04
TE-131M	8.030E+06	8.030E+06	8.030E+06	8.030E+06	8.030E+06	8.030E+06	8.030E+06
TE-131	2.930E+04	2.930E+04	2.930E+04	2.930E+04	2.930E+04	2.930E+04	2.930E+04
TE-132	4.220E+06	4.220E+06	4.220E+06	4.220E+06	4.220E+06	4.220E+06	4.220E+06
I-130	5.530E+06	5.530E+06	5.530E+06	5.530E+06	5.530E+06	5.530E+06	5.530E+06
I-131	1.720E+07	1.720E+07	1.720E+07	1.720E+07	1.720E+07	1.720E+07	1.720E+07
I-132	1.240E+06	1.240E+06	1.240E+06	1.240E+06	1.240E+06	1.240E+06	1.240E+06
I-133	2.470E+06	2.470E+06	2.470E+06	2.470E+06	2.470E+06	2.470E+06	2.470E+06
I-134	4.490E+05	4.490E+05	4.490E+05	4.490E+05	4.490E+05	4.490E+05	4.490E+05
I-135	2.560E+06	2.560E+06	2.560E+06	2.560E+06	2.560E+06	2.560E+06	2.560E+06
CS-134	6.750E+09	6.750E+09	6.750E+09	6.750E+09	6.750E+09	6.750E+09	6.750E+09
CS-136	1.490E+08	1.490E+08	1.490E+08	1.490E+08	1.490E+08	1.490E+08	1.490E+08
CS-137	1.040E+10	1.040E+10	1.040E+10	1.040E+10	1.040E+10	1.040E+10	1.040E+10
CS-138	3.590E+05	3.590E+05	3.590E+05	3.590E+05	3.590E+05	3.590E+05	3.590E+05
BA-139	1.060E+05	1.060E+05	1.060E+05	1.060E+05	1.060E+05	1.060E+05	1.060E+05
BA-140	2.050E+07	2.050E+07	2.050E+07	2.050E+07	2.050E+07	2.050E+07	2.050E+07
BA-141	4.180E+04	4.180E+04	4.180E+04	4.180E+04	4.180E+04	4.180E+04	4.180E+04
BA-142	4.490E+04	4.490E+04	4.490E+04	4.490E+04	4.490E+04	4.490E+04	4.490E+04

Attachment 12
Gaseous Effluent Pathway Dose Factors

GROUND PLANE DOSE FACTORS
TEEN
(m2*mrem/yr per uCi/sec)

Nuclide	Bone	Liver	Tbody	Thyroid	Kidney	Lung	Gltract
LA-140	1.910E+07	1.910E+07	1.910E+07	1.910E+07	1.910E+07	1.910E+07	1.910E+07
LA-142	7.360E+05	7.360E+05	7.360E+05	7.360E+05	7.360E+05	7.360E+05	7.360E+05
CE-141	1.360E+07	1.360E+07	1.360E+07	1.360E+07	1.360E+07	1.360E+07	1.360E+07
CE-143	2.320E+06	2.320E+06	2.320E+06	2.320E+06	2.320E+06	2.320E+06	2.320E+06
CE-144	6.950E+07	6.950E+07	6.950E+07	6.950E+07	6.950E+07	6.950E+07	6.950E+07
PR-143	0.000E+00	0.000E+00	0.000E+00	0.000E+00	0.000E+00	0.000E+00	0.000E+00
PR-144	1.830E+03	1.830E+03	1.830E+03	1.830E+03	1.830E+03	1.830E+03	1.830E+03
ND-147	8.400E+06	8.400E+06	8.400E+06	8.400E+06	8.400E+06	8.400E+06	8.400E+06
EU-154	2.700E+10	2.700E+10	2.700E+10	2.700E+10	2.700E+10	2.700E+10	2.700E+10
EU-155	9.570E+08	9.570E+08	9.570E+08	9.570E+08	9.570E+08	9.570E+08	9.570E+08
W-187	2.360E+06	2.360E+06	2.360E+06	2.360E+06	2.360E+06	2.360E+06	2.360E+06
NP-239	1.710E+06	1.710E+06	1.710E+06	1.710E+06	1.710E+06	1.710E+06	1.710E+06

Attachment 12
Gaseous Effluent Pathway Dose Factors

GROUND PLANE DOSE FACTORS
CHILD
(m2*mrem/yr per uCi/sec)

Nuclide	Bone	Liver	Tbody	Thyroid	Kidney	Lung	Gltract
H-3	0.000E+00	0.000E+00	0.000E+00	0.000E+00	0.000E+00	0.000E+00	0.000E+00
C-14	0.000E+00	0.000E+00	0.000E+00	0.000E+00	0.000E+00	0.000E+00	0.000E+00
NA-24	1.210E+07	1.210E+07	1.210E+07	1.210E+07	1.210E+07	1.210E+07	1.210E+07
P-32	0.000E+00	0.000E+00	0.000E+00	0.000E+00	0.000E+00	0.000E+00	0.000E+00
CR-51	4.680E+06	4.680E+06	4.680E+06	4.680E+06	4.680E+06	4.680E+06	4.680E+06
MN-54	1.340E+09	1.340E+09	1.340E+09	1.340E+09	1.340E+09	1.340E+09	1.340E+09
MN-56	9.050E+05	9.050E+05	9.050E+05	9.050E+05	9.050E+05	9.050E+05	9.050E+05
FE-55	0.000E+00	0.000E+00	0.000E+00	0.000E+00	0.000E+00	0.000E+00	0.000E+00
FE-59	2.750E+08	2.750E+08	2.750E+08	2.750E+08	2.750E+08	2.750E+08	2.750E+08
CO-58	3.820E+08	3.820E+08	3.820E+08	3.820E+08	3.820E+08	3.820E+08	3.820E+08
CO-60	2.160E+10	2.160E+10	2.160E+10	2.160E+10	2.160E+10	2.160E+10	2.160E+10
NI-63	0.000E+00	0.000E+00	0.000E+00	0.000E+00	0.000E+00	0.000E+00	0.000E+00
NI-65	2.970E+05	2.970E+05	2.970E+05	2.970E+05	2.970E+05	2.970E+05	2.970E+05
CU-64	6.090E+05	6.090E+05	6.090E+05	6.090E+05	6.090E+05	6.090E+05	6.090E+05
ZN-65	7.450E+08	7.450E+08	7.450E+08	7.450E+08	7.450E+08	7.450E+08	7.450E+08
ZN-69	0.000E+00	0.000E+00	0.000E+00	0.000E+00	0.000E+00	0.000E+00	0.000E+00
BR-83	4.890E+03	4.890E+03	4.890E+03	4.890E+03	4.890E+03	4.890E+03	4.890E+03
BR-84	2.030E+05	2.030E+05	2.030E+05	2.030E+05	2.030E+05	2.030E+05	2.030E+05
BR-85	0.000E+00	0.000E+00	0.000E+00	0.000E+00	0.000E+00	0.000E+00	0.000E+00
RB-86	8.980E+06	8.980E+06	8.980E+06	8.980E+06	8.980E+06	8.980E+06	8.980E+06
RB-88	3.290E+04	3.290E+04	3.290E+04	3.290E+04	3.290E+04	3.290E+04	3.290E+04
RB-89	1.210E+05	1.210E+05	1.210E+05	1.210E+05	1.210E+05	1.210E+05	1.210E+05
SR-89	2.160E+04	2.160E+04	2.160E+04	2.160E+04	2.160E+04	2.160E+04	2.160E+04
SR-90	0.000E+00	0.000E+00	0.000E+00	0.000E+00	0.000E+00	0.000E+00	0.000E+00
SR-91	2.190E+06	2.190E+06	2.190E+06	2.190E+06	2.190E+06	2.190E+06	2.190E+06
SR-92	7.770E+05	7.770E+05	7.770E+05	7.770E+05	7.770E+05	7.770E+05	7.770E+05
Y-90	4.480E+03	4.480E+03	4.480E+03	4.480E+03	4.480E+03	4.480E+03	4.480E+03
Y-91M	1.010E+05	1.010E+05	1.010E+05	1.010E+05	1.010E+05	1.010E+05	1.010E+05
Y-91	1.080E+06	1.080E+06	1.080E+06	1.080E+06	1.080E+06	1.080E+06	1.080E+06
Y-92	1.800E+05	1.800E+05	1.800E+05	1.800E+05	1.800E+05	1.800E+05	1.800E+05
Y-93	1.850E+05	1.850E+05	1.850E+05	1.850E+05	1.850E+05	1.850E+05	1.850E+05
ZR-95	2.480E+08	2.480E+08	2.480E+08	2.480E+08	2.480E+08	2.480E+08	2.480E+08
ZR-97	2.940E+06	2.940E+06	2.940E+06	2.940E+06	2.940E+06	2.940E+06	2.940E+06
NB-95	1.360E+08	1.360E+08	1.360E+08	1.360E+08	1.360E+08	1.360E+08	1.360E+08

Attachment 12
Gaseous Effluent Pathway Dose Factors

GROUND PLANE DOSE FACTORS
CHILD
(m2*mrem/yr per uCi/sec)

Nuclide	Bone	Liver	Tbody	Thyroid	Kidney	Lung	Gitract
MO-99	4.050E+06	4.050E+06	4.050E+06	4.050E+06	4.050E+06	4.050E+06	4.050E+06
TC-99M	1.830E+05	1.830E+05	1.830E+05	1.830E+05	1.830E+05	1.830E+05	1.830E+05
TC-101	2.040E+04	2.040E+04	2.040E+04	2.040E+04	2.040E+04	2.040E+04	2.040E+04
RU-103	1.090E+08	1.090E+08	1.090E+08	1.090E+08	1.090E+08	1.090E+08	1.090E+08
RU-105	6.360E+05	6.360E+05	6.360E+05	6.360E+05	6.360E+05	6.360E+05	6.360E+05
RU-106	4.210E+08	4.210E+08	4.210E+08	4.210E+08	4.210E+08	4.210E+08	4.210E+08
RH-103M	0.000E+00	0.000E+00	0.000E+00	0.000E+00	0.000E+00	0.000E+00	0.000E+00
RH-106	0.000E+00	0.000E+00	0.000E+00	0.000E+00	0.000E+00	0.000E+00	0.000E+00
AG-110M	3.470E+09	3.470E+09	3.470E+09	3.470E+09	3.470E+09	3.470E+09	3.470E+09
SB-122	1.070E+07	1.070E+07	1.070E+07	1.070E+07	1.070E+07	1.070E+07	1.070E+07
TE-125M	1.550E+06	1.550E+06	1.550E+06	1.550E+06	1.550E+06	1.550E+06	1.550E+06
TE-127M	9.170E+04	9.170E+04	9.170E+04	9.170E+04	9.170E+04	9.170E+04	9.170E+04
TE-127	3.000E+03	3.000E+03	3.000E+03	3.000E+03	3.000E+03	3.000E+03	3.000E+03
TE-129M	2.000E+07	2.000E+07	2.000E+07	2.000E+07	2.000E+07	2.000E+07	2.000E+07
TE-129	2.600E+04	2.600E+04	2.600E+04	2.600E+04	2.600E+04	2.600E+04	2.600E+04
TE-131M	8.030E+06	8.030E+06	8.030E+06	8.030E+06	8.030E+06	8.030E+06	8.030E+06
TE-131	2.930E+04	2.930E+04	2.930E+04	2.930E+04	2.930E+04	2.930E+04	2.930E+04
TE-132	4.220E+06	4.220E+06	4.220E+06	4.220E+06	4.220E+06	4.220E+06	4.220E+06
I-130	5.530E+06	5.530E+06	5.530E+06	5.530E+06	5.530E+06	5.530E+06	5.530E+06
I-131	1.720E+07	1.720E+07	1.720E+07	1.720E+07	1.720E+07	1.720E+07	1.720E+07
I-132	1.240E+06	1.240E+06	1.240E+06	1.240E+06	1.240E+06	1.240E+06	1.240E+06
I-133	2.470E+06	2.470E+06	2.470E+06	2.470E+06	2.470E+06	2.470E+06	2.470E+06
I-134	4.490E+05	4.490E+05	4.490E+05	4.490E+05	4.490E+05	4.490E+05	4.490E+05
I-135	2.560E+06	2.560E+06	2.560E+06	2.560E+06	2.560E+06	2.560E+06	2.560E+06
CS-134	6.750E+09	6.750E+09	6.750E+09	6.750E+09	6.750E+09	6.750E+09	6.750E+09
CS-136	1.490E+08	1.490E+08	1.490E+08	1.490E+08	1.490E+08	1.490E+08	1.490E+08
CS-137	1.040E+10	1.040E+10	1.040E+10	1.040E+10	1.040E+10	1.040E+10	1.040E+10
CS-138	3.590E+05	3.590E+05	3.590E+05	3.590E+05	3.590E+05	3.590E+05	3.590E+05
BA-139	1.060E+05	1.060E+05	1.060E+05	1.060E+05	1.060E+05	1.060E+05	1.060E+05
BA-140	2.050E+07	2.050E+07	2.050E+07	2.050E+07	2.050E+07	2.050E+07	2.050E+07
BA-141	4.180E+04	4.180E+04	4.180E+04	4.180E+04	4.180E+04	4.180E+04	4.180E+04
BA-142	4.490E+04	4.490E+04	4.490E+04	4.490E+04	4.490E+04	4.490E+04	4.490E+04
LA-140	1.910E+07	1.910E+07	1.910E+07	1.910E+07	1.910E+07	1.910E+07	1.910E+07
LA-142	7.360E+05	7.360E+05	7.360E+05	7.360E+05	7.360E+05	7.360E+05	7.360E+05

Attachment 12
Gaseous Effluent Pathway Dose Factors

GROUND PLANE DOSE FACTORS
CHILD
(m2*mrem/yr per uCi/sec)

Nuclide	Bone	Liver	Tbody	Thyroid	Kidney	Lung	Gitract
CE-141	1.360E+07	1.360E+07	1.360E+07	1.360E+07	1.360E+07	1.360E+07	1.360E+07
CE-143	2.320E+06	2.320E+06	2.320E+06	2.320E+06	2.320E+06	2.320E+06	2.320E+06
CE-144	6.950E+07	6.950E+07	6.950E+07	6.950E+07	6.950E+07	6.950E+07	6.950E+07
PR-143	0.000E+00	0.000E+00	0.000E+00	0.000E+00	0.000E+00	0.000E+00	0.000E+00
PR-144	1.830E+03	1.830E+03	1.830E+03	1.830E+03	1.830E+03	1.830E+03	1.830E+03
ND-147	8.400E+06	8.400E+06	8.400E+06	8.400E+06	8.400E+06	8.400E+06	8.400E+06
EU-154	2.700E+10	2.700E+10	2.700E+10	2.700E+10	2.700E+10	2.700E+10	2.700E+10
EU-155	9.570E+08	9.570E+08	9.570E+08	9.570E+08	9.570E+08	9.570E+08	9.570E+08
W-187	2.360E+06	2.360E+06	2.360E+06	2.360E+06	2.360E+06	2.360E+06	2.360E+06
NP-239	1.710E+06	1.710E+06	1.710E+06	1.710E+06	1.710E+06	1.710E+06	1.710E+06

Attachment 12
Gaseous Effluent Pathway Dose Factors

GROUND PLANE DOSE FACTORS
INFANT
(m2*mrem/yr per uCi/sec)

Nuclide	Bone	Liver	Tbody	Thyroid	Kidney	Lung	Gitract
H-3	0.000E+00	0.000E+00	0.000E+00	0.000E+00	0.000E+00	0.000E+00	0.000E+00
C-14	0.000E+00	0.000E+00	0.000E+00	0.000E+00	0.000E+00	0.000E+00	0.000E+00
NA-24	1.210E+07	1.210E+07	1.210E+07	1.210E+07	1.210E+07	1.210E+07	1.210E+07
P-32	0.000E+00	0.000E+00	0.000E+00	0.000E+00	0.000E+00	0.000E+00	0.000E+00
CR-51	4.680E+06	4.680E+06	4.680E+06	4.680E+06	4.680E+06	4.680E+06	4.680E+06
MN-54	1.340E+09	1.340E+09	1.340E+09	1.340E+09	1.340E+09	1.340E+09	1.340E+09
MN-56	9.050E+05	9.050E+05	9.050E+05	9.050E+05	9.050E+05	9.050E+05	9.05CE+05
FE-55	0.000E+00	0.000E+00	0.000E+00	0.000E+00	0.000E+00	0.000E+00	0.000E+00
FE-59	2.750E+08	2.750E+08	2.750E+08	2.750E+08	2.750E+08	2.750E+08	2.750E+08
CO-58	3.820E+08	3.820E+08	3.820E+08	3.820E+08	3.820E+08	3.820E+08	3.820E+08
CO-60	2.160E+10	2.160E+10	2.160E+10	2.160E+10	2.160E+10	2.160E+10	2.160E+10
NI-63	0.000E+00	0.000E+00	0.000E+00	0.000E+00	0.000E+00	0.000E+00	0.000E+00
NI-65	2.970E+05	2.970E+05	2.970E+05	2.970E+05	2.970E+05	2.970E+05	2.970E+05
CU-64	6.090E+05	6.090E+05	6.090E+05	6.090E+05	6.090E+05	6.090E+05	6.090E+05
ZN-65	7.450E+08	7.450E+08	7.450E+08	7.450E+08	7.450E+08	7.450E+08	7.450E+08
ZN-69	0.000E+00	0.000E+00	0.000E+00	0.000E+00	0.000E+00	0.000E+00	0.000E+00
BR-83	4.890E+03	4.890E+03	4.890E+03	4.890E+03	4.890E+03	4.890E+03	4.890E+03
BR-84	2.030E+05	2.030E+05	2.030E+05	2.030E+05	2.030E+05	2.030E+05	2.030E+05
BR-85	0.000E+00	0.000E+00	0.000E+00	0.000E+00	0.000E+00	0.000E+00	0.000E+00
RB-86	8.980E+06	8.980E+06	8.980E+06	8.980E+06	8.980E+06	8.980E+06	8.980E+06
RB-88	3.290E+04	3.290E+04	3.290E+04	3.290E+04	3.290E+04	3.290E+04	3.290E+04
RB-89	1.210E+05	1.210E+05	1.210E+05	1.210E+05	1.210E+05	1.210E+05	1.210E+05
SR-89	2.160E+04	2.160E+04	2.160E+04	2.160E+04	2.160E+04	2.160E+04	2.160E+04
SR-90	0.000E+00	0.000E+00	0.000E+00	0.000E+00	0.000E+00	0.000E+00	0.000E+00
SR-91	2.190E+06	2.190E+06	2.190E+06	2.190E+06	2.190E+06	2.190E+06	2.190E+06
SR-92	7.770E+05	7.770E+05	7.770E+05	7.770E+05	7.770E+05	7.770E+05	7.770E+05
Y-90	4.480E+03	4.480E+03	4.480E+03	4.480E+03	4.480E+03	4.480E+03	4.480E+03
Y-91M	1.010E+05	1.010E+05	1.010E+05	1.010E+05	1.010E+05	1.010E+05	1.010E+05
Y-91	1.080E+06	1.080E+06	1.080E+06	1.080E+06	1.080E+06	1.080E+06	1.080E+06
Y-92	1.800E+05	1.800E+05	1.800E+05	1.800E+05	1.800E+05	1.800E+05	1.800E+05
Y-93	1.850E+05	1.850E+05	1.850E+05	1.850E+05	1.850E+05	1.850E+05	1 850E+05
ZR-95	2.480E+08	2.480E+08	2.480E+08	2.480E+08	2.480E+08	2.480E+08	2.480E+08
ZR-97	2.940E+06	2.940E+06	2.940E+06	2.940E+06	2.940E+06	2.940E+06	2.940E+06

Attachment 12
Gaseous Effluent Pathway Dose Factors

GROUND PLANE DOSE FACTORS
INFANT
(m2*mrem/yr per uCi/sec)

Nuclide	Bone	Liver	Tbody	Thyroid	Kidney	Lung	Gitract
NB-95	1.360E+08	1.360E+08	1.360E+08	1.360E+08	1.360E+08	1.360E+08	1.360E+08
MO-99	4.050E+06	4.050E+06	4.050E+06	4.050E+06	4.050E+06	4.050E+06	4.050E+06
TC-99M	1.830E+05	1.830E+05	1.830E+05	1.830E+05	1.830E+05	1.830E+05	1.830E+05
TC-101	2.040E+04	2.040E+04	2.040E+04	2.040E+04	2.040E+04	2.040E+04	2.040E+04
RU-103	1.090E+08	1.090E+08	1.090E+08	1.090E+08	1.090E+08	1.090E+08	1.090E+08
RU-105	6.360E+05	6.360E+05	6.360E+05	6.360E+05	6.360E+05	6.360E+05	6.360E+05
RU-106	4.210E+08	4.210E+08	4.210E+08	4.210E+08	4.210E+08	4.210E+08	4.210E+08
RH-103M	0.000E+00	0.000E+00	0.000E+00	0.000E+00	0.000E+00	0.000E+00	0.000E+00
RH-106	0.000E+00	0.000E+00	0.000E+00	0.000E+00	0.000E+00	0.000E+00	0.000E+00
AG-110M	3.470E+09	3.470E+09	3.470E+09	3.470E+09	3.470E+09	3.470E+09	3.470E+09
SB-122	1.070E+07	1.070E+07	1.070E+07	1.070E+07	1.070E+07	1.070E+07	1.070E+07
TE-125M	1.550E+06	1.550E+06	1.550E+06	1.550E+06	1.550E+06	1.550E+06	1.550E+06
TE-127M	9.170E+04	9.170E+04	9.170E+04	9.170E+04	9.170E+04	9.170E+04	9.170E+04
TE-127	3.000E+03	3.000E+03	3.000E+03	3.000E+03	3.000E+03	3.000E+03	3.000E+03
TE-129M	2.000E+07	2.000E+07	2.000E+07	2.000E+07	2.000E+07	2.000E+07	2.000E+07
TE-129	2.600E+04	2.600E+04	2.600E+04	2.600E+04	2.600E+04	2.600E+04	2.600E+04
TE-131M	8.030E+06	8.030E+06	8.030E+06	8.030E+06	8.030E+06	8.030E+06	8.030E+06
TE-131	2.930E+04	2.930E+04	2.930E+04	2.930E+04	2.930E+04	2.930E+04	2.930E+04
TE-132	4.220E+06	4.220E+06	4.220E+06	4.220E+06	4.220E+06	4.220E+06	4.220E+06
I-130	5.530E+06	5.530E+06	5.530E+06	5.530E+06	5.530E+06	5.530E+06	5.530E+06
I-131	1.720E+07	1.720E+07	1.720E+07	1.720E+07	1.720E+07	1.720E+07	1.720E+07
I-132	1.240E+06	1.240E+06	1.240E+06	1.240E+06	1.240E+06	1.240E+06	1.240E+06
I-133	2.470E+06	2.470E+06	2.470E+06	2.470E+06	2.470E+06	2.470E+06	2.470E+06
I-134	4.490E+05	4.490E+05	4.490E+05	4.490E+05	4.490E+05	4.490E+05	4.490E+05
I-135	2.560E+06	2.560E+06	2.560E+06	2.560E+06	2.560E+06	2.560E+06	2.560E+06
CS-134	6.750E+09	6.750E+09	6.750E+09	6.750E+09	6.750E+09	6.750E+09	6.750E+09
CS-136	1.490E+08	1.490E+08	1.490E+08	1.490E+08	1.490E+08	1.490E+08	1.490E+08
CS-137	1.040E+10	1.040E+10	1.040E+10	1.040E+10	1.040E+10	1.040E+10	1.040E+10
CS-138	3.590E+05	3.590E+05	3.590E+05	3.590E+05	3.590E+05	3.590E+05	3.590E+05
BA-139	1.060E+05	1.060E+05	1.060E+05	1.060E+05	1.060E+05	1.060E+05	1.060E+05
BA-140	2.050E+07	2.050E+07	2.050E+07	2.050E+07	2.050E+07	2.050E+07	2.050E+07
BA-141	4.180E+04	4.180E+04	4.180E+04	4.180E+04	4.180E+04	4.180E+04	4.180E+04
BA-142	4.490E+04	4.490E+04	4.490E+04	4.490E+04	4.490E+04	4.490E+04	4.490E+04

Attachment 12
Gaseous Effluent Pathway Dose Factors

GROUND PLANE DOSE FACTORS
INFANT
(m2*mrem/yr per uCi/sec)

Nuclide	Bone	Liver	Tbody	Thyroid	Kidney	Lung	Gitract
LA-140	1.910E+07	1.910E+07	1.910E+07	1.910E+07	1.910E+07	1.910E+07	1.910E+07
LA-142	7.360E+05	7.360E+05	7.360E+05	7.360E+05	7.360E+05	7.360E+05	7.360E+05
CE-141	1.360E+07	1.360E+07	1.360E+07	1.360E+07	1.360E+07	1.360E+07	1.360E+07
CE-143	2.320E+06	2.320E+06	2.320E+06	2.320E+06	2.320E+06	2.320E+06	2.320E+06
CE-144	6.950E+07	6.950E+07	6.950E+07	6.950E+07	6.950E+07	6.950E+07	6.950E+07
PR-143	0.000E+00	0.000E+00	0.000E+00	0.000E+00	0.000E+00	0.000E+00	0.000E+00
PR-144	1.830E+03	1.830E+03	1.830E+03	1.830E+03	1.830E+03	1.830E+03	1.830E+03
ND-147	8.400E+06	8.400E+06	8.400E+06	8.400E+06	8.400E+06	8.400E+06	8.400E+06
EU-154	2.700E+10	2.700E+10	2.700E+10	2.700E+10	2.700E+10	2.700E+10	2.700E+10
EU-155	9.570E+08	9.570E+08	9.570E+08	9.570E+08	9.570E+08	9.570E+08	9.570E+08
W-187	2.360E+06	2.360E+06	2.360E+06	2.360E+06	2.360E+06	2.360E+06	2.360E+06
NP-239	1.710E+06	1.710E+06	1.710E+06	1.710E+06	1.710E+06	1.710E+06	1.710E+06

Attachment 12
Gaseous Effluent Pathway Dose Factors

INHALATION DOSE FACTORS
ADULT
(mrem/yr per uCi/m^3)

Nuclide	Bone	Liver	Tbody	Thyroid	Kidney	Lung	Gltract
H-3	0.000E+00	1.260E+03	1.260E+03	1.260E+03	1.260E+03	1.260E+03	1.260E+03
C-14	1.820E+04	3.410E+03	3.410E+03	3.410E+03	3.410E+03	3.410E+03	3.410E+03
NA-24	1.020E+04	1.020E+04	1.020E+04	1.020E+04	1.020E+04	1.020E+04	1.020E+04
P-32	1.320E+06	7.710E+04	5.010E+04	0.000E+00	0.000E+00	0.000E+00	8.640E+04
CR-51	0.000E+00	0.000E+00	1.000E+02	5.950E+01	2.280E+01	1.440E+04	3.320E+03
MN-54	0.000E+00	3.960E+04	6.300E+03	0.000E+00	9.840E+03	1.400E+06	7.740E+04
MN-56	0.000E+00	1.240E+00	1.830E-01	0.000E+00	1.300E+00	9.440E+03	2.020E+04
FE-55	2.460E+04	1.700E+04	3.940E+03	0.000E+00	0.000E+00	7.210E+04	6.030E+03
FE-59	1.180E+04	2.780E+04	1.060E+04	0.000E+00	0.000E+00	1.020E+06	1.880E+05
CO-57	0.000E+00	6.920E+02	6.710E+02	0.000E+00	0.000E+00	3.700E+05	3.140E+04
CO-58	0.000E+00	1.580E+03	2.070E+03	0.000E+00	0.000E+00	9.280E+05	1.060E+05
CO-60	0.000E+00	1.150E+04	1.480E+04	0.000E+00	0.000E+00	5.970E+06	2.850E+05
NI-63	4.320E+05	3.140E+04	1.450E+04	0.000E+00	0.000E+00	1.780E+05	1.340E+04
NI-65	1.540E+00	2.100E-01	9.120E-02	0.000E+00	0.000E+00	5.600E+03	1.230E+04
CU-64	0.000E+00	1.460E+00	6.150E-01	0.000E+00	4.620E+00	6.780E+03	4.900E+04
ZN-65	3.240E+04	1.030E+05	4.660E+04	0.000E+00	6.900E+04	8.640E+05	5.340E+04
ZN-69	3.380E-02	6.510E-02	4.520E-03	0.000E+00	4.220E-02	9.200E+02	1.630E+01
BR-82	0.000E+00	0.000E+00	1.350E+04	0.000E+00	0.000E+00	0.000E+00	1.040E+04
BR-83	0.000E+00	0.000E+00	2.410E+02	0.000E+00	0.000E+00	0.000E+00	2.320E+02
BR-84	0.000E+00	0.000E+00	3.130E+02	0.000E+00	0.000E+00	0.000E+00	1.640E-03
BR-85	0.000E+00	0.000E+00	1.280E+01	0.000E+00	0.000E+00	0.000E+00	0.000E+00
RB-86	0.000E+00	1.350E+05	5.900E+04	0.000E+00	0.000E+00	0.000E+00	1.660E+04
RB-88	0.000E+00	3.870E+02	1.930E+02	0.000E+00	0.000E+00	0.000E+00	3.340E-09
RB-89	0.000E+00	2.560E+02	1.700E+02	0.000E+00	0.000E+00	0.000E+00	0.000E+00
SR-89	3.040E+05	0.000E+00	8.720E+03	0.000E+00	0.000E+00	1.400E+06	3.500E+05
SR-90	9.920E+07	0.000E+00	6.100E+06	0.000E+00	0.000E+00	9.600E+06	7.220E+05
SR-91	6.190E+01	0.000E+00	2.500E+00	0.000E+00	0.000E+00	3.650E+04	1.910E+05
SR-92	6.740E+00	0.000E+00	2.910E-01	0.000E+00	0.000E+00	1.650E+04	4.300E+04
Y-90	2.090E+03	0.000E+00	5.610E+01	0.000E+00	0.000E+00	1.700E+05	5.060E+05
Y-91M	2.610E-01	0.000E+00	1.020E-02	0.000E+00	0.000E+00	1.920E+03	1.330E+00
Y-91	4.620E+05	0.000E+00	1.240E+04	0.000E+00	0.000E+00	1.700E+06	3.850E+05
Y-92	1.030E+01	0.000E+00	3.020E-01	0.000E+00	0.000E+00	1.570E+04	7.350E+04
Y-93	9.440E+01	0.000E+00	2.610E+00	0.000E+00	0.000E+00	4.850E+04	4.220E+05

Attachment 12
Gaseous Effluent Pathway Dose Factors

INHALATION DOSE FACTORS
ADULT
(mrem/yr per uCi/m^3)

Nuclide	Bone	Liver	Tbody	Thyroid	Kidney	Lung	GItract
ZR-95	1.070E+05	3.440E+04	2.330E+04	0.000E+00	5.420E+04	1.770E+06	1.500E+05
ZR-97	9.680E+01	1.960E+01	9.040E+00	0.000E+00	2.970E+01	7.870E+04	5.230E+05
NB-95	1.410E+04	7.820E+03	4.210E+03	0.000E+00	7.740E+03	5.050E+05	1.040E+05
NB-97	2.220E-01	5.620E-02	2.050E-02	0.000E+00	6.540E-02	2.400E+03	2.420E+02
MO-99	0.000E+00	1.210E+02	2.300E+01	0.000E+00	2.910E+02	9.120E+04	2.480E+05
TC-99M	1.030E-03	2.910E-03	3.700E-02	0.000E+00	4.420E-02	7.640E+02	4.160E+03
TC-101	4.180E-05	6.020E-05	5.900E-04	0.000E+00	1.080E-03	3.990E+02	0.000E+00
RU-103	1.530E+03	0.000E+00	6.580E+02	0.000E+00	5.830E+03	5.050E+05	1.100E+05
RU-105	7.900E-01	0.000E+00	3.110E-01	0.000E+00	1.020E+00	1.100E+04	4.820E+04
RU-106	6.910E+04	0.000E+00	8.720E+03	0.000E+00	1.340E+05	9.360E+06	9.120E+05
RH-103M	0.000E+00	0.000E+00	0.000E+00	0.000E+00	0.000E+00	0.000E+00	0.000E+00
RH-106	0.000E+00	0.000E+00	0.000E+00	0.000E+00	0.000E+00	0.000E+00	0.000E+00
AG-110M	1.080E+04	1.000E+04	5.940E+03	0.000E+00	1.970E+04	4.630E+06	3.020E+05
SB-122	3.100E+03	4.110E+03	4.110E+04	1.070E+03	1.550E+03	1.670E+05	2.020E+05
SB-124	3.120E+04	5.890E+02	1.240E+04	7.550E+01	0.000E+00	2.480E+06	4.060E+05
SB-125	5.340E+04	5.950E+02	1.260E+04	5.400E+01	0.000E+00	1.740E+06	1.010E+05
TE-125M	3.420E+03	1.580E+03	4.670E+02	1.050E+03	1.240E+04	3.140E+05	7.060E+04
TE-127M	1.260E+04	5.770E+03	1.570E+03	3.290E+03	4.580E+04	9.600E+05	1.500E+05
TE-127	1.400E+00	6.420E-01	3.100E-01	1.060E+00	5.100E+00	6.510E+03	5.740E+04
TE-129M	9.760E+03	4.670E+03	1.580E+03	3.440E+03	3.660E+04	1.160E+06	3.830E+05
TE-129	4.980E-02	2.390E-02	1.240E-02	3.900E-02	1.870E-01	1.940E+03	1.570E+02
TE-131M	6.990E+01	4.360E+01	2.900E+01	5.500E+01	3.090E+02	1.460E+05	5.560E+05
TE-131	1.110E-02	5.950E-03	3.590E-03	9.360E-03	4.370E-02	1.390E+03	1.840E+01
TE-132	2.600E+02	2.150E+02	1.620E+02	1.900E+02	1.460E+03	2.680E+05	5.100E+05
I-130	4.580E+03	1.340E+04	5.280E+03	1.140E+06	2.090E+04	7.690E+03	0.000E+00
I-131	2.520E+04	3.580E+04	2.050E+04	1.190E+07	6.130E+04	0.000E+00	6.280E+03
I-132	1.160E+03	3.260E+03	1.160E+03	1.140E+05	5.180E+03	0.000E+00	4.060E+02
I-133	8.640E+03	1.480E+04	4.520E+03	2.150E+06	2.580E+04	0.000E+00	8.880E+03
I-134	6.440E+02	1.730E+03	6.150E+02	2.980E+04	2.750E+03	0.000E+00	1.010E+00
I-135	2.680E+03	6.980E+03	2.570E+03	4.480E+05	1.110E+04	0.000E+00	5.250E+03
CS-134	3.730E+05	8.480E+05	7.280E+05	0.000E+00	2.870E+05	9.760E+04	1.040E+04
CS-136	3.900E+04	1.460E+05	1.100E+05	0.000E+00	8.560E+04	1.200E+04	1.170E+04
CS-137	4.780E+05	6.210E+05	4.280E+05	0.000E+00	2.220E+05	7.520E+04	8.400E+03
CS-138	3.310E+02	6.210E+02	3.240E+02	0.000E+00	4.800E+02	4.860E+01	1.860E-03

Attachment 12
Gaseous Effluent Pathway Dose Factors

INHALATION DOSE FACTORS
ADULT
(mrem/yr per uCi/m^3)

Nuclide	Bone	Liver	Tbody	Thyroid	Kidney	Lung	Gitract
BA-139	9.360E-01	6.660E-04	2.740E-02	0.000E+00	6.220E-04	3.760E+03	8.960E+02
BA-140	3.900E+04	4.900E+01	2.570E+03	0.000E+00	1.670E+01	1.270E+06	2.180E+05
BA-141	1.000E-01	7.530E-05	3.360E-03	0.000E+00	7.000E-05	1.940E+03	1.160E-07
BA-142	2.630E-02	2.700E-05	1.660E-03	0.000E+00	2.290E-05	1.190E+03	0.000E+00
LA-140	3.440E+02	1.740E+02	4.580E+01	0.000E+00	0.000E+00	1.360E+05	4.580E+05
LA-142	6.830E-01	3.100E-01	7.720E-02	0.000E+00	0.000E+00	6.330E+03	2.110E+03
CE-141	1.990E+04	1.350E+04	1.530E+03	0.000E+00	6.260E+03	3.620E+05	1.200E+05
CE-143	1.860E+02	1.380E+02	1.530E+01	0.000E+00	6.080E+01	7.980E+04	2.260E+05
CE-144	3.430E+06	1.430E+06	1.840E+05	0.000E+00	8.480E+05	7.780E+06	8.160E+05
PR-143	9.360E+03	3.750E+03	4.640E+02	0.000E+00	2.160E+03	2.810E+05	2.000E+05
PR-144	3.010E-02	1.250E-02	1.530E-03	0.000E+00	7.050E-03	1.020E+03	2.150E-08
ND-147	5.270E+03	6.100E+03	3.650E+02	0.000E+00	3.560E+03	2.210E+05	1.730E+05
EU-154	5.920E+06	7.280E+05	5.180E+05	0.000E+00	3.490E+06	4.670E+06	2.720E+05
EU-155	8.080E+05	1.140E+05	7.370E+04	0.000E+00	5.270E+05	7.570E+05	4.760E+04
W-187	8.480E+00	7.080E+00	2.480E+00	0.000E+00	0.000E+00	2.900E+04	1.550E+05
NP-239	2.300E+02	2.260E+01	1.240E+01	0.000E+00	7.000E+01	3.760E+04	1.190E+05

Attachment 12
Gaseous Effluent Pathway Dose Factors

INHALATION DOSE FACTORS
TEEN
(mrem/yr per uCi/m^3)

Nuclide	Bone	Liver	Tbody	Thyroid	Kidney	Lung	Gltract
H-3	0.000E+00	1.270E+03	1.270E+03	1.270E+03	1.270E+03	1.270E+03	1.270E+03
C-14	2.600E+04	4.870E+03	4.870E+03	4.870E+03	4.870E+03	4.870E+03	4.870E+03
NA-24	1.380E+04	1.380E+04	1.380E+04	1.380E+04	1.380E+04	1.380E+04	1.380E+04
P-32	1.890E+06	1.100E+05	7.160E+04	0.000E+00	0.000E+00	0.000E+00	9.280E+04
CR-51	0.000E+00	0.000E+00	1.350E+02	7.500E+01	3.070E+01	2.100E+04	3.000E+03
MN-54	0.000E+00	5.110E+04	8.400E+03	0.000E+00	1.270E+04	1.980E+06	6.680E+04
MN-56	0.000E+00	1.700E+00	2.520E-01	0.000E+00	1.790E+00	1.520E+04	5.740E+04
FE-55	3.340E+04	2.380E+04	5.540E+03	0.000E+00	0.000E+00	1.240E+05	6.390E+03
FE-59	1.590E+04	3.700E+04	1.430E+04	0.000E+00	0.000E+00	1.530E+06	1.780E+05
CO-57	0.000E+00	6.920E+02	9.200E+02	0.000E+00	0.000E+00	5.860E+05	3.140E+04
CO-58	0.000E+00	2.070E+03	2.780E+03	0.000E+00	0.000E+00	1.340E+06	9.520E+04
CO-60	0.000E+00	1.510E+04	1.980E+04	0.000E+00	0.000E+00	8.720E+06	2.590E+05
NI-63	5.800E+05	4.340E+04	1.980E+04	0.000E+00	0.000E+00	3.070E+05	1.420E+04
NI-65	2.180E+00	2.930E-01	1.270E-01	0.000E+00	0.000E+00	9.360E+03	3.670E+04
CU-64	0.000E+00	2.030E+00	8.480E-01	0.000E+00	6.410E+00	1.110E+04	6.140E+04
ZN-65	3.860E+04	1.340E+05	6.240E+04	0.000E+00	8.640E+04	1.240E+06	4.660E+04
ZN-69	4.830E-02	9.200E-02	6.460E-03	0.000E+00	6.020E-02	1.580E+03	2.850E+02
BR-82	0.000E+00	0.000E+00	1.820E+04	0.000E+00	0.000E+00	0.000E+00	0.000E+00
BR-83	0.000E+00	0.000E+00	3.440E+02	0.000E+00	0.000E+00	0.000E+00	0.000E+00
BR-84	0.000E+00	0.000E+00	4.330E+02	0.000E+00	0.000E+00	0.000E+00	0.000E+00
BR-85	0.000E+00	0.000E+00	1.830E+01	0.000E+00	0.000E+00	0.000E+00	0.000E+00
RB-86	0.000E+00	1.900E+05	8.400E+04	0.000E+00	0.000E+00	0.000E+00	1.770E+04
RB-88	0.000E+00	5.460E+02	2.720E+02	0.000E+00	0.000E+00	0.000E+00	2.920E-05
RB-89	0.000E+00	3.520E+02	2.330E+02	0.000E+00	0.000E+00	0.000E+00	3.380E-07
SR-89	4.340E+05	0.000E+00	1.250E+04	0.000E+00	0.000E+00	2.420E+06	3.710E+05
SR-90	1.080E+08	0.000E+00	6.680E+06	0.000E+00	0.000E+00	1.650E+07	7.650E+05
SR-91	8.800E+01	0.000E+00	3.510E+00	0.000E+00	0.000E+00	6.070E+04	2.590E+05
SR-92	9.520E+00	0.000E+00	4.060E-01	0.000E+00	0.000E+00	2.740E+04	1.190E+05
Y-90	2.980E+03	0.000E+00	8.000E+01	0.000E+00	0.000E+00	2.930E+05	5.590E+05
Y-91M	3.700E-01	0.000E+00	1.420E-02	0.000E+00	0.000E+00	3.200E+03	3.020E+01
Y-91	6.610E+05	0.000E+00	1.770E+04	0.000E+00	0.000E+00	2.940E+06	4.090E+05
Y-92	1.470E+01	0.000E+00	4.290E-01	0.000E+00	0.000E+00	2.680E+04	1.650E+05
Y-93	1.350E+02	0.000E+00	3.720E+00	0.000E+00	0.000E+00	8.320E+04	5.790E+05

Attachment 12
Gaseous Effluent Pathway Dose Factors

INHALATION DOSE FACTORS
TEEN
(mrem/yr per uCi/m^3)

Nuclide	Bone	Liver	Tbody	Thyroid	Kidney	Lung	Gltract
ZR-95	1.460E+05	4.580E+04	3.150E+04	0.000E+00	6.740E+04	2.690E+06	1.490E+05
ZR-97	1.380E+02	2.720E+01	1.260E+01	0.000E+00	4.120E+01	1.300E+05	6.300E+05
NB-95	1.830E+04	1.030E+04	5.660E+03	0.000E+00	1.000E+04	7.510E+05	9.680E+04
NB-97	3.140E-01	7.780E-02	2.840E-02	0.000E+00	9.120E-02	3.930E+03	2.170E+03
MO-99	0.000E+00	1.690E+02	3.220E+01	0.000E+00	4.110E+02	1.540E+05	2.690E+05
TC-99M	1.380E-03	3.860E-03	4.990E-02	0.000E+00	5.760E-02	1.150E+03	6.130E+03
TC-101	5.920E-05	8.400E-05	8.240E-04	0.000E+00	1.520E-03	6.670E+02	8.720E-07
RU-103	2.100E+03	0.000E+00	8.960E+02	0.000E+00	7.430E+03	7.830E+05	1.090E+05
RU-105	1.120E+00	0.000E+00	4.340E-01	0.000E+00	1.410E+00	1.820E+04	9.040E+04
RU-106	9.840E+04	0.000E+00	1.240E+04	0.000E+00	1.900E+05	1.610E+07	9.600E+05
RH-103M	0.000E+00	0.000E+00	0.000E+00	0.000E+00	0.000E+00	0.000E+00	0.000E+00
RH-106	0.000E+00	0.000E+00	0.000E+00	0.000E+00	0.000E+00	0.000E+00	0.000E+00
AG-110M	1.380E+04	1.310E+04	7.990E+03	0.000E+00	2.500E+04	6.750E+06	2.730E+05
SB-122	3.100E+03	4.110E+03	4.110E+04	1.070E+03	1.550E+03	1.670E+05	2.020E+05
SB-124	4.300E+04	7.940E+02	1.680E+04	9.760E+01	0.000E+00	3.850E+06	3.980E+05
SB-125	7.380E+04	8.080E+02	1.720E+04	7.040E+01	0.000E+00	2.740E+06	9.920E+04
TE-125M	4.880E+03	2.240E+03	6.670E+02	1.400E+03	0.000E+00	5.360E+05	7.500E+04
TE-127M	1.800E+04	8.160E+03	2.180E+03	4.380E+03	6.540E+04	1.660E+06	1.590E+05
TE-127	2.010E+00	9.120E-01	4.420E-01	1.420E+00	7.280E+00	1.120E+04	8.080E+04
TE-129M	1.390E+04	6.580E+03	2.250E+03	4.580E+03	5.190E+04	1.980E+06	4.050E+05
TE-129	7.100E-02	3.380E-02	1.760E-02	5.180E-02	2.660E-01	3.300E+03	1.620E+03
TE-131M	9.840E+01	6.010E+01	4.020E+01	7.250E+01	4.390E+02	2.380E+05	6.210E+05
TE-131	1.580E-02	8.320E-03	5.040E-03	1.240E-02	6.180E-02	2.340E+03	1.510E+01
TE-132	3.600E+02	2.900E+02	2.190E+02	2.460E+02	1.950E+03	4.490E+05	4.630E+05
I-130	6.240E+03	1.790E+04	7.170E+03	1.490E+06	2.750E+04	0.000E+00	9.120E+03
I-131	3.540E+04	4.910E+04	2.640E+04	1.460E+07	8.400E+04	0.000E+00	6.490E+03
I-132	1.590E+03	4.380E+03	1.580E+03	1.510E+05	6.920E+03	0.000E+00	1.270E+03
I-133	1.220E+04	2.050E+04	6.220E+03	2.920E+06	3.590E+04	0.000E+00	1.030E+04
I-134	8.880E+02	2.320E+03	8.400E+02	3.950E+04	3.660E+03	0.000E+00	2.040E+01
I-135	3.700E+03	9.440E+03	3.490E+03	6.210E+05	1.490E+04	0.000E+00	6.950E+03
CS-134	5.020E+05	1.130E+06	5.490E+05	0.000E+00	3.750E+05	1.460E+05	9.760E+03
CS-136	5.150E+04	1.940E+05	1.370E+05	0.000E+00	1.100E+05	1.780E+04	1.090E+04
CS-137	6.700E+05	8.480E+05	3.110E+05	0.000E+00	3.040E+05	1.210E+05	8.480E+03
CS-138	4.660E+02	8.560E+02	4.460E+02	0.000E+00	6.620E+02	7.870E+01	2.700E-01

Attachment 12
Gaseous Effluent Pathway Dose Factors

INHALATION DOSE FACTORS
TEEN
(mrem/yr per uCi/m^3)

Nuclide	Bone	Liver	Tbody	Thyroid	Kidney	Lung	Gitract
BA-139	1.340E+00	9.440E-04	3.900E-02	0.000E+00	8.880E-04	6.460E+03	6.450E+03
BA-140	5.470E+04	6.700E+01	3.520E+03	0.000E+00	2.280E+01	2.030E+06	2.290E+05
BA-141	1.420E-01	1.060E-04	4.740E-03	0.000E+00	9.840E-05	3.290E+03	7.460E-04
BA-142	3.700E-02	3.700E-05	2.270E-03	0.000E+00	3.140E-05	1.910E+03	0.000E+00
LA-140	4.790E+02	2.360E+02	6.260E+01	0.000E+00	0.000E+00	2.140E+05	4.870E+05
LA-142	9.600E-01	4.250E-01	1.060E-01	0.000E+00	0.000E+00	1.020E+04	1.200E+04
CE-141	2.840E+04	1.900E+04	2.170E+03	0.000E+00	8.880E+03	6.140E+05	1.260E+05
CE-143	2.660E+02	1.940E+02	2.160E+01	0.000E+00	8.640E+01	1.300E+05	2.550E+05
CE-144	4.890E+06	2.020E+06	2.620E+05	0.000E+00	1.210E+06	1.340E+07	8.640E+05
PR-143	1.340E+04	5.310E+03	6.620E+02	0.000E+00	3.090E+03	4.830E+05	2.140E+05
PR-144	4.300E-02	1.760E-02	2.180E-03	0.000E+00	1.010E-02	1.750E+03	2.350E-04
ND-147	7.860E+03	8.560E+03	5.130E+02	0.000E+00	5.020E+03	3.720E+05	1.820E+05
EU-154	7.540E+06	9.840E+05	6.880E+05	0.000E+00	4.350E+06	7.300E+06	2.670E+05
EU-155	1.600E+06	1.570E+05	9.680E+04	0.000E+00	6.120E+05	1.210E+07	4.780E+05
W-187	1.200E+01	9.760E+00	3.430E+00	0.000E+00	0.000E+00	4.740E+04	1.770E+05
NP-239	3.380E+02	3.190E+01	1.770E+01	0.000E+00	1.000E+02	6.490E+04	1.320E+05

Attachment 12
Gaseous Effluent Pathway Dose Factors

INHALATION DOSE FACTORS
CHILD
(mrem/yr per uCi/m^3)

Nuclide	Bone	Liver	Tbody	Thyroid	Kidney	Lung	Gitract
H-3	0.000E+00	1.120E+03	1.120E+03	1.120E+03	1.120E+03	1.120E+03	1.120E+03
C-14	3.590E+04	6.730E+03	6.730E+03	6.730E+03	6.730E+03	6.730E+03	6.730E+03
NA-24	1.610E+04	1.610E+04	1.610E+04	1.610E+04	1.610E+04	1.610E+04	1.610E+04
P-32	2.600E+06	1.140E+05	9.880E+04	0.000E+00	0.000E+00	0.000E+00	4.220E+04
CR-51	0.000E+00	0.000E+00	1.540E+02	8.550E+01	2.430E+01	1.700E+04	1.080E+03
MN-54	0.000E+00	4.290E+04	9.510E+03	0.000E+00	1.000E+04	1.580E+06	2.290E+04
MN-56	0.000E+00	1.660E+00	3.120E-01	0.000E+00	1.670E+00	1.310E+04	1.230E+05
FE-55	4.740E+04	2.520E+04	7.770E+03	0.000E+00	0.000E+00	1.110E+05	2.870E+03
FE-59	2.070E+04	3.340E+04	1.670E+04	0.000E+00	0.000E+00	1.270E+06	7.070E+04
CO-57	0.000E+00	9.030E+02	1.070E+03	0.000E+00	0.000E+00	5.070E+05	1.320E+04
CO-58	0.000E+00	1.770E+03	3.160E+03	0.000E+00	0.000E+00	1.110E+06	3.440E+04
CO-60	0.000E+00	1.310E+04	2.260E+04	0.000E+00	0.000E+00	7.070E+06	9.620E+04
NI-63	8.210E+05	4.630E+04	2.800E+04	0.000E+00	0.000E+00	2.750E+05	6.330E+03
NI-65	2.990E+00	2.960E-01	1.640E-01	0.000E+00	0.000E+00	8.180E+03	8.400E+04
CU-64	0.000E+00	1.990E+00	1.070E+00	0.000E+00	6.030E+00	9.580E+03	3.670E+04
ZN-65	4.260E+04	1.130E+05	7.030E+04	0.000E+00	7.140E+04	9.950E+05	1.630E+04
ZN-69	6.700E-02	9.660E-02	8.920E-03	0.000E+00	5.850E-02	1.420E+03	9.510E+03
BR-82	0.000E+00	0.000E+00	2.090E+04	0.000E+00	0.000E+00	0.000E+00	0.000E+00
BR-83	0.000E+00	0.000E+00	4.740E+02	0.000E+00	0.000E+00	0.000E+00	0.000E+00
BR-84	0.000E+00	0.000E+00	5.480E+02	0.000E+00	0.000E+00	0.000E+00	0.000E+00
BR-85	0.000E+00	0.000E+00	2.530E+01	0.000E+00	0.000E+00	0.000E+00	0.000E+00
RB-86	0.000E+00	1.980E+05	1.140E+05	0.000E+00	0.000E+00	0.000E+00	7.990E+03
RB-88	0.000E+00	5.620E+02	3.660E+02	0.000E+00	0.000E+00	0.000E+00	1.720E+01
RB-89	0.000E+00	3.450E+02	2.900E+02	0.000E+00	0.000E+00	0.000E+00	1.890E+00
SR-89	5.990E+05	0.000E+00	1.720E+04	0.000E+00	0.000E+00	2.160E+06	1.670E+05
SR-90	1.010E+08	0.000E+00	6.440E+06	0.000E+00	0.000E+00	1.480E+07	3.430E+05
SR-91	1.210E+02	0.000E+00	4.590E+00	0.000E+00	0.000E+00	5.330E+04	1.740E+05
SR-92	1.310E+01	0.000E+00	5.250E-01	0.000E+00	0.000E+00	2.400E+04	2.420E+05
Y-90	4.110E+03	0.000E+00	1.110E+02	0.000E+00	0.000E+00	2.620E+05	2.680E+05
Y-91M	5.070E-01	0.000E+00	1.840E-02	0.000E+00	0.000E+00	2.810E+03	1.720E+03
Y-91	9.140E+05	0.000E+00	2.440E+04	0.000E+00	0.000E+00	2.630E+06	1.840E+05
Y-92	2.040E+01	0.000E+00	5.810E-01	0.000E+00	0.000E+00	2.390E+04	2.390E+05
Y-93	1.860E+02	0.000E+00	5.110E+00	0.000E+00	0.000E+00	7.440E+04	3.890E+05
ZR-95	1.900E+05	4.180E+04	3.700E+04	0.000E+00	5.960E+04	2.230E+06	6.110E+04

Attachment 12
Gaseous Effluent Pathway Dose Factors

INHALATION DOSE FACTORS
CHILD
(mrem/yr per uCi/m^3)

Nuclide	Bone	Liver	Tbody	Thyroid	Kidney	Lung	Gitract
ZR-97	1.880E+02	2.720E+01	1.600E+01	0.000E+00	3.890E+01	1.130E+05	3.510E+05
NB-95	2.350E+04	9.180E+03	6.550E+03	0.000E+00	8.620E+03	6.140E+05	3.700E+04
NB-97	4.290E-01	7.700E-02	3.600E-02	0.000E+00	8.550E-02	3.420E+03	2.780E+04
MO-99	0.000E+00	1.720E+02	4.260E+01	0.000E+00	3.920E+02	1.350E+05	1.270E+05
TC-99M	1.780E-03	3.480E-03	5.770E-02	0.000E+00	5.070E-02	9.510E+02	4.810E+03
TC-101	8.100E-05	8.510E-05	1.080E-03	0.000E+00	1.450E-03	5.850E+02	1.630E+01
RU-103	2.790E+03	0.000E+00	1.070E+03	0.000E+00	7.030E+03	6.620E+05	4.480E+04
RU-105	1.530E+00	0.000E+00	5.550E-01	0.000E+00	1.340E+00	1.590E+04	9.950E+04
RU-106	1.360E+05	0.000E+00	1.690E+04	0.000E+00	1.840E+05	1.430E+07	4.290E+05
RH-103M	0.000E+00	0.000E+00	0.000E+00	0.000E+00	0.000E+00	0.000E+00	0.000E+00
RH-106	0.000E+00	0.000E+00	0.000E+00	0.000E+00	0.000E+00	0.000E+00	0.000E+00
AG-110M	1.690E+04	1.140E+04	9.140E+03	0.000E+00	2.120E+04	5.480E+06	1.000E+05
SB-122	1.440E+03	1.980E+03	1.900E+04	4.960E+02	7.180E+02	7.730E+04	9.360E+04
SB-124	5.740E+04	7.400E+02	2.000E+04	1.260E+02	0.000E+00	3.240E+06	1.640E+05
SB-125	9.840E+04	7.590E+02	2.070E+04	9.100E+01	0.000E+00	2.320E+06	4.030E+04
TE-125M	6.730E+03	2.330E+03	9.140E+02	1.920E+03	0.000E+00	4.770E+05	3.380E+04
TE-127M	2.490E+04	8.550E+03	3.020E+03	6.070E+03	6.360E+04	1.480E+06	7.140E+04
TE-127	2.770E+00	9.510E-01	6.110E-01	1.960E+00	7.070E+00	1.000E+04	5.620E+04
TE-129M	1.920E+04	6.850E+03	3.040E+03	6.330E+03	5.030E+04	1.760E+06	1.820E+05
TE-129	9.770E-02	3.500E-02	2.380E-02	7.140E-02	2.570E-01	2.930E+03	2.550E+04
TE-131M	1.340E+02	5.920E+01	5.070E+01	9.770E+01	4.000E+02	2.060E+05	3.080E+05
TE-131	2.170E-02	8.440E-03	6.590E-03	1.700E-02	5.880E-02	2.050E+03	1.330E+03
TE-132	4.810E+02	2.720E+02	2.630E+02	3.170E+02	1.840E+03	3.770E+05	1.360E+05
I-130	8.180E+03	1.640E+04	8.440E+03	1.850E+06	2.450E+04	0.000E+00	5.110E+03
I-131	4.810E+04	4.810E+04	2.730E+04	1.620E+07	7.880E+04	0.000E+00	2.840E+03
I-132	2.120E+03	4.070E+03	1.880E+03	1.940E+05	6.250E+03	0.000E+00	3.200E+03
I-133	1.660E+04	2.030E+04	7.700E+03	3.850E+06	3.380E+04	0.000E+00	5.480E+03
I-134	1.170E+03	2.160E+03	9.950E+02	5.070E+04	3.300E+03	0.000E+00	9.550E+02
I-135	4.920E+03	8.730E+03	4.140E+03	7.920E+05	1.340E+04	0.000E+00	4.440E+03
CS-134	6.510E+05	1.010E+06	2.250E+05	0.000E+00	3.300E+05	1.210E+05	3.850E+03
CS-136	6.510E+04	1.710E+05	1.160E+05	0.000E+00	9.550E+04	1.450E+04	4.180E+03
CS-137	9.070E+05	8.250E+05	1.280E+05	0.000E+00	2.820E+05	1.040E+05	3.620E+03
CS-138	6.330E+02	8.400E+02	5.550E+02	0.000E+00	6.220E+02	6.810E+01	2.700E+02

Attachment 12
Gaseous Effluent Pathway Dose Factors

INHALATION DOSE FACTORS
CHILD
(mrem/yr per uCi/m^3)

Nuclide	Bone	Liver	Tbody	Thyroid	Kidney	Lung	Gitract
BA-139	1.840E+00	9.840E-04	5.370E-02	0.000E+00	8.620E-04	5.770E+03	5.770E+04
BA-140	7.400E+04	6.480E+01	4.330E+03	0.000E+00	2.110E+01	1.740E+06	1.020E+05
BA-141	1.960E-01	1.090E-04	6.360E-03	0.000E+00	9.470E-05	2.920E+03	2.750E+02
BA-142	5.000E-02	3.600E-05	2.790E-03	0.000E+00	2.910E-05	1.640E+03	2.740E+00
LA-140	6.440E+02	2.250E+02	7.550E+01	0.000E+00	0.000E+00	1.830E+05	2.260E+05
LA-142	1.300E+00	4.110E-01	1.290E-01	0.000E+00	0.000E+00	8.700E+03	7.590E+04
CE-141	3.920E+04	1.950E+04	2.900E+03	0.000E+00	8.550E+03	5.440E+05	5.660E+04
CE-143	3.660E+02	1.990E+02	2.870E+01	0.000E+00	8.360E+01	1.150E+05	1.270E+05
CE-144	6.770E+06	2.120E+06	3.610E+05	0.000E+00	1.170E+06	1.200E+07	3.890E+05
PR-143	1.850E+04	5.550E+03	9.140E+02	0.000E+00	3.000E+03	4.330E+05	9.730E+04
PR-144	5.960E-02	1.850E-02	3.000E-03	0.000E+00	9.770E-03	1.570E+03	1.970E+02
ND-147	1.080E+04	8.730E+03	6.810E+02	0.000E+00	4.810E+03	3.280E+05	8.210E+04
EU-154	1.010E+07	9.210E+05	8.400E+05	0.000E+00	4.030E+06	6.140E+06	1.100E+05
EU-155	2.070E+06	1.500E+05	1.180E+05	0.000E+00	5.590E+05	1.030E+06	1.990E+05
W-187	1.630E+01	9.660E+00	4.330E+00	0.000E+00	0.000E+00	4.110E+04	9.100E+04
NP-239	4.700E+02	3.340E+01	2.350E+01	0.000E+00	9.730E+01	5.810E+04	6.400E+04

Attachment 12
Gaseous Effluent Pathway Dose Factors

INHALATION DOSE FACTORS
INFANT
(mrem/yr per uCi/m^3)

Nuclide	Bone	Liver	Tbody	Thyroid	Kidney	Lung	Gitract
H-3	0.000E+00	6.470E+02	6.470E+02	6.470E+02	6.470E+02	6.470E+02	6.470E+02
C-14	2.650E+04	5.310E+03	5.310E+03	5.310E+03	5.310E+03	5.310E+03	5.310E+03
NA-24	1.060E+04	1.060E+04	1.060E+04	1.060E+04	1.060E+04	1.060E+04	1.060E+04
P-32	2.030E+06	1.120E+05	7.740E+04	0.000E+00	0.000E+00	0.000E+00	1.610E+04
CR-51	0.000E+00	0.000E+00	8.950E+01	5.750E+01	1.320E+01	1.280E+04	3.570E+02
MN-54	0.000E+00	2.530E+04	4.980E+03	0.000E+00	4.980E+03	1.000E+06	7.060E+03
MN-56	0.000E+00	1.540E+00	2.210E-01	0.000E+00	1.100E+00	1.250E+04	7.170E+04
FE-55	1.970E+04	1.170E+04	3.330E+03	0.000E+00	0.000E+00	8.690E+04	1.090E+03
FE-59	1.360E+04	2.350E+04	9.480E+03	0.000E+00	0.000E+00	1.020E+06	2.480E+04
CO-57	0.000E+00	6.510E+02	6.410E+02	0.000E+00	0.000E+00	3.790E+05	4.860E+03
CO-58	0.000E+00	1.220E+03	1.820E+03	0.000E+00	0.000E+00	7.770E+05	1.110E+04
CO-60	0.000E+00	8.020E+03	1.180E+04	0.000E+00	0.000E+00	4.510E+06	3.190E+04
NI-63	3.390E+05	2.040E+04	1.160E+04	0.000E+00	0.000E+00	2.090E+05	2.420E+03
NI-65	2.390E+00	2.840E-01	1.230E-01	0.000E+00	0.000E+00	8.120E+03	5.010E+04
CU-64	0.000E+00	1.880E+00	7.740E-01	0.000E+00	3.980E+00	9.300E+03	1.500E+04
ZN-65	1.930E+04	6.260E+04	3.110E+04	0.000E+00	3.250E+04	6.470E+05	5.140E+04
ZN-69	5.390E-02	9.670E-02	7.180E-03	0.000E+00	4.020E-02	1.470E+03	1.320E+04
BR-82	0.000E+00	0.000E+00	1.330E+04	0.000E+00	0.000E+00	0.000E+00	0.000E+00
BR-83	0.000E+00	0.000E+00	3.810E+02	0.000E+00	0.000E+00	0.000E+00	0.000E+00
BR-84	0.000E+00	0.000E+00	4.000E+02	0.000E+00	0.000E+00	0.000E+00	0.000E+00
BR-85	0.000E+00	0.000E+00	2.040E+01	0.000E+00	0.000E+00	0.000E+00	0.000E+00
RB-86	0.000E+00	1.900E+05	8.820E+04	0.000E+00	0.000E+00	0.000E+00	3.040E+03
RB-88	0.000E+00	5.570E+02	2.870E+02	0.000E+00	0.000E+00	0.000E+00	3.390E+02
RB-89	0.000E+00	3.210E+02	2.060E+02	0.000E+00	0.000E+00	0.000E+00	6.820E+01
SR-89	3.980E+05	0.000E+00	1.140E+04	0.000E+00	0.000E+00	2.030E+06	6.400E+04
SR-90	4.090E+07	0.000E+00	2.590E+06	0.000E+00	0.000E+00	1.120E+07	1.310E+05
SR-91	9.560E+01	0.000E+00	3.460E+00	0.000E+00	0.000E+00	5.260E+04	7.340E+04
SR-92	1.050E+01	0.000E+00	3.910E-01	0.000E+00	0.000E+00	2.380E+04	1.400E+05
Y-90	3.290E+03	0.000E+00	8.820E+01	0.000E+00	0.000E+00	2.690E+05	1.040E+05
Y-91M	4.070E-01	0.000E+00	1.390E-02	0.000E+00	0.000E+00	2.790E+03	2.350E+03
Y-91	5.880E+05	0.000E+00	1.570E+04	0.000E+00	0.000E+00	2.450E+06	7.030E+04
Y-92	1.640E+01	0.000E+00	4.610E-01	0.000E+00	0.000E+00	2.450E+04	1.270E+05
Y-93	1.500E+02	0.000E+00	4.070E+00	0.000E+00	0.000E+00	7.640E+04	1.670E+05

Attachment 12
Gaseous Effluent Pathway Dose Factors

INHALATION DOSE FACTORS
INFANT
(mrem/yr per uCi/m^3)

Nuclide	Bone	Liver	Tbody	Thyroid	Kidney	Lung	GItract
ZR-95	1.150E+05	2.790E+04	2.030E+04	0.000E+00	3.110E+04	1.750E+06	2.170E+04
ZR-97	1.500E+02	2.560E+01	1.170E+01	0.000E+00	2.590E+01	1.100E+05	1.400E+05
NB-95	1.570E+04	6.430E+03	3.780E+03	0.000E+00	4.720E+03	4.790E+05	1.270E+04
NB-97	3.420E-01	7.290E-02	2.630E-02	0.000E+00	5.700E-02	3.320E+03	2.690E+04
MO-99	0.000E+00	1.650E+02	3.230E+01	0.000E+00	2.650E+02	1.350E+05	4.870E+04
TC-99M	1.400E-03	2.880E-03	3.720E-02	0.000E+00	3.110E-02	8.110E+02	2.030E+03
TC-101	6.510E-05	8.230E-05	8.120E-04	0.000E+00	9.790E-04	5.840E+02	8.440E+02
RU-103	2.020E+03	0.000E+00	6.790E+02	0.000E+00	4.240E+03	5.520E+05	1.610E+04
RU-105	1.220E+00	0.000E+00	4.100E-01	0.000E+00	8.990E-01	1.570E+04	4.840E+04
RU-106	8.680E+04	0.000E+00	1.090E+04	0.000E+00	1.070E+05	1.160E+07	1.640E+05
RH-103M	0.000E+00	0.000E+00	0.000E+00	0.000E+00	0.000E+00	0.000E+00	0.000E+00
RH-106	0.000E+00	0.000E+00	0.000E+00	0.000E+00	0.000E+00	0.000E+00	0.000E+00
AG-110M	9.980E+03	7.220E+03	5.000E+03	0.000E+00	1.090E+04	3.670E+06	3.300E+04
SB-122	5.430E+02	7.200E+02	7.200E+03	1.880E+02	2.720E+02	2.930E+04	3.540E+04
SB-124	3.790E+04	5.560E+02	1.200E+04	1.010E+02	0.000E+00	2.650E+06	5.910E+04
SB-125	5.170E+04	4.770E+02	1.090E+04	6.230E+01	0.000E+00	1.640E+06	1.470E+04
TE-125M	4.760E+03	1.990E+03	6.580E+02	1.620E+03	0.000E+00	4.470E+05	1.290E+04
TE-127M	1.670E+04	6.900E+03	2.070E+03	4.870E+03	3.750E+04	1.310E+06	2.730E+04
TE-127	2.230E+00	9.530E-01	4.890E-01	1.850E+00	4.860E+00	1.030E+04	2.440E+04
TE-129M	1.410E+04	6.090E+03	2.230E+03	5.470E+03	3.180E+04	1.680E+06	6.900E+04
TE-129	7.880E-02	3.470E-02	1.880E-02	6.750E-02	1.750E-01	3.000E+03	2.630E+04
TE-131M	1.070E+02	5.500E+01	3.630E+01	8.930E+01	2.650E+02	1.990E+05	1.190E+05
TE-131	1.740E-02	8.220E-03	5.000E-03	1.580E-02	3.990E-02	2.060E+03	8.220E+03
TE-132	3.720E+02	2.370E+02	1.760E+02	2.790E+02	1.030E+03	3.400E+05	4.410E+04
I-130	6.360E+03	1.390E+04	5.570E+03	1.600E+06	1.530E+04	0.000E+00	1.990E+03
I-131	3.790E+04	4.440E+04	1.960E+04	1.480E+07	5.180E+04	0.000E+00	1.060E+03
I-132	1.690E+03	3.540E+03	1.260E+03	1.690E+05	3.950E+03	0.000E+00	1.900E+03
I-133	1.320E+04	1.920E+04	5.600E+03	3.560E+06	2.240E+04	0.000E+00	2.160E+03
I-134	9.210E+02	1.880E+03	6.650E+02	4.450E+04	2.090E+03	0.000E+00	1.290E+03
I-135	3.860E+03	7.600E+03	2.770E+03	6.960E+05	8.470E+03	0.000E+00	1.830E+03
CS-134	3.960E+05	7.030E+05	7.450E+04	0.000E+00	1.900E+05	7.970E+04	1.330E+03
CS-136	4.830E+04	1.350E+05	5.290E+04	0.000E+00	5.640E+04	1.180E+04	1.430E+03
CS-137	5.490E+05	6.120E+05	4.550E+04	0.000E+00	1.720E+05	7.130E+04	1.330E+03
CS-138	5.050E+02	7.810E+02	3.980E+02	0.000E+00	4.100E+02	6.540E+01	8.760E+02

Attachment 12
Gaseous Effluent Pathway Dose Factors

INHALATION DOSE FACTORS
INFANT
(mrem/yr per uCi/m^3)

Nuclide	Bone	Liver	Tbody	Thyroid	Kidney	Lung	Gitract
BA-139	1.480E+00	9.840E-04	4.300E-02	0.000E+00	5.920E-04	5.950E+03	5.100E+04
BA-140	5.600E+04	5.600E+01	2.900E+03	0.000E+00	1.340E+01	1.600E+06	3.840E+04
BA-141	1.570E-01	1.080E-04	4.970E-03	0.000E+00	6.500E-05	2.970E+03	4.750E+03
BA-142	3.980E-02	3.300E-05	1.960E-03	0.000E+00	1.900E-05	1.550E+03	6.930E+02
LA-140	5.050E+02	2.000E+02	5.150E+01	0.000E+00	0.000E+00	1.680E+05	8.480E+04
LA-142	1.030E+00	3.770E-01	9.040E-02	0.000E+00	0.000E+00	8.220E+03	5.950E+04
CE-141	2.770E+04	1.670E+04	1.990E+03	0.000E+00	5.250E+03	5.170E+05	2.160E+04
CE-143	2.930E+02	1.930E+02	2.210E+01	0.000E+00	5.640E+01	1.160E+05	4.970E+04
CE-144	3.190E+06	1.210E+06	1.760E+05	0.000E+00	5.380E+05	9.840E+06	1.480E+05
PR-143	1.400E+04	5.240E+03	6.990E+02	0.000E+00	1.970E+03	4.330E+05	3.720E+04
PR-144	4.790E-02	1.850E-02	2.410E-03	0.000E+00	6.720E-03	1.610E+03	4.280E+03
ND-147	7.940E+03	8.130E+03	5.000E+02	0.000E+00	3.150E+03	3.220E+05	3.120E+04
EU-154	4.140E+06	4.840E+05	3.430E+05	0.000E+00	1.540E+06	4.270E+06	3.980E+04
EU-155	8.360E+05	8.010E+04	4.840E+04	0.000E+00	2.210E+05	7.280E+05	7.270E+04
W-187	1.300E+01	9.020E+00	3.120E+00	0.000E+00	0.000E+00	3.960E+04	3.560E+04
NP-239	3.710E+02	3.320E+01	1.880E+01	0.000E+00	6.620E+01	5.950E+04	2.490E+04

Attachment 12
Gaseous Effluent Pathway Dose Factors

GRASS-COW-MILK DOSE FACTORS
ADULT
(m^2 *mrem/yr per uCi/sec)

Nuclide	Bone	Liver	Tbody	Thyroid	Kidney	Lung	Gltract
H-3	0.000E+00	7.630E+02	7.630E+02	7.630E+02	7.630E+02	7.630E+02	7.630E+02
C-14	3.630E+05	7.260E+04	7.260E+04	7.260E+04	7.260E+04	7.260E+04	7.260E+04
NA-24	2.540E+06	2.540E+06	2.540E+06	2.540E+06	2.540E+06	2.540E+06	2.540E+06
P-32	1.710E+10	1.060E+09	6.600E+08	0.000E+00	0.000E+00	0.000E+00	1.920E+09
CR-51	0.000E+00	0.000E+00	2.860E+04	1.710E+04	6.300E+03	3.800E+04	7.200E+06
MN-54	0.000E+00	8.400E+06	1.600E+06	0.000E+00	2.500E+06	0.000E+00	2.570E+07
MN-56	0.000E+00	4.230E-03	7.510E-04	0.000E+00	5.380E-03	0.000E+00	1.350E-01
FE-55	2.510E+07	1.730E+07	4.040E+06	0.000E+00	0.000E+00	9.670E+06	9.950E+06
FE-59	2.980E+07	7.000E+07	2.680E+07	0.000E+00	0.000E+00	1.950E+07	2.330E+08
CO-57	0.000E+00	1.280E+06	2.130E+06	0.000E+00	0.000E+00	0.000E+00	3.250E+07
CO-58	0.000E+00	4.720E+06	1.060E+07	0.000E+00	0.000E+00	0.000E+00	9.570E+07
CO-60	0.000E+00	1.640E+07	3.620E+07	0.000E+00	0.000E+00	0.000E+00	3.080E+08
NI-63	6.730E+09	4.660E+08	2.260E+08	0.000E+00	0.000E+00	0.000E+00	9.730E+07
NI-65	3.700E-01	4.810E-02	2.190E-02	0.000E+00	0.000E+00	0.000E+00	1.220E+00
CU-64	0.000E+00	2.410E+04	1.130E+04	0.000E+00	6.080E+04	0.000E+00	2.050E+06
ZN-65	1.370E+09	4.360E+09	1.970E+09	0.000E+00	2.920E+09	0.000E+00	2.750E+09
ZN-69	0.000E+00	0.000E+00	0.000E+00	0.000E+00	0.000E+00	0.000E+00	0.000E+00
BR-82	0.000E+00	0.000E+00	0.000E+00	0.000E+00	0.000E+00	0.000E+00	0.000E+00
BR-83	0.000E+00	0.000E+00	0.000E+00	0.000E+00	0.000E+00	0.000E+00	0.000E+00
BR-84	0.000E+00	0.000E+00	0.000E+00	0.000E+00	0.000E+00	0.000E+00	0.000E+00
BR-85	0.000E+00	0.000E+00	0.000E+00	0.000E+00	0.000E+00	0.000E+00	0.000E+00
RB-86	0.000E+00	2.590E+09	1.210E+09	0.000E+00	0.000E+00	0.000E+00	5.110E+08
RB-88	0.000E+00	0.000E+00	0.000E+00	0.000E+00	0.000E+00	0.000E+00	0.000E+00
RB-89	0.000E+00	0.000E+00	0.000E+00	0.000E+00	0.000E+00	0.000E+00	0.000E+00
SR-89	1.450E+09	0.000E+00	4.160E+07	0.000E+00	0.000E+00	0.000E+00	2.330E+08
SR-90	4.680E+10	0.000E+00	1.150E+10	0.000E+00	0.000E+00	0.000E+00	1.350E+09
SR-91	3.130E+04	0.000E+00	1.270E+03	0.000E+00	0.000E+00	0.000E+00	1.490E+05
SR-92	4.890E-01	0.000E+00	2.110E-02	0.000E+00	0.000E+00	0.000E+00	9.680E+00

Attachment 12
Gaseous Effluent Pathway Dose Factors

GRASS-COW-MILK DOSE FACTORS
ADULT
(m^2 *mrem/yr per uCi/sec)

Nuclide	Bone	Liver	Tbody	Thyroid	Kidney	Lung	Gitract
Y-90	7.070E+01	0.000E+00	1.900E+00	0.000E+00	0.000E+00	0.000E+00	7.500E+05
Y-91M	0.000E+00	0.000E+00	0.000E+00	0.000E+00	0.000E+00	0.000E+00	0.000E+00
Y-91	8.600E+03	0.000E+00	2.300E+02	0.000E+00	0.000E+00	0.000E+00	4.730E+06
Y-92	5.420E-05	0.000E+00	1.580E-06	0.000E+00	0.000E+00	0.000E+00	9.490E-01
Y-93	2.330E-01	0.000E+00	6.430E-03	0.000E+00	0.000E+00	0.000E+00	7.390E+03
ZR-95	9.460E+02	3.030E+02	2.050E+02	0.000E+00	4.760E+02	0.000E+00	9.620E+05
ZR-97	4.260E-01	8.590E-02	3.930E-02	0.000E+00	1.300E-01	0.000E+00	2.660E+04
NB-95	8.250E+04	4.590E+04	2.470E+04	0.000E+00	4.540E+04	0.000E+00	2.790E+08
NB-97	0.000E+00	0.000E+00	0.000E+00	0.000E+00	0.000E+00	0.000E+00	5.470E-09
MO-99	0.000E+00	2.520E+07	4.800E+06	0.000E+00	5.720E+07	0.000E+00	5.850E+07
TC-99M	3.250E+00	9.190E+00	1.170E+02	0.000E+00	1.400E+02	4.500E+00	5.440E+03
TC-101	0.000E+00	0.000E+00	0.000E+00	0.000E+00	0.000E+00	0.000E+00	0.000E+00
RU-103	1.020E+03	0.000E+00	4.390E+02	0.000E+00	3.890E+03	0.000E+00	1.190E+05
RU-105	8.570E-04	0.000E+00	3.380E-04	0.000E+00	1.110E-02	0.000E+00	5.240E-01
RU-106	2.040E+04	0.000E+00	2.580E+03	0.000E+00	3.940E+04	0.000E+00	1.320E+06
RH-103M	0.000E+00	0.000E+00	0.000E+00	0.000E+00	0.000E+00	0.000E+00	0.000E+00
RH-106	0.000E+00	0.000E+00	0.000E+00	0.000E+00	0.000E+00	0.000E+00	0.000E+00
AG-110M	5.830E+07	5.390E+07	3.200E+07	0.000E+00	1.060E+08	0.000E+00	2.200E+10
SB-122	6.010E+05	6.270E+05	7.590E+06	9.960E+04	2.960E+05	1.290E+05	7.470E+07
SB-124	8.580E+08	1.620E+07	3.400E+08	2.080E+06	0.000E+00	6.680E+08	2.440E+10
SB-125	6.810E+08	7.610E+06	1.620E+08	6.930E+05	0.000E+00	5.250E+08	7.500E+09
TE-125M	1.630E+07	5.900E+06	2.180E+06	4.900E+06	6.630E+07	0.000E+00	6.500E+07
TE-127M	4.580E+07	1.640E+07	5.580E+06	1.170E+07	1.860E+08	0.000E+00	1.540E+08
TE-127	6.720E+02	2.410E+02	1.450E+02	4.980E+02	2.740E+03	0.000E+00	5.300E+04
TE-129M	6.040E+07	2.250E+07	9.570E+06	2.080E+07	2.520E+08	0.000E+00	3.040E+08
TE-129	0.000E+00	0.000E+00	0.000E+00	0.000E+00	0.000E+00	0.000E+00	0.000E+00
TE-131M	3.610E+05	1.770E+05	1.470E+05	2.800E+05	1.790E+06	0.000E+00	1.750E+07
TE-131	0.000E+00	0.000E+00	0.000E+00	0.000E+00	0.000E+00	0.000E+00	0.000E+00
TE-132	2.390E+06	1.550E+06	1.450E+06	1.710E+06	1.490E+07	0.000E+00	7.320E+07
I-130	4.260E+05	1.260E+06	4.960E+05	1.070E+08	1.960E+06	0.000E+00	1.080E+06
I-131	2.960E+08	4.240E+08	2.430E+08	1.390E+11	7.270E+08	0.000E+00	1.120E+08
I-132	1.640E-01	4.370E-01	1.530E-01	1.530E+01	6.970E-01	0.000E+00	8.220E-02
I-133	3.970E+06	6.900E+06	2.100E+06	1.010E+09	1.200E+07	0.000E+00	6.200E+06

Attachment 12
Gaseous Effluent Pathway Dose Factors

GRASS-COW-MILK DOSE FACTORS
ADULT
(m^2 *mrem/yr per uCi/sec)

Nuclide	Bone	Liver	Tbody	Thyroid	Kidney	Lung	Gitract
I-134	0.000E+00	0.000E+00	0.000E+00	0.000E+00	0.000E+00	0.000E+00	0.000E+00
I-135	1.390E+04	3.630E+04	1.340E+04	2.400E+06	5.830E+04	0.000E+00	4.100E+04
CS-134	5.650E+09	1.340E+10	1.100E+10	0.000E+00	4.350E+09	1.440E+09	2.350E+08
CS-136	2.610E+08	1.030E+09	7.420E+08	0.000E+00	5.740E+08	7.870E+07	1.170E+08
CS-137	7.380E+09	1.010E+10	6.610E+09	0.000E+00	3.430E+09	1.140E+09	1.950E+08
CS-138	0.000E+00	0.000E+00	0.000E+00	0.000E+00	0.000E+00	0.000E+00	0.000E+00
BA-139	4.700E-08	0.000E+00	1.380E-09	0.000E+00	0.000E+00	0.000E+00	8.340E-08
BA-140	2.690E+07	3.380E+04	1.760E+06	0.000E+00	1.150E+04	1.930E+04	5.540E+07
BA-141	0.000E+00	0.000E+00	0.000E+00	0.000E+00	0.000E+00	0.000E+00	0.000E+00
BA-142	0.000E+00	0.000E+00	0.000E+00	0.000E+00	0.000E+00	0.000E+00	0.000E+00
LA-140	4.490E+00	2.260E+00	5.970E-01	0.000E+00	0.000E+00	0.000E+00	1.660E+05
LA-142	0.000E+00	0.000E+00	0.000E+00	0.000E+00	0.000E+00	0.000E+00	3.030E-08
CE-141	4.840E+03	3.270E+03	3.710E+02	0.000E+00	1.520E+03	0.000E+00	1.250E+07
CE-143	4.190E+01	3.090E+04	3.420E+00	0.000E+00	1.360E+01	0.000E+00	1.160E+06
CE-144	3.580E+05	1.500E+05	1.920E+04	0.000E+00	8.870E+04	0.000E+00	1.210E+08
PR-143	1.590E+02	6.370E+01	7.880E+00	0.000E+00	3.680E+01	0.000E+00	6.960E+05
PR-144	0.000E+00	0.000E+00	0.000E+00	0.000E+00	0.000E+00	0.000E+00	0.000E+00
ND-147	9.420E+01	1.090E+02	6.520E+00	0.000E+00	6.370E+01	0.000E+00	5.230E+05
EU-154	2.370E+04	2.910E+03	2.070E+03	0.000E+00	1.390E+04	0.000E+00	2.110E+06
EU-155	3.300E+03	4.680E+02	3.020E+02	0.000E+00	2.160E+03	0.000E+00	3.680E+05
W-187	6.560E+03	5.480E+03	1.920E+03	0.000E+00	0.000E+00	0.000E+00	1.800E+06
NP-239	3.660E+00	3.600E-01	1.980E-01	0.000E+00	1.120E+00	0.000E+00	7.390E+04

Attachment 12
Gaseous Effluent Pathway Dose Factors

GRASS-COW-MILK DOSE FACTORS
TEEN
(m^2 *mrem/yr per uCi/sec)

Nuclide	Bone	Liver	Tbody	Thyroid	Kidney	Lung	Gitract
H-3	0.000E+00	9.940E+02	9.940E+02	9.940E+02	9.940E+02	9.940E+02	9.940E+02
C-14	6.700E+05	1.340E+05	1.340E+05	1.340E+05	1.340E+05	1.340E+05	1.340E+05
NA-24	4.440E+06	4.440E+06	4.440E+06	4.440E+06	4.440E+06	4.440E+06	4.440E+06
P-32	3.150E+10	1.950E+09	1.220E+09	0.000E+00	0.000E+00	0.000E+00	2.650E+09
CR-51	0.000E+00	0.000E+00	5.000E+04	2.780E+04	1.100E+04	7.130E+04	8.400E+06
MN-54	0.000E+00	1.400E+07	2.780E+06	0.000E+00	4.170E+06	0.000E+00	2.870E+07
MN-56	0.000E+00	7.510E-03	1.330E-03	0.000E+00	9.500E-03	0.000E+00	4.940E-01
FE-55	4.450E+07	3.160E+07	7.360E+06	0.000E+00	0.000E+00	2.000E+07	1.370E+07
FE-59	5.200E+07	1.210E+08	4.680E+07	0.000E+00	0.000E+00	3.820E+07	2.870E+08
CO-57	0.000E+00	2.250E+06	3.760E+06	0.000E+00	0.000E+00	0.000E+00	4.190E+07
CO-58	0.000E+00	7.950E+06	1.830E+07	0.000E+00	0.000E+00	0.000E+00	1.100E+08
CO-60	0.000E+00	2.780E+07	6.260E+07	0.000E+00	0.000E+00	0.000E+00	3.620E+08
NI-63	1.180E+10	8.350E+08	4.010E+08	0.000E+00	0.000E+00	0.000E+00	1.330E+08
NI-65	6.780E-01	8.660E-02	3.940E-02	0.000E+00	0.000E+00	0.000E+00	4.700E+00
CU-64	0.000E+00	4.290E+04	2.020E+04	0.000E+00	1.090E+05	0.000E+00	3.330E+06
ZN-65	2.110E+09	7.310E+09	3.410E+09	0.000E+00	4.680E+09	0.000E+00	3.100E+09
ZN-69	0.000E+00	0.000E+00	0.000E+00	0.000E+00	0.000E+00	0.000E+00	0.000E+00
BR-82	0.000E+00	0.000E+00	0.000E+00	0.000E+00	0.000E+00	0.000E+00	0.000E+00
BR-83	0.000E+00	0.000E+00	0.000E+00	0.000E+00	0.000E+00	0.000E+00	0.000E+00
BR-84	0.000E+00	0.000E+00	0.000E+00	0.000E+00	0.000E+00	0.000E+00	0.000E+00
BR-85	0.000E+00	0.000E+00	0.000E+00	0.000E+00	0.000E+00	0.000E+00	0.000E+00
RB-86	0.000E+00	4.730E+09	2.220E+09	0.000E+00	0.000E+00	0.000E+00	7.000E+08
RB-88	0.000E+00	0.000E+00	0.000E+00	0.000E+00	0.000E+00	0.000E+00	0.000E+00
RB-89	0.000E+00	0.000E+00	0.000E+00	0.000E+00	0.000E+00	0.000E+00	0.000E+00
SR-89	2.670E+09	0.000E+00	7.660E+07	0.000E+00	0.000E+00	0.000E+00	3.180E+08
SR-90	6.610E+10	0.000E+00	1.630E+10	0.000E+00	0.000E+00	0.000E+00	1.860E+09
SR-91	5.750E+04	0.000E+00	2.290E+03	0.000E+00	0.000E+00	0.000E+00	2.610E+05
SR-92	8.950E-01	0.000E+00	3.810E-02	0.000E+00	0.000E+00	0.000E+00	2.280E+01
Y-90	1.300E+02	0.000E+00	3.500E+00	0.000E+00	0.000E+00	0.000E+00	1.070E+06
Y-91M	0.000E+00	0.000E+00	0.000E+00	0.000E+00	0.000E+00	0.000E+00	0.000E+00
Y-91	1.580E+04	0.000E+00	4.240E+02	0.000E+00	0.000E+00	0.000E+00	6.4[illegible]
Y-92	1.000E-04	0.000E+00	2.900E-06	0.000E+00	0.000E+00	0.000E+00	2.750E+00
Y-93	4.300E-01	0.000E+00	1.180E-02	0.000E+00	0.000E+00	0.000E+00	1.310E+04

Attachment 12
Gaseous Effluent Pathway Dose Factors

GRASS-COW-MILK DOSE FACTORS
TEEN
(m^2 *mrem/yr per uCi/sec)

Nuclide	Bone	Liver	Tbody	Thyroid	Kidney	Lung	Gltract
ZR-95	1.650E+03	5.220E+02	3.590E+02	0.000E+00	7.670E+02	0.000E+00	1.200E+06
ZR-97	7.750E-01	1.530E-01	7.060E-02	0.000E+00	2.320E-01	0.000E+00	4.150E+04
NB-95	1.410E+05	7.800E+04	4.300E+04	0.000E+00	7.570E+04	0.000E+00	3.340E+08
NB-97	0.000E+00	0.000E+00	0.000E+00	0.000E+00	0.000E+00	0.000E+00	6.340E-08
MO-99	0.000E+00	4.560E+07	8.690E+06	0.000E+00	1.040E+08	0.000E+00	8.160E+07
TC-99M	5.640E+00	1.570E+01	2.040E+02	0.000E+00	2.340E+02	8.730E+00	1.030E+04
TC-101	0.000E+00	0.000E+00	0.000E+00	0.000E+00	0.000E+00	0.000E+00	0.000E+00
RU-103	1.810E+03	0.000E+00	7.750E+02	0.000E+00	6.400E+03	0.000E+00	1.520E+05
RU-105	1.570E-03	0.000E+00	6.080E-04	0.000E+00	1.970E-02	0.000E+00	1.260E+00
RU-106	3.750E+04	0.000E+00	4.730E+03	0.000E+00	7.230E+04	0.000E+00	1.800E+06
RH-103M	0.000E+00	0.000E+00	0.000E+00	0.000E+00	0.000E+00	0.000E+00	0.000E+00
RH-106	0.000E+00	0.000E+00	0.000E+00	0.000E+00	0.000E+00	0.000E+00	0.000E+00
AG-110M	9.630E+07	9.110E+07	5.540E+07	0.000E+00	1.740E+08	0.000E+00	2.560E+10
SB-122	7.760E+05	8.090E+05	9.800E+06	1.290E+05	3.820E+05	1.660E+05	9.640E+07
SB-124	1.530E+09	2.820E+07	5.970E+08	3.470E+06	0.000E+00	1.340E+09	3.080E+10
SB-125	1.220E+09	1.330E+07	2.850E+08	1.160E+06	0.000E+00	1.070E+09	9.480E+09
TE-125M	3.000E+07	1.080E+07	4.020E+06	8.390E+06	0.000E+00	0.000E+00	8.860E+07
TE-127M	8.440E+07	2.990E+07	1.000E+07	2.010E+07	3.420E+08	0.000E+00	2.100E+08
TE-127	1.240E+03	4.410E+02	2.680E+02	8.590E+02	5.040E+03	0.000E+00	9.610E+04
TE-129M	1.110E+08	4.100E+07	1.750E+07	3.570E+07	4.620E+08	0.000E+00	4.150E+08
TE-129	0.000E+00	0.000E+00	0.000E+00	0.000E+00	1.670E-09	0.000E+00	2.180E-09
TE-131M	6.570E+05	3.150E+05	2.630E+05	4.740E+05	3.290E+06	0.000E+00	2.530E+07
TE-131	0.000E+00	0.000E+00	0.000E+00	0.000E+00	0.000E+00	0.000E+00	0.000E+00
TE-132	4.280E+06	2.710E+06	2.550E+06	2.860E+06	2.600E+07	0.000E+00	8.580E+07
I-130	7.490E+05	2.170E+06	8.660E+05	1.770E+08	3.340E+06	0.000E+00	1.670E+06
I-131	5.380E+08	7.530E+08	4.040E+08	2.200E+11	1.300E+09	0.000E+00	1.490E+08
I-132	2.900E-01	7.590E-01	2.720E-01	2.560E+01	1.200E+00	0.000E+00	3.310E-01
I-133	7.240E+06	1.230E+07	3.750E+06	1.720E+09	2.150E+07	0.000E+00	9.300E+06
I-134	0.000E+00	0.000E+00	0.000E+00	0.000E+00	0.000E+00	0.000E+00	0.000E+00
I-135	2.470E+04	6.350E+04	2.350E+04	4.080E+06	1.000E+05	0.000E+00	7.030E+04
CS-134	9.810E+09	2.310E+10	1.070E+10	0.000E+00	7.340E+09	2.800E+09	2.870E+08
CS-135	4.450E+08	1.750E+09	1.180E+09	0.000E+00	9.530E+08	1.500E+08	1.410E+08
CS-137	1.340E+10	1.780E+10	6.200E+09	0.000E+00	6.060E+09	2.350E+09	2.530E+08
CS-138	0.000E+00	0.000E+00	0.000E+00	0.000E+00	0.000E+00	0.000E+00	0.000E+00

Attachment 12
Gaseous Effluent Pathway Dose Factors

GRASS-COW-MILK DOSE FACTORS
TEEN
(m^2 *mrem/yr per uCi/sec)

Nuclide	Bone	Liver	Tbody	Thyroid	Kidney	Lung	Gitract
BA-139	8.690E-08	0.000E+00	2.530E-09	0.000E+00	0.000E+00	0.000E+00	7.750E-07
BA-140	4.850E+07	5.950E+04	3.130E+06	0.000E+00	2.020E+04	4.000E+04	7.490E+07
BA-141	0.000E+00	0.000E+00	0.000E+00	0.000E+00	0.000E+00	0.000E+00	0.000E+00
BA-142	0.000E+00	0.000E+00	0.000E+00	0.000E+00	0.000E+00	0.000E+00	0.000E+00
LA-140	8.060E+00	3.960E+00	1.050E+00	0.000E+00	0.000E+00	0.000E+00	2.270E+05
LA-142	0.000E+00	0.000E+00	0.000E+00	0.000E+00	0.000E+00	0.000E+00	2.230E-07
CE-141	8.870E+03	5.920E+03	6.810E+02	0.000E+00	2.790E+03	0.000E+00	1.690E+07
CE-143	7.690E+01	5.600E+04	6.250E+00	0.000E+00	2.510E+01	0.000E+00	1.680E+06
CE-144	6.580E+05	2.720E+05	3.540E+04	0.000E+00	1.630E+05	0.000E+00	1.660E+08
PR-143	2.920E+02	1.170E+02	1.450E+01	0.000E+00	6.770E+01	0.000E+00	9.610E+05
PR-144	0.000E+00	0.000E+00	0.000E+00	0.000E+00	0.000E+00	0.000E+00	0.000E+00
ND-147	1.810E+02	1.970E+02	1.180E+01	0.000E+00	1.160E+02	0.000E+00	7.110E+05
EU-154	3.920E+04	5.060E+03	3.570E+03	0.000E+00	2.260E+04	0.000E+00	2.670E+06
EU-155	8.600E+03	8.310E+02	5.140E+02	0.000E+00	3.250E+03	0.000E+00	4.760E+06
W-187	1.200E+04	9.780E+03	3.430E+03	0.000E+00	0.000E+00	0.000E+00	2.650E+06
NP-239	6.990E+00	6.590E-01	3.660E-01	0.000E+00	2.070E+00	0.000E+00	1.060E+05

Attachment 12
Gaseous Effluent Pathway Dose Factors

GRASS-COW-MILK DOSE FACTORS
CHILD
(m^2 *mrem/yr per uCi/sec)

Nuclide	Bone	Liver	Tbody	Thyroid	Kidney	Lung	Gltract
H-3	0.000E+00	1.570E+03	1.570E+03	1.570E+03	1.570E+03	1.570E+03	1.570E+03
C-14	1.650E+06	3.290E+05	3.290E+05	3.290E+05	3.290E+05	3.290E+05	3.290E+05
NA-24	9.230E+06	9.230E+06	9.230E+06	9.230E+06	9.230E+06	9.230E+06	9.230E+06
P-32	7.770E+10	3.640E+09	3.000E+09	0.000E+00	0.000E+00	0.000E+00	2.150E+09
CR-51	0.000E+00	0.000E+00	1.020E+05	5.660E+04	1.550E+04	1.030E+05	5.410E+06
MN-54	0.000E+00	2.090E+07	5.580E+06	0.000E+00	5.870E+06	0.000E+00	1.760E+07
MN-56	0.000E+00	1.310E-02	2.950E-03	0.000E+00	1.580E-02	0.000E+00	1.900E+00
FE-55	1.120E+08	5.930E+07	1.840E+07	0.000E+00	0.000E+00	3.350E+07	1.100E+07
FE-59	1.200E+08	1.950E+08	9.710E+07	0.000E+00	0.000E+00	5.650E+07	2.030E+08
CO-57	0.000E+00	3.840E+06	7.770E+06	0.000E+00	0.000E+00	0.000E+00	3.140E+07
CO-58	0.000E+00	1.210E+07	3.720E+07	0.000E+00	0.000E+00	0.000E+00	7.080E+07
CO-60	0.000E+00	4.320E+07	1.270E+08	0.000E+00	0.000E+00	0.000E+00	2.390E+08
NI-63	2.960E+10	1.590E+09	1.010E+09	0.000E+00	0.000E+00	0.000E+00	1.070E+08
NI-65	1.660E+00	1.560E-01	9.110E-02	0.000E+00	0.000E+00	0.000E+00	1.910E+01
CU-64	0.000E+00	7.550E+04	4.560E+04	0.000E+00	1.820E+05	0.000E+00	3.540E+06
ZN-65	4.130E+09	1.100E+10	6.850E+09	0.000E+00	6.940E+09	0.000E+00	1.930E+09
ZN-69	0.000E+00	0.000E+00	0.000E+00	0.000E+00	0.000E+00	0.000E+00	2.140E-09
BR-82	0.000E+00	0.000E+00	0.000E+00	0.000E+00	0.000E+00	0.000E+00	0.000E+00
BR-83	0.000E+00	0.000E+00	0.000E+00	0.000E+00	0.000E+00	0.000E+00	0.000E+00
BR-84	0.000E+00	0.000E+00	0.000E+00	0.000E+00	0.000E+00	0.000E+00	0.000E+00
BR-85	0.000E+00	0.000E+00	0.000E+00	0.000E+00	0.000E+00	0.000E+00	0.000E+00
RB-86	0.000E+00	8.770E+09	5.390E+09	0.000E+00	0.000E+00	0.000E+00	5.640E+08
RB-88	0.000E+00	0.000E+00	0.000E+00	0.000E+00	0.000E+00	0.000E+00	0.000E+00
RB-89	0.000E+00	0.000E+00	0.000E+00	0.000E+00	0.000E+00	0.000E+00	0.000E+00
SR-89	6.620E+09	0.000E+00	1.890E+08	0.000E+00	0.000E+00	0.000E+00	2.560E+08
SR-90	1.120E+11	0.000E+00	2.830E+10	0.000E+00	0.000E+00	0.000E+00	1.510E+09
SR-91	1.410E+05	0.000E+00	5.330E+03	0.000E+00	0.000E+00	0.000E+00	3.120E+05
SR-92	2.190E+00	0.000E+00	8.760E-02	0.000E+00	0.000E+00	0.000E+00	4.140E+01
Y-90	3.220E+02	0.000E+00	8.610E+00	0.000E+00	0.000E+00	0.000E+00	9.150E+05
Y-91M	0.000E+00	0.000E+00	0.000E+00	0.000E+00	0.000E+00	0.000E+00	0.000E+00
Y-91	3.910E+04	0.000E+00	1.040E+03	0.000E+00	0.000E+00	0.000E+00	5.210E+06
Y-92	2.460E-04	0.000E+00	7.030E-06	0.000E+00	0.000E+00	0.000E+00	7.100E+00
Y-93	1.060E+00	0.000E+00	2.900E-02	0.000E+00	0.000E+00	0.000E+00	1.570E+04

Attachment 12
Gaseous Effluent Pathway Dose Factors

GRASS-COW-MILK DOSE FACTORS
CHILD
(m^2 *mrem/yr per uCi/sec)

Nuclide	Bone	Liver	Tbody	Thyroid	Kidney	Lung	Gitract
ZR-95	3.840E+03	8.450E+02	7.520E+02	0.000E+00	1.210E+03	0.000E+00	8.810E+05
ZR-97	1.890E+00	2.720E-01	1.610E-01	0.000E+00	3.910E-01	0.000E+00	4.130E+04
NB-95	3.180E+05	1.240E+05	8.840E+04	0.000E+00	1.160E+05	0.000E+00	2.290E+08
NB-97	0.000E+00	0.000E+00	0.000E+00	0.000E+00	0.000E+00	0.000E+00	1.450E-06
MO-99	0.000E+00	8.290E+07	2.050E+07	0.000E+00	1.770E+08	0.000E+00	6.860E+07
TC-99M	1.290E+01	2.540E+01	4.200E+02	0.000E+00	3.680E+02	1.290E+01	1.440E+04
TC-101	0.000E+00	0.000E+00	0.000E+00	0.000E+00	0.000E+00	0.000E+00	0.000E+00
RU-103	4.290E+03	0.000E+00	1.650E+03	0.000E+00	1.080E+04	0.000E+00	1.110E+05
RU-105	3.820E-03	0.000E+00	1.390E-03	0.000E+00	3.360E-02	0.000E+00	2.490E+00
RU-106	9.240E+04	0.000E+00	1.150E+04	0.000E+00	1.250E+05	0.000E+00	1.440E+06
RH-103M	0.000E+00	0.000E+00	0.000E+00	0.000E+00	0.000E+00	0.000E+00	0.000E+00
RH-106	0.000E+00	0.000E+00	0.000E+00	0.000E+00	0.000E+00	0.000E+00	0.000E+00
AG-110M	2.090E+08	1.410E+08	1.130E+08	0.000E+00	2.630E+08	0.000E+00	1.680E+10
SB-122	4.140E+06	4.320E+06	5.230E+07	6.870E+05	2.040E+06	8.890E+05	5.150E+08
SB-124	3.620E+09	4.700E+07	1.270E+09	7.990E+06	0.000E+00	2.010E+09	2.260E+10
SB-125	2.900E+09	2.240E+07	6.080E+08	2.690E+06	0.000E+00	1.620E+09	6.930E+09
TE-125M	7.380E+07	2.000E+07	9.840E+06	2.070E+07	0.000E+00	0.000E+00	7.120E+07
TE-127M	2.080E+08	5.600E+07	2.470E+07	4.970E+07	5.930E+08	0.000E+00	1.680E+08
TE-127	3.060E+03	8.250E+02	6.560E+02	2.120E+03	8.710E+03	0.000E+00	1.200E+05
TE-129M	2.720E+08	7.610E+07	4.230E+07	8.780E+07	8.000E+08	0.000E+00	3.320E+08
TE-129	0.000E+00	0.000E+00	0.000E+00	0.000E+00	2.870E-09	0.000E+00	6.120E-08
TE-131M	1.600E+06	5.530E+05	5.890E+05	1.140E+06	5.350E+06	0.000E+00	2.240E+07
TE-131	0.000E+00	0.000E+00	0.000E+00	0.000E+00	0.000E+00	0.000E+00	0.000E+00
TE-132	1.020E+07	4.520E+06	5.460E+06	6.580E+06	4.200E+07	0.000E+00	4.550E+07
I-130	1.750E+06	3.540E+06	1.820E+06	3.900E+08	5.290E+06	0.000E+00	1.660E+06
I-131	1.300E+09	1.310E+09	7.460E+08	4.340E+11	2.150E+09	0.000E+00	1.170E+08
I-132	6.860E-01	1.260E+00	5.800E-01	5.850E+01	1.930E+00	0.000E+00	1.480E+00
I-133	1.760E+07	2.180E+07	8.230E+06	4.040E+09	3.630E+07	0.000E+00	8.770E+06
I-134	0.000E+00	0.000E+00	0.000E+00	0.000E+00	0.000E+00	0.000E+00	0.000E+00
I-135	5.840E+04	1.050E+05	4.970E+04	9.300E+06	1.610E+05	0.000E+00	8.000E+04
CS-134	2.260E+10	3.710E+10	7.830E+09	0.000E+00	1.150E+10	4.130E+09	2.000E+08
CS-136	1.000E+09	2.760E+09	1.790E+09	0.000E+00	1.470E+09	2.190E+08	9.700E+07
CS-137	3.220E+10	3.090E+10	4.550E+09	0.000E+00	1.010E+10	3.620E+09	1.930E+08
CS-138	0.000E+00	0.000E+00	0.000E+00	0.000E+00	0.000E+00	0.000E+00	0.000E+00

Attachment 12
Gaseous Effluent Pathway Dose Factors

GRASS-COW-MILK DOSE FACTORS
CHILD
(m^2 *mrem/yr per uCi/sec)

Nuclide	Bone	Liver	Tbody	Thyroid	Kidney	Lung	Gitract
BA-139	2.140E-07	0.000E+00	6.190E-09	0.000E+00	0.000E+00	0.000E+00	1.230E-05
BA-140	1.170E+08	1.030E+05	6.840E+06	0.000E+00	3.340E+04	6.120E+04	5.940E+07
BA-141	0.000E+00	0.000E+00	0.000E+00	0.000E+00	0.000E+00	0.000E+00	0.000E+00
BA-142	0.000E+00	0.000E+00	0.000E+00	0.000E+00	0.000E+00	0.000E+00	0.000E+00
LA-140	1.930E+01	6.740E+00	2.270E+00	0.000E+00	0.000E+00	0.000E+00	1.880E+05
LA-142	0.000E+00	0.000E+00	0.000E+00	0.000E+00	0.000E+00	0.000E+00	2.510E-06
CE-141	2.190E+04	1.090E+04	1.620E+03	0.000E+00	4.780E+03	0.000E+00	1.360E+07
CE-143	1.890E+02	1.020E+05	1.480E+01	0.000E+00	4.290E+01	0.000E+00	1.500E+06
CE-144	1.620E+06	5.090E+05	8.660E+04	0.000E+00	2.820E+05	0.000E+00	1.330E+08
PR-143	7.230E+02	2.170E+02	3.590E+01	0.000E+00	1.170E+02	0.000E+00	7.800E+05
PR-144	0.000E+00	0.000E+00	0.000E+00	0.000E+00	0.000E+00	0.000E+00	0.000E+00
ND-147	4.450E+02	3.600E+02	2.790E+01	0.000E+00	1.980E+02	0.000E+00	5.710E+05
EU-154	9.420E+04	8.470E+03	7.740E+03	0.000E+00	3.720E+04	0.000E+00	1.970E+06
EU-155	1.970E+04	1.420E+03	1.110E+03	0.000E+00	5.300E+03	0.000E+00	3.540E+06
W-187	2.910E+04	1.720E+04	7.730E+03	0.000E+00	0.000E+00	0.000E+00	2.420E+06
NP-239	1.720E+01	1.230E+00	8.680E-01	0.000E+00	3.570E+00	0.000E+00	9.140E+04

Attachment 12
Gaseous Effluent Pathway Dose Factors

GRASS-COW-MILK DOSE FACTORS
INFANT
(m^2 *mrem/yr per uCi/sec)

Nuclide	Bone	Liver	Tbody	Thyroid	Kidney	Lung	Gitract
H-3	0.000E+00	2.380E+03	2.380E+03	2.380E+03	2.380E+03	2.380E+03	2.380E+03
C-14	3.230E+06	6.890E+05	6.890E+05	6.890E+05	6.890E+05	6.890E+05	6.890E+05
NA-24	1.610E+07	1.610E+07	1.610E+07	1.610E+07	1.610E+07	1.610E+07	1.610E+07
P-32	1.600E+11	9.420E+09	6.210E+09	0.000E+00	0.000E+00	0.000E+00	2.170E+09
CR-51	0.000E+00	0.000E+00	1.610E+05	1.050E+05	2.300E+04	2.050E+05	4.710E+06
MN-54	0.000E+00	3.890E+07	8.830E+06	0.000E+00	8.630E+06	0.000E+00	1.430E+07
MN-56	0.000E+00	3.210E-02	5.530E-03	0.000E+00	2.760E-02	0.000E+00	2.910E+00
FE-55	1.350E+08	8.720E+07	2.330E+07	0.000E+00	0.000E+00	4.270E+07	1.110E+07
FE-59	2.250E+08	3.930E+08	1.550E+08	0.000E+00	0.000E+00	1.160E+08	1.880E+08
CO-57	0.000E+00	8.950E+06	1.460E+07	0.000E+00	0.000E+00	0.000E+00	3.050E+07
CO-58	0.000E+00	2.430E+07	6.060E+07	0.000E+00	0.000E+00	0.000E+00	6.050E+07
CO-60	0.000E+00	8.810E+07	2.080E+08	0.000E+00	0.000E+00	0.000E+00	2.100E+08
NI-63	3.490E+10	2.160E+09	1.210E+09	0.000E+00	0.000E+00	0.000E+00	1.070E+08
NI-65	3.510E+00	3.970E-01	1.810E-01	0.000E+00	0.000E+00	0.000E+00	3.020E+01
CU-64	0.000E+00	1.880E+05	8.690E+04	0.000E+00	3.170E+05	0.000E+00	3.850E+06
ZN-65	5.550E+09	1.900E+10	8.780E+09	0.000E+00	9.230E+09	0.000E+00	1.610E+10
ZN-69	0.000E+00	0.000E+00	0.000E+00	0.000E+00	0.000E+00	0.000E+00	7.360E-09
BR-82	0.000E+00	0.000E+00	0.000E+00	0.000E+00	0.000E+00	0.000E+00	0.000E+00
BR-83	0.000E+00	0.000E+00	0.000E+00	0.000E+00	0.000E+00	0.000E+00	0.000E+00
BR-84	0.000E+00	0.000E+00	0.000E+00	0.000E+00	0.000E+00	0.000E+00	0.000E+00
BR-85	0.000E+00	0.000E+00	0.000E+00	0.000E+00	0.000E+00	0.000E+00	0.000E+00
RB-86	0.000E+00	2.220E+10	1.100E+10	0.000E+00	0.000E+00	0.000E+00	5.690E+08
RB-88	0.000E+00	0.000E+00	0.000E+00	0.000E+00	0.000E+00	0.000E+00	0.000E+00
RB-89	0.000E+00	0.000E+00	0.000E+00	0.000E+00	0.000E+00	0.000E+00	0.000E+00
SR-89	1.260E+10	0.000E+00	3.610E+08	0.000E+00	0.000E+00	0.000E+00	2.590E+08
SR-90	1.220E+11	0.000E+00	3.100E+10	0.000E+00	0.000E+00	0.000E+00	1.520E+09
SR-91	2.940E+05	0.000E+00	1.060E+04	0.000E+00	0.000E+00	0.000E+00	3.480E+05
SR-92	4.650E+00	0.000E+00	1.730E-01	0.000E+00	0.000E+00	0.000E+00	5.010E+01
Y-90	6.800E+02	0.000E+00	1.820E+01	0.000E+00	0.000E+00	0.000E+00	9.390E+05
Y-91M	0.000E+00	0.000E+00	0.000E+00	0.000E+00	0.000E+00	0.000E+00	0.000E+00
Y-91	7.330E+04	0.000E+00	1.950E+03	0.000E+00	0.000E+00	0.000E+00	5.260E+06
Y-92	5.220E-04	0.000E+00	1.470E-05	0.000E+00	0.000E+00	0.000E+00	9.970E+00
Y-93	2.250E+00	0.000E+00	6.130E-02	0.000E+00	0.000E+00	0.000E+00	1.780E+04

Attachment 12
Gaseous Effluent Pathway Dose Factors

GRASS-COW-MILK DOSE FACTORS
INFANT
(m^2 *mrem/yr per uCi/sec)

Nuclide	Bone	Liver	Tbody	Thyroid	Kidney	Lung	Gltract
ZR-95	6.830E+03	1.660E+03	1.180E+03	0.000E+00	1.790E+03	0.000E+00	8.280E+05
ZR-97	3.990E+00	6.850E-01	3.130E-01	0.000E+00	6.910E-01	0.000E+00	4.370E+04
NB-95	5.930E+05	2.440E+05	1.410E+05	0.000E+00	1.750E+05	0.000E+00	2.060E+08
NB-97	0.000E+00	0.000E+00	0.000E+00	0.000E+00	0.000E+00	0.000E+00	3.700E-06
MO-99	0.000E+00	2.120E+08	4.130E+07	0.000E+00	3.170E+08	0.000E+00	6.980E+07
TC-99M	2.690E+01	5.550E+01	7.150E+02	0.000E+00	5.970E+02	2.900E+01	1.610E+04
TC-101	0.000E+00	0.000E+00	0.000E+00	0.000E+00	0.000E+00	0.000E+00	0.000E+00
RU-103	8.690E+03	0.000E+00	2.910E+03	0.000E+00	1.810E+04	0.000E+00	1.060E+05
RU-105	8.060E-03	0.000E+00	2.710E-03	0.000E+00	5.920E-02	0.000E+00	3.210E+00
RU-106	1.900E+05	0.000E+00	2.380E+04	0.000E+00	2.250E+05	0.000E+00	1.440E+06
RH-103M	0.000E+00	0.000E+00	0.000E+00	0.000E+00	0.000E+00	0.000E+00	0.000E+00
RH-106	0.000E+00	0.000E+00	0.000E+00	0.000E+00	0.000E+00	0.000E+00	0.000E+00
AG-110M	3.860E+08	2.820E+08	1.860E+08	0.000E+00	4.030E+08	0.000E+00	1.460E+10
SB-122	6.400E+05	6.670E+05	8.080E+06	1.060E+05	3.150E+05	1.370E+05	7.950E+07
SB-124	6.980E+09	1.030E+08	2.160E+09	1.850E+07	0.000E+00	4.370E+09	2.150E+10
SB-125	4.980E+09	4.820E+07	1.020E+09	6.240E+06	0.000E+00	3.130E+09	6.640E+09
TE-125M	1.510E+08	5.040E+07	2.040E+07	5.070E+07	0.000E+00	0.000E+00	7.180E+07
TE-127M	4.210E+08	1.400E+08	5.100E+07	1.220E+08	1.040E+09	0.000E+00	1.700E+08
TE-127	6.500E+03	2.180E+03	1.400E+03	5.290E+03	1.590E+04	0.000E+00	1.360E+05
TE-129M	5.590E+08	1.920E+08	8.620E+07	2.150E+08	1.400E+09	0.000E+00	3.340E+08
TE-129	2.080E-09	0.000E+00	0.000E+00	1.750E-09	5.180E-09	0.000E+00	1.660E-07
TE-131M	3.380E+06	1.360E+06	1.120E+06	2.760E+06	9.350E+06	0.000E+00	2.290E+07
TE-131	0.000E+00	0.000E+00	0.000E+00	0.000E+00	0.000E+00	0.000E+00	0.000E+00
TE-132	2.100E+07	1.040E+07	9.720E+06	1.540E+07	6.510E+07	0.000E+00	3.850E+07
I-130	3.600E+06	7.920E+06	3.180E+06	8.880E+08	8.700E+06	0.000E+00	1.700E+06
I-131	2.720E+09	3.210E+09	1.410E+09	1.050E+12	3.750E+09	0.000E+00	1.150E+08
I-132	1.420E+00	2.890E+00	1.030E+00	1.350E+02	3.220E+00	0.000E+00	2.340E+00
I-133	3.720E+07	5.410E+07	1.580E+07	9.840E+09	6.360E+07	0.000E+00	9.160E+06
I-134	0.000E+00	0.000E+00	0.000E+00	1.010E-09	0.000E+00	0.000E+00	0.000E+00
I-135	1.210E+05	2.410E+05	8.800E+04	2.160E+07	2.690E+05	0.000E+00	8.740E+04
CS-134	3.650E+10	6.800E+10	6.870E+09	0.000E+00	1.750E+10	7.180E+09	1.850E+08
CS-136	1.960E+09	5.770E+09	2.150E+09	0.000E+00	2.300E+09	4.700E+08	8.760E+07
CS-137	5.150E+10	6.020E+10	4.270E+09	0.000E+00	1.620E+10	6.550E+09	1.880E+08
CS-138	0.000E+00	0.000E+00	0.000E+00	0.000E+00	0.000E+00	0.000E+00	0.000E+00

Attachment 12
Gaseous Effluent Pathway Dose Factors

GRASS-COW-MILK DOSE FACTORS
INFANT
(m^2 *mrem/yr per uCi/sec)

Nuclide	Bone	Liver	Tbody	Thyroid	Kidney	Lung	Gitract
BA-139	4.550E-07	0.000E+00	1.320E-08	0.000E+00	0.000E+00	0.000E+00	2.880E-05
BA-140	2.410E+08	2.410E+05	1.240E+07	0.000E+00	5.730E+04	1.480E+05	5.920E+07
BA-141	0.000E+00	0.000E+00	0.000E+00	0.000E+00	0.000E+00	0.000E+00	0.000E+00
BA-142	0.000E+00	0.000E+00	0.000E+00	0.000E+00	0.000E+00	0.000E+00	0.000E+00
LA-140	4.030E+01	1.590E+01	4.090E+00	0.000E+00	0.000E+00	0.000E+00	1.870E+05
LA-142	0.000E+00	0.000E+00	0.000E+00	0.000E+00	0.000E+00	0.000E+00	5.210E-06
CE-141	4.330E+04	2.640E+04	3.110E+03	0.000E+00	8.150E+03	0.000E+00	1.370E+07
CE-143	4.000E+02	2.650E+05	3.020E+01	0.000E+00	7.720E+01	0.000E+00	1.550E+06
CE-144	2.330E+06	9.520E+05	1.300E+05	0.000E+00	3.850E+05	0.000E+00	1.330E+08
PR-143	1.490E+03	5.590E+02	7.410E+01	0.000E+00	2.080E+02	0.000E+00	7.890E+05
PR-144	0.000E+00	0.000E+00	0.000E+00	0.000E+00	0.000E+00	0.000E+00	0.000E+00
ND-147	8.820E+02	9.060E+02	5.550E+01	0.000E+00	3.490E+02	0.000E+00	5.740E+05
EU-154	1.080E+05	1.500E+04	9.010E+03	0.000E+00	4.070E+04	0.000E+00	1.880E+06
EU-155	2.210E+04	2.550E+03	1.320E+03	0.000E+00	5.710E+03	0.000E+00	3.410E+06
W-187	6.120E+04	4.260E+04	1.470E+04	0.000E+00	0.000E+00	0.000E+00	2.500E+06
NP-239	3.640E+01	3.250E+00	1.840E+00	0.000E+00	6.490E+00	0.000E+00	9.400E+04

Attachment 12
Gaseous Effluent Pathway Dose Factors

GRASS-GOAT-MILK DOSE FACTORS
ADULT
(m^2 *mrem/yr per uCi/sec)

Nuclide	Bone	Liver	Tbody	Thyroid	Kidney	Lung	Gitract
H-3	0.000E+00	1.560E+03	1.560E+03	1.560E+03	1.560E+03	1.560E+03	1.560E+03
C-14	3.630E+05	7.260E+04	7.260E+04	7.260E+04	7.260E+04	7.260E+04	7.260E+04
NA-24	3.050E+05	3.050E+05	3.050E+05	3.050E+05	3.050E+05	3.050E+05	3.050E+05
P-32	2.050E+10	1.270E+09	7.930E+08	0.000E+00	0.000E+00	0.000E+00	2.310E+09
CR-51	0.000E+00	0.000E+00	3.430E+03	2.050E+03	7.560E+02	4.560E+03	8.640E+05
MN-54	0.000E+00	1.010E+06	1.920E+05	0.000E+00	3.000E+05	0.000E+00	3.090E+06
MN-56	0.000E+00	5.080E-04	9.010E-05	0.000E+00	6.450E-04	0.000E+00	1.620E-02
FE-55	3.260E+05	2.250E+05	5.260E+04	0.000E+00	0.000E+00	1.260E+05	1.290E+05
FE-59	3.870E+05	9.090E+05	3.490E+05	0.000E+00	0.000E+00	2.540E+05	3.030E+06
CO-57	0.000E+00	1.540E+05	2.550E+05	0.000E+00	0.000E+00	0.000E+00	3.900E+06
CO-58	0.000E+00	5.660E+05	1.270E+06	0.000E+00	0.000E+00	0.000E+00	1.150E+07
CO-60	0.000E+00	1.970E+06	4.340E+06	0.000E+00	0.000E+00	0.000E+00	3.700E+07
NI-63	8.070E+08	5.600E+07	2.710E+07	0.000E+00	0.000E+00	0.000E+00	1.170E+07
NI-65	4.440E-02	5.770E-03	2.630E-03	0.000E+00	0.000E+00	0.000E+00	1.460E-01
CU-64	0.000E+00	2.690E+03	1.260E+03	0.000E+00	6.770E+03	0.000E+00	2.290E+05
ZN-65	1.650E+08	5.240E+08	2.370E+08	0.000E+00	3.500E+08	0.000E+00	3.300E+08
ZN-69	0.000E+00	0.000E+00	0.000E+00	0.000E+00	0.000E+00	0.000E+00	0.000E+00
BR-82	0.000E+00	0.000E+00	3.900E+06	0.000E+00	0.000E+00	0.000E+00	4.470E+06
BR-83	0.000E+00	0.000E+00	1.240E-02	0.000E+00	0.000E+00	0.000E+00	1.790E-02
BR-84	0.000E+00	0.000E+00	0.000E+00	0.000E+00	0.000E+00	0.000E+00	0.000E+00
BR-85	0.000E+00	0.000E+00	0.000E+00	0.000E+00	0.000E+00	0.000E+00	0.000E+00
RB-86	0.000E+00	3.110E+08	1.450E+08	0.000E+00	0.000E+00	0.000E+00	6.140E+07
RB-88	0.000E+00	0.000E+00	0.000E+00	0.000E+00	0.000E+00	0.000E+00	0.000E+00
RB-89	0.000E+00	0.000E+00	0.000E+00	0.000E+00	0.000E+00	0.000E+00	0.000E+00
SR-89	3.050E+09	0.000E+00	8.740E+07	0.000E+00	0.000E+00	0.000E+00	4.890E+08
SR-90	9.830E+10	0.000E+00	2.410E+10	0.000E+00	0.000E+00	0.000E+00	2.840E+09
SR-91	6.580E+04	0.000E+00	2.660E+03	0.000E+00	0.000E+00	0.000E+00	3.130E+05
SR-92	1.030E+00	0.000E+00	4.440E-02	0.000E+00	0.000E+00	0.000E+00	2.030E+01
Y-90	8.480E+00	0.000E+00	2.280E-01	0.000E+00	0.000E+00	0.000E+00	8.990E+04
Y-91M	0.000E+00	0.000E+00	0.000E+00	0.000E+00	0.000E+00	0.000E+00	0.000E+00
Y-91	1.030E+03	0.000E+00	2.760E+01	0.000E+00	0.000E+00	0.000E+00	5.680E+05
Y-92	6.510E-06	0.000E+00	1.900E-07	0.000E+00	0.000E+00	0.000E+00	1.140E-01
Y-93	2.800E-02	0.000E+00	7.720E-04	0.000E+00	0.000E+00	0.000E+00	8.870E+02
ZR-95	1.140E+02	3.640E+01	2.470E+01	0.000E+00	5.710E+01	0.000E+00	1.150E+05

Attachment 12
Gaseous Effluent Pathway Dose Factors

GRASS-GOAT-MILK DOSE FACTORS
ADULT
(m^2 *mrem/yr per uCi/sec)

Nuclide	Bone	Liver	Tbody	Thyroid	Kidney	Lung	Gitract
ZR-97	5.110E-02	1.030E-02	4.710E-03	0.000E+00	1.560E-02	0.000E+00	3.190E+03
NB-95	9.900E+03	5.510E+03	2.960E+03	0.000E+00	5.440E+03	0.000E+00	3.340E+07
NB-97	0.000E+00	0.000E+00	0.000E+00	0.000E+00	0.000E+00	0.000E+00	0.000E+00
MO-99	0.000E+00	3.030E+06	5.760E+05	0.000E+00	6.860E+06	0.000E+00	7.020E+06
TC-99M	3.900E-01	1.100E+00	1.400E+01	0.000E+00	1.670E+01	5.400E-01	6.520E+02
TC-101	0.000E+00	0.000E+00	0.000E+00	0.000E+00	0.000E+00	0.000E+00	0.000E+00
RU-103	1.220E+02	0.000E+00	5.270E+01	0.000E+00	4.670E+02	0.000E+00	1.430E+04
RU-105	1.030E-04	0.000E+00	4.060E-05	0.000E+00	1.330E-03	0.000E+00	6.290E-02
RU-106	2.450E+03	0.000E+00	3.100E+02	0.000E+00	4.730E+03	0.000E+00	1.580E+05
RH-103M	0.000E+00	0.000E+00	0.000E+00	0.000E+00	0.000E+00	0.000E+00	0.000E+00
RH-106	0.000E+00	0.000E+00	0.000E+00	0.000E+00	0.000E+00	0.000E+00	0.000E+00
AG-110M	6.990E+06	6.470E+06	3.840E+06	0.000E+00	1.270E+07	0.000E+00	2.640E+09
SB-122	7.210E+04	7.520E+04	9.110E+05	1.200E+04	3.550E+04	1.550E+04	8.960E+06
SB-124	3.090E+06	5.840E+04	1.220E+06	7.490E+03	0.000E+00	2.410E+06	8.770E+07
SB-125	2.450E+06	2.740E+04	5.840E+05	2.490E+03	0.000E+00	1.890E+06	2.700E+07
TE-125M	1.950E+06	7.080E+05	2.620E+05	5.880E+05	7.950E+06	0.000E+00	7.810E+06
TE-127M	5.490E+06	1.960E+06	6.690E+05	1.400E+06	2.230E+07	0.000E+00	1.840E+07
TE-127	8.060E+01	2.890E+01	1.740E+01	5.970E+01	3.280E+02	0.000E+00	6.360E+03
TE-129M	7.250E+06	2.710E+06	1.150E+06	2.490E+06	3.030E+07	0.000E+00	3.650E+07
TE-129	0.000E+00	0.000E+00	0.000E+00	0.000E+00	0.000E+00	0.000E+00	0.000E+00
TE-131M	4.330E+04	2.120E+04	1.770E+04	3.360E+04	2.150E+05	0.000E+00	2.100E+06
TE-131	0.000E+00	0.000E+00	0.000E+00	0.000E+00	0.000E+00	0.000E+00	0.000E+00
TE-132	2.870E+05	1.860E+05	1.740E+05	2.050E+05	1.790E+06	0.000E+00	8.790E+06
I-130	5.110E+05	1.510E+06	5.950E+05	1.280E+08	2.350E+06	0.000E+00	1.300E+06
I-131	3.560E+08	5.090E+08	2.920E+08	1.670E+11	8.720E+08	0.000E+00	1.340E+08
I-132	1.960E-01	5.250E-01	1.840E-01	1.840E+01	8.360E-01	0.000E+00	9.860E-02
I-133	4.760E+06	8.280E+06	2.520E+06	1.220E+09	1.440E+07	0.000E+00	7.440E+06
I-134	0.000E+00	0.000E+00	0.000E+00	0.000E+00	0.000E+00	0.000E+00	0.000E+00
I-135	1.670E+04	4.360E+04	1.610E+04	2.880E+06	6.990E+04	0.000E+00	4.920E+04
CS-134	1.700E+10	4.030E+10	3.300E+10	0.000E+00	1.310E+10	4.330E+09	7.060E+08
CS-136	7.840E+08	3.090E+09	2.230E+09	0.000E+00	1.720E+09	2.360E+08	3.520E+08
CS-137	2.210E+10	3.030E+10	1.980E+10	0.000E+00	1.030E+10	3.420E+09	5.860E+08
CS-138	0.000E+00	0.000E+00	0.000E+00	0.000E+00	0.000E+00	0.000E+00	0.000E+00

Attachment 12
Gaseous Effluent Pathway Dose Factors

GRASS-GOAT-MILK DOSE FACTORS
ADULT
(m^2 *mrem/yr per uCi/sec)

Nuclide	Bone	Liver	Tbody	Thyroid	Kidney	Lung	Gitract
BA-139	5.640E-09	0.000E+00	0.000E+00	0.000E+00	0.000E+00	0.000E+00	1.000E-08
BA-140	3.230E+06	4.050E+03	2.110E+05	0.000E+00	1.380E+03	2.320E+03	6.650E+06
BA-141	0.000E+00	0.000E+00	0.000E+00	0.000E+00	0.000E+00	0.000E+00	0.000E+00
BA-142	0.000E+00	0.000E+00	0.000E+00	0.000E+00	0.000E+00	0.000E+00	0.000E+00
LA-140	5.380E-01	2.710E-01	1.990E+04	0.000E+00	0.000E+00	0.000E+00	1.990E+04
LA-142	0.000E+00	0.000E+00	0.000E+00	0.000E+00	0.000E+00	0.000E+00	3.640E-09
CE-141	5.810E+02	3.930E+02	4.450E+01	0.000E+00	1.820E+02	0.000E+00	1.500E+06
CE-143	5.020E+00	3.710E+03	4.110E-01	0.000E+00	1.630E+00	0.000E+00	1.390E+05
CE-144	4.290E+04	1.790E+04	2.300E+03	0.000E+00	1.060E+04	0.000E+00	1.450E+07
PR-143	1.910E+01	7.650E+00	9.450E-01	0.000E+00	4.410E+00	0.000E+00	8.350E+04
PR-144	0.000E+00	0.000E+00	0.000E+00	0.000E+00	0.000E+00	0.000E+00	0.000E+00
ND-147	1.130E+01	1.310E+01	7.820E-01	0.000E+00	7.640E+00	0.000E+00	6.270E+04
EU-154	2.840E+03	3.490E+02	2.480E+02	0.000E+00	1.670E+03	0.000E+00	2.530E+05
EU-155	3.950E+02	5.610E+01	3.620E+01	0.000E+00	2.590E+02	0.000E+00	4.410E+04
W-187	7.870E+02	6.580E+02	2.300E+02	0.000E+00	0.000E+00	0.000E+00	2.160E+05
NP-239	4.390E-01	4.320E-02	2.380E-02	0.000E+00	1.350E-01	0.000E+00	8.860E+03

Attachment 12
Gaseous Effluent Pathway Dose Factors

GRASS-GOAT-MILK DOSE FACTORS
TEEN
(m^2 *mrem/yr per uCi/sec)

Nuclide	Bone	Liver	Tbody	Thyroid	Kidney	Lung	Gitract
H-3	0.000E+00	2.030E+03	2.030E+03	2.030E+03	2.030E+03	2.030E+03	2.030E+03
C-14	6.700E+05	1.340E+05	1.340E+05	1.340E+05	1.340E+05	1.340E+05	1.340E+05
NA-24	5.330E+05	5.330E+05	5.330E+05	5.330E+05	5.330E+05	5.330E+05	5.330E+05
P-32	3.780E+10	2.340E+09	1.470E+09	0.000E+00	0.000E+00	0.000E+00	3.180E+09
CR-51	0.000E+00	0.000E+00	6.000E+03	3.330E+03	1.310E+03	8.560E+03	1.010E+06
MN-54	0.000E+00	1.680E+06	3.330E+05	0.000E+00	5.010E+05	0.000E+00	3.440E+06
MN-56	0.000E+00	9.010E-04	1.600E-04	0.000E+00	1.140E-03	0.000E+00	5.930E-02
FE-55	5.790E+05	4.100E+05	9.570E+04	0.000E+00	0.000E+00	2.600E+05	1.780E+05
FE-59	6.750E+05	1.580E+06	6.090E+05	0.000E+00	0.000E+00	4.970E+05	3.730E+06
CO-57	0.000E+00	2.690E+05	4.520E+05	0.000E+00	0.000E+00	0.000E+00	5.030E+06
CO-58	0.000E+00	9.540E+05	2.200E+06	0.000E+00	0.000E+00	0.000E+00	1.310E+07
CO-60	0.000E+00	3.340E+06	7.510E+06	0.000E+00	0.000E+00	0.000E+00	4.350E+07
NI-63	1.420E+09	1.000E+08	4.810E+07	0.000E+00	0.000E+00	0.000E+00	1.590E+07
NI-65	8.130E-02	1.040E-02	4.730E-03	0.000E+00	0.000E+00	0.000E+00	5.640E-01
CU-64	0.000E+00	4.790E+03	2.250E+03	0.000E+00	1.210E+04	0.000E+00	3.710E+05
ZN-65	2.530E+08	8.780E+08	4.090E+08	0.000E+00	5.620E+08	0.000E+00	3.720E+08
ZN-69	0.000E+00	0.000E+00	0.000E+00	0.000E+00	0.000E+00	0.000E+00	0.000E+00
BR-82	0.000E+00	0.000E+00	6.670E+06	0.000E+00	0.000E+00	0.000E+00	0.000E+00
BR-83	0.000E+00	0.000E+00	2.290E-02	0.000E+00	0.000E+00	0.000E+00	0.000E+00
BR-84	0.000E+00	0.000E+00	0.000E+00	0.000E+00	0.000E+00	0.000E+00	0.000E+00
BR-85	0.000E+00	0.000E+00	0.000E+00	0.000E+00	0.000E+00	0.000E+00	0.000E+00
RB-86	0.000E+00	5.670E+08	2.670E+08	0.000E+00	0.000E+00	0.000E+00	8.400E+07
RB-88	0.000E+00	0.000E+00	0.000E+00	0.000E+00	0.000E+00	0.000E+00	0.000E+00
RB-89	0.000E+00	0.000E+00	0.000E+00	0.000E+00	0.000E+00	0.000E+00	0.000E+00
SR-89	5.620E+09	0.000E+00	1.160E+08	0.000E+00	0.000E+00	0.000E+00	6.690E+08
SR-90	1.390E+11	0.000E+00	3.430E+11	0.000E+00	0.000E+00	0.000E+00	3.900E+09
SR-91	1.210E+05	0.000E+00	4.810E+03	0.000E+00	0.000E+00	0.000E+00	5.480E+05
SR-92	1.880E+00	0.000E+00	8.010E-02	0.000E+00	0.000E+00	0.000E+00	4.790E+01
Y-90	1.560E+01	0.000E+00	4.200E-01	0.000E+00	0.000E+00	0.000E+00	1.290E+05
Y-91M	0.000E+00	0.000E+00	0.000E+00	0.000E+00	0.000E+00	0.000E+00	0.000E+00
Y-91	1.900E+03	0.000E+00	5.090E+01	0.000E+00	0.000E+00	0.000E+00	7.780E+05
Y-92	1.200E-05	0.000E+00	3.480E-07	0.000E+00	0.000E+00	0.000E+00	3.300E-01
Y-93	5.160E-02	0.000E+00	1.410E-03	0.000E+00	0.000E+00	0.000E+00	1.580E+03

Attachment 12
Gaseous Effluent Pathway Dose Factors

GRASS-GOAT-MILK DOSE FACTORS
TEEN
(m^2 *mrem/yr per uCi/sec)

Nuclide	Bone	Liver	Tbody	Thyroid	Kidney	Lung	Gitract
ZR-95	1.990E+02	6.260E+01	4.310E+01	0.000E+00	9.200E+01	0.000E+00	1.450E+05
ZR-97	9.300E-02	1.840E-02	8.480E-03	0.000E+00	2.790E-02	0.000E+00	4.980E+03
NB-95	1.690E+04	9.370E+03	5.160E+03	0.000E+00	9.080E+03	0.000E+00	4.010E+07
NB-97	0.000E+00	0.000E+00	0.000E+00	0.000E+00	0.000E+00	0.000E+00	7.610E-09
MO-99	0.000E+00	5.470E+06	1.040E+06	0.000E+00	1.250E+07	0.000E+00	9.800E+06
TC-99M	6.770E-01	1.890E+00	2.450E+01	0.000E+00	2.810E+01	1.050E+00	1.240E+03
TC-101	0.000E+00	0.000E+00	0.000E+00	0.000E+00	0.000E+00	0.000E+00	0.000E+00
RU-103	2.180E+02	0.000E+00	9.310E+01	0.000E+00	7.670E+02	0.000E+00	1.820E+04
RU-105	1.880E-04	0.000E+00	7.290E-05	0.000E+00	2.370E-03	0.000E+00	1.520E-01
RU-106	4.500E+03	0.000E+00	5.670E+02	0.000E+00	8.680E+03	0.000E+00	2.160E+05
RH-103M	0.000E+00	0.000E+00	0.000E+00	0.000E+00	0.000E+00	0.000E+00	0.000E+00
RH-106	0.000E+00	0.000E+00	0.000E+00	0.000E+00	0.000E+00	0.000E+00	0.000E+00
AG-110M	1.160E+07	1.090E+07	6.650E+06	0.000E+00	2.090E+07	0.000E+00	3.070E+09
SB-122	9.310E+04	9.710E+04	1.180E+06	1.540E+04	4.580E+04	2.000E+04	1.160E+07
SB-124	5.510E+06	1.020E+05	2.150E+06	1.250E+04	0.000E+00	4.810E+06	1.110E+08
SB-125	4.380E+06	4.790E+04	1.030E+06	4.190E+03	0.000E+00	3.850E+06	3.410E+07
TE-125M	3.600E+06	1.300E+06	4.820E+05	1.010E+06	0.000E+00	0.000E+00	1.060E+07
TE-127M	1.010E+07	3.590E+06	1.200E+06	2.410E+06	4.100E+07	0.000E+00	2.520E+07
TE-127	1.490E+02	5.290E+01	3.210E+01	1.030E+02	6.050E+02	0.000E+00	1.150E+04
TE-129M	1.330E+07	4.920E+06	2.100E+06	4.280E+06	5.550E+07	0.000E+00	4.980E+07
TE-129	0.000E+00	0.000E+00	0.000E+00	0.000E+00	0.000E+00	0.000E+00	0.000E+00
TE-131M	7.890E+04	3.780E+04	3.150E+04	5.690E+04	3.940E+05	0.000E+00	3.030E+06
TE-131	0.000E+00	0.000E+00	0.000E+00	0.000E+00	0.000E+00	0.000E+00	0.000E+00
TE-132	5.130E+05	3.250E+05	3.060E+05	3.430E+05	3.120E+06	0.000E+00	1.030E+07
I-130	8.990E+05	2.600E+06	1.040E+06	2.120E+08	4.010E+06	0.000E+00	2.000E+06
I-131	6.450E+08	9.030E+08	4.850E+08	2.640E+11	1.560E+09	0.000E+00	1.790E+08
I-132	3.480E-01	9.110E-01	3.270E-01	3.070E+01	1.430E+00	0.000E+00	3.970E-01
I-133	8.690E+06	1.470E+07	4.500E+06	2.060E+09	2.590E+07	0.000E+00	1.120E+07
I-134	0.000E+00	0.000E+00	0.000E+00	0.000E+00	0.000E+00	0.000E+00	0.000E+00
I-135	2.960E+04	7.620E+04	2.820E+04	4.900E+06	1.200E+05	0.000E+00	8.440E+04
CS-134	2.940E+10	6.930E+10	3.210E+10	0.000E+00	2.200E+10	8.410E+09	8.620E+08
CS-136	1.330E+09	5.250E+09	3.530E+09	0.000E+00	2.860E+09	4.510E+08	4.230E+08
CS-137	4.020E+10	5.340E+10	1.860E+10	0.000E+00	1.820E+10	7.060E+09	7.600E+08
CS-138	0.000E+00	0.000E+00	0.000E+00	0.000E+00	0.000E+00	0.000E+00	0.000E+00

Attachment 12
Gaseous Effluent Pathway Dose Factors

GRASS-GOAT-MILK DOSE FACTORS
TEEN
(m^2 *mrem/yr per uCi/sec)

Nuclide	Bone	Liver	Tbody	Thyroid	Kidney	Lung	Gltract
BA-139	1.040E-08	0.000E+00	0.000E+00	0.000E+00	0.000E+00	0.000E+00	9.310E-08
BA-140	5.830E+06	7.140E+03	3.750E+05	0.000E+00	2.420E+03	4.800E+03	8.980E+06
BA-141	0.000E+00	0.000E+00	0.000E+00	0.000E+00	0.000E+00	0.000E+00	0.000E+00
BA-142	0.000E+00	0.000E+00	0.000E+00	0.000E+00	0.000E+00	0.000E+00	0.000E+00
LA-140	9.760E-01	4.750E-01	1.260E-01	0.000E+00	0.000E+00	0.000E+00	2.730E+04
LA-142	1.980E-12	8.780E-13	2.190E-13	0.000E+00	0.000E+00	0.000E+00	2.670E-08
CE-141	1.060E+03	7.110E+02	8.170E+01	0.000E+00	3.350E+02	0.000E+00	2.030E+06
CE-143	9.230E+00	6.720E+03	7.500E-01	0.000E+00	3.010E+00	0.000E+00	2.020E+05
CE-144	7.900E+04	3.270E+04	4.240E+03	0.000E+00	1.950E+04	0.000E+00	1.990E+07
PR-143	3.500E+01	1.400E+01	1.740E+00	0.000E+00	8.130E+00	0.000E+00	1.150E+05
PR-144	0.000E+00	0.000E+00	0.000E+00	0.000E+00	0.000E+00	0.000E+00	0.000E+00
ND-147	2.180E+01	2.370E+01	1.420E+00	0.000E+00	1.390E+01	0.000E+00	8.530E+04
EU-154	4.700E+03	6.070E+02	4.280E+02	0.000E+00	2.720E+03	0.000E+00	3.210E+05
EU-155	1.030E+03	9.970E+01	6.170E+01	0.000E+00	3.900E+02	0.000E+00	5.710E+05
W-187	1.440E+03	1.170E+03	4.110E+02	0.000E+00	0.000E+00	0.000E+00	3.180E+05
NP-239	8.390E-01	7.910E-02	4.390E-02	0.000E+00	2.480E-01	0.000E+00	1.270E+04

Attachment 12
Gaseous Effluent Pathway Dose Factors

GRASS-GOAT-MILK DOSE FACTORS
CHILD
(m^2 *mrem/yr per uCi/sec)

Nuclide	Bone	Liver	Tbody	Thyroid	Kidney	Lung	Gitract
H-3	0.000E+00	3.200E+03	3.200E+03	3.200E+03	3.200E+03	3.200E+03	3.200E+03
C-14	1.650E+06	3.290E+05	3.290E+05	3.290E+05	3.290E+05	3.290E+05	3.290E+05
NA-24	1.110E+06	1.110E+06	1.110E+06	1.110E+06	1.110E+06	1.110E+06	1.110E+06
P-32	9.330E+10	4.370E+09	3.600E+09	0.000E+00	0.000E+00	0.000E+00	2.580E+09
CR-51	0.000E+00	0.000E+00	1.220E+04	6.790E+03	1.860E+03	1.240E+04	6.490E+05
MN-54	0.000E+00	2.510E+06	6.690E+05	0.000E+00	7.050E+05	0.000E+00	2.110E+06
MN-56	0.000E+00	1.570E-03	3.550E-04	0.000E+00	1.900E-03	0.000E+00	2.280E-01
FE-55	1.450E+06	7.700E+05	2.390E+05	0.000E+00	0.000E+00	4.360E+05	1.430E+05
FE-59	1.570E+06	2.530E+06	1.260E+06	0.000E+00	0.000E+00	7.350E+05	2.640E+06
CO-57	0.000E+00	4.600E+05	9.320E+05	0.000E+00	0.000E+00	0.000E+00	3.770E+06
CO-58	0.000E+00	1.460E+06	4.460E+06	0.000E+00	0.000E+00	0.000E+00	8.500E+06
CO-60	0.000E+00	5.180E+06	1.530E+07	0.000E+00	0.000E+00	0.000E+00	2.870E+07
NI-63	3.560E+09	1.900E+08	1.210E+08	0.000E+00	0.000E+00	0.000E+00	1.280E+07
NI-65	1.990E-01	1.870E-02	1.090E-02	0.000E+00	0.000E+00	0.000E+00	2.290E+00
CU-64	0.000E+00	8.410E+03	5.080E+03	0.000E+00	2.030E+04	0.000E+00	3.950E+05
ZN-65	4.960E+08	1.320E+09	8.220E+08	0.000E+00	8.330E+08	0.000E+00	2.320E+08
ZN-69	0.000E+00	0.000E+00	0.000E+00	0.000E+00	0.000E+00	0.000E+00	0.000E+00
BR-82	0.000E+00	0.000E+00	1.390E+07	0.000E+00	0.000E+00	0.000E+00	0.000E+00
BR-83	0.000E+00	0.000E+00	5.620E-02	0.000E+00	0.000E+00	0.000E+00	0.000E+00
BR-84	0.000E+00	0.000E+00	0.000E+00	0.000E+00	0.000E+00	0.000E+00	0.000E+00
BR-85	0.000E+00	0.000E+00	0.000E+00	0.000E+00	0.000E+00	0.000E+00	0.000E+00
RB-86	0.000E+00	1.050E+09	6.470E+08	0.000E+00	0.000E+00	0.000E+00	6.770E+07
RB-88	0.000E+00	0.000E+00	0.000E+00	0.000E+00	0.000E+00	0.000E+00	0.000E+00
RB-89	0.000E+00	0.000E+00	0.000E+00	0.000E+00	0.000E+00	0.000E+00	0.000E+00
SR-89	1.390E+10	0.000E+00	3.970E+08	0.000E+00	0.000E+00	0.000E+00	5.380E+08
SR-90	2.350E+11	0.000E+00	5.950E+10	0.000E+00	0.000E+00	0.000E+00	3.190E+09
SR-91	2.970E+05	0.000E+00	1.120E+04	0.000E+00	0.000E+00	0.000E+00	6.550E+05
SR-92	4.590E+10	0.000E+00	1.840E-01	0.000E+00	0.000E+00	0.000E+00	8.690E+01
Y-90	3.860E+01	0.000E+00	1.030E+00	0.000E+00	0.000E+00	0.000E+00	1.100E+05
Y-91M	0.000E+00	0.000E+00	0.000E+00	0.000E+00	0.000E+00	0.000E+00	0.000E+00
Y-91	4.690E+03	0.000E+00	1.250E+02	0.000E+00	0.000E+00	0.000E+00	6.250E+05
Y-92	2.950E-05	0.000E+00	8.440E-07	0.000E+00	0.000E+00	0.000E+00	8.520E-01
Y-93	1.270E-01	0.000E+00	3.480E-03	0.000E+00	0.000E+00	0.000E+00	1.890E+03
ZR-95	4.610E+02	1.010E+02	9.030E+01	0.000E+00	1.450E+02	0.000E+00	1.060E+05

Attachment 12
Gaseous Effluent Pathway Dose Factors

GRASS-GOAT-MILK DOSE FACTORS
CHILD
(m^2 *mrem/yr per uCi/sec)

Nuclide	Bone	Liver	Tbody	Thyroid	Kidney	Lung	Gitract
ZR-97	2.260E-01	3.270E-02	1.930E-02	0.000E+00	4.690E-02	0.000E+00	4.950E+03
NB-95	3.810E+04	1.480E+04	1.060E+04	0.000E+00	1.390E+04	0.000E+00	2.750E+07
NB-97	0.000E+00	0.000E+00	0.000E+00	0.000E+00	0.000E+00	0.000E+00	1.740E-07
MO-99	0.000E+00	9.950E+06	2.460E+06	0.000E+00	2.120E+07	0.000E+00	8.230E+06
TC-99M	1.550E+00	3.040E+00	5.040E+01	0.000E+00	4.420E+01	1.550E+00	1.730E+03
TC-101	0.000E+00	0.000E+00	0.000E+00	0.000E+00	0.000E+00	0.000E+00	0.000E+00
RU-103	5.150E+02	0.000E+00	1.980E+02	0.000E+00	1.300E+03	0.000E+00	1.330E+04
RU-105	4.590E-04	0.000E+00	1.660E-04	0.000E+00	4.030E-03	0.000E+00	2.990E-01
RU-106	1.110E+04	0.000E+00	1.380E+03	0.000E+00	1.500E+04	0.000E+00	1.720E+05
RH-103M	0.000E+00	0.000E+00	0.000E+00	0.000E+00	0.000E+00	0.000E+00	0.000E+00
RH-106	0.000E+00	0.000E+00	0.000E+00	0.000E+00	0.000E+00	0.000E+00	0.000E+00
AG-110M	2.510E+07	1.690E+07	1.350E+07	0.000E+00	3.150E+07	0.000E+00	2.010E+09
SB-122	7.680E+04	8.010E+04	9.700E+05	1.270E+04	3.780E+04	1.650E+04	9.540E+06
SB-124	1.300E+07	1.690E+05	4.570E+06	2.880E+04	0.000E+00	7.240E+06	8.150E+07
SB-125	1.040E+07	8.050E+04	2.190E+06	9.670E+03	0.000E+00	5.820E+06	2.490E+07
TE-125M	8.850E+06	2.400E+06	1.180E+06	2.480E+06	0.000E+00	0.000E+00	8.540E+06
TE-127M	2.500E+07	6.720E+06	2.960E+06	5.970E+06	7.120E+07	0.000E+00	2.020E+07
TE-127	3.670E+02	9.910E+01	7.880E+01	2.540E+02	1.050E+03	0.000E+00	1.440E+04
TE-129M	3.270E+07	9.130E+06	5.080E+06	1.050E+07	9.600E+07	0.000E+00	3.990E+07
TE-129	0.000E+00	0.000E+00	0.000E+00	0.000E+00	0.000E+00	0.000E+00	7.340E-09
TE-131M	1.920E+05	6.640E+04	7.070E+04	1.370E+05	6.430E+05	0.000E+00	2.690E+06
TE-131	0.000E+00	0.000E+00	0.000E+00	0.000E+00	0.000E+00	0.000E+00	0.000E+00
TE-132	1.230E+06	5.420E+05	6.550E+05	7.900E+05	5.040E+06	0.000E+00	5.460E+06
I-130	2.100E+06	4.250E+06	2.190E+06	4.680E+08	6.350E+06	0.000E+00	1.990E+06
I-131	1.570E+09	1.570E+09	8.950E+08	5.210E+11	2.580E+09	0.000E+00	1.400E+08
I-132	8.230E-01	1.510E+00	6.960E-01	7.020E+01	2.320E+00	0.000E+00	1.780E+00
I-133	2.110E+07	2.610E+07	9.880E+06	4.850E+09	4.350E+07	0.000E+00	1.050E+07
I-134	0.000E+00	0.000E+00	0.000E+00	0.000E+00	0.000E+00	0.000E+00	0.000E+00
I-135	7.000E+04	1.260E+05	5.960E+04	1.120E+07	1.930E+05	0.000E+00	9.600E+04
CS-134	6.790E+10	1.110E+11	2.350E+10	0.000E+00	3.450E+10	1.240E+10	6.010E+08
CS-136	3.010E+09	8.280E+09	5.360E+09	0.000E+00	4.410E+09	6.580E+08	2.910E+08
CS-137	9.670E+10	9.260E+10	1.370E+10	0.000E+00	3.020E+10	1.090E+10	5.800E+08
CS-138	0.000E+00	0.000E+00	0.000E+00	0.000E+00	0.000E+00	0.000E+00	0.000E+00

Attachment 12
Gaseous Effluent Pathway Dose Factors

GRASS-GOAT-MILK DOSE FACTORS
CHILD
(m^2 *mrem/yr per uCi/sec)

Nuclide	Bone	Liver	Tbody	Thyroid	Kidney	Lung	Gitract
BA-139	2.560E-08	0.000E+00	0.000E+00	0.000E+00	0.000E+00	0.000E+00	1.480E-06
BA-140	1.410E+07	1.230E+04	8.210E+05	0.000E+00	4.010E+03	7.340E+03	7.120E+06
BA-141	0.000E+00	0.000E+00	0.000E+00	0.000E+00	0.000E+00	0.000E+00	0.000E+00
BA-142	0.000E+00	0.000E+00	0.000E+00	0.000E+00	0.000E+00	0.000E+00	0.000E+00
LA-140	2.310E+00	8.090E-01	2.730E-01	0.000E+00	0.000E+00	0.000E+00	2.260E+04
LA-142	4.770E-12	1.520E-12	4.770E-13	0.000E+00	0.000E+00	0.000E+00	3.020E-07
CE-141	2.620E+03	1.310E+03	1.940E+02	0.000E+00	5.730E+02	0.000E+00	1.630E+06
CE-143	2.270E+01	1.230E+04	1.780E+00	0.000E+00	5.150E+00	0.000E+00	1.800E+05
CE-144	1.950E+05	6.100E+04	1.040E+04	0.000E+00	3.380E+04	0.000E+00	1.590E+07
PR-143	8.670E+01	2.600E+01	4.300E+00	0.000E+00	1.410E+01	0.000E+00	9.350E+04
PR-144	0.000E+00	0.000E+00	0.000E+00	0.000E+00	0.000E+00	0.000E+00	0.000E+00
ND-147	5.340E+01	4.320E+01	3.350E+00	0.000E+00	2.370E+01	0.000E+00	6.850E+04
EU-154	1.130E+04	1.020E+03	9.290E+02	0.000E+00	4.470E+03	0.000E+00	2.360E+05
EU-155	2.360E+03	1.700E+02	1.330E+02	0.000E+00	6.630E+02	0.000E+00	4.250E+05
W-187	3.490E+03	2.070E+03	9.270E+02	0.000E+00	0.000E+00	0.000E+00	2.900E+05
NP-239	2.060E+00	1.480E-01	1.040E-01	0.000E+00	4.280E-01	0.000E+00	1.100E+04

Attachment 12
Gaseous Effluent Pathway Dose Factors

GRASS-GOAT-MILK DOSE FACTORS
INFANT
(m^2 *mrem/yr per uCi/sec)

Nuclide	Bone	Liver	Tbody	Thyroid	Kidney	Lung	Gitract
H-3	0.000E+00	4.860E+03	4.860E+03	4.860E+03	4.860E+03	4.860E+03	4.860E+03
C-14	3.230E+06	6.890E+05	6.890E+05	6.890E+05	6.890E+05	6.890E+05	6.890E+05
NA-24	1.930E+06	1.930E+06	1.930E+06	1.930E+06	1.930E+06	1.930E+06	1.930E+06
P-32	1.920E+11	1.130E+10	7.450E+09	0.000E+00	0.000E+00	0.000E+00	2.600E+09
CR-51	0.000E+00	0.000E+00	1.940E+04	1.260E+04	2.760E+03	2.460E+04	5.650E+05
MN-54	0.000E+00	4.670E+06	1.060E+06	0.000E+00	1.040E+06	0.000E+00	1.720E+06
MN-56	0.000E+00	3.850E-03	6.630E-04	0.000E+00	3.310E-03	0.000E+00	3.490E-01
FE-55	1.760E+06	1.130E+06	3.030E+05	0.000E+00	0.000E+00	5.540E+05	1.440E+05
FE-59	2.920E+06	5.110E+06	2.010E+06	0.000E+00	0.000E+00	1.510E+06	2.440E+06
CO-57	0.000E+00	1.070E+06	1.750E+06	0.000E+00	0.000E+00	0.000E+00	3.660E+06
CO-58	0.000E+00	2.910E+06	7.270E+06	0.000E+00	0.000E+00	0.000E+00	7.260E+06
CO-60	0.000E+00	1.060E+07	2.500E+07	0.000E+00	0.000E+00	0.000E+00	2.520E+07
NI-63	4.190E+09	2.590E+08	1.450E+08	0.000E+00	0.000E+00	0.000E+00	1.290E+07
NI-65	4.210E-01	4.770E-02	2.170E-02	0.000E+00	0.000E+00	0.000E+00	3.630E+00
CU-64	0.000E+00	2.090E+04	9.680E+03	0.000E+00	3.540E+04	0.000E+00	4.290E+05
ZN-65	6.660E+08	2.280E+09	1.050E+09	0.000E+00	1.110E+09	0.000E+00	1.930E+09
ZN-69	0.000E+00	0.000E+00	0.000E+00	0.000E+00	0.000E+00	0.000E+00	0.000E+00
BR-82	0.000E+00	0.000E+00	2.330E+07	0.000E+00	0.000E+00	0.000E+00	0.000E+00
BR-83	0.000E+00	0.000E+00	1.190E-01	0.000E+00	0.000E+00	0.000E+00	0.000E+00
BR-84	0.000E+00	0.000E+00	0.000E+00	0.000E+00	0.000E+00	0.000E+00	0.000E+00
BR-85	0.000E+00	0.000E+00	0.000E+00	0.000E+00	0.000E+00	0.000E+00	0.000E+00
RB-86	0.000E+00	2.670E+09	1.320E+09	0.000E+00	0.000E+00	0.000E+00	6.830E+07
RB-88	0.000E+00	0.000E+00	0.000E+00	0.000E+00	0.000E+00	0.000E+00	0.000E+00
RB-89	0.000E+00	0.000E+00	0.000E+00	0.000E+00	0.000E+00	0.000E+00	0.000E+00
SR-89	2.640E+10	0.000E+00	7.580E+08	0.000E+00	0.000E+00	0.000E+00	5.430E+08
SR-90	2.550E+11	0.000E+00	6.500E+10	0.000E+00	0.000E+00	0.000E+00	3.190E+09
SR-91	6.180E+05	0.000E+00	2.240E+04	0.000E+00	0.000E+00	0.000E+00	7.310E+05
SR-92	9.760E+00	0.000E+00	3.620E-01	0.000E+00	0.000E+00	0.000E+00	1.050E+02
Y-90	8.160E+01	0.000E+00	2.190E+00	0.000E+00	0.000E+00	0.000E+00	1.130E+05
Y-91M	0.000E+00	0.000E+00	0.000E+00	0.000E+00	0.000E+00	0.000E+00	0.000E+00
Y-91	8.800E+03	0.000E+00	2.340E+02	0.000E+00	0.000E+00	0.000E+00	6.310E+05
Y-92	6.270E-05	0.000E+00	1.760E-06	0.000E+00	0.000E+00	0.000E+00	1.200E+10
Y-93	2.700E-01	0.000E+00	7.350E-03	0.000E+00	0.000E+00	0.000E+00	2.130E+03
ZR-95	8.190E+02	2.000E+02	1.420E+02	0.000E+00	2.150E+02	0.000E+00	9.940E+00

Attachment 12
Gaseous Effluent Pathway Dose Factors

GRASS-GOAT-MILK DOSE FACTORS
INFANT
(m^2 *mrem/yr per uCi/sec)

Nuclide	Bone	Liver	Tbody	Thyroid	Kidney	Lung	Gitract
ZR-97	4.790E-01	8.220E-02	3.760E-02	0.000E+00	8.290E-02	0.000E+00	5.240E+03
NB-95	7.120E+04	2.930E+04	1.690E+04	0.000E+00	2.100E+04	0.000E+00	2.470E+07
NB-97	6.590E-12	1.410E-12	5.070E-13	0.000E+00	1.100E-12	0.000E+00	4.440E-07
MO-99	0.000E+00	2.540E+07	4.960E+06	0.000E+00	3.800E+07	0.000E+00	8.830E+06
TC-99M	3.230E+00	6.660E+00	8.570E+01	0.000E+00	7.160E+01	3.480E+00	1.930E+03
TC-101	0.000E+00	0.000E+00	0.000E+00	0.000E+00	0.000E+00	0.000E+00	0.000E+00
RU-103	1.040E+03	0.000E+00	3.490E+02	0.000E+00	2.170E+03	0.000E+00	1.270E+04
RU-105	9.670E-04	0.000E+00	3.260E-04	0.000E+00	7.110E-03	0.000E+00	3.850E-01
RU-106	2.280E+04	0.000E+00	2.850E+03	0.000E+00	2.700E+04	0.000E+00	1.730E+05
RH-103M	0.000E+00	0.000E+00	0.000E+00	0.000E+00	0.000E+00	0.000E+00	0.000E+00
RH-106	0.000E+00	0.000E+00	0.000E+00	0.000E+00	0.000E+00	0.000E+00	0.000E+00
AG-110M	4.630E+07	3.380E+07	2.240E+07	0.000E+00	4.840E+07	0.000E+00	1.750E+09
SB-122	7.680E+04	8.010E+04	9.700E+05	1.270E+04	3.780E+04	1.650E+04	9.540E+06
SB-124	2.510E+07	3.700E+05	7.790E+06	6.670E+04	0.000E+00	1.570E+07	7.750E+07
SB-125	1.790E+07	1.740E+05	3.690E+06	2.250E+04	0.000E+00	1.130E+07	2.390E+07
TE-125M	1.810E+07	6.050E+06	2.450E+06	6.090E+06	0.000E+00	0.000E+00	8.620E+06
TE-127M	5.050E+07	1.680E+07	6.120E+06	1.460E+07	1.240E+08	0.000E+00	2.040E+07
TE-127	7.800E+02	2.610E+02	1.680E+02	6.350E+02	1.900E+03	0.000E+00	1.640E+04
TE-129M	6.710E+07	2.300E+07	1.030E+07	2.580E+07	1.680E+08	0.000E+00	4.010E+07
TE-129	0.000E+00	0.000E+00	0.000E+00	0.000E+00	0.000E+00	0.000E+00	2.000E-08
TE-131M	4.050E+05	1.630E+05	1.350E+05	3.310E+00	1.120E+06	0.000E+00	2.750E+06
TE-131	0.000E+00	0.000E+00	0.000E+00	0.000E+00	0.000E+00	0.000E+00	0.000E+00
TE-132	2.520E+06	1.250E+06	1.170E+06	1.840E+06	7.820E+06	0.000E+00	4.620E+06
I-130	4.320E+06	9.510E+06	3.820E+06	1.070E+09	1.040E+07	0.000E+00	2.040E+06
I-131	3.270E+09	3.850E+09	1.690E+09	1.270E+12	4.500E+09	0.000E+00	1.370E+08
I-132	1.710E+00	3.470E+00	1.230E+00	1.630E+02	3.870E+00	0.000E+00	2.810E+00
I-133	4.460E+07	6.490E+07	1.900E+07	1.180E+10	7.630E+07	0.000E+00	1.100E+07
I-134	0.000E+00	0.000E+00	0.000E+00	1.210E-09	0.000E+00	0.000E+00	0.000E+00
I-135	1.460E+05	2.900E+05	1.060E+05	2.600E+07	3.230E+05	0.000E+00	1.050E+05
CS-134	1.090E+11	2.040E+11	2.060E+10	0.000E+00	5.250E+10	2.150E+10	5.540E+08
CS-136	5.880E+09	1.730E+10	6.460E+09	0.000E+00	6.900E+09	1.410E+09	2.630E+08
CS-137	1.540E+11	1.810E+11	1.280E+10	0.000E+00	4.850E+10	1.960E+10	5.650E+08
CS-138	0.000E+00	0.000E+00	0.000E+00	0.000E+00	0.000E+00	0.000E+00	0.000E+00

Attachment 12
Gaseous Effluent Pathway Dose Factors

GRASS-GOAT-MILK DOSE FACTORS
INFANT
(m^2 *mrem/yr per uCi/sec)

Nuclide	Bone	Liver	Tbody	Thyroid	Kidney	Lung	Gitract
BA-139	5.450E-08	0.000E+00	1.580E-09	0.000E+00	0.000E+00	0.000E+00	3.450E-06
BA-140	2.890E+07	2.890E+04	1.490E+06	0.000E+00	6.870E+03	1.780E+04	7.110E+06
BA-141	0.000E+00	0.000E+00	0.000E+00	0.000E+00	0.000E+00	0.000E+00	0.000E+00
BA-142	0.000E+00	0.000E+00	0.000E+00	0.000E+00	0.000E+00	0.000E+00	0.000E+00
LA-140	4.840E+00	1.910E+00	4.900E-01	0.000E+00	0.000E+00	0.000E+00	2.240E+04
LA-142	0.000E+00	0.000E+00	0.000E+00	0.000E+00	0.000E+00	0.000E+00	0.000E+00
CE-141	5.200E+03	3.170E+03	3.730E+02	0.000E+00	9.780E+02	0.000E+00	1.640E+06
CE-143	4.800E+01	3.180E+04	3.630E+00	0.000E+00	9.270E+00	0.000E+00	1.860E+05
CE-144	2.790E+05	1.140E+05	1.560E+04	0.000E+00	4.620E+04	0.000E+00	1.600E+07
PR-143	1.790E+02	6.710E+01	8.890E+00	0.000E+00	2.490E+01	0.000E+00	9.470E+04
PR-144	0.000E+00	0.000E+00	0.000E+00	0.000E+00	0.000E+00	0.000E+00	0.000E+00
ND-147	1.060E+02	1.090E+02	6.660E+00	0.000E+00	4.190E+01	0.000E+00	6.890E+04
EU-154	1.300E+04	1.800E+03	1.080E+03	0.000E+00	4.890E+03	0.000E+00	2.250E+05
EU-155	2.650E+03	3.060E+02	1.580E+02	0.000E+00	6.850E+02	0.000E+00	4.100E+05
W-187	7.350E+03	5.110E+03	1.770E+03	0.000E+00	0.000E+00	0.000E+00	3.000E+05
NP-239	4.360E+00	3.900E-01	2.210E-01	0.000E+00	7.780E-01	0.000E+00	1.130E+04

Attachment 13
Environmental Monitoring Sites for REMP

SAMPLE SITE	SECTOR	DISTANCE[1] km	DISTANCE[1] mi	DESCRIPTION
DR1	NW	0.6	0.4	Onsite, Along Cliffs
DR2	WNW	2.7	1.7	Rt. 765, Auto Dump
DR3	W	2.3	1.4	Rt. 765, Giovanni's Tavern (Knotty Pine)
DR4	WSW	2.0	1.2	Rt. 765, Across from White Sand Drive
DR5	SW	2.4	1.5	Rt. 765 at Johns Creek
DR6, A4	SSW	2.9	1.8	Rt. 765 at Lusby, Frank's Garage
DR7, A1, Ib4, Ib5, Ib6	S	0.7	0.5	Onsite, before entrance to Camp Conoy
DR8, A2	SSE	2.5	1.5	Camp Conoy Road at Emergency Siren
DR9, A3	SE	2.6	1.6	Bay Breeze Road
DR10	NW	6.4	4.0	Calvert Beach Rd & Decatur St
DR11	WNW	6.6	4.1	Dirt Road off Mackall Rd & Parran Rd
DR12	W	6.7	4.2	Bowen Rd & Mackall Rd
DR13	WSW	6.1	3.8	Mackall Rd near Wallville
DR14	SW	6.4	4.0	Rodney Point
DR15	SSW	6.2	3.9	Mill Bridge Rd & Turner Rd
DR16	S	6.5	4.1	Across from Appeal School
DR17	SSE	5.9	3.7	Cove Point Rd & Little Cove Point Rd
DR18	SE	7.1	4.5	Cove Point
DR19	NW	4.4	2.8	Long Beach
DR20	NNW	0.4	0.3	Onsite, near shore
DR21, A5, Ib7, Ib8, Ib9	WNW	19.3	12.1	Emergency Operations Facility
DR22	S	12.5	7.8	Solomons Island
DR23	ENE	12.6	7.9	Taylors Island, Carpenter's Property
Wa1	NNE	0.2	0.1	Intake Area
Wa2, Ia1, Ia2	N	0.3	0.2	Discharge Area
Wb1	ESE	0.6	0.4	Shoreline at Barge Road
Ib1, Ib2, Ib3,	SSE	2.6	1.6	Garden Plot off Bay Breeze Rd
Ia4, Ia5	(Area not influenced by Plant Discharge)			Patuxent River
Ia3	E	0.9	0.6	Camp Conoy
Ia6	NNW	10.7	6.7	Kenwood Beach

[1] Distance and direction from the central point of the two containment buildings.

Attachment 14
Radiological Environmental Monitoring Program
Surveillances for Direct Radiation

PARAMETER	UNITS	FREQUENCY	LLD	ACTION LEVEL
GAMMA DOSE(1)	mR	at least quarterly	(2)	N/A

(1) Each sample point shall be monitored using two or more dosimeters OR one instrument for measuring and recording dose rate continuously.

(2) LLD for TLDs used for environmental measurements shall be in accordance with the recommendations of Regulatory Guide 4.13.

Attachment 15
Radiological Environmental Monitoring Program
Surveillances for Airborne Activity

RADIOIODINE CANNISTER

PARAMETER	UNITS	FREQUENCY	LLD	ACTION LEVEL (5)
I-131	pCi/m^3	at least weekly	0.07	0.9

PARTICULATE FILTER (1)

PARAMETER	UNITS	FREQUENCY	LLD	ACTION LEVEL (5)
Gross Beta Activity	pCi/m^3	at least weekly (2)	0.01	N/A (3)
Cs-134	pCi/m^3	at least quarterly (4)	0.05	10.0
Cs-137	pCi/m^3	at least quarterly (4)	0.06	20.0

(1) All samples consist of continuous sampler operation with sample collection weekly, or more frequently if required by dust loading.

(2) Analyze for gross beta activity 24 hours or more after sampling to allow for radon and thoron daughter decay.

(3) Although there is not an **ACTION** Level for gross beta activity, if this parameter is greater than ten times the yearly mean of the control sample, perform **GAMMA ISOTOPIC ANALYSIS** on the individual sample.

(4) Perform a **GAMMA ISOTOPIC ANALYSIS** of a quarterly **COMPOSITE SAMPLE.** A separate **COMPOSITE SAMPLE** shall be prepared for each sample location, A1 thru A5. Each **COMPOSITE SAMPLE** shall be a prepared from individual particulate filter samples collected during the applicable calendar quarter and from a single location.

(5) If an **ACTION** Level is exceeded, check the initiating conditions listed in Radiological Environmental Monitoring Program section 5.c and Radiological Environmental Monitoring Program section 5.d, and perform the corrective actions specified in Radiological Environmental Monitoring Program section 7.d and/or Radiological Environmental Monitoring Program section 7.e.

Attachment 16
Radiological Environmental Monitoring Program
Surveillances for Waterborne Activity

SURFACE WATER SAMPLE [1]

PARAMETER	UNITS	FREQUENCY	LLD	ACTION LEVEL [2]
H-3	pCi/l	at least quarterly	2000[3]	20,000[4]
Mn-54	pCi/l	at least monthly	15	1000
Fe-59	pCi/l	at least monthly	30	400
Co-58	pCi/l	at least monthly	15	1000
Co-60	pCi/l	at least monthly	15	300
Zn-65	pCi/l	at least monthly	30	300
Zr-95 / Nb-95	pCi/l	at least monthly	15	400
I-131	pCi/l	at least monthly	1[5]	2
Cs-134	pCi/l	at least monthly	15	30
Cs-137	pCi/l	at least monthly	18	50
Ba-140 / La-140	pCi/l	at least monthly	15	200

SHORELINE SEDIMENT SAMPLE

PARAMETER	UNITS	FREQUENCY	LLD	ACTION LEVEL [2]
Cs-134	pCi/kg, dry	at least semiannually	150	N/A
Cs-137	pCi/kg, dry	at least semiannually	180	N/A

(1) The water sample shall be a composite of individual samples collected over a 1 month period.
(2) If an **ACTION** Level is exceeded, check the initiating conditions listed in sections REMP SECTION 5.c and REMP SECTION 5.d, and perform the corrective actions specified in section REMP SECTION 7.d and/or REMP SECTION 7.e.
(3) If a drinking water pathway does not exist, a value of 3000 pCi/l may be used.
(4) If a drinking water pathway does not exist, a value of 30,000 pCi/l may be used.
(5) LLD for drinking water samples. If no drinking water pathway exists, the LLD of the gamma isotopic analysis may be used.

Attachment 17
Radiological Environmental Monitoring Program
Surveillances for Ingestible Activity

FISH AND INVERTEBRATES [1]

PARAMETER	UNITS	FREQUENCY	LLD	ACTION LEVEL [5]
Mn-54	pCi/kg, wet	[2]	130	30,000
Fe-59	pCi/kg, wet	[2]	260	10,000
Co-58	pCi/kg, wet	[2]	130	30,000
Co-60	pCi/kg, wet	[2]	130	10,000
Zn-65	pCi/kg, wet	[2]	260	20,000
Cs-134	pCi/kg, wet	[2]	130	1000
Cs-137	pCi/kg, wet	[2]	150	2000

MILK

PARAMETER	UNITS	FREQUENCY	LLD	ACTION LEVEL [5]
I-131	pCi/l, wet	at least monthly [4]	1	3
Cs-134	pCi/l, wet	at least monthly [4]	15	60
Cs-137	pCi/l, wet	at least monthly [4]	18	70
Ba-140 / La-140	pCi/l, wet	at least monthly [4]	15	300

FOOD PRODUCTS

PARAMETER	UNITS	FREQUENCY	LLD	ACTION LEVEL [5]
I-131	pCi/kg, wet	at least monthly[3]	60	100
Cs-134	pCi/kg, wet	at least monthly[3]	60	1000
Cs-137	pCi/kg, wet	at least monthly[3]	80	2000

(1) Edible portions of the fish and invertebrates shall be used for analysis.
(2) The fish and invertebrates shall be sampled at least once per year in season, or semiannually if they are not seasonal.
(3) The food products shall be sampled during the growing season.
(4) The milk samples need be collected and analyzed only if the milk is commercially available in quantities greater than 310 liters per year (see NUREG-0133, 5.3.1.1).
(5) If an **ACTION** Level is exceeded, check the initiating conditions listed in Radiological Environmental Monitoring Program section 5.c and Radiological Environmental Monitoring Program section 5.d, and perform the corrective actions specified in Radiological Environmental Monitoring Program section 7.d and/or Radiological Environmental Monitoring Program section 7.e.

Attachment 18
Map of Environmental Monitoring Sites for REMP (5 Km Radius)

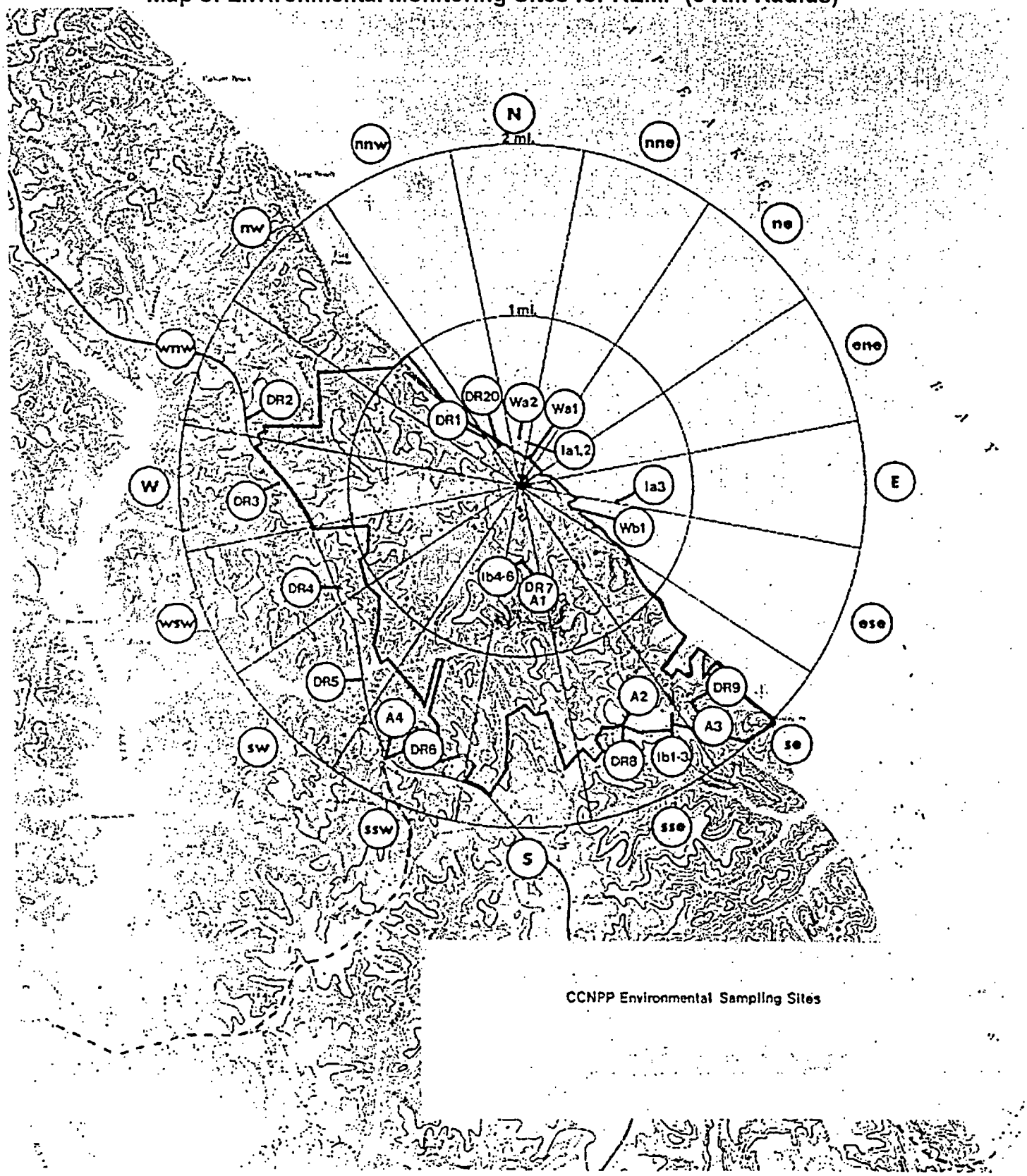

Attachment 19
Map of Environmental Monitoring Sites for REMP (10 Mile Radius)

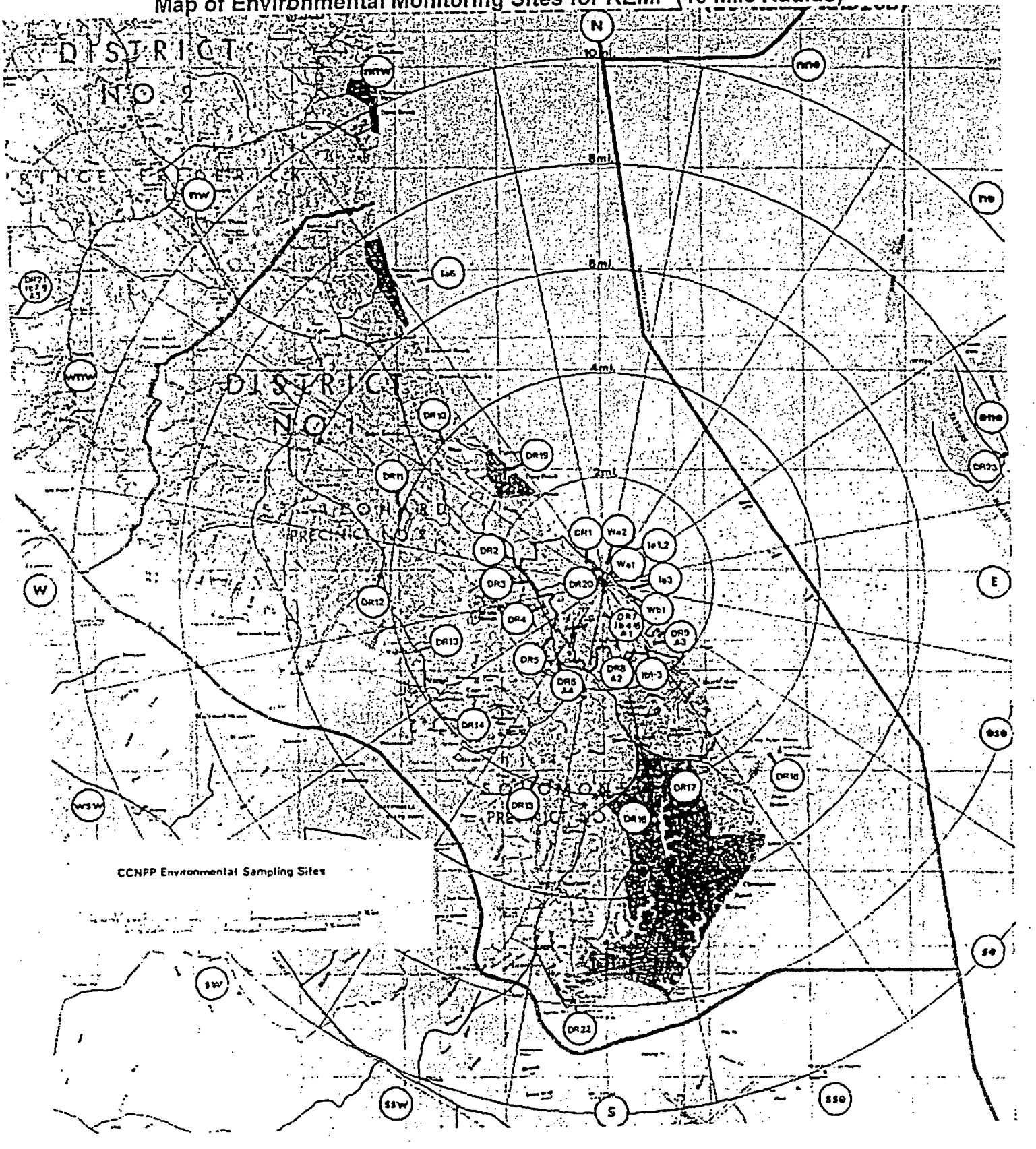

Attachment 20
Environmental Monitoring Sites for ISFSI

STATION	DESCRIPTION	DISTANCE[1] (Kilometers)	DIRECTION[1] (Sector)	
AIR SAMPLERS				
A1[2]	On Site Before Entrance to Camp Conoy	0.3	ESE	
SFA1	Meteorological Station	0.3	NW	
SFA2	CCNPP Visitor's Center	0.8	N	
SFA3	North Northwest of ISFSI	0.1	NNW	May 2004
SFA4	SSE of ISFSI	0.1	SSE	
TLD LOCATIONS				
SFDR1	Southwest of ISFSI	0.2	SW	
SFDR2	North of ISFSI	0.2	N	May 2004
SFDR3	North of ISFSI	0.1	N	
SFDR4	Northeast of ISFSI	<0.1	NE	
SFDR5	East of ISFSI	<0.1	E	
SFDR6	East Southeast of ISFSI	0.1	ESE	
SFDR7	CCNPP Visitor's Center	0.8	N	
SFDR8	North Northwest of ISFSI	0.1	NNW	May 2004
SFDR9	SSE of ISFSI	0.1	SSE	
SFDR10	Northwest of ISFSI	0.1	NW	
SFDR11	West Northwest of ISFSI	0.1	WNW	
SFDR12	WSW of ISFSI	<0.1	WSW	May 2004
SFDR13	South of ISFSI	<0.1	S	
SFDR14	Southeast of ISFSI	0.1	SE	
SFDR15	East Northeast of ISFSI	<0.1	ENE	
SFDR16	Southwest of ISFSI	<0.1	SW	May 2004
DR7[2]	On Site Before Entrance to Camp Conoy	0.3	ESE	
DR30	Meteorological Station	0.3	NW	
SFDR17	NNE OF ISFSI	0.1	NNE	May 2004
SFDR18	West OF ISFSI	0.04	W	
VEGETATION				
SFb1	Meteorological Station	0.3	NW	
SFb2	CCNPP Visitor's Center	0.8	N	
SFb3	North Northwest of ISFSI	0.1	NNW	May 2004
SFb4	SSEof ISFSI	0.1	SSE	
SFb5	On Site Before Entrance to Camp Conoy	0.3	ESE	
SOIL				
SFS1	Meteorological Station	0.3	NW	
SFS2	CCNPP Visitor's Center	0.8	N	
SFS3	North Northwest of ISFSI	0.1	NNW	May 2004
SFS4	SSE of ISFSI	0.1	SSE	
SFS5	On Site Before Entrance to Camp Conoy	0.3	ESE	

[1] Distance and direction from the Central Point of the ISFSI.
[2] Common to both the REMP and the ISFSIMP.

Attachment 21
Map of Environmental Monitoring Sites for ISFSI

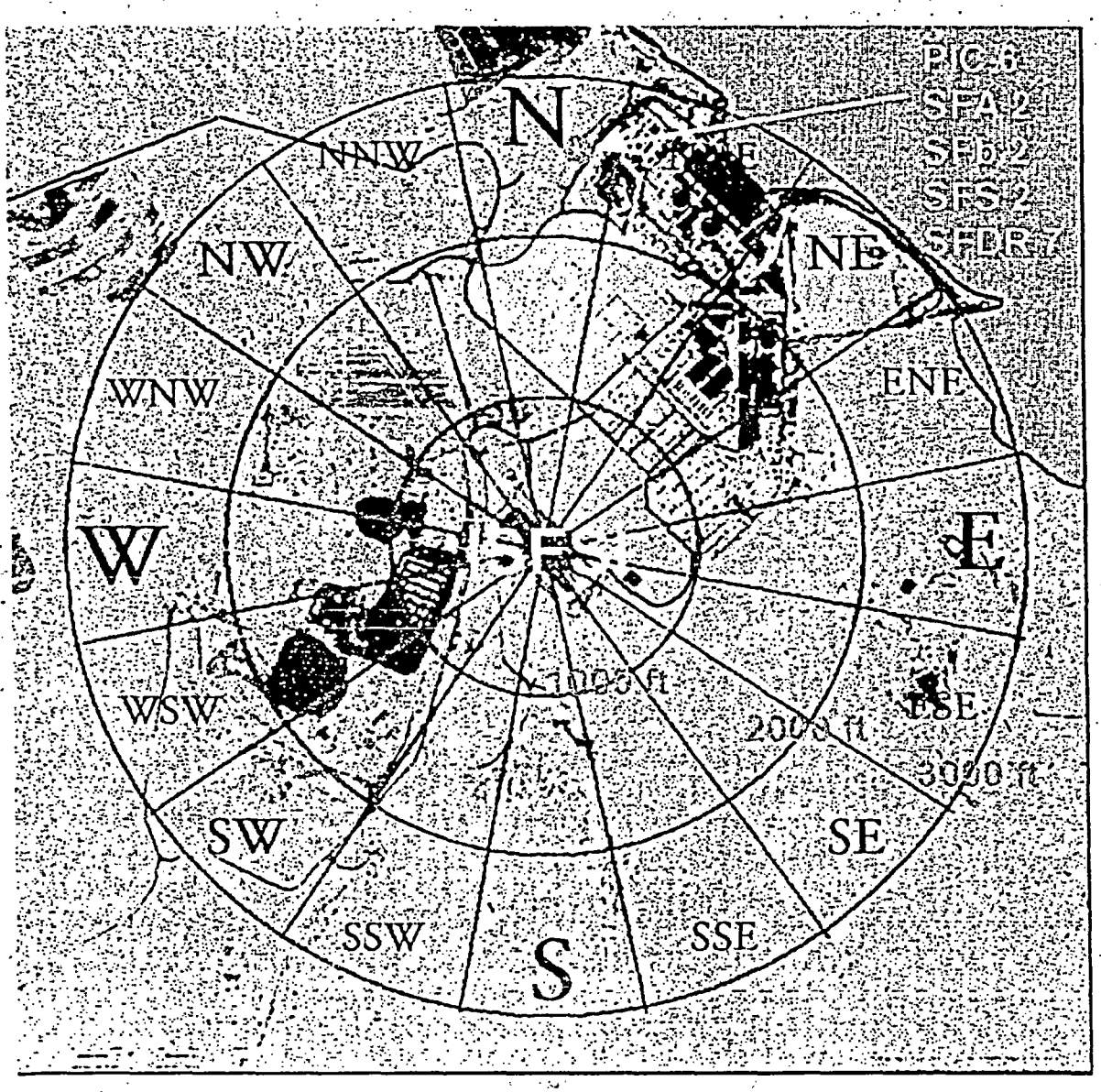

Attachment 22
Map of Environmental Monitoring Sites for ISFSI
(ENLARGED)

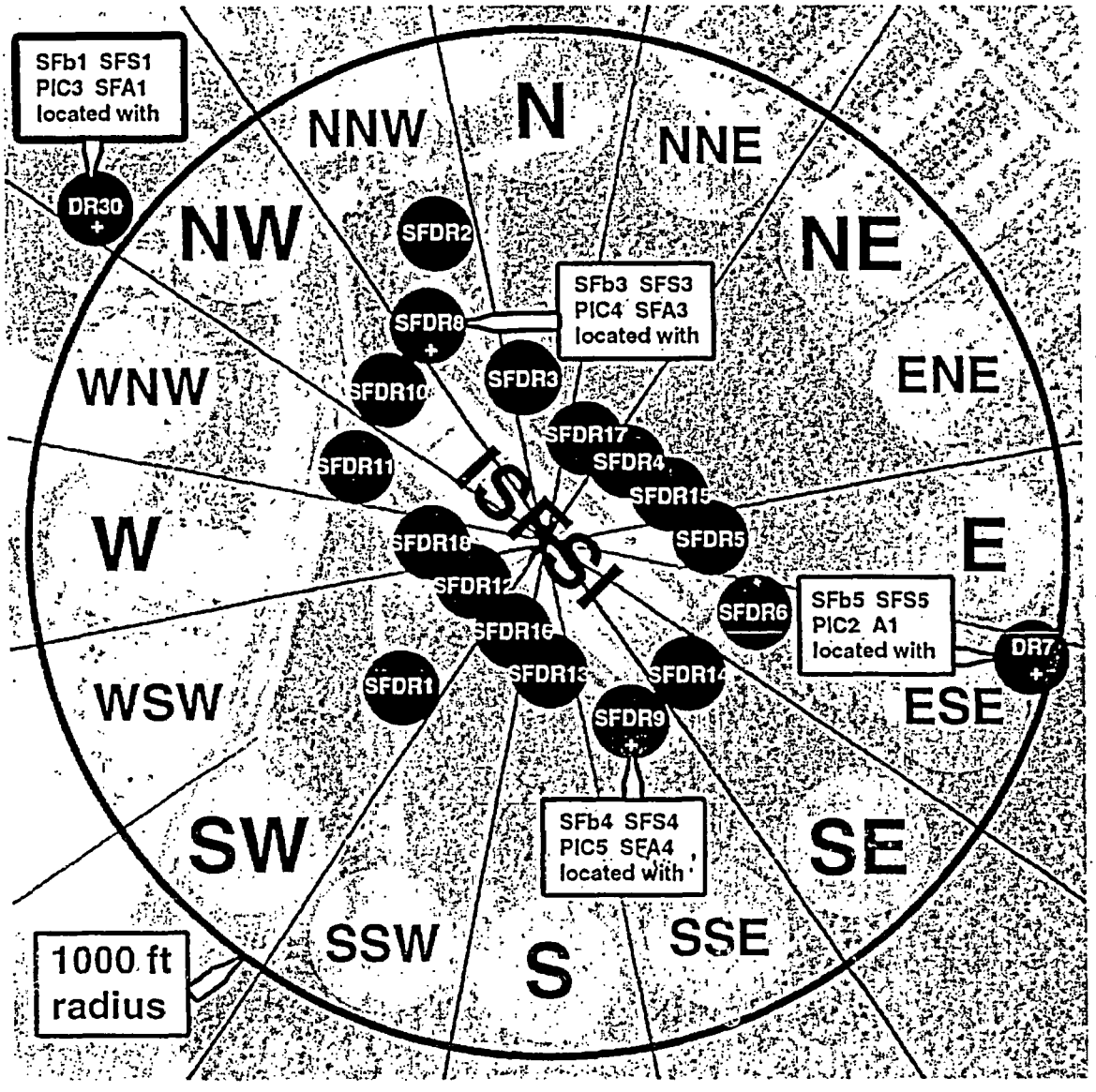

A = Air Sampler (Plant)
DR = Direct Radiation (Plant)
SFDR = Direct Radiation (Spent Fuel)
SFA = Air Sampler (Spent Fuel)
PIC = Pressurized Ion Chamber
SFS = Soil (Spent Fuel)
SFb = Vegetation (Spent Fuel)

Attachment 23
Effluent Radiation Monitors

Description	Radiation Element	Radiation Indicator
Liquid Waste Discharge Radiation Monitor	0-RE-2201	0-RI-2201
Steam Generator Blowdown Effluent Radiation Monitor	1-RE-4095	1-RI-4095
Steam Generator Blowdown Effluent Radiation Monitor	2-RE-4095	2-RI-4095
Steam Generator Blowdown Tank Radiation Monitor	1-RE-4014	1-RI-4014
Steam Generator Blowdown Tank Radiation Monitor	2-RE-4014	2-RI-4014
Wide Range Gas Monitor, Low Range	1-RE-5416	1-RIC-5415
Wide Range Gas Monitor, Low Range	2-RE-5416	2-RIC-5415
Westinghouse Plant Vent Stack Monitor	1-RE-5415	1-RI-5415
Westinghouse Plant Vent Stack Monitor	2-RE-5415	2-RI-5415
GASEOUS RADWASTE PROCESSING SYSTEM Radiation Monitor	0-RE-2191	0-RE-2191

Accident Monitors Not Addressed By The ODCM

Wide Range Gas Monitor, Mid Range	1-RE-5417
Wide Range Gas Monitor, High Range	1-RE-5418
Wide Range Gas Monitor, Mid Range	2-RE-5417
Wide Range Gas Monitor, High Range	2-RE-5418