Omaha Public Power District
Fort Calhoun Station

Generic Letter 2004-02
Pilot Plant Overview Meeting

July 14, 2005

Meeting Agenda

Bernie Van Sant

- Introduction and Overview – OPPD
- FCS Approach and Progress- OPPD
- Debris Generation and Transport – Alion
- Strainer Hardware Overview – GE
- Downstream Effects – S&L
- Design Change Process – S&L
- Overview of Expectations – NRC
- Future Actions/Meetings - All

Introduction and Overview

- Project Team
- 2006 Major Projects
- Project Status
  - Hardware
  - Licensing
  - Analysis
  - Installation

Fort Calhoun Station Team Members

- Omaha Public Power District (OPPD)

  Bernie Van Sant – Manager Nuclear Projects

  Michael Friedman – Project Manager

  Tom Matthews – Nuclear Licensing Supervisor

- Alion Science and Technology

  Jan Bostelman - Debris Generation, Debris Transport, CFD, General Project Support

- General Electric

  Barry Smith - Strainer Hardware

- Sargent & Lundy

  Steve Raupp - Design Change Package, Downstream Effects, Minor Modifications, General Project Support

2006 Outage Major Projects

- Steam Generator Replacement
- Reactor Vessel Head Replacement
- Rapid Refueling Package Installation
- Pressurizer Replacement
- ECCS Sump Strainers
- Low Pressure Turbine Replacement
- Main Output Transformer Replacement

Project Status

Strainer Hardware

- New strainers of approximately 2800 ft^2 (total) will be installed in Fall 2006 to replace existing 56 ft^2 strainers
- Design will be a large passive stacked disk strainer
- Complex testing program and evaluation/ optimization required for final hardware sizing – August 2005
- Design Change Package for installation – April 2006

Project Status

Licensing: Generic Letter 2004-02

- Initial 90-Day response - Completed
- RAI response for chemical effects – In Progress
- September 2005 response – Under Development
  - Will reflect expected post-modification plant design
  - Working to evaluate and resolve industry unknowns
  - Considering several alternatives to optimize design and demonstrate design margin

Project Status (cont.)

Analysis

- Debris Generation (DG), Debris Transport (DT) and Computational Fluid Dynamics (CFD) Calculation developed
- Water level calculation complete
- NPSH calculation being revised using flow modeling software
- Downstream effects Phase 1 (Blockage) currently being finalized; Phase 2 (Wear and Fuel Blockage) in progress

Project Status (cont.)

Installation

- Installation to be performed by steam generator replacement contractor
- Fall 2006 Refueling Outage
- Planned for 93 days

Passive Strainer – Conceptual

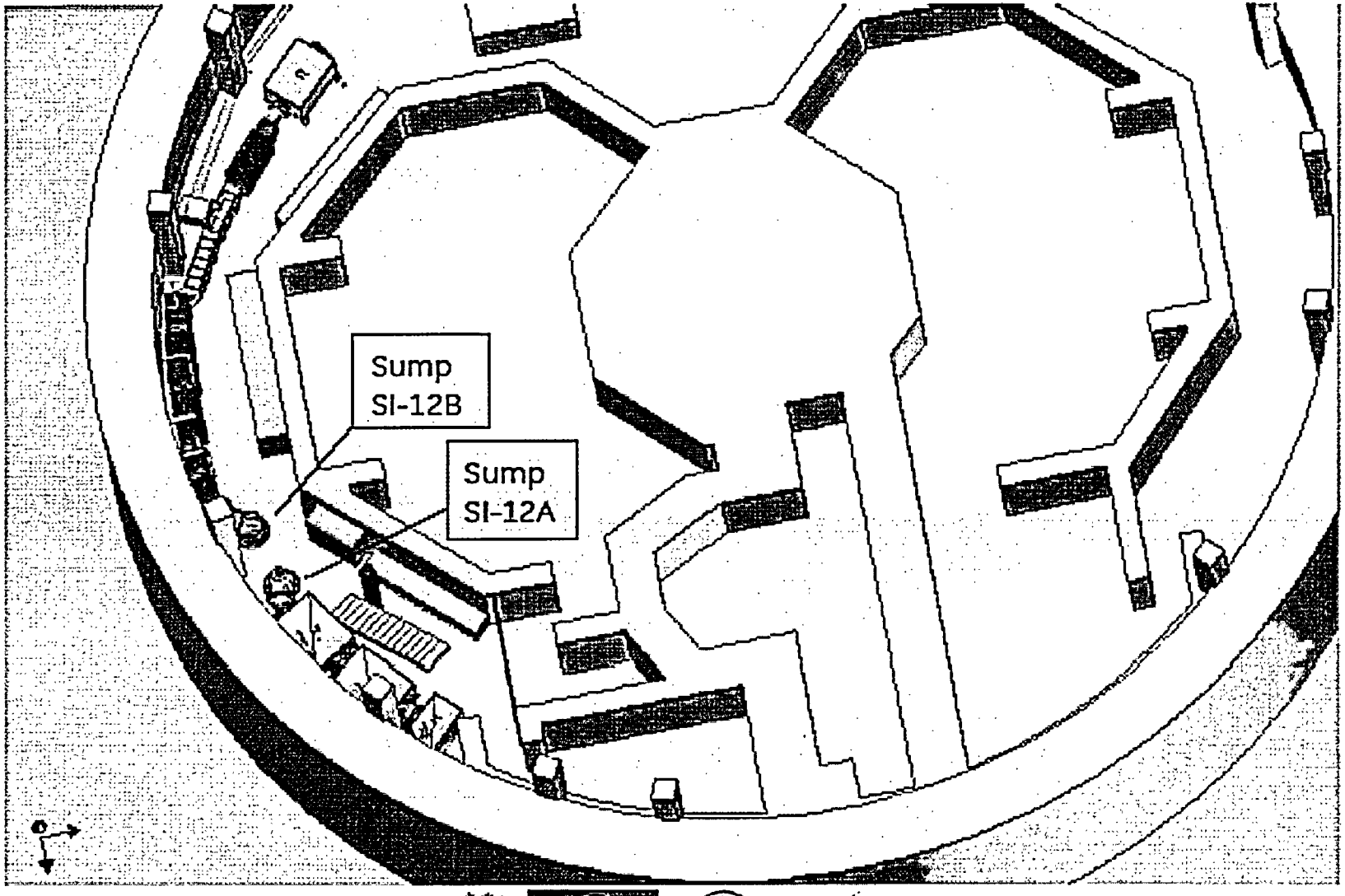

Fort Calhoun Station (FCS) Approach and Progress

Michael Friedman
Project Manager – ECCS Strainers
Fort Calhoun Station

FCS Approach

Objective

- Ensure nuclear safety by meeting the design considerations identified in the industry documents and the NRC SER
- Optimize the project by minimizing cost, schedule, and operational limitations

Project Progress

Analysis

- Debris Generation, Transport and CFD prepared to identify debris loads
  - Calculation updates planned to include evolving knowledge base such as coatings testing
- Flow Modeling and Containment Analysis
  - Realistic NPSH margin for a variety of conditions and time dependant variables
- Downstream Effects Evaluation
  - Two phase program – maximum particle size and long term effects
- Water Level Evaluation
  - Improved analysis for water hold up

Project Progress

- Chemical Effects
  - Evaluation to consider applicability of industry data to plant specific parameters
  - NPSH margin provided for September GL response
  - NPSH margin validated based on vendor strainer testing
  - Response to RAI on chemical effects – information discussed above will be included
- Upstream Effects
  - Plant walkdowns and evaluation of potential water retention completed; identified plant enhancement modification to raise sump pool water level

Administrative Controls

- Insulation Control Program (drafted/not approved)
  - Maintains configuration control
  - Requires Engineering approval to change insulation type or quantity in containment
  - Insulation inventory spread sheet on web page with hot-linked photographs
- Latent Debris Collection (drafted/not approved)
  - Plant procedure drafted and used during 2005 RFO for latent debris collection
    - Validated values used in debris generation calculation are conservative
    - Validates plant cleanliness procedures are effective

Administrative Controls

- Downstream Configuration Control
  - Modified/replacement components will require downstream effects evaluation
  - Requirements to be added to design change process

Modifications

- Strainer hardware contracts in place
- Spacers to be installed for RPV flange seal base – enhancement based on upstream evaluation
- Insulation Replacement
  - Steam Generators and Pressurizer
    - Reflective metal insulation for vessels
    - Thermal wrap for associated piping
  - Other locations as needed

Project Optimization

- Project optimization planned immediately after testing
  - Need to find the technically best and most cost effective solution
  - Several variables need to be evaluated to identify final design
  - Provide adequate design margin for unknowns
- Design options fall into three categories
  - Reduction of debris and transport source term
  - NPSH and head loss
  - Strainer design and modifications

Resolution Optimization

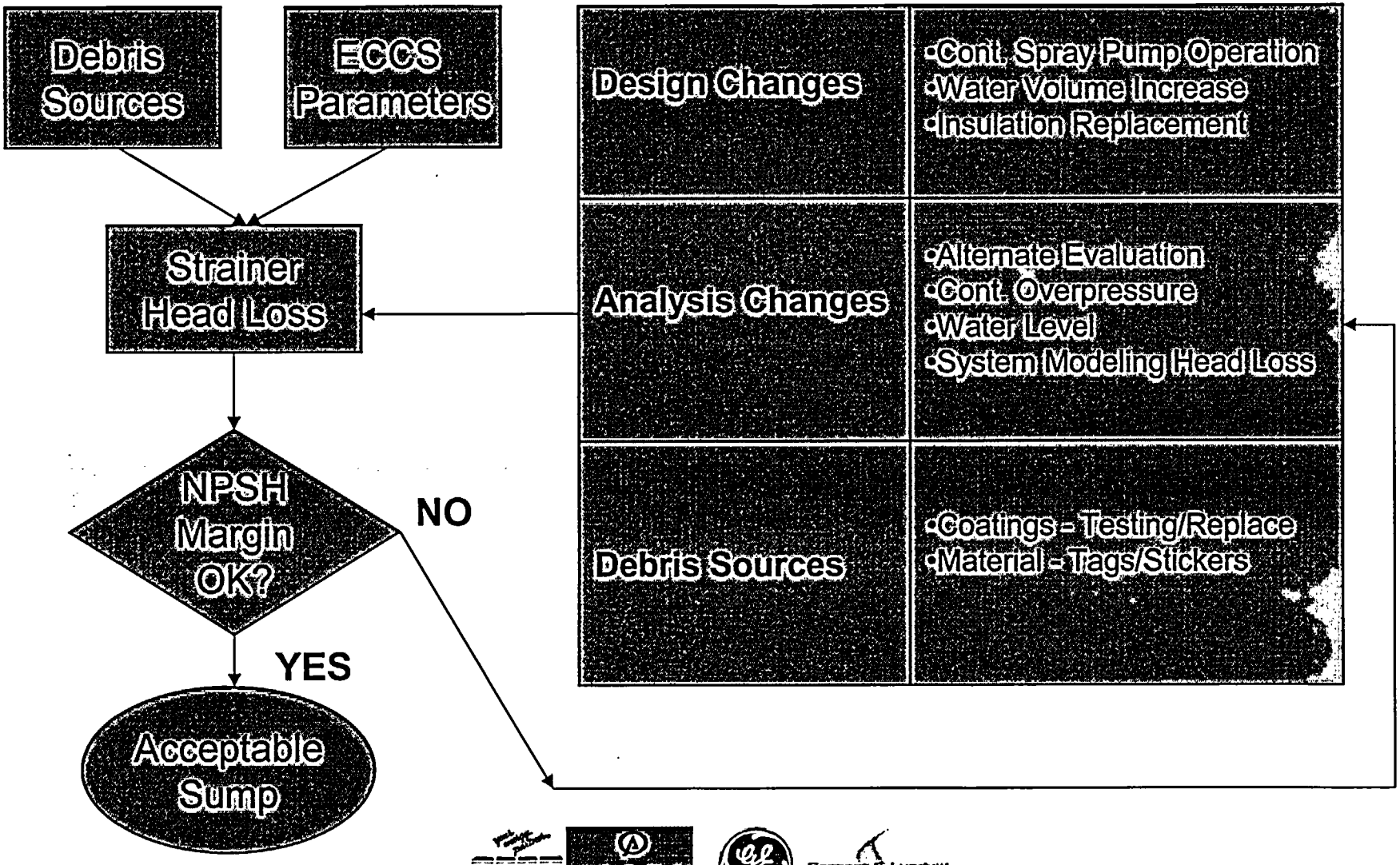

Project Optimization

- Containment spray pump operation
  - Temporary license amendment approved for operation with one pump, can become permanent
  - Defeat auto start for one spray pump to improve NPSH margin
- Time dependent/event dependent NPSH evaluation, instead of cumulative worst case analysis
- Increase containment overpressure

  (license amendment required)
- Insulation replacement - asbestos

Project Optimization

- Primary Methods Being Evaluated
  - Crediting Alternate Evaluation Region 2 Methodology for additional margin beyond design basis
    - 14" break loads evaluated in debris generation
    - 10" break to be considered based on largest pipe connection (pressurizer surge line)
    - Scope of work currently being evaluated
  - Realistic vs. conservative NPSH margin evaluation
    - Nominal tank volumes
    - Operator action to secure pumps
    - Realistic containment heat removal/decay heat rates
    - Pump operation with minimal cavitation
    - Injection of refilled Safety Injection & Refueling Water tank

Schedule

Pilot Plant kickoff meeting	July 2005
Head loss testing	July/August 2005
Optimization	August 2005
GL 2004-02 Response	September 2005
License Amendments (if required)	December 2005
Design Change Package complete	April 2006
Hardware on site	August 2006
Installation	October/November 2006
Updated/as-built design	December 2006

Debris Generation and Transport Calculations

Jan Bostelman

Alion Science and Technology

OPPD Resolution Strategy

- Debris Source Identification
- Debris Analysis
  - Debris Generation (DG)
  - Debris Transport (DT) includes 3D Computational Fluid Dynamics (CFD)

Debris Source Identification

- NEI-02-01 Walkdown (RFO 2003) OPPD/Enercon/Alion/CCCL Team
- Insulation Types
  - Calcium silicate with and without asbestos
  - Transco Reflective Metal Insulation (RMI)
  - NUKON
  - Cerafiber
  - TempMat
  - High Density (HD) Supertemp
  - Foam Rubber
  - Fiberglass Low Density Fiber Glass (LDFG)

Insulation Data Sheet Example

Area	Insulation ID	Description 1	Description 2	Location	Elevation	Nominal Pipe Size (in)	Component Outside Diameter (in)	Length (ft)
A	1	CH-205	Regen HX to Aux Pzr Spray 2"RC-2508R 2"CH-2508R	Outside west wall of Pzr Cubicle (EL. 1045)	1052'-11" to 1042'-6"	2	Box 10"x10"x10"	N/A
A	1	HCV-249	Regen HX to Aux Pzr Spray 2"RC-2508R 2"CH-2508R	Outside west wall of Pzr Cubicle (EL. 1045)	1052'-11" to 1042'-6"	2	2.375	N/A
A	1	CH-469	Regen HX to Aux Pzr Spray 2"RC-2508R 2"CH-2508R	Outside west wall of Pzr Cubicle (EL. 1045)	1052'-11" to 1042'-6"	2	Box 12"x12"x12"	N/A
A	1	HCV-240	Regen HX to Aux Pzr Spray 2"RC-2508R 2"CH-2508R	Outside west wall of Pzr Cubicle (EL. 1045)	1052'-11" to 1042'-6"	2	2.375	2
A	1	Outlet Line Tube Side Regen HX (From Regen HX to Aux Pzr Spray) - 2 Sections 1) from floor to U/S HCV-240; 2) D/S CH-205 to elbow	Regen HX to Aux Pzr Spray 2"RC-2508R 2"CH-2508R	Outside west wall of Pzr Cubicle (EL. 1045)	1052'-11" to 1042'-6"	2	2.375	8
A	1	Elbow D/S CH-205 to Wall Penetration	Regen HX to Aux Pzr Spray 2"RC-2508R 2"CH-2508R	Outside west wall of Pzr Cubicle (EL. 1045)	1052'-11" to 1042'-6"	2	2.375	17.1
A	1.1	Radiant Energy Shield with structural steel outside Pzr cube by Cont. Wall	Radiant Energy Shield	Valve HCV-249 outside Pzr Cubicle	1052'-11" to 1042'-6"	N/A	N/A	N/A

Continuation of Insulation Data Sheet

Insulation Type	Insulation Thickness (in)	***For Info. Only*** Calculated Volume (cu ft) [Note 2]	Jacket Material	P&ID	ISO	Layout	Bio Shield	***For Info. Only*** Insulation Volume (cu ft)	Photo #1
Temp Mat	2	0.57	Aluminum	E-23866-210-120 Sh. 1A, E-23866-210-110 Sh. 1A	CH-2014, Sh. 1	11045-M-16	O	0.57	P1160078.jpg
None	N/A	0.00	None	E-23866-210-120 Sh. 1A, E-23866-210-110 Sh. 1A	CH-2014, Sh. 1	11045-M-16	O	0.00	P1160078.jpg
Temp Mat	2	1.00	Aluminum	E-23866-210-120 Sh. 1A, E-23866-210-110 Sh. 1A	CH-2014, Sh. 1	11045-M-16	O	1.00	P1160078.jpg

Coatings

- Acceptable Coatings
  - Phenoline 305/CZ11: steel liner plate, polar crane, structural steel
  - Keeler & Long 6548/7107 with E-1: maintenance steel, liner plate,
  - Nu-Klad 110AA/Amercoat No. 66: concrete floors, walls, ceilings
  - Carboline 191/Phenoline 305: maintenance steel
  - Carboguard 890: new equipment, piping supports, maintenance steel
- Unqualified Coatings
  - Corlar 825-8031 Zinc Chromate/Phenoline 305: safety injection tanks
  - #773 Dulux Zinc Chromate/Phenoline 305:quench tank
  - Alkyds: valve operators, junction boxes, snubbers, unistrut
  - Aluminum Coatings: reactor vessel, steam generators, and pressurizer (note new pressurizer, reactor vessel head and steam generators will **not** have Aluminum Coatings)

Latent Debris

- Latent Debris (surveyed/measured by OPPD and samples examined/measured by Los Alamos National Labs-LANL)
- Estimated as 159 lbm dirt/dust/fiber from surveys
- Extensive cleaning conducted 2003 outage
- In analysis conservatively used 200 lbm, 85% dirt/dust, 15% fiber
- Measured/counted labels yielding reduction in strainer area of 71 ft^2
- Follow-on inspection Spring 2005 outage Survey performed 12 hours after reactor shutdown
- Spring 2005 outage survey estimated containment debris load as 28 lbm

Debris Generation

- Large, Medium and Small Full DEGB Loss of Coolant Accident (LOCA)
- Main Steam Line Break/Feedwater Line Break do not require recirculation
- Zone of Influence (ZOI) 17.1 Length/Diameter (L/D) used for NUKON insulation
- ZOI 11.7 L/D used for TempMat insulation
- ZOI 5.5 L/D used for Calcium Silicate

Debris Generation

- ZOI 10.0 and 4.0 L/D used for approved coatings (pending further industry studies)
- NUKON and TempMat Size Distribution: 60% fines and 40% large pieces (per GR/SER)
- Cerafiber 100% fines: all Cerafiber in containment assumed failed
- Calcium Silicate 100% fines
- Plant-specific latent debris walkdown information (and LANL tests)

Fort Calhoun Station DG and CFD CAD Model-Highly Compartmentalized

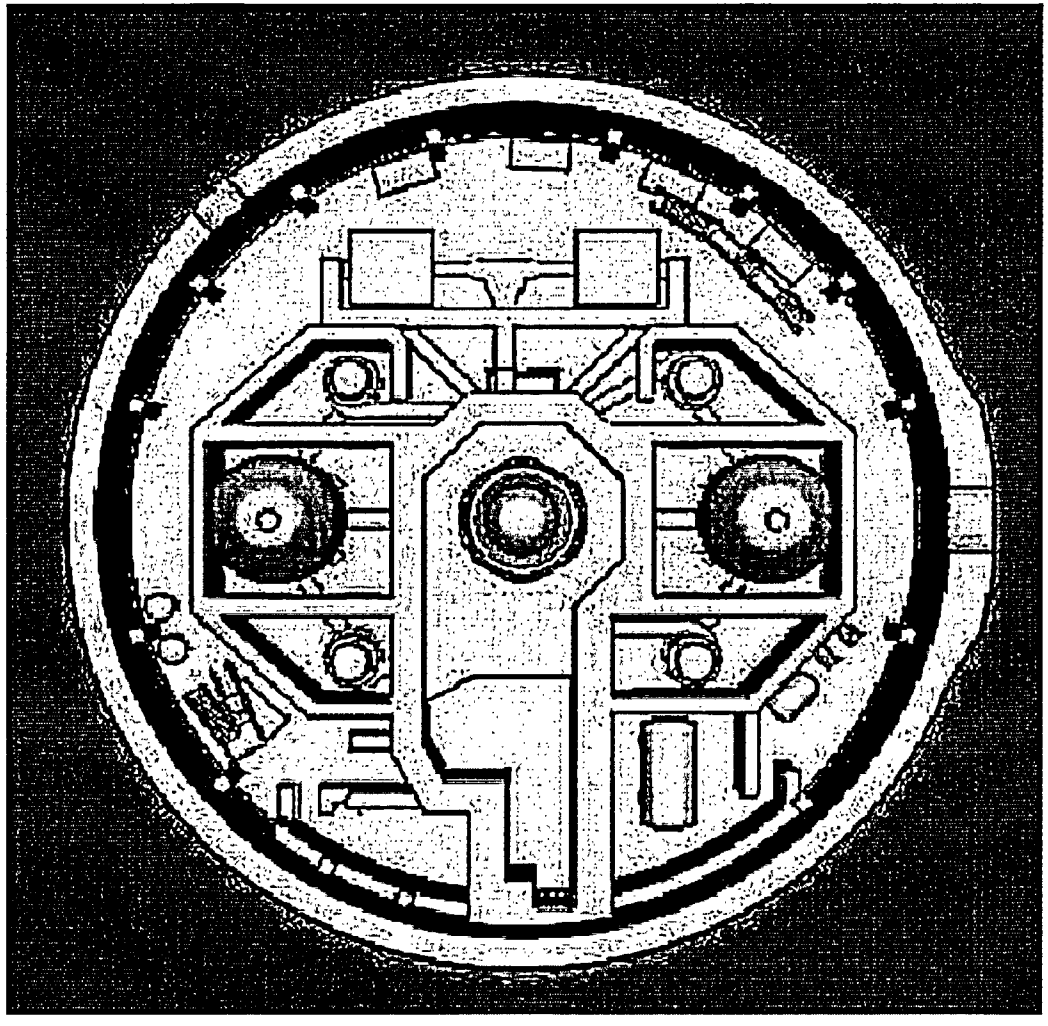

DG Breaks 5.5 L/D Spherical ZOI for Calcium Silicate

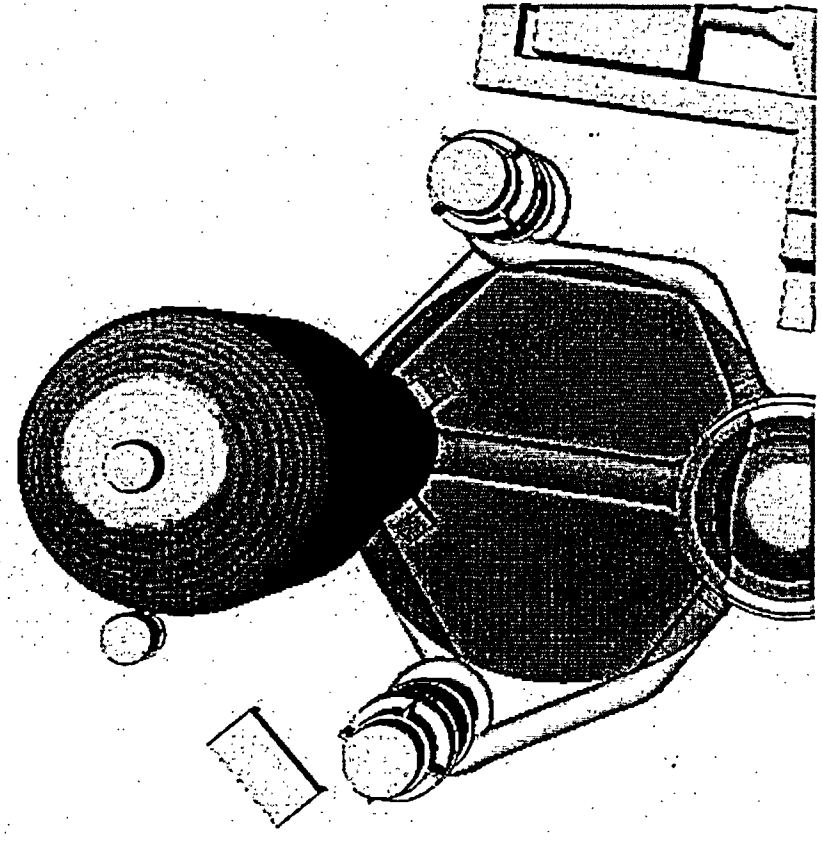

DG Breaks 11.7 L/D Spherical ZOI for TempMat

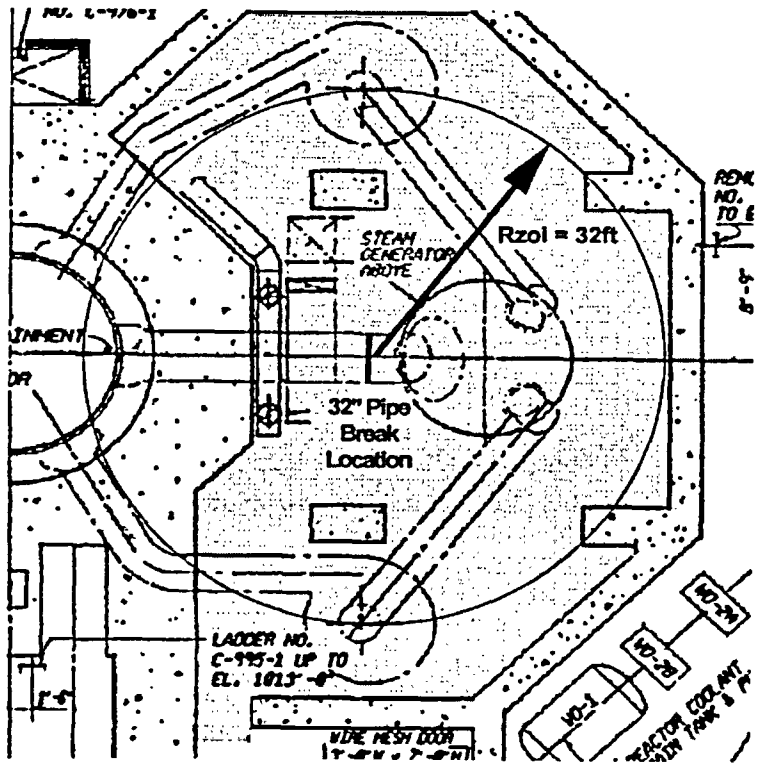

Pivot Tables

Table 4.3-6b Break No. 3

Breaks in the most direct path to the sump

Case 3 - Spray Control Valve Line Scenario

Sum of Calculated Volume (cu ft)	
Insulation Type	*Total*
Fiberglass	100.8463268
Temp Mat	2.361648644
Calcium Silicate	0.621969896
CalSil / Asbestos	4.223609523
Grand Total	**108.0535549**

Break No. 1-Large Break LOCA Debris Summary

INSULATION DEBRIS	CASE 1 LARGE PIECES	CASE 1 FINES	CASE 2 LARGE PIECES	CASE 2 FINES
HIGH FIBER SCENARIO				
Calcium Silicate	0.00 ft^3	4.81 ft^3	0.00 ft^3	0.00 ft^3
Calcium Silicate/Asbestos	0.00 ft^3	49.41 ft^3	0.00 ft^3	0.00 ft^3
Craftier	0.00 ft^3	0.88 ft^3	0.00 ft^3	0.88 ft^3
*Foam Rubber	0.54 ft^3	0.00 ft^3	0.54 ft^3	0.00 ft^3
NUKON®	0.92 ft^3	1.38 ft^3	107.3 ft^3	161.0 ft^3
Temp-Mat®	64.99 ft^3	97.48 ft^3	64.99 ft^3	97.48 ft^3
RMI	33,645.68 ft^2		33,645.68 ft^2	
HIGH PARTICULATE SCENARIO				
Calcium Silicate	0.00 ft^3	0.15 ft^3		
Calcium Silicate/Asbestos	0.00 ft^3	93.3 ft^3		
Cerafiber	0.00 ft^3	1.72 ft^3		
*Foam Rubber	0.54 ft^3	0.00 ft^3		
NUKON®	0.53 ft^3	0.80 ft^3		
Temp-Mat®	9.32 ft^3	13.98 ft^3		
RMI	33,645.68 ft^2			
COATINGS DEBRIS				
Acceptable Coatings 4 L/D ZOI		150 lbm		150 lbm
Acceptable Coatings 10 L/D ZOI		941 lbm		941 lbm
Unqualified Coatings		1125 lbm		1125 lbm
LATENT DEBRIS				
Particles		80.3 lbm		80.3 lbm
Fibers		4.4 lbm		4.4 lbm
Others		74.3 lbm		74.3 lbm
Stickers/Tape Reduce Strainer Screen Area		71.0 ft^2		71.0 ft^2

Medium Break LOCA Debris Summary

Table 4.3-6 Break No. 1 MBLOCA
RCS 14" Breach Debris Generation Case 1

Insulation Type	Quantity Destroyed
Calcium Silicate	0.00 ft^3
Calcium Silicate/Asbestos	36.3 ft^3
Cerafiber	0.88 ft^3
Foam Rubber	0.54 ft^3
NUKON®	2.30 ft^3
Temp-Mat®	87.92 ft^3
RMI	33,645.68 ft^2

Table 4.3-7 Break No. 1 MBLOCA
RCS 14" Breach Debris Generation Case 2

Insulation Type	Quantity Destroyed
Calcium Silicate	0.00 ft^3
Calcium Silicate/Asbestos	0.00 ft^3
Cerafiber	0.88 ft^3
Foam Rubber	0.54 ft^3
NUKON®	268.34 ft^3
Temp-Mat®	87.92 ft^3
RMI	33,645.68 ft^2

Small Break LOCA Debris Summary

BREAK NO. 3 – MOST DIRECT PATH TO THE SUMP

INSULATION DEBRIS	CASE 1 LARGE PIECES	CASE 1 FINES	CASE 2 LARGE PIECES	CASE 2 FINES
Calcium Silicate	0.00 ft^3	5.39 ft^3	0.00 ft^3	0.62 ft^3
Calcium Silicate/Asbestos	0.00 ft^3	38.97 ft^3	0.00 ft^3	4.22 ft^3
Fiberglass	0.00 ft^3	61.33 ft^3	0.00 ft^3	100.84 ft^3
Temp-Mat®	0.94 ft^3	1.42 ft^3	0.94 ft^3	1.42 ft^3

Debris Transport

- Logic tree approach similar to Drywell Debris Transport Studies (DDTS)
- Fibrous debris 2-size distribution used without refinement
- Blowdown, washdown, pool fillup and recirculation
- CFD analysis conducted for recirculation only (all fines transport)
- Assumed non-homogenous distribution of debris in recirculation pool
- CFD results: recirculation transport fines 100%

Debris Transport

- Used LBLOCA minimum water level for conservatism in CFD (LBLOCA level at 3.96 ft)
- 10% inactive area
- Fibrous debris 2-size distribution already accounts for erosion of LDFG; evaluated this information against data available at 9 and 16 inch pool depths; FCS deep pool
- CFD is very conservative in not modeling the large passive array (i.e., very low approach velocities in that area); currently utilizes only the existing piping configuration
- CFD results illustrated debris interceptors would not be necessary for FCS

Recirculation Pool Transport RMI

- Utilized CFD model to evaluate turbulent kinetic energy and velocities (tumbling/sliding) for RMI (Break B Bay on left, Break A Bay on right)
- Maximum break flow 3 High Pressure Safety Injection (HPSI) pumps (1,350 gpm)
- Maximum Containment Spray (CS) flow (3 pumps)

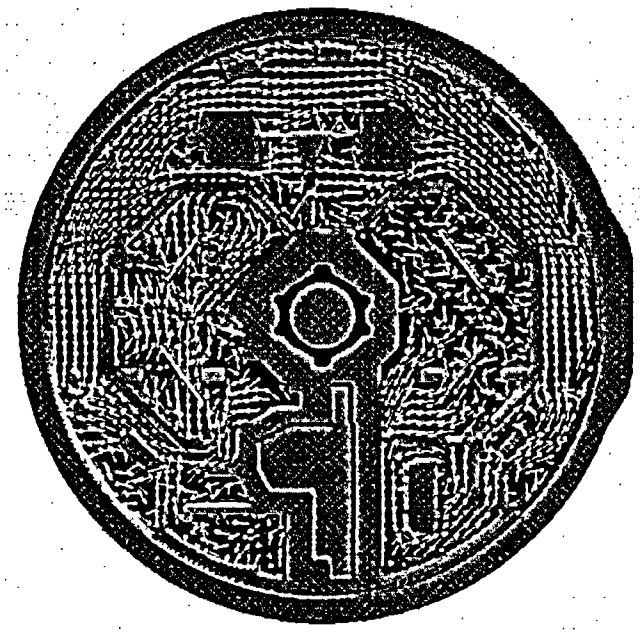

Recirculation Pool Transport Small LDFG

- Utilized CFD model to evaluate turbulent kinetic energy and velocities (tumbling/sliding) for small LDFG (Break B Bay on left, Break A Bay on right)
- Maximum break flow 3 HPSIs (1,350 gpm)
- Maximum CS flow

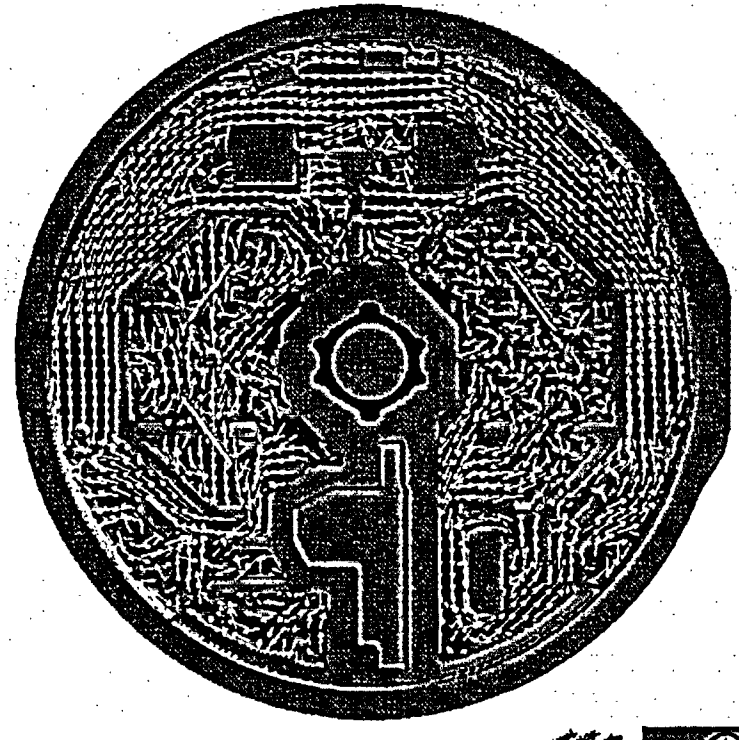

Recirculation Pool Transport Small TempMat

- Utilized CFD model to evaluate turbulent kinetic energy and velocities (tumbling/sliding) for small TempMat (Break B Bay on left, Break A Bay on right)
- Maximum break flow 3 HPSIs (1,350 gpm)
- Maximum CS flow

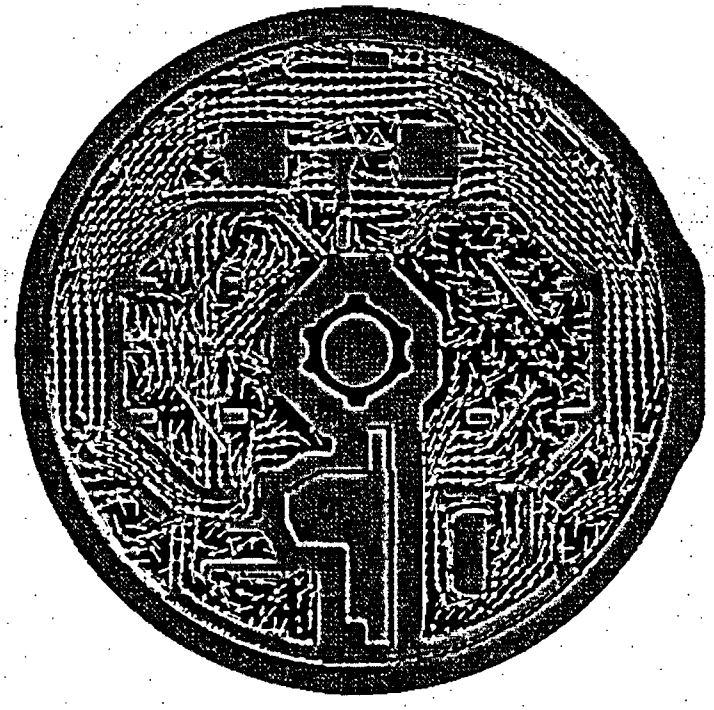

Recirculation Pool Transport Large LDFG

- Utilized CFD model to evaluate turbulent kinetic energy and velocities (tumbling/sliding) for large LDFG (Break B Bay on left, Break A Bay on right)
- Maximum break flow 3 HPSIs (1,350 gpm)
- Maximum CS flow

Recirculation Pool Transport RMI

- Utilized CFD model to evaluate turbulent kinetic energy and velocities (tumbling/sliding) for RMI maximum flow on left, ***intermediate flow on right***

Recirculation Pool Transport Intermediate Flow

- Utilized CFD model to evaluate turbulent kinetic energy and velocities (tumbling/sliding) for intermediate flow conditions (Large LDFG on left, Small on right)

Debris Transport to Sump

Overall Debris Transport Fraction (DTF) to the Sump

LBLOCA Fibrous Debris	56%
LBLOCA Calcium Silicate	90%
LBLOCA Reflective Metallic Debris	29%
SBLOCA Fibrous Debris	100%
SBLOCA Calcium Silicate	100%
SBLOCA Reflective Metallic Debris	100%
Latent Debris	100%

High Fiber Scenario

Debris to Strainer after RSG (worst case ECCS)

Case 2 BREAK No. 1 – Largest Potential For debris

INSULATION Debris	Total Volume Generated (Large pieces and fines)	DTF	Volume/Mass or Area at Strainer
High Fiber Scenario			
Calcium Silicate	0.00 ft^3	0.9	0.00 ft^3
Calcium Silicate/Asbestos	0.00 ft^3	0.9	0.00 ft^3
Cerafiber	0.88 ft^3	0.56	0.49 ft^3
*Foam Rubber	0.54 ft^3	0.00	0.00 ft^3
NUKON®	268.3 ft^3	0.56	150.25 ft^3
Temp-Mat®	162.47 ft^3	0.56	90.98 ft^3
RMI	33,645.68 ft^2	0.29	9,757 ft^2
Coatings Debris			
Acceptable Coatings 4 L/D ZOI	150 lbm	0.90	135 lbm
Acceptable Coatings 10 L/D ZOI	941 lbm	0.90	847 lbm
Unqualified Coatings Chips	1125 lbm	0.50	563 lbm
Latent Debris			
Particles	80.3 lbm	1.00	80.3 lbm
Fibers	4.4 lbm	1.00	4.4 lbm
Others	74.3 lbm	1.00	74.3 lbm
Stickers/Tape Reduce Strainer Screen Area	71.0 ft^2	1.00	71.0 ft^2

High Fiber Scenario

Debris to Strainer after RSG (intermediate case ECCS)

Case 2 BREAK No. 1 – Largest Potential For debris

INSULATION Debris	Total Volume Generated (Large pieces and fines)	DTF	Volume/Mass or Area at Strainer
High Fiber Scenario			
Calcium Silicate	0.00 ft^3	0.9	0.00 ft^3
Calcium Silicate/Asbestos	0.00 ft^3	0.9	0.00 ft^3
Cerafiber	0.88 ft^3	0.54	0.49 ft^3
*Foam Rubber	0.54 ft^3	0.00	0.00 ft^3
NUKON®	268.3 ft^3	0.54	150.25 ft^3
Temp-Mat®	162.47 ft^3	0.54	90.98 ft^3
RMI	33,645.68 ft^2	0.20	9,757 ft^2
Coatings Debris			
Acceptable Coatings 4 L/D ZOI	150 lbm	0.90	135 lbm
Acceptable Coatings 10 L/D ZOI	941 lbm	0.90	847 lbm
Unqualified Coatings Chips	1125 lbm	0.50	563 lbm
Latent Debris			
Particles	80.3 lbm	1.00	80.3 lbm
Fibers	4.4 lbm	1.00	4.4 lbm
Others	74.3 lbm	1.00	74.3 lbm
Stickers/Tape Reduce Strainer Screen Area	71.0 ft^2	1.00	71.0 ft^2

Conservatisms in Debris Generation/Transport

- Used only 2 size distribution, could utilize SER proposed distribution for fiber (4 sizes) and account for some erosion
- Used only 2 size distribution for CalSil, could optimize with OPG data to possible 4 size distribution but would need to expand ZOI out for OPG results
- CFD analyzed current pipe layout for recirculation, exact strainer design array would indicate much lower turbulence levels near strainer, and therefore. less potential for transport
- Utilized maximum ECCS and full DEGB breaks

Strainer Hardware Overview

Barry Smith
General Electric

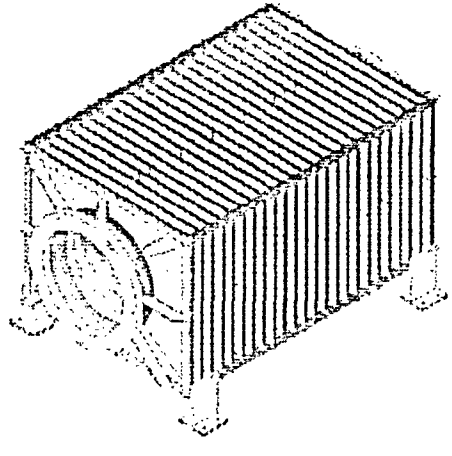

GE Topics

- GE/FCS Sump Strainer Program Overview
- GE Strainer Sizing Methodology - FCS
- GE Technical Safety Evaluation

GE-FCS Sump Strainer Program

Interfaces

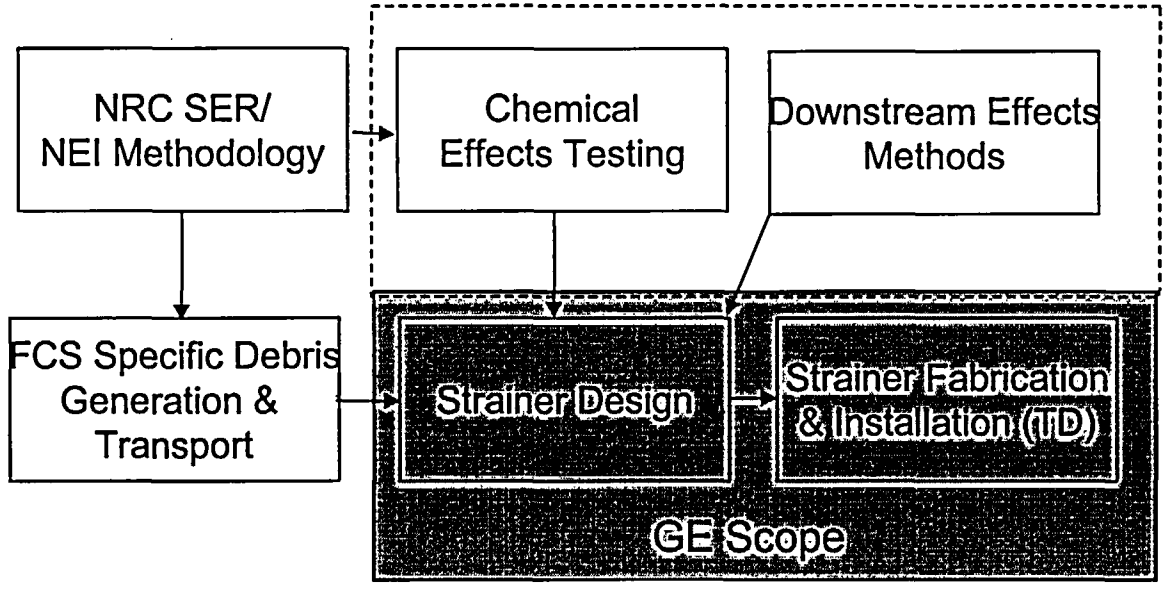

GE-FCS Sump Strainer Program

GE Scope – Task Flow and Schedule

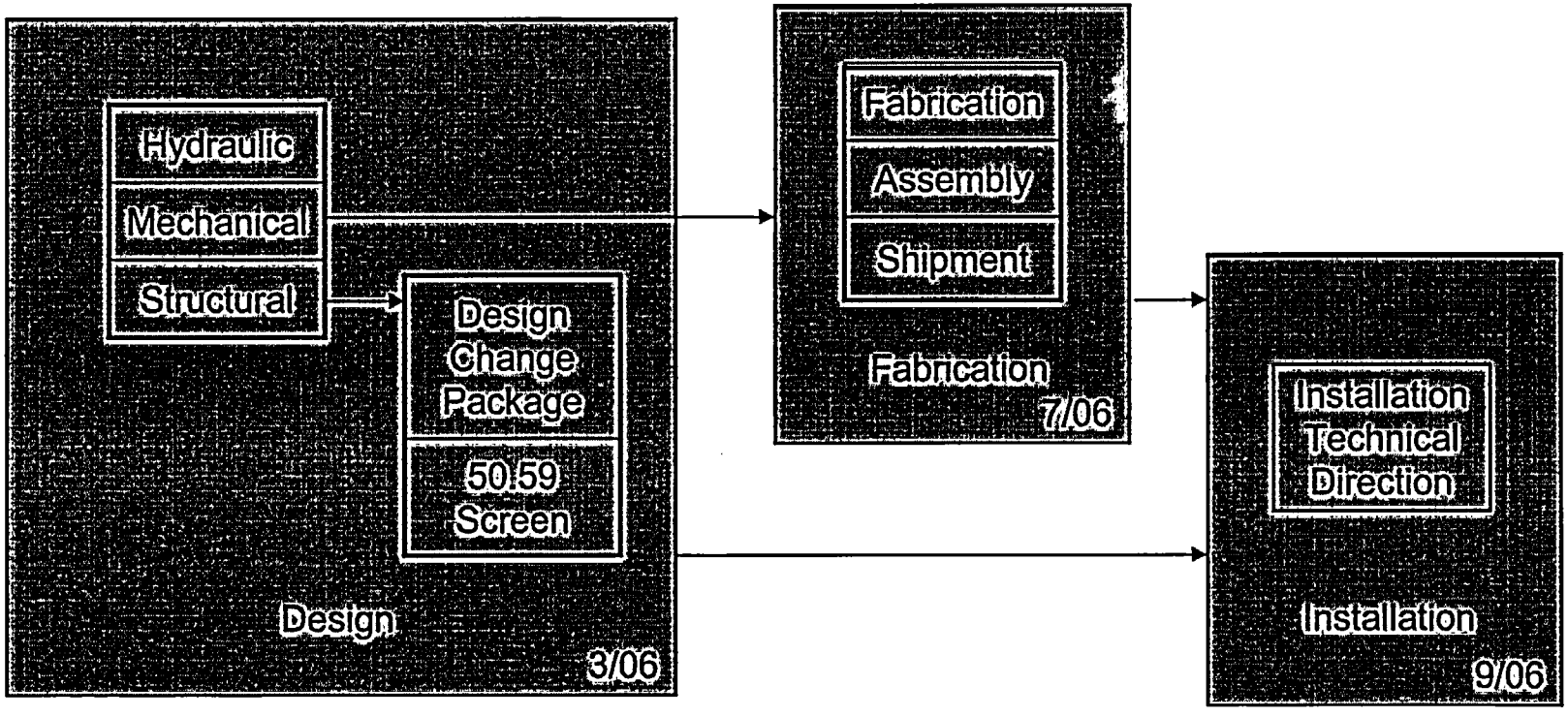

GE Strainer Sizing Methodology - FCS

FCS Design Inputs

- Water Level
  - Large break LOCA: 3.96 ft
  - Small break LOCA: 3.41 ft
- NPSH Margin
  - Large break LOCA: 2.53 ft
  - Small break LOCA: 1.98 ft
- Flow rates
  - Train A, Strainer B: 4140 gpm
  - Train B, Strainer A: 6700 gpm
- Debris Cases
  - Large break LOCA high Calcium Silicate debris mix
  - Large break LOCA high fiber debris mix
  - Small break LOCA

GE Strainer Sizing Methodology - FCS

- FCS passive strainer design based on plant-specific testing scaled to plant design basis
- Scaled testing to be performed to understand debris head loss characteristics -- three design basis debris scenarios
- Resulting head loss to be scaled for actual plant temperature/size conditions
- Larger scale test will confirm predicted head loss for three debris cases
- Strainer will be sized to:
  - Fit within available containment space (recognizing significant interferences and the need to move considerable containment equipment)
  - Remain within available NPSH margin

GE Strainer Sizing Methodology - FCS

- Test Program
- Current schedule test window: 3 weeks beginning ~July 21, 2005
- Testing to be performed at GE subcontractor test facility using FCS-specific test plan
  - FCS test matrix
  - Debris generated by subcontractor using their procedures
  - Using subcontractor test procedures and approved QA program
- Test facility and test article were illustrated in the 6/29 GE presentation to the NRC (NRC-GE GSI-191 Closed Vendor Meeting)

GE Strainer Sizing Methodology - FCS

- Open Issues
- Chemical Effects - Expect testing in conjunction with industry action
- Downstream Effects - Take grab samples of water flow through the strainer to characterize pass-through material

GE Strainer Technical Safety Evaluation

TSE Outline

1. Introduction and background (benefits to plant of strainer program)
2. Overall description of program including conformance to design requirements and limitations/assumptions
3. Plant operational changes
4. Evaluation of potential areas of concern
5. Effect on plant technical specifications
6. Effect on plant safety analysis
7. Summary and Conclusions

Downstream Effects Evaluations

Steve Raupp

Sargent & Lundy

Identify Affected Components

Identify components in recirculation path with close clearance sub-components

- Active components (RVs, check valves)
- Orifices and Nozzles
- Throttled valves
- Heat Exchanger
- Non-flow instruments
- Valves
- Pumps
- Level Indicators
- Fuel (by Fuel vendor)
- Refueling pool drains

Acceptable Criteria for Blockage

- Review in accordance with WCAP 16406 dated June 30, 2005
- Determine clearances and categorize based on screen mesh
  - "Too small" (less than 110% of screen mesh)
  - "Further evaluation" (110% to 200% of screen mesh)
  - Acceptable (greater than 200% of screen mesh)
- Select maximum opening dimension in new screens (1/8", 1/12" or 1/16" opening)
- Fuel review by fuel vendor

Establish Debris Concentration

- Debris Generation and Transport Calculations define debris at screen
- Filter efficiency used to remove fiber from the initial concentration
  - efficiency (1- Open Area)^2
- Debris removal in accordance with Eq. 7.2-1 with a decay constant of 0.07/hr
- If debris size can be established RMI and particulate filtering by bare screen will be credited.

Determine Wear

- Initially use full post-accident period from USAR
- Use WCAP equations for wear rate
- Compute wear for throttled valves, pump internals, heat exchanger tubes, orifices and nozzles
- Consult OEM for pump hydraulic and vibratory performance with increased wear
- Evaluate wear effects on throttling performance
- Evaluate minimum wall thickness based on wear

Remediation and More Detailed Analyses

- Reduced mission times for components not acceptable with first cut values
- Component modifications to increase allowable mission time, if required
- Debris reduction options to increase allowable mission time, if required

Implementation of Sump Strainer Replacement

Fort Calhoun Modification Process

- Captures and coordinates required analytical and test inputs
- Assures plant impact reviews for configuration control
- Documents output design documents
- Provides installation requirements
- Initiates 50.59 screening/evaluation and incorporates GE safety evaluation
- Initiates Station Modification Acceptance Review Team and Plant Review Committee for approval of design

Interferences with New Strainers

- Spatial Interferences are identified with:
  - TSP baskets
  - Stairwell
  - Small bore piping support
- Interfering items to be modified or relocated
- These design changes will be addressed by the modification process

Questions and Answers

Overview of Expectations – NRC

Future Actions/Meetings