Entergy

Entergy Nuclear Operations, Inc.
Pilgrim Station
600 Rocky Hill Road
Plymouth, MA 02360

Stephen J. Bethay
Director, Nuclear Assessment

June 29, 2005

U.S. Nuclear Regulatory Commission
ATTN: Document Control Desk
Washington, DC 20555-0001

SUBJECT: Entergy Nuclear Operations, Inc.
Pilgrim Nuclear Power Station
Docket No. 50-293
License No. DPR-35

Pilgrim Fourth Ten-Year Inservice Inspection Program Plan, and the Associated Relief Requests for NRC Approval

LETTER NO: 2.05.045

Dear Sir or Madam:

By this letter Entergy submits the attached Pilgrim Nuclear Power Station (PNPS) Fourth Ten-Year Inservice Inspection (ISI) Program Plan (PNPS-RPT-05-001, Rev. 0) pursuant to 10 CFR 50.55a(a)(g)(4)(ii) and requests NRC approval of associated relief requests pursuant to 10 CFR 50.55a(a)(3).

PNPS Fourth Ten-Year ISI Interval will commence on July 1, 2005 and ends on June 30, 2015.

This ISI Program Plan is developed in accordance with the 1998 Edition of the American Society of Mechanical Engineers (ASME) Boiler and Pressure Vessel Code Section XI with the 2000 Addenda. The ISI Program Plan is divided into five major sections:

1.0 Introduction and Plan Description
2.0 ISI System / Component Exemptions & Examination Development
3.0 Code Compliance Inservice Inspection Program Summary
4.0 Inservice Inspection Components & Schedule
5.0 Appendices

The ISI Program Plan contains the Second Ten-Year IWE Containment Inspection program and Second Ten-Year Risk Informed ISI program. Both programs have been aligned with the regular ISI program interval schedule.

A047

The Code of Record for the Fourth Ten-Year ISI Interval, the Second IWE Containment Inspection interval, and the Second RI-ISI interval will be the ASME Section XI Code, 1998 Edition with 2000 Addenda. Accordingly, this letter requests NRC acceptance for these programs to be based upon the aforementioned Edition/Addenda.

Fourth Ten-Year ISI Relief Requests for NRC Approval:

The relief requests associated with the Fourth Ten-Year ISI Program Plan and any precedent are contained in Section 5, Appendix B of the Program Plan. There are thirteen (13) relief requests. Two (2) relief requests PRR-28 (MB6074) and PRR-39 (MC2496) were previously approved for use during the 4th interval are included for information. In addition, three (3) requests related to the use of subsequent editions and addenda of Section XI of the ASME Code are included in Appendix D.

Entergy requests NRC review and approval of the ISI Relief Requests as soon as possible, preferably by July 1, 2006.

This submittal represents ISI Program Plan and does not contain any regulatory commitments.

If you have any questions on this transmittal, please contact Mr. Bryan Ford, Licensing Manager at 508-830-8403.

Sincerely,

Stephen J. Bethay

SJB/wgl

Attachment: 1. PNPS Fourth Ten-Year ISI Program Plan, including IWE Containment Inspection Program (PNPS-RPT-05-001, Rev. 0)

cc: Regional Administrator, Region 1
w/o U.S. Nuclear Regulatory Commission
475 Allendale Road
King of Prussia, PA 19406

Mr. James Shea, Project Manager
Project Directorate I
Mail Stop: 0-8B-1
Division of Licensing Project Management
Office of Nuclear Reactor Regulation
U.S. Nuclear Regulatory Commission

Senior Resident Inspector
Pilgrim Nuclear Power Station

ATTACHMENT 1

PNPS Fourth 10-Year ISI Program Plan

PNPS-RPT-05-001, Rev. 0

Entergy
Nuclear Northeast

Entergy Nuclear Generation Company
PILGRIM NUCLEAR POWER STATION (PNPS)
Plymouth, Massachusetts

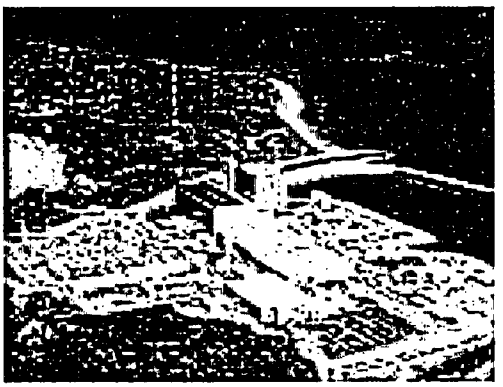

ASME B&PV CODE SECTION XI
FOURTH TEN-YEAR INSPECTION INTERVAL
INSERVICE INSPECTION (ISI) PROGRAM PLAN

July 1, 2005 to June 30, 2015

Commercial Service Date:	**June 8, 1972**
NRC Docket Number:	**50-293**
Facility Operating License:	**DPR-35**
Document Number:	**PNPS-RPT-05-001**
Revision Number:	**0**
Document Date:	**July 1, 2005**

Prepared by:
Entergy Nuclear Northeast
440 Hamilton Avenue
White Plains, New York 10601

Entergy
Nuclear Northeast

Entergy Nuclear Generation Company
PILGRIM NUCLEAR POWER STATION (PNPS)
Plymouth, Massachusetts

ASME B&PV CODE SECTION XI
FOURTH TEN-YEAR INSPECTION INTERVAL
INSERVICE INSPECTION (ISI) PROGRAM PLAN

July 1, 2005 to June 30, 2015

Commercial Service Date:	**June 8, 1972**
NRC Docket Number:	**50-293**
Facility Operating License:	**DPR-35**
Document Number:	**PNPS-RPT-05-001**
Revision Number:	**0**
Document Date:	**July 1, 2005**

Prepared by:
Entergy Nuclear Northeast
440 Hamilton Avenue
White Plains, New York 10601

Engineering Report No.: PNPS-RPT-05-001
Revision: 0

Entergy
Nuclear Northeast

ENTERGY NUCLEAR NORTHEAST

Engineering Report Title:

ASME B&PV Code Section XI Fourth Ten-Year Inspection Interval Inservice Inspection (ISI) Program Plan

Revision 0
(July 1, 2005 to June 30, 2015)

Engineering Report Type:

New [x] Revision [ ] Cancelled [ ] Superceded [ ]

Applicable Site(s)

IP1 [ ] IP2 [ ] IP3 [ ] JAF [ ] PNPS [x] VY [ ]

Quality-Related: [x] Yes [ ] No

Prepared by: Aturo Smith & Dennis P. Pennino / Aturo Smith D.P. Pennino Date: 6/3/05 6/3/05
Responsible Engineer (Print Name / Sign)

Verified / Reviewed by: Richard Pardee & Glenroy Smith / Richard Pardee R. Pardee Glenroy Smith Date: 6/7/05
Design Verifier / Reviewer (Print Name / Sign)

Reviewed by: Curt Hanson / Curt Hanson Date: 6/6/05
Authorized Nuclear In-Service Inspector (ANII)
(Print Name / Sign)

Approved by: Robert Penny / Date: 6/20/05
Manager, WPO Eng. Programs (Print Name / Sign)

Multiple Site Reviews			
Site	Design Verifier / Reviewer (Print Name / Sign)	Supervisor (Print Name / Sign)	Date

TABLE OF CONTENTS

SECTION	DESCRIPTION	PAGE(S)
	Signature Page	-
	Table Of Contents	i-ii
	Revision Summary Sheets	iii-iv
	Summary Of Changes	v
1.0	**INTRODUCTION AND PLAN DESCRIPTION**	1-1
1.1	Introduction	1-2
1.2	Inservice Inspection Boundary Development	1-7
1.3	Component and System Quality Group Boundary Classifications	1-10
1.4	ASME Section XI Code Items Not Controlled By this Plan	1-13
1.5	Augmented and Alternative Inservice Inspection Requirements	1-14
1.6	Repairs and Replacements	1-23
1.7	Administrative Controls	1-24
1.8	ASME Section XI Code Cases	1-24
1.9	Relief Requests	1-30
1.10	Non-Destructive Examination (NDE)	1-31
1.11	ASME Section XI System Pressure Testing	1-34
1.12	Calibration Blocks	1-36
2.0	**ISI SYSTEM / COMPONENT EXEMPTIONS & EXAMINATION DEVELOPMENT**	2-1
2.1	Class 1 Systems / Components (IWB)	2-2
2.2	Class 2 Systems / Components (IWC)	2-16
2.3	Class 3 Systems / Components (IWD)	2-24
2.4	Class MC Components (IWE)	2-27
2.5	Class 1, 2, 3, and MC Component Supports (IWF)	2-36
2.6	Risk-Informed Piping Examinations (Category R-A)	2-37
3.0	**CODE COMPLIANCE INSERVICE INSPECTION PROGRAM SUMMARY**	3-1
3.1	ASME Section XI Inservice Inspection Component Summary Tables	3-2
3.2	Category R-A Element Selection And Scheduling	3-5
4.0	**INSERVICE INSPECTION COMPONENTS & SCHEDULE**	4-1
4.1	Tables of ASME Section XI Code Components And Schedules	4-2
5.0	**APPENDICES**	5-1

TABLE OF CONTENTS (continued)

APPENDIX	DESCRIPTION	PAGE(S)
A	**ASME SECTION XI CODE CASES** Applicable Fourth Interval Code Cases	A-1
B	**INSERVICE INSPECTION RELIEF REQUESTS** Table B.1 4th Inservice Inspection Interval Relief Request Index Table B.2 Previously Approved Relief Requests Applicable to the 4th Interval Table B.3 Prior Interval Pending Relief Requests Applicable to the 4th Interval	B-1 B-2 B-4 B-4
C	**INSERVICE INSPECTION CALIBRATION STANDARDS** Table C.1 ISI Calibration Standards	C-1 C-3
D	**10CFR50.55a(g)(4)(iv) REQUESTS** Proposed Uses of Subsequent Code Editions and Addenda Table D.1 10CFR50.55a(g)(4)(iv) Request Index	D-1 D-2 D-2
E	**INSERVICE INSPECTION PROGRAM DRAWINGS** Table E.1 Inservice Inspection Boundary Drawings Table E.2 Piping Isometric Drawings Table E.3 IWE Containment Inspection Program Drawings	E-1 E-2 E-4 E-8
F	**REFERENCES AND CORRESPONDENCE** Applicable Fourth Interval References and Correspondence	F-1
G	**ISI PROGRAM GLOSSARY** Glossary of Various ISI Program-Related Terms	G-1

REVISION SUMMARY SHEET

SECTION	EFFECTIVE PAGE(S)	REVISION	DATE
	MAIN SECTIONS		
1.0	1-1 through 1-36	0	07/01/05
2.0	2-1 through 2-41	0	07/01/05
3.0	3-1 through 3-5	0	07/01/05
	Table 3.1-1: 1 through 23	0	07/01/05
	Table 3.1-2: 1 through 19	0	07/01/05
	Table 3.1-3: 1 through 5	0	07/01/05
	Table 3.1-4: 1 through 3	0	07/01/05
	Table 3.1-5: 1 through 17	0	07/01/05
	Table 3.1-6: 1 through 5	0	07/01/05
	Table 3.1-7: 1 through 3	0	07/01/05
4.0	4-1 through 4-4	0	07/01/05
	Table 4.1-1: 1 through 4	0	07/01/05
	Table 4.1-2: 1 through 7	0	07/01/05
	Table 4.1-3: 1 through 6	0	07/01/05
	Table 4.1-4: 1 through 27	0	07/01/05
	Table 4.1-5: 1 through 1	0	07/01/05
	Table 4.1-6: 1 through 9	0	07/01/05
	Table 4.1-7: 1 through 24	0	07/01/05
	Table 4.1-8: 1 through 1	0	07/01/05
	Table 4.1-9: 1 through 14	0	07/01/05
	Table 4.1-10: 1 through 1	0	07/01/05
	Table 4.1-11: 1 through 41	0	07/01/05
	Table 4.1-12: 1 through 15	0	07/01/05
	Table 4.1-13: 1 through 16	0	07/01/05
	Table 4.1-14: 1 through 87	0	07/01/05
	Table 4.1-15: 1 through 20	0	07/01/05
	Table 4.1-16: 1 through 16	0	07/01/05
	Table 4.1-17: 1 through 8	0	07/01/05
	Table 4.1-18: 1 through 6	0	07/01/05

REVISION SUMMARY SHEET (cont'd)

SECTION	EFFECTIVE PAGE(S)	REVISION	DATE
5.0	APPENDICES		
A	A-1 through A-4	0	07/01/05
B	B-1 through B-120	0	07/01/05
C	C-1 through C-6	0	07/01/05
D	D-1 through D-5	0	07/01/05
E	E-1 through E-8	0	07/01/05
F	F-1 through F-6	0	07/01/05
G	G-1 through G-8	0	07/01/05

SUMMARY OF CHANGES

REVISION	SUMMARY OF CHANGES
0	N/A – initial revision.

SECTION 1.0

INTRODUCTION AND PLAN DESCRIPTION

1.0 INTRODUCTION AND PLAN DESCRIPTION

1.1 Introduction

This document establishes the Fourth Ten-Year Interval Inservice Inspection (ISI) Program Plan for Pilgrim Nuclear Power Station (PNPS) in accordance with the requirements of 10CFR50.55a(b)(2). This Plan outlines the requirements for the inspection of:

- ISI Class 1, 2, and 3 pressure retaining components and their supports in accordance with ASME Section XI, Subsections IWA, IWB, IWC, IWD, and IWF.
- ISI Class MC pressure-retaining components (Primary Containment) and their integral attachments in accordance with ASME Section XI, Subsection IWE.

Note that under 10CFR50.55a(g), the Subsection IWE Containment Inservice Inspection Program does not have to be submitted to the NRC staff for approval. The program elements and the required documentation must, however, be maintained on site for audit.

This Inservice Inspection Program Plan is established to provide the following:

- Reasonable assurance that leakage or rupture of pressure containing components and piping of the reactor coolant system, portions of the reactor coolant associated auxiliary systems, portions of the emergency core cooling systems, and portions of the main steam and feedwater systems will not occur.
- An initial reference base nondestructive examination of components and piping against which future examination determinations can be compared.
- Sufficient nondestructive testing of systems and components during refueling outages to assure that the structural integrity of these systems and components remains unchanged from previous safe conditions, or that any observed changed conditions are acceptable for continued station operation.
- Compliance with the principles and intent of ASME Section XI insofar as practical and possible by existing designs, equipment arrangements, access as available, and encountered radiation levels.

The PNPS ISI Program Plan is in its' Fourth Ten-Year Interval. This Inservice Inspection Plan will be effective from July 1, 2005, through and including, June 30, 2015.

Pilgrim is a General Electric designed, single cycle, forced circulation Boiling Water Reactor (BWR) nuclear power plant located on the western shore of Cape Cod Bay in the town of Plymouth, Massachusetts. The nuclear reactor is a BWR 3/4 design with a 655 MWe original rating. There have been a number of power uprates since the commencement of commercial operation. The current gross generation rating is 714 MWe at the reactor licensed thermal power limit of 2,028 MWth. Pilgrim Station is owned by the Entergy Nuclear Generation Company and is operated by Entergy Nuclear Operations, Inc. (Entergy Nuclear).

This ISI Program Plan is developed in accordance with the requirements delineated in the 1998 Edition of the American Society of Mechanical Engineers (ASME) Boiler and Pressure Vessel Code Section XI with the 2000 Addenda. All inservice examinations and system pressure tests will be performed in accordance with the schedule of Inspection Program B of IWA-2430 and IWA-2432.

Component examinations performed as alternatives to, or to augment, the Section XI Code requirements are also discussed within this ISI Program Plan. These alternative and augmented programs include Risk-Informed ISI, BWRVIP, FAC, GL 89-13, as well as other programs, and are discussed in Section 1.5 of this ISI Program Plan.

The key features of this Plan include the Introduction and Plan Description, Relief Requests, Summary Tables, and Scheduled Examination Tables. It includes a listing of component drawings, piping isometric drawings, components subject to examination, and a component examination schedule. Relief requests, including supporting documentation, are provided for those components where meeting the code requirements is impractical or unnecessarily burdensome.

The details of the Inservice Inspection Program are addressed in other documents that are available at the Pilgrim Station. These documents include, but are not limited to: the ISI Topical Design Basis Document (TDBD), inservice inspection boundary drawings, piping isometric drawings, a component database listing of each weld, valve, support, etc., as well as various other documents supporting implementation of the ISI Program.

The ISI TDBD provides the bases for inservice inspections at PNPS. The inspection bases include regulatory and licensing commitments. The ISI TDBD includes a review of augmented examination commitments, the Containment Inspection Program, BWRVIP expectations, snubber examinations, 10CFR50 Appendix J testing, and repair/replacement criteria as they relate to ASME Section XI.

1.1.1 Inspection Interval

The commercial operating license date for the Pilgrim Nuclear Power Station was June 8, 1972. PNPS did not formally commit to an ISI Program until 1979. However, the First ISI Ten-Year Inspection Interval is considered to have spanned the time period from June 8, 1972 through December 7, 1982. Further details may be found in the Topical Design Basis Document.

The Second Ten-Year Inspection Interval started December 8, 1982. As allowed by ASME Section XI, Paragraph IWA-2430(e), the Second Inspection Interval was extended to June 30, 1995 to account for the total time when PNPS was not in operation during this period.

The PNPS Third Ten-Year Inspection Interval ISI program plan was effective from July 1, 1995, through and including June 30, 2005.

The PNPS Fourth Ten-Year Inspection Interval and this ISI Plan will be effective from July 1, 2005, through and including June 30, 2015. It should be noted that the plant's current (original) operating license (DPR-35) will expire on June 8, 2012. This date falls within the 4th Interval.

The following table summarizes the PNPS ISI 10-Year Inspection Interval dates:

PNPS Interval Dates Summary			
10-Year Inspection Interval	*Interval Start Date*	*Interval End Date*	*Length of Interval*
1	June 8, 1972	December 7, 1982	10 years, 6 months
2	December 8, 1982	June 30, 1995	12 years, 6 months
3	July 1, 1995	June 30, 2005	10 years, 0 months
4	July 1, 2005	June 30, 2015	10 years, 0 months

With the exception of the 4th 10-Year Inspection Interval examinations that may be deferred until the end of the inspection interval as specified in Tables IWB-2500-1 and IWE-2500-1, Fourth Interval Inservice Inspections shall be performed in accordance with Inspection Program B as outlined in IWA-2432, IWB-2412, IWC-2412, IWD-2412, IWE-2412, and IWF-2410 of ASME Section XI:

Inspection Program B			
Inspection Interval	*Inspection Period, Calendar Years of Plant Service Within the Interval*	*Minimum Examinations Completed, %*	*Maximum Examinations Credited, %*
All	3	16	50
	7	50*	75
	10	100	100

* If the first period completion percentage for any examination category exceeds 34%, at least 16% of the required examinations shall be performed in the second period.

The inspection schedule for the Fourth Interval is divided into three ISI Periods such that approximately one third of the interval's inspections will be completed every period. Successive inspections shall be in accordance with IWB-2420, IWC-2420, IWD-2420, IWE-2420, and IWF-2420. Deviations to inspection schedules may occur provided compliance with Code requirements is maintained. The following table summarizes the PNPS Fourth Interval Inspection Periods Summary Dates.

PNPS Fourth Interval Inspection Periods Summary Dates				
Inspection Period	*Period Start Date*	*Period End Date*	*Years of Plant Operation Within Period**	*Plant Refueling Outages within Period*
1	July 1, 2005	June 30, 2009	4 years, 0 months	RFO-16 (Spring 2007) RFO-17 (Spring 2009)
2	July 1, 2009	June 30, 2012	3 years, 0 months	RFO-18 (Spring 2011)
3	July 1, 2012	June 30, 2015	3 years, 0 months	RFO-19 (Spring 2013) RFO-20 (Spring 2015)

* IWA-2430(d)(3) permits Inspection Periods to be reduced or extended by as much as one (1) year to enable inspections to coincide with plant outage schedules. This is the basis for the 4th Interval 4/3/3 period scheduling vs. the 3/4/3 period scheduling stated in Tables IWB-2412-1, IWC-2412-1, IWD-2412-1, IWE-2412-1, and IWF-2410-2.

ASME Boiler & Pressure Vessel Code, Section XI (1998 Edition, 2000 Addenda) Paragraphs IWA-2430(d) and IWA-2430(e), permit inspection intervals to be reduced or extended by as much as one year and to be extended for a period equivalent to any plant outages in excess of 6 consecutive months. Changes to the stated Inspection Interval or Inspection Period dates, if deemed necessary, will be documented via Plan Amendments.

An integral part of this Fourth Ten-Year Interval Inservice Inspection Plan is the IWE Containment Inservice Inspection Program Plan previously described in PNPS Procedure QA 20.03 (now Procedure No. NE15.14). The IWE Containment Inservice Inspection Plan described in PNPS Procedure QA 20.03 was effective from September 9, 1998, through and including September 9, 2008, with the first examinations taking place in 1999. This time period represented the First Ten-Year Interval for IWE containment inspections at PNPS. Containment inservice examinations scheduled for the first 40-month period of the original QA 20.03 Ten-Year IWE Inspection Interval were completed by September 9, 2001, as required by the regulation for expedited examinations. These examinations now serve the same purpose as preservice baseline examinations.

1.1.1.1 Alignment of Intervals

The Second Ten-Year Interval for IWE containment inspections at PNPS commences on July 1, 2005 coincident with the start of the 4th 10-Year ISI Program Interval.

Similarly, the Second Ten-Year Interval for Risk-Based ISI inspections at PNPS commences on July 1, 2005 coincident with the start of the 4th 10-Year ISI Program Interval. Risk-Based ISI inspections started in RFO-13 (Spring 2001) for Category B-J & B-F carbon steel and IGSCC Category A welds. The ASME Section XI Code required minimum examinations (34%) were completed in the 1st ISI Period of the 3rd Ten-Year ISI Interval. The remaining sixty-six percent (66%) of the RI-ISI Program inspections were completed by the end of the 3rd Ten-Year ISI Interval, as required by the RI-ISI SER. 100% of the RI-ISI inspections will be completed within the 4th 10-Year ISI Interval. Continued use of the RI-ISI Program in the 4th Ten-Year ISI Interval is requested via Relief Request PRR-10.

1.1.2 **PNPS Original Construction Codes of Record**

1.1.2.1 At the time Pilgrim Station was constructed, the ASME Boiler and Pressure Vessel Code only covered nuclear vessels and associated piping up to and including the first isolation or check valve. Therefore, piping, pumps and valves were built primarily to the rules of USAS B31.1.0 - 1967 Edition. Piping modifications such as the recirculation system pipe replacement were constructed to ASME Section III.

1.1.2.2 The Design/Fabrication Code for the Pilgrim Station BWR Mark I containment is ASME Section III 1965 edition and the latest addenda as of June 9, 1967, including Code Cases 1330-1 and 1177-5. The containment vessel is a Class "B" vessel as defined in this Code.

1.1.2.3 The Reactor Vessel Code of Construction is the ASME Boiler and Pressure Vessel Code, Section III, 1965 Edition through Winter 1966 Agenda.

1.1.2.4 10CFR50.55a(c)4 states that the applicable Code edition for a reactor coolant pressure boundary (RCPB) component is the Code Edition and addenda approved by the NRC at the time of construction permit issuance (B31.1).

1.1.3 **PNPS Fourth Ten-Year Interval ASME Code of Record**

1.1.3.1 The regulations in 10CFR50.55a(g)(4) establish the effective ASME Code edition and addenda to be used by licensees for performing inservice inspections of components (including supports). Paragraph 50.55a(g)(4)(ii) requires the use of the latest edition and addenda that has been incorporated by reference 1 year prior to the beginning of each 120-month ISI interval. This is considered the Code of Record.

1.1.3.2 This PNPS Fourth Ten-Year ISI Program Plan is based on the requirements of 10CFR50.55a(b)(2) and was developed in accordance with the requirements delineated in the 1998 Edition of the American Society of Mechanical Engineers (ASME) Boiler and Pressure Vessel Code Section XI with the 2000 Addenda, Subsections IWA, IWB, IWC, IWD, IWE, and IWF per Inspection Program B of IWA-2432; including applicable ASME Code Cases and Relief Requests. Accordingly, this Inservice Inspection Plan provides the details necessary for performing the inservice inspection of the Pilgrim Class 1, 2, 3, and MC pressure retaining components and supports. Relief has been requested from those portions of the Code that would constitute a burden to PNPS without a compensating increase in quality and safety, and from Code requirements that are considered impractical. The applicable Relief Requests are discussed in Section 1.9 of this Program Plan and applicable ASME Code Cases are discussed in Section 1.8. Augmented in-service inspections previously committed to by Boston Edison and/or Entergy Nuclear Northeast are also included. These augmented inservice inspection requirements are further discussed in Section 1.5.

1.1.3.3 Alignment of IWE Program Code Edition / Code of Record

The Code of Record for the First Ten-Year Interval IWE Containment Inspection Program was the 1992 Edition of ASME B&PV Code Section XI, with the 1992 Addenda, Inspection Program B, as required by the 1996 amendments to 10CFR50.55a. The First Ten-Year Interval IWE was originally scheduled to end September 9, 2008, and has been changed to end June 30, 2005.

The Second Ten-Year Interval for IWE containment inspections at PNPS commences on July 1, 2005 coincident with the start of the 4th 10-Year ISI Program Interval.

The 1998 Edition of ASME B&PV Code Section XI, with the 2000 Addenda, Inspection Program B, will be the Code of Record for the Second Ten-Year IWE Containment Inspection Program Interval. This is the same Code of Record for the 4th Ten-Year ISI Interval.

1.1.3.4 Use of Subsequent Editions and Addenda of ASME Section XI

In accordance with 10CFR50.55a(g)(4)(iv), inservice examination of components and system pressure tests may meet the requirements set forth in subsequent editions and addenda of ASME Section XI that are incorporated by reference in paragraph 10CFR50.55a(b), subject to the limitations and modifications listed in paragraph 10CFR50.55a(b), and subject to USNRC approval. Portions of editions or addenda

may be used provided that all related requirements of the respective editions or addenda are met.

Appendix D, Table D.1 provides a summary listing and revision status of all 10CFR50.55a(g)(4)(iv) requests related to the use of subsequent editions and addenda of Section XI for inservice inspections at PNPS during the Fourth Ten-Year Interval. Each individual 10CFR50.55a(g)(4)(iv) request for the Fourth Ten-Year Interval is included in Appendix D.

1.2 Inservice Inspection Boundary Development

In accordance with ASME Section XI, Paragraph IWA-1400, it is the Owner's responsibility to determine the appropriate code classes for each component of the power plant and to identify the system boundaries for each class of components. Section XI refers to 10CFR50 for the classification criteria. 10CFR50.2 defines the reactor coolant pressure boundary (RCPB) and 10CFR50.55a requires that it be classified as Class 1. 10CFR50.55a(d)(1) and (e)(1) Footnote 9 states that guidance for classifications may be found in Regulatory Guide 1.26 and Section 3.2.2 of NUREG-0800.

Pilgrim was designed and constructed prior to the issuance of the Regulatory Guides. Therefore systems and components were not classified under the quality group classifications defined in Reg. Guide 1.26. Also, Pilgrim is not required to meet the Standard Review Plan requirements.

The Code Classifications for ISI P&IDs were prepared using Reg. Guide 1.26, NUREG-0800, and NUREG-0803 (for CRD) and includes only those systems which are important to safety that contain water, steam, or radioactive materials. This is a departure from the guidance provided in S&SA 84-62, "*Resolution of Code Safety Class Concerns*" which states that ANSI 52.1 should be used. PNPS is not committed to this standard and applying Reg. Guide 1.26 for ISI Classifications is consistent with other utilities' programs. There are some discrepancies between the Reg. Guide and PNPS classifications. For instance, the Main Steam and Feedwater piping beyond the containment isolation valves and reactor building wall is not safety-related per the Q-List or FSAR and is therefore classified as Quality Group D. The Reg. Guide and SRP require that the piping up to the turbine stop valve and up to the first valve capable of automatic closure in the feedwater lines be classified as Quality Group B.

In accordance with ASME Section XI, Paragraph IWB-1220(a) and 10 CFR 50.55a, piping may be exempted from the volumetric and surface examinations of ASME Section XI, provided they are connected to the reactor coolant pressure boundary, and are of such size and shape that upon a postulated rupture, the resulting flow of coolant under normal operating conditions is within the make-up capacity of the plant. As allowed by Section XI, IWB-1220(a), a calculation was performed in 1983 to justify the exclusion of water and steam lines from ISI Class 1 surface and volumetric examination based on normal system makeup (ref. BECo Memorandum No. NED 90-300 and NUTECH Letter No. BOS-06-011). Liquid lines were defined as those that penetrate the reactor pressure vessel (RPV) below the normal water level and steam lines were defined as those that penetrate the RPV above the normal water level. As was documented in this calculation, Class 1 piping in water systems with an inside diameter of 1.10" or less, and piping in steam systems with an inside diameter of 2.20" or less qualify for the make-up capacity exemption of IWB-1220(a).

Components subject to inservice inspection are shown on the Inservice Inspection P&IDs listed in Table E.1 of Appendix E of this Inservice Inspection Plan. Pursuant to 10 CFR 50.55a, the inservice inspection requirements of ASME Section XI have been assigned to these components within the constraints of existing plant design.

The Pilgrim Station engineering design effort preceded the guidance provided by the ASME Code for Inservice Inspection of Nuclear Reactor Coolant Systems, and, therefore, some inaccessibility inherent in systems designs and equipment arrangements restricts the extent of inservice inspections. These inherent limitations are outlined in Section 1.2.1.5, Systems Examination Exclusions. However, an adequate inspection program was originally developed by adopting, insofar as practicable, the principles and intent of the ASME Inservice Inspection Code as interpreted from the draft copy issued in October 1968.

1.2.1 Systems Boundary Development (First Interval)

The Inservice Inspection Program delineates the systems boundaries and contained piping and components which will be inspected and tested during the operating lifetime of the station. During development of the system boundaries for the First ISI Interval, primary consideration was given to the reactor coolant system, portions of the reactor coolant associated auxiliary systems, portions of the Core Standby Cooling System (CSCS), and portions of the main steam and feedwater systems. In certain systems such as feedwater, RCIC, HPCI, and reactor water cleanup systems, isolation through the primary containment is accomplished by means of check valves, which were included in the inspection program.

The following sections are important historically as they describe the basis for the original ISI system boundaries for the First Interval, which have been carried-over into subsequent intervals.

1.2.1.1 Reactor Coolant System Boundary

The Reactor Coolant System (RCS) which contains primary reactor coolant at operating pressure during normal reactor operations is considered to extend out to and include the first containment isolation valve outside the primary containment in the main steam and reactor feedwater piping, and to include the RCS safety and relief valves.

1.2.1.2 Reactor Coolant Associated Auxiliary Systems

Associated reactor auxiliary systems in which reactor coolant is diverted from the RCS either continuously or intermittently in support of normal reactor operation are considered to extend out to and include the first containment isolation valve outside the primary containment. For piping of these reactor auxiliary systems which contain two valves, both of which are normally closed during normal operation, the boundary extends to and includes the second of the valves whether or not the system piping penetrates the primary containment.

1.2.1.3 Core Standby Cooling Systems

Core Standby Cooling Systems (CSCS) which are connected to the RCS and which penetrate the primary containment are considered to extend out to and include the first containment isolation valve outside the primary containment. For piping of these Core Standby Cooling Systems which do not penetrate the primary containment, the boundary is considered to extend to and include the second of two valves normally closed during normal reactor operations.

1.2.1.4 Main Steam and Feedwater Systems

The main steam and feedwater systems which supply reactor feedwater and transport steam to the main turbine generator are considered to extend from and include the nearest isolation valve outside the primary containment in the case of the feedwater system, and out to and include the first containment isolation valve in the main steam lines outside the primary containment.

1.2.1.5 Systems Examination Exclusions

Those components and piping which are part of, and contained within the boundaries outlined in Sections 1.2.1.1, 1.2.1.2, 1.2.1.3, and 1.2.1.4 where postulated failure would not result in loss of reactor coolant that exceeds the capability of normal makeup systems (as defined in Section 120 of the 1969 ISI Draft Code), for the interval of time required to permit the reactor shutdown and orderly cooldown from the respective conditions of startup, hot standby, operation, and cooldown, are excluded from Pilgrim Station's inservice inspection testing requirements as permitted by Section 120d of the Code.

The engineering, design, and construction of the station, in certain areas, do not permit compliance with that portion of Section 243 of the 1969 ISI Code which requires that "where less than all the components are required to be inspected in the first inspection interval, a similar percentage of components not previously inspected (other than the preoperational examinations) shall be required in each successive interval."

No nondestructive inservice inspections are to be performed which require draining of the reactor vessel or removal of the core solely for the purpose of accomplishing testing. Inspections of interior surfaces and internal components of the reactor vessel, particularly in the lower regions, are in this category.

Items included in the Pilgrim program are based on the assumption that the areas involved in testing are reasonably safe for human access, and unless radiation turns out to be much higher than anticipated, testing will be accomplished as intended.

Access available inside containment penetrations, in general, precludes the testing of welded joints.

A considerable number of nozzle-to-pipe connections on the reactor vessel are made by means of "safe ends" using Inconel welding. These welded joints are subject to volumetric and/or surface examinations.

1.2.1.6 Systems Principal Pressure Containing Components and Piping

The principal pressure containing components and piping which were considered for inservice inspection, testing, and examination include the reactor pressure vessel and its appurtenances, pumps, primary pressure piping, and valves.

1.2.1.6.1 Reactor Pressure Vessel and Appurtenances

Components and appurtenances which were subjected to various nondestructive tests and examinations in and around the reactor pressure vessel included the following:

- Reactor pressure vessel shell
- Top vessel closure head
- Reactor vessel nozzles and penetrations

- Closure studs and nuts
- Integrally welded vessel supports
- Reactor vessel cladding
- Closure head cladding

1.2.1.6.2 Pumps

The reactor recirculation pumps in the RCS, located inside the primary containment, were included in the inservice inspection program.

1.2.1.6.3 Primary Pressure Piping

Pressure piping up to and including the extent indicated above, associated with the RCS, the reactor coolant associated auxiliary systems, the CSCS, and portions of the main steam and reactor feedwater systems were subjected to nondestructive testing and examination. Pipe and fittings within the applicable portions of the following systems were included, excepting areas through the containment penetrations:

- Main steam lines
- Reactor feedwater lines
- Reactor recirculation lines
- Control rod drive return lines
- Residual heat removal system lines
- Core spray system lines
- High pressure coolant injection system steam and feed lines
- Reactor core isolation cooling system steam and feed lines
- Standby liquid control system lines
- Cleanup demineralizer system lines

1.2.1.6.4 Valves

Containment isolation and other valves, associated with the piping systems outlined in Section 1.2.1.6.3, which are within the primary containment were subjected to inservice inspection as required.

1.2.2 Exceptions to the ISI Program Plan

Exceptions to the ISI Program Plan are discussed within Section 2.0, "*ISI System / Component Exemptions and Examination Development.*"

1.3 Component and System Quality Group Boundary Classifications

The following documents were used to develop the ISI classification boundaries at PNPS. In addition, PNPS is subject to supplementary inspection criteria due to FSAR and NRC commitments. Additionally a number of boundary issues are subjective and open to interpretation. Pilgrim's Boundary Study Document NED 90-300 and Vectra Report 0025-00241-001 provide further details.

The NED 90-300 boundary review was performed in 1990. In this study, criteria from the required documents were supplemented with guidance from other references that are listed in Section 2.0 of NED 90-300. Where the requirements were unclear, boundaries were established using these reference documents and common sense interpretations of the requirements.

One of the tasks required to complete the Third Interval ISI Program Update at the Pilgrim Nuclear Power Station was to perform a review of the classification boundaries for inservice inspections. This was documented under Vectra Report 0025-00241-001. Vectra documented the information and decisions in developing recommended and required revisions to the ISI boundaries for clarification purposes.

1.3.1 Code of Federal Regulations (10CFR50)

Sections 50.55a(c), (d) and (e), reference 10CFR50.2, and Regulatory Guide 1.26 for the classification of Quality Group A, and Quality Groups B and C components, respectively. Footnote 9 of 10CFR50.55a specifically invokes Regulatory Guide 1.26. 10CFR50.2 provides criteria for the classification of Quality Group A components.

In accordance with 10CFR50.55a(c), the Class I boundaries are described in 10CFR50.2 which defines the reactor coolant boundary as follows:

"All those pressure-containing components of boiling and pressurized water-cooled nuclear power reactors such as pressure vessels, piping, pumps, and valves, which are:

(1) Part of the reactor coolant system, or

(2) Connected to the reactor coolant system, up to and including any and all of the following:

(i) The outermost containment isolation valve in system piping which penetrates primary reactor containment,

(ii) The second of two valves normally closed during normal reactor operation in system piping which does not penetrate primary reactor containment,

(iii) The reactor coolant system safety and relief valves.

For nuclear power reactors of the direct cycle boiling water type, the reactor coolant system extends to and includes the outermost containment isolation valve in the main steam and feedwater piping."

This is the definition which is used for Class I systems at Pilgrim Station.

1.3.2 Regulatory Guide 1.26

10CFR50.55a does not specifically define the boundaries for Class 2 and 3 piping systems, but in Footnote 9 it refers to Regulatory Guide 1.26 and NUREG-0800, Section 3.2.2 for guidance. For Pilgrim Station, guidance is taken from Regulatory Guide 1.26 which provides general boundary definitions for systems containing water, steam or radioactive waste. It should be noted that Regulatory Guide 1.26 specifically states that it does not address other systems such as "...instrument and service air, diesel engine and its generators and auxiliary support systems, diesel fuel, emergency and normal ventilation, fuel handling, and radioactive waste management systems".

1.3.3 ASME Section XI

In accordance with 10CFR50.55a, the inservice inspection of Class 1, 2 and 3 piping and components will be governed by ASME Section XI. When applying the criteria of ASME Section

XI, one of the main considerations is the exemption criteria presented in Paragraphs IWB-1220, IWC-1220 and IWD-1220 for Class 1, 2 and 3 systems respectively. These paragraphs state specific criteria for the exemption of components due to various factors including line size, system function and operating conditions. One exemption which requires particular attention is the exemption of Class 1 components due to make-up flow capacity as presented in IWB-1220(a). As addressed in BECo Boundary Study Document NED 90-300, attached NUTECH Letter No. BOS-06-01 1, and its associated make-up capacity calculation, Class I piping in water systems with an inside diameter of 1.10" or less, and piping in steam systems with an inside diameter of 2.20" or less qualify for the make-up capacity exemption of IWB1220(a).

ASME Section XI Examination Categories B-F and B-J currently contain the requirements for the nondestructive examination (NDE) of Class 1 piping components. The alternative RI-ISI program for piping is described Section 1.5.2.1 of this ISI Program Plan. The RI-ISI Program will be substituted for the Section XI program for Class 1 piping in accordance with 10CFR50.55a(a)(3)(i) by alternatively providing an acceptable level of quality and safety. Other non-related portions of the ASME Section XI Code will be unaffected. For example, existing pressure testing requirements and Class 2 piping inspection requirements remained unchanged. EPRI TR-112657 provides the methodology for defining the relationship between the RI-ISI program and the remaining unaffected portions of ASME Section XI.

1.3.4 Updated Final Safety Analysis Report (FSAR)

In general, the PNPS Updated Final Safety Analysis Report (FSAR) provides limited references to inservice inspection requirements. There are numerous references to inservice inspections interspersed throughout the FSAR, but most are inconsequential discussions on accessibility or testing requirements. FSAR Appendix K addresses the general requirements of Pilgrim's ISI Program, but it only covers the First Interval ISI Program. The PNPS FSAR does not establish any additional commitments which must be incorporated into the ISI Program.

1.3.5 NRC Commitments

In general, Pilgrim Station was designed and constructed prior to many of the Code and Regulatory documents becoming mandatory. The augmented examination requirements which have been issued since the start of plant operation are currently being performed at Pilgrim Station under PNPS Procedure No. NE15.08, "*Control of Augmented Examinations*". Although the documents listed in this procedure provide augmented examination requirements, they do not affect the inservice inspection boundaries.

1.3.6 ISI Classification & Flow Diagrams

The Inservice Inspection classification process described above resulted in system classifications indicating ASME Class 1, 2, 3, and MC components. Class boundaries were developed and are shown on the ISI flow diagrams (ISI P&IDs) listed in Appendix E Table E.1.

For ASME Class 1 components, the requirements of Subsection IWB apply; for ASME Class 2 components, the requirements of Subsection IWC apply; for ASME Class 3 components, the rules of Subsection IWD apply; and for ASME Class MC components, the requirements of Subsection IWE apply. The rules of Subsection IWF for component supports apply to ASME Classes 1, 2, 3, and MC.

The ISI P&IDs are marked with included alphanumeric characters designating the class break boundaries. The flags are not, however, shown at all boundary valves and boundary barriers. Typically, the flag symbol is shown at the major boundary valves, and may not be shown at all small bore valves such as vents, drains, test valves, etc. Class breaks in all cases may nevertheless be identified by the class designation embedded in the pipe line symbols.

Class 1, 2, and 3 boundary breaks at valves wholly within a particular plant system, or class breaks between two different plant systems, are taken to classify the valve at the higher of the two classifications. The first weld after the class break on the side of the valve with the lower classification is designated at the lower classification.

ISI Class I Pressure Boundary Only (PBO) components are shown on the ISI P&IDs with the designation of "P" in the triangular shaped flags and pipe line symbols. The visual examination and system pressure testing requirements for PBO classified components are addressed under the augmented Class I PBO Program discussed in Section 1.5.1.3, formerly goverened by Specification M593.

Appendix E provides a list of the flow diagrams applicable to this program. Copies of these flow diagrams are available through the drawing control system.

1.4 ASME Section XI Code Items Not Controlled By this Plan

The following items that are to be examined under ASME Boiler and Pressure Vessel Code Section XI, 1998 Edition, 2000 Addenda, are not included in this plan to the extent indicated below. They are controlled and covered under PNPS Technical Specifications, PNPS FSAR, or applicable Entergy reports and procedures as follows:

1.4.1 Periodic System Pressure Tests for Class 1, 2, and 3 components will be scheduled and controlled in accordance with Pilgrim site procedures. Test records will be in accordance with IWA-5300. Reports of test results will be included in each inservice inspection summary report. See Section 1.11.2 for further information on periodic system pressure testing.

1.4.2 The Snubber Inservice Inspection Requirements of Article IWF-5000 are discussed in Section 1.5.2.2 of this Inservice Inspection Plan. The snubber attachments to piping and structures will be inspected under this ISI Program Plan in accordance with ASME XI Code requirements. These requirements incorporate ASME Code Case N-491-2. "Pin-to-pin" snubber visual examinations and snubber functional testing will be in accordance with site-specified requirements. These site-specified requirements are currently in accordance with the PNPS FSAR, Appendix B.

1.4.3 The pump and valve testing requirements of Subsections IWP and IWV (Inservice Testing of Pumps and Valves) are not included in this Inservice Inspection Plan. Pump and valve testing is under ASME/ANSI OM, Part 6 and Part 10, respectively. PNPS compliance with Subsections IWP and IWV is addressed in a separate submittal to the NRC staff. The PNPS IST Program is a controlled document that identifies the scope of pumps and valves with their testing requirements for compliance with 10CFR50.55a(f) and NRC Generic Letter 89-04. The program includes valve cold shutdown justifications, refuel outage justifications, O&M Code justifications, and impractical Code requirements (relief requests) in accordance with 10CFR50.55a(f)(5), as applicable.

1.4.4 The ASME Section XI Repair / Replacement Program will be implemented and maintained in accordance with separate plant site procedures. Repair and replacement requirements for Class MC components (Code Subsection IWE) are included within the site's Section XI Repair / Replacement Program.

1.5 Augmented and Alternative Inservice Inspection Requirements

1.5.1 Augmented Inservice Inspection Requirements

Augmented inservice inspection requirements are those examinations that are specified by documents other than the ASME Section XI Code. Augmented examinations will be performed as required by 10CFR50.55a, the NRC, Response to RAIs, or as deemed necessary by the ISI Program. The augmented inservice inspections performed at the Pilgrim Nuclear Power Station are documented in controlled PNPS Procedure No. NE15.08, "*Control of Augmented Examinations*", latest revision. Current augmented examination programs include:

1.5.1.1 Piping Flow-Accelerated Corrosion (FAC) Monitoring

Flow accelerated corrosion (FAC) examinations are performed in accordance within the separate and independent PNPS FAC Program under Specification M577. The PNPS FAC Program satisfies NRC G.L. 89-08 using the guidelines developed by NUMARC and EPRI. Credit is taken for 8 of the 71 RI-ISI components under the FAC Program. Coordination between the FAC Program and the RI-ISI Program is described in the PNPS RI-ISI Template and in Inservice Engineering Report No. PNPS-02Q-402. The FAC Program is relied upon to manage the flow accelerated corrosion damage mechanism in Class 1 piping, but is not otherwise affected or changed by the RI-ISI program.

The following table summarizes the relationship between the FAC and RI-ISI examinations. Note that some of the welds in this table are in carbon steel piping segments that are evaluated for FAC, but the welds are not selected for examination per the FAC Program. In these instances, welds selected for examination per the RI-ISI Program will require volumetric examination like any other weld.

FAC vs. RI-ISI EXAMINATIONS

RISK CAT.	SEGMENT	WELD NO.	EXAMINATION(S) REQUIRED	
			RI-ISI UT	FAC
2(l)	FW-003	6-N4A-12	X	X
2(l)	FW-002	6-N4A-13	X	X
2(l)	FW-005	6-N4B-11	X	X
2(l)	RPV-003	6-N4A-1	X	
2(l)	RPV-004	6-N4B-1	X	
2(l)	RPV-005	6-N4C-1	X	
2(l)	RPV-006	6-N4D-1	X	
2(l)	FW-005	6-N4B-8	X	
2(l)	FW-011	6-N4D-2	X	

FAC vs. RI-ISI EXAMINATIONS

RISK CAT.	SEGMENT	WELD NO.	EXAMINATION(S) REQUIRED	
			RI-ISI UT	FAC
2(l)	FW-013	6-N4C-2	X	
2(l)	FW-016	6-A-10	X	
2(l)	FW-016	6-A-12	X	
4(l)	MS-001	1-A-11		X*
4(l)	MS-001	1-A-12		X*
4(l)	FW-009	6-N4D-14		X*
4(l)	FW-009	6-N4D-15		X*
4(l)	FW-009	6-N4D-16		X*
4(l)	FW-012	6-N4C-11		X*
4(l)	RWCU-001	12-I-4		X*
4(l)	RWCU-001	12-I-5		X*
4(l)	RPV-010	1-D-1	X	
4(l)	MS-001	1-A-7	X	
4(l)	MS-001	1-A-8	X	
4(l)	MS-015	1-A-15	X	
4(l)	MS-016	1-B-15	X	
4(l)	MS-017	1-C-15	X	
4(l)	MS-018	1-D-15	X	

*The FAC Program examination is credited for these 8 RI-ISI components.

1.5.1.2 Salt Service Water (SSW) System Inspections

Routine inspection, maintenance, and test requirements for the PNPS Salt Service Water (SSW) System piping and heat exchanger inspections, along with the associated acceptance criteria, are included in Specification M591 for compliance with NRC G.L. 89-13. These inspections are separate from, but supplement, the Section XI Class 3 ISI component inspections listed in Table 4.1-18. Implementation of SSW System inspections is via PNPS Nuclear Organization Procedure NOP02E1 "Service Water Inspections, Maintenance, and Testing in Response to Generic Letter 89-13".

1.5.1.3 Class I Pressure Boundary Only (PBO) Piping & Components Augmented Inspection Program

1.5.1.3.1 Background & Purpose

During 1998 it was identified that there was not an adequate basis for the ISI boundary change from Class 3 to Class 0 at the Normally-Open RBCCW Non-Essential loop isolation valves. The RBCCW Non-Essential heat transfer components perform no active safety function but are categorized as PNPS Class I "Pressure Boundary Only" (PBO) and the non-essential piping, pipe supports, and components are "MQCI" per the PNPS Q-list. The

non-essential loops of the RBCCW must maintain pressure boundary integrity to protect the RBCCW system inventory.

This augmented inspection program was previously administered under a PNPS site specification. The goal of this augmented inspection program is to provide in-service inspections for the system similar to that required for ASME Class 3 systems.

1.5.1.3.2 RBCCW System and PBO Description

The RBCCW system supplies cooling during all operating modes to the equipment located in the Reactor Building. The system serves as a barrier between the primary system and the Salt Service Water (SSW) system, preventing seawater leakage into the nuclear steam supply system and providing continuous monitoring to prevent radioactive releases into the seawater. The PNPS Class I PBO portions of the system provide cooling water to equipment required during normal on-line and normal shutdown operation of the plant and the PNPS Class I PBO components perform heat transfer functions required for normal operation and normal shutdown of the plant. The PNPS Class I PBO piping and components are not essential for accident mitigation, safe shutdown of the reactor, or to maintain a safe shutdown condition.

The PNPS Class I PBO heat exchangers and coolers are categorized as Non-Essential Heat Loads per the system design basis document (SDBD 30A) and the only safety function is to maintain pressure boundary integrity. No thermal performance or other surveillance testing is required under this augmented program.

The following is a listing of the PNPS Class I PBO piping, pipe supports, and components subject to augmented inservice inspection (visual examination and system pressure testing):

(a) RBCCW System piping between MO-4085A and MO-4085B (Loop-A) and between MO-4009A and MO-4009B (Loop B). The remainder of the system is covered by other examination criteria or has no examination requirements.
(b) Drywell Coolers (VAC-205A to F).
(c) Drywell Coolers (VAC-206A & B).
(d) Recirc. Pump Seal Water Coolers (E-213A & B).
(e) Recirc. Pump Lube Oil Coolers (E-214A & B).
(f) CRD Pump Thrust Bearing Coolers (P-209A & B).
(g) CRD Pump Lube Oil Coolers (E-212A & B).
(h) CRD Pump Area Coolers (VAC-203A & B).
(i) Clean-Up Recirc Pump Cooling System (E-215A & B).
(j) Clean-Up Demineralizer Non-Regen. Heat Exchangers (E-216A & B).
(k) Fuel Pool Heat Exchanger (E-206B only)
(l) MG Set Area Coolers (VAC-207A to D).
(m) MG Set Fluid Coupling & Bearing Oil Coolers (E-211A & B).

Table 3.1-7 of this ISI Program Plan contains a summary listing of PBO components.

1.5.1.3.3 Inservice Inspection Requirements And Examination Criteria

The examinations performed under this augmented program perform the following:

(a) Detection of leakage from pressure retaining piping and components and/or abnormal leakage from components, i.e., VT-2 examinations during system pressure tests, i.e., IWD-5221 system leakage tests. Specifically:

1. Perform a visual examination for leakage during the system leakage test. The frequency of this inspection shall be once every ten years. The time between inspections may be increased or decreased up to one year in order to coincide with a plant outage as is necessary to inspect portions of the system not accessible during normal plant operation.

2. The examination shall determine the integrity of the pressure boundary of the piping and components and shall document the location of any leakage in a PCRS Condition Report. PNPS Engineering will use this information to determine if additional examinations or repair are required.

3. If leakage occurs at a bolted connection, then the bolting in the vicinity of the leak shall be removed and visually examined for corrosion per ENN and/or PNPS site NDE procedures if the bolting material is susceptible to corrosion in the particular service application.

(b) Determine the general mechanical and structural condition of components and their supports (including integral attachments) such as the verification of clearances, settings, physical displacements, looser missing parts, debris, corrosion, wear, erosion, or the loss of integrity at bolted and welded connections, i.e., VT-3 examinations. Specifically:

1. Perform a visual examination of approximately 10 percent of all pipe supports, restraints, and spring hangers, including integral attachments, for piping of greater than 4" Nominal Diameter each inspection interval. Integral attachments of supports and restraints to PBO Class I components that are 4 in. nominal pipe size and smaller are exempt from visual examination.

2. Perform a visual examination of the supports for the following components, including integral attachments, each inspection interval:

   - Fuel Pool Heat Exchanger E-206B.
   - Clean-Up Demineralizer Non-Regenerative Heat Exchangers E-216A & B.
   - MG Set Fluid Coupling & Bearing Oil Coolers E-211A & B.

3. For multiple components of similar design, function, and service only one of the multiple components need be examined.

4. The examinations shall meet the requirements of the applicable ENN and/or PNPS site NDE procedures.

5. The acceptance criteria for the VT-3 examination shall be as specified in the applicable ENN and/or PNPS site NDE procedures. Documentation of results shall be as specified in those procedures and all rejectable indications shall be documented via PCRS Condition Reports.

6. The expansion criteria for the VT-3 examination shall be as specified in the applicable ENN and/or PNPS site NDE procedures. In addition, Engineering may recommend expansion of scope dependent on the outcome of evaluations performed for rejectable indications.

1.5.1.3.4 Repair and Replacement Guidelines for PBO Components

(a) Repairs/Replacements shall be performed in accordance with the original Construction Code for the system or component. Later editions and addenda of the Construction Code, and Code Cases may be used.

(b) Repairs shall include an evaluation of the suitability of the repair and consideration of the cause of failure. This evaluation shall be done via a PDC/FRN, PR Evaluation, or Engineering Evaluation per NE1 6.04. If the intended life of the repair is less than the remainder of the design life of the item being repaired, the intended life of the repair shall be documented as part of the repair plan.

(c) Replacements shall include an evaluation of the suitability of a replacement required because of the failure of an item. This evaluation shall be done via a PDC/FRN, PR Evaluation, or Engineering Evaluation per NE16.04. The evaluation shall consider causes of failure of the existing item to ensure that the selected replacement is suitable. If the cause of failure appears to be a deficiency in the specification, design, materials, or fabrication of the existing item, the item to be used for replacement shall reflect appropriate corrective provisions.

(d) Reexamination of items repaired or replaced shall be in accordance with the original examination criteria that identified the problem in addition to any inspections required by the applicable Construction Code.

1.5.1.4 Boiling Water Reactor Vessel and Internals Project (BWRVIP)

The PNPS reactor pressure vessel (RPV) shell weld examinations, IGSCC piping examinations, and vessel internal inspections are performed pursuant to NRC regulations under BWRVIP Guidelines, and PNPS site and ENN Nuclear Management Manual (NMM) procedures. These procedures define the organizational responsibility and the methods by which PNPS complies with NRC and ASME regulations and industry guidance with regard to examination of Reactor Vessel internals.

Topical Design Basis Document TDBD-125 provides the bases for examination of PNPS RPV internals. Regulatory requirements and licensing commitments that had impact on the bases of the Reactor Vessel Internals Inspection Program and associated documents are identified and discussed in the TDBD.

Procedure No. NE21.01, *Reactor Vessel Internals Inspection Implementing Procedure*, addresses the requirements of ASME Section XI, Table IWB-2500-1, Categories B-N-1 and B-N-2; various BWRVIP documents; PNPS commitments to the NRC; PNPS internal commitments; and other Reactor Vessel internals performed for economic reasons as summarized in TDBD-125.

The PNPS Reactor Vessel Internals Inspection Program includes all of the Reactor Vessel internals, with the exception of components that are considered consumable, such as the fuel bundles, control rods, and in-core instruments. The PNPS Reactor Vessel Internals Inspection Program does not include any of the Reactor Vessel pressure boundary. The Reactor Vessel pressure boundary shell, heads, nozzles, flange, and RPV flange bolting are included under this 4th Interval ISI Program Plan.

The BWRVIP augments the ISI Program for the IGSCC Category "D" and "E" safe-end weldments. BWRVIP-75 guidelines are used for IGSCC weld inspection scheduling.

1.5.1.5 High Stress Welds

In PNPS Letter No. 2.89.163, dated 11/6/89, PNPS committed to perform augmented ISI examinations on ten welds in response to NRC Bulletin 88-08, "*Thermal Stresses in Piping Connected to Reactor Coolant System*". In essence, this letter addressed the potential for thermal stratification. The RI-ISI process also evaluated the potential for thermal stratification, but the RI-ISI process is more complete and detailed than the evaluation performed by PNPS in the 11/6/89 letter. As a result, the RI-ISI application takes precedence over the results presented in Letter No. 2.89.163. The RI-ISI evaluation confirmed that six RHR welds listed in the letter were subject to thermal stratification, whereas the two Core Spray System welds were not. The final two welds listed in the letter were from piping that has since been removed from the plant. Of the six RHR welds with thermal stratification assigned, two were selected for examination in accordance with the RI-ISI process.

The augmented ISI program implemented in response to NRC Bulletin 88-08 was included in 2001 within the RI-ISI program, because the potential for thermal fatigue is explicitly considered in the application of the EPRI RI-ISI process. There are no Pilgrim Technical Specification or FSAR commitments associated with NRC Bulletin 88-08. NRC Letter 1.01.046 dated May 2, 2001, contains the NRC SER for the RI-ISI Program for the Third Inspection Interval.

1.5.1.6 Intergranular Stress Corrosion Cracking (IGSCC)

In accordance with the recommendations of EPRI TR-112657, piping welds identified as Category "A" per Generic Letter 88-01 are considered resistant to intergranular stress corrosion cracking (IGSCC) and as such, are assigned a low failure potential provided no other damage mechanisms are present. Examination Category R-A Item No. R1.16 welds classified as Categories "B" through "G" per Generic Letter 88-01 are examined in accordance with the existing PNPS IGSCC augmented inspection program. Coordination between the IGSCC Program and RI-ISI Program is described in the PNPS RI-ISI Template and in Inservice Engineering Report No. PNPS-02Q-402. The RI-ISI Program is credited with the examinations performed under the IGSCC Program.

The following table summarizes the relationship between the IGSCC and RI-ISI examinations. The welds selected per the RI-ISI process which are also in the Generic Letter 88-01 IGSCC Program (IGSCC Categories B through G) are listed below. For the five Risk Category 4(2) welds, IGSCC was the only degradation mechanism identified, so the IGSCC examination can be credited towards both the IGSCC and RI-ISI Programs. The one Risk Category 2(2) weld had crevice corrosion identified as a degradation mechanism, along with IGSCC. Therefore, in order for the IGSCC examination to be credited towards the RI-ISI Program, the IGSCC examination must include the applicable volume identified in EPRI TR-112657 for crevice corrosion. Otherwise, a separate RI-ISI examination would need to be performed to cover the additional examination volume.

IGSCC vs. RI-ISI EXAMINATIONS

RISK CAT.	SEGMENT	WELD NO.	IGSCC CAT.	EXAMINATION(S) REQUIRED	
				RI-ISI UT	IGSCC UT
2(2)	RPV-002	14-B-1	D	X[1]	X

IGSCC vs. RI-ISI EXAMINATIONS

RISK CAT.	SEGMENT	WELD NO.	IGSCC CAT.	EXAMINATION(S) REQUIRED	
				RI-ISI UT	IGSCC UT
4(2)	RPV-011	2R-N2A-1	D		X[2]
4(2)	RPV-012	2R-N2B-1	D		X[2]
4(2)	RWCU-009	12-O-24	C		X[2]
4(2)	CS-002	14-A-10A	D		X[2]
4(2)	CS-004	14-A-3	D		X[2]

[1] The IGSCC ultrasonic examination can be credited towards the RI-ISI Program provided the examination volume stipulated in EPRI TR-112657 for crevice corrosion is examined.

[2] The IGSCC Program examination is credited for these 5 RI-ISI components.

1.5.1.7 Subsection IWE Code Examination Category E-C Augmented Examinations

Subsection IWE Code Examination Category E-C Augmented Examinations are discussed in Section 2.4.4.2.1 of this ISI Program Plan.

1.5.2 **Alternative Inservice Inspection Requirements**

This section lists the alternative requirements to ASME Section XI, 1998 Edition, 2000 Addenda, being adopted for the Fourth Interval Inservice Inspection Program at the Pilgrim Nuclear Power Station. The alternative requirements presented are in accordance with ASME Section XI and 10CFR50.55a, as applicable. Alternative requirements associated with ASME Code Cases are discussed in Section 1.8.

1.5.2.1 Risk-Informed Inservice Inspection (RI-ISI) Program on Class 1 Piping Welds

1.5.2.1.1 Background

From February 2000 through December 2000 during the Third Ten-Year Inspection Interval, a risk-informed inservice inspection (RI-ISI) program was generated for Class 1 piping (i.e., ASME Section XI Examination Categories B-F and B-J) at the Pilgrim Nuclear Power Station. This RI-ISI application was performed in accordance with the Electric Power Research Institute (EPRI) Topical Report No. TR-112657, Rev. B-A, "*Revised Risk-Informed Inservice Inspection Evaluation Procedure*." In addition, the RI-ISI application was conducted in a manner consistent with ASME Section XI Code Case N-578, "Risk-Informed Requirements for Class 1, 2, and 3 Piping, Method B." Utilizing the results of the risk-informed process, a plant specific request for alternative inspections was generated in accordance with regulatory requirements. This request was prepared using a standard template format that was developed by industry representatives NEI and NRC to streamline the RI-ISI submittal and NRC review process.

The Pilgrim Station RI-ISI Template (Inservice Engineering Report No. PNPS-02Q-401) was submitted to the NRC on December 27, 2000, and supplemented in letters to

the NRC dated January 19, 2001, March 8, 2001, March 27, 2001, and April 11, 2001. Based upon the RI-ISI template submittal and supplemental submittals described above, the NRC issued an SER on May 2, 2001, which approved use of the RI-ISI Program at the Pilgrim Nuclear Power Station. The Pilgrim Station Third Ten-Year Interval Inservice Inspection Plan was revised accordingly to incorporate the risk-informed examination criteria for Examination Category B-F and B-J circumferential piping welds

In 2001, as part of this risk-informed inservice inspection program application, Class 1 circumferential piping welds were assigned alternate Examination Category and Code Item Numbers that were consistent with ASME Section XI Code Case N-578-1. For this numbering system, the following should be noted:

- The numbering system established in Code Case N-578-1 is similar to the one used in Code Case N-578. However, the Code Case N-578-1 numbering system is more complete, and more accurately reflects the technical criteria established in EPRI Topical Report No. TR-112657. For these reasons, the numbering system established in Code Case N-578-1 was used instead of the one shown in Code Case N-578, and is carried forward into the Fourth Interval.

- In accordance with ASME Code Case N-524, longitudinal Class 1 piping welds (1989 Code Exam. Cat. B-J Item No. B9.12) do not require examination beyond the length of the welds that are normally examined during inspection of the intersecting circumferential welds. Therefore, there is no need to separately address these welds in the risk-informed application. As such, Class 1 longitudinal piping welds remained with their original ASME Section XI designations. As a result, the RI-ISI application, included in this Fourth Interval Program Plan, concentrates on circumferential Class 1 piping welds. Third Interval Relief Request No. PRR-23 is not required, and is not resubmitted in the 4th Interval. ASME Code Case N-524 will be used, as necessary, for alternative longitudinal weld examination requirements.

1.5.2.1.2 RI-ISI Program Examination of Socket Welds

Per ASME B&PV Code Case N-578-1, the only examination that is required on a socket weld is a VT-2 visual examination each refueling outage. The reason that a surface examination is not required is that if a flaw were to initiate in a socket weld, it is most likely to initiate at the inner root of the weld. A surface examination would not detect this type of flaw until it grows through-wall, at which point a VT-2 is just as likely to detect it. A volumetric examination of the weld would be useful in this situation, but the socket weld configuration usually prevents the performance of meaningful examinations.

In any case, very few socket welds are selected for examination at PNPS since there are simply not that many socket welds in the ISI Program that fall into the medium or high-risk categories. During the 4th ISI Interval, PNPS will perform both VT-2 and PT examinations, at a minimum, of RI-ISI socket welds each refueling outage. PNPS may also elect to perform additional surface and/or volumetric examinations on select socket welds.

1.5.2.1.3 Results of RI-ISI Program Implementation

Existing ASME Section XI Code criteria requires that examinations be performed each interval on 100% of Examination Category B-F (i.e., dissimilar metal) piping welds, and 25% of Examination Category B-J (i.e., similar metal) piping welds in Code Class 1 piping greater than 1" in diameter. ASME Code Case N-578 reduces the number of required examinations to 25% of the high-risk elements, and 10% of the medium risk elements as determined by the risk-informed methodology. Elements can be piping welds or base metal locations, depending on the postulated degradation mechanism. Elements classified as low risk do not require surface or volumetric examinations, but they are still subject to periodic pressure testing as currently required by ASME Section XI.

Application of the RI-ISI Program at PNPS will result in 81 fewer Class 1 welds requiring examination during the interval when compared to existing ASME Section XI examination requirements. In addition, surface examinations have been eliminated on those welds that were selected for examination. The overall risk to the plant is reduced when the RI-ISI Program is applied. This is the case since the risk-informed process concentrates on examining welds that have the greatest risk in terms of consequences of failure and potential degradation. In addition, the RI-ISI examinations are focused on those examination volumes where flaws are most likely to be located, should they exist. As such, the RI-ISI Program does a better job in capturing risk than the existing ASME Section XI requirements, which are based on design stresses and random selection.

Application of the Risk-Informed ISI methodology to Class 1 welds at PNPS represents a favorable alternative to implementing the examination requirements that are currently established in ASME Section XI. Application of RI-ISI substantially reduces the number of weld examinations, which in turn reduces cost, radiation exposure, and possibly outage duration. At the same time, the RI-ISI Program captures an equivalent measure of risk when compared to the existing ASME Section XI criteria.

1.5.2.2 Snubber Inspections and Functional Testing

Under 10CFR50.36(c)(2)(ii), License Amendment No. 195 dated January 14, 2003 relocated Technical Specifications 3/4.6.I, "Shock Suppressors (Snubbers)" and its related Bases to the PNPS FSAR. PNPS FSAR Appendix B contains snubber operability and surveillance requirements for all modes of operation except cold shutdown and refueling. Snubbers are subject to visual inspections, functional testing, and service life monitoring in accordance with FSAR Appendix B.

The snubber inspection and test requirements for the 4th ISI Interval at Pilgrim Station are summarized as follows:

- 100% visual examination of snubbers "pin-to-pin" in accordance with site-specified requirements.
- Functional testing of snubbers in accordance with site-specified requirements.
- Examination of the IWF-5300(c) snubber attachment components in accordance with ASME XI requirements.

This results in the snubber IWF components to be inspected at the same percentage as other support components, for example spring cans or rigid struts. The following are the Class 1, 2 and 3 IWF-5300(c) inspection frequencies:

- Class 1: 25% per 10 year ISI interval (approx. 1/3 per period).
- Class 2: 15% per 10 year ISI interval (approx. 1/3 per period).
- Class 3: 10% per 10 year ISI interval (approx. 1/3 per period).

1.6 Repairs and Replacements

1.6.1 The Section XI Repair / Replacement Program is controlled and implemented by applicable PNPS site procedures (Nuclear Organization Procedure NOP83M1, *ASME Code Repairs And Replacements*) and provides requirements for repairs, modifications, an/or replacements of ISI Class 1, 2, and 3 piping systems and components, as shown on the Section XI ISI P&IDs.

1.6.2 Repairs, replacements and alterations/modifications to ISI Class 1, 2, and 3 components will be made in accordance with ASME Boiler and Pressure Vessel Code Section XI, 1998 Edition, including the 2000 Addenda, Subsection IWA-4000.

1.6.3 Repairs, replacements, and alterations/modifications to ISI Class MC structures and components will be made in accordance with ASME Boiler and Pressure Vessel Code Section XI, 1998 Edition, including the 2000 Addenda, Subsection IWA-4000. Note that Article IWE-4000 (*Repair Procedures*) and Article IWE –7000 (*Replacements*) were deleted in their entirety by the 2000 Addenda.

1.6.4 PNPS Specifications M300 (*Piping*) and M600 (*Piping - ASME Section III Classes 1 and 2*), provide design information applicable to all PNPS plant systems.

1.6.5 ASME Section XI Code Cases for Repair / Replacement activities at PNPS, including the use of Code Case N-600 under Relief Request PRR-7 for the sharing of welder qualifications with other licensees / sites, are within the scope of this Inservice Inspection Plan.

1.6.6 All design changes that affect ISI structures, systems, or components are evaluated by the site ISI Engineer as to the modification's effect on ISI activities and Section XI.

1.7 Administrative Controls

1.7.1 Organizational responsibilities and the methods by which PNPS will conduct inservice inspections and testing shall be proceduralized for compliance with 10CFR50 and ASME Section XI.

1.7.2 The ISI Program Plan is to be maintained in an updated condition. Updates will be completed in a timely manner after each scheduled refueling outage to incorporate outage results.

1.7.3 Entergy shall be responsible for any changes to the plant installed condition due to maintenance, repair or replacement or of any changes in program scope or applicability due to changes in commitments to USNRC.

1.7.4 All items to be examined during a given inspection period are to be scheduled for completion by the end of the applicable period. An Owners Activity Report will be prepared in accordance with applicable plant procedures and submitted to the NRC within 90 days following the refueling outage.

1.7.5 Condition reports shall be initiated in cases where volumetric or surface examinations detect flaws in ISI components which do not meet the applicable Section XI Acceptance Standards.

1.7.6 The scheduling of the IWE General Visual Walkdown shall be coordinated with people responsible for Appendix J testing and shall be performed each inspection period. The General Visual Walkdown shall coincide with the Appendix J containment walkdowns.

1.7.7 PNPS ISI personnel shall obtain the services of a Responsible Engineer to oversee the General Visual Walkdown. PNPS Engineering will provide the person by memo or equivalent.

1.7.8 Guidelines for the planning, scheduling, and performance of ISI examinations during PNPS plant power operations shall be provided by administrative procedures.

1.7.9 Administrative procedures shall provide the overall requirements for outage examination plans and schedules, NDE personnel qualification and certification, development of NDE procedures, examination checklists, and NDE data review.

1.8 ASME Section XI Code Cases

This section discusses the ASME Section XI Code Cases that may be used as alternative requirements to the 1998 Edition of Section XI, 2000 Addenda. The alternative requirements presented are in accordance with ASME Section XI and 10CFR50.55a, as applicable. Appendix A contains a listing of Code Cases for informational purposes.

1.8.1 Adoption of Code Cases

As allowed by 10 CFR 50.55a(c)(3) and USNRC Regulatory Guide 1.147, Revision 13, dated January 2004, certain ASME Section XI Code Cases have been determined acceptable for application to ISI Programs by the USNRC. Other Code Cases not listed as acceptable in Regulatory Guide 1.147 will be used under NRC approved Relief Requests.

PNPS may also apply the ASME Boiler and Pressure Vessel Code Section III Code Cases listed in NRC Regulatory Guide 1.84, Revision 32, without prior NRC approval, subject to limitations contained in 10CFR50.55a(b)(4).

Code Cases adopted for PNPS Inservice Inspection use during the Fourth Interval are listed in the Tables below. In all cases, the use and adoption of Code Cases will be in accordance with ASME Section XI, IWA-2440 and 10 CFR 50.55a. The methodology for adopting Code Cases is divided into the four categories clarified below.

A. *Adoption of Code Cases Listed for Generic Use in Regulatory Guide 1.147 or the Code of Federal Regulations*

Certain ASME Code Cases that are identified as "acceptable" in Regulatory Guide 1.147, Revision 13, or the Code of Federal Regulations 10CFR50.55a, will be adopted for use, as needed, during the Fourth Inservice Inspection Interval. The "acceptable" Code Cases that may be used during the 4th Interval include those listed in Table 1.8-1A:

TABLE 1.8-1A
ACCEPTABLE CODE CASES

CODE CASE NUMBER	TITLE
N-460	*Alternative Examination Coverage for Class 1 and Class 2 Welds, Section XI, Division 1*
N-522	*Pressure Testing of Containment Penetration Piping, Section XI, Division 1*
N-523-2	*Mechanical Clamping Devices for Class 2 and 3 Piping, Section XI, Division 1*
N-524	*Alternative Examination Requirements for Longitudinal Welds in Class 1 and 2 Piping, Section XI, Division 1*
N-526	*Alternative Requirements for Successive Inspections of Class 1 and 2 Vessels, Section XI, Division 1*
N-537	*Location of Ultrasonic Depth-Sizing Flaws, Section XI, Division 1*
N-545	*Alternative Requirements for Conduct of Performance Demonstration Detection Test of Reactor Vessel, Section XI, Division 1*
N-588	*Attenuation to Reference Flaw Orientation of Appendix G for Circumferential Welds in Reactor Vessels, Section XI, Division 1*
N-623	*Deferral of Inspections of Shell-to-Flange and Head-to-Flange Welds of a Reactor Vessel, Section XI, Division 1*
N-624	*Successive Inspections, Section XI, Division 1*
N-629	*Use of Fracture Toughness Test Data to Establish Reference Temperature for Pressure Retaining Materials, Section XI, Division 1*
N-640	*Alternative Reference Fracture Toughness for Development of P-T Limit Curves, Section XI, Division 1*

TABLE 1.8-1A
ACCEPTABLE CODE CASES

CODE CASE NUMBER	TITLE
N-641	*Alternative Pressure-Temperature Relationship and Low Temperature Overpressure Protection System Requirements, Section XI, Division1*

For "conditionally acceptable" Section XI Code Cases, all conditions or limitations delineated in Regulatory Guide 1.147 or in the Code of Federal Regulations that are applicable for the particular Code Case shall apply. In either case, a Relief Request to use the Code Case is not required.

The "conditionally acceptable" Code Cases that may be used during the 4th Interval include those in Table 1.8-1B:

TABLE 1.8-1B
CONDITIONALLY ACCEPTABLE CODE CASES

CODE CASE NUMBER	TITLE	CONDITION(S)
N-416-2	*Alternative Pressure Test Requirement for Welded Repairs or Installation of Replacement Items by Welding, Class 1, 2, and 3, Section XI, Division 1*	The provisions of IWA-5213, "Test Condition Holding Times," 1989 Edition, are to be used.
N-498-4	*Alternative Requirements for 10-Year System Hydrostatic Testing for Class 1, 2 and 3 Systems, Section XI, Division 1*	The provisions of IWA-5213, "Test Condition Holding Times," 1989 Edition, are to be used.
N-513	*Evaluation Criteria for Temporary Acceptance of Flaws in Class 3 Piping, Section XI, Division 1*	(1) Specific safety factors in paragraph 4.0 must be satisfied. (2) Code Case N-513 may not be applied to: (a) Components other than pipe and tube. (b) Leakage through a gasket. (c) Threaded connections employing nonstructural seal welds for leakage prevention (through seal weld leakage is not a structural flaw; thread integrity must be maintained). (d) Degraded socket welds.
N-532-1	*Alternative Requirements to Repair and Replacement Documentation Requirements and Inservice Summary Report Preparation and Submission as Required by IWA-4000 and IWA-6000, Section XI, Division 1*	Code Case N-532-1 requires an Owner's Activity Report Form OAR-1 to be prepared and certified upon completion of each refueling outage. The OAR-1 forms must be submitted to the NRC within 90 days of the completion of the refueling outage.
N-533-1	*Alternative Requirements for VT-2 Visual Examination of Class 1, 2, and 3 Insulated Pressure-Retaining Bolted Connections, Section XI, Division 1*	Prior to conducting the VT-2 examination, the provisions of IWA-5213, "Test Condition Holding Times," 1989 Edition, are to be followed.

TABLE 1.8-1B
CONDITIONALLY ACCEPTABLE CODE CASES

CODE CASE NUMBER	TITLE	CONDITION(S)
N-546	*Alternative Requirements for Qualification of VT-2 Examination Personnel, Section XI, Division 1*	(1) Qualify examination personnel by test to demonstrate knowledge of Section XI and plant specific procedures for VT-2 visual examination. (2) Requalify examination personnel by examination every three years. (3) This code case is applicable only to the performance of VT-2 examinations and may not be applied to other VT-2 functions such as verifying the adequacy of procedures and training VT-2 personnel.
N-552	*Alternative Methods - Qualification for Nozzle Inside Radius Section from the Outside Surface, Section XI, Division 1*	To achieve consistency with the 10 CFR 50.55a rule change published September 22, 1999 (64 FR 51370), incorporating Appendix VIII, "Performance Demonstration for Ultrasonic Examination Systems," to Section XI, add the following to the specimen requirements: "At least 50 percent of the flaws in the demonstration test set must be cracks and the maximum misorientation must be demonstrated with cracks. Flaws in nozzles with bore diameters equal to or less than 4 inches may be notches. Add to detection criteria, "The number of false calls must not exceed three."
N-583	*Annual Training Alternative, Section XI, Division 1*	(1) Supplemental practice shall be performed on material or welds that contain cracks, or by analyzing prerecorded data from material or welds that contain cracks. (2) The training must be completed no earlier than 6 months prior to performing ultrasonic examinations at a licensee's facility.
N-597-1	*Requirements for Analytical Evaluation of Pipe Wall Thinning, Section XI, Division 1*	(1) Code Case must be supplemented by the provisions of EPRI Nuclear Safety Analysis Center Report 202L-R2, April 1999, "Recommendations for an Effective Flow Accelerated Corrosion Program," for developing the inspection requirements, the method of predicting the rate of wall thickness loss, and the value of the predicted remaining wall thickness. As used in NSAC-202L-R2, the terms "should" and "shall" have the same expectation of being

TABLE 1.8-1B
CONDITIONALLY ACCEPTABLE CODE CASES

CODE CASE NUMBER	TITLE	CONDITION(S)
		completed. (2) Components affected by flow-accelerated corrosion to which this Code Case are applied must be repaired or replaced in accordance with the construction code of record and Owner's requirements or a later NRC approved edition of Section III of the ASME Code prior to the value of t_p reaching the allowable minimum wall thickness, t_{min}, as specified in -3622.1(a)(1) of this Code Case. Alternatively, use of the Code Case is subject to NRC review and approval. (3) For Class 1 piping not meeting the criteria of -3221, the use of evaluation methods and criteria is subject to NRC review and approval. (4) For those components that do not require immediate repair or replacement, the rate of wall thickness loss is to be used to determine a suitable inspection frequency so that repair or replacement occurs prior to reaching allowable minimum wall thickness, t_{min}. (5) For corrosion phenomenon other than flow accelerated corrosion, use of the Code Case is subject to NRC review and approval. Inspection plans and wall thinning rates may be difficult to justify for certain degradation mechanisms such as MIC and pitting.
N-639	*Alternative Calibration Block Material, Section XI, Division 1*	Chemical ranges of the calibration block may vary from the materials specification if: (1) the calibration block material is produced under an accepted industry specification or standard, and (2) the phase and grain shape are maintained in the same ranges produced by the thermal process required by the material specification.

TABLE 1.8-1B
CONDITIONALLY ACCEPTABLE CODE CASES

CODE CASE NUMBER	TITLE	CONDITION(S)
N-648-1	*Alternative Requirements for Inner Radius Examination of Class 1 Reactor Vessel Nozzles, Section XI Division 1*	In place of a UT examination, licensees may perform a visual examination with enhanced magnification that has a resolution sensitivity to detect a 1-mil width wire or crack, utilizing the allowable flaw length criteria of Table IWB-3512-1 with limiting assumptions on the flaw aspect ratio. The provisions of Table IWB-2500-1, Examination Category B-D, continue to apply except that, in place of examination volumes, the surfaces to be examined are the external surfaces shown in the figures applicable to this table.

Other Code Cases as they are listed in future revisions of Regulatory Guide 1.147, may be used, if and when required, without the submittal of a formal Relief Request.

B. *Adoption of Code Cases Not Listed for Generic Use in Regulatory Guide 1.147*

Adoption of Code Cases that have been approved by the ASME Board of Nuclear Codes and Standards, but that have not been listed for generic use in Regulatory Guide 1.147, may be submitted for approval for use to the NRC in the form of a Relief Request in accordance with 10 CFR 50.55a(a)(3). Once approved, these Relief Requests will be available for use at PNPS until such time that the Code Cases are adopted into Regulatory Guide 1.147, at which time PNPS will comply with any additional limitations stated therein.

Table 1.8-1C below lists those Code Cases for which relief at PNPS has been sought from the USNRC.

Relief Requests for Code Cases N-416-1 and N-498-1 were approved by the NRC in a letter entitled, "Request to Use ASME Boiler and Pressure Vessel Code Cases N-416-1 and N-498-1 at Pilgrim Nuclear Power Station (TAC No. M91513)", dated March 10, 1995. As stipulated in this letter, for the application of Code Case N-416-1 criteria, PNPS will perform additional surface examinations on the root pass of butt and socket welds on the pressure-retaining boundary of Class 3 components when the surface examination method is used in accordance with ASME Section III.

On May 2, 2001, the NRC issued an SER approving the implementation of a risk-informed application on Class 1 piping welds at PNPS. The methodology used in the RI-ISI application was in accordance with EPRI Topical Report No. TR-112657. However, this methodology is also considered to be consistent with the criteria presented in ASME Code Case N-578 / N-578-1. As such, Code Case N-578-1 has been included in Table 1.8-1C for reference purposes.

TABLE 1.8-1C
CODE CASES TO BE USED AT PNPS THROUGH RELIEF REQUESTS

CODE CASE NUMBER	TITLE	RELIEF REQUEST NUMBER
N-504-2	*Alternative Rules for Repair of Class 1, 2, and 3 Austenitic Stainless Steel Piping, Section XI, Division 1*	PRR-15 PRR-39
N-578-1	*Risk-Informed Requirements for Class 1, 2, and 3 Piping, Method B, Section XI, Division 1*	PRR-10
N-600	*Transfer of Welder, Welding Operator, Brazer, and Brazing Operator Qualifications Between Owners, Section XI, Division 1*	PRR-7
N-613-1	*Ultrasonic Examination of Full Penetration Nozzles in Vessels, Examination Category B-D, Item No's. B3.10 and B3.90, Reactor Nozzle-To-Vessel Welds, Figs. IWB-2500-7(a), (b), and (c), Section XI, Division 1*	PRR-13
N-638	*Similar and Dissimilar Metal Welding Using Ambient Temperature Machine GTAW Temper Bead Technique, Section XI, Division 1*	PRR-15 PRR-39
N-652	*Alternative Requirements to Categories B-G-1, B-G-2, and C-D Bolting Examination Methods and Selection Criteria, Section XI, Division 1*	PRR-14
N-663	*Alternative Requirements for Class 1 and 2 Surface Examinations, Section XI, Division 1*	PRR-8

C. *Adoption of Code Cases Listed for Generic Use in Regulatory Guide 1.147 But Subsequently Annulled by ASME Section XI*

Under certain circumstances, it may be necessary to adopt a Code Case that has been listed for generic use in Regulatory Guide 1.147, but subsequently annulled by ASME Section XI. Therefore, PNPS endorses all revisions of Regulatory Guide 1.147 up to, and including, the most recent revision. Endorsement of these revisions of Regulatory Guide 1.147 does not commit Pilgrim Station to all Code Cases listed therein, but rather allows for selection of a previously accepted Code Case. The purpose of this endorsement is to identify all Code Cases that could potentially be incorporated into the Inservice Inspection Plan in accordance with IWA-2441. Code Cases that have been annulled by ASME and included in Table 3 of Regulatory Guide 1.147, Revision 13, will not be used in the PNPS 4th ISI Interval without the submittal of relief request.

D. *Adoption of Code Cases Issued Subsequent to Filing this Inservice Inspection Plan*

Code Cases issued by ASME Section XI subsequent to the official filing of this Inservice Inspection Plan may be proposed for use through amendments to this Plan in accordance with ASME Section XI, IWA-2441(d).

1.9 Relief Requests

Relief requests for inservice inspection activities are addressed under 10CFR50.55a(g)(5)(iv). In certain cases, strict compliance with the ASME Boiler and Pressure Vessel Code Section XI - 1998 Edition, 2000 Addenda, have been determined to be impractical for the Pilgrim Nuclear

Power Station. As stated in 10CFR50.55a(g)(5)(iii): "*If the licensee has determined that conformance with certain code requirements is impractical for its facility, the licensee shall notify the Commission and submit, as specified in § 50.4, information to support the determinations.*"

This Inservice Inspection Program has been developed from an engineering review of PNPS systems, components and supports. When examinations cannot be performed to the requirements of the ASME Section XI Code, as allowed by provisions in 10CFR50.55a, request for relief with justifications and applicable proposed alternatives will be submitted for NRC approval. Approved changes shall be incorporated into the next revision of the Inservice Inspection Program Plan.

Relief requested from the examination requirements of ASME Boiler and Pressure Vessel Code Section XI 1998 Edition, 2000 Addenda, for ISI Class 1, Class 2, Class 3, and Class MC components, piping and supports are listed in Appendix B. Relief from the examination requirements was requested based upon the justification and alternative examination methods provided. Relief from other ISI related programs that are not controlled by this Plan are not included in Appendix B.

Fourth Interval Relief Requests are numbered subsequently and are given the designation of "*PRR-x*" ("*Pilgrim Relief Request Number x*"). Copies of these Relief Requests are included in Appendix B.

1.9.1 10CFR50.55a(g)(4)(iv) Requests for Use of Subsequent Code Editions and Addenda

Appendix D provides the 10CFR50.55a(g)(4)(iv) requests related to the use of subsequent editions and addenda of Section XI for inservice inspections at PNPS during the Fourth Ten-Year Interval.

1.10 Non-Destructive Examination (NDE)

Examination methods are employed as per IWA-2200. The three types used during the ISI examinations are: Visual, Surface, and Volumetric.

Visual (IWA-2210): Visual examinations shall be conducted in accordance with Table IWA-2210-1 of Section V, Article 9 and IWA-2210.

- VT-1 (General Condition) as per IWA-2211 & Section XI Mandatory Appendix VI.
- VT-2 (Evidence of Leakage) as per IWA-2212, IWA-5000, & Section XI Mandatory Appendix VI.
- VT-3 (Mechanical & Structural Condition) as per IWA-2213 & Section XI Mandatory Appendix VI.

Surface (IWA-2220): Magnetic Particle as per Section V, Article 7 and Section V, Article 7, Appendix I.

Liquid Penetrant as per Section V, Article 6.

Eddy Current as per Section XI Mandatory Appendix IV.

Volumetric (IWA-2230): Ultrasonic as per Section XI Mandatory Appendices I, III, VII, & VIII.

Eddy Current as per Section V, Article 8, Appendix II.

Radiography as per ASME Section V, Article 2.

1.10.1 Ultrasonic Examinations

Ultrasonic examination of components at PNPS will be performed in accordance with the requirements of ASME Section XI Mandatory Appendix I.

- The detailed requirements for the UT examination of vessels with thicknesses less than or equal to two inches are contained in Appendix III, as supplemented by Table I-2000-1.
- The detailed requirements for UT examinations of vessels with thicknesses greater than two inches, other than the reactor vessel, are contained in ASME Section V, Article 4.
- The detailed requirements for the ultrasonic examination of piping welds and for bolts and studs are contained in ASME Section XI, Mandatory Appendix VIII.
- The detailed requirements for UT examinations of the PNPS reactor vessel (thicknesses greater than two inches) are contained in ASME Section XI Mandatory Appendixes III & VIII, and Article 4 of Section V, as applicable, as supplemented by Section XI Appendix I Table I-2000-1. Per PRR-11, it is proposed to use a Performance Demonstration Initiative (PDI) qualified procedure to complete the UT of the RPV vessel-to-flange weld in accordance with Section XI Appendix VIII Supplements 4 and 6 as amended by the Federal Register Notice 67FR187, dated September 26, 2002, in lieu of using Article 4 of Section V supplemented by Table I-2000-1.

10CFR50.55a(b)(2)(xiv, xv, & xvi) provides requirements for the implementation of Mandatory Appendix VIII, *Performance Demonstration for Ultrasonic Examination Systems*, of ASME Section XI 1998 Edition, 2000 Addenda. Appendix VIII provides requirements for performance demonstration for ultrasonic examination procedures, equipment, and personnel used to detect and size flaws.

Per Relief Request PRR-9, during the Fourth Inspection Interval PNPS proposes use of the Performance Demonstration Initiative (PDI) Program for implementation of Mandatory Appendix VIII, Supplement 11 ("*Qualification Requirements For Full Structural Overlaid Wrought Austenitic Piping Welds*").

10CFR50.55a(b)(2)(xiv) requires that all personnel qualified for performing ultrasonic examinations in accordance with Appendix VIII receive 8 hours of annual hands-on training on specimens that contain cracks. As permitted by this regulation, Entergy Nuclear Northeast may use the annual practice requirements in VII-4240 of Appendix VII of Section XI in place of the 8 hours of annual hands-on training provided that the supplemental practice is performed on material or welds that contain cracks, or by analyzing prerecorded data from material or welds

that contain cracks. In either case, the required training will be completed no earlier than 6 months prior to performing ultrasonic examinations at PNPS.

1.10.2 NDE Personnel Qualifications

1.10.2.1 Nondestructive examination personnel shall receive training and be qualified in accordance with ASME Section XI, Subarticle IWA-2300. Ultrasonic examination personnel shall additionally meet the training, qualification, and certification requirements of ASME Section XI Mandatory Appendices VII and VIII.

1.10.2.2 Per 10CFR50.55a(b)(2)(xviii)(A), Level I and II nondestructive examination personnel shall be recertified on a 3-year interval in lieu of the 5-year interval specified in IWA-2314 of the 1998 Edition, 2000 Addenda ("*Certification and Recertification*").

1.10.2.3 Procedure ENN-NDE-2.10, "*Certification of NDE Personnel*" establishes the requirements for the training, qualification, examination and certification of Section XI Radiographic Examination (RT), Magnetic Particle Examination (MT), Liquid Penetrant Examination (LP), Electromagnetic Testing (ET), and Leak Testing (LT) personnel.

1.10.2.4 Procedure ENN-NDE-2.12, "*Certification of Visual Testing (VT) Personnel*" establishes the requirements for the training, qualification, examination and certification of Section XI VT-1, VT-2, and VT-3 Visual Examination personnel.

- Per 10CFR50.55a(b)(2)(xviii)(B), Paragraph IWA-2316 of the 1998 Edition, 2000 Addenda ("*Alternative Qualifications of VT-2 Visual Examination Personnel*") may be used to qualify personnel that observe for leakage during system leakage and hydrostatic tests conducted in accordance with IWA-5211(a) and (b).

- As required by 10CFR50.55a(b)(2)(xviii)(C), when qualifying visual examination personnel for VT-3 visual examinations under paragraph IWA-2317 of the 1998 Edition, 2000 Addenda ("*Alternative Qualifications of VT-3 Visual Examination Personnel*"), the proficiency of the training will be demonstrated by administering an initial qualification examination and administering subsequent examinations on a 3-year interval.

1.10.2.5 Procedure ENN-NDE-2.11, "*Qualification and Certification of ASME Section XI, Appendix VII, Ultrasonic Examination Personnel*" establishes the requirements for the training, qualification, examination and certification of ASME Section XI Ultrasonic Nondestructive Examination (NDE) personnel in accordance with ANSI/ASNT CP-189 as modified by ASME Section XI IWA-2300 and Appendix VII.

1.10.3 NDE Inspection Procedures

1.10.3.1 The NDE examination procedures employed during the 4th Interval will meet all the requirements of the ASME Code Section XI, 1998 Edition, including the 2000 Addenda. All procedures will be reviewed and approved prior to use by Entergy in accordance with the Entergy's 10CFR50 Appendix B QA Program. The procedures

will be referenced on the appropriate NDE data sheets and are available for review at any time by regulatory personnel at the plant site.

1.10.3.2 PNPS Procedure NE15.10, "*Visual Examination of IWE Components*" provides the controls for the three types of visual examinations required by ASME XI Subsection IWE for Class MC (Metal Containment) components, as well as providing the recording and reporting criteria to be used for these visual examinations.

1.10.3.3 PNPS Procedure No. 2.1.8.7, "*ASME Code Visual Examination of Primary Containment*" provides the method for performing the General Visual Examination of Primary Containment pressure-retaining surfaces in accordance with the requirements of 10CFR50.55a(b)(2) and Subsection IWE.

1.11 ASME Section XI System Pressure Testing

1.11.1 System Pressure Testing for Repair/Replacement Activities

1.11.1.1 Class 1, 2, and 3 (IWA-4540)

In accordance with the requirements of IWA-4540, unless specifically exempted as listed below, repair/replacement activities performed on Class 1, 2, and 3 items by welding or brazing on a pressure-retaining boundary shall include either (1) or (2) as follows:

(1) A system hydrostatic test shall be performed in accordance with IWA-5000 prior to, or as part of, returning to service, or

(2) The following requirements shall be met:

(a) The nondestructive examination methodology and acceptance criteria of the 1992 Edition or later of Section III shall be met prior to return to service.
(b) The Owner's Requirements shall be met prior to return to service.
(c) A system leakage test shall be performed in accordance with IWA-5000.

The following Class 1, 2, and 3 items are exempt from any pressure test:

- cladding;
- heat exchanger tube plugging and sleeving;
- piping, pump, and valve welding or brazing that does not penetrate through the pressure boundary;
- flange seating surface when less than half the flange axial thickness is removed and replaced ;
- pressure vessel welding when the remaining wall thickness, after metal removal, is at least 90% of the minimum design wall thickness;
- components or connections NPS 1" and smaller;
- tube-to-tubesheet welds when such welds are made on the cladding;
- seal welds;
- welded joints between non-pressure-retaining items and the pressure-retaining portion of the components;
- valve discs or seats.

1.11.1.2 Class MC (IWA-4550)

Pressure testing following repair/replacement activities performed on Class MC items will be in accordance with IWE-5000.

1.11.2 **Periodic System Pressure Testing**

1.11.2.1 General

Periodic system pressure tests are performed by plant procedures in accordance with the requirements of Article IWA-5000 for the following components:

- Class 1 Pressure Retaining Components (Examination Category B-P)
- Class 2 Pressure Retaining Components (Examination Category C-H)
- Class 3 Pressure Retaining Components (Examination Category D-B)

The requirements of IWA-5000 are not applicable to Class MC components, except for repair/replacement activities. Article IWA-5000 System Pressure Tests are also not applicable to Subsection IWF component supports.

Test boundaries will be determined in accordance with IWA-5220.

The required visual examinations (VT-2) will be performed by personnel qualified and certified in accordance with Subarticle IWA-2300. Guidance for the PNPS ISI Inspectors when performing VT-2 visual inspections for leakage during the Class 1, Class 2, and 3 system pressure tests is provided by PNPS Procedure No. 2.1.8.3, "*Visual Examination for Leakage During System Pressure Testing*".

Tests will be documented by plant procedures and made available to an ANII inspector and a Plant NDE Level III inspector for review.

1.11.2.2 System Leakage Testing

In accordance with 10CFR50.55a(b)(2)(xx) "*System Leakage Tests*", when performing system leakage tests per IWA-5213(a), 2000 Addenda, a 10-minute hold time after attaining test pressure is required for Class 2 and Class 3 components that are not in use during normal operating conditions, and no hold time is required for the remaining Class 2 and Class 3 components provided that the system has been in operation for at least 4 hours for insulated components or 10 minutes for uninsulated components.

Class 1 System Leakage Testing shall be performed after every reactor refueling outage has been completed prior to plant startup.

Class 2 and Class 3 System Leakage Testing shall be performed once each Inspection Period.

The leakage observations shall be made by qualified VT-2 examiners. VT-2 Visual Examination Reports shall be generated and reviewed by site personnel in

accordance with site procedures. Such reports are available for review by regulatory personnel.

1.11.2.3 Hydrostatic Testing

Class 1 (IWB) and Class 2 (IWC) components do not require hydrostatic testing under Examination Categories B-P and C-H, respectively.

Class 3 (IWD) components under the 1998 Code, 2000 Addenda, require 10 Yr. System Hydrostatic Tests (Exam. Cat. D-B, Item No. D2.20) to be conducted at or near the end of the Inspection Interval or during the same Inspection Period as the Third Interval. These System Hydrostatic Tests may be conducted while the plant is either in operation or shutdown. However, per 10CFR50.55a Request Number PIL-05-R-003 included within Appendix D, the 2001 Edition, through the 2003 Addenda will be used in place of the 1998 Edition, 2000 Addenda. Class 3 system hydrostatic test requirements have been deleted in their entirety from the 2001 Edition, 2003 Addenda.

1.12 Calibration Blocks

1.12.1 Calibration blocks shall meet the material, surface finish and calibration reflector configuration requirements in effect at the time of the calibration block fabrication. Where this differs from the current edition of ASME Section XI, the differences shall be noted in the UT examination procedure.

1.12.2 Calibration blocks shall be used to establish a reference sensitivity level from which subsequent examinations may be compared. The calibration block design may be the Basic Calibration Block described in Section XI Appendix III (i.e., III-3400) or the design may be the Alternative Calibration Block described in ENN NDE procedures. During Section XI Appendix VIII performance demonstration for ultrasonic examinations, alternate calibration blocks may be used.

1.12.3 A detailed list of all ISI calibration blocks to be employed during the Fourth Interval is provided in Appendix C of this Program Plan. Per PDI procedures, calibration blocks fabricated to an edition of Section XI earlier than the 1998 Edition with 2000 Addenda may be used in the 4th Interval without reconciliation.

SECTION 2.0

ISI SYSTEM / COMPONENT EXEMPTIONS & EXAMINATION DEVELOPMENT

2.0 ISI SYSTEM / COMPONENT EXEMPTIONS & EXAMINATION DEVELOPMENT

2.1 CLASS 1 SYSTEMS / COMPONENTS (IWB)

The ASME Code Class 1 system boundaries subject to examination and testing were developed based upon the requirements of 10 CFR 50.2(v) and the PNPS Final Safety Analysis Report (FSAR). The ASME Code Class 1 pressure retaining components and their welded attachments subject to examination and inspection are described below.

2.1.1 Components Subject to Examination (IWB-1210)

Components subject to examination are all Class 1 pressure retaining components and their welded attachments.

2.1.2 Components Exempt from Examination (IWB-1220)

The following components (or parts of components) are exempted from the volumetric and surface examination requirements of IWB-2500:

(a) Components that are connected to the Reactor Coolant System and part of the reactor coolant pressure boundary and that are of such a size and shape so that upon postulated rupture the resulting flow of coolant from the Reactor Coolant System, under normal plant operating conditions, is within the capacity of makeup systems that are operable from on-site emergency power. The emergency core cooling systems are excluded from the calculation of makeup capacity.

(b) (1) Piping of 1" nominal pipe size and smaller;
(2) Components and their connections in piping of 1" nominal pipe size and smaller.

(c) Reactor vessel head connections and associated piping, 2" nominal pipe size and smaller, made inaccessible by control rod drive penetrations.

(d) Welds, or portions of welds, that are inaccessible due to being encased in concrete, buried underground, located inside a penetration, or encapsulated by guard pipe.

In addition to the above exemptions, in accordance with ASME Section XI, Paragraph IWB-1220(a) and 10 CFR 50.55a, piping may be exempted from the volumetric and surface examinations of ASME Section XI, provided they are connected to the reactor coolant pressure boundary, and are of such size and shape that upon a postulated rupture, the resulting flow of coolant under normal operating conditions is within the make-up capacity of the plant. As allowed by Section XI, IWB-1220(a), a calculation was performed in 1983 to justify the exclusion of water and steam lines from ISI Class 1 surface and volumetric examination based on normal system makeup (ref. BECo Memorandum No. NED 90-300 and NUTECH Letter No. BOS-06-011). Liquid lines were defined as those that penetrate the reactor pressure vessel (RPV) below the normal water level and steam lines were defined as those that penetrate the RPV above the normal water level. As was documented in this calculation, Class 1 piping in water systems with an inside diameter of 1.10" or less, and piping in steam systems with an inside diameter of 2.20" or less qualify for the make-up capacity exemption of IWB-1220(a).

2.1.3 IWB Component / Piping Examination Development

Class 1 components subject to examination are identified in Section 4.0. A summary discussion of Class 1 components subject to examination and inspection is described below:

2.1.3.1 Examination Category B-A, Pressure Retaining Welds in Reactor Vessel

Note: Relief Request PRR-6 has been submitted to use RMS for grading purposes as an alternative to Appendix VIII, Supplement 4 for the examination of RPV Shell and Head Welds (Item Nos. B1.11, B1.12, B1.21, and B1.22).

- **Item No. B1.11: Shell Welds – Circumferential**
- **Item No. B1.12: Shell Welds – Longitudinal**

The following applies to both B1.11 and B1.12:

- Examination Requirements / Fig. No.: IWB-2500-1 (Shell Welds - Circumferential). IWB-2500-2 (Shell Welds - Longitudinal).
- Examination Method: Volumetric.
- Acceptance Standard: IWB-3510.
- Extent and Frequency of Examination: All welds during the 4th Interval. Includes essentially 100% of the weld length. Under 3rd Interval Relief Request PRR-28 (see Appendix B), all accessible RPV longitudinal (axial) welds will be examined to the extent possible. If less than 90% coverage is achieved, PNPS shall request additional relief during the 4th Interval. In addition, essentially 1% to 3% of the incidental circumferential welds were examined during the 3rd Interval. The USNRC granted approval of PRR-28 in the 3rd ISI Interval and it applies until the expiration of the initial Operating License in 2012.
- Deferral: Deferral of examinations to end of interval is permissible.

- **Item No. B1.21: Head Welds - Circumferential**
- **Item No. B1.22: Head Welds – Meridional**

The following applies to both B1.21 and B1.22:

- Examination Requirements / Fig. No.: IWB-2500-3.
- Examination Method: Volumetric.
- Acceptance Standard: IWB-3510.
- Extent and Frequency of Examination: Accessible length of all welds during the interval. Includes essentially 100% of the weld length.
- Deferral: Deferral of examinations to end of interval is permissible.

- **Item No. B1.30: Shell-to Flange Weld**

- Examination Requirements / Fig. No.: IWB-2500-4.
- Examination Method: Volumetric. Relief Request PRR-11 requests a Performance Demonstration Initiative (PDI) qualified procedure to be used to complete the UT of the RPV shell-to-flange weld in accordance with

Mandatory Appendix VIII Supplements 4 and 6 as amended by the Federal Register Notice 67FR187, dated September 26, 2002, in lieu of Article 4 of ASME Section V as supplemented by Table I-2000-1.

- Acceptance Standard: IWB-3510.
- Extent and Frequency of Examination: Weld. Includes essentially 100% of the weld length.
- Deferral: Per Table IWB-2500-1, when using Inspection Program B, the shell-to-flange weld examination may be performed during the first and third periods, in which case 50% of the shell-to-flange weld shall be examined by the end of the first period, and the remainder by the end of third period. During the first period, the examination need only be performed from the flange face, provided this same portion is examined from the shell during the third period. Relief Request PRR-12 requests the code required volumetric examinations on the entire shell-to-flange weld be deferred to no later than the Third Period of the Fourth Inspection Interval. The examinations are to be performed instead in conjunction with the RPV10-year ISI.

- **Item No. B1.40: Head-to-Flange Weld**

  - Examination Requirements / Fig. No.: IWB-2500-5.
  - Examination Method: Volumetric and surface.
  - Acceptance Standard: IWB-3510.
  - Extent and Frequency of Examination: Weld. Includes essentially 100% of the weld length.
  - Deferral: Deferral is not permissible for the head-to-flange weld. However, during the first and second periods, the examination need only be performed from the flange face, provided these same portions are examined from the head during the third period (per Table IWB-2500-1).

- **Item No. B1.51: Repair Welds – Beltline Region**

  Note: PNPS does not have any RPV beltline region repair welds. The code requirements below are provided for informational purposes.

  - Examination Requirements / Fig. No.: IWB-2500-1 and -2.
  - Examination Method: Volumetric.
  - Acceptance Standard: IWB-3510.
  - Extent and Frequency of Examination: All weld repair areas during the interval. Material (base metal) weld repairs where repair depth exceeds 10% nominal of the vessel wall. If the location of the repair is not positively and accurately known, then the individual shell plate, forging, or shell course containing the repair shall be included.
  - Deferral: Deferral of examinations to end of interval is permissible.

2.1.3.2 Examination Category B-B, Pressure Retaining Welds In Vessels Other Than Reactor Vessels

Note: All Examination Category B-B Item Numbers below do not apply to the PNPS plant (BWR) design. No examinations are required.

- **Item No. B2.11: Pressurizer Shell-to-Head – Circumferential Weld**
- **Item No. B2.12: Pressurizer Shell-to-Head – Longitudinal Weld**
- **Item No. B2.21: Pressurizer Head Welds – Circumferential**
- **Item No. B2.22: Pressurizer Head Welds – Meridional**
- **Item No. B2.31: Steam Generators (Primary Side) – Head Welds – Circumferential**
- **Item No. B2.32: Steam Generators (Primary Side) – Head Welds – Meridional**
- **Item No. B2.40: Steam Generators (Primary Side) – Tubesheet-to-Head Weld**
- **Item No. B2.51: Heat Exchangers (Primary Side) – Head – Head Welds – Circumferential**
- **Item No. B2.52: Heat Exchangers (Primary Side) – Head – Head Welds – Meridional**
- **Item No. B2.60: Heat Exchangers (Primary Side) – Shell – Tubesheet-to-Head Welds**
- **Item No. B2.70: Heat Exchangers (Primary Side) – Shell – Longitudinal Welds**
- **Item No. B2.80: Heat Exchangers (Primary Side) – Shell – Tubesheet-to-Shell Welds**

2.1.3.3 Category B-D, Full Penetration Welded Nozzles in Vessels – Inspection Program B

Note: Entergy may elect to utilize conditionally acceptable ASME Code Case N-552 *Alternative Methods - Qualification for Nozzle Inside Radius Section from the Outside Surface, Section XI, Division 1* for the qualification of methods for examination of the nozzle inside radius section from the outside surface, subject to any conditions stated in USNRC Reg. Guide 1.147.

- **Item No. B3.90: Reactor Vessel – Nozzle-to-Vessel Welds**
- **Item No. B3.100: Reactor Vessel – Nozzle Inside Radius Section**

  - Examination Requirements / Fig. No.: IWB-2500-7. The examination volumes shall apply to the applicable Figure shown in Figs. IWB-2500-7(a) through (d). Per Relief Request PRR-13, Entergy proposes use of Code Case N-613-1 for the nozzle-to-vessel shell welds examination volume. The IWB-2500-7(a) through (d) required examination volume of the nozzle-to-vessel welds is unnecessarily large. The alternative to use Code Case N-613-1 will not affect the flaw detection capabilities in the weld and the heat affected zone, and provides an adequate level of quality and safety for examination of the affected welds.
  - Examination Method: Volumetric. In place of a UT examination, Code Case N-648-1 may be applied to perform a visual examination with enhanced magnification that has a resolution sensitivity to detect a 1-mil width wire or crack, utilizing the allowable flaw length criteria of Table IWB-3512-1 with limiting assumptions on the flaw aspect ratio. The provisions of Table IWB-2500-1, Examination Category B-D, continue to apply except that, in place of examination volumes, the surfaces to be examined are the external surfaces shown in the figures applicable to the table (Reg. Guide 1.147 Rev. 13).
  - Acceptance Standard: IWB-3512.

- Extent and Frequency of Examination: All nozzles during the interval. Includes nozzles with full penetration welds to vessel shell (or head) and integrally cast nozzles, but excludes manways and handholes either welded to or integrally cast in vessel.
- Deferral: During the fourth interval at least 25% but not more than 50% of the nozzles shall be examined by the end of the second period, and the remainder by the end of the interval. If the nozzle-to-vessel weld is examined by the straight beam ultrasonic method from inside the nozzle bore, the remaining examinations required from the shell inside diameter may be performed at or near the end of the interval.

Note: Item numbers B3.110 through B3.160 below do not apply to the PNPS plant (BWR) design. No examinations are required.

- ☐ **Item No. B3.110: Pressurizer – Nozzle-to-Vessel Welds**
- ☐ **Item No. B3.120: Pressurizer – Nozzle Inner Radius Section**

- ☐ **Item No. B3.130: Steam Generators (Primary Side) – Nozzle-to-Vessel Welds**
- ☐ **Item No. B3.140: Steam Generators (Primary Side) – Nozzle Inner Radius Section**

- ☐ **Item No. B3.150: Heat Exchangers (Primary Side) – Nozzle-to-Vessel Welds**
- ☐ **Item No. B3.160: Heat Exchangers (Primary Side) – Nozzle Inner Radius Section**

2.1.3.4 Examination Category B-F, Pressure Retaining Dissimilar Metal Welds in Vessel Nozzles

Notes:

(1) The Risk-Informed Inservice Inspection (RI-ISI) application on Class 1 piping welds was first incorporated into the Third Ten-Year Interval Inservice Inspection Plan. As part of this application, Examination Category B-F Class 1 circumferential piping welds were assigned alternate Examination Category and Code Item Numbers that are consistent with ASME Section XI Code Case N-578-1. The alternate Examination Category and Code Item Numbers are discussed in Section 2.6 of this ISI Program Plan. For the Fourth Ten-Year Interval, use of the RI-ISI application on Class 1 Examination Category B-F piping welds is proposed under Relief Request PRR-10.

(2) RI-ISI Examination Category R-A Item No. R16 welds classified as Categories "B" through "G" per USNRC Generic Letter 88-01 are examined in accordance with the PNPS IGSCC Program. See Section 1.5.1.6 of this ISI Program Plan for further information.

(3) Under Relief Request PRR-5, in lieu of the requirements of ASME Section XI, 1998 Edition, 2000 Addenda, Appendix VIII, Supplement 10, the proposed alternatives described in PRR-5 in Appendix B will be used and will be implemented through the PDI Program.

(4) See Table 3.1-6 (Examination Category R-A) for period scheduling. The Examination Category B-F weld counts in Table 3.1-1 are maintained for historical reference purposes only.

(5) See PRR-15 and PRR-39 in Appendix B for full structural weld overlay contingency repairs for the weldments associated with austenitic RPV nozzle safe-end (B5.10) and dissimilar metal (DM) piping welds.

- ☐ **Item No. B5.10: Reactor Vessel – NPS 4 or Larger Nozzle-to-Safe End Butt Welds**
- ☐ **Item No. B5.20: Reactor Vessel – Less Than NPS 4 Nozzle-to-Safe End Butt Welds**
- ☐ **Item No. B5.30: Reactor Vessel – Nozzle-to-Safe End Socket Welds**

  - Examination Requirements / Fig. No.: See Sections 1.5.1.6 and 2.6 of this ISI Program Plan.
  - Examination Method: See Sections 1.5.1.6 and 2.6 of this ISI Program Plan.
  - Acceptance Standard: See Sections 1.5.1.6 and 2.6 of this ISI Program Plan.
  - Extent and Frequency of Examination: See Sections 1.5.1.6 and 2.6 of this ISI Program Plan.
  - Deferral: See Sections 1.5.1.6 and 2.6 of this ISI Program Plan.

Item Numbers B5.40 through B5.120 below do not apply to the PNPS plant design. No examinations are required.

- ☐ **Item No. B5.40: Pressurizer – NPS 4 or Larger Nozzle-to-Safe End Butt Welds**
- ☐ **Item No. B5.50: Pressurizer – Less Than NPS 4 Nozzle-to-Safe End Butt Welds**
- ☐ **Item No. B5.60: Pressurizer – Nozzle-to-Safe End Socket Welds**

- ☐ **Item No. B5.70: Steam Generator – NPS 4 or Larger Nozzle-to-Safe End Butt Welds**
- ☐ **Item No. B5.80: Steam Generator – Less Than NPS 4 Nozzle-to-Safe End Butt Welds**
- ☐ **Item No. B5.90: Steam Generator – Nozzle-to-Safe End Socket Welds**

- ☐ **Item No. B5.100: Heat Exchangers – NPS 4 or Larger Nozzle-to-Safe End Butt Welds**
- ☐ **Item No. B5.110: Heat Exchangers – Less Than NPS 4 Nozzle-to-Safe End Butt Welds**
- ☐ **Item No. B5.120: Heat Exchangers – Nozzle-to-Safe End Socket Welds**

2.1.3.5 Examination Category B-G-1, Pressure Retaining Bolting, Greater Than 2" In Diameter

Note: In accordance with 4th Interval Relief Request PRR-14, it is proposed that bolting be selected and examined in accordance with ASME Code Case N-652. See Appendix B for details of this request.

For all items in Examination Category B-G-1, the following requirements from ASME CC N-652 apply:

(1) Bolting may be examined:

(a) in place under tension;
(b) when the connection is disassembled;
(c) when the bolting is removed.

(2) When bolts or studs are removed for examination, surface examination meeting the acceptance standards of IWB-3515 may be substituted for volumetric examination.

(3) Bushings and threads in base material of flanges are required to be examined only when the connections are disassembled. Bushings may be inspected in place.

(4) Volumetric examination of bolting for heat exchangers, pumps, or valves may be conducted on one heat exchanger, one pump, or one valve among a group of heat exchangers, pumps, or valves that are similar in design, type, and function. In addition, when the component to be examined contains a group of bolted connections of similar design and size, such as flanged connections, the examination may be conducted on one bolted connection among the group.

(5) Visual examination of bolting for heat exchangers, pumps, or valves is required only when the component is examined under Examination Category B-B, B-L-2, or B-M-2. Examination of a bolted connection is required only once during the interval.

(6) The examination of flange bolting in piping systems may be limited to one bolted connection among a group of bolted connections that are similar in design, size, function, and service.

- ☐ **Item No. B6.10: Reactor Vessel – Closure Head Nuts**
- ☐ **Item No. B6.20: Reactor Vessel – Closure Studs**
- ☐ **Item No. B6.40: Reactor Vessel – Threads in Flange**
- ☐ **Item No. B6.50: Reactor Vessel – Closure Washers, Bushings**

- Examination Requirements / Fig. No.: Closure Head Nuts and Closure Washers, Bushings: Surfaces. Closure Studs and Threads in Flange: IWB-2500-12.
- Examination Method: Closure Head Nuts and Closure Washers, Bushings: Visual (VT-1). Closure Studs and Threads in Flange: Volumetric.
  Acceptance Standard: IWB-3517 (Closure Head Nuts and Closure Washers, Bushings); IWB-3515 (Closure Studs and Threads in Flange).
- Extent and Frequency of Examination: All bolts, studs, nuts, bushings, threads in flange stud holes.
- Deferral: Deferral of examinations to end of interval is permissible.

- **Item No. B6.60: Pressurizer – Bolts and Studs**
- **Item No. B6.70: Pressurizer – Flange Surface, when connection disassembled (examination includes 1" annular surface of flange surrounding each stud)**
- **Item No. B6.80: Pressurizer – Nuts, Bushings, and Washers**

- **Item No. B6.90: Steam Generators – Bolts and Studs**
- **Item No. B6.100: Steam Generators – Flange Surface, when connection disassembled (examination includes 1" annular surface of flange surrounding each stud)**
- **Item No. B6.110: Steam Generators – Nuts, Bushings, and Washers**

- **Item No. B6.120: Heat Exchangers – Bolts and Studs**
- **Item No. B6.130: Heat Exchangers – Flange Surface, when connection disassembled (examination includes 1" annular surface of flange surrounding each stud)**
- **Item No. B6.140: Heat Exchangers – Nuts, Bushings, and Washers**

- **Item No. B6.150: Piping – Bolts and Studs**
- **Item No. B6.160: Piping – Flange Surface, when connection disassembled (examination includes 1" annular surface of flange surrounding each stud)**
- **Item No. B6.170: Piping – Nuts, Bushings, and Washers**

- **Item No. B6.210: Valves – Bolts and Studs**
- **Item No. B6.220: Valves – Flange Surface, when connection disassembled (examination includes 1" annular surface of flange surrounding each stud)**
- **Item No. B6.230: Valves – Nuts, Bushings, and Washers**

Item numbers B6.60 through B6.170, and B6.210 through B6.230 above do <u>not</u> apply to the PNPS plant design. No examinations are required.

- **Item No. B6.180: Pumps – Bolts and Studs**
- **Item No. B6.190: Pumps – Flange Surface, when connection disassembled (examination includes 1" annular surface of flange surrounding each stud)**
- **Item No. B6.200: Pumps – Nuts, Bushings, and Washers**

The following applies for Items B6.180 through B6.200 above:

- <u>Examination Requirements / Fig. No.</u>: Bolts and Studs: IWB-2500-12; Flange Surfaces, and Nuts, Bushings, and Washers: Surfaces.
- <u>Examination Method</u>: Bolts and Studs: Volumetric; Flange Surfaces, and Nuts, Bushings, and Washers: Visual (VT-1)
- <u>Acceptance Standard</u>: IWB-3515 (Bolts and Studs); IWB-3517 (Flange Surfaces, and Nuts, Bushings, and Washers).
- <u>Extent and Frequency of Examination</u>: All bolts, studs, nuts, bushings, and flange surfaces.
- <u>Deferral</u>: Deferral of examinations to end of interval is permissible.

2.1.3.6 Examination Category B-G-2, Pressure Retaining Bolting, 2" And Less in Diameter

Note: (1) In accordance with 4th Interval Relief Request PRR-14, it is proposed that bolting be selected and examined in accordance with ASME Code Case N-652. *See Appendix B for further details of this Relief Request.*

- ❑ **Item No. B7.10: Reactor Vessel – Bolts, Studs, and Nuts**
- ❑ **Item No. B7.20: Pressurizer – Bolts, Studs, and Nuts**
- ❑ **Item No. B7.30: Steam Generators – Bolts, Studs, and Nuts**
- ❑ **Item No. B7.40: Heat Exchangers – Bolts, Studs, and Nuts**
- ❑ **Item No. B7.50: Piping – Bolts, Studs, and Nuts**
- ❑ **Item No. B7.60: Pumps – Bolts, Studs, and Nuts**
- ❑ **Item No. B7.70: Valves – Bolts, Studs, and Nuts**

Item Numbers B7.20, B7.30, and B7.40 of Examination Category B-G-2 do not apply to the PNPS plant design. No examinations are required.

For Item Nos. B7.10, B7.50, B7.60, and B7.70 in Examination Category B-G-2, bolting is required to be examined only when a connection is disassembled or bolting is removed (per ASME CC N-652).

The following applies Item Nos. B7.10, B7.50, B7.60, and B7.70 in Examination Category B-G-2:

- Examination Requirements / Fig. No.: Surface.
- Examination Method: Visual (VT-1).
- Acceptance Standard: IWB-3517.
- Extent and Frequency of Examination: All bolts, studs, and nuts. ASME Code Case N-652 also specifies the following requirements:
  - For vessels, pumps, or valves, examination of bolting is required only when the component is examined under Examination Category B-B, B-L-2, or B-M-2. Examination of a bolted connection is required only once during the interval.
  - The examination of flange bolting in piping systems may be limited to one bolted connection among a group of bolted connections that are similar in design, size, function, and service. Examination is required only when the flange is disassembled. Examination of a bolted connection is required only once during the interval.
- Deferral: Deferral of examinations to end of interval is not permissible.

2.1.3.7 Examination Category B-J, Pressure Retaining Welds in Piping

Notes: (1) The Risk-Informed Inservice Inspection (RI-ISI) application on Class 1 piping welds was first incorporated into the Third Ten-Year Interval Inservice Inspection Plan. As part of this application, Class 1 Examination Category B-J circumferential piping welds were assigned alternate Examination Category and Code Item Numbers that were consistent with ASME Section XI Code Case N-578-1. The alternate Examination Category and Code Item Numbers are discussed in Section

2.6 of this ISI Program Plan. For the Fourth Ten-Year Interval, continued use of the RI-ISI application on Class 1 Examination Category B-J piping welds is proposed under Relief Request PRR-10.

(2) RI-ISI Examination Category R-A Item No. R1.16 welds classified as Categories "B" through "G" per USNRC Generic Letter 88-01 are examined in accordance with the PNPS IGSCC Program. See Section 1.5.1.6 of this ISI Program Plan for further information.

(3) See Table 3.1-6 (Examination Category R-A) for period scheduling. The Examination Category B-J weld counts in Table 3.1-1 are maintained for historical reference purposes only.

- ❑ **Item No. B9.11, Circumferential Welds NPS 4" or Larger**
- ❑ **Item No. B9.21: Circumferential Welds Less Than NPS 4"**
- ❑ **Item No. B9.31, Branch Pipe Connection Welds NPS 4" or Larger**
- ❑ **Item No. B9.32: Branch Pipe Connection Welds Less Than NPS 4"**
- ❑ **Item No. B9.40: Socket Welds**

- Examination Requirements / Fig. No.: See Sections 1.5.1.6 and 2.6 of this ISI Program Plan.
- Examination Method: See Sections 1.5.1.6 and 2.6 of this ISI Program Plan.
- Acceptance Standard: See Sections 1.5.1.6 and 2.6 of this ISI Program Plan.
- Extent and Frequency of Examination: See Sections 1.5.1.6 and 2.6 of this ISI Program Plan.
- Deferral: See Sections 1.5.1.6 and 2.6 of this ISI Program Plan.

2.1.3.8 Examination Category B-K, Welded Attachments for Vessels, Piping, Pumps, and Valves

- ❑ **Item No. B10.10: Pressure Vessels - Welded Attachments**
- ❑ **Item No. B10.20: Piping - Welded Attachments**
- ❑ **Item No. B10.30: Pumps - Welded Attachments**
- ❑ **Item No. B10.40: Valves - Welded Attachments**

The following applies for all items:

- Parts Examined: Weld buildup on nozzles that is in compression under normal conditions and provides only component support is excluded from examination. Examination is limited to those welded attachments that meet the following conditions: (a) the attachment is on the outside surface of the pressure retaining component; (b) the attachment provides component support as defined in NF-1110; (c) the attachment weld joins the attachment either directly to the surface of the component or to an integrally cast or forged attachment to the component, and (d) the attachment weld is full penetration fillet, or partial penetration, continuous or intermittent.
- Examination Requirements / Fig. No.: IWB-2500-13, -14, and -15.
- Examination Method: Surface. For Item No. B10.10 (welded attachments to pressure vessels), the following applies: For the configurations shown in Figs. IWB-2500-13 and IWB-2500-14, a surface examination from an accessible

side of the attachment weld shall be performed. Alternatively, for the configuration shown in Fig. IWB-2500-14, a volumetric examination of volume A-B-C-D from an accessible side of the attachment weld may be performed in lieu of the surface examination of surfaces A-B or C-D.

- Acceptance Standard: IWB-3516.
- Extent and Frequency of Examination: Each welded attachment and each identified occurrence. The extent of the examination includes essentially 100% of the length of the attachment weld at each attachment subject to examination. Selected samples of welded attachments shall be examined each inspection interval. Examination is required whenever component support member deformation, e.g., broken, bent, or pulled out parts, is identified during operation, refueling, maintenance, examination, or testing. Additionally, the following applies:

  - B10.10: For multiple vessels of similar design, function and service, only one welded attachment of only one of the multiple vessels shall be selected for examination.
  - B10.20, B10.30, B10.40: For piping, pumps, and valves, a sample of 10% of the welded attachments associated with the component supports selected for examination under IWF-2510 shall be examined.

- Deferral: Deferral of examinations to end of interval is not permissible.

2.1.3.9 Examination Category B-L-1, Pressure Retaining Welds in Pump Casings

❑ **Item No. B12.10: Pumps - Pump Casing Welds**

- Examination Requirements / Fig. No.: IWB-2500-16.
- Examination Method: Visual, VT-1.
- Acceptance Standard: IWB-3518.
- Extent and Frequency of Examination: All welds, includes essentially 100% of weld length. Examinations are limited to at least one pump in each group of pumps performing similar functions in the system, e.g., recirculating coolant pumps.
- Deferral: Deferral of examinations to end of interval is permissible.

2.1.3.10 Examination Category B-L-2, Pump Casings

❑ **Item No. B12.20: Pumps - Pump Casing**

- Examination Requirements / Fig. No.: Internal surfaces.
- Examination Method: Visual, VT-3.
- Acceptance Standard: IWB-3519.
- Extent and Frequency of Examination: Internal surfaces. Examinations are limited to at least one pump in each group of pumps performing similar functions in the system, e.g., Recirculating coolant pumps. Examinations are performed once per interval when disassembled for maintenance, repair, or volumetric examination.

- Deferral: Examination is required only when a pump is disassembled for maintenance, repair, or volumetric examination. Examination of the internal pressure boundary shall include the internal pressure retaining surfaces made accessible for examination by disassembly. If a partial examination is performed and a subsequent disassembly of that pump allows a more extensive examination, an examination shall be performed during the subsequent disassembly. A complete examination is required only once during the interval.

2.1.3.11 Examination Category B-M-1, Pressure Retaining Welds in Valve Bodies

- ☐ **Item No. B12.30: Valves – Valves, Less Than NPS 4 Valve Body Welds**
- ☐ **Item No. B12.40: Valves – Valves, NPS 4 or Larger Valve Body Welds**

The following applies for both items:

- Examination Requirements / Fig. No.: IWB-2500-17.
- Examination Method: Surface (B12.30); Volumetric (B12.40).
- Acceptance Standard: IWB-3518.
- Extent and Frequency of Examination: All welds, includes essentially 100% of weld length. Examinations are limited to at least one valve within each group of valves that are of the same size, constructional design (such as globe, gate, or check valves), and manufacturing method, and that perform similar functions in the system (such as containment isolation and system overpressure protection). Examinations are performed once per interval.
- Deferral: Deferral of examinations to end of interval is permissible.

2.1.3.12 Examination Category B-M-2, Valve Bodies

- ☐ **Item No. B12.50: Valves - Valve Body, Exceeding NPS 4**

- Examination Requirements / Fig. No.: Internal surfaces.
- Examination Method: Visual, VT-3
- Acceptance Standard: IWB-3519.
- Extent and Frequency of Examination: Internal surface of at least one valve within each group of valves that are of the same size, constructional design (such as globe, gate, or check valves), and manufacturing method, and that perform similar functions in the system (such as containment isolation and system overpressure protection). Examinations are performed once per interval when disassembled for maintenance, repair, or volumetric examination.
- Deferral: Examination is required only when a valve is disassembled for maintenance, repair, or volumetric examination. Examination of the internal pressure boundary shall include the internal pressure retaining surfaces made accessible for examination by disassembly. If a partial examination is performed and a subsequent disassembly of that valve allows a more extensive examination, an examination shall be performed during the subsequent disassembly. A complete examination is required only once during the interval.

2.1.3.13 Examination Category B-N-1, Interior of Reactor Vessel

Note: Procedure No. NE21.01, *Reactor Vessel Internals Inspection Implementing Procedure*, addresses the requirements of ASME Section XI, Table IWB-2500-1, Examination Category B-N-1. See Section 1.5.1.4 of this ISI Program Plan for further information.

- **Item No. B13.10: Reactor Vessel - Vessel Interior**

  - Examination Requirements / Fig. No.: Accessible areas, including spaces above and below the reactor core that are made accessible for examination by removal of components during normal refueling outages.
  - Examination Method: Visual, VT-3
  - Acceptance Standard: IWB-3520.2
  - Extent and Frequency of Examination: Once each inspection period.
  - Deferral: Deferral of examinations to end of interval is not permissible.

2.1.3.14 Examination Category B-N-2, Welded Core Support Structures and Interior Attachments to Reactor Vessels

Note: Procedure No. NE21.01, *Reactor Vessel Internals Inspection Implementing Procedure*, addresses the requirements of ASME Section XI, Table IWB-2500-1, Examination Category B-N-2. See Section 1.5.1.4 of this ISI Program Plan for further information.

- **Item B13.20: Reactor Vessel (BWR) - Interior Attachments Within Beltline Region**
- **Item B13.30: Reactor Vessel (BWR) - Interior Attachments Beyond Beltline Region**
- **Item B13.40: Reactor Vessel (BWR) - Core Support Structure**

- **Item B13.50: Reactor Vessel (PWR) - Interior Attachments Within Beltline Region**
- **Item B13.60: Reactor Vessel (PWR) - Interior Attachments Beyond Beltline Region**

The following applies for all items, except B13.50 and B13.60. Item Nos. B13.50 and B13.60 do not apply to the PNPS plant design.

- Examination Requirements / Fig. No.: Accessible welds (B13.20 & B13.30); accessible surfaces (B13.40).
- Examination Method: Visual, VT-1 (B13.20); Visual, VT-3 (B13.30 & B13.40).
- Acceptance Standard: IWB-3520.1 (B13.20); IWB-3520.2 (B13.30 & B13.40).
- Extent and Frequency of Examination: Welds (B13.20 & B13.30); Surfaces (B13.40). Each item once per interval.
- Deferral: Deferral of examinations to end of interval is permissible.

2.1.3.15 Examination Category B-N-3, Removable Core Support Structures

- **Item B13.70: Reactor Vessel (PWR) - Core Support Structure**

This examination area and item number does not apply to the PNPS plant design. No examinations are required.

2.1.3.16 Examination Category B-O, Pressure Retaining Welds in Control Rod Housings

- **Item No. B14.10: Reactor Vessel – Welds in CRD Housing**

  - Examination Requirements / Fig. No.: IWB-2500-18
  - Examination Method: Volumetric or surface
  - Acceptance Standard: IWB-3523
  - Extent and Frequency of Examination: 10% peripheral CRD housings during the inspection interval.
  - Deferral: Deferral of examinations to end of interval is permissible.

2.1.3.17 Examination Category B-P, All Pressure Retaining Components

Note: Per IWA-5110(c), "*piping that penetrates a containment vessel is exempt from the periodic system pressure test when the piping and isolation valves perform a containment function and the balance of the piping system is outside the scope of this Division*".

- **Item No. B15.10: Reactor Vessel – Pressure Retaining Boundary**
- **Item No. B15.20: Pressurizer – Pressure Retaining Boundary**
- **Item No. B15.30: Steam Generators – Pressure Retaining Boundary**
- **Item No. B15.40: Heat Exchangers – Pressure Retaining Boundary**
- **Item No. B15.50: Piping – Pressure Retaining Boundary**
- **Item No. B15.60: Pumps – Pressure Retaining Boundary**
- **Item No. B15.70: Valves – Pressure Retaining Boundary**

The following applies for all items, except B15.20, B15.30, and B15.40. Item Nos. B15.20, B15.30, and B15.40 do not apply to the PNPS plant design. See Section 1.11.2 for further information on periodic system pressure testing.

  - Test Requirements: System leakage test per IWB-5220. The pressure-retaining boundary during the system leakage test shall correspond to the reactor coolant boundary, with all valves in the position required for normal reactor startup.
  - Examination Method: Visual (VT-2) per IWA-5240. The visual examination shall extend to and include the second closed valve at the boundary extremity.
  - Acceptance Standard: IWB-3522.
  - Extent and Frequency of Examination: Each refueling outage prior to plant startup. The pressure-retaining boundary during the system leakage test conducted at or near the end of the inspection interval shall extend to all Class 1 pressure retaining components within the system boundary. For Item Nos. B15.10, B15.50, B15.60, B15.70, Entergy proposes performing the system leakage test for the special situation mechanical joints listed in Relief Request PRR-2 at 930 psig. For these joints, disposition of observed leakage will

consider the marginal increase in leakage rates that would occur at the nominal operating pressure associated with 100% rated reactor power. Per Relief Request PRR-4, Entergy proposes that the Item No. B15.50 and B15.70 RCPB vent, drain, and branch lines and connections (VTDB) be visually examined for leakage and any evidence of past leakage with the isolation valves in the normally closed position.

- Deferral: Deferral of examinations to end of interval is not permissible.

2.1.3.18 Examination Category B-Q, Steam Generator Tubing

- **Item No. B16.10: Steam Generator Tubing in Straight Tube Design**
- **Item No. B16.20: Steam Generator Tubing in U-Tube Design**

This examination category and associated two item numbers do not apply to the PNPS plant design. No examinations are required.

2.2 CLASS 2 SYSTEMS / COMPONENTS (IWC)

The ASME Code Class 2 system boundaries subject to examination and testing were developed based upon the requirements of 10 CFR 50.2(v) and PNPS Final Safety Analysis Report (FSAR). The ASME Code Class 2 pressure retaining components and their welded attachments subject to examination and inspection are described below:

2.2.1 Components Subject to Examination (IWC-1210)

Components subject to examination are all Class 2 pressure retaining components and their welded attachments.

2.2.2 Components Exempt from Examination (IWC-1220)

A. *Components Within Residual Heat Removal (RHR), Emergency Core Cooling (ECC), and Containment Heat Removal (CHR) Systems (or Portions of Systems) [IWC-1221]*

(1) Piping, vessels, pumps, and valves and their connections in piping NPS 4" and smaller in all systems.

(2) Piping and other components of any size beyond the last shutoff valve in open ended portions of systems that do not contain water during normal plant operating conditions.

B. *Components Within Systems or Portions of Systems Other Than RHR ECC, and CHR Systems [IWC-1222]*

(1) Piping, vessels, pumps, and valves and their connections in piping NPS 4" and smaller.

(2) Vessels, piping, pumps, valves, other components, and component connections of any size in systems or portions of systems that operate (when the system function

is required) at a pressure equal to or less than 275 psig and at a temperature equal to or less than 200°F.

(3) Piping and other components of any size beyond the last shut off valve in open-ended portions of systems that do not contain water during normal plant operating conditions.

C. *Inaccessible Welds [IWC-1223]*

(1) Welds or portions of welds that are inaccessible due to being encased in concrete, buried underground, located inside a penetration, or encapsulated by guard pipe.

2.2.3 IWC Component / Piping Examination Development

Class 2 components subject to examination are identified in Section 4.0. A narrative discussion of Class 2 components subject to examination and inspection is described below:

2.2.3.1 Examination Category C-A, Pressure Retaining Welds in Pressure Vessels

- **Item No. C1.10: Shell Circumferential Welds**
- **Item No. C1.20: Head Circumferential Welds**
- **Item No. C1.30: Tubesheet-to-Shell Weld**

- Examination Requirements / Fig. No.: IWC-2500-1 (Shell Circumferential Welds and Head Circumferential Welds); IWC-2500-2 (Tubesheet-to-Shell Weld)
- Examination Method: Volumetric. For welds in any vessels with a nominal wall thickness of 0.2 in. or less, a surface examination may be applied in lieu of a volumetric examination. This surface examination shall include the weld and 0.5 in. on either side of the weld. The acceptance standard for the surface examination shall be those specified for piping in IWC-3514 (i.e., IWB-3514).
- Acceptance Standard: IWC-3510.
- Extent and Frequency of Examination: The vessel areas selected for the initial examination shall be reexamined in the same sequence over the service lifetime of the component, to the extent practical.
  - *Shell Circumferential Welds*: Welds at gross structural discontinuity only, each inspection interval. Includes essentially 100% of the weld length. Gross structural discontinuity is defined in NB-3213.2. Examples are junctions between shells of different thicknesses, cylindrical shell-to-conical shell junctions, shell (or head)-to-flange welds, and head-to-shell welds.
  - *Head Circumferential Welds*: Head-to-shell weld, each inspection interval. Includes essentially 100% of the weld length.
  - *Tubesheet-to-Shell Weld*: Tubesheet-to-shell weld, each inspection interval. Includes essentially 100% of the weld length.

2.2.3.2 Examination Category C-B, Pressure Retaining Nozzle Welds in Vessels

Note: Item Nos. C2.11, C2.21, C2.22, and C2.32 are not applicable to PNPS.

- ❑ **Item No. C2.11: Nozzles in Vessels ≤ ½" Nominal Thickness – Nozzle-to-Shell (or Head) Weld**
- ❑ **Item No. C2.21: Nozzles Without Reinforcing Plate in Vessels > ½" Nominal Thickness – Nozzle-to-Shell (or Head) Weld**
- ❑ **Item No. C2.22: Nozzles Without Reinforcing Plate in Vessels > ½" Nominal Thickness – Nozzle Inside Radius Section**

- ❑ **Item No. C2.31: Nozzles With Reinforcing Plate in Vessels > ½" Nominal Thickness – Reinforcing Plate Welds to Nozzle and Vessel**
- ❑ **Item No. C2.32: Nozzles With Reinforcing Plate in Vessels > ½" Nominal Thickness – Nozzle-to-Shell (or Head) Welds When Inside of Vessel is Accessible**
- ❑ **Item No. C2.33: Nozzles With Reinforcing Plate in Vessels > ½" Nominal Thickness – Nozzle-to-Shell (or Head) Welds When Inside of Vessel is Inaccessible**

Note: Entergy may elect to utilize conditionally acceptable ASME Code Case N-552 *Alternative Methods - Qualification for Nozzle Inside Radius Section from the Outside Surface, Section XI, Division 1* for the qualification of methods for examination of the nozzle inside radius section from the outside surface, subject to any conditions stated in USNRC Reg. Guide 1.147.

- Examination Requirements / Fig. No.:
  - *Item No. C2.11*: IWC-2500-3.
  - *Item Nos. C2.21 and C2.22*: IWC-2500-4(a) or (b).
  - *Item Nos. C2.31 and C2.32*: IWC-2500-4(c).
  - *Item No. C2.33*: The telltale hole in referencing plate shall be examined for evidence of leakage while vessel is undergoing the system leakage test (IWC-5220) as required by Examination Category C-H.
- Examination Method:
  - *Item No. C2.11 and C2.31*: Surface.
  - *Item No. C2.21*: Surface and volumetric.
  - *Item No. C2.22 and C2.32*: Volumetric.
  - *Item No. C2.33*: Visual (VT-2).
- Acceptance Standard: IWC-3511, except for Item No. C2.33. For Item No. C2.33, no leakage.
- Extent and Frequency of Examination: All nozzles at terminal ends of piping runs, each inspection interval. Includes nozzles welded to or integrally cast in vessels that connect to piping runs (manways and handholes are excluded, if applicable). Includes only those piping runs selected for examination under Examination Category C-F. In the case of multiple vessels of similar design, size, and service (such as heat exchangers), the required examinations be limited to one vessel or distributed among the vessels. The nozzles selected initially for examination shall be reexamined in the same sequence over the service lifetime of the component, to the extent practical.

2.2.3.3 Examination Category C-C, Welded Attachments for Vessels, Piping, Pumps, & Valves

- Item No. C3.10: Pressure Vessels – Welded Attachments
- Item No. C3.20: Piping – Welded Attachments
- Item No. C3.30: Pumps – Welded Attachments
- Item No. C3.40: Valves – Welded Attachments

- Examination Requirements / Fig. No.: IWC-2500-5.
- Examination Method: Surface.
- Acceptance Standard: IWC-3512.
- Extent and Frequency of Examination: 100% of required areas of each welded attachment; each identified occurrence and each inspection interval. Examination is limited to those welded attachments that meet the following conditions:

  (a) The attachment is on the outside surface of the pressure-retaining component;

  (b) The attachment provides component support as defined in NF-1110;

  (c) The attachment weld joins the attachment either directly to the surface of the component or to an integrally cast or forged attachment to the component; and

  (d) The attachment weld is full penetration, fillet, or partial penetration, continuous, or intermittent.

  The extent of the examination includes essentially 100% of the length of the attachment weld at each attachment subject to examination. Selected samples of welded attachments shall be examined each inspection interval. Examination is required whenever component support member deformation, e.g., broken, bent, or pulled out parts, is identified during operation, refueling, maintenance, examination, or testing.

  - *Pressure Vessels – Welded Attachments*: For multiple vessels of similar design, function, and service, only one welded attachment of only one of the multiple vessels shall be selected for examination.

  - *Piping, Pumps, and Valves*: For piping, pumps, and valves, a sample of 10% of the welded attachments associated with the component supports selected for examination under IWF-2510 shall be examined.

2.2.3.4 Examination Category C-D, Pressure Retaining Bolting Greater Than 2" In Diameter

Note: In accordance with the PRR-14 Relief Request, Item No. C4.20 bolting, if any, will be selected and examined in accordance with Code Case N-652. See Appendix B for further details. At the start of the Fourth Interval, PNPS did not have any Examination Category C-D bolting.

- ❑ **Item No. C4.10: Pressure Vessels – Bolts and Studs**
- ❑ **Item No. C4.20: Piping – Bolts and Studs**
- ❑ **Item No. C4.30: Pumps – Bolts and Studs**
- ❑ **Item No. C4.40: Valves – Bolts and Studs**

  - Examination Requirements / Fig. No.: IWC-2500-6.
  - Examination Method: Volumetric.
  - Acceptance Standard: IWC-3513.
  - Extent and Frequency of Examination: 100% of bolts and studs at each bolted connection of components required to be inspected, each inspection interval. The examination may be performed on bolting in place under load or upon disassembly of the connection. The examination of bolting for vessels, pumps, and valves may be conducted on one vessel, one pump, one valve among a group of vessels, pumps, and valves in each system required to be examined and which are similar in design, size, function, and service. In addition, where the one component to be examined contains a group of bolted connections of similar design and size (such as flange connections, manway covers), the examination may be conducted on one bolted connection among the group. The examination of flange bolting in piping systems required to be examined may be limited to the flange connections in pipe runs selected for examination under Examination Category C-F. The areas selected for the initial examination shall be reexamined in the same sequence over the service lifetime of the component, to the extent practical.

2.2.3.5 Examination Category C-F-1, Pressure Retaining Welds in Austenitic Stainless Steel or High Alloy Piping

Note 1: Item Nos. C5.21, C5.30, and C5.41 do not apply to PNPS.

Note 2: Per Relief Request PRR-8, Entergy proposes use of ASME Code Case N-663 in its entirety as an alternative to the surface examination requirements of Table IWC-2500-1 for all items under Examination Categories C-F-1. All areas of the subject welds identified as susceptible to outside surface attack will be surface examined during the Pilgrim Fourth Ten-Year Interval in accordance with Code Case N-663.

- ❑ **Item No. C5.11: Piping Welds ≥ 3/8" Nominal Wall Thickness for Piping > NPS 4" – Circumferential Welds**
- ❑ **Item No. C5.21: Piping Welds > 1/5" Nominal Wall Thickness for Piping ≥ NPS 2"and ≤ NPS 4" – Circumferential Welds**
- ❑ **Item No. C5.30: Socket Welds**
- ❑ **Item No. C5.41: Pipe Branch Connections of Branch Piping ≥ NPS 2" – Circumferential Welds**

  - Examination Requirements / Fig. No.: IWC-2500-7, except for Item No. C5.41. For Item No. C5.41, IWC-2500-9 to –13, inclusive.
  - Examination Method: Volumetric or surface per ASME Code Case N-663.
  - Acceptance Standard: IWC-3514.
  - Extent and Frequency of Examination: 100% of each weld requiring examination, each inspection interval. Requirements for examination of

welds in piping ≤ NPS 4" apply to PWR high pressure safety injection and auxiliary feedwater systems in accordance with the exemption criteria of IWC-1220. The welds selected for examination shall include 7.5%, but not less than 28 welds, of all dissimilar metal, austenitic stainless steel or high alloy welds not exempted by IWC-1220. (Some welds not exempted by IWC-1220 are not required to be nondestructively examined per Examination Category C-F-1. These welds, however, shall be included in the total weld count to which the 7.5% sampling rate is applied.) The examinations shall be distributed as follows:

(a) the examinations shall be distributed among the Class 2 systems prorated, to the degree practicable, on the number of nonexempt dissimilar metal, austenitic stainless steel, or high alloy welds in each system (i.e., if a system contains 30% of the nonexempt welds, then 30% of the nondestructive examinations required by Examination Category C-F-1 should be performed on that system);

(b) within a system, the examinations shall be distributed among terminal ends, dissimilar metal welds, and structural discontinuities prorated, to the degree practicable, on the number of nonexempt terminal ends, dissimilar metal welds, and structural discontinuities in that system. Structural discontinuities include pipe weld joints to vessel nozzles, valve bodies, pump casings, pipe fittings (such as elbows, tees, reducers, flanges, etc., conforming to ANSI B16.9), and pipe branch connections and fittings; and

(c) within each system, examinations shall be distributed between line sizes prorated to the degree practicable.

The welds selected for examination shall be reexamined in the same sequence, during subsequent inspection intervals over the service lifetime of the piping component, to the extent practical. For circumferential welds with intersecting longitudinal welds, surface examination of the longitudinal piping welds is required for those portions of the welds, within the examination boundaries of intersecting circumferential welds. For circumferential welds with intersecting longitudinal welds, volumetric examination of the longitudinal piping welds is required for those portions of the welds within the examination boundaries of intersecting circumferential welds. The following requirements shall also be met:

(a) When longitudinal welds are specified and locations are known, examination requirements shall be met for both transverse and parallel flaws at the intersection of the welds and for that length of longitudinal weld within the circumferential weld examination volume.

(b) When longitudinal welds are specified but locations are unknown, or the existence of longitudinal welds is uncertain, the examination requirements shall be met for both transverse and parallel flaws within the entire examination volume of intersecting circumferential welds.

2.2.3.6 Examination Category C-F-2, Pressure Retaining Welds in Carbon or Low Alloy Steel Piping

Note 1: Item No. C5.61 does not apply to PNPS.

Note 2: Per Relief Request PRR-8, Entergy proposes use of ASME Code Case N-663 in its entirety as an alternative to the surface examination requirements of Table IWC-2500-1 for all items under Examination Categories C-F-2. All areas of the subject welds identified as susceptible to outside surface attack will be surface examined during the Pilgrim Fourth Ten-Year Interval in accordance with Code Case N-663.

- ❑ **Item No. C5.51: Piping Welds ≥ 3/8" Nominal Wall Thickness for Piping > NPS 4" – Circumferential Welds**
- ❑ **Item No. C5.61: Piping Welds > 1/5" Nominal Wall Thickness for Piping ≥ NPS 2"and ≤ NPS 4" – Circumferential Welds**

- ❑ **Item No. C5.70: Socket Welds**
- ❑ **Item No. C5.81: Pipe Branch Connections of Branch Piping ≥ NPS 2" – Circumferential Welds**

- Examination Requirements / Fig. No.: IWC-2500-7, except for Item No. C5.81. For Item No. C5.81, IWC-2500-9 to -13, inclusive.
- Examination Method: Volumetric or surface per ASME Code Case N-663.
- Acceptance Standard: IWC-3514.
- Extent and Frequency of Examination: 100% of each weld requiring examination, each inspection interval. Requirements for examination of welds in piping ≤ NPS 4" apply to PWR high pressure safety injection systems in accordance with the exemption criteria of IWC-1220. The welds selected for examination shall include 7.5%, but not less than 28 welds, of all carbon and low alloy steel welds not exempted by IWC-1220. (Some welds not exempted by IWC-1220 are not required to be nondestructively examined per Examination Category C-F-2. These welds, however, shall be included in the total weld count to which the 7.5% sampling rate is applied.). The examinations shall be distributed as follows:

  (a) the examinations shall be distributed among the Class 2 systems prorated, to the degree practicable, on the number of nonexempt carbon and low alloy steel welds in each system (i.e., if a system contains 30% of the nonexempt welds, then 30% of the nondestructive examinations required by Examination Category C-F-2 should be performed on that system);

  (b) within a system, the examinations shall be distributed among terminal ends and structural discontinuities prorated, to the degree practicable, on the number of nonexempt terminal ends and structural discontinuities in that system. Structural discontinuities include pipe weld joints to vessel nozzles, valve bodies, pump casings, pipe fittings (such as elbows, tees, reducers, flanges, etc., conforming to ANSI B16.9), and pipe branch connections and fittings; and

(c) within each system, examinations shall be distributed between line sizes prorated to the degree practicable.

The welds selected for examination shall be reexamined in the same sequence, during subsequent inspection intervals over the service lifetime of the piping component, to the extent practical. For all circumferential welds with intersecting longitudinal welds, surface examination of the longitudinal piping welds is required for those portions of the welds within the examination boundaries of intersecting circumferential welds.

For C5.51 and C5.61, only those welds showing reportable preservice transverse indications need to be examined by the ultrasonic method for reflectors transverse to the weld length direction, except that for circumferential welds with intersecting longitudinal welds, volumetric examination of the longitudinal piping welds is required for those portions of the welds within the examination boundaries of intersecting circumferential welds. The following requirements shall also be met:

(a) When longitudinal welds are specified and locations are known, examination requirements shall be met for both transverse and parallel flaws at the intersection of the welds and for that length of longitudinal weld within the circumferential weld examination volume.

(b) When longitudinal welds are specified but locations are unknown, or the existence of longitudinal welds is uncertain, the examination requirements shall be met for both transverse and parallel flaws within the entire examination volume of intersecting circumferential welds.

2.2.3.7 Examination Category C-G, Pressure Retaining Welds in Pumps and Valves

- **Item No. C6.10: Pumps – Pump Casing Welds**
- **Item No. C6.20: Valves – Valve Body Welds**

Note: There were no Item No. C6.10 welds at PNPS at the start of the 4th ISI Interval.

- Examination Requirements / Fig. No.: IWC-2500-8.
- Examination Method: Surface.
- Acceptance Standard: IWC-3515.
- Extent and Frequency of Examination: 100% of welds in all components in each piping run examined under Examination Category C-F, during the inspection interval. The examination may be performed from either the inside or outside surface of the component. In case of multiple pumps or valves of similar design, size, function, and service in a system, required weld examinations may be limited to all welds in one pump or one valve in the same group or distributed among any of the pumps or valves of that same group. The pumps and valves initially selected for examination shall be reexamined in the same sequence over the service lifetime of the component, to the extent practical.

2.2.3.8 Examination Category C-H, All Pressure Retaining Components

- **Item No. C7.10: Pressure Retaining Components**

  Note: Per IWA-5110(c), "*piping that penetrates a containment vessel is exempt from the periodic system pressure test when the piping and isolation valves perform a containment function and the balance of the piping system is outside the scope of this Division*".

  - Test Requirement: System leakage test per IWC-5220.
  - Examination Method: Visual (VT-2) per IWA-5240.
  - Acceptance Standard: IWC-3516.
  - Extent and Frequency of Examination: Pressure retaining boundary, each inspection period. The pressure-retaining boundary includes only those portions of the system required to operate or support the safety function up to and including the first normally closed valve (including a safety or relief valve) or valve capable of automatic closure when the safety function is required. Open-ended discharge piping is excluded.

See Section 1.11.2 for further information on periodic system pressure testing.

2.3 CLASS 3 SYSTEMS / COMPONENTS (IWD)

The ASME Code Class 3 system boundaries subject to examination and testing were developed based upon the requirements of 10 CFR 50.2(v) and PNPS Final Safety Analysis Report (FSAR). The ASME Code Class 3 pressure retaining components and their welded attachments subject to examination and inspection are described below.

2.3.1 Components Subject to Examination (IWD-1210)

The ASME Code Class 3 components and systems (including their supports) subject to examination and testing are those pressure retaining components and their attachments on Class 3 systems in support of the following functions:

(a) Reactor shutdown
(b) Emergency core cooling
(c) Containment heat removal
(d) Atmosphere cleanup
(e) Reactor residual heat removal
(f) Residual heat removal from spent fuel storage pool

2.3.2 Components Exempt from Examination (IWD-1220)

The following components or parts of components are exempted from the VT-1 visual examination requirements of IWD-2500:

(a) Piping NPS 4" and smaller;

(b) Vessels, pumps, and valves and their connections in piping NPS 4" and smaller;

(c) Components that operate at a pressure of 275 psig or less and at a temperature of 200°F or less in systems (or portions of systems) whose function is not required in support of reactor residual heat removal, containment heat removal, and emergency core cooling;

(d) Welds or portions of welds that are inaccessible due to being encased in concrete, buried underground, located inside a penetration, or encapsulated by guard pipe.

2.3.3 IWD Component / Piping Examination Development

Class 3 components subject to examination and inspection per Article IWD-2000 are identified in Section 4.0. A narrative discussion of Class 3 components subject to examination and inspection is described below:

2.3.3.1 Examination Category D-A, Welded Attachments For Vessels, Piping, Pumps, And Valves

- **Item No. D1.10: Pressure Vessels – Welded Attachments**
- **Item No. D1.20: Piping – Welded Attachments**
- **Item No. D1.30: Pumps – Welded Attachments**
- **Item No. D1.40: Valves – Welded Attachments**

Note: There were no Item No. D1.40 welded attachments to valves at PNPS at the start of the 4th ISI Interval.

- Examination Requirements / Fig. No.: IWD-2500-1.
- Examination Method: Visual (VT-1).
- Acceptance Standard: IWD-3000.
- Extent and Frequency of Examination: 100% of required areas of each welded attachment, each identified occurrence and each inspection interval.

Examination is limited to those welded attachments that meet the following conditions:

(a) the attachment is on the outside surface of the pressure retaining component;

(b) the attachment provides component support as defined in NF-1110;

(c) the attachment weld joins the attachment either directly to the surface of the component or to an integrally cast or forged attachment to the component; and

(d) the attachment weld is full penetration, fillet, or partial penetration, continuous, or intermittent.

The extent of the examination includes essentially 100% of the length of the attachment weld at each attachment subject to examination. Selected samples of welded attachments shall be examined each inspection interval. All welded attachments selected for examination shall be those most subject to corrosion,

as determined by the Owner, such as the welded attachments of the Service Water or Emergency Service Water systems. For multiple vessels of similar design, function and service, the welded attachments of only one of the multiple vessels shall be selected for examination. For welded attachments of piping, pumps, and valves, a 10% sample shall be selected for examination. This percentage sample shall be proportional to the total number of nonexempt welded attachments connected to the piping, pumps, and valves in each system subject to these examinations. Examination is required whenever component support member deformation, e.g., broken, bent, or pulled out parts, is identified during operation, refueling, maintenance, examination, or testing.

2.3.3.2 Examination Category D-B, All Pressure Retaining Components

Note 1: Per 10CFR50.55a Request Number PIL-05-R-003, Entergy proposes to use Table IWD-2500-1 for Examination Category D-B from the 2001 Edition, through the 2003 Addenda, in place of the 1998 Edition, through the 2000 Addenda, for all Class 3 system pressure test requirements. The 1998 Edition, through the 2000 Addenda requires a system hydrostatic test with a VT-2 examination of all Class 3 pressure retaining components under Item No. D2.20, each inspection interval. This requirement and Item No. D2.20 have been deleted in their entirety from the 2001 Edition, 2003 Addenda.

Note 2: Per IWA-5110(c), "*piping that penetrates a containment vessel is exempt from the periodic system pressure test when the piping and isolation valves perform a containment function and the balance of the piping system is outside the scope of this Division*".

See Section 1.11.2 for further information on periodic system pressure testing.

- ☐ **Item No. D2.10: Pressure Retaining Components**
- ☐ **Item No. D2.20: Pressure Retaining Components**

  - Test Requirements:
    - Item No. D2.10: System leakage test per IWD-5221.
    - Item No. D2.20: System hydrostatic test per IWD-5222 (see Note 1 above).
  - Examination Method: Visual (VT-2).
  - Acceptance Standard: IWD-3000.
  - Extent and Frequency of Examination: Pressure retaining boundary. The pressure-retaining boundary includes only those portions of the system required to operate or support the safety function up to and including the first normally closed valve (including a safety or relief valve) or valve capable of automatic closure when the safety function is required. Open-ended discharge piping is excluded.
    - Item No. D2.10: Each inspection period.

- Item No. D2.20: Once during the inspection interval. The system hydrostatic test (IWD-5222) shall be conducted at or near the end of each inspection interval or during the same inspection period of each inspection interval of Inspection Program B (see Note 1 above).

2.4 CLASS MC COMPONENTS (IWE)

In accordance with 10CFR50.55a, PNPS does not have to submit to the NRC staff for approval the IWE Containment Inservice Inspection Program. The IWE ISI Program Plan is nevertheless included within this ISI Program Plan for comprehensiveness purposes. Previously, the PNPS IWE Program was an independent program from the ISI Program. The IWE Program elements and the required documentation shall be maintained on site for audit by the regulator at any time.

2.4.1 PNPS Primary Containment System (PCS) Design

The PNPS Primary Containment System (PCS) design employs a Low Leakage Pressure Suppression Containment System which houses the reactor vessel, the reactor coolant recirculating loops, and other branch connections of the Reactor Primary System. The Pressure Suppression System consists of a Drywell, a pressure suppression chamber (Torus), which stores a large volume of water, a connecting vent system between the drywell and the pressure suppression pool, isolation valves, Vacuum Relief System, Containment Cooling Systems, and other service equipment.

The Drywell is a steel pressure vessel with a spherical lower portion, 64 ft. in diameter, and a cylindrical upper portion 34 ft. 2 inches in diameter. The overall height is approximately 110 ft. The design, fabrication, inspection, and testing of the drywell vessel complies with requirements of the ASME Boiler & Pressure Vessel Code, Section III, Subsection B, Requirements for Class B Vessels, which pertain to containment vessels for nuclear power stations. The Drywell is enclosed in reinforced concrete for shielding purposes, and to provide additional resistance to deformation and buckling in areas where the concrete backs up the steel shell. Above the transition zone, the drywell is separated from the reinforced concrete by a gap of approximately 2 inches.

The pressure suppression pool, which is contained in the pressure suppression chamber, initially serves as the heat sink for any postulated transient or accident condition in which the normal heat sink, main condenser, or Shutdown Cooling System is unavailable. Energy is transferred to the pressure suppression pool by either the discharge piping from the reactor pressure relief valves or the Drywell Vent System. The relief valve discharge piping is used as the energy transfer path for any condition which requires the operation of the relief valves. The Drywell Vent System is the energy transfer path for all energy releases to the drywell.

The pressure suppression chamber is a steel pressure vessel in the shape of a torus below and encircling the drywell, with a centerline vertical diameter of 29 ft. 6 in. and a horizontal diameter of 131 ft. 6 in. The pressure suppression chamber contains approximately 84,000 ft^3 of water. The toroidal suppression chamber is designed to the same material and code requirements as the steel drywell vessel.

Large vent pipes connect the drywell and the pressure suppression chamber. A total of eight circular vent pipes are provided, each having a diameter of 6.75 ft. The vent pipes are designed

for the same pressure and temperature conditions as the drywell and suppression chamber. Jet deflectors are provided in the drywell at the entrance of each vent pipe to prevent possible damage to the vent pipes from jet forces which might accompany a pipe break in the drywell. The vent pipes are fabricated of SA-516 steel, and comply with requirements of the ASME Boiler and Pressure Vessel Code, Section III, Subsection B. The vent pipes are provided with expansion joints which are enclosed within sleeves, to accommodate differential motion between the drywell and suppression chamber.

The drywell vents are connected to a 4 ft. 9 in. diameter vent header in the form of a torus which is contained within the airspace of the suppression chamber. Projecting downward from the header are 96 downcomer pipes, 24 inches in diameter, terminating approximately 3'0" to 3'5" ft below the water surface of the pool. The vent header has the same temperature and pressure design requirements as the vent pipes. Vent pipes and vent headers are braced to withstand expected loads from steam blowdown into the pool.

The pressure suppression pool is approximately 84,000 ft^3 of demineralized water contained within the pressure suppression chamber. It serves both as a heat sink for postulated transients and accidents and as a source of water for the CSCS.

Containment penetrations are designed for the same pressure and temperature conditions as the drywell and pressure suppression chamber. Two general types of pipe penetrations are provided. Type 1 is used where the design must accommodate thermal movement. Type 2 is used where stresses due to thermal movement are relatively small.

Due to the fact that the Mark I containment design is free standing, and the reinforced concrete structure that surrounds it is only there for the purposes of missile protection and radiation shielding, ASME Section XI Subsection IWE will be the only examinations required by Code, e.g. Subsection IWL does not apply to the PNPS plant design.

The Drywell exterior surface of the BWR Mark I containment design is essentially inaccessible to inspection. Additionally, the Drywell interior surface below elevation 9'2" and portions of the vent system exterior surfaces between the Drywell and Torus are also inaccessible. Components or structures will not be disassembled solely for the purpose of inspection of containment surfaces.

2.4.2 Components Subject to Examination (IWE-1210)

Components subject to examination are Class MC pressure retaining components and their integral attachments. These examinations shall apply to surface areas, including welds and base metal.

2.4.3 Components Exempted from Examination (IWE-1220)

Components (or parts of components) exempted from the examination requirements of IWE-2000 are as follows:

- Vessels, parts, and appurtenances outside the boundaries of the containment system as defined in the Design Specifications;

- Embedded or inaccessible portions of containment vessels, parts, and appurtenances that met the requirements of the original Construction Code, such as the Drywell shell below elevation 9 foot 2 inches.
- Portions of containment vessels, parts, and appurtenances that become embedded or inaccessible as a result of vessel repair /replacement activities if the conditions of IWE-1232(a) and (b) and IWE-5220 are met;
- Piping, pumps, and valves that are part of the containment system, or which penetrate or are attached to the containment vessel. These components shall be examined in accordance with the requirements of IWB or IWC, as appropriate to the classification defined by the Design Specifications.

2.4.4 IWE Components Examination Development

Class MC pressure-retaining components and their integral attachments subject to examination are identified in Section 4.0 of this ISI Program Plan. A narrative discussion of IWE components subject to examination and testing is described below.

The General Visual Examinations required during each of the three Inspection Periods during the 4th Interval will be scheduled to coincide with the dates of the Appendix J containment walkdowns, which are typically performed prior to each Appendix J Type A test.

2.4.4.1 Examination Category E-A, Containment Surfaces

Examination shall include all accessible interior and exterior surfaces of Class MC components, parts, and appurtenances, and metallic shell and penetration liners of Class CC components. The following items shall be considered for examination:

- Integral attachments and structures that are parts of reinforcing structure, such as stiffening rings, manhole frames, and reinforcement around openings.
- Surfaces of attachment welds between structural attachments and the pressure retaining boundary or reinforcing structure, except for nonstructural or temporary attachments as defined in NE-4435 and minor permanent attachments as defined in CC-4543.4.
- Surfaces of containment structural and pressure boundary welds, including longitudinal welds (Category A), circumferential welds (Category B), flange welds (Category C), and nozzle-to-shell welds (Category D) as defined in NE-3351 for Class MC and CC-3840 for Class CC; and surfaces of Flued Head and Bellows Seal Circumferential Welds joined to the Penetration.
- Pressure-retaining bolted connections, including bolts, studs, nuts, bushings, washers, and threads in base material and flange ligaments between fastener holes. Bolted connections need not be disassembled for performance of examinations, and bolting may remain in place under tension.

- **Item No. E1.11: Containment Vessel Pressure Retaining Boundary – Accessible Surface Areas**

  - Examination Requirements / Fig. No.: IWE-2310.
  - Examination Method: General Visual. See Para. 2.4.5.2 of this ISI Program Plan for additional inspection requirements when conducting remote visual examinations.

- Acceptance Standard: IWE-3510.
- Extent and Frequency of Examination: 100% during each inspection period.
- Deferral: N/A.
- Note: An examination of the pressure-retaining containment bolted connections in Item E1.11 using the VT-3 examination method must be conducted once each interval per 10CFR50.55a(b)(2)(ix)(G). See Para. 2.4.5.4 of this ISI Program Plan for further requirements.

- **Item No. E1.12: Containment Vessel Pressure Retaining Boundary – Wetted Surfaces of Submerged Areas**

  - Examination Requirements / Fig. No.: IWE-2310.
  - Examination Method: VT-3 per 10CFR50.55a(b)(2)(ix)(G). See Para. 2.4.5.2 of this ISI Program Plan for additional inspection requirements when conducting remote visual examinations. The VT-3 examinations must be conducted in accordance with IWA-2200 (see Para. 2.4.5.3 of this ISI Program Plan).
  - Acceptance Standard: IWE-3510.
  - Extent and Frequency of Examination: 100% over the interval.
  - Deferral: Deferral of inspections to end of the interval is permissible.

- **Item No. E1.20: BWR Vent System – Accessible Surface Areas**

  - Examination Requirements / Fig. No.: IWE-2310. Includes flow-channeling devices within containment vessels.
  - Examination Method: VT-3 per 10CFR50.55a(b)(2)(ix)(G). See Para. 2.4.5.2 of this ISI Program Plan for additional inspection requirements when conducting remote visual examinations. The VT-3 examinations must be conducted in accordance with IWA-2200 (see Para. 2.4.5.3 of this ISI Program Plan).
  - Acceptance Standard: IWE-3510.
  - Extent and Frequency of Examination: 100% over the interval.
  - Deferral: Deferral of inspections to end of the interval is permissible.

- **Item No. E1.30: Moisture Barriers**

  - Examination Requirements / Fig. No.: IWE-2310, Fig. IWE-2500-1. Examination shall include moisture barrier materials intended to prevent intrusion of moisture against inaccessible areas of the pressure retaining metal containment shell or liner at concrete-to-metal interfaces and at metal-to-metal interfaces which are not seal-welded. Containment moisture barrier materials include caulking, flashing, and other sealants used for this application.
  - Examination Method: General Visual. See Para. 2.4.5.2 of this ISI Program Plan for additional inspection requirements when conducting remote visual examinations.
  - Acceptance Standard: IWE-3510.
  - Extent and Frequency of Examination: 100% during each inspection period.
  - Deferral: N/A.

2.4.4.2 Examination Category E-C, Containment Surfaces Requiring Augmented Examination (IWE-1240)

- **Item No. E4.11: Containment Surface Areas – Visible Surfaces**

  - Examination Requirements / Fig. No.: IWE-2310(c), IWE-2500(b)(1), IWE-2500(b)(2).
  - Examination Method: VT-1 per 10CFR50.55a(b)(2)(ix)(G). See Para. 2.4.5.2 of this ISI Program Plan for additional inspection requirements when conducting remote visual examinations. The VT-1 examinations must be conducted in accordance with IWA-2200 (see Para. 2.4.5.3 of this ISI Program Plan).
  - Acceptance Standard: IWE-3511.
  - Extent and Frequency of Examination: 100% of surface areas identified by IWE-1242. The extent of examination shall be 100% for each inspection period until the areas examined remain essentially unchanged for the next inspection period. Such areas no longer require augmented examination in accordance with IWE-2420(c).
  - Deferral: Deferral of inspections to end of the interval is not permissible.

- **Item No. E4.12: Containment Surface Areas – Surface Area Grid – Gridline Intersections and Minimum Wall Thickness Location**

  - Examination Requirements / Fig. No.: IWE-2310(b)(2), IWE-2500(b)(3), IWE-2500(b)(4).
  - Examination Method: Ultrasonic thickness.
  - Acceptance Standard: IWE-3511.
  - Extent and Frequency of Examination: 100% of gridline intersections and minimum wall thickness locations during each inspection period, established in accordance with IWE-2500(b)(3) and IWE-2500(b)(4). The extent of examination shall be 100% for each inspection period until the areas examined remain essentially unchanged for the next inspection period. Such areas no longer require augmented examination in accordance with IWE-2420(c).
  - Deferral: Deferral of inspections to end of the interval is not permissible.

2.4.4.2.1 Subsection IWE Code Examination Category E-C Augmented Examinations

Note: The augmented inspections identified for the 1st Period of the 4th ISI Inspection Interval fulfill the 3rd Period IWE inspection requirements under the 1992 Code.

The augmented examinations performed at Pilgrim Station in accordance with IWE-1240 are as listed below. Drawing ISI-IWE-AUG-1 describes the areas requiring examination, and PNPS Procedure No. NE15.04, *IWE Augmented Examinations*, provides the examination extent, method, and acceptance criteria.

A. *Leakage at Annulus Drain Lines, Code Item No. E4.11 (Visible Surfaces)*

Leakage from the refuel, spent fuel, and equipment pools could lead to corrosion of the Drywell shell by moisture entering the Drywell air gap and/or potentially being entrapped in the sand cushion area below the 9 foot 2 inch elevation. To monitor for this possibility, PNPS has been examining, as an augmented examination, the annulus drain lines for leakage. This examination is performed each refueling outage after flood-up and before drain down of the refuel cavity. Since the drain lines communicate directly with the air gap between the Drywell shell and concrete and are directly above the sand cushion, any water should flow through the drain lines before the possibility of wetting the sand cushion. The acceptance criteria for this examination is no detectable leakage from the drain lines.

Examination Required: VT-2 Leakage Test of the Annulus drain lines after each Reactor cavity flood-up and before drain down during each refuel outage.

Refer to PNPS drawings C-71, M-43, and M-41, Memo CSD 90-226, Letter to NRC 87-074 and 91-48, GE RICSIL 009, and PNPS 8.E.19, *"Fuel Pool and Skimmer Surge Tank Instruments."*

B. *Vent Piping, Code Item No. E4.11 (Visible Surfaces)*

Eight vent pipes from the Drywell elevation 9 ft 2 in. communicate directly with the vent header in the Torus. There is a low point dead leg at the vent pipe to vent header intersection.

It is possible for water to accumulate in the dead legs as a result of workers discharging water into the Torus through the vent. There may also be some water accumulation due to condensation since the Torus is typically cooler than the Drywell. This situation is exacerbated because some drains were eliminated for structural reasons during the Mark I Torus modification project.

Examination of all eight vent pipes is a VT-1. The examination is performed on the external surface and on the internal surface. The zone of examination is the 1 square foot area at the lowest elevation of each vent pipe. Any water or sludge must be pumped out prior to the examination.

Refer to PNPS drawings CIA51-7 and CIA50-5.

C. *Drywell Shell, Code Item No. E4.12 (Surface Area Grid)*

Four-inch strips of polyurethane foam filler were specified in drawings to be left in place between the steel Drywell shell and the

concrete (air gap) during construction. These strips are horizontal and extend continuously around the Drywell. The strips are specified to be separated by a 5 ft 4 in. center-to-center distance. This construction process extended from elevation 9 ft 2 in. to elevation 90 ft 0 in. These strips are possible sites for the retention of water which may be channeled into the air gap from potential leakage sources including the refuel, spent fuel, and equipment pools.

Initial augmented inspections determined the refuel and equipment pools have not had leakage resulting in Drywell shell corrosion losses. The Spent Fuel Pool has exhibited past leakage in the drain system. Examination for this possible corrosion condition will be by ultrasonic thickness measurement of the Drywell shell from the platform at elevation 72 feet. The potential exists for leakage from the bottom of the fuel pool so two strips 6 feet long by 3 inches wide will be examined from the 72 foot elevation proceeding vertically up. The azimuths selected shall be near the fuel pool. In addition to examining for minimum wall thickness values, areas of wall loss from the nominal values will be reported and evaluated. Examinations will be performed every 10 years (Reference QC Inspection Report IR 02-0400).

Refer to PNPS drawings C-118, C-119, M-44, C-112, C-171, C-173 through C-178, M-23, M-413, and M-414.

D. *Torus Shell, Code Item No. E4.12 (Surface Area Grid)*

The Torus shell interior, downcomers, and vent header were coated with Carbo-Zinc in 1981. Recently, an inspection/coating repair program has been implemented in the Torus due to coating failures. This existing program will continue and additional ultrasonic thickness measurements will be performed to monitor wall thickness.

The highest concentration of visually reported corrosion is in the lower section of the immersed portions of the Torus surface. Ultrasonic thickness measurements will be made at four 1 square foot locations centered 6 feet above the Torus Room floor and the furthermost from the Reactor Vessel centerline. Bays 1, 5, 9, and 13 are selected for this sample. Also a 1 square foot section centered on the mean water level (-2 ft 7 in. elevation) will be examined on the same bays. In addition to examining for minimum wall thickness values, any areas of wall loss from the nominal shall be reported and evaluated. These examinations shall be completed each period.

Refer to PNPS drawing C-151.

E. *Refuel Floor Liner Drains, Code Item No. E4.11 (Visible Surfaces)*

Liner drains for water reservoirs on the refuel floor (e.g., Spent Fuel Pool, Dryer/Separator Pool, and Reactor Cavity) may act as precursors for water leaks which could wet the Drywell shell exterior surface. The drain lines exit to Chemical Radwaste by separate and open drains on elevation 74 feet in the Reactor Building. These drains will be examined for leakage once each period and the results reported to PNPS Engineering. Leakage will be evaluated by Engineering and further action specified if warranted.

The drains described below will be examined for leakage after cavity floodup. These examinations will be performed by a VT-2 certified person to the extent possible without removing channeling devices.

(a) Spent Fuel Pool Liner - monitoring trench drains
Ref.: C174, C178, and M413
Drain Location: El. 74' at north wall of Spent Fuel Pool

(b) Dryer Separator Pool Liner - monitoring trench drains
Ref.: C176, C178, and M414
Drain Location: El. 91' at north and south walls of pools

(c) Reactor Cavity
Ref.: C177 and M414

Refer to PNPS drawing ISI-IWE-AUG-2. Refer also to PNPS drawings M-37, M1004 Sheet 86 and Sheet 153, M-3462, M-3496, M-3619, M-3620, M-3623, M-3632, M-3496, C-69, and C-109.

2.4.5 10CFR50.55a IWE Requirements Applicable to Use of the 1998 Edition with 2000 Addenda

By applying the 1998 Edition through the 2000 Addenda of Subsection IWE, PNPS shall also satisfy the requirements of 10CFR50.55a(b)(2)(ix)(A), (b)(2)(ix)(B), and (b)(2)(ix)(F) through (b)(2)(ix)(I).

2.4.5.1 10CFR50.55a(b)(2)(ix)(A)

For Class MC applications, the licensee shall evaluate the acceptability of inaccessible areas when conditions exist in accessible areas that could indicate the presence of or result in degradation to such inaccessible areas. For each inaccessible area identified, the licensee shall provide the following in the ISI Summary Report as required by IWA-6000:

(*1*) A description of the type and estimated extent of degradation, and the conditions that led to the degradation;

(*2*) An evaluation of each area, and the result of the evaluation, and;

(3) A description of necessary corrective actions.

2.4.5.2 10CFR50.55a(b)(2)(ix)(B)

When performing remotely the visual examinations required by Subsection IWE, the maximum direct examination distance specified in Table IWA-2210-1 may be extended and the minimum illumination requirements specified in Table IWA-2210-1 may be decreased provided that the conditions or indications for which the visual examination is performed can be detected at the chosen distance and illumination.

2.4.5.3 10CFR50.55a(b)(2)(ix)(F)

VT-1 and VT-3 examinations must be conducted in accordance with IWA-2200. Personnel conducting examinations in accordance with the VT-1 or VT-3 examination method shall be qualified in accordance with IWA-2300. The "owner-defined" personnel qualification provisions in IWE-2330(a) for personnel that conduct VT-1 and VT-3 examinations are not approved for use.

2.4.5.3 10CFR50.55a(b)(2)(ix)(G)

The VT-3 examination method must be used to conduct the examinations in Items E1.12 and E1.20 of Table IWE-2500-1, and the VT-1 examination method must be used to conduct the examination in Item E4.11 of Table IWE-2500-1. An examination of the pressure-retaining bolted connections in Item E1.11 of Table IWE-2500-1 using the VT-3 examination method must be conducted once each interval. The "owner-defined" visual examination provisions in IWE-2310(a) are not approved for use for VT-1 and VT-3 examinations.

2.4.5.4 10CFR50.55a(b)(2)(ix)(H)

Containment bolted connections that are disassembled during the scheduled performance of the examinations in Item E1.11 of Table IWE-2500-1 must be examined using the VT-3 examination method. Flaws or degradation identified during the performance of a VT-3 examination must be examined in accordance with the VT-1 examination method. The criteria in the material specification or IWB-3517.1 must be used to evaluate containment bolting flaws or degradation. As an alternative to performing VT-3 examinations of containment bolted connections that are disassembled during the scheduled performance of Item E1.11, VT-3 examinations of containment bolted connections may be conducted whenever containment bolted connections are disassembled for any reason.

2.4.5.5 10CFR50.55a(b)(2)(ix)(I)

10CFR50.55a(b)(2)(ix)(I) requires that the ultrasonic examination acceptance standard specified in IWE-3511.3 for Class MC pressure-retaining components must also be applied to metallic liners of Class CC pressure-retaining components. However, PNPS does not have any Class CC pressure-retaining components, and therefore, this requirement is not applicable.

2.5 CLASS 1, 2, 3, AND MC COMPONENT SUPPORTS (IWF)

2.5.1 Component Supports Subject to Examination and Test (IWF-1210)

The component supports subject to examination and testing are all ASME Code Class 1, 2, 3, and MC piping supports and all supports other than piping supports.

The Snubber Inservice Inspection Requirements of Article IWF-5000 are discussed in Section 1.5.2.2 of this Inservice Inspection Plan.

2.5.2 Components Exempt from Examination (IWF-1230)

Component supports exempt from the examination requirements of IWF-2000 are those connected to piping and other items exempted from volumetric, surface, or VT-1 or VT-3 visual examination by IWB-1220, IWC-1220, IWD-1220, and IWE-1220. In addition, portions of supports that are inaccessible by being encased in concrete, buried underground, or encapsulated by guard pipe are also exempt from the examination requirements of IWF-2000.

2.5.3 IWF Component Support Examination Development

Class 1, 2, 3, & MC component supports subject to examination are identified in Section 4.0. A narrative discussion of IWF supports subject to examination and testing is described in below:

2.5.3.1 Examination Category F-A, Supports

- **Item No. F1.10: Class 1 Piping Supports[1]**
- **Item No. F1.10(S): Class 1 Snubber Attachments[2]**
- **Item No. F1.20: Class 2 Piping Supports[1]**
- **Item No. F1.20(S): Class 2 Snubber Attachments[2]**
- **Item No. F1.30: Class 3 Piping Supports[1]**
- **Item No. F1.30(S): Class 3 Snubber Attachments[2]**
- **Item No. F1.40: Supports Other Than Piping Supports (Class 1, 2, 3, and MC)**

[1] Item numbers are categorized with a letter suffix to identify support types by component support function, to the extent practical, e.g.,:

A = Supports such as one directional rod hangers;
B = Supports such as multi-directional restraints; and
C = Supports that allow thermal movement, such as springs.

In cases where one or more of the above suffixes could be applied to a particular support design, only one suffix was selected.

[2] PNPS-specific item numbers to reflect inspection of attachment components separate from snubber pin-to-pin inspections. See Section 1.5.2.2.

- Examination Requirements / Fig. No.: IWF-1300-1
- Examination Method: Visual.

- Acceptance Standard: IWF-3410
- Extent and Examination:
  - *Item Nos. F1.10 & F1.10(S)*: 25% of Class 1 (approx. 1/3 per period). The total percentage sample shall be comprised of supports from each system (such as Main Steam, Feedwater, or RHR), where the individual sample sizes are proportional to the total number of non-exempt supports of each type and function within each system.
  - *Item No. F1.20 & F.1.20(S)*: 15% of Class 2 (approx. 1/3 per period). The total percentage sample shall be comprised of supports from each system (such as Main Steam, Feedwater, or RHR), where the individual sample sizes are proportional to the total number of non-exempt supports of each type and function within each system.
  - *Item No. F1.30 & F1.30(S)*: 10% of Class (approx. 1/3 per period). The total percentage sample shall be comprised of supports from each system (such as Main Steam, Feedwater, or RHR), where the individual sample sizes are proportional to the total number of non-exempt supports of each type and function within each system.
  - *Item No. F1.40*: 100% of the supports. For multiple components other than piping, within a system of similar design, function, and service, the supports of only one of the multiple components are required to be examined.
- Frequency of Examination: Each inspection interval. To the extent practical, the same supports selected for examination during the first inspection interval shall be examined during each successive inspection interval.

2.6 RISK-INFORMED PIPING EXAMINATIONS (CATEGORY R-A)

2.6.1 General

The Pilgrim Station RI-ISI program was developed in accordance with the EPRI methodology contained in EPRI TR-112657, "Risk-Informed Inservice Inspection Evaluation Procedure" and is limited to ASME Class 1 piping welds in Examination Category B-F and B-J only. See Section 1.5.2.1 of this ISI Plan for further details.

The following applies for all item numbers within Examination Category R-A:

- All examination locations have been identified in accordance with the risk-informed selection process in ASME Code Case N-578-1 Appendix I.
- Paragraph and Figure Numbers refer to the 1998 Edition with 2000 Addenda.
- RI-ISI socket welds shall receive both a VT-2 and PT examination, at a minimum, each refueling outage. PNPS may also elect to perform additional surface and/or volumetric examinations on select socket welds.
- Initially selected examination locations are to be examined in the same sequence as previous inspection intervals, to the extent practical.
- Examination volumes for each degradation mechanism are defined in EPRI TR-112657.

- "Extent" includes 100% of the examination location. When the required examination volume or area cannot be examined due to interference by another component or part geometry, limited examinations shall be evaluated for acceptability. Acceptance of limited examinations or volumes shall not invalidate the results of the risk-informed evaluation. Areas with acceptable limited examinations, and their bases, shall be documented.

2.6.2 Examination Category R-A Component / Piping Examination Development

Note: The Examination Category R-A Item Numbers that follow in this section are included for comprehensiveness purposes only. Not all of the Item Numbers below are applicable to PNPS. See Table 3.1-6 (*Examination Category R-A Components Summary Table*) for total counts by Item Number.

- **Item No. R1.11: More Safety-Significant Piping Structural Elements – *Elements Subject to Thermal Fatigue***

  - Examination Requirements / Fig. No.: IWB-2500-8(c); IWB-2500-9, -10, -11; IWC-2500-7(a).
  - Examination Method: Volumetric.
  - Acceptance Standard: IWB-3514.
  - Extent and Frequency of Examination: Element. Includes all examination locations identified in accordance with the risk-informed selection process in CC N-578-1 Appendix I. The examination shall include any longitudinal weld at the location selected for examination in accordance with the risk-informed selection process in CC N-578-1 Appendix I. The longitudinal weld examination requirements shall be met for both transverse and parallel flaws examination volume for locations identified in accordance with the risk-informed selection process in CC N-578-1 Appendix I.
  - Deferral to End of Interval: Deferral of inspections to the end of the interval is not permissible.

- **Item No. R1.12: More Safety-Significant Piping Structural Elements – *Elements Subject to High Cycle Mechanical Fatigue***

  - Examination Requirements / Fig. No.: N/A.
  - Examination Method: Visual (VT-2). VT-2 examinations may be conducted during a system pressure test or a pressure test specific to that component/element.
  - Acceptance Standard: IWB-3142.
  - Extent and Frequency of Examination: Each refueling.
  - Deferral to End of Interval: Deferral of inspections to the end of the interval is not permissible.

- **Item No. R1.13: More Safety-Significant Piping Structural Elements – *Elements Subject to Erosion, Cavitation***

  - Examination Requirements / Fig. No.: The examination volume shall include base metal, welds, and weld HAZ in the affected regions of carbon and low alloy steel, and the welds and weld HAZ of austenitic steel. Examinations shall verify the minimum wall thickness required. The examination method and examination region shall be sufficient to characterize the extent of element degradation.

- Examination Method: Volumetric. In accordance with the PNPS FAC Program.
- Acceptance Standard: IWB-3514.
- Extent and Frequency of Examination: Element. Includes all examination locations identified in accordance with the risk-informed selection process in CC N-578-1 Appendix I.
- Deferral to End of Interval: Deferral of inspections to the end of the interval is not permissible.

- **Item No. R1.14: More Safety-Significant Piping Structural Elements – *Elements Subject to Crevice Corrosion Cracking***

  - Examination Requirements / Fig. No.: The examination volume shall include the volume surrounding the weld, weld heat affected zone, and base metal, where applicable, in the crevice region. Examination should focus on detection of cracks initiating and propagating from the inner surface.
  - Examination Method: Volumetric.
  - Acceptance Standard: IWB-3514.
  - Extent and Frequency of Examination: Element. Includes all examination locations identified in accordance with the risk-informed selection process in CC N-578-1 Appendix I.
  - Deferral to End of Interval: Deferral of inspections to the end of the interval is not permissible.

- **Item No. R1.15: More Safety-Significant Piping Structural Elements – *Elements Subject to Primary Water Stress Corrosion Cracking (PWSCC)***

  Note: Item No. R1.15 is not applicable to Pilgrim.

  - Examination Requirements / Fig. No.: N/A. Applies to mill annealed Alloy 600 nozzle welds and heat-affected zone (HAZ) without stress relief.
  - Examination Method: Visual (VT-2). VT-2 examinations may be conducted during a system pressure test or a pressure test specific to that component/element.
  - Acceptance Standard: IWB-3142.
  - Extent and Frequency of Examination: Each refueling.
  - Deferral to End of Interval: Deferral of inspections to the end of the interval is not permissible.

- **Item No. R1.16: More Safety-Significant Piping Structural Elements – *Elements Subject to Intergranular or Transgranular Stress Corrosion Cracking (IGSCC, TGSCC)***

  - Examination Requirements / Fig. No.: IWB-2500-8(c); IWB-2500-9, -10, -11.
  - Examination Method: Volumetric.
  - Acceptance Standard: IWB-3514.
  - Extent and Frequency of Examination: Element. Includes all examination locations identified in accordance with the risk-informed selection process in CC N-578-1 Appendix I.
  - Deferral to End of Interval: Deferral of inspections to the end of the interval is not permissible.

- **Item No. R1.17: More Safety-Significant Piping Structural Elements – *Elements Subject to Localized Corrosion (MIC or Pitting)***

  - Examination Requirements / Fig. No.: IWB-2500-8(c); IWB-2500-9, -10, -11.
  - Examination Method: Visual (VT-3) Internal Surfaces, or Volumetric. The examination volume shall include base metal, welds, and weld HAZ in the affected regions of carbon and low alloy steel, and the welds and weld HAZ of austenitic steel. Examinations shall verify the minimum wall thickness required. The examination method and examination region shall be sufficient to characterize the extent of element degradation.
  - Acceptance Standard: The examination volume shall include base metal, welds, and weld HAZ in the affected regions of carbon and low alloy steel, and the welds and weld HAZ of austenitic steel. Examinations shall verify the minimum wall thickness required. The examination method and examination region shall be sufficient to characterize the extent of element degradation.
  - Extent and Frequency of Examination: Element. Includes all examination locations identified in accordance with the risk-informed selection process in CC N-578-1 Appendix I.
  - Deferral to End of Interval: Deferral of inspections to the end of the interval is not permissible.

- **Item No. R1.18: More Safety-Significant Piping Structural Elements – *Elements Subject to Flow Accelerated Corrosion (FAC)***

  - Examination Requirements / Fig. No.: In accordance with the PNPS FAC Program (Specification M577).
  - Examination Method: In accordance with the PNPS FAC Program (Specification M577).
  - Acceptance Standard: In accordance with the PNPS FAC Program (Specification M577).
  - Extent and Frequency of Examination: In accordance with the PNPS FAC Program (Specification M577).
  - Deferral to End of Interval: In accordance with the PNPS FAC Program (Specification M577).

- **Item No. R1.19: More Safety-Significant Piping Structural Elements – *Elements Subject to External Chloride Stress Corrosion Cracking (ECSCC)***

  - Examination Requirements / Fig. No.: IWB-2500-8(c).
  - Examination Method: Surface.
  - Acceptance Standard: IWB-3514.
  - Extent and Frequency of Examination: Element. Includes all examination locations identified in accordance with the risk-informed selection process in CC N-578-1 Appendix I.
  - Deferral to End of Interval: Deferral of inspections to the end of the interval is not permissible.

- **Item No. R1.20: More Safety-Significant Piping Structural Elements – *Elements Not Subject to a Damage Mechanism***

  - Examination Requirements / Fig. No.: IWB-2500-8(c); IWB-2500-9, -10, -11; IWC-2500-7(a).
  - Examination Method: Volumetric.
  - Acceptance Standard: IWB-3514.
  - Extent and Frequency of Examination: Element. Includes all examination locations identified in accordance with the risk-informed selection process in CC N-578-1 Appendix I. The examination shall include any longitudinal weld at the location selected for examination in accordance with the risk-informed selection process in CC N-578-1 Appendix I. The longitudinal weld examination requirements shall be met for both transverse and parallel flaws examination volume for locations identified in accordance with the risk-informed selection process in CC N-578-1 Appendix I.
  - Deferral to End of Interval: Deferral of inspections to the end of the interval is not permissible.

SECTION 3.0

CODE COMPLIANCE INSERVICE INSPECTION PROGRAM SUMMARY

3.0 CODE COMPLIANCE INSERVICE INSPECTION PROGRAM SUMMARY

3.1 ASME Section XI Inservice Inspection Component Summary Tables

The Tables in this Section provide a summary of the PNPS Fourth Ten-Year Interval ISI Program by listing all items subject to inservice inspection during the Interval. These Tables will be maintained in an updated condition throughout the Interval.

- Tables 3.1-1 through 3.1-5 respectively, provide a summary listing of all ISI components sorted by ISI Class (Code Subsection), i.e., IWB, IWC, IWD, IWE, and IWF.
- Table 3.1-6 provides a summary listing of ISI components for Examination Category R-A (Risk-Informed).
- Table 3.1-7 provides a summary of Class I Pressure Boundary Only (PBO) components subject to augmented examinations.

ASME SECTION XI INSERVICE INSPECTION COMPONENT SUMMARY TABLES	
Table 3.1-1	ISI Class 1 Components (IWB) Summary Table
Table 3.1-2	ISI Class 2 Components (IWC) Summary Table
Table 3.1-3	ISI Class 3 Components (IWD) Summary Table
Table 3.1-4	ISI Class MC Components (IWE) Summary Table
Table 3.1-5	ISI Class 1, 2, 3, and MC Component Supports (IWF) Summary Table
Table 3.1-6	Examination Category R-A Components Summary Table
Table 3.1-7	Class I Pressure Boundary Only (PBO) Components Summary Table

These Tables provide the following information:

3.1.1 Examination Category and Description; Item Number and Description

The Examination Category, Exam Item No., and Item Description are as identified in the 1998 Edition of ASME Section XI with the 2000 Addenda, Tables IWB-2500-1, IWC-2500-1, IWD-2500-1, IWE-2500-1, and IWF-2500-1.

Not all Examination Category Item Numbers are listed in the Tables of Section 3.0. For example, Item Numbers clearly associated with components not applicable to the Pilgrim plant design are not included. Total counts for these items are zero. For example:

- Examination Category B-B Item No. B2.11: *Pressurizer Circumferential Shell-to-Head Welds*
- Examination Category B-D Item No. B3.140: *Steam Generator Nozzle Inside Radius Section*

In other cases, Examination Category Item Numbers with total counts of zero are listed. This convention is used for those Item Numbers where it is not intuitively obvious that the Pilgrim design does not include this type of component. For example:

- Examination Category C-F-1 Item No. C5.30: *Socket Welds in Austenitic Stainless Steel or High Alloy Piping*

Section 2.0 of this ISI Program Plan contains a comprehensive narrative summary of all 1998 Section XI Examination Categories and Item Numbers. It may be referred to for further information regarding whether or not a specific Examination Category and/or Item Number applies to the Pilgrim plant design.

In Table 3.1-6 for Examination Category R-A, the examination category and item numbers are as identified in ASME Section XI Code Case N-578-1. Examination Category R-A Parts Examined provides a description of the elements to be examined, which are classified by their potential degradation mechanism.

3.1.2 Exam Method

This column lists the examination method(s) required by ASME Section XI, Tables IWB-2500-1, IWC-2500-1, IWD-2500-1, IWE-2500-1, and IWF-2500-1. For Examination Category R-A, this column lists the examination method(s) required by EPRI Topical Report No. TR-112657.

3.1.3 System

The components in the Tables of this Section are sorted alphabetically by plant system abbreviation. Each plant system is further sorted by ISI drawing number and line number. The system acronyms (abbreviations) used are as follows:

SYSTEM ABBREVIATION	PNPS SYSTEM
CACS	Containment Atmosphere Control System
CONT	Containment (Primary)
CRD	Control Rod Drive Hydraulic
CS	Core Spray
FW	Feedwater
HPCI	High Pressure Coolant Injection
IA	Instrument Air
MS	Main Steam
PASS	Post-Accident Sampling and Primary Containment Monitoring
RBCCW	Reactor Building Closed Cooling Water
RCIC	Reactor Core Isolation Cooling
RECIRC	Reactor Recirculation System
RHR	Residual Heat Removal
RPV	Reactor Pressure Vessel
RWCU	Reactor Water Cleanup
SBLC	Standby Liquid Control
SSW	Salt Service Water

3.1.4 Line or Component ID

The components are sorted by the specific pipeline number as identified on the ISI drawings listed in Appendix E.

3.1.5 ISO No.

This column in each Table refers to the ISI piping isometric drawings listed in Appendix E.

3.1.6 No. Items

Provides the total count of components for each Item Number and each line number. This column lists the total population of components potentially subject to examination.

3.1.7 No. Scheduled

Provides the total count of components that will be actually examined during the inspection interval, based upon the Code requirements for the subject item number.

3.1.8 Period Count

Provides the count required to meet the period requirements along with the percentage for that particular code category. Fourth Interval Inservice Inspections are performed in accordance with Inspection Program B as outlined in IWA-2432, IWB-2412, IWC-2412, IWD-2412, IWE-2412, and IWF-2410 of ASME Section XI:

Inspection Period	Minimum Examinations Completed, %	Maximum Examinations Credited, %
1	16	50
2	50*	75
3	100	100

* If the first period completion percentage for any examination category exceeds 34%, at least 16% of the required examinations shall be performed in the second period.

There are three ISI Periods for the PNPS Fourth Ten-Year Interval. The First and Third Periods contain two (2) Refueling Outages each. The Second Period contains one (1) Refueling Outage:

Period 1 (July 1, 2005 to June 30, 2009)
Refueling Outage RFO-16 (Spring 2007)
Refueling Outage RFO-17 (Spring 2009)

Period 2 (July 1, 2009 to June 30, 2012)
Refueling Outage RFO-18 (Spring 2011)

Period 3 (July 1, 2012 to June 30, 2015)
Refueling Outage RFO-19 (Spring 2013)
Refueling Outage RFO-20 (Spring 2015)

It should be noted that the plant's current (original) operating license (DPR-35) will expire on June 8, 2012. This date falls within the 4th Interval.

Pilgrim's 4th Interval Inspection Periods are based on a twenty-four (24) month fuel cycle. The component schedule identifiers show when an item was examined or is scheduled to be examined. Any interval can be shown separately.

X – Scheduled for the particular Period (1 = 1st Period; 2 = 2nd Period; 3 = 3rd Period)	P — Partial (less than 90% weld volume coverage achieved)
C – Completed	E – Expanded Scope
A – Augmented	B – Baseline
R – Re-examined	RR – Re-examination Required, i.e., IWB-2420(b)

3.1.9 Relief Request

This column identifies whether a Relief Request applies for the Item Number. A "Y" designates a Relief Request applies to the item number, and "-" or no entry designates that no Relief Request is applicable to the Item Number. If a Relief Request is identified, see the corresponding Relief Request in Appendix B for further details.

3.1.10 Remarks / Comments

This column provides a listing of notes, Code Cases, and/or Relief Requests applicable to the ASME Section XI Item Number and/or Category. For references to Code Cases and Relief Requests, see Section 1.0 and Appendices A & B.

3.2 Elements Selected and Scheduled for Examination per the Risk-Informed Inservice Inspection Application on Class 1 Piping Welds

Table 3.1-6 includes the welds that are scheduled for examination in the 4th Ten-Year Inservice Inspection Interval per the Risk-Informed application on Class 1 piping welds. Risk-Based ISI inspections started in RFO-13 (Spring 2001) for Category B-J & B-F carbon steel and IGSCC Category A welds. Sixty-six (66%) of the RI-ISI Program inspections were completed by the end of the 3rd Ten-Year ISI Interval, with the remaining third (100% of the original RI-ISI Program welds) scheduled to be completed by the end of the 1st Period of the 4th Ten-Year ISI Interval. The original RI-ISI Program inspection schedule will then be resumed in the 2nd Period of the 4th Ten-Year ISI Interval by continuing with the same component selection and schedule from the 2nd Period of the First Ten-Year RI-ISI Interval. The 3rd Period of the 4th Ten-Year ISI Interval will likewise continue with the same component selection and schedule from the 3rd Period of the First Ten-Year RI-ISI Interval.

Exam Item	Item Description	Exam Method	System	Line or Component ID	ISO No.	No. Items	No. Sch'd	INSPECTION PERIODS 1ST	Stat.	2ND	Stat.	3RD	Stat.	Rel Req	Remarks/ Comments
EXAMINATION CATEGORY B-A, PRESSURE RETAINING WELDS IN REACTOR VESSEL															
B1.11	Circumferential Shell Welds	Vol	RPV	RPV	ISI-I-54-1	4	0	0		0		0			PRR-6; PRR-28
			Total Examination Item B1.11			4	0	0		0		0			
								0%		0%		0%			
B1.12	Longitudinal Shell Welds	Vol	RPV	RPV	ISI-I-54-1	12	12	0		0		12			PRR-6
			Total Examination Item B1.12			12	12	0		0		12			
								0%		0%		100%			
B1.21	Circumferential Head Welds	Vol	RPV	RPV	ISI-I-54-3	3	3	0		0		3			PRR-6
			Total Examination Item B1.21			3	3	0		0		3			
								0%		0%		100%			
B1.22	Meridional Head Welds	Vol	RPV	N/A	ISI-I-54-2	8	8	3		0		5			PRR-6
			RPV		ISI-I-54-3	14	14	0		0		14			PRR-6
			Total Examination Item B1.22			22	22	3		0		19			
								14%		14%		100%			
B1.30	Shell-to-Flange Weld	Vol	RPV	RPV	ISI-I-54-1	1	1	0		0		1			PRR-11 & 12
			Total Examination Item B1.30			1	1	0		0		1			
								0%		0%		100%			
B1.40	Head-to-Flange Weld	Vol/Surf	RPV	RPV	ISI-I-54-2	1	1	0.5		0		0.5			
			Total Examination Item B1.40			1	1	0.5		0		0.5			
								50%		50%		100%			
B1.51	Beltline Region Repair Welds	Vol	RPV	RPV	ISI-I-54-1	0	0	0		0		0			
			Total Examination Item B1.51			0	0	0		0		0			
								0%		0%		0%			
			Total Examination Category B-A			43	39	3.5		0		35.5			
								9%		9%		100%			

Notes for Examination Category B-A:

(1) Material (base metal) weld repairs where repair depth exceeds 10% nominal of the vessel wall. If the location of the repair is not positively and accurately known, then the individual shell plate, forging, or shell course containing the repair shall be included.

(2) Includes essentially 100% of the weld length.

(3) When using Inspection Program B, the shell-to-flange weld examination may be performed during thr first and third periods, in which case 50% of the shell-to-flange weld shall be examined by the end of the first period, and the remainder by the end of the thrid period. During the first period, the examination need only be performed from the flange face, provided this same portion is examined from the shell during the third period.

(4) Deferral is not permissible for the head-to-flange weld. However, during the first and second periods, the examination need only be performed from the flange face, provided these same portions are examined from the head during the third period.

(5) Relief Request PRR-7 applies to all Code Item Number and regards the Repair/Replacement Welding Program in accordance with ASME Section XI, Sub Article IWA-4150.

Exam Item	Item Description	Exam Method	System	Line or Component ID	ISO No.	No. Items	No. Sch'd	INSPECTION PERIODS 1ST	Stat.	2ND	Stat.	3RD	Stat.	Rel Req	Remarks/ Comments
Examination Category: B-D, FULL PENETRATION WELDED NOZZLES IN VESSELS - INSPECTION PROGRAM B															
B3.90-[13]	Reactor Vessel - Nozzle-to-Vessel Welds	Vol	RPV	01 Closure Head	ISI-I-54-2	3	3	0		0		3			PRR-13
				02-2, 28" RC	ISI-I-54-1	2	2	0		1		1			
				02-2, 12" RC	ISI-I-54-1	10	10	0		3		7			
				02-3, 4" JP	ISI-I-54-1	2	2	0		1		1			
				03, 3" CRD	ISI-I-54-1	1	1	0		1		0			
				14, 10" CS	ISI-I-54-1	2	2	1		1		0			
				29, 24" MS	ISI-I-54-1	4	4	4		0		0			
				6, 12" FW	ISI-I-54-1	4	4	0		2		2			
			Total Examination Item B3.90			28	28	5		9		14			
								18%		50%		100%			
B3.100-[1]	Reactor Vessel - Nozzle Inside Radius Section	Vol	RPV	01 Closure Head	ISI-I-54-2	3	3	0		0		3			PRR-13
				02-2, 28" RC	ISI-I-54-1	2	2	0		1		1			Code Case N552 used for inner radius modeling
				02-2, 12" RC	ISI-I-54-1	10	10	0		3		7			
				02-3, 4" JP	ISI-I-54-1	2	2	0		1		1			
				03, 3" CRD	ISI-I-54-1	1	1	0		1		0			
				14, 10" CS	ISI-I-54-1	2	2	1		1		0			
				29, 20" MS	ISI-I-54-1	4	4	4		0		0			
				6, 12" FW	ISI-I-54-1	4	4	0		2		2			
			Total Examination Item B3.100			28	28	5		9		14			
								18%		50%		100%			
			Total Examination Category B-D			56	56	10		18		28			
								18%		50%		100%			

Notes for Examiantion Category B-D:

(1) Includes nozzles with full penetration welds to vessel shell (or head) and integrally cast nozzles, but excludes manway and hand holds either welded to or integrally cast in vessel.

(2) Deferral is permissible during the first and second intervals during the third and fourth intervals at least 25% but not more than 50% of the nozzles shall be examined by the end of the second period, and the remainder by the end of the interval.

(3) During the third and fourth intervals, if the nozzle weld is examined by straight beam ultrasonic method from inside the nozzle bore, the remaining examinations required to be conducted from the shell inside diameter may be performed at or near the end of the inspection interval.

(4) The examination volume shall apply to the applicable figure shown in Figs. IWB-2500-7(a) through (d).

(5) Relief Request PRR-7 applies to all Code Item Number and regards the Repair/Replacement Welding Program in accordance with ASME Section XI, Sub Article IWA-4150.

Exam Item	Item Description	Exam Method	System	Line or Component ID	ISO No.	No. Items	No. Sch'd	INSPECTION PERIODS 1ST	Stat.	2ND	Stat.	3RD	Stat.	Rel Req	Remarks/ Comments
Examination Category: B-F, PRESSURE RETAINING DISSIMILAR METAL WELDS															
[Historical Reference Purposes Only - See Exam. Category R-A for Period Selections]															
B5.10 [1,2,3,4]	NPS 4 or Larger Nozzle-to-Safe End Butt Welds														PRR-5; PRR-10; PRR-15
		Vol/Surf[4]	RECIRC	28-DCA-2	ISI-I-2R-A	1	0	0		0		0			
				28-DCA-2	ISI-I-2R-B	1	0	0		0		0			
			Total 28"			2	0	0		0		0			
		Vol/Surf[4]	RECIRC	12-DCA-2	ISI-I-2R-A	5	0	0		0		0			
				12-DCA-2	ISI-I-2R-B	5	0	0		0		0			
			Total 12"			10	0	0		0		0			
			Total RECIRC System			12	0	0		0		0			
		Vol/Surf[4]	RPV	N8A	-	1	0	0		0		0			
				N8B	-	1	0	0		0		0			
			Total RPV			2	0	0		0		0			
			Total Examination Item B5.10			14	0	0		0		0			

Exam Item	Item Description	Exam Method	System	Line or Component ID	ISO No.	No. Items	No. Sch'd	INSPECTION PERIODS 1ST	Stat.	2ND	Stat.	3RD	Stat.	Rel Req	Remarks/ Comments
Examination Category: B-F, PRESSURE RETAINING DISSIMILAR METAL WELDS															
[Historical Reference Purposes Only - See Exam. Category R-A for Period Selections]															
B5.20-[1,2,3,4]	Less than NPS 4 Nozzle-to-Safe End Welds	Surf[4]	N/A	N/A	N/A	0	0	0		0		0			PRR-5 & PRR-10
			Total Examination Item B5.20			0	0	0		0		0			
B5.30-[1,2,3,4]	Nozzle-to-Safe End Socket Welds	Surf[4]	N/A	N/A	N/A	0	0	0		0		0			PRR-5 & PRR-10
			Total Examination Item B5.30			0	0	0		0		0			
			Total Examination Category B-F			14	0	0		0		0			

Notes for Examination Category B-F:

(1) Deferral is not permissible during the first interval. However, during successive intervals, the examinations may be performed conicident with the vessel nozzle examinations required by Examination Category B-D.

(2) For PWRs in the second and successive inspection intervals, these examinations may be deferred to the end of the interval, provided no repair/replacement activities have been performed on the examination item, and no flaws or relevant conditions requiring successive inspections in accordance with IWB-2420 (b) are contained in the examination item.

(3) Relief Request PRR-7 applies to all Code Item Number and regards the Repair/Replacement Welding Program in accordance with ASME Section XI, Sub Article IWA-4150.

(4) In 2001, the Pilgrim Nuclear Power Station implemented a risk-informed inservice inspection program for Class 1 piping welds (i.e., Examination Categories B-F and B-J). As part of this application, the Class 1 circumferential piping welds were assigned alternate Examination Category and Code Item Numbers that were consistent with ASME Section XI Code Case N-578-1. The alternate risk-informed Examination Category is R-A and the Code Item Numbers are R1.11 though R1.20, inclusive and are also shown in this Table. Note that the total number of Class 1 circumferential piping welds in the ISI Program remained unchanged. Only the designations have been changed to reflect the Examination Category and Code Item Numbers established in Code Case N-578-1. See Sections 1.5.7 and 2.6 of this ISI Program Plan for further information.

Exam Item	Item Description	Exam Method	System	Line or Component ID	ISO No.	No. Items	No. Sch'd	INSPECTION PERIODS 1ST	Stat.	2ND	Stat.	3RD	Stat.	Rel Req	Remarks/ Comments
Examination Category: B-G-1, PRESSURE RETAINING BOLTING GREATER THAN 2" IN DIAMETER[1,2,3,4,5,6,7,8,9]															
B6.10	RPV - Closure Head Nuts	VT-1	RPV	Closure Head	ISI-I-54-2	56	56	18		18		20			
			Total Examination Item B6.10			56	56	18		18		20			
B6.20 - [9]	RPV - Closure Studs, in place	Vol	RPV	Closure Head	ISI-I-54-2	56	56	18		18		20			
			Total Examination Item B6.20			56	56	18		18		20			
B6.30 - [9]	RPV - Closure Studs, when removed	Vol/Surf	RPV	Closure Head	ISI-I-54-2	4	4	0		0		4			
			Total Examination Item B6.30			4	4	0		0		4			
B6.40	RPV - Threads in Flange	Vol	RPV	Closure Head	ISI-I-54-2	56	56	18		18		20			
			Total Examination Item B6.40			56	56	18		18		20			
B6.50	RPV - Closure Washers, Bushings	VT-1	RPV	Closure Head	ISI-I-54-2	56	56	18		18		20			
			Total Examination Item B6.50			56	56	18		18		20			
B6.180	Pumps - Bolts and Studs	Vol	RECIRC	PUMP BOLTING	ISI-I-2R-A	1	1	0		1		0			When disassembled; PRR-14 (CC N-652)
		Vol	RECIRC	PUMP BOLTING	ISI-I-2R-B	1	0	0		0		0			
			Total Examination Item B6.180			2	1	0		1		0			
B6.190	Pumps - Flange Surface, when connection disassembled	VT-1	RECIRC	PUMP FLANGE SURFACE	ISI-I-2R-A	1	1	1		0		0			When disassembled; PRR-14 (CC N-652)
		VT-1	RECIRC	PUMP FLANGE SURFACE	ISI-I-2R-B	1	0	0		0		0			
			Total Examination Item B6.190			2	1	1		0		0			
B6.200	Pumps - Nuts, Bushings and Washers	VT-1	RECIRC	Pump Nuts	ISI-I-2R-A	1	0	0		0		0			When disassembled; PRR-14 (CC N-652)
		VT-1	RECIRC	Pump Nuts	ISI-I-2R-B	1	0	0		0		0			
			Total Examination Item B6.200			2	0	0		0		0			
			Total Examination Category B-G-1			234	230	73 32%		73 63%		84 100%			

Exam Item	Item Description	Exam Method	System	Line or Component ID	ISO No.	No. Items	No. Sch'd	INSPECTION PERIODS 1ST	Stat.	2ND	Stat.	3RD	Stat.	Rel Req	Remarks/ Comments

Examination Category: B-G-1, PRESSURE RETAINING BOLTING GREATER THAN 2" IN DIAMETER[1,2,3,4,5,6,7,8,9]

Notes for Examination Category B-G-1:

(1) Bolting may be examined (per ASME CC N-652):
(a) in place under tension;
(b) when the connection is disassembled;
(c) when the bolting is removed.

(2) When bolts or studs are removed for examination, surface examination meeting the acceptance standards of IWB-3515 may be substituted for volumetric examination (per ASME CC N-652).

(3) Bushings and threads in base material of flanges are required to be examined only when the connections are disassembled. Bushings may be inspected in place (per ASME CC N-652).

(4) Volumetric examination of bolting for heat exchangers, pumps, or valves may be conducted on one heat exchanger, one pump, or one valve among a group of heat exchangers, pumps, or valves that are similar in design, type, and function. In addition, when the component to be examined contains a group of bolted connections of similar design and size, such as flanged connections, the examination may be conducted on one bolted connection among the group (per ASME

(5) Visual examination of bolting for heat exchangers, pumps, or valves is required only when the component is examined under Examination Category B-B, B-L-2, or B-M-2. Examination of a bolted connection is required only once during the interval (per ASME CC N-652).

(6) The examination of flange bolting in piping systems may be limited to one bolted connection among a group of bolted connections that are similar in design, size, function, and service (per ASME CC N-652).

(7) Examination includes 1 in. annular surface of flange surrounding each stud (per ASME CC N-652).

(8) Relief Request PRR-7 applies to all Code Item Number and regards the Repair/Replacement Welding Program in accordance with ASME Section XI, Sub Article IWA-4150.

(9) Item No. B6.30 (Closure Studs, when removed) is not included in ASME Code Case N-652 as a stand-alone item. Closure Studs are Item No. B6.20 in Code Case N-652.

Exam Item	Item Description	Exam Method	System	Line or Component ID	ISO No.	No. Items	No. Sch'd	INSPECTION PERIODS 1ST Stat.	2ND Stat.	3RD Stat.	Rel Req	Remarks/ Comments
Examination Category: B-G-2, PRESSURE RETAINING BOLTING, 2" AND LESS IN DIAMETER												
B7.10	Reactor Vessel - Bolts, Studs and Nuts	VT-1	RPV	Flange Bolting	ISI-I-54-2	3	3	3	0	0		PRR-14, see notes
			Total Examination Item B7.10			3	3	3	0	0		
								100%	100%	100%		
B7.50	Piping - Bolts, Studs and Nuts	VT-1	RECIRC	4-DCA-2	ISI-I-2R-A	2	2	0	1	1		PRR-14, see notes
		VT-1	RECIRC	4-DCA-2	ISI-I-2R-B	2	0	0	0	0		PRR-14, see notes
			Total Examination Item B7.50			4	2	0	1	1		
								0%	50%	100%		
B7.70	Valves - Bolts, Studs and Nuts											
		VT-1	RPV	N/A	N/A	0	0	0	0	0		
				N/A	N/A	0	0	0	0	0		
			Total RPV Valves			0	0	0	0	0		
		VT-1	RECIRC	2-DCA-2	ISI-I-2R-A	2	1	0	0	1		PRR-14, see notes
				2-DCA-2	ISI-I-2R-B	2	1	0	0	1		PRR-14, see notes
				28-DCA-2	ISI-I-2R-A	2	2	1	0	1		PRR-14, see notes
				28-DCA-2	ISI-I-2R-B	2	2	0	1	1		PRR-14, see notes
			Total RC Valves			8	6	1	1	4		
		VT-1	RHR	18-DC-10	ISI-I-10-1	2	2	2	0	0		
				18-DC-10	N/A	1	1	1	0	0		PRR-14, see notes
				18-DCA-10	ISI-I-10-1	4	4	0	2	2		PRR-14, see notes
				20-DCA-10	ISI-I-10-1A	2	2	0	2	0		PRR-14, see notes
				20-EL-10	ISI-I-10-1A	1	1	0	1	0		PRR-14, see notes
			Total RHR Valves			10	10	3	5	2		
		VT-1	RWCU	6-DCA-12	ISI-I-12-1SH1	2	2	1	1	0		PRR-14, see notes
				2-DB-4	ISI-I-12-1SH2	2	2	0	0	2		PRR-14, see notes
				6-EA-12	ISI-I-12-1SH1	1	1	0	1	0		PRR-14, see notes
				4-DA-12	ISI-I-12-2	1	1	0	0	1		PRR-14, see notes
				6-DL-6	ISI-I-12-2	2	2	0	2	0		PRR-14, see notes
			Total RWCU Valves			8	8	1	4	3		

Exam Item	Item Description	Exam Method	System	Line or Component ID	ISO No.	No. Items	No. Sch'd	INSPECTION PERIODS 1ST	Stat.	2ND	Stat.	3RD	Stat.	Rel Req	Remarks/ Comments
Examination Category: B-G-2, PRESSURE RETAINING BOLTING, 2" AND LESS IN DIAMETER															
B7.70		VT-1	RCIC	3-EB-13	ISI-I-13-1	2	2	0		1		1			PRR-14, see notes
				4-DB-13	ISI-I-13-1	2	2	0		2		0			PRR-14, see notes
			Total RCIC Valves			4	4	0		3		1			
		VT-1	CS	10-DCA-14	ISI-I-14-1	3	3	0		0		3			PRR-14, see notes
				10-DC-14	ISI-I-14-1	3	3	0		2		1			PRR-14, see notes
			Total CS Valves			6	6	0		2		4			
		VT-1	HPCI	10-EB-23	ISI-I-23-1	2	2	1		0		1			PRR-14, see notes
				14-DL-6	ISI-I-23-1	1	1	0		0		1			PRR-14, see notes
				14-DB-23	ISI-I-23-1	1	1	0		0		1			PRR-14, see notes
			Total HPCI Valves			4	4	1		0		3			
		VT-1	MS	6-EB-1	ISI-I-1-1SH1	6	6	0		6		0			PRR-14, see notes
				3-EL-1	ISI I 1-1SH 2	2	2	0		2		0			PRR-14, see notes
				20-EB-1	ISI I 1-1 SH 2	8	8	6		2		0			PRR-14, see notes
			Total MS Valves			16	16	6		10		0			
		VT-1	SBLC	1 1/2-DC-11	ISI-I-11-1	3	3	1		2		0			PRR-14, see notes
			Total SBLC Valves			3	3	1		2		0			
		VT-1	FW	FW-18-DL-6	ISI-I-6-1	4	4	2		0		2			PRR-14, see notes
				FW-18-DL-6	ISI-I-6-1A	2	2	2		0		0			PRR-14, see notes
			Total FW Valves			6	6	4		0		2			
			Total Examination Item B7.70			65	63	17		27		19			
								27%		70%		100%			
B7.80		VT-1	RPV	N/A	N/A	1	3	1		1		1			CRD bolting, inspected every period.
			Total Examination Item B7.80			1	3	1		1		1			
								33%		67%		100%			

Notes for Examination Category B-G-2:

(1) Bolting is required to be examined only when a connection is disassembled or bolting is removed (per ASME CC N-652).

(2) For vessels, pumps, or valves, examination of bolting is required only when the component is examined under Examination Category B-B, B-L-2, or B-M-2, Examination of a bolted connection is required only once during the interval (per ASME CC N-652).

(3) The examination flange bolting in piping systems may be limited to one bolted connection among a group of bolted connections that are similar in design, size, function, and service. Examination is required only when the flange is diassembled. Examination of a bolted connection is required only once during the interval (per ASME CC N-652).

(4) Relief Request PRR-7 applies to all Code Item Number and regards the Repair/Replacement Welding Program in accordance with ASME Section XI, Sub Article IWA-4150.

Exam Item	Item Description	Exam Method	System	Line or Component ID	ISO No.	No. Items	No. Sch'd	INSPECTION PERIODS 1ST	Stat.	2ND	Stat.	3RD	Stat.	Rel Req	Remarks/ Comments
Examination Category: B-J, PRESSURE RETAINING WELDS IN PIPING															
[Historical Reference Purposes Only - See Exam. Category R-A for Period Selections]															
B9.11-[1,2,3,9]	Circumferential Welds in Piping NPS 4 or Larger	Vol/Surf	RPV	N/A	N/A	0	0	0		0		0			
				N/A	N/A	0	0	0		0		0			
			Total RPV System			0	0	0		0		0			PRR-10
		Vol/Surf	RECIRC	28-DCA-2	ISI-I-2R-A	14	0	0		0		0			
				28-DCA-2	ISI-I-2R-B	14	0	0		0		0			
			Total 28.0"			28	0	0		0		0			
		Vol/Surf	RECIRC	22-DCA-2	ISI-I-2R-A	2	0	0		0		0			
				22-DCA-2	ISI-I-2R-B	2	0	0		0		0			
			Total 22.0"			4	0	0		0		0			
		Vol/Surf	RECIRC	12-DCA-2	ISI-I-2R-A	12	0	0		0		0			
				12-DCA-2	ISI-I-2R-B	12	0	0		0		0			
			Total 12.0"			24	0	0		0		0			
			Total RECIRC System			56	0	0		0		0			

Exam Item	Item Description	Exam Method	System	Line or Component ID	ISO No.	No. Items	No. Sch'd	INSPECTION PERIODS 1ST Stat.	2ND Stat.	3RD Stat.	Rel Req	Remarks/ Comments
Examination Category: B-J, PRESSURE RETAINING WELDS IN PIPING												
[Historical Reference Purposes Only - See Exam. Category R-A for Period Selections]												
B9.11-[1,2,3,5]	Circumferential Welds in Piping NPS 4 or Larger	Vol/Surf	RHR	18-DC-10	ISI-I-10-1	4	0	0	0	0		
				18-DCA-10	ISI-I-10-1	24	0	0	0	0		
				18-DC/DCA-10	ISI-I-10-1	4	0	0	0	0		
			Total 18.0"			32	0	0	0	0		PRR-10
		Vol/Surf	RHR	20-DCA-10	ISI-I-10-1A	12	0	0	0	0		
				20-EL-10	ISI-I-10-1A	12	0	0	0	0		
				20-DCA/EL-10	ISI-I-10-1A	1	0	0	0	0		NPS 4 or Larger Dissimilar Metal Butt Weld
			Total 20.0"			25	0	0	0	0		PRR-10
			Total RHR System			57	0	0	0	0		
		Vol/Surf	RWCU	6-DL-6	ISI-I-12-2	15	0	0	0	0		
				4-DM-12	ISI-I-12-2	18	0	0	0	0		
				4-DA/DM-12	ISI-I-12-2	1	0	0	0	0		
				4-DM/DA-12	ISI-I-12-2	1	0	0	0	0		
				4-DA-12	ISI-I-12-2	2	0	0	0	0		
				6-EA-12	ISI-I-12-1SH1	2	0	0	0	0		
				6-EA/DCA-12	ISI-I-12-1SH1	1	0	0	0	0		
				6-DCA-12	ISI-I-12-1SH1	32	0	0	0	0		
				6-DCA/EA-12	ISI-I-12-1SH1	1	0	0	0	0		
				6-DA/DL-6	ISI-I-12-2	1	0	0	0	0		NPS 4 or Larger Dissimilar Metal Butt Weld
			Total RWC System			74	0	0	0	0		PRR-10
		Vol/Surf	RCIC	4-DL-6	ISI-I-13-1	2	0	0	0	0		
				4-DB-13	ISI-I-13-1	15	0	0	0	0		
			Total RCIC System			17	0	0	0	0		PRR-10

Exam Item	Item Description	Exam Method	System	Line or Component ID	ISO No.	No. Items	No. Sch'd	INSPECTION PERIODS 1ST Stat.	2ND Stat.	3RD Stat.	Rel Req	Remarks/ Comments
Examination Category: B-J, PRESSURE RETAINING WELDS IN PIPING												
[Historical Reference Purposes Only - See Exam. Category R-A for Period Selections]												
B9.11-[1,2,3,6]	Circumferential Welds in Piping NPS 4 or Larger	Vol/Surf	CS	10-DBA-14	ISI-I-14-1	14	0	0	0	0		
				10-DC-14	ISI-I-14-1	9	0	0	0	0		
				10-DCA-14	ISI-I-14-1	13	0	0	0	0		
				10-DC/DCA-14	ISI-I-14-1	3	0	0	0	0		
				10-DCA/DC-14	ISI-I-14-1	1	0	0	0	0		
				10-DBA/DCA-14	ISI-I-14-1	4	0	0	0	0		NPS 4 or Larger Dissimilar Metal Butt Weld
			Total CS System			44	0	0	0	0		PRR-10
		Vol/Surf	HPCI	14-DL-6	ISI-I-23-1	4	0	0	0	0		
				14-DB-23	ISI-I-23-1	14	0	0	0	0		
				10-EB-23	ISI-I-23-1	22	0	0	0	0		
			Total HPCI System			40	0	0	0	0		PRR-10
		Vol/Surf	MS	6-EB-1	ISI-I-1-1SH1	12	0	0	0	0		
				20-EB-1	ISI-I-1-1SH1	44	0	0	0	0		
				20-EB-1	ISI-I-1-1SH2	20	0	0	0	0		
			Total MS System			76	0	0	0	0		PRR-10
		Vol/Surf	FW	12-DL-6	ISI-I-6-1	43	0	0	0	0		
				18-DL-6	ISI-I-6-1	24	0	0	0	0		
				18-DL-6	ISI-I-6-1A	9	0	0	0	0		
			Total FW System			76	0	0	0	0		PRR-10
			Total Examination Item B9.11			440	0	0	0	0		PRR-10
B9.21-[1,2,3,6]	Circumferential Welds in Piping Less Than NPS 4	Surf	CRD	N/A	N/A	0	0	0	0	0		
			MS	3-EL-1	ISI 1-1 SH2	6	0	0	0	0		
			RCIC	3-EB-13	ISI-I-13-1	19	0	0	0	0		
			SBLC	2"-DC	ISI-I-11-1	3	0	0	0	0		CR-PNP-2005-00319
			Total Examination Item B9.21			28	0	0	0	0		PRR-10

Exam Item	Item Description	Exam Method	System	Line or Component ID	ISO No.	No. Items	No. Sch'd	INSPECTION PERIODS 1ST	Stat.	2ND	Stat.	3RD	Stat.	Rel Req	Remarks/ Comments
Examination Category: B-J, PRESSURE RETAINING WELDS IN PIPING															
[Historical Reference Purposes Only - See Exam. Category R-A for Period Selections]															
B9.31-[1,2,3,5,6]	Branch Pipe Connection Welds NPS 4 or Larger	Vol/Surf	RECIRC	28-DCA-2	ISI-I-2R-A	2	0	0		0		0			
				28-DCA-2	ISI-I-2R-B	2	0	0		0		0			
			Total 28.0"			4	0	0		0		0			PRR-10
		Vol/Surf	RECIRC	N/A	N/A	0	0	0		0		0			
				N/A	N/A	0	0	0		0		0			
			Total 22.0"			0	0	0		0		0			PRR-10
		Vol/Surf	RECIRC	N/A	N/A	0	0	0		0		0			
				N/A	N/A	0	0	0		0		0			
			Total 12.0"			0	0	0		0		0			PRR-10
			Total RECIRC System			4	0	0		0		0			PRR-10
		Vol/Surf	MS	20-EB-1	ISI-I-1-1SH1	6	0	0		0		0			
			Total MS System			6	0	0		0		0			PRR-10
			Total Examination Item B9.31			14	0	0		0		0			PRR-10

Exam Item	Item Description	Exam Method	System	Line or Component ID	ISO No.	No. Items	No. Sch'd	INSPECTION PERIODS 1ST Stat.	2ND Stat.	3RD Stat.	Rel Req	Remarks/ Comments
Examination Category: B-J, PRESSURE RETAINING WELDS IN PIPING												
[Historical Reference Purposes Only - See Exam. Category R-A for Period Selections]												
B9.32- 1,2,3,8	Branch Pipe Connection Welds Less Than NPS 4	Surf	RECIRC	2-DCA-2	ISI-I-2R-A	1	0	0	0	0		
				2-DCA-2	ISI-I-2R-B	1	0	0	0	0		
			Total 28.0"			2	0	0	0	0		PRR-10
		Surf	RECIRC	N/A	N/A	0	0	0	0	0		
				N/A	N/A	0	0	0	0	0		
			Total 12.0"			0	0	0	0	0		PRR-10
			Total RECIRC System			2	0	0	0	0		PRR-10
		Surf	RHR	N/A	N/A	0	0	0	0	0		
			Total RHR System			0	0	0	0	0		PRR-10
		Surf	RWCU	2-DCA-12	ISI-I-12-1SH1	1	0	0	0	0		
			Total RWC System			1	0	0	0	0		PRR-10
		Surf	RCIC	N/A	N/A	0	0	0	0	0		
				N/A	N/A	0	0	0	0	0		
			Total RCIC System			0	0	0	0	0		PRR-10

Exam Item	Item Description	Exam Method	System	Line or Component ID	ISO No.	No. Items	No. Sch'd	INSPECTION PERIODS 1ST Stat.	2ND Stat.	3RD Stat.	Rel Req	Remarks/ Comments
Examination Category: B-J, PRESSURE RETAINING WELDS IN PIPING												
[Historical Reference Purposes Only - See Exam. Category R-A for Period Selections]												
B9.32-[1,2,3,8]	Branch Pipe Connection Welds Less Than NPS 4	Surf	CS	N/A	N/A	0	0	0	0	0		
				N/A	N/A	0	0	0	0	0		
			Total CS System			0	0	0	0	0		PRR-10
		Surf	HPCI	N/A	N/A	0	0	0	0	0		
				N/A	N/A	0	0	0	0	0		
			Total HPCI System			0	0	0	0	0		PRR-10
		Surf	MS	2-EB-1	ISI-I-1-1SH2	4	0	0	0	0		
			Total MS System			4	0	0	0	0		PRR-10
		Surf	FW	N/A	N/A	0	0	0	0	0		
				N/A	N/A	0	0	0	0	0		
			Total FW System			0	0	0	0	0		PRR-10
			Total Examination Item B9.32			9	0	0	0	0		PRR-10
B9.40-[1,2,3,8]	Socket Welds	Surf	RWCU	2-DB-4	ISI-I-12-1SH2	22	0	0	0	0		
				2-DB/EB-4	ISI-I-12-1SH2	1	0	0	0	0		
				2-EB/MD-4	ISI-I-12-1SH2	1	0	0	0	0		
				2-DCA-12	ISI-I-12-1SH2	15	0	0	0	0		
				2-DB/DCA-12	ISI-I-12-1SH2	1	0	0	0	0		Dissimilar Metal Socket Welds
			Total RWCU System			40	0	0	0	0		PRR-10
		Surf	RECIRC	2-DCA-2	ISI-I-2R-A	4	0	0	0	0		
				2-DCA-2	ISI-I-2R-B	4	0	0	0	0		
			Total RECIRC System			8	0	0	0	0		PRR-10
		Surf	SBLC	1 1/2-DC	ISI-I-11-1	69	0	0	0	0		
			Total SBLC System			69	0	0	0	0		PRR-10
			Total Examination Item B9.40			117	0	0	0	0		PRR-10

Exam Item	Item Description	Exam Method	System	Line or Component ID	ISO No.	No. Items	No. Sch'd	INSPECTION PERIODS 1ST Stat.	2ND Stat.	3RD Stat.	Rel Req	Remarks/ Comments

Examination Category: B-J, PRESSURE RETAINING WELDS IN PIPING

[Historical Reference Purposes Only - See Exam. Category R-A for Period Selections]

Notes for Examination Category B-J:

(1) Examinations shall include the following:

(A) All terminal ends in each pipe or branch run connected to vessels.

(B) All terminal ends and joints in each pipe or branch run connected to other components where the stress levels exceed either of the following limits under loads associated with specific seismic events and operational conditions:
(1) primary plus secondary stress intensity range of 2.4Sm for ferritic steel and austenitic steel
(2) cumulative usage factor U of 0.4
See paragraph 2.2.9 page 2-12 "Note" for specific details

(C) All dissimilar metal welds not covered under category B-F:

(D) Additional piping welds so that the total number of circumferential butt welds (or branch connection or socket welds) selected for examination equals 25% of the circumferential butt welds (or branch connection or socket welds) in the reactor coolant piping system. This total does not include welds excluded by IWB-1220. These additional welds may be located in one loop (one loop is defined for both PWR and BWR plants in the 1977 Edition).

(2) The initially selected welds are to be examined in the same sequence during successive inspection intervals, to the extent practical.

(3) Includes essentially 100% of weld length.

(4) For circumferential welds with intersecting longitudinal welds, surface examination of the longitudinal piping welds is required for those portions of the welds within the examination boundaries of intersecting Examination Category B-F and B-J circumferential welds.

(5) For circumferential welds with intersecting longitudinal welds, volumetric examination of the longitudinal piping welds is required for those portions of the welds within the examination boundaries of intersecting Examination Category B-F and B-J circumferential welds. The following requirements shall also be met
(A) When longitudinal welds are specified and locations are known, examination requirements shall be met for both transverse and parallel flaws at the intersection of the welds and and for that length of longitudinal weld within the circumferential weld examination volume.
(B) When longitudinal welds are specified but the locations are unknown, or the existence of longitudina welds is uncertain, th examination requirements shall be met for both transverse and parallel flaws within the entire examination volume of intersecting circumferential welds.

(6) For welds in carbon or low alloy steels, only those welds showing reportable preservice transverse indications need to be examined by the ultrasonic method for relectors transverse to the weld length direction except that circumferential welds with intersecting longitudinal welds shall meet note (5).

(7) Relief Request PRR-7 applies to all Code Item Number and regards the Repair/Replacement Welding Program in accordance with ASME Section XI, Sub Article IWA-4150.

(8) In 2001, the Pilgrim Nuclear Power Station implemented a risk-informed inservice inspection program for Class 1 piping welds (i.e., Examination Categories B-F and B-J). As part of this application, the Class 1 circumferential piping welds were assigned alternate Examination Category and Code Item Numbers that were consistent with ASME Section XI Code Case N-578-1. The alternate risk-informed Examination Category is R-A and the Code Item Numbers are R1.11 though R1.20, inclusive and are also shown in this Table. Note that the total number of Class 1 circumferential piping welds in the ISI Program remained unchanged. Only the designations have been changed to reflect the Examination Category and Code Item Numbers established in Code Case N-578-1. See Sections 1.5.7 and 2.6 of this ISI Program Plan for further information.

Exam Item	Item Description	Exam Method	System	Line or Component ID	ISO No.	No. Items	No. Sch'd	INSPECTION PERIODS 1ST Stat.	2ND Stat.	3RD Stat.	Rel Req	Remarks/ Comments
Examination Category: B-K, WELDED ATTACHMENTS FOR VESSELS, PIPING, PUMPS, AND VALVES												
B10.10-[1,2,3,4,6,7,8]	Pressure Vessels -Welded Attachments	Surf	RPV	N/A	ISI-I-54-1	4	4	4	0	0		
			RPV	N/A	ISI-I-54-3	1	1	0.5	0	0.5		
			Total Examination Item B10.10			5	5	4.5 90%	0 90%	0.5 100%		

Item No. B10.10 Notes:

(1) Weld buildup on nozzles that is in compression under normal conditions and provides oly componenet support is excluded from examination. Examination is limited to those welded attachments that meet the following conditions:

(a) the attachment is on the outside surface of the pressure retaining component;
(b) the attachment provides component support as defined in NF-1110;
(c) the attachment weld joins the attachment either directly to the surface of the component or to an integrally cast or forged attachment to the component.and
(d) the attachment weld is full penetration fillet, or partial penetration continuous or intermittent.

(2) The extent of the examination includes essentially 100% of the length of the attachment weld at each attachment subject to examination.

(3) Selected samples of welded attachments shall be examined each inspection interval.

(4) For multiple vessels of similar design, function, and service, only one welded attachment of only one of the multiple vessels shall be selected for examination.

(5) For piping, pumps, and valves, a sample of 10% of the welded attachments associated with the component supports selected examination under IWF-2510 shall be examined.

(6) Examination is required whenever component support member deformation (e.g., broken, bent, or pulled out part(s) is identified during operation, refueling, maintenance, examination, or testing.

(7) For the configuration shown in Fig. IWB-2500-13 and Fig. IWB-2500-14, a surface examination from an accessible side of the attachment weld shall be performed. Altrnatively, for the configuration shown in Fig. IWB-2500-14, a volumetric examination of volume A-B-C-D from an accessible side of the attachment weld may be perofrmed in lieu of the surface examination of surfaces A-B or C-D.

(8) Relief Request PRR-7 applies to all Code Item Numbers and regards the Repair/Replacement Welding Program in accordance with ASME Section XI, Sub Article IWA-4150.

Exam Item	Item Description	Exam Method	System	Line or Component ID	ISO No.	No. Items	No. Sch'd	INSPECTION PERIODS 1ST Stat.	2ND Stat.	3RD Stat.	Rel Req	Remarks/ Comments
Examination Category: B-K, WELDED ATTACHMENTS FOR VESSELS, PIPING, PUMPS, AND VALVES												
B10.20[1, 2, 3, 4, 5, 1]	Piping - Welded Attachments	Surf	RECIRC	28-DCA-2	ISI-I-2R-A	2	0	0	0	0		
				28-DCA-2	ISI-I-2R-B	2	0	0	0	0		
			Total 28.0"			4	0	0	0	0		
								0%	0%	0%		
		Surf	RECIRC	22"-DCA-2	ISI-I-2R-A	0	0	0	0	0		
				22"-DCA-2	ISI-I-2R-B	0	0	0	0	0		
			Total 22.0"			0	0	0	0	0		
								0%	0%	0%		
			Total RECIRC System			4	0	0	0	0		
								0%	0%	0%		
		Surf	RHR	18-DCA-10	ISI-I-10-1	7	0	0	0	0		
				20-EL-10	ISI-I-10-1A	1	1	0	1	0		
				20-DCA-10	ISI-I-10-1A	2	0	0	0	0		
			Total RHR System			10	1	0	1	0		
								0%	100%	100%		
		Surf	RWCU	4-DA-12	ISI-I-12-2	3	0	0	0	0		
				6-DCA-12	ISI-I-12-1SH1	1	0	0	0	0		
				6-DL-6	ISI-I-12-2	1	0	0	0	0		
			Total RWCU System			5	0	0	0	0		
								0%	0%	0%		
		Surf	RCIC	3-EB-13	ISI-I-13-1	2	0	0	0	0		
				4-DB-13	ISI-I-13-1	1	0	0	0	0		
			Total RCIC System			3	0	0	0	0		
								0%	0%	0%		

Exam Item	Item Description	Exam Method	System	Line or Component ID	ISO No.	No. Items	No. Sch'd	INSPECTION PERIODS 1ST Stat.	2ND Stat.	3RD Stat.	Rel Req	Remarks/ Comments
Examination Category: B-K, WELDED ATTACHMENTS FOR VESSELS, PIPING, PUMPS, AND VALVES												
B10.20-[1,2,3,5,6]	Piping - Welded Attachments	Surf	CS	10-DCA-14	ISI-I-14-1	0	0	0	0	0		
			Total CS System			0	0	0 0%	0 0%	0 0%		
		Surf	HPCI	10-EB-23	ISI-I-23-1	1	0	0	0	0		
				14-DB-23	ISI-I-23-1	1	0	0	0	0		
			Total HPCI System			2	0	0 0%	0 0%	0 0%		
		Surf	MS	20-EB-1	ISI-I-1-1SH1	13	1	1	0	0		
			Total MS System			13	1	1 100%	0 100%	0 100%		
		Surf	FW	18-DL-6	ISI-I-6-1	3	0	0	0	0		
				12-DL-6	ISI-I-6-1	7	2	0	0	2		
			Total FW System			10	2	0 0%	0 0%	2 100%		
			Total Examination Item B10.20			47	4	1 25%	1 50%	2 100%		
B10.30-[1,2,3,5,6]	Pumps - Welded Attachments	Surf	RECIRC	28-DCA-2	ISI-I-2R-A	1	1	1	0	0		
			RECIRC	28-DCA-2	ISI-I-2R-B	1	0	0	0	0		
			Total RECIRC System			2	1	1	0	0		
			Total Examination Item B10.30			2	1	1 100%	0 100%	0 100%		
			Total Examination Category B-K			54	10	6.5 65%	1 75%	2.5 100%		

Item Nos. B10.20 and B10.30 Notes:

(1) Weld buildup on nozzles that is in compression under normal conditions and provides oly componenet support is excluded from examination.
Examination is limited to those welded attachments that meet the following conditions:
(a) the attachment is on the outside surface of the pressure retaining component;
(b) the attachment provides component support as defined in NF-1110;
(c) the attachment weld joins the attachment either directly to the surface of the component or to an integrally cast or forged attachment to the component,and
(d) the attachment weld is full penetration fillet, or partial penetration continuous or intermittent.

(2) The extent of the examination includes essentially 100% of the length of the attachment weld at each attachment subject to examination.

(3) Selected samples of welded attachments shall be examined each inspection interval.

(4) For multiple vessels of similar design, function, and service, only one welded attachment of only one of the multiple vessels shall be selected for examination.

(5) For piping, pumps, and valves, a sample of 10% of the welded attachments associated with the component supports selected examination under IWF-2510 shall be examined.

(6) Examination is required whenever component support member deformation (e.g., broken, bent, or pulled out part(s) is identified during operation, refueling, maintenance, examination, or testing.

(7) For the configuration shown in Fig. IWB-2500-13 and Fig. IWB-2500-14, a surface examination from an accessible side of the attachment weld shall be performed. Altmatively, for the configuration shown in Fig. IWB-2500-14, a volumetric examination of volume A-B-C-D from an accessible side of the attachment weld may be perofrmed in lieu of the surface examination of surfaces A-B or C-D.

(8) *Relief Request PRR-7 applies to all Code Item Number and regards the Repair/Replacement Welding Program in accordance with ASME Section XI, Sub Article IWA-4150.*

Exam Item	Item Description	Exam Method	System	Line or Component ID	ISO No.	No. Items	No. Sch'd	INSPECTION PERIODS 1ST	Stat.	2ND	Stat.	3RD	Stat.	Rel Req	Remarks/ Comments
Examination Category B-L-1, Pressure Retaining Welds In Pump Casings															
B12.10-[1,4,5]	Pumps - Pump Casing Welds	Vol	RECIRC	N/A	N/A	0	0	0		0		0			
			Total Examination Item B12.10			0	0	0		0		0			
								0%		0%		0%			
			Total Examination Category B-L-1			0	0	0		0		0			
								0%		0%		0%			
Examination Category B-L-2, Pump Casings															
B12.20-[1,2]	Pumps - Pump Casing	VT-3	RECIRC	2-PI-201A	ISH-2R-A	1	0	0		0		0			
			RECIRC	2-PI-201B	ISH-2R-B	1	0	0		0		0			
			RECIRC	N/A	ISH-2R-A	1	0	0		0		0			
			Total Examination Item B12.20			3	0	0		0		0			
			Total Examination Category B-L-2			3	0	0		0		0			Only one pump in a group of pumps, when disassembled. See Notes
								0%		0%		0%			

Notes for Examination Categories B-L-1 and B-L-2:

(1) Examinations are limited to at least one pump in each group of pumps performing similar functions in the system, e.g., recirculating coolant pumps.

(2) Examination is required only when a pump or valve is disassembled for maintenance, repair, or volumetric examination. Examination of the internal pressure boundary shall include the internal pressure retaining sufaces made accessible for examination by disassembly. IF a partial examination is performed and a subsequent disassembly of that pump or valve allows a more extensive examination, an examination shall be performed during the subsequent disassembly. A complete examination is required only once during the interval.

(3) Examinations are limited to at least one valve within each group of valves that are of the same size, constructural design (such as globe, gate, or check valves), and manufacturing method, and that perform similar functions in the system (such as containment isolation and system overpressure protection).

(4) Includes essentially 100% of the weld length.

(5) Relief Request PRR-7 applies to all Code Item Number and regards the Repair/Replacement Welding Program in accordance with ASME Section XI, Sub Article IWA-4150.

Exam Item	Item Description	Exam Method	System	Line or Component ID	ISO No.	No. Items	No. Sch'd	INSPECTION PERIODS 1ST Stat.	2ND Stat.	3RD Stat.	Rel Req	Remarks/ Comments
Examination Category: B-M-1, PRESSURE RETAINING WELDS IN VALVE BODIES												
B12.30-[3,4]	Valves, Less Than NPS 4 - Valve Body Welds	Surf	MS	3-EE-1	ISI-I-1-1SH2	2	2	0	0	2		
			Total Examination Item B12.30			2	2	0 0%	0 0%	2 100%		
B12.40-[3,4]	Valves, NPS 4 and Larger - Valve Body Welds	Vol	HPCI	10-EB-23	ISI-I-23-1	2	2	0	0	2		
			Total Examination Item B12.40			2	2	0 0%	0 0%	2 100%		
			Total Examination Category B-M-1			4	4	0 0%	0 0%	4 100%		
Examination Category: B-M-2, VALVE BODIES												
B12.50-[2,3]	Valve Bodies, Exceeding NPS 4	VT-3	RECIRC	28-DCA-2	ISI-I-2R-A	2	0	0	0	0		
				28-DCA-2	ISI-I-2R-B	2	0	0	0	0		
			Total RECIRC System			4	0	0	0	0		
		VT-3	RHR	18-DC-10	ISI-I-10-1	2	0	0	0	0		
				18-DCA-10	ISI-I-10-1	4	0	0	0	0		
				20-EL-10	ISI-I-10-1A	1	0	0	0	0		
				20-DCA-10	ISI-I-10-1A	2	0	0	0	0		
			Total RHR System			9	0	0	0	0		
		VT-3	RWCU	6-DCA-12	ISI-I-12-1SH1	2	0	0	0	0		
				6-EA-12	ISI-I-12-1SH1	1	0	0	0	0		
				6-DL-6	ISI-I-12-2	2	0	0	0	0		
			Total RWCU System			5	0	0	0	0		
		VT-3	RCIC	N/A	N/A	0	0	0	0	0		
			Total RCIC System			0	0	0	0	0		
		VT-3	CS	10-DC-14	ISI-I-14-1	1	0	0	0	0		
				10-DCA-14	ISI-I-14-1	5	0	0	0	0		
			Total CS System			6	0	0	0	0		

Exam Item	Item Description	Exam Method	System	Line or Component ID	ISO No.	No. Items	No. Sch'd	INSPECTION PERIODS 1ST Stat.	2ND Stat.	3RD Stat.	Rel Req	Remarks/ Comments
Examination Category: B-M-2, VALVE BODIES												
B12.50-[2,3]	Valve Bodies, Exceeding NPS 4	VT-3	HPCI	10-EB-23	ISI-I-23-1	2	0	0	0	0		
				14-DL-6	ISI-I-23-1	1	0	0	0	0		
				14-DB-23	ISI-I-23-1	1	0	0	0	0		
			Total HPCI System			4	0	0	0	0		
		VT-3	MS	6-EB-1	ISI-I-1-1SH1	6	0	0	0	0		
				20-EB-1	ISI-I-1-1SH2	8	0	0	0	0		
			Total MS System			14	0	0	0	0		
		VT-3	FW	18-DL-6	ISI-I-6-1	6	0	0	0	0		
			Total FW System			6	0	0	0	0		
			Total Examination Category B-M-2			48	0	0	0	0		Limited to one valve within each group, when disassembled. See Notes.
								0%	0%	0%		

Notes for Examination Categories B-M-1 and B-M-2:

(1) Examinations are limited to at least one pump in each group of pumps performing similar functions in the system, e.g., recirculating coolant pumps.

(2) Examination is required only when a pump or valve is disassembled for maintenance, repair, or volumetric examination. Examination of the internal pressure boundary shall include the internal pressure retaining suface made accessible for examination by disassembly. IF a partial examination is performed and a subsequent disassembly of that pump or valve allows a more extensive examination, an examination shall be performed during the subsequent disassembly. A complete examination is required only once during the interval.

(3) Examinations are limited to at least one valve within each group of valves that are of the same size, constructural design (such as globe, gate, or check valves), and manufacturing method, and that perform similar functions in the system (such as containment isolation and system overpressure protection).

(4) Includes essentially 100% of the weld length.

(5) Relief Request PRR-7 applies to all Code Item Number and regards the Repair/Replacement Welding Program in accordance with ASME Section XI, Sub Article IWA-4150.

Exam Item	Item Description	Exam Method	System	Line or Component ID	ISO No.	No. Items	No. Sch'd	INSPECTION PERIODS 1ST	Stat.	2ND	Stat.	3RD	Stat.	Rel Req	Remarks/ Comments
Examination Category: B-N-1, INTERIOR OF REACTOR VESSEL															
B13.10-[1,3]	Reactor Vessel - Vessel Interior	VT-3	RPV	N/A	N/A	1	1	1		0		0			Examinations conducted within this code category are performed in accordance with the Reactor Vessel Integrity and Invessel Visual Inspection program.
			Total Examination Category B-N-1			1	1	1 100%		0 100%		0 100%			
Examination Category: B-N-2, WELDED CORE SUPPORT STRUCTURES AND INTERIOR ATTACHMENTS TO REACTOR VESSELS															
B13.20	Reactor Vessel (BWR) - Interior Attachments within Beltline Region	VT-1	RPV	N/A	N/A	23	23	0		0		23			Examinations conducted within this code category are performed in accordance with the Reactor Vessel Integrity and Invessel Visual Inspection program.
B13.30	Reactor Vessel (BWR) - Interior Attachments Beyond Beltline Region	VT-3	RPV	N/A	N/A	48	48	0		0		48			
B13.40-[2]	Reactor Vessel (BWR) - Core Support Structure	VT-3	RPV	N/A	N/A	1	1	0		0		1			
			Total Examination Category B-N-2			72	72	0 0%		0 0%		72 100%			

Notes for Examination Categories B-N-1 & B-N-2:

(1) Areas to be examined shall include the spaces above and below the reactor core that are made accessible for examination by removal of components during normal refueling outages.

(2) The structure shall be removed from the reactor vessel for examination (not applicable to PNPS).

(3) At 1st refueling outage, and subsequent refueling outages at approximately 3 year intervals.

(4) Relief Request PRR-7 applies to all Code Item Number and regards the Repair/Replacement Welding Program in accordance with ASME Section XI, Sub Article IWA-4150.

Exam Item	Item Description	Exam Method	System	Line or Component ID	ISO No.	No. Items	No. Sch'd	INSPECTION PERIODS 1ST	Stat.	2ND	Stat.	3RD	Stat.	Rel Req	Remarks/ Comments
Examination Category: B-O, PRESSURE RETAINING WELDS IN CONTROL ROD HOUSINGS															
B14.10	Reactor Vessel - Welds in CRD Housing-[1]	Vol or Surf	RPV	N/A	N/A	36	4	0		0		4			10% of peripheral CRD housings
			Total Examination Category B-O			36	4 11%	0 0%		0 0%		4 100%			

Notes for Examination Category B-O:

(1) 36 peripheral CRD housings.

Exam Item	Item Description	Exam Method	System	Line or Component ID	ISO No.	No. Items	No. Sch'd	1ST	Stat.	2ND	Stat.	3RD	Stat.	Rel Req	Remarks/ Comments
Examination Category: B-P, ALL PRESSURE RETAINING COMPONENTS															
B15.10-[1,2,3,4]	Reactor Vessel - Pressure Retaining Boundary	VT-2	RPV	N/A	Various	1	5	2		1		2			PRR-2
B15.40-[1,2,3,4]	Heat Exchangers - Pressure Retaining Boundary	VT-2	N/A	N/A	N/A	0	0	0		0		0			PRR-2
B15.50-[1,2,3,4]	Piping - Pressure Retaining Boundary	VT-2	RECIRC	N/A	Various	1	5	2		1		2			PRR-2 & PRR-4
								0		0		0			
		VT-2	SBLC	N/A	ISI-I-11-1	1	5	2		1		2			
B15.60-[1,2,3,4]	Pumps - Pressure Retaining Boundary	VT-2	RECIRC	N/A	Various	1	5	2		1		2			PRR-2
B15.70-[1,2,3,4]	Valves - Pressure Retaining Boundary	VT-2	RECIRC	N/A	Various	1	5	2		1		2			PRR-2 & PRR-4
			Total Examination Category B-P			5	25	10 40%		5 60%		10 100%			

Notes for Examination Category B-P:

(1) Visual examination of IWA-5240.

(2) The System Leakage Test (IWB-5221) shall be conducted prior to plant startup following each reactor refueling outage.

(3) Pressure retaining components (e.g., pressure vessels, piping, pumps and valves, etc.) that are subject to system pressure tests or hydrostatic tests are identified on the Inservice Inspection Boundary Drawings listed in Appendix E of this ISI Plan.

(4) Relief Request PRR-7 applies to all Code Item Number and regards the Repair/Replacement Welding Program in accordance with ASME Section XI, Sub Article IWA-4150.

Exam Item	Item Description	Exam Method	System	Line or Component ID	ISO No.	No. Items	No. Sch'd	INSPECTION PERIODS 1ST	Stat.	2ND	Stat.	3RD	Stat.	Rel Req	Remarks/ Comments
Examination Category: C-A, PRESSURE RETAINING WELDS IN PRESSURE VESSELS[6]															
C1.10	Shell Circumferential Welds														
		Vol	RHR	E207A	ISI-E207A	3	3	1		1		1			
		Vol	RHR	E207B	ISI-E207B	3	0	0		0		0			
			Total Examination Item C1.10			6	3	1		1		1			
								33%		67%		100%			
C1.20	Head Circumferential Welds														
		Vol	RHR	E207A	ISI-E207A	2	2	1		0		1			
		Vol	RHR	E207B	ISI-E207B	2	0	0		0		0			
			Total Examination Item C1.20			4	2	1		0		1			
								50%		50%		100%			
C1.30	Tubesheet-to-Shell Weld														
		Vol	RHR	E207A	ISI-E207A	0	0	0		0		0			
		Vol	RHR	E207B	ISI-E207B	0	0	0		0		0			
			Total Examination Item C1.30			0	0	0		0		0			
								0%		0%		0%			
		Total Examination Category C-A				10	5	2		1		2			
								40%		60%		100%			

Notes for Examination Category C-A:

(1) Includes essentially 100% of the weld length.

(2) Gross structural discontinuity is defined in NB-3213.2. Examples are junctions between shells of different thickness, cylindrical shell-to-conical shell junctions, shell (or head)-to-flange welds and head-to-shell welds.

(3) In the case of multiple vessels of similar design, size, and service (such as steam generators, heat exchangers), the required examinations may be limited to one vessel or distributed among the vessels.

(4) The vessel areas selected for the initial examination shall be reexamined in the same sequence over the service lifetime of the component, to the extent practical.

(5) For welds in vessels with nominal wall thickness of 0.2 in. or less, a surface examination may be applied in lieu of the volumetric examination. The examination shall include the weld and 0.5 in. on either side of the weld. The acceptance standard for the examination shall be those specified for piping in IWC-3514.

(6) Relief Request PRR-7 applies to all Code Item Numbers and regards the Repair/Replacement Welding Program in accordance with ASME Section XI, Sub Article IWA-4150.

Exam Item	Item Description	Exam Method	System	Line or Component ID	ISO No.	No. Items	No. Sch'd	INSPECTION PERIODS 1ST	Stat.	2ND	Stat.	3RD	Stat.	Rel Req	Remarks/ Comments
Examination Category: C-B. PRESSURE RETAINING NOZZLE WELDS IN VESSELS[8]															
C2.11	Nozzles in Vessels ≤1/2 in. Nominal Thickness: Nozzle-to-Shell (or Head) Weld	Surf	N/A	N/A	N/A	0	0	0		0		0			
			Total Examination Item C2.11			0	0	0 0%		0 0%		0 0%			
C2.21	Nozzles Without Reinforcing Plate in Vessels > ½ in. Nominal Thickness: Nozzle-to-Shell (or Head) Weld	Surf/Vol	N/A	N/A	N/A	0	0	0		0		0			
			Total Examination Item C2.21			0	0	0 0%		0 0%		0 0%			
C2.22	Nozzles Without Reinforcing Plate in Vessels > ½ in. Nominal Thickness: Nozzle Inside Radius Section	Vol	N/A	N/A	N/A	0	0	0		0		0			
			Total Examination Item C2.22			0	0	0 0%		0 0%		0 0%			
C2.31	Nozzles With Reinforcing Plate in Vessels > ½ in. Nominal Thickness: Reinforcing Plate Welds to Nozzle and Vessel														
		Surf	RHR	10-E207A-N3	ISI-E207A	2	0	0		0		0			
		Surf	RHR	10-E207A-N4	ISI-E207A	2	0	0		0		0			
		Surf	RHR	10-E207B-N3	ISI-E207B	2	2	0		2		0			
		Surf	RHR	10-E207B-N4	ISI-E207B	2	2	0		0		2			
			Total Examination Item C2.31			8	4	0 0%		2 50%		2 100%			
C2.32	Nozzles With Reinforcing Plate in Vessels > ½ in. Nominal Thickness: Nozzle-to-Shell (or Head) Welds When Inside of Vessel is Accessible	Vol	All nozzles at terminal ends of piping runs			0	0	0		0		0			
			Total Examination Item C2.32			0	0	0 0%		0 0%		0 0%			

Exam Item	Item Description	Exam Method	System	Line or Component ID	ISO No.	No. Items	No. Sch'd	INSPECTION PERIODS 1ST	Stat.	2ND	Stat.	3RD	Stat.	Rel Req	Remarks/ Comments
Examination Category: C-B, PRESSURE RETAINING NOZZLE WELDS IN VESSELS[6]															
C2.33	Nozzles With Reinforcing Plate in Vessels > ½ in. Nominal Thickness: Nozzle-to-Shell (or Head) Welds When Inside of Vessel is Inaccessible														
		VT-2	RHR	10-E207A-N3-1	ISI-E207A	1	0	0		0		0			
		VT-2	RHR	10-E207A-N4-1	ISI-E207A	1	0	0		0		0			
		VT-2	RHR	10-E207B-N3-1	ISI-E207B	1	1	1		0		0			
		VT-2	RHR	10-E207B-N4-1	ISI-E207B	1	1	1		0		0			
			Total Examination Item C2.33			4	2	2		0		0			
								100%		0%		0%			
		Total Examination Category C-B				12	6	2		2		2			
								33%		67%		100%			

Notes for Examination Category C-B:

(1) Includes nozzles welded to or integrally cast in vessels that connect to piping runs (manways and handholds are excluded).

(2) Includes only those piping runs selected for examination under Examination Category C-F.

(3) The nozzles selected initially for examination shall be reexamined over the service lifetime of the component, to the extent practical.

(4) In the case of multiple vessels of similar design, size, and service (such as steam generators, heat exchangers), the required examinations be limited to one vessel or distributed among the vessels.

(5) The telltale hole in reinforcing plate shall be examined for evidence of leakage while vessel is undergoing the system leakage test (IWC-5220) as required by Examination Category C-H.

(6) Relief Request PRR-7 applies to all Code Item Numbers and regards the Repair/Replacement Welding Program in accordance with ASME Section XI, Sub Article IWA-4150.

Exam Item	Item Description	Exam Method	System	Line or Component ID	ISO No.	No. Items	No. Sch'd	INSPECTION PERIODS 1ST	Stat.	2ND	Stat.	3RD	Stat.	Rel Req	Remarks/ Comments
Examination Category: C-C, WELDED ATTACHMENTS FOR VESSELS, PIPING, PUMPS, AND VALVES[7]															
C3.10	Pressure Vessels - Welded Attachments														
		Surf	RHR	10-E207A-S1 thru S	ISI-E207A	4	0	0		0		0			
		Surf	RHR	10-E207B-S1 thru S	ISI-E207B	4	1	1		0		0			IAW, IWC Table 2500-1, Note 4
			Total RHR System			8	1	1 100%		0 100%		0 100%			
			Total Examination Item C3.10			8	1	1 100%		0 100%		0 100%			
C3.20	Piping - Welded Attachments														
		Surf	CACS	20-HM-45	ISI-1-50-1	7	2	0		2		0			
			Total CACS System			7	2	0 0%		2 100%		0 100%			
		Surf	CRD	6-EB-3	ISI-I-3-1	4	0	0		0		0			
			Total CRD System			4	0	0 0%		0 0%		0 0%			
		Surf	RHR	20-HB-10	ISI-I-10-1B	9	5	0		3		2			
			TOTAL RHR 20"			9	5	0 0%		3 60%		2 100%			

Exam Item	Item Description	Exam Method	System	Line or Component ID	ISO No.	No. Items	No. Sch'd	INSPECTION PERIODS 1ST	Stat.	2ND	Stat.	3RD	Stat.	Rel Req	Remarks/ Comments
Examination Category: C-C, WELDED ATTACHMENTS FOR VESSELS, PIPING, PUMPS, AND VALVES[7]															
C3.20	Piping - Welded Attachments (cont'd)														
		Surf	RHR	18-GB-10	ISI-I-10-3A	3	0	0		0		0			
		Surf	RHR	18-GB-10	ISI-I-10-4BSH1	6	2	0		0		2			
		Surf	RHR	18-GB-10	ISI-I-10-3B	3	1	0		1		0			
		Surf	RHR	18-HB-10	ISI-I-10-2A	6	0	0		0		0			
		Surf	RHR	18-HB-10	ISI-I-10-2B	6	0	0		0		0			
		Surf	RHR	18-HB-10	ISI-I-10-1B	1	1	0		0		1			
		Surf	RHR	18-HL-10	ISI-I-10-2B	9	0	0		0		0			
		Surf	RHR	18-HL-10	ISI-I-10-2A	8	0	0		0		0			
		Surf	RHR	18-HB-10	ISI-1-10-1B	9	0	0		0		0			
			TOTAL RHR 18"			51	4	0		1		3			
								0%		25%		100%			
		Surf	RHR	16-GB-10	ISI-I-10-3B	1	0	0		0		0			
			TOTAL RHR 16"			1	0	0		0		0			
								0%		0%		0%			
		Surf	RHR	12-GB-10	ISI-I-10-3A	3	1	1		0		0			
		Surf	RHR	12-GB-10	ISI-I-10-5BSH1	1	0	0		0		0			
		Surf	RHR	12-GB-10	ISI-I-10-3B	3	0	0		0		0			
		Surf	RHR	12-GB-10	ISI-I-10-4ASH1	3	1	0		1		0			
		Surf	RHR	12-GB-10	ISI-I-10-4BSH1	2	0	0		0		0			
		Surf	RHR	12-GB-10	ISI-I-10-4BSH2	4	0	0		0		0			
		Surf	RHR	12-HL-10	ISI-I-10-5BSH1	2	1	0		0		1			
		Surf	RHR	12-HL-10	ISI-I-10-4ASH1	2	1	0		1		0			
			TOTAL RHR 12"			20	4	1		2		1			
								25%		75%		100%			
		Surf	RHR	10-GB-10	ISI-I-10-5BSH2	2	0	0		0		0			
				10-GB-10	ISI-I-10-4ASH2	1	0	0		0		0			
			TOTAL RHR 10"			3	0	0		0		0			
								0%		0%		0%			
		Surf	RHR	6-HB-10	ISI-I-10-1C	8	0	0		0		0			
		Surf	RHR	6-HL-10	ISI-I-10-4ASH1	2	0	0		0		0			
		Surf	RHR	6-HL-10	ISI-I-10-5BSH1	1	0	0		0		0			
			TOTAL RHR 6"			11	0	0		0		0			
								0%		0%		0%			
			Total RHR System			95	13	1		6		6			
								8%		54%		100%			

Exam Item	Item Description	Exam Method	System	Line or Component ID	ISO No.	No. Items	No. Sch'd	INSPECTION PERIODS 1ST	Stat.	2ND	Stat.	3RD	Stat.	Rel Req	Remarks/ Comments
Examination Category: C-C, WELDED ATTACHMENTS FOR VESSELS, PIPING, PUMPS, AND VALVES[7]															
C3.20	Piping - Welded Attachments (cont'd)														
		Surf	RCIC	6-HD-13	ISI-I-13-2	4	0	0		0		0			
		Surf	RCIC	6-HE-26	ISI-I-13-4	1	0	0		0		0			
		Surf	RCIC	6-HE-26	ISI-I-13-5	3	0	0		0		0			
		Surf	RCIC	6-HL-13	ISI-I-13-2	2	0	0		0		0			
		Surf	RCIC	8-HL-13	ISI-I-13-3	3	0	0		0		0			
		Surf	RCIC	8-HB-13	ISI-I-13-3	1	1	0		1		0			
			Total RCIC System			14	1	0 0%		1 100%		0 100%			
		Surf	CS	18-HD-14	ISI-I-14-2B	2	0	0		0		0			
		Surf	CS	18-HD-14	ISI-I-14-2A	1	0	0		0		0			
		Surf	CS	18-HL-14	ISI-I-14-2A	2	0	0		0		0			
		Surf	CS	18-HL-14	ISI-I-14-2B	1	0	0		0		0			
		Surf	CS	10-GB-14	ISI-I-14-2A	8	2	1		0		1			
		Surf	CS	10-GB-14	ISI-I-14-2B	8	2	1		0		1			
		Surf	CS	6-GB-14	ISI-1-14-2A	1									
		Surf	CS	6-HD-14	ISI-I-14-2B	1	0	0		0		0			
			TOTAL CS System			24	4	2 50%		0 50%		2 100%			
		Surf	RBCCW	N/A	N/A	0	0	0		0		0			
			Total RBCCW System			0	0	0 0%		0 0%		0 0%			
		Surf	HPCI	10-DB-23	ISI-I-23-5	2	0	0		0		0			
		Surf	HPCI	10-EB-23	ISI-I-23-2	6	3	2		1		0			
		Surf	HPCI	14-DB-23	ISI-I-23-5	3	1	0		0		1			
		Surf	HPCI	14-EB-23	ISI-I-23-5	2	0	0		0		0			
		Surf	HPCI	24-HL-23	ISI-I-23-3	1	1	0		0		1			
		Surf	HPCI	20-HB-23	ISI-I-23-3	1	1	1		0		0			
		Surf	HPCI	16-HE-26	ISI-I-23-4	1	1	0		1		0			
		Surf	HPCI	16-HL-23	ISI-I-23-4	3	0	0		0		0			
		Surf	HPCI	16-HD-23	ISI-I-23-4	3	0	0		0		0			
			TOTAL HPCI System			22	7	3 43%		2 71%		2 100%			

Exam Item	Item Description	Exam Method	System	Line or Component ID	ISO No.	No. Items	No. Sch'd	INSPECTION PERIODS 1ST	Stat.	2ND	Stat.	3RD	Stat.	Rel Req	Remarks/ Comments
Examination Category: C-C, WELDED ATTACHMENTS FOR VESSELS, PIPING, PUMPS, AND VALVES[7]															
C3.20	Piping - Welded Attachments (cont'd)														
		Surf	MS	N/A	N/A	0	0	0		0		0			
			TOTAL MS System			0	0	0 0%		0 0%		0 0%			
			Total Examination Item C3.20			166	27	6 22%		11 63%		10 100%			
C3.30	Pumps - Welded Attachments														Selection based Table IWC-2500-1, Note 5
		Surf	CS	PUMP 14-215A	ISI-1-14-2A	1	1	0		0		1			
		Surf	CS	PUMP 14-215B	ISI-1-14-2B	1	0	0		0		0			
			TOTAL CS System			2	1	0 0%		0 0%		1 100%			
		Surf	RHR	PUMP 10-P-203A	ISI-I-10-2A	1	1	0		0		1			
		Surf	RHR	PUMP 10-P-203B	ISI-I-10-2B	1	0	0		0		0			
		Surf	RHR	PUMP 10-P-203C	ISI-I-10-2A	1	0	0		0		0			
		Surf	RHR	PUMP 10-P-203D	ISI-I-10-2B	1	0	0		0		0			
		Surf	RHR	PUMP 10-P-207A	ISI-E207A	4	0	0		0		0			
		Surf	RHR	PUMP 10-P-207B	ISI-E207B	4	1	1		0		0			
			TOTAL RHR System			12	2	1 50%		0 50%		1 100%			
			Total Examination Item C3.30			14	3	1 33%		0 33%		2 100%			
C3.40	Valves - Welded Attachments														
		Surf	N/A	N/A	N/A	0	0	0		0		0			
			Total Examination Item C3.40			0	0	0		0		0			
		Total Examination Category C-C				188	31	8 26%		11 61%		12 100%			

Notes for Examination Category C-C:

(1) The examination is limited to those integrally welded attachments that meet the following conditions:
(a) The attachment is on the outside surface of the pressure retaining components;
(b) the attachment provides component support as defined in NF-1110;
(c) the attachment weld joins the attachment either directly to the surface of the component or to an integrally cast or forged attachment to the component; and
(d) the attachment weld is full penetration, fillet, or partial penetration, coninuous, or intermittent.

(2) The exent of the examination includes essentially 100% of the length of the attachment weld at each attachment subject to examination.

(3) Selected samples of integrally welded attachments shall be examined each inspection interval.

(4) For multiple vessels of similar design, function and service, only one welded attachment of only one of the multiple vessels shall be selected for examination.

(5) For piping, pumps, and valves, a sample of 10% of the welded attachments associated with the component supports selected for examination under IWF-2510 shall be examined.

(6) Examination is required whenever component support member deformation (e.g., broken, bent, or pulled out parts) is identifed during operation, refueling, maintenance, examination, or testing.

(7) Relief Request PRR-7 applies to all Code Item Numbers and regards the Repair/Replacement Welding Program in accordance with ASME Section XI, Sub Article IWA-4150.

Pilgrim Nuclear Power Station - Fourth Ten-Year Interval
Inservice Inspection Program Plan
TABLE 3.1-2
ISI CLASS 2 COMPONENTS (IWC) SUMMARY TABLE

Exam Item	Item Description	Exam Method	System	Line or Component ID	ISO No.	No. Items	No. Sch'd	1ST	Stat.	2ND	Stat.	3RD	Stat.	Rel Req	Remarks/ Comments
								INSPECTION PERIODS							
Examination Category: C-D, PRESSURE RETAINING BOLTING GREATER THAN 2 in. IN DIAMETER															
C4.10	Pressure Vessels - Bolts and Studs														
		Vol	N/A	N/A	N/A	0	0	0		0		0			
			Total Examination Item C4.10			0	0	0		0		0			
C4.20	Piping - Bolts and Studs													Y	PRR-14
		Vol	N/A	N/A	N/A	0	0	0		0		0			
			Total Examination Item C4.20			0	0	0		0		0			
C4.30	Pumps - Bolts and Studs														
		Vol	N/A	N/A	N/A	0	0	0		0		0			
			Total Examination Item C4.30			0	0	0		0		0			
C4.40	Valves - Bolts and Studs														
		Vol	N/A	N/A	N/A	0	0	0		0		0			
			Total Examination Item C4.40			0	0	0		0		0			
		Total Examination Category C-D				0	0	0		0		0			
								0%		0%		0%			

Notes for Examination Category C-D:

(1) The examination may be performed on bolting in place under load or upon disassembly of the connection.

(2) When bolts or studs are removed for examination, surface examination meeting the acceptance standards of IWB-3515 may be substituted for volumetric examination.

(3) The examination of bolting for vessels, pumps, or valves may be conducted on one vessel, one pump, or one valve among a group of vessels, pumps, or valves that are similar in design, size, function, and service. In addition, when the component to be examined contains a group of bolted connections of similar design and size such as flange connections, or manway covers, the examination may be conducted on one bolted connection among the group.

(4) The examination of flange bolting in piping systems may be limited to one bolted connection among a group of bolted connections that are similar in design, size, function, and service.

(5) The areas selected for the initial examination shall be reexamined in the same sedquence over the service lifetime of the component, to the extent practical.

(6) Relief Request PRR-7 applies to all Code Item Numbers and regards the Repair/Replacement Welding Program in accordance with ASME Section XI, Sub Article IWA-4150.

(7) 100% bolts and studs at each bolted connection of components required to be inspected.

Exam Item	Item Description	Exam Method	System	Line or Component ID	ISO No.	No. Items	No. Sch'd	INSPECTION PERIODS 1ST	Stat.	2ND	Stat.	3RD	Stat.	Rel Req	Remarks/ Comments
Examination Category: C-F-1, PRESSURE RETAINING WELDS IN AUSTENITIC STAINLESS STEEL OR HIGH ALLOY PIPING[7,8]															
C5.11	Piping Welds ≥ 3/8" Nominal Wall Thickness for Piping > NPS 4: Circumferential Welds														
		Surf/Vol	CS	10-DB/DC-14	ISI-I-14-2A	1	1	0		1		0		Y	PRR-8
		Surf/Vol	CS	10-DC/DB-14	ISI-I-14-2B	1	1	0		1		0		Y	PRR-8
		Surf/Vol	CS	10-DC-14	ISI-I-14-1	2	2	0		1		1		Y	PRR-8
		Surf/Vol	CS	6-GB-14	ISI-I-14-2A	2	2	2		0		0		Y	PRR-8
		Surf/Vol	CS	6-GB-14	ISI-I-14-2B	2	2	1		0		1		Y	PRR-8
			TOTAL CS System			8	8	3		3		2			
							100%	38%		75%		100%			
		Surf/Vol	RHR	ISI-I-10-4BSH1	18-DB/DC-10	1	1	0		0		1		Y	PRR-8
		Surf/Vol	RHR	ISI-I-10-4BSH1	18-DC-10	1	1	0		1		0		Y	PRR-8
		Surf/Vol	RHR	ISI-I-10-4ASH2	18-DB/DC-10	1	1	0		1		0		Y	PRR-8
		Surf/Vol	RHR	ISI-I-10-4ASH2	18-DC-10	1	1	0		0		1		Y	PRR-8
			TOTAL RHR System			4	4	0		2		2			
							100%	0%		50%		100%			
			TOTAL EXAMINATION ITEM C5.11			12	12	3		5		4			
							100%	25%		67%		100%			
C5.21	Piping Welds > 1/5" Nominal Wall Thickness for Piping ≥ NPS 2 and ≤ NPS 4: Circumferential Weld														
		Surf/Vol	N/A	N/A	N/A	0	0	0		0		0		Y	PRR-8
			TOTAL EXAMINATION ITEM C5.21			0	0	0		0		0			
							0%	0%		0%		0%			
C5.30	Socket Welds														
		Surf	N/A	N/A	N/A	0	0	0		0		0		Y	PRR-8
			TOTAL EXAMINATION ITEM C5.30			0	0	0		0		0			
							0%	0%		0%		0%			

Exam Item	Item Description	Exam Method	System	Line or Component ID	ISO No.	No. Items	No. Sch'd	INSPECTION PERIODS 1ST	Stat.	2ND	Stat.	3RD	Stat.	Rel Req	Remarks/ Comments
Examination Category: C-F-1, PRESSURE RETAINING WELDS IN AUSTENITIC STAINLESS STEEL OR HIGH ALLOY PIPING[7,8]															
C5.41	Pipe Branch Connections of Branch Piping ≥ NPS 2: Circumferential Weld														
		Surf	N/A	N/A	N/A	0	0	0		0		0		Y	PRR-8
				TOTAL EXAMINATION ITEM C5.41		0	0	0		0		0			
							0%	0%		0%		0%			
		TOTAL EXAMINATION CATEGORY C-F-1				12	12	3		5		4			
							100%	25%		67%		100%			100% selected since < 28 welds

C-F-1 System Totals:

System	Total Welds in System	% of Total Weld Population	Welds Scheduled	Required Welds	Scheduled >= Required ?
CS	8	66.7%	8	0.6	Yes
RHR	4	33.3%	4	0.3	Yes
	12	100%	12	0.9	Yes

Notes for Examination Category C-F-1:

(1) Requirements for examination of welds in piping <= NPS 4 apply to PWR high pressure safety injection systems in accordance with the exemption criteria of IWC-1220.

(2) The welds selected for examination shall include 7.5%, but not less than 28 welds, of all dissimilar metal, austenitic stainless steel of high alloy welds not exempted by IWC-1220. (Some welds not exempted by IWC-1220 are not required to be nondestructively examined per Examination Category C-F-1. These welds, however, shall be included in the total weld count to which the 7.5% sampling rate is applied.) The examinations shall be distributed as follows:

(a) the examination shall be distributed among the Class 2 systems prorated, to the degree practicable, on the number of nonexempt dissimilar metal, austenitic stainless steel , or high alloy welds in each system (i.e., if a system contains 30% of the nonexempt welds, then 30% of the nondestructive examinations required by Examination Category C-F-1 should be performed on that system);

(b) within a system, the examinations shall be distributed among terminal ends, dissimilar metal welds, and structural discontinuities [See Note (3)] prorated, to the degree practicable, on the number of nonexempt terminal ends, dissimilar metal welds, and structural discontinuities in that system; and

(c) within the system, examinations shall be distributed between line sizes prorated to the degree practicable.

(3) Structural discontinuities include pipe weld joints to vessel nozzles, valve bodies, pump casings, pipe fittings (such as elbows, tees, reducers, flanges, etc., conforming to ANSI B16.9), and pipe branch connections and fittings.

(4) The welds selected for examination shall be reexamined in the same sequence during subsequent inspection intervals over the service lifetime of the piping component to the extent practical.

(5) For circumferential welds with intersecting longitudinal welds, surface examination of the longitudinal piping welds is required for those portions o fhte welds with the examination boundaries of intersecting circumferential welds.

(6) For circumferential welds with intersecting longitudinal welds, volumeteric examination of the longitudinal piping welds is required for those portions of the welds within the examination boundaries of intersecting circumferential welds. The following requirements shall also be met.

(a) When longitudinal welds are specified and locations are known, examination requirements shall be met for both transverse and parallel flaws at the intersection of the welds and for that length of longitudinal weld within the circumferential weld examination volume.

(b) When longitudinal welds are specified but locations are unknown, or the existance of longitudinal welds is uncertain, the examination requirements shall be met for both transverse and parallel flaws with in the entire examination volume of intersecting circumferential welds.

(7) Relief Request PRR-7 applies to all Code Item Numbers and regards the Repair/Replacement Welding Program in accordance with ASME Section XI, Sub Article IWA-4150.

(8) The Category C-F-1 and C-F-2 weld sample consists of 7.5% of all welds regardless of wall thickness. The number of components identified includes welds not exempted by IWC-1220 and not required to be nondestructively examined per Examination Category C-F-1 and C-F-2.

Exam Item	Item Description	Exam Method	System	Line or Component ID	ISO No.	No. Items	No. Sch'd	INSPECTION PERIODS 1ST	Stat.	2ND	Stat.	3RD	Stat.	Rel Req	Remarks/ Comments
Examination Category: C-F-2, PRESSURE RETAINING WELDS IN CARBON OR LOW ALLOY STEEL PIPING[7,8]															
C5.51	Piping Welds ≥ 3/8" Nominal Wall Thickness for Piping > NPS 4: Circumferential Weld														
		Vol/Surf	CRD	6-EB-3	ISI-I-3-1	44	3	1		1		1		Y	PRR-8
		Vol/Surf	CRD	12-EB-3	ISI-I-3-1	4	1	1		0		0		Y	PRR-8
			Total CRD System			48	4	2		1		1			
							8%	50%		75%		100%			
		Vol/Surf	RHR	N/A	N/A	0	0	0		0		0		Y	PRR-8
			Total 24" RHR			0	0	0		0		0			
								0%		0%		0%			
		Vol/Surf	RHR	20-HB-10	ISI-I-10-1B	38	3	3		0		0		Y	PRR-8
			Total 20" RHR			38	3	3		0		0			
								100%		100%		100%			
		Vol/Surf	RHR	18-DB-10	ISI-I-10-4BSH1	1	0	0		0		0		Y	PRR-8
		Vol/Surf	RHR	18-DB-10	ISI-I-10-4ASH2	2	0	0		0		0		Y	PRR-8
		Vol/Surf	RHR	18-GB-10	ISI-I-10-4BSH1	64	4	0		1		3		Y	PRR-8
		Vol/Surf	RHR	18-GB-10	ISI-I-10-4ASH2	10	1	0		1		0		Y	PRR-8
		Vol/Surf	RHR	18-GB-10	ISI-I-10-3A	11	2	1		1		0		Y	PRR-8
		Vol/Surf	RHR	18-GB-10	ISI-I-10-3B	11	1	0		1		0		Y	PRR-8
		Vol/Surf	RHR	18-GB-10	ISI-I-10-3A/4A	1	0	0		0		0		Y	PRR-8
		Vol/Surf	RHR	18-GB-10	ISI-I-10-3B/4B	1	0	0		0		0		Y	PRR-8
		Vol/Surf	RHR	18-HB-10	ISI-I-10-1B	10	1	1		0		0		Y	PRR-8
		Vol/Surf	RHR	18-HB-10	ISI-I-10-2A	20	1	1		0		0		Y	PRR-8
		Vol/Surf	RHR	18-HB-10	ISI-I-10-2B	20	1	0		1		0		Y	PRR-8
		Vol/Surf	RHR	18-HL-10	ISI-I-10-2B	25	2	0		2		0		Y	PRR-8
		Vol/Surf	RHR	18-HL-10	ISI-I-10-2A	26	2	2		0		0		Y	PRR-8
			Total 18" RHR			202	15	5		7		3			
								33%		80%		100%			
		Vol/Surf	RHR	16-GB-10	ISI-I-10-3B	16	1	0		1		0		Y	PRR-8
		Vol/Surf	RHR	16-GB-10	ISI-I-10-3A	16	2	0		1		1		Y	PRR-8
		Vol/Surf	RHR	16-HL-10	ISI-I-10-5BSH1	2	1	0		0		1		Y	PRR-8
		Vol/Surf	RHR	16-HL-10	ISI-I-10-4ASH1	2	0	0		0		0		Y	PRR-8
			Total 16" RHR			36	4	0		2		2			
								0%		50%		100%			
		Vol/Surf	RHR	N/A	N/A	0	0	0		0		0		Y	PRR-8
			Total 14" RHR			0	0	0		0		0			
								0%		0%		0%			

Exam Item	Item Description	Exam Method	System	Line or Component ID	ISO No.	No. Items	No. Sch'd	INSPECTION PERIODS 1ST	Stat.	2ND	Stat.	3RD	Stat.	Rel Req	Remarks/ Comments
Examination Category: C-F-2, PRESSURE RETAINING WELDS IN CARBON OR LOW ALLOY STEEL PIPING[7,8]															
C5.51	Piping Welds ≥ 3/8" Nominal Wall Thickness for Piping > NPS 4: Circumferential Weld														
		Vol/Surf	RHR	12-GB-10	ISI-I-10-5BSH2	6	1	0		0		1		Y	PRR-8
		Vol/Surf	RHR	12-GB-10	ISI-I-10-5BSH1	10	1	0		0		1		Y	PRR-8
		Vol/Surf	RHR	12-GB-10	ISI-I-10-3B	25	2	0		2		0		Y	PRR-8
		Vol/Surf	RHR	12-GB-10	ISI-I-10-4BSH1	3	0	0		0		0		Y	PRR-8
		Vol/Surf	RHR	12-GB-10	ISI-I-10-4ASH1	13	2	0		2		0		Y	PRR-8
		Vol/Surf	RHR	12-GB-10	ISI-I-10-3A	24	2	1		1		0		Y	PRR-8
		Vol/Surf	RHR	12-GB-10	ISI-I-10-4BSH2	36	3	0		1		2		Y	PRR-8
		Vol/Surf	RHR	12-GB-10	ISI-I-10-4ASH2	6	0	0		0		0		Y	PRR-8
		Vol/Surf	RHR	12-HL-10	ISI-I-10-5BSH1	17	1	0		1		0		Y	PRR-8
		Vol/Surf	RHR	12-HL-10	ISI-I-10-4ASH1	15	1	0		1		0		Y	PRR-8
			Total 12" RHR			155	13	1		8		4			
								8%		69%		100%			
		Vol/Surf	RHR	10-GB-10	ISI-I-10-5BSH2	24	3	0		1		2		Y	PRR-8
		Vol/Surf	RHR	10-GB-10	ISI-I-10-4ASH2	21	1	0		0		1		Y	PRR-8
		Vol/Surf	RHR	10-GL-10	ISI-I-10-4ASH2	6	0	0		0		0		Y	PRR-8
		Vol/Surf	RHR	10-GL-10	ISI-I-10-5BSH2	5	0	0		0		0		Y	PRR-8
			Total 10" RHR			56	4	0		1		3			
								0%		25%		100%			
		Vol/Surf	RHR	8-GBB-10	ISI-I-10-4BSH2	1	0	0		0		0		Y	PRR-8
			Total 8" RHR			1	0	0		0		0			
								0%		0%		0%			
		Vol/Surf	RHR	6-GB-10	ISI-I-10-5BSH1	2	1	0		0		1		Y	PRR-8
		Vol/Surf	RHR	6-GB-10	ISI-I-10-4BSH1	2	0	0		0		0		Y	PRR-8
		Vol/Surf	RHR	6-HB-10	ISI-I-10-1C	19	2	0		0		2		Y	PRR-8
		Vol/Surf	RHR	6-HL-10	ISI-I-10-5BSH1	17	1	0		0		1		Y	PRR-8
		Vol/Surf	RHR	6-HL-10	ISI-I-10-4ASH1	19	1	0		0		1		Y	PRR-8
			Total 6" RHR			59	5	0		0		5			
								0%		0%		100%			
			Total RHR System			547	44	9		18		17			
							8%	20%		61%		100%			
		Vol/Surf	RCIC	8-HB-13	ISI-I-13-3	13	1	0		1		0		Y	PRR-8
		Vol/Surf	RCIC	6-HD-13	ISI-I-13-2	18	2	1		0		1		Y	PRR-8
		Vol/Surf	RCIC	6-HE-26	ISI-I-13-5	19	1	1		0		0		Y	PRR-8
		Vol/Surf	RCIC	6-HE-26	ISI-I-13-4	11	1	0		0		1		Y	PRR-8
		Vol/Surf	RCIC	6-HL-13	ISI-I-13-2	9	0	0		0		0		Y	PRR-8
		Vol/Surf	RCIC	8-HL-13	ISI-I-13-3	21	2	0		2		0		Y	PRR-8
			Total RCIC System			91	7	2		3		2			
							8%	29%		71%		100%			
		Vol/Surf	RBCCW	N/A	N/A	0	0	0		0		0		Y	PRR-8
			Total RBCCW System			0	0	0		0		0			
								0%		0%		0%			

Exam Item	Item Description	Exam Method	System	Line or Component ID	ISO No.	No. Items	No. Sch'd	INSPECTION PERIODS 1ST	Stat.	2ND	Stat.	3RD	Stat.	Rel Req	Remarks/ Comments
Examination Category: C-F-2, PRESSURE RETAINING WELDS IN CARBON OR LOW ALLOY STEEL PIPING[7,8]															
C5.51	Piping Welds ≥ 3/8" Nominal Wall Thickness for Piping > NPS 4: Circumferential Weld														
		Vol/Surf	CS	10-GB-14	ISI-I-14-2A	41	2	1		1		0		Y	PRR-8
		Vol/Surf	CS	10-GB-14	ISI-I-14-2B	31	2	0		1		1		Y	PRR-8
		Vol/Surf	CS	10-DB-14	ISI-I-14-2A	1	0	0		0		0		Y	PRR-8
		Vol/Surf	CS	10-DB-14	ISI-I-14-2B	1	0	0		0		0		Y	PRR-8
		Vol/Surf	CS	6-GB-14	ISI-I-14-2B	3	0	0		0		0		Y	PRR-8
		Vol/Surf	CS	6-GB-14	ISI-I-14-2A	7	0	0		0		0		Y	PRR-8
		Vol/Surf	CS	6-HD-14	ISI-I-14-2A	5	1	0		0		1		Y	PRR-8
		Vol/Surf	CS	6-HD-14	ISI-I-14-2B	2	0	0		0		0		Y	PRR-8
		Vol/Surf	CS	18-HD-14	ISI-I-14-2A	5	0	0		0		0		Y	PRR-8
		Vol/Surf	CS	18-HD-14	ISI-I-14-2B	5	1	0		0		1		Y	PRR-8
		Vol/Surf	CS	12-HD-14	ISI-I-14-2A	3	0	0		0		0		Y	PRR-8
		Vol/Surf	CS	12-HD-14	ISI-I-14-2B	4	1	0		0		1		Y	PRR-8
		Vol/Surf	CS	6-GB-14	ISI-I-10-5BSH1	1	0	0		0		0		Y	PRR-8
		Vol/Surf	CS	18-HLB-14	ISI-I-14-2A	10	1	0		1		0		Y	PRR-8
		Vol/Surf	CS	18-HLB-14	ISI-I-14-2B	10	0	0		0		0		Y	PRR-8
		Vol/Surf	CS	18-HL-14	ISI-I-14-2A	11	1	0		1		0		Y	PRR-8
		Vol/Surf	CS	18-HL-14	ISI-I-14-2B	10	1	0		1		0		Y	PRR-8
			Total CS System			150	10	1		5		4			
							7%	10%		60%		100%			
		Vol/Surf	HPCI	14-DB-23	ISI-I-23-5	18	1	0		1		0		Y	PRR-8
		Vol/Surf	HPCI	10-DB-23	ISI-I-23-5	13	0	0		0		0		Y	PRR-8
		Vol/Surf	HPCI	10-EB-23	ISI-I-23-2	31	2	0		1		1		Y	PRR-8
		Vol/Surf	HPCI	14-HD-23	ISI-I-23-4	1	0	0		0		0		Y	PRR-8
		Vol/Surf	HPCI	Between pumps	ISI-I-23-4	5	1	0		1		0		Y	PRR-8
		Vol/Surf	HPCI	14-EB-23	ISI-I-23-5	17	2	2		0		0		Y	PRR-8
		Vol/Surf	HPCI	10-EB-23	ISI-I-23-5	1	0	0		0		0		Y	PRR-8
		Vol/Surf	HPCI	20-HB-23	ISI-I-23-3	19	2	0		1		1		Y	PRR-8
		Vol/Surf	HPCI	24-HL-23	ISI-I-23-3	6	1	0		1		0		Y	PRR-8
		Vol/Surf	HPCI	20-HL-23	ISI-I-23-3	2	0	0		0		0		Y	PRR-8
		Vol/Surf	HPCI	18-HB-23	ISI-I-23-3	2	0	0		0		0		Y	PRR-8
		Vol/Surf	HPCI	16-HE-26	ISI-I-23-4	2	0	0		0		0		Y	PRR-8
		Vol/Surf	HPCI	16-HE-226	ISI-I-23-4	13	0	0		0		0		Y	PRR-8
		Vol/Surf	HPCI	16-HL-23	ISI-I-23-4	11	2	0		1		1		Y	PRR-8
		Vol/Surf	HPCI	16-HB-23	ISI-I-23-3	2	1	0		1		0		Y	PRR-8
		Vol/Surf	HPCI	16-HD-23	ISI-I-23-4	16	0	0		0		0		Y	PRR-8
			Total HPCI System			159	12	2		7		3			
							8%	17%		75%		100%			
		Vol/Surf	FW	16-DE-6	ISI-I-6-1A	2	0	0		0		0		Y	PRR-8
		Vol/Surf	FW	18-DE/DL-6	ISI-I-6-1A	2	1	0		0		1		Y	PRR-8
			Total FW System			4	1	0		0		1			
							25%	0%		0%		100%			
		Vol/Surf	MS	20-EE-1	ISI-I-1-1SH2	4	1	0		0		1		Y	PRR-8
			Total MS System			4	1	0		0		1			
							25%	0%		0%		100%			
			Total Examination Item C5.51			1003	79	16		34		29			
							7.9%	20%		63%		100%			

Exam Item	Item Description	Exam Method	System	Line or Component ID	ISO No.	No. Items	No. Sch'd	INSPECTION PERIODS 1ST	Stat.	2ND	Stat.	3RD	Stat.	Rel Req	Remarks/ Comments
Examination Category: C-F-2, PRESSURE RETAINING WELDS IN CARBON OR LOW ALLOY STEEL PIPING[7,8]															
C5.61	Piping Welds > 1/5" Nominal Wall Thickness for Piping ≥ NPS 2 and ≤ NPS 4: Circumferential Weld														
		Vol/Surf	N/A	N/A	N/A	0	0	0		0		0			
			Total Examination Item C5.61			0	0	0		0		0			
							0%	0%		0%		0%			
C5.70	Socket Welds														
		Surf	HPCI	18-HB-23	ISI-I-23-3	1	1	0		1		0			
			Total HPCI System			1	1	0		1		0			
							100%	0%		100%		100%			
			Total Examination Item C5.70			1	1	0		1		0			
							100%	0%		100%		100%			
C5.81	Pipe Branch Connections of Branch Piping ≥ NPS 2: Circumferential Weld														
		Surf	RHR	N/A	N/A	0	0	0		0		0		Y	PRR-8
			Total 24" RHR			0	0	0		0		0			
								0%		0%		0%			
		Surf	RHR	N/A	N/A	0	0	0		0		0		Y	PRR-8
			Total 20" RHR			0	0	0		0		0			
								0%		0%		0%			
		Surf	RHR	18-GB-10	ISI-I-10-3B	1	0	0		0		0		Y	PRR-8
		Surf	RHR	18-GB-10	ISI-I-10-3A	1	0	0		0		0		Y	PRR-8
		Surf	RHR	18-GB-10	ISI-I-10-4ASH2	1	0	0		0		0		Y	PRR-8
		Surf	RHR	18-HB-10	ISI-I-10-2A	2	0	0		0		0		Y	PRR-8
		Surf	RHR	18-HB-10	ISI-I-10-2B	2	0	0		0		0		Y	PRR-8
			Total 18" RHR			7	0	0		0		0			
								0%		0%		0%			
		Surf	RHR	12-GB-10	ISI-I-10-5BSH1	1	0	0		0		0		Y	PRR-8
			Total 12" RHR			1	0	0		0		0			
								0%		0%		0%			

Exam Item	Item Description	Exam Method	System	Line or Component ID	ISO No.	No. Items	No. Sch'd	INSPECTION PERIODS 1ST	Stat.	2ND	Stat.	3RD	Stat.	Rel Req	Remarks/ Comments
Examination Category: C-F-2, PRESSURE RETAINING WELDS IN CARBON OR LOW ALLOY STEEL PIPING[7,8]															
C5.81	Pipe Branch Connections of Branch Piping ≥ NPS 2: Circumferential Weld														
		Surf	RHR	10-GL-10	ISI-I-10-4ASH2	1	0	0		0		0		Y	PRR-8
		Surf	RHR	10-GL-10	ISI-I-10-5BSH2	1	0	0		0		0		Y	PRR-8
			Total 10" RHR			2	0	0		0		0			
								0%		0%		0%			
		Surf	RHR	N/A	N/A	0	0	0		0		0		Y	PRR-8
			Total 8" RHR			0	0	0		0		0			
								0%		0%		0%			
		Surf	RHR	N/A	N/A	0	0	0		0		0		Y	PRR-8
			Total 6" RHR			0	0	0		0		0			
			Total RHR System			10	0	0		0		0			
							0%	0%		0%		0%			
		Surf	CS	10-GB-14	ISI-I-14-2A	1	1	0		0		1		Y	PRR-8
		Surf	CS	10-GB-14	ISI-I-14-2B	1	1	0		0		1		Y	PRR-8
		Surf	CS	18-HD-14	ISI-I-14-2A	1	0	0		0		0		Y	PRR-8
		Surf	CS	18-HD-14	ISI-I-14-2B	1	0	0		0		0		Y	PRR-8
			Total CS System			4	2	0		0		2			
							50%	0%		0%		100%			
		Surf	HPCI	4-EB-23	ISI-I-23-5	1	0	0		0		0		Y	PRR-8
		Surf	HPCI	24-HL-23	ISI-I-23-5	1	0	0		0		0		Y	PRR-8
			Total HPCI System			2	0	0		0		0			
							0%	0%		0%		0%			
			Total Examination Item C5.81			16	2	0		0		2			
							13%	0%		0%		100%			
		Total Examination Category C-F-2				1020	82	16		35		31			
							8.0%	20%		62%		100%			

Exam Item	Item Description	Exam Method	System	Line or Component ID	ISO No.	No. Items	No. Sch'd	INSPECTION PERIODS 1ST	Stat.	2ND	Stat.	3RD	Stat.	Rel Req	Remarks/ Comments

Examination Category: C-F-2, PRESSURE RETAINING WELDS IN CARBON OR LOW ALLOY STEEL PIPING[7,8]

C-F-2 System Totals:

System	Total Welds in System	% of Total Weld Population	Welds Scheduled	Required Welds[2]	Scheduled >= Required ?
CRD	48	4.7%	4	3.6	Yes
CS	154	15.1%	12	11.6	Yes
FW	4	0.4%	1	0.3	Yes
HPCI	162	15.9%	13	12.2	Yes
MS	4	0.4%	1	0.3	Yes
RBCCW	0	0.0%	0	0.0	Yes
RCIC	91	8.9%	7	6.8	Yes
RHR	557	54.6%	44	41.8	Yes
	1020	100.0%	82	76.5	Yes

Notes for Examination Category C-F-2:

(1) Requirements for examination of welds in piping <= NPS 4 apply to PWR high pressure safety injection systems in accordance with the exemption criteria of IWC-1220.

(2) The welds selected for examination shall include 7.5%, but not less than 28 welds, of all carbon and low alloy steel welds not exempted by IWC-1220. (Some welds not exempted by IWC-1220 are not required to be nondestructively examined per Examination Category C-F-2. These welds, however, shall be included in the total weld count to which the 7.5% sampling rate is applied.) The examinations shall be distributed as follows:

(a) the examination shall be distributed among the Class 2 systems prorated, to the degree practicable, on the number of nonexempt carbon and low alloy steel welds in each system (I.e., if a system contains 30% of the non exempt welds, then 30% of the non destructive examinations required by examination Category C-F-2 should be performed on that system);

(b) within a system, the examinations shall be distributed among terminal ends and structural discontinuities [See Note (3)] prorated, to the degree practicable, on the number of nonexempt terminal ends and structural discontinuities in that system; and

(c) within the system, examinations shall be distributed between line sizes prorated to the degree practicable.

(3) Structural discontinuities include pipe weld joints to vessel nozzles, valve bodies, pump casings, pipe fittings (such as elbows, tees, reducers, flanges, etc.,conforming to ANSI B16.9), and pipe branch connections and fittings.

(4) The welds selected for examination shall be reexamined in the same sequence during subsequent inspection intervals over the service lifetime of the piping component, to the extent practical.

(5) For circumferential welds with intersecting longitudinal welds, volumetric examination of the longitudinal piping welds is required for those portions of the welds within the examination boundaries of intersecting circumferential welds.

(6) For circumferential welds with intersecting longitudinal welds, volumetric examination of the longitudinal piping welds is required for those portions of the welds within the examination boundaires of intersecting circumferential welds. The following requirements shall also be met:

(a) When longitudinal welds are specified and locations are known, examination requirements shall be met for botyh transverse and parallel flaws at the intersection of the welds and for that length of longitduinal weld within the circumferential weld examination volume.

(b) When longitudinal welds are specified but locations are unknown, or the existence of longitudinal welds is uncertain, the examination requirements shall be met for both transverse and parallel flaws within the entire examination volume of intersecting circumferential welds.

(7) Relief Request PRR-7 applies to all Code Item Numbers and regards the Repair/Replacement Welding Program in accordance with ASME Section XI, Sub Article IWA-4150.

(8) The Category C-F-1 and C-F-2 weld sample consists of 7.5% of all welds regardless of wall thickness. The number of components identified includes welds not exempted by IWC-1220 and not required to be nondestructively examined per Examination Category C-F-1 and C-F-2.

Exam Item	Item Description	Exam Method	System	Line or Component ID	ISO No.	No. Items	No. Sch'd	INSPECTION PERIODS 1ST	Stat.	2ND	Stat.	3RD	Stat.	Rel Req	Remarks/ Comments
Examination Category: C-G, PRESSURE RETAINING WELDS IN PUMPS AND VALVES[1,2,3,4]															
C6.10	Pumps - Pump Casing Welds														
		Surf	N/A	N/A	N/A	0	0	0		0		0			
			Total Examination Item C6.10			0	0	0		0		0			
								0%		0%		0%			
C6.20	Valves - Valve Body Welds														
		Surf	CS	10-DB-14	ISI-I-14-2A	2	2	0		0		2			Selection is based on Table IWC-2500-1, Note 1
		Surf	CS	10-DB-14	ISI-I-14-2B	2	0	0		0		0			
		Surf	CS	10-GB-14	ISI-I-14-2A	2	2	2		0		0			
		Surf	CS	10-GB-14	ISI-I-14-2B	2	0	0		0		0			
			Total CS System			8	4	2		0		2			
								50%		50%		100%			
		Surf	HPCI	10-DB-23	ISI-I-23-5	2	2	0		2		0			
			Total HPCI System			2	2	0		2		0			
								0%		100%		100%			
		Surf	RHR	12-GB-10	ISI-I-10-3A	4	2	0		2		0			
		Surf	RHR	10-GL-10	ISI-I-10-4ASH2	2	2	0		0		2			
		Surf	RHR	N/A	ISI-I-10-5BSH2	2	0	0		0		0			
		Surf	RHR	N/A	ISI-I-10-3B	4	1	0		0		1			
			Total RHR System			12	5	0		2		3			
								0%		40%		100%			
			Total Examination Item C6.20			22	11	2		4		5			
								18%		55%		100%			
		Total Examination Category C-G				22	11	2		4		5			
								18%		55%		100%			

Notes for Examination Category C-G:

(1) In case of multiple pumps and valves of similar design, size, function, and service in a system, the examination of only one pump and one valve among each group of multiple pumps and valves is required.

(2) The examination may be performed from either the inside or outside surface of the component.

(3) The pumps and valves initially selected for examination shall be reexamined in the same sequence over the service lifetime of the component, to the extent practical.

(4) Relief Request PRR-7 applies to all Code Item Numbers and regards the Repair/Replacement Welding Program in accordance with ASME Section XI, Sub Article IWA-4150.

Exam Item	Item Description	Exam Method	System	Line or Component ID	ISO No.	No. Items	No. Sch'd	INSPECTION PERIODS 1ST	Stat.	2ND	Stat.	3RD	Stat.	Rel Req	Remarks/ Comments
Examination Category: C-H, ALL PRESSURE RETAINING COMPONENTS[1,2,3,4]															
C7.10	Pressure Retaining Components - System Leakage Test														
		VT-2	CACS	All	M227 Sh. 1	1	0	0		0		0			
		VT-2	CACS	All	ISI-I-50-1	1	0	0		0		0			
			Total CACS System			2	0	0		0		0			
								0%		0%		0%			
		VT-2	CRD	All	ISI-I-3-1	1	3	1		1		1			
			Total CRD System			1	3	1		1		1			
								33%		67%		100%			
		VT-2	CS	All	ISI-I-14-2A	1	0	0		0		0			
		VT-2	CS	All	ISI-I-14-2B	1	0	0		0		0			
			Total CS System			2	0	0		0		0			
								0%		0%		0%			
		VT-2	FW	All	ISI-I-6-1A	1	0	0		0		0			
			Total FW System			1	0	0		0		0			
								0%		0%		0%			
		VT-2	HPCI	All	ISI-I-23-2	1	3	1		1		1			
		VT-2	HPCI	All	ISI-I-23-3	1	3	1		1		1			
		VT-2	HPCI	All	ISI-I-23-4	1	3	1		1		1			
		VT-2	HPCI	All	ISI-I-23-4/5	1	3	1		1		1			
		VT-2	HPCI	All	ISI-I-23-5	1	0	0		0		0			
		VT-2	HPCI	All	M227 Sh. 1	1	0	0		0		0			
			Total HPCI System			6	12	4		4		4			
								33%		67%		100%			
		VT-2	IA	All	N/A	1	0	0		0		0			
			Total IA System			1	0	0		0		0			
								0%		0%		0%			
		VT-2	MS	All	ISI-I-1-1 Sh. 2	1	0	0		0		0			
			Total MS System			1	0	0		0		0			
								0%		0%		0%			

Exam Item	Item Description	Exam Method	System	Line or Component ID	ISO No.	No. Items	No. Sch'd	INSPECTION PERIODS 1ST	Stat.	2ND	Stat.	3RD	Stat.	Rel Req	Remarks/ Comments
Examination Category: C-H, ALL PRESSURE RETAINING COMPONENTS[1,2,3,4]															
C7.10	Pressure Retaining Components - System Leakage Test														
		VT-2	PASS	All	M239 Sh. 1	1	0	0		0		0			
			Total PASS System			1	0	0 0%		0 0%		0 0%			
		VT-2	RCIC	All	ISI-I-13-2	1	3	1		1		1			
		VT-2	RCIC	All	ISI-I-13-5	1	0	0		0		0			
			Total RCIC System			2	3	1 33%		1 67%		1 100%			
		VT-2	RHR	All	ISI-I-10-1C	4	0	0		0		0			
		VT-2	RHR	All	ISI-I-10-2A	2	6	2		2		2			
		VT-2	RHR	All	ISI-I-10-2B	2	6	2		2		2			
		VT-2	RHR	All	ISI-I-10-4A Sh.	6	0	0		0		0			
		VT-2	RHR	All	ISI-I-10-4B Sh.	6	0	0		0		0			
		VT-2	RHR	All	ISI-I-10-4B Sh.	2	0	0		0		0			
		VT-2	RHR	All	ISI-I-10-5B Sh.	2	0	0		0		0			
		VT-2	RHR	All	Various	25	0	0		0		0			
			Total RHR System			49	12	4 33%		4 67%		4 100%			
		VT-2	SBLC	All	ISI-I-11-1	1	0	0		0		0			
			Total SBLC System			1	0	0 0%		0 0%		0 0%			
			Total Examination Item C7.10			67	30	10 33%		10 67%		10 100%			
		Total Examination Category C-H				67	30	10 33%		10 67%		10 100%			

Notes for Examination Category C-H:

(1) Visual examination of IWA-5240.

(2) Relief Request PRR-7 applies to all Code Item Numbers and regards the Repair/Replacement Welding Program in accordance with ASME Section XI, Sub Article IWA-4150.

(3) Pressure retaining components (e.g., pressure vessels, piping, pumps and valves, etc.) that are subject to system pressure tests or hydrostatic tests are identified on the Inservice Inspection Boundary Drawings listed in Appendix E of this ISI Plan.

(4) Per IWA-5110(c), "*piping that penetrates a containment vessel is exempt from the periodic system pressure test when the piping and isolation valves perform a containment function and the balance of the piping system is outside the scope of this Division*".

Exam Item	Item Description	Exam Method	System	Line or Component ID	ISO No.	No. Items	No. Sch'd	INSPECTION PERIODS 1ST Stat.	2ND Stat.	3RD Stat.	Rel Req	Remarks/ Comments
Examination Category: D-A, WELDED ATTACHMENTS FOR VESSELS, PIPING, PUMPS, AND VALVES												
D1.10	Pressure Vessels - Welded Attachments[1,2,3,4,5]											
		VT-1	RBCCW	E209A / Rx Bldng Ht Exch Integral Attmt	ISI-E209A	4	1	0	0	1		
		VT-1	RBCCW	E209B / Rx Bldng Ht Exch Integral Attmt	ISI-E209A	4	0	0	0	0		
				Total RBCCW RB HT EX		8	1	0 0%	0 0%	1 100%		
		VT-1	RBCCW	E122A / TB Ht Exch Integral Attmt	ISI-I-E122A	1	1	0	0	1		
		VT-1	RBCCW	E122B / TB Ht Exch Integral Attmt	ISI-I-29-1SH1	1	0	0	0	0		
				Total RBCCW TB HT EX		2	1	0 0%	0 0%	1 100%		
		VT-1	RBCCW	E206A / Fuel Pool Cooling Ht Exch Integral Attmt	ISI-E206A	1	1	0	0	1		"B" Side Augmented - see Table 3.1-7.
				Total RBCCW FPC HT EX		1	1	0 0%	0 0%	1 100%		
		VT-1	MS	Torus Attachments	ISI-I-1-1SH1	4	1	0	0	1		
				Total Torus Attmt(s) MS		4	1	0 0%	0 0%	1 100%		
				Total Examination Item D1.10		15	4 27%	0 0%	0 0%	4 100%		

Exam Item	Item Description	Exam Method	System	Line or Component ID	ISO No.	No. Items	No. Sch'd	INSPECTION PERIODS 1ST Stat.	2ND Stat.	3RD Stat.	Rel Req	Remarks/ Comments
Examination Category: D-A, WELDED ATTACHMENTS FOR VESSELS, PIPING, PUMPS, AND VALVES												
D1.20	Piping - Welded Attachments[1,2,3,4,5]											
		VT-1	RBCCW	10-HE-30	ISI-I-30-2SH1	2	0	0	0	0		
		VT-1	RBCCW	12-HE-30	ISI-I-30-2SH1	5	0	0	0	0		
		VT-1	RBCCW	12-HE-30	ISI-I-30-1SH2	7	0	0	0	0		
		VT-1	RBCCW	12-HE-30	ISI-I-30-1SH1	4	0	0	0	0		
		VT-1	RBCCW	12-HE-30	ISI-I-30-2SH2	3	3	1	1	1		
		VT-1	RBCCW	16-HE-30	ISI-I-30-2SH1	3	2	2	0	0		
		VT-1	RBCCW	16-HE-30	ISI-I-30-2SH2	4	0	0	0	0		
		VT-1	RBCCW	6-HE-30	ISI-I-30-1SH1	6	0	0	0	0		
		VT-1	RBCCW	6-HE-30	ISI-I-30-2SH1	3	0	0	0	0		
		VT-1	RBCCW	8-HE-30	ISI-I-30-1SH1	4	0	0	0	0		
		VT-1	RBCCW	8-HE-30	ISI-I-30-1SH2	5	0	0	0	0		
		VT-1	RBCCW	8-HE-30	ISI-I-30-2SH1	1	0	0	0	0		
		VT-1	RBCCW	8-HE-30	ISI-I-30-4SH1	1	0	0	0	0		
		VT-1	RBCCW	8-HE-30	ISI-I-30-4SH2	1	0	0	0	0		
		VT-1	RBCCW	8-HE-30	ISI-I-30-5	2	2	0	2	0		
				Total RBCCW System		51	7	3	3	1		
							14%	43%	86%	100%		
		VT-1	SSW	6-JF-29	ISI-I-29-1SH2	2	0	0	0	0		
				Total SSW System		2	0	0	0	0		
							0%	0%	0%	0%		
				Total Examination Item D1.20		53	7	3	3	1		
							13%	43%	86%	100%		
D1.30	Pumps - Welded Attachments[1,2,3,4,5]											
		VT-1	SSW	29-P208A/E	ISI-I-29-1SH2	5	1	0	0	1		
				Total SSW System		5	1	0	0	1		
							20%	0%	0%	100%		
		VT-1	RBCCW	30-P203B/C	ISI-I-30-2SH1	2	0	0	0	0		
		VT-1	RBCCW	30-P202D/E/F	ISI-I-30-2SH2	3	0	0	0	0		
		VT-1	RBCCW	30-P202A	ISI-P202A	1	0	0	0	0		
				Total RBCCW System		6	0	0	0	0		
							0%	0%	0%	0%		
				Total Examination Item D1.30		11	1	0	0	1		
							9%	0%	0%	100%		

Exam Item	Item Description	Exam Method	System	Line or Component ID	ISO No.	No. Items	No. Sch'd	INSPECTION PERIODS 1ST Stat.	2ND Stat.	3RD Stat.	Rel Req	Remarks/ Comments
Examination Category: D-A, WELDED ATTACHMENTS FOR VESSELS, PIPING, PUMPS, AND VALVES												
D1.40	Valves - Welded Attachments[1,2,3,4,5]											
		VT-1	N/A	N/A	N/A	0	0	0	0	0		
				Total Examination Item D1.40		0	0 0%	0 0%	0 0%	0 0%		
				Total Items D1.20, D1.30, D1.40		64	8 13%	3 38%	3 75%	2 100%		10% sample required[3]
		Total Examination Category D-A				79	12 15%	3 25%	3 50%	6 100%		

Notes for Examination Category D-A:

(1) Examination is limited to those welded attachments that meet the following conditions:
(A) The attachment is on the outside surface of the pressure retaining component;
(B) The attachment provides component support as defined in NF-1110;
(C) The attachment weld joins the attachment either directly to the surface of the component or to an integrally cast or forged attachment to the component; and
(D) The attachment weld is full penetration, fillet, or partial penetration, continuous, or intermittent.

(2) The extent of the examination includes essentially 100% of the length of the attachment weld at each attachment subject to examination.

(3) Selected samples of welded attachments shall be examined each inspection interval. All welded attachments selected for examination shall be those most subject to corrosion, as determined by the Owner, such as the welded attachments of the Service Water or Emergency Service Water Systems. For multiple vessels of similar design, function and service, the welded attachments if only one of the multiple vessels shall be selected for examination. For welded attachments of piping pumps, and valves, a 10 % sample shall be selected for examination. This percentage sample shall be proprtional to the total number of nonexempt welded attachments connected to the piping, pumps, and valves in each system subject to these examinations.

(4) Examination is required whenever component support member deformation, e.g./ broken, bent, or pulled out parts, is identified during operation, refueling, maintenance, examination, or testing.

(5) Relief Request PRR-7 applies to all Code Item Number and regards the Repair/Replacement Welding Program in accordance with ASME Section XI, Sub Article IWA-4150.

Exam Item	Item Description	Exam Method	System	Line or Component ID	ISO No.	No. Items	No. Sch'd	INSPECTION PERIODS 1ST	Stat.	2ND	Stat.	3RD	Stat.	Rel Req	Remarks/ Comments
Examination Category: D-B, ALL PRESSURE RETAINING COMPONENTS															
D2.10	Pressure Retaining Components - System Leakage Test (IWD-5221)[1,2]														Pressure retaining boundary each inspection period.
		VT-2	MS	All	ISI-I-1-1 Sh. 1	1	3	1		1		1			
				Total MS System		1	3	1		1		1			
								33%		67%		100%			
		VT-2	RBCCW	All	ISI-I-30-1 Sh. 1	1	3	1		1		1			
		VT-2	RBCCW	All	ISI-I-30-1 Sh. 2	1	3	1		1		1			
		VT-2	RBCCW	All	ISI-I-30-2 Sh. 1	1	3	1		1		1			
		VT-2	RBCCW	All	ISI-I-30-2 Sh. 2	1	3	1		1		1			
		VT-2	RBCCW	All	ISI-E207A	1	3	1		1		1			
		VT-2	RBCCW	All	ISI-E207B	1	3	1		1		1			
		VT-2	RBCCW	All	ISI-E206A	1	3	1		1		1			"B" Side Augmented
		VT-2	RBCCW	All	ISI-E122A	1	3	1		1		1			
		VT-2	RBCCW	All	ISI-E122B	1	3	1		1		1			
		VT-2	RBCCW	All	ISI-E209A	1	3	1		1		1			
		VT-2	RBCCW	All	ISI-E209B	1	3	1		1		1			
		VT-2	RBCCW	All	ISI-I-29-1 Sh. 1	1	3	1		1		1			
		VT-2	RBCCW	All	ISI-P202A	1	3	1		1		1			
		VT-2	RBCCW	All	ISI-P202B	1	3	1		1		1			
		VT-2	RBCCW	All	ISI-P202C	1	3	1		1		1			
		VT-2	RBCCW	All	ISI-P202D	1	3	1		1		1			
		VT-2	RBCCW	All	ISI-P202E	1	3	1		1		1			
		VT-2	RBCCW	All	ISI-P202F	1	3	1		1		1			
				Total RBCCW System		18	54	18		18		18			
								33%		67%		100%			
		VT-2	SSW	All	ISI-I-29-1 Sh. 1	2	0	0		0		0			
		VT-2	SSW	All	ISI-I-29-1 Sh. 2	2	0	0		0		0			
				Total SSW System		4	0	0		0		0			
								0%		0%		0%			
		Total Examination Item D2.10				23	57	19		19		19			
								33%		67%		100%			

Exam Item	Item Description	Exam Method	System	Line or Component ID	ISO No.	No. Items	No. Sch'd	INSPECTION PERIODS 1ST	Stat.	2ND	Stat.	3RD	Stat.	Rel Req	Remarks/ Comments
Examination Category; D-B, ALL PRESSURE RETAINING COMPONENTS															
D2.20	Pressure Retaining Components - System Hydrostatic Test (IWD-5222)[1,2,3,4]	VT-2	RBCCW	All	ALL	1	3	1		1		1			Pressure retaining boundary each inspection interval. Examinations will be performed IAW ASME Section XI 2001 Edition, through 2003 Addenda (see PIL-05-R-003).
			Total RBCCW System			1	3	1 33%		1 67%		1 100%			
		VT-2	MS	All	ISI-I-1-1 Sh. 1	1	3	1		1		1			Examinations will be performed IAW ASME Section XI 2001 Edition, through 2003 Addenda (see PIL-05-R-
			Total MS System			1	3	1 33%		1 67%		1 100%			
		VT-2	RBCCW	All	All	1	3	1		1		1			Examinations will be performed IAW ASME Section XI 2001 Edition, through 2003 Addenda (see PIL-05-R-
			Total RBCCW System			1	3	1 33%		1 67%		1 100%			
		VT-2	SSW	All	All	1	3	1		1		1			Examinations will be performed IAW ASME Section XI 2001 Edition, through 2003 Addenda (see PIL-05-R-
			Total SSW System			1	3	1 33%		1 67%		1 100%			
			Total Examination Item D2.20			4	12	4 33%		4 67%		4 100%			
		Total Examination Category D-B				27	69	23 33%		23 67%		23 100%			

Notes for Examination Category D-B:

(1) Pressure retaining components (e.g., pressure vessels, piping, pumps and valves, etc.) that are subject to system pressure tests or hydrostatic tests are identified on the Inservice Inspection Boundary Drawings listed in Appendix E of this ISI Plan. The system boundary, with a limited number of exceptions, extends up to and including the first normally closed valve or valve capable of automatic closure as required to perform safety-related system function.

(2) Relief Request PRR-7 applies to all Code Item Number and regards the Repair/Replacement Welding Program in accordance with ASME Section XI, Sub Article IWA-4150.

(3) The system hydrostatic test (IWD-5222) shall be conducted at or near the end of each inspection interval or during the same inspection period of each inspection interval of Inspection Program B.

(4) Per 10CFR50.55a Request Number PIL-05-R-003, Entergy proposes to use Table IWD-2500-1 for Examination Category D-B from the 2001 Edition, through the 2003 Addenda, in place of the 1998 Edition, through the 2000 Addenda, for all Class 3 system pressure test requirements. The 1998 Edition, through the 2000 Addenda requires a system hydrostatic test with a VT-2 examination of all Class 3 pressure retaining components under Item No. D2.20, each inspection interval. This requirement and Item No. D2.20 have been deleted in their entirety from the 2001 Edition, 2003 Addenda.

TABLE 3.1-4
ISI CLASS MC COMPONENTS (IWE) SUMMARY TABLE

Exam Item	Item Description	Exam Method	System	Line or Component ID	ISO No.	No. Items	No. Sch'd	INSPECTION PERIODS 1ST	Stat.	2ND	Stat.	3RD	Stat.	Rel Req	Remarks / Comments
Examination Category: E-A, Containment Surfaces[4]															
E1.11	Containment Vessel Pressure Retaining Boundary - Accessible Surface Areas	General Visual[5]	CONT	Various	N/A	1	1	1		1		1			Drywell, Drywell Head, and Torus. Once per Period.
E1.11	Pressure Retaining Bolted Connection	VT-3	CONT	Various	N/A	35	35	0		0		35			Once per interval per 10CFR50.55a(b)(2)(ix)(G).
E1.12	Containment Vessel Pressure Retaining Boundary - Wetted Surfaces of Submerged Areas	General Visual[6]	CONT	Various	N/A	1	1	0		0		1			Drywell, Drywell Head, and Torus. Once per interval per 10CFR50.55a(b)(2)(ix)(G)
E1.20	BWR Vent System - Accessible Surface Areas [1,2]	General Visual[7]	CONT	Torus	N/A	1	1	0		0		1			Vent Piping, Ring Header, and Downcomer Pipes. Once per interval per 10CFR50.55a(b)(2)(ix)(G).
E1.30	Moisture Barriers [3]	General Visual[8]	CONT	Torus	N/A	0	0	0		0		0			
			Total CONT System			38	38	1		1		38			
			Total Examination Category E-A			38	38	1		1		38			

Exam Item	Item Description	Exam Method	System	Line or Component ID	ISO No.	No. Items	No. Sch'd	INSPECTION PERIODS 1ST Stat.	2ND Stat.	3RD Stat.	Rel Req	Remarks / Comments

Examination Category: E-A, Containment Surfaces[4]

Notes for Examination Category E-A:

(1) Examination shall include all accessible interior and exterios surfaces of class MC components, parts, and appurtenances and metallic shell and penetration liners of class CC components. The following items shall be considered for examination:
(a) Integral attachment and structures that are part of reinforcing structure, such as stiffening rings, manhole frames and reinforcement around openings.
(b) surfaces of attachment welds between structural attachments and pressure retaining boundary or reinforcing structure, except for nonstructural or temporary attachments as defined in NE-4435 and minor permanent attachments as defined in CC-4543.4.
(c) surfaces of containment structural and pressure boundary welds, including longitudional welds (Category A), circumferential welds (category B) flange welds (Category C) and nozzle-to-shell welds (Category D) as defined in NE-3351 for class MC and CC-3840 for for class CC; and surfaces of Flued Head and Bellows Seals circumferential Welds joined to the penetration.
(d) pressure-retaining bolted connections, including bolts, studs, nuts, bushings, washers, and rhreads in base material and flange ligaments between fastener holes. Bolted connections need not be disassembled for performance of examinations, and bolting may remain in place under tension.

(2) Includes flow chanelling devices within containment vessels.

(3) Examination shall include moisture barrier materials intended to prevent intrusion of moisture against inaccessible areas of the pressure retaining metal containment shell or liner at concrete to metal interfaces and at metal to metal interfaces which are not seal welded. Containment moisture barrier materials include caulking, flashing, and other sealtants used for this application.

(4) Relief Request PRR-7 applies to all Code Item Numbers and regards the Repair/Replacement Welding Program in accordance with ASME Section XI, Sub Article IWA-4150.

(5) General Visual. Shall be performed once each period. Submerged or insulated surfaces are not included within the scope of the General Visual Examination.

(6) General Visual. Shall be performed at the close of the 10-year inspection interval. Submerged or insulated surfaces shall be examined only to the extent required to achieve coverage of 80% of accessible surfaces.

(7) General Visual. Shall be performed at the close of the 10-year inspection interval.

(8) General Visual. The interior moisture barrier thought to be located at Drywell El. 9' between the Drywell shell and the concrete floor was examined during RFO #12. It was determined during this initial examination that a barrier does not exist, nor is one required at the 9' elevation. No further examinations will be made at this location. The exterior moisture barrier above the Drywell sand cushion area is inaccessible.

Exam Item	Item Description	Exam Method	System	Line or Component ID	ISO No.	No. Items	No. Sch'd	INSPECTION PERIODS 1ST	Stat.	2ND	Stat.	3RD	Stat.	Rel Req	Remarks / Comments
Examination Category: E-C, Containment Surfaces Requiring Augmented Examination[3]															
E4.11	Containment Surface Areas - Visible Surfaces [1,9]	Detailed Visual[4,5,6]	CONT	N/A	ISI-IWE-AUG-1	12	12	12		0		0			Vent Piping, Annulus Drain Lines, and Spent Fuel, Dryer / Separator Pool, and Reactor Cavity.
			CONT	N/A	ISI-IWE-AUG-2	1	1	1		0		0			
E4.12	Containment Surface Areas - Surface Area Grid - Gridline Intersections and Minimum Wall Thickness Location [9]	UT[7,8]	CONT	Various	N/A	18	18	18		0		0			Torus Shell and Upper Drywell Shell.
			Total CONT System			31	31	31		0		0			
			Total Examination Category E-C			31	31	31		0		0			

Notes for Examination Category E-C:

(1) Containment surface areas requiring augmented examination are those identifired in IWE-1240.

(2) The extent of the examination shall be 100% for each inspection period until the areas examined remain essentially unchanged for the next inspection period. Such areas no longer require augmented examination in accordance with IWE-2420(c).

(3) Relief Request PRR-7 applies to all Code Item Numbers and regards the Repair/Replacement Welding Program in accordance with ASME Section XI, Sub Article IWA-4150.

(4) **Vent Piping:** Detailed Visual. Zone of examination is the 1 sq. ft. area at the lowest elevation of each vent pipe.

(5) **Annulus Drain Lines:** Detailed Visual. Performed on four pairs of drains after Reactor Cavity flood-up and before drain-down during each refuel outage.

(6) **Spent Fuel, Dryer / Separator Pool, and Reactor Cavity:** Detailed Visual. Performed on drain locations on the Reactor Building 74' elevation once each period while flooded up.

(7) **Torus Shell:** Test areas will be 1 square foot locations centered 6 feet above the Torus Room floor and furthermost from the Reactor Vessel centerline in Torus Room bays 1, 5, 9, and 13. Additionally, a 1 square foot section centered on the Torus mean water level (elev. -2 ft 7 in.) will be examined in the same bays. Examinations shall be performed once each period.

(8) **Upper Drywell Shell:** An area 6 ft tall by 3 in. wide shall be examined at two locations (azimuths 252 and 288 degrees) between the 72' and 77' elevations adjacent to the Spent Fuel Pool. Examinations shall be performed once per period during the 4th ISI Interval.

(9) All First Ten-Year Interval IWE Inspections that were not completed during the First IWE Interval will be completed during the 1st Period of the 4th ISI Interval using the 1998 Code and 2000 Addenda.

TABLE 3.1-5
ISI CLASS 1, 2, 3, AND MC COMPONENT SUPPORTS (IWF) SUMMARY TABLE

Exam Item	Item Description	Exam Method	System	Line or Component ID	ISO No.	No. Items	No. Sch'd	INSPECTION PERIODS 1ST	Stat.	2ND	Stat.	3RD	Stat.	Rel Req	Remarks/ Comments
Examination Category: F-A, SUPPORTS[1,4,5,6]															
F1.10A	Class 1 Piping Supports - One-Directional Rod Hangers-[2,6]	Visual VT-3													
		VT-3	RECIRC	N/A	N/A	0	0	0		0		0			
				Total RECIRC		0	0	0 0%		0 0%		0 0%			
		VT-3	RHR	20-EL-10	ISI-I-10-1A	1	1	0		1		0			
				Total RHR		1	1	0 0%		1 100%		0 100%			
		VT-3	RWCU	6-DL-12	ISI-I-12-2	1	1	0		0		1			
				Total RWCU		1	1	0 0%		0 0%		1 100%			
		VT-3	RCIC	4-DB-13	ISI-I-13-1	3	1	0		1		0			
				Total RCIC		3	1	0 0%		1 100%		0 100%			
		VT-3	CS	N/A	N/A	0	0	0		0		0			
				Total CS		0	0	0 0%		0 0%		0 0%			
		VT-3	HPCI	14-DB-23	ISI-I-23-1	1	1	0		1		0			
				Total HPCI		1	1	0 0%		1 100%		0 100%			
		VT-3	MS	N/A	N/A	0	0	0		0		0			
				Total MS		0	0	0 0%		0 0%		0 0%			
		VT-3	FW	18-DL-6	ISI-I-6-1A	1	1	0		1		0			
				Total FW		1	1	0 0%		1 100%		0 100%			
		VT-3	SBLC	ISI-I-11-1	1 1/2-DC-11	1	1	0		1		0			
				Total SBLC		1	1	0 0%		1 100%		0 100%			
				Total Class 1 (F1.10A)		8	6	0 0%		5 83%		1 100%			

TABLE 3.1-5
ISI CLASS 1, 2, 3, AND MC COMPONENT SUPPORTS (IWF) SUMMARY TABLE

Exam Item	Item Description	Exam Method	System	Line or Component ID	ISO No.	No. Items	No. Sch'd	INSPECTION PERIODS 1ST	Stat.	2ND	Stat.	3RD	Stat.	Rel Req	Remarks/ Comments
Examination Category: F-A, SUPPORTS[1,4,5,6]															
F1.10B	Class 1 Piping Supports - Multi-Directional Rod Restraints-[2,6]	Visual VT-3													
		VT-3	RECIRC	2-DCA-2	ISI-I-2R-A	1	1	0		1		0			
				2-DCA-2	ISI-I-2R-B	1	0	0		0		0			
				Total RECIRC		2	1	0		1		0			
								0%		100%		100%			
		VT-3	RHR	18-DC-10	ISI-I-10-1	1	0	0		0		0			
				N/A	ISI-I-10-1	1	1	0		0		1			
				20-EL-10	ISI-I-10-1A	1	0	0		0		0			
				Total RHR		3	1	0		0		1			
								0%		0%		100%			
		VT-3	RWCU	4-DA-12	ISI-I-12-2	10	2	0		1		1			
				6-EA-12	ISI-I-12-1SH1	3	0	0		0		0			
				6-DL-6	ISI-I-12-2	1	1	0		1		0			
				2-DCA-12	ISI-I-12-1SH2	4	1	0		0		1			
				N/A	ISI-I-12-1SH2	1	1	0		1		0			
				6-DCA-12	ISI-I-12-1SH1	1	0	0		0		0			
				2-DB-4	ISI-I-12-1SH2	2	0	0		0		0			
				Total RWCU		22	5	0		3		2			
								0%		60%		100%			
		VT-3	RCIC	3-EB-13	ISI-I-13-1	2	1	0		1		0			
				4-DB-13	ISI-I-13-1	2	0	0		0		0			
				Total RCIC		4	1	0		1		0			
								0%		100%		100%			
		VT-3	CS	10-DC-14	ISI-I-14-1	2	0	0		0		0			
				Total CS		2	0	0		0		0			
								0%		0%		0%			
		VT-3	HPCI	14-DB-23	ISI-I-23-1	4	0	0		0		0			
				10-EB-23	ISI-I-23-1	1	0	0		0		0			
				Total HPCI		5	0	0		0		0			
								0%		0%		0%			
		VT-3	MS	20-EB-1	ISI-I-1-1SH2	4	1	0		1		0			
				3-EL-1	ISI-I-1-1SH2	1	1	0		1		0			
				Total MS		5	2	0		2		0			
								0%		100%		100%			
		VT-3	FW	18-DL-6	ISI-I-6-1A	1	0	0		0		0			
				18-DL-6	ISI-I-6-1	2	1	0		1		0			
				Total FW		3	1	0		1		0			

Exam Item	Item Description	Exam Method	System	Line or Component ID	ISO No.	No. Items	No. Sch'd	INSPECTION PERIODS 1ST	Stat.	2ND	Stat.	3RD	Stat.	Rel Req	Remarks/ Comments
Examination Category: F-A, SUPPORTS[1,4,5,6]															
F1.10B		VT-3	SBLC	ISI-I-11-1	1 1/2-DC-11	23	6	3		3		0			
				Total SBLC		23	6	3		3		0			
								50%		100%		100%			
				Total Class 1 (F1.10B)		69	17	3		11		3			
								18%		82%		100%			
F1.10C	Class 1 Piping Supports - Permitting Thermal Movement-[2,6]	Visual VT-3													
		VT-3	RECIRC	12-DCA-2	ISI-I-2R-A	2	1	1		0		0			
				12-DCA-2	ISI-I-2R-B	2	0	0		0		0			
				22-DCA-2	ISI-I-2R-A	0	0	0		0		0			
				22-DCA-2	ISI-I-2R-B	0	0	0		0		0			
				28-DCA-2	ISI-I-2R-A	7	3	2		0		1			
				28-DCA-2	ISI-I-2R-B	7	0	0		0		0			
				Total RECIRC		18	4	3		0		1			
								75%		75%		100%			
		VT-3	RHR	18-DCA-10	ISI-I-10-1	6	1	0		0		1			
				20-DCA-10	ISI-I-10-1A	3	1	0		0		1			
				Total RHR		9	2	0		0		2			
								0%		0%		100%			
		VT-3	RWCU	6-DCA-12	ISI-I-12-1SH1	4	1	1		0		0			
				4-EA-12	ISI-I-12-2	1	0	0		0		0			
				4-DA-12	ISI-I-12-2	3	1	1		0		0			
				6-EA-12	ISI-I-12-1SH1	1	0	0		0		0			
				6-DL-12	ISI-I-12-2	1	0	0		0		0			
				Total RWCU		10	2	2		0		0			
								100%		100%		100%			
		VT-3	RCIC	3-EB-13	ISI-I-13-1	2	1	0		1		0			
				4-DB-13	ISI-I-13-1	2	0	0		0		0			
				Total RCIC		4	1	0		1		0			
								0%		100%		100%			
		VT-3	CS	10-DBA-14	ISI-I-14-1	4	1	0		1		0			
				Total CS		4	1	0		1		0			
								0%		100%		100%			
		VT-3	HPCI	14-DB-23	ISI-I-23-1	2	1	0		1		0			
				10-EB-23	ISI-I-23-1	3	1	0		1		0			
				10-EB-23/14-DB-23	ISI-I-23-1	0	0	0		0		0			
				Total HPCI		5	2	0		2		0			
								0%		100%		100%			

TABLE 3.1-5
ISI CLASS 1, 2, 3, AND MC COMPONENT SUPPORTS (IWF) SUMMARY TABLE

Exam Item	Item Description	Exam Method	System	Line or Component ID	ISO No.	No. Items	No. Sch'd	INSPECTION PERIODS 1ST	Stat.	2ND	Stat.	3RD	Stat.	Rel Req	Remarks/ Comments
Examination Category: F-A, SUPPORTS[1,4,5,6]															
F1.10C	Class 1 Piping Supports - Permitting Thermal Movement-[2,6]	VT-3	MS	20-EB-1	ISI-I-1-1SH1	14	5	1		2		2			
				Total MS		14	5	1 20%		2 60%		2 100%			
		VT-3	FW	12-DL-6	ISI-I-6-1	12	3	0		1		2			
				18-DL-6	ISI-I-6-1	2	1	0		0		1			
				Total FW		14	4	0 0%		1 25%		3 100%			
		VT-3	SBLC	ISI-I-11-1	1 1/2-DC-11	1	0	0		0		0			
				Total SBLC		1	0	0 0%		0 0%		0 0%			
				Total Class 1 (F1.10C)		79	21	6 29%		7 62%		8 100%			
			Total Class 1 (F1.10A+F1.10B+F1.10C)			156	44 28%	9 20%		23 73%		12 100%			25% of Class 1 required

Exam Item	Item Description	Exam Method	System	Line or Component ID	ISO No.	No. Items	No. Sch'd	INSPECTION PERIODS 1ST	Stat.	2ND	Stat.	3RD	Stat.	Rel Req	Remarks/ Comments
Examination Category: F-A, SUPPORTS[1,4,5,6]															
F1.10(S)	Class 1 Snubber Attachments-[7]	Visual VT-3				56	14	5		4		5			
								36%		64%		100%			
				Total Class 1 [F1.10(S)]		56	14	5		4		5			
							25%	36%		64%		100%			25% of Class 1 required

Exam Item	Item Description	Exam Method	System	Line or Component ID	ISO No.	No. Items	No. Sch'd	INSPECTION PERIODS 1ST Stat.	2ND Stat.	3RD Stat.	Rel Req	Remarks/ Comments
Examination Category: F-A, SUPPORTS[1,4,5,6]												
F1.20A	Class 2 Piping Supports - One-Directional Rod Hangers-[7,8]	Visual VT-3										
		VT-3	CRD	6-EB-3	ISI-I-3-1	14	1	0	0	1		
				Total CRD		14	1	0 0%	0 0%	1 100%		
		VT-3	RHR	18-GB-10	ISI-I-10-4BSH1	8	1	1	0	0		
				18-GB-10	ISI-I-10-4ASH2	2	0	0	0	0		
				18-GB-10	ISI-I-10-3A	1	0	0	0	0		
				18-GB-10	ISI-I-10-3B	1	0	0	0	0		
				18-DB-10	ISI-I-10-4ASH2	1	1	1	0	0		
				10-GB-10	ISI-I-10-5BSH2	3	1	1	0	0		
				12-GB-10	ISI-I-10-4BSH2	8	1	0	0	1		
				20-HB-10	ISI-I-10-1B	6	0	0	0	0		
				6-HL-10	ISI-I-10-4ASH1	1	0	0	0	0		
				12-HL-10	ISI-I-10-4ASH1	1	0	0	0	0		
				12-HL-10	ISI-I-10-5BSH1	1	1	1	0	0		
				Total RHR		33	5	4 80%	0 80%	1 100%		
		VT-3	RCIC	8-HB-13	ISI-I-13-3	1	0	0	0	0		
				6-HE-26	ISI-I-13-4	1	0	0	0	0		
				6-HE-26	ISI-I-13-5	3	1	0	0	1		
				Total RCIC		5	1	0	0	1		
		VT-3	CS	10-GB-14	ISI-I-14-2A	3	0	0	0	0		
				10-GB-14	ISI-I-14-2B	1	1	1	0	0		
				Total CS		4	1	1 100%	0 100%	0 100%		

TABLE 3.1-5

ISI CLASS 1, 2, 3, AND MC COMPONENT SUPPORTS (IWF) SUMMARY TABLE

Exam Item	Item Description	Exam Method	System	Line or Component ID	ISO No.	No. Items	No. Sch'd	INSPECTION PERIODS 1ST	Stat.	2ND	Stat.	3RD	Stat.	Rel Req	Remarks/ Comments
Examination Category: F-A, SUPPORTS[1,4,5,6]															
F1.20A	Class 2 Piping Supports - One-Directional Rod Hangers-[2,6]	VT-3	RBCCW	N/A	N/A	0	0	0		0		0			
				Total RBCCW		0	0	0 0%		0 0%		0 0%			
		VT-3	HPCI	10-EB-23	ISI-I-23-2	1	0	0		0		0			
				14-DB-23	ISI-I-23-5	1	1	0		0		1			
				Total HPCI		2	1	0 0%		0 0%		1 100%			
		VT-3	MS	20-EB-1	ISI-I-1-1SH2	4	1	1		0		0			
				20-EE-1	ISI-I-1-1SH2	2	0	0		0		0			
				Total MS		6	1	1 100%		0 100%		0 100%			
				Total Class 2 (F1.20A)		64	10	6		0		4			

TABLE 3.1-5
ISI CLASS 1, 2, 3, AND MC COMPONENT SUPPORTS (IWF) SUMMARY TABLE

Exam Item	Item Description	Exam Method	System	Line or Component ID	ISO No.	No. Items	No. Sch'd	INSPECTION PERIODS 1ST	Stat.	2ND	Stat.	3RD	Stat.	Rel Req	Remarks/ Comments
Examination Category: F-A, SUPPORTS[1,4,5,6]															
F1.20B	Class 2 Piping Supports - Multi-Directional Restraints[-2,8]	Visual VT-3													
		VT-3	CRD	6-EB-3	ISI-I-3-1	17	3	0		2		1			
				12-EB-3	ISI-I-3-1	2	1	0		0		1			
				Total CRD		19	4	0		2		2			
		VT-3	RHR	10-GB-10	ISI-I-10-5BSH2	7	2	2		0		0			
				10-GB-10	ISI-I-10-4ASH2	1	0	0		0		0			
				6-HB-10	ISI-I-10-1C	4	1	1		0		0			
				N/A	ISI-I-10-5BSH1	1	1	0		1		0			
				6-HL-10	ISI-I-10-5BSH1	4	1	0		0		1			
				6-HL-10	ISI-I-10-4ASH1	5	1	0		1		0			
				8-GBB-10	ISI-I-10-4BSH2	1	0	0		0		0			
				16-GB-10	ISI-I-10-3B	2	1	0		0		1			
				18-HB-10	ISI-I-10-1B	3	1	0		0		1			
				18-HB-10	ISI-I-10-2B	2	1	0		0		1			
				18-HB-10	ISI-I-10-2A	2	1	0		0		1			
				18-HL-10	ISI-I-10-2A	12	1	0		1		0			
				18-HL-10	ISI-I-10-2B	12	1	0		0		1			
				18-GB-10	ISI-I-10-4BSH1	11	1	0		0		1			
				18-GB-10	ISI-I-10-4ASH2	1	0	0		0		0			
				18-GB-10	ISI-I-10-3A	2	0	0		0		0			
				18-GB-10	ISI-I-10-3B	3	1	0		0		1			
				20-HB-10	ISI-I-10-1B	10	2	0		2		0			
				12-HL-10	ISI-I-10-5BSH1	6	1	0		1		0			
				12-HL-10	ISI-I-10-4ASH1	2	1	0		0		1			
				12-GB-10	ISI-I-10-4ASH1	2	0	0		0		0			
				12-GB-10	ISI-I-10-5BSH1	2	0	0		0		0			
				12-GB-10	ISI-I-10-5BSH2	1	0	0		0		0			
				12-GB-10	ISI-I-10-4BSH1	1	1	0		1		0			
				12-GB-10	ISI-I-10-4BSH2	5	0	0		0		0			
				12-GB-10	ISI-I-10-3A	2	1	0		0		1			
				12-GB-10	ISI-I-10-3B	2	0	0		0		0			
				Total RHR		106	20	3		7		10			
		VT-3	RCIC	6-HL-13	ISI-I-13-2	2	0	0		0		0			
				8-HL-13	ISI-I-13-3	3	1	1		0		0			
				6-HD-13	ISI-I-13-2	5	1	0		1		0			
				6-HE-26	ISI-I-13-5	3	1	0		0		1			
				6-HE-26	ISI-I-13-4	6	0	0		0		0			
				Total RCIC		19	3	1		1		1			
								33%		67%		100%			

Exam Item	Item Description	Exam Method	System	Line or Component ID	ISO No.	No. Items	No. Sch'd	INSPECTION PERIODS 1ST	Stat.	2ND	Stat.	3RD	Stat.	Rel Req	Remarks/ Comments
Examination Category: F-A, SUPPORTS[1,4,5,6]															
F1.20B	Class 2 Piping Supports - Multi-Directional Restraints-[2,6]														
		VT-3	CS	10-GB-14	ISI-I-14-2A	10	2	1		1		0			
				10-GB-14	ISI-I-14-2B	6	1	0		0		1			
				10-DB-14	ISI-I-14-2B	1	0	0		0		0			
				6-HD-14	ISI-I-14-2B	1	0	0		0		0			
				12-HE-26	ISI-I-14-2A	2	1	0		1		0			
				12-HE-26	ISI-I-14-2B	2	0	0		0		0			
				18-HD-14	ISI-I-14-2A	2	1	0		1		0			
				18-HD-14	ISI-I-14-2B	3	1	0		0		1			
				18-HL-14	ISI-I-14-2A	7	1	0		1		0			
				18-HL-14	ISI-I-14-2B	6	0	0		0		0			
				Total CS		40	7	1		4		2			
								14%		71%		100%			
		VT-3	RBCCW	N/A	N/A	0	0	0		0		0		RR-2	
				Total RBCCW		0	0	0		0		0			
								0%		0%		0%			
		VT-3	HPCI	10-EB-23	ISI-I-23-2	5	1	1		0		0		RR-2	
				10-DB-23	ISI-I-23-5	4	1	0		1		0			
				16-HD-23	ISI-I-23-4	5	1	0		1		0			
				16-HE-26	ISI-I-23-4	1	0	0		0		0			
				16-HL-23	ISI-I-23-4	4	1	0		1		0			
				20-HB-23	ISI-I-23-3	2	0	0		0		0			
				24-HL-23	ISI-I-23-3	1	0	0		0		0			
				14-EB-23	ISI-I-23-5	2	1	0		1		0			
				14-DB-23	ISI-I-23-1	2	0	0		0		0			
				14-DB-23	ISI-I-23-5	2	0	0		0		0		RR-2	
				Total HPCI		28	5	1		4		0			
		VT-3	MS	20-EE-1	ISI-I-1-1SH2	2	0	0		0		0			
				3-EL-1	ISI-I-1-1SH2	1	1	0		1		0			
				Total MS		3	1	0		1		0			
		VT-3	FW	16-DE-6	ISI-I-6-1A	2	0	0		0		0			
				16-DL-6	ISI-I-6-1A	2	1	0		1		0			
				Total FW		4	1	0		1		0			
		VT-3	CACS	20-HM-45	ISI-I-50-1	6	1	0		1		0			
				Total CACS		6	1	0		1		0			
				Total Class 2 (F1.20B)		222	41	6		20		15			

Exam Item	Item Description	Exam Method	System	Line or Component ID	ISO No.	No. Items	No. Sch'd	INSPECTION PERIODS 1ST	Stat.	2ND	Stat.	3RD	Stat.	Rel Req	Remarks/ Comments
Examination Category: F-A, SUPPORTS[1,4,5,6]															
F1.20C	Class 2 Piping Supports - Permitting Thermal Movement-[2,6]	Visual VT-3													
		VT-3	CRD	6-EB-3	ISI-I-3-1	1	1	0		1		0			
				Total CRD		1	1	0		1		0			
		VT-3	RHR	20-HB-10	ISI-I-10-1B	7	1	0		0		1			
				6-HB-10	ISI-I-10-1C	6	1	1		0		0			
				16-GB-10	ISI-I-10-3A	2	1	0		1		0			
				16-GB-10	ISI-I-10-3B	2	0	0		0		0			
				18-HB-10	ISI-I-10-2A	2	1	0		1		0			
				18-HB-10	ISI-I-10-1B	4	1	0		0		1			
				18-HB-10	ISI-I-10-2B	2	1	0		1		0			
				18-GB-10	ISI-I-10-4BSH1	5	1	0		0		1			
				18-GB-10	ISI-I-10-4ASH2	1	0	0		0		0			
				18-GB-10	ISI-I-10-3A	2	0	0		0		0			
				18-GB-10	ISI-I-10-3B	0	0	0		0		0			
				10-GL-10	ISI-I-10-4ASH2	1	0	0		0		0			
				10-GL-10	ISI-I-10-5BSH2	2	0	0		0		0			
				10-GB-10	ISI-I-10-5BSH2	5	1	0		0		1			
				10-GB-10	ISI-I-10-4ASH2	5	1	0		1		0			
				10-GB-10	ISI-I-10-4ASH1	1	0	0		0		0			
				12-GB-10	ISI-I-10-4ASH1	1	1	0		0		1			
				12-GB-10	ISI-I-10-4ASH2	2	0	0		0		0			
				12-GB-10	ISI-I-10-4BSH2	1	1	0		0		1			
				12-GB-10	ISI-I-10-3A	2	0	0		0		0			
				12-GB-10	ISI-I-10-3B	2	1	0		0		1			
				12-HL-10	ISI-I-10-4ASH1	3	0	0		0		0			
				Total RHR		58	12	1		4		7			
		VT-3	RCIC	6-HD-13	ISI-I-13-2	1	0	0		0		0		RR-2	
				8-HL-13	ISI-I-13-3	4	1	1		0		0			
				Total RCIC		5	1	1		0		0			
		VT-3	CS	10-GB-14	ISI-I-14-2A	2	0	0		0		0		RR-2	
				10-GB-14	ISI-I-14-2B	3	0	0		0		0			
				6-GB-14	ISI-I-14-2A	1	1	0		1		0			
				Total CS		6	1	0		1		0			
		VT-3	RBCCW	N/A	N/A	0	0	0		0		0		RR-2	
				Total RBCCW		0	0	0		0		0			

Exam Item	Item Description	Exam Method	System	Line or Component ID	ISO No.	No. Items	No. Sch'd	INSPECTION PERIODS 1ST	Stat.	2ND	Stat.	3RD	Stat.	Rel Req	Remarks/ Comments
Examination Category: F-A, SUPPORTS[1,4,5,6]															
F1.20C	Class 2 Piping Supports - Permitting Thermal Movement-[2,6]														
		VT-3	HPCI	14-DB-23	ISI-I-23-5	3	0	0		0		0			
				14-EB-23	ISI-I-23-5	3	1	0		1		0			
				10-EB-23	ISI-I-23-2	6	1	0		0		1			
				16-HE-26	ISI-I-23-4	2	1	0		0		1			
				16-HD-23	ISI-I-23-4	1	0	0		0		0			
				20-HB-23	ISI-I-23-3	2	1	1		0		0			
				24-HL-23	ISI-I-23-3	0	0	0		0		0			
				Total HPCI		17	4	1		1		2			
		VT-3	CACS	20-HM-45	ISI-I-50-1	3	1	0		1		0			
				Total CACS		3	1	0		1		0			
				Total Class 2 (F1.20C)		90	20	3		8		9			
			Total Class 2 (F1.20A+F1.20B+F1.20C)			376	71	15		28		28			
							19%	21%		61%		100%			15% of Class 2 required

Exam Item	Item Description	Exam Method	System	Line or Component ID	ISO No.	No. Items	No. Sch'd	INSPECTION PERIODS 1ST	Stat.	2ND	Stat.	3RD	Stat.	Rel Req	Remarks/ Comments
Examination Category: F-A, SUPPORTS[1,4,5,6]															
F1.20(S)	Class 2 Snubber Attachments-[7]	Visual VT-3													
		VT-3	RHR	16-GB-10	ISI-I-10-3A	1	0	0		0		0			
				18-GB-10	ISI-I-10-4BSH1	1	0	0		0		0			
				18-GB-10	ISI-I-10-3B	1	0	0		0		0			
				Total RHR		3	0	0		0		0			
			HPCI	10-EB-23	ISI-I-23-2	3	0	0		0		0			
				20-HB-23	ISI-I-23-3	4	1	1		0		0			
				24-HL-23	ISI-I-23-3	1	1	0		1		0			
				Total HPCI		8	2	1		1		0			
				Total Class 2 [F1.20(S)]		11	2	1		1		0			
							18%	50%		100%		100%			15% of Class 2 required

TABLE 3.1-5
ISI CLASS 1, 2, 3, AND MC COMPONENT SUPPORTS (IWF) SUMMARY TABLE

Exam Item	Item Description	Exam Method	System	Line or Component ID	ISO No.	No. Items	No. Sch'd	INSPECTION PERIODS 1ST	Stat.	2ND	Stat.	3RD	Stat.	Rel Req	Remarks/ Comments
Examination Category: F-A, SUPPORTS[1,4,5,6]															
F1.30A	Class 3 Piping Supports - One-Directional Rod Hangers-[2,6]	Visual VT-3													
		VT-3	SSW	18-JF-29	ISI-I-29-1SH1	8	1	0		1		0			
				12-JF-29	ISI-I-29-1SH1	2	0	0		0		0			
				12-JF-29	ISI-I-29-1SH2	2	1	0		0		1			
				22-JF-29	ISI-I-29-1SH1	2	0	0		0		0			
				22-JH-29	ISI-I-29-1SH2	1	0	0		0		0			
				22-JF-29	ISI-I-29-1SH2	4	1	0		1		0			
				Total SSW		19	3	0		2		1			
								0%		67%		100%			
		VT-3	RBCCW	14-HE-30	ISI-I-30-1SH2	1	0	0		0		0			
				12-HE-30	ISI-I-30-1SH2	4	1	0		1		0			
				12-HE-30	ISI-I-30-1SH1	4	0	0		0		0			
				12-HE-30	ISI-I-30-2SH1	7	1	0		1		0			
				6-HE-30	ISI-I-30-1SH1	0	0	0		0		0			
				8-HE-30	ISI-I-30-2SH1	1	0	0		0		0			
				16-HE-30	ISI-I-30-2SH2	1	0	0		0		0			
				16-HE-30	ISI-I-30-2SH1	2	1	0		1		0			
				10-HE-30	ISI-I-30-2SH1	2	0	0		0		0			
				Total RBCCW		22	3	0		3		0			
								0%		100%		100%			
				Total Class 3 (F1.30A)		41	6	0		5		1			
								0%		83%		100%			

Exam Item	Item Description	Exam Method	System	Line or Component ID	ISO No.	No. Items	No. Sch'd	INSPECTION PERIODS 1ST	Stat.	2ND	Stat.	3RD	Stat.	Rel Req	Remarks/ Comments
Examination Category: F-A, SUPPORTS[1,4,5,6]															
F1.30B	Class 3 Piping Supports - Multi-Directional Restraints-[2,6]	Visual VT-3													
		VT-3	SSW	18-JF-29	ISI-I-29-1SH1	10	1	0		1		0			
				6-JF-29	ISI-I-29-1SH2	2	0	0		0		0			
				12-JF-29	ISI-I-29-1SH1	1	0	0		0		0			
				12-JF-29	ISI-I-29-1SH2	8	0	0		0		0			
				22-JF-29	ISI-I-29-1SH2	2	0	0		0		0			
				22-JH-29	ISI-I-29-1SH2	3	0	0		0		0			
				22-JH-29	ISI-I-29-1SH1	6	1	0		0		1			
				14-JF-29	ISI-I-29-1SH1	1	0	0		0		0			
				Total SSW		33	2	0		1		1			
		VT-3	RBCCW	14-HE-30	ISI-I-30-1SH1	2	1	0		0		1			
				14-HE-30	ISI-I-30-1SH2	1	0	0		0		0			
				12-HE-30	ISI-I-30-1SH2	9	0	0		0		0			
				12-HE-30	ISI-I-30-1SH1	9	2	1		1		0			
				12-HE-30	ISI-I-30-2SH2	5	0	0		0		0			
				12-HE-30	ISI-I-30-2SH1	5	0	0		0		0			
				8-HE-30	ISI-I-30-1SH2	5	0	0		0		0			
				8-HE-30	ISI-I-30-2SH1	2	0	0		0		0			
				8-HE-30	ISI-I-30-2SH2	3	1	1		0		0			
				8-HE-30	ISI-I-30-1SH1	4	1	1		0		0			
				8-HE-30	ISI-1-30-4SH1	1	0	0		0		0			
				8-HE-30	ISI-1-30-4SH2	1	0	0		0		0			
				8-HE-30	ISI-1-30-5	2	2	0		2		0			
				6-HE-30	ISI-I-30-2SH1	11	1	1		0		0			
				6-HE-30	ISI-I-30-1SH1	18	1	0		1		0			
				10-HE-30	ISI-I-30-2SH1	3	1	0		0		1			
				10-HE-30	ISI-I-30-2SH2	1	0	0		0		0			
				16-HE-30	ISI-I-30-2SH2	7	0	0		0		0			
				16-HE-30	ISI-I-30-2SH1	4	1	1		0		0			
				Total RBCCW		93	11	5		4		2			
				Total Class 3 (F1.30B)		126	13	5		5		3			
								38%		77%		100%			
F1.30C	Class 3 Piping Supports - Permitting Thermal Movement-[2,6]	Visual VT-3													
		VT-3	SSW	N/A	N/A	0	0	0		0		0			
				Total SSW		0	0	0		0		0			
		VT-3	RBCCW	12-HE-30	ISI-I-30-1SH2	2	1	0		1		0			
				12-HE-30	ISI-I-30-2SH2	3	0	0		0		0			
				6-HE-30	ISI-I-30-2SH1	2	1	0		0		1			
				Total RBCCW		7	2	0		1		1			
				Total Class 3 (F1.30C)		7	2	0		1		1			
			Total Class 3 (F1.30A+F1.30B+F1.30C)			174	21	5		11		5			
							12%	24%		76%		100%			10% of Class 3 required

Exam Item	Item Description	Exam Method	System	Line or Component ID	ISO No.	No. Items	No. Sch'd	INSPECTION PERIODS 1ST	Stat.	2ND	Stat.	3RD	Stat.	Rel Req	Remarks/ Comments
Examination Category: F-A, SUPPORTS[1,4,5,6]															
F1.30(S)	Class 3 Snubber Attachments-[7]	VT-3				1	1	0		0		1			
				Total Class 3 [F1.30(S)]		1	1 100%	0 0%		0 0%		1 100%			10% of Class 3 required

TABLE 3.1-5
ISI CLASS 1, 2, 3, AND MC COMPONENT SUPPORTS (IWF) SUMMARY TABLE

Exam Item	Item Description	Exam Method	System	Line or Component ID	ISO No.	No. Items	No. Sch'd	INSPECTION PERIODS 1ST	Stat.	2ND	Stat.	3RD	Stat.	Rel Req	Remarks/ Comments
Examination Category: F-A, SUPPORTS[1,4,5,6]															
F1.40	Supports Other than Piping Supports (Class 1, 2, 3, and MC)-[3,6]	Visual VT-3													
		VT-3	RHR	HEAT EXCHANGER	ISI-E207A	4	1	0		0		1			
			RHR	HEAT EXCHANGER	ISI-E207B	4	0	0		0		0			
			RHR	PUMP	ISI-P203A	1	1	0		0		1			
			RHR	PUMP	ISI-P203B	1	0	0		0		0			
			RHR	PUMP	ISI-P203C	1	0	0		0		0			
			RHR	PUMP	ISI-P203D	1	0	0		0		0			
			RHR	N/A	ISI-I-10-2B	2	0	0		0		0			
			RHR	N/A	ISI-I-10-2A	1	0	0		0		0			
			RCIC	N/A	ISI-I-13-2	1	1	0		0		1			
			CS	N/A	ISI-P215A	1	1	0		0		1			
			CS	N/A	ISI-P215B	1	0	0		0		0			
			CS	N/A	ISI-I-14-2B	1	0	0		0		0			
			RBCCW	N/A	ISI-E206A	1	1	0		0		1			
			RBCCW	N/A	ISI-E122A	1	1	0		0		1			
			RBCCW	N/A	ISI-I-29-1SH1	1	0	0		0		0			
			RBCCW	N/A	ISI-E209A	1	1	0		0		1			
			RBCCW	N/A	ISI-I-30-2SH1	3	0	0		0		0			
			RBCCW	N/A	ISI-P202A	1	1	0		0		1			
			RBCCW	N/A	ISI-I-30-2SH2	3	0	0		0		0			
			HPCI	N/A	ISI-I-23-4	1	1	0		0		1			
			RPV	N/A	ISI-I-54-1	4	4	4		0		0			
			RPV	N/A	N/A	1	1	0		0		1			
			CONT	N/A	C1A175SH1 &	4	4	2		2		0			
			CONT	N/A	ISI-IWE-AUG-1	8	2	1		1		0			
			SSW	N/A	ISI-I-29-1SH2	5	1	0		0		1			
				Total F1.40 Supports		53	21	7		3		11			
							40%	33%		48%		100%			100% of the supports required-[3]
		TOTALS:													
		Total Snubber Attachments				68	17	6		5		6			
							25%	35%		65%		100%			
		Total Piping Supports				706	136	29		62		45			
							19%	21%		67%		100%			
		Total Piping & Other Than Piping Supports				759	157	36		65		56			
							21%	23%		64%		100%			

Exam Item	Item Description	Exam Method	System	Line or Component ID	ISO No.	No. Items	No. Sch'd	INSPECTION PERIODS 1ST	Stat.	2ND	Stat.	3RD	Stat.	Rel Req	Remarks/ Comments

Examination Category: F-A, SUPPORTS

Notes for Examination Category F-A:

(1) Item numbers shall be categorized to identify support types by component support function (e.g., A = supports such as one-directional rod hangers; B = supports such as multidirectional restraints; and C = supports that allow thermal movement, such as springs).

(2) The total percentage sample shall be comprised of supports from each system (e.g., Main Steam, Feedwater, or RHR), where the individual sample sizes are proportional to the total number of nonexempt supports of each type and function within each system.

(3) For multiple components other than piping, within a system of similar design, function, and service, the supports of only one of the multiple components are required to be examined.

(4) To the extent practical, the same supports selected for examination during the first inspection interval shall be examined during each successive inspection interval.

(5) Relief Request PRR-7 applies to all Code Item Numbers and regards the Repair/Replacement Welding Program in accordance with ASME Section XI, Sub Article IWA-4150.

(6) The total number of components under Item Nos. F1.10A, F1.10B, F1.10C, F1.20A, F1.20B, F1.20C, F1.30A, F1.30B, and F1.30C do not include counts of snubber attachments.

(7) IWF Class 1, 2, and 3 snubber component attachments (e.g., clamps, attachments to buildings, bolting, fasteners, etc.) are included under this ISI Program Plan under new Item Nos. F1.10(S), F1.20(S), and F1.30(S). The complete snubber assemblies will be inspected "pin-to-pin" in accordance with site-specified requirements. See Section 1.5.2.2 of this ISI Program Plan for further details.

(8) Torus saddle supports: 25% of saddle supports examined during the inspection interval.
Torus earthquake ties: 100% of Torus earthquake tie supports examined during the inspection interval.
Drywell Stabilizers: 25% of supports examined during the inspection interval.

Exam Item	Item Description	Exam Method	System	Line or Component ID	ISO No.	No. Items	No. Sch'd	INSPECTION PERIODS 1ST	Stat.	2ND	Stat.	3RD	Stat.	Rel Req	Remarks/ Comments
Examination Category: R-A, RISK-INFORMED[1,2]															
R1.11	Elements Subject to Thermal Fatigue[3]	Volumetric												Y	PRR-10
			FW	12"-DL-6	ISI-I-6-1	27	5	1		0		4			
			FW	18"-DL-6	ISI-I-6-1	12	2	0		1		1			
			FW	18"-DL-6	ISI-I-6-1A	4	1	0		1		0			
			Total FW			43	8	1		2		5			
			HPCI	14"-DL-6	ISI-I-23-1	2	1	0		1		0			
			Total HPCI			2	1	0		1		0			
			MS	3"-EL-1	ISI-I-1-1 Sh. 2	6	2	1		0		1			
			Total MS			6	2	1		0		1			
			RHR	18"-DCA-10	ISI-I-10-1	15	4	0		0		4			
			Total RHR			15	4	0		0		4			
			RPV	12"-DL-6	ISI-I-6-1	4	4	4		0		0			
			Total RPV			4	4	4		0		0			
		Total R1.11				70	19	6		3		10			
R1.12	Elements Subject to High Cycle Mechanical Fatigue	Visual, VT-2												Y	PRR-10
			NONE	N/A	N/A	0	0	0		0		0			
		Total R1.12				0	0	0		0		0			
R1.13	Elements Subject to Erosion Cavitation	Volumetric												Y	PRR-10
			NONE	N/A	N/A	0	0	0		0		0			
		Total R1.13				0	0	0		0		0			
R1.14	Elements Subject to Crevice Corrosion Cracking[3]	Volumetric												Y	PRR-10; PRR-39
			RPV	DCA/IN	ISI-I-14-1	2	1	0		0		1			
			Total RPV			2	1	0		0		1			
		Total R1.14				2	1	0		0		1			
R1.15	Elements Subject to Primary Water Stress Corrosion Cracking (PWSCC)	Visual, VT-2												Y	PRR-10
			NONE	N/A	N/A	0	0	0		0		0			
		Total R1.15				0	0	0		0		0			

Exam Item	Item Description	Exam Method	System	Line or Component ID	ISO No.	No. Items	No. Sch'd	INSPECTION PERIODS 1ST	Stat.	2ND	Stat.	3RD	Stat.	Rel Req	Remarks/ Comments
Examination Category: R-A, RISK-INFORMED[1,2]															
R1.16	Elements Subject to Intergranular or Transgranular Stress Corrosion Cracking (IGSCC, TGSCC)[4]	Volumetric												Y	PRR-10
			NONE	N/A	N/A	0	0	0		0		0			
		Total R1.16				0	0	0		0		0			
R1.17	Elements Subject to Localized Corrosion (MIC or Pitting)	Visual, VT-3 on Internal Surfaces, or Volumetric												Y	PRR-10
			NONE	N/A	N/A	0	0	0		0		0			
		Total R1.17				0	0	0		0		0			
R1.18	Elements Subject to Flow Accelerated Corrosion (FAC)[5]	Per FAC Program												Y	PRR-10
			NONE	N/A	N/A	0	0	0		0		0			
		Total R1.18				0	0	0		0		0			
R1.19	Elements Subject to External Chloride Stress Corrosion Cracking (ECSCC)	Surface												Y	PRR-10
			NONE	N/A	N/A	0	0	0		0		0			
		Total R1.19				0	0	0		0		0			
R1.20	Elements Not Subject to a Damage Mechanism	Volumetric												Y	PRR-10; PRR-15; PRR-39
			CS	10"-DBA/DCA-14	ISI-I-14-1	4	2	0		0		2			
			CS	10"-DC-14	ISI-I-14-1	9	0	0		0		0			
			CS	10"-DCA/DC-14	ISI-I-14-1	1	0	0		0		0			
			CS	10"-DC/DCA-14	ISI-I-14-1	3	0	0		0		0			
			CS	10"-DCA-14	ISI-I-14-1	13	1	0		0		1			
			CS	10"-DBA-14	ISI-I-14-1	14	2	0		0		2			
			Total CS			44	5	0		0		5			
			FW	18"-DL-6	ISI-I-6-1	12	3	3		0		0			
			FW	12"-DL-6	ISI-I-6-1	16	1	1		0		0			
			FW	18"-DL-6	ISI-I-6-1A	5	0	0		0		0			
			Total FW			33	4	4		0		0			
			HPCI	14"-DL-6	ISI-I-23-1	2	0	0		0		0			
			HPCI	10"-EB-23	ISI-I-23-1	23	2	0		2		0			
			HPCI	14"-DB-23	ISI-I-23-1	14	2	0		2		0			
			Total HPCI			39	4	0		4		0			

Exam Item	Item Description	Exam Method	System	Line or Component ID	ISO No.	No. Items	No. Sch'd	INSPECTION PERIODS 1ST	Stat.	2ND	Stat.	3RD	Stat.	Rel Req	Remarks/ Comments
Examination Category: R-A, RISK-INFORMED[1,2]															
R1.20	Elements Not Subject to a Damage Mechanism (continued)	Volumetric												Y	PRR-10; PRR-15; PRR-39
			RCIC	3"-EB-13	ISI-I-13-1	19	2	0		2		0			
			RCIC	4"-DB-13	ISI-I-13-1	15	1	0		0		1			
			RCIC	4"-DL-6	ISI-I-13-1	2	0	0		0		0			
			Total RCIC			36	3	0		2		1			
			RECIRC	28"-DCA-2	ISI-I-2R-A	16	0	0		0		0			
			RECIRC	22"-DCA-2	ISI-I-2R-A	2	0	0		0		0			
			RECIRC	12"-DCA-2	ISI-I-2R-A	12	4	2		0		2			
			RECIRC	2"-DCA-2	ISI-I-2R-A	5	0	0		0		0			
			RECIRC	28"-DCA-2	ISI-I-2R-B	16	0	0		0		0			
			RECIRC	22"-DCA-2	ISI-I-2R-B	2	0	0		0		0			
			RECIRC	12"-DCA-2	ISI-I-2R-B	12	3	0		2		1			
			RECIRC	2"-DCA-2	ISI-I-2R-B	5	0	0		0		0			
			Total RECIRC			70	7	2		2		3			
			RHR	18"-DC-10	ISI-I-10-1	4	0	0		0		0			
			RHR	18"-DC/DCA-10	ISI-I-10-1	4	1	1		0		0			
			RHR	18"-DCA-10	ISI-I-10-1	9	0	0		0		0			
			RHR	20"-DCA-10	ISI-I-10-1A	12	0	0		0		0			
			RHR	20"-EL-10	ISI-I-10-1A	12	2	0		0		2			
			RHR	20"-DCA/EL-10	ISI-I-10-1A	1	0	0		0		0			
			RHR	20"-DCA-10	ISI-I-2R-A	1	0	0		0		0			
			Total RHR			43	3	1		0		2			
			RPV	20"-EB-1	ISI-I-1-1 Sh. 1	4	1	1		0		0			
			RPV	N/A	ISI-I-11-1	1	0	0		0		0			
			RPV	2"-DB-4	ISI-I-1-1 Sh. 2	1	0	0		0		0			
			RPV	12"-DCA-2	ISI-I-2R-A	5	2	2		0		0			
			RPV	28"-DCA-2	ISI-I-2R-A	1	0	0		0		0			
			RPV	12"-DCA-2	ISI-I-2R-B	5	0	0		0		0			
			RPV	28"-DCA-2	ISI-I-2R-B	1	0	0		0		0			
			RPV	IN/CS	ISI-I-3-1	1	0	0		0		0			
			RPV	N/A	ISI-I-54-4	9	1	0		0		1			
			RPV	N/A	N/A	2	0	0		0		0			
			Total RPV			30	4	3		0		1			

Exam Item	Item Description	Exam Method	System	Line or Component ID	ISO No.	No. Items	No. Sch'd	INSPECTION PERIODS 1ST	Stat.	2ND	Stat.	3RD	Stat.	Rel Req	Remarks/ Comments
Examination Category: R-A, RISK-INFORMED[1,2]															
R1.20	Elements Not Subject to a Damage Mechanism (continued)	Volumetric												Y	PRR-10; PRR-15; PRR-39
			RWCU	6"-DCA-12	ISI-I-12-1 Sh. 1	33	6	4		1		1			
			RWCU	2"-DCA-12	ISI-I-12-1 Sh. 1	1	0	0		0		0			
			RWCU	6"-EA-12	ISI-I-12-1 Sh. 1	2	1	0		1		0			
			RWCU	6"-DCA/EA-12	ISI-I-12-1 Sh. 1	1	0	0		0		0			
			RWCU	6"-EA/DCA-12	ISI-I-12-1 Sh. 1	1	0	0		0		0			
			RWCU	2"-EB/MD-4	ISI-I-12-1 Sh. 2	1	0	0		0		0			
			RWCU	2"-DB/EB-4	ISI-I-12-1 Sh. 2	1	0	0		0		0			
			RWCU	2"-DCA-12	ISI-I-12-1 Sh. 2	15	0	0		0		0			
			RWCU	2"-DB/DCA-12	ISI-I-12-1 Sh. 2	1	0	0		0		0			
			RWCU	2"-DB-4	ISI-I-12-1 Sh. 2	22	0	0		0		0			
			RWCU	6"-DL-6	ISI-I-12-2	15	2	2		0		0			
			RWCU	4"-DM/DA-12	ISI-I-12-2	1	0	0		0		0			
			RWCU	4"-DA-12	ISI-I-12-2	2	0	0		0		0			
			RWCU	4"-DA/DM-12	ISI-I-12-2	1	0	0		0		0			
			RWCU	4"-DM-12	ISI-I-12-2	18	0	0		0		0			
			RWCU	6"-DA/DL-6	ISI-I-12-2	1	0	0		0		0			
			Total RWCU			116	9	6		2		1			
			SBLC	1-1/2"-DC	ISI-I-11-1	69	3	0		0		3			
			SBLC	2"-DC	ISI-I-11-1	3	0	0		0		0			CR-PNP-2005-00319
			Total SBLC			72	3	0		0		3			
			MS	20"-EB-1	ISI-I-1-1 Sh. 1	50	4	4		0		0			
			MS	6"-EB-1	ISI-I-1-1 Sh. 1	12	0	0		0		0			
			MS	20"-EB-1	ISI-I-1-1 Sh. 2	20	4	1		1		2			
			MS	2-EB-1	ISI-I-1-1 Sh. 2	4	1	1		0		0			
			Total MS			86	9	6		1		2			
		Total R1.20				569	51	22		11		18			
		TOTAL R-A[6,7]				641	71	28		14		29			
								39%		59%		100%			

Exam Item	Item Description	Exam Method	System	Line or Component ID	ISO No.	No. Items	No. Sch'd	INSPECTION PERIODS 1ST	Stat.	2ND	Stat.	3RD	Stat.	Rel Req	Remarks/ Comments

Examination Category: R-A, RISK-INFORMED[1,2]

Notes for Exam. Category R-A:

(1) In 2001, the Pilgrim Nuclear Power Station implemented a risk-informed inservice inspection program for Class 1 piping welds (i.e., Examination Categories B-F and B-J). As part of this application, the Class 1 circumferential piping welds were assigned alternate Examination Category and Code Item Numbers that were consistent with ASME Section XI Code Case N-578-1. The alternate risk-informed Examination Category is R-A and the Code Item Numbers are R1.11 though R1.20, inclusive and are also shown in this Table. Note that the total number of Class 1 circumferential piping welds in the ISI Program remained unchanged. Only the designations have been changed to reflect the Examination Category and Code Item Numbers established in Code Case N-578-1.

(2) *Relief Request PRR-7 applies to all Code Item Number and regards the Repair/Replacement Welding Program in accordance with ASME Section XI, Sub Article IWA-4150.*

(3) Four of the sixty-seven elements listed under Item No. R1.11 are subject to crevice corrosion cracking in addition to thermal fatigue conditions. For documentation purposes, all four have only been included in the total count for Item No. R1.11. In accordance with EPRI Topical Report No. TR-112657, any examinations performed on these four elements will be subject to the criteria for both crevice corrosion cracking and thermal fatigue locations. These four elements are: 6-N4C-1, 6-N4D-1, 14-A-1, and 14-B-1.

(4) In accordance with EPRI Topical Report No. TR-112657, welds classified as Category "A" per NRC Generic Letter 88-01 are considered resistant to IGSCC. As such, IGSCC is not assigned as a degradation mechanism for these welds. Welds classified as Categories "B" through "G" per Generic Letter 88-01 are examined in accordance with the PNPS IGSCC Program. Coordination between the IGSCC Program and RI-ISI Program is described in the PNPS RI-ISI Template.

(5) Flow accelerated corrosion examinations are performed in accordance with the PNPS FAC Program. Coordination between the FAC Program and the RI-ISI Program is described in the PNPS RI-ISI Template.

(6) Includes all non-exempt Examination Category B-F and B-J locations. *All in-scope piping components, regardless of risk classification, will continue to receive Code required pressure* testing, as part of the current ASME Section XI Program. VT-2 visual examinations are scheduled in accordance with the Station's pressure test program that remains unaffected by the RI-ISI Program.

(7) Total RI-ISI Program Selections: 71.

Exam Item	Item Description	Exam Method	System	Line or Component ID	ISO No.	No. Items	No. Sch'd	1ST	Stat.	2ND	Stat.	3RD	Stat.	Rel Req	Remarks / Comments
								INSPECTION PERIODS							
Augmented Inspections: ISI CLASS I PRESSURE BOUNDARY ONLY (PBO)[1]															
PBO	PRESSURE RETAINING COMPONENTS: PIPING[2]														
		VT-2	RBCCW	8"-HE-30	ISI-I-30-4 Sh. 1	1	1	0		0		1			
		VT-2	RBCCW	6"-HE-30	ISI-I-30-4 Sh. 1	1	1	0		0		1			
		VT-2	RBCCW	8"-HE-30	ISI-I-30-4 Sh. 2	1	1	0		0		1			
		VT-2	RBCCW	6"-HE-30	ISI-I-30-4 Sh. 2	1	1	0		0		1			
		VT-2	RBCCW	6"-HE-30	ISI-I-30-5	1	1	0		0		1			
		VT-2	RBCCW	8"-HE-30	ISI-I-30-5	1	1	0		0		1			
		VT-2	RBCCW	6"-HE-30	ISI-I-30-6	1	1	0		0		1			
			Total Piping :			7	7	0		0		7			
							100%	0%		0%		100%			
PBO	PRESSURE RETAINING COMPONENTS: HEAT EXCHANGERS & COOLERS[2,4,5]														
	Drywell Coolers	VT-2	RBCCW	VAC-205A, B, C, D, E, F	---	6	6	0		0		6			
	Drywell Coolers	VT-2	RBCCW	VAC-206A and B	---	2	2	0		0		2			
	Recirc Pump Seal Water Coolers	VT-2	RBCCW	E-213A, B	---	2	2	0		0		2			
	Recirc Pump Lube Oil Coolers	VT-2	RBCCW	E-214A, B	---	2	2	0		0		2			
	CRD Pump Thrust Bearing Coolers	VT-2	RBCCW	P-209A,B	---	2	2	0		0		2			
	CRD Pump Lube Oil Coolers	VT-2	RBCCW	E-212A, B	---	2	2	0		0		2			
	CRD Pump Area Coolers	VT-2	RBCCW	VAC-203A and B	---	2	2	0		0		2			
	Clean-up Recirc. Pump Cooling System	VT-2	RBCCW	E-215A and B	---	2	2	0		0		2			
	Clean-up Demin. Non-Regen. HXs	VT-2	RBCCW	E-216A and B	---	2	2	0		0		2			
	Fuel Pool HX	VT-2	RBCCW	E-206B	ISI-E206B	1	1	0		0		1			
	MG Set Area Coolers	VT-2	RBCCW	VAC-207A, B, C, D	---	4	4	0		0		4			
	MG Set Fluid Coupling & Bearing Oil Coolers	VT-2	RBCCW	E-211A, B	---	2	2	0		0		2			
			Total HXs and Coolers :			29	29	0		0		29			
							100%	0%		0%		100%			
	TOTAL PRESSURE RETAINING COMPONENTS :					36	36	0		0		36			
							100%	0%		0%		100%			

Exam Item	Item Description	Exam Method	System	Line or Component ID	ISO No.	No. Items	No. Sch'd	1ST	Stat.	2ND	Stat.	3RD	Stat.	Rel Req	Remarks / Comments
								INSPECTION PERIODS							
Augmented Inspections: ISI CLASS I PRESSURE BOUNDARY ONLY (PBO)[1]															
PBO	PIPING SUPPORT INTEGRAL ATTACHMENTS[3]														
		VT-3	RBCCW	8"-HE-30	ISH-30-4 Sh. 1	4	0	0		0		0			
		VT-3	RBCCW	6"-HE-30	ISH-30-4 Sh. 1	12	3	0		0		3			
		VT-3	RBCCW	8"-HE-30	ISH-30-4 Sh. 2	5	0	0		0		0			
		VT-3	RBCCW	6"-HE-30	ISH-30-4 Sh. 2	7	3	0		0		3			
		VT-3	RBCCW	N/A	ISH-30-4 Sh. 2	2	2	0		0		2			
		VT-3	RBCCW	8"-HE-30	ISH-30-5	3	0	0		0		0			
		VT-3	RBCCW	6"-HE-30	ISH-30-5	4	1	0		0		1			
		VT-3	RBCCW	N/A	ISH-30-5	2	1	0		0		1			
		VT-3	RBCCW	6"-HE-30	ISH-30-6	1	0	0		0		0			
			Total Piping Support Integral Attachments :			40	10	0		0		10			
							25%	0%		0%		100%			
PBO	PIPING SUPPORTS[3]														
		VT-3	RBCCW	8"-HE-30	ISH-30-4 Sh. 1	8	2	0		0		2			
		VT-3	RBCCW	6"-HE-30	ISH-30-4 Sh. 1	33	4	0		0		4			
		VT-3	RBCCW	8"-HE-30	ISH-30-4 Sh. 2	8	0	0		0		0			
		VT-3	RBCCW	6"-HE-30	ISH-30-4 Sh. 2	29	4	0		0		4			
		VT-3	RBCCW	N/A	ISH-30-4 Sh. 2	2	2	0		0		2			
		VT-3	RBCCW	8"-HE-30	ISH-30-5	8	1	0		0		1			
		VT-3	RBCCW	6"-HE-30	ISH-30-5	5	1	0		0		1			
		VT-3	RBCCW	N/A	ISH-30-5	2	1	0		0		1			
		VT-3	RBCCW	6"-HE-30	ISH-30-6	17	0	0		0		0			
			Total Piping Supports :			112	15	0		0		15			
							13%	0%		0%		100%			
	TOTAL PIPING SUPPORTS & INTEGRAL ATTACHMENTS[3]					152	25	0		0		25			
							16%	0%		0%		100%			

TABLE 3.1-7
ISI CLASS I PRESSURE BOUNDARY ONLY (PBO) COMPONENTS SUMMARY TABLE

Exam Item	Item Description	Exam Method	System	Line or Component ID	ISO No.	No. Items	No. Sch'd	INSPECTION PERIODS 1ST	Stat.	2ND	Stat.	3RD	Stat.	Rel Req	Remarks / Comments
Augmented Inspections: ISI CLASS I PRESSURE BOUNDARY ONLY (PBO)[1]															
PBO	HEAT EXCHANGER & COOLER SUPPORT INTEGRAL ATTACHMENTS[5,6]														
	Fuel Pool HX E-206B	VT-3	RBCCW	19-E206B-HL	ISI-E206B	1	1	0		0		1			
	Clean-up Demin. Non-Regen. HXs E-216A and B	VT-3	RBCCW	—	—	2	1	0		0		1			
	MG Set Fluid Coupling & Bearing Oil Coolers E-211A, B	VT-3	RBCCW	—	—	2	1	0		0		1			
			Total HX & Cooler Support Integral Attachments :			5	3	0		0		3			
							60%	0%		0%		100%			
PBO	HEAT EXCHANGER & COOLER SUPPORTS[5,6]														
	Fuel Pool HX E-206B	VT-3	RBCCW	H-19-1-E206B	ISI-E206B	1	1	0		0		1			
	Clean-up Demin. Non-Regen. HXs E-216A and B	VT-3	RBCCW	—	—	2	1	0		0		1			
	MG Set Fluid Coupling & Bearing Oil Coolers E-211A, B	VT-3	RBCCW	—	—	2	1	0		0		1			
			Total HX and Cooler Supports :			5	3	0		0		3			
							60%	0%		0%		100%			
	TOTAL HX & COOLER SUPPORTS & INTEGRAL ATTACHMENTS[6] :					10	6	0		0		6			
							60%	0%		0%		100%			

Notes to PBO Augmented Inspection Program:

(1) See Section 1.5.1.3 of this ISI Program Plan for further information.

(2) System leakage test per IWD-5221 once during the interval. The examination shall determine the integrity of the pressure boundary of the piping and components.

(3) VT-3 of approximately 10% of all pipe supports, restraints, and spring hangers, including integral attachments, for piping of greater than 4" NPS each inspection interval. For multiple components of similar design, function, and service only one of the multiple components need be examined.

(4) The PNPS Class I PBO heat exchangers and coolers are categorized as Non-Essential Heat Loads per the system design basis document (SDBD No. 30A) and the only safety function is to maintain pressure boundary integrity. No thermal performance or other surveillance testing is required under this augmented program.

(5) For the purposes of this augmented program, heat exchangers and coolers are listed as components of the RBCCW System.

(6) VT-3 of all heat exchanger / cooler pipe supports and integral attachments each inspection interval. For multiple components of similar design, function, and service only one of the multiple components need be examined.

SECTION 4.0

INSERVICE INSPECTION COMPONENTS & SCHEDULE

4.0 INSERVICE INSPECTION COMPONENTS & SCHEDULE

4.1 Tables of ASME Section XI Code Components And Schedules

4.1.1 ASME Section XI Subsection IWB, IWC, IWD, IWE, and IWF Inservice Inspection Tables

4.1.1.1 All components and component supports potentially subject to inservice NDE inspections under the 1998 Edition of ASME Section XI, 2000 Addenda, are contained within the Tables of this Section.

4.1.1.2 The Tables in this Section identify those components (and component supports) selected for examination during the Fourth Inspection Interval and provide a schedule by period, for examinations to be performed. The components and supports selected are those anticipated to be examined during the Fourth Inspection Interval; however, other components and supports may be substituted based on access and ALARA considerations. The total numbers of components and supports for each Examination Category and Item Number are provided in the Tables contained in Section 3.0.

4.1.1.3 The Tables in this Section are sorted alphabetically by plant system abbreviation. Each plant system is further sorted by ISI drawing number and line number. The table numbers and system acronyms (abbreviations) are as follows:

TABLE NUMBER	PNPS SYSTEM	SYSTEM ACRONYM	SYSTEM NUMBER
4.1-1	Containment Atmosphere Control System	CACS	50
4.1-2	Containment (Primary)	CONT	50
4.1-3	Control Rod Drive Hydraulic	CRD	3
4.1-4	Core Spray	CS	14
4.1-5	(Not Used)	-----	--
4.1-6	Feedwater	FW	6
4.1-7	High Pressure Coolant Injection	HPCI	23
4.1-8	Instrument Air	IA	31
4.1-9	Main Steam	MS	1
4.1-10	Post-Accident Sampling and Primary Containment Monitoring	PASS	65
4.1-11	Reactor Building Closed Cooling Water	RBCCW	30
4.1-12	Reactor Core Isolation Cooling	RCIC	13
4.1-13	Reactor Recirculation System	RECIRC	2
4.1-14	Residual Heat Removal	RHR	10
4.1-15	Reactor Pressure Vessel	RPV	54
4.1-16	Reactor Water Cleanup	RWCU	12
4.1-17	Standby Liquid Control	SBLC	11
4.1-18	Salt Service Water	SSW	29

4.1.1.4 The Tables provide the following information:

- **Component Identification** – the component identification number refers to the number as designated on the ISI drawings.

- **ASME Code Category** – provides the Examination Category identified in ASME Section XI, Tables IWB-2500-1, IWC-2500-1, IWD-2500-1, IWE-2500-1, and IWF-2500-1. Only those examination categories applicable to Pilgrim Nuclear Station are identified.

- **ASME Code Item Number** – provides the item number as defined in ASME Section XI, Tables IWB-2500-1, IWC-2500-1, IWD-2500-1, IWE-2500-1and IWF-2500-1. Only those item numbers applicable to Pilgrim Nuclear Station are identified.

- **Component Description** – a short text description of the specific component is provided, e.g., rigid hanger, snubber, pipe to elbow weld, etc.

- **ASME Code Exam** - provides the examination method(s): volumetric, surface, or visual, required by ASME Section XI, 1998 Code, 2000 Addenda, Tables IWB-2500-1, IWC-2500-1, IWD-2500-1, IWE-2500-1, and IWF-2500-1, or the approved alternative(s) via Relief Request(s) or Code Case(s).

- **Relief Request** – "Y" designates a Section XI Relief Request applies to the component, and "-" or no entry designates that no Relief Request is applicable to the component.

- **Inspection Period** – There are three Inspection Periods for the Fourth Interval as described in Section 1.1.1 of this ISI Plan. The First and Third Periods contain two (2) Refueling Outages each. The Second Period contains one (1) Refueling Outage.

<u>Period 1 (July 1, 2005 to June 30, 2009)</u>
Refueling Outage RFO-16 (Spring 2007)
Refueling Outage RFO-17 (Spring 2009)

<u>Period 2 (July 1, 2009 to June 30, 2012)</u>
Refueling Outage RFO-18 (Spring 2011)

<u>Period 3 (July 1, 2012 to June 30, 2015)</u>
Refueling Outage RFO-19 (Spring 2013)
Refueling Outage RFO-20 (Spring 2015)

It should be noted that the plant's current (original) operating license (DPR-35) will expire on June 8, 2012. This date falls within the 4th Interval.

Pilgrim's 4th Interval Inspection Periods are based on a twenty-four (24) month fuel cycle. The component schedule identifiers show when an item was examined or is scheduled to be examined.

X – Scheduled for the particular Period (1 = 1st Period; 2 = 2nd Period; 3 = 3rd Period)	P – Partial (less than 90% weld volume coverage achieved)
C – Completed	E – Expanded Scope
A – Augmented	B – Baseline
R – Re-examined	RR – Re-examination Required, i.e., IWB-2420(b)

- **Weld Length or Thickness** – provides weld length or thickness, where appropriate.

- **Remarks** – any applicable remarks provide additional information, such as the specific Relief Request number, previous inspection history (e.g., I2P1 = item was inspected in the 1st Period of the 2nd Interval), or denote specific instructions applicable to the component.

4.1.1.5 Some Tables provide the following information, in lieu of some information above, if applicable to the particular system:

- **IGSCC Category** – provides the intergranular stress corrosion cracking (IGSCC) Category, i.e., "A", "B", "C", "D", "E", "F", or "G", as defined in NRC G.L. 88-01, if applicable to the component.

- **IGSCC Program Exam. Credit** – a "Y" indicates that the IGSCC augmented program examination can be credited towards both the IGSCC and RI-ISI Programs. See Section 1.5.1.6 for further information.

- **FAC Program Exam. Credit** – a "Y" indicates that the FAC augmented program examination can be credited towards both the FAC and RI-ISI Programs. See Section 1.5.1.1 for further information.

4.1.1.6 Component entries in **bold** identify components that were not included in the 3rd ISI Interval component tracking database and which have been added to the 4th ISI Interval.

4.1.1.7 Component entries that have been <u>underlined</u> identify risk-informed (RI-ISI) components that have been selected for examination during the 4th ISI Interval.

COMPONENT IDENTIFICATION	ASME CODE CAT	ASME CODE ITEM	DESCRIPTION	ASME CODE EXAM	REL REQ	4TH ISI INTERVAL PER1	PER2	PER3	WELD LTH OR THICK	REMARKS
CACS										
Drawing Number: ISI-I-50-1										
Line Number: N/A										
SLT CACS-1	C-H	C7.10	PRESSURE BOUNDARY	VT-2	-	1	2	3	-	-
SLT CACS-2	C-H	C7.10	PRESSURE BOUNDARY	VT-2	-	1	2	3	-	-
SLT CACS-3	C-H	C7.10	PRESSURE BOUNDARY	VT-2	-	1	2	3	-	-
SLT CACS-4	C-H	C7.10	PRESSURE BOUNDARY	VT-2	-	1	2	3	-	-
Line Number: 20-HM-45										
H-45-1-1	F-A	F1.20-B	RIGID HANGER	-	-	-	-	-	-	I2P1, I3P2, HM-45-1PS1
HM-45-1PS1	**C-C**	**C3.20**	**WELDED ATTACHMENT**	-	-	-	-	-	-	**H-45-1-1**
H-45-1-4SG	F-A	F1.20-B	RIGID HANGER	-	-	-	-	-	-	I2P1, HM-45-4SGPS1
H-45-1-5	F-A	F1.20-C	SPRING HANGER	-	-	-	-	-	-	I2P2, HM-45-5PS1
HM-45-5PS1	**C-C**	**C3.20**	**WELDED ATTACHMENT**	-	-	-	-	-	-	**H-45-1-5**
H-45-1-5S	F-A	F1.20-B	GUIDE	-	-	-	-	-	-	I2P1, HM-45-5SPS1
HM-45-5SPS1	**C-C**	**C3.20**	**WELDED ATTACHMENT**	-	-	-	-	-	-	**H-45-1-5S**
H-45-1-6	F-A	F1.20-C	SPRING HANGER	-	-	-	-	-	-	I2P2, HM-45-6PS1
HM-45-6PS1	**C-C**	**C3.20**	**WELDED ATTACHMENT**	-	-	-	-	-	-	**H-45-1-6**

COMPONENT IDENTIFICATION	ASME CODE CAT	ASME CODE ITEM	DESCRIPTION	ASME CODE EXAM	REL REQ	4TH ISI INTERVAL PER1	PER2	PER3	WELD LTH OR THICK	REMARKS
CACS										
Drawing Number: ISI-I-50-1										
Line Number: 20-HM-45										
HM-45-4SGPS1	**C-C**	**C3.20**	**WELDED ATTACHMENT**	-	-	-	-	-	-	**H-45-1-4SG**
H-45-1-3SG	F-A	F1.20-B	RESTRAINT	-	-	-	-	-	-	I2P2
H-45-1-2SR	F-A	F1.20-B	RIGID HANGER	-	-	-	-	-	-	I2P1
H-45-1-1SG	F-A	F1.20-B	RIGID HANGER	-	-	-	-	-	-	I2P1, HM-45-1SGPS1
HM-45-1SGPS1	**C-C**	**C3.20**	**WELDED ATTACHMENT**	-	-	-	-	-	-	**H-45-1-1SG**
H-45-1-4	F-A	F1.20-C	SPRING HANGER	-	-	-	-	-	-	I2P2, I3P2, HM-45-4PS1
HM-45-4PS1	**C-C**	**C3.20**	**WELDED ATTACHMENT**	-	-	-	-	-	-	**H-45-1-4**
Line Number: 1-DC-45										
SLT CACS-X26-3	C-H	C7.10	DRYWELL PRESSURE INSTRUMENTATION PIPING	VT-2	-	1	2	3	-	-
SLT CACS-X228B	C-H	C7.10	TORUS PRESSURE INSTRUMENT PIPING	VT-2	-	1	2	3	-	-
Line Number: 1-HCB-45										
SLT CACS-X25-3	C-H	C7.10	DRYWELL POST ACCIDENT PURGE AND VENT	VT-2	-	1	2	3	-	-
SLT CACS-X227-3	C-H	C7.10	1" TORUS POST ACCIDENT PURGE AND VENT	VT-2	-	1	2	3	-	-

COMPONENT IDENTIFICATION	ASME CODE CAT	ASME CODE ITEM	DESCRIPTION	ASME CODE EXAM	REL REQ	4TH ISI INTERVAL PER1	PER2	PER3	WELD LTH OR THICK	REMARKS
CACS										
Drawing Number: ISI-I-50-1										
Line Number: 1-HM-9, 1-HE-9, 1-HCB-9										
SLT CACS-X26-2	C-H	C7.10	DRYWELL POST ACCIDENT PURGE AND VENT PIPING	VT-2	-	1	2	3	-	-
SLT CACS-X205-2	C-H	C7.10	TORUS POST ACCIDENT PURGE AND VENT PIPING	VT-2	-	1	2	3	-	-
Line Number: 2-HE-45										
SLT CACS-X25-2	C-H	C7.10	DRYWELL NORMAL EXHAUST	VT-2	-	1	2	3	-	-
SLT CACS-X227-2	C-H	C7.10	2" TORUS NORMAL EXHAUST (BYPASS)	VT-2	-	1	2	3	-	-
Line Number: 20-HM-45										
SLT CACS-X227-4	C-H	C7.10	TORUS VACUUM BREAKERS X-212A/B	VT-2	-	1	2	3	-	-
Line Number: 3/4-HCB-45										
SLT CACS-X46D	C-H	C7.10	DRYWELL LEVEL SENSING LEG	VT-2	-	1	2	3	-	-
SLT CACS-X25-4	C-H	C7.10	DRYWELL LEVEL REFERENCE LEG	VT-2	-	1	2	3	-	-
Line Number: 8-HBB-45										
SLT CACS-X227-1	C-H	C7.10	8" TORUS PURGE EXHAUST TO DIRECT TORUS VENT	VT-2	-	1	2	3	-	-
Line Number: 8-HE-45										
SLT CACS-X25-1	C-H	C7.10	DRYWELL PURGE EXHAUST	VT-2	-	1	2	3	-	-

COMPONENT IDENTIFICATION	ASME CODE CAT	ASME CODE ITEM	DESCRIPTION	ASME CODE EXAM	REL REQ	4TH ISI INTERVAL PER1	PER2	PER3	WELD LTH OR THICK	REMARKS
CACS										
Drawing Number: ISI-I-50-1										
Line Number: 8-HE-9, 4-HE-9										
SLT CACS-X26-1	C-H	C7.10	DRYWELL PURGE INLET	VT-2	-	1	2	3	-	-
Line Number: 8-HM-45, 4-HE-9										
SLT CACS-X205-1	C-H	C7.10	TORUS PURGE INLET	VT-2	-	1	2	3	-	-

COMPONENT IDENTIFICATION	ASME CODE CAT	ASME CODE ITEM	DESCRIPTION	ASME CODE EXAM	REL REQ	4TH ISI INTERVAL PER1	PER2	PER3	WELD LTH OR THICK	REMARKS
CONT										
Drawing Number: C1A175SH1 & C1A-62-4										
Line Number: N/A										
H-50-1-TORUSBAY1	F-A	F1.40	TORUS SUPPORTS	-	-	-	2	-	-	I3P2
H-50-1-TORUSBAY9	F-A	F1.40	TORUS SUPPORTS	-	-	1	-	-	-	I3P1
H-50-1-TORUSBAY5	F-A	F1.40	TORUS SUPPORTS	-	-	-	2	-	-	I3P2
H-50-1-TORUSBAY13	F-A	F1.40	TORUS SUPPORTS	-	-	1	-	-	-	I3P1

COMPONENT IDENTIFICATION	ASME CODE CAT	ASME CODE ITEM	DESCRIPTION	ASME CODE EXAM	REL REQ	4TH ISI INTERVAL PER1	PER2	PER3	WELD LTH OR THICK	REMARKS
CONT										
Drawing Number: ISI-IWE-AUG-1										
Line Number: N/A										
IWE-SNDCUSH-035	E-C	E4.12	AUGMENTED DRYWELL UT AT 9 FT 035 AZ.			1	-	-		I3P1
IWE-SNDCUSH-125	E-C	E4.12	AUGMENTED DRYWELL UT AT 9 FT 125 AZ.			1	-	-		I3P1
IWE-SNDCUSH-215	E-C	E4.12	AUGMENTED DRYWELL UT AT 9 FT 215 AZ.			1	-	-		I3P1
IWE-SNDCUSH-305	E-C	E4.12	AUGMENTED DRYWELL UT AT 9 FT 305 AZ.			1	-	-		I3P1
IWE-TORUS-LOWER-B1	E-C	E4.12	AUGMENTED TORUS UT elev.-11ft 6in BAY 1			1	-	-		I3P1, I3P2, I3P3
IWE-TORUS-LOWER-B5	E-C	E4.12	AUGMENTED TORUS UT elev.-11ft 6in BAY 5			1	-	-		I3P1, I3P2, I3P3
IWE-TORUS-MWL-B1	E-C	E4.12	AUGMENTED TORUS UT AT MWL BAY 1			1	-	-		I3P1, I3P2, I3P3
IWE-TORUS-MWL-B13	E-C	E4.12	AUGMENTED TORUS UT AT MWL BAY 13			1	-	-		I3P1, I3P2, I3P3
IWE-TORUS-MWL-B5	E-C	E4.12	AUGMENTED TORUS UT AT MWL BAY 5			1	-	-		I3P1, I3P2, I3P3
IWE-TORUS-MWL-B9	E-C	E4.12	AUGMENTED TORUS UT AT MWL BAY 9			1	-	-		I3P1, I3P2, I3P3
IWE-VENT-337	E-C	E4.11	AUGMENTED VENT PIPE AT 337 AZ			1	-	-		I3P1, I3P2, I3P3
IWE-UPDW-72-288	E-C	E4.12	AUGMENTED DRYWELL UT AT 72 FT 288 AZ.			1	-	-		I3P1
IWE-TORUS-LOWER-B13	E-C	E4.12	AUGMENTED TORUS UT elev.-11ft 6in BAY 13			1	-	-		I3P1, I3P2, I3P3
IWE-UPDW-83-072	E-C	E4.12	AUGMENTED DRYWELL UT AT 83 FT 72 AZ.			1	-	-		I3P1
IWE-UPDW-83-108	E-C	E4.12	AUGMENTED DRYWELL UT AT 83 FT 108 AZ.			1	-	-		I3P1
IWE-UPDW-83-252	E-C	E4.12	AUGMENTED DRYWELL UT AT 83 FT 252 AZ.			1	-	-		I3P1
IWE-UPDW-83-288	E-C	E4.12	AUGMENTED DRYWELL UT AT 83 FT 288 AZ.			1	-	-		I3P1
IWE H-50-1-90GIBS	F-A	F1.40	DRYWELL STABILIZER			-	-	-		-

COMPONENT IDENTIFICATION	ASME CODE CAT	ASME CODE ITEM	DESCRIPTION	ASME CODE EXAM	REL REQ	4TH ISI INTERVAL PER1	PER2	PER3	WELD LTH OR THICK	REMARKS
CONT Drawing Number: ISI-IWE-AUG-1 Line Number: N/A										
IWE-GVWD-01	E-A	E1.11	GENERAL VISUAL WALKDOWN			1	2	3	-	I3P1, I3P2, I3P3
IWE-UPDW-72-252	E-C	E4.12	AUGMENTED DRYWELL.		-	1	-	-	-	I3P1; UT at 72 ft 252 az
IWE-VS-01	E-A	E1.20	VENT SYSTEM		-	-	-	3	-	I3P3
H-50-1-360GIBS	F-A	F1.40	DRYWELL STABILIZER		-	-	-	-	-	-
H-50-1-45GIBS	F-A	F1.40	DRYWELL STABILIZER		-	-	-	-	-	-
H-50-1-315GIBS	F-A	F1.40	DRYWELL STABILIZER		-	-	2	-	-	I3P2
IWE-TORUS-LOWER-B9	E-C	E4.12	AUGMENTED TORUS		-	1	-	-	-	I3P1, I3P2, I3P3; UT elev.-11ft 6in BAY 9
IWE-VENT-292	E-C	E4.11	AUGMENTED VENT PIPE AT 292 AZ			1	-	-	-	I3P1, I3P2, I3P3
H-50-1-225GIBS	F-A	F1.40	DRYWELL STABILIZER		-	-	-	-	-	-
H-50-1-180GIBS	F-A	F1.40	DRYWELL STABILIZER		-	-	-	-	-	-
IWE-DV-01	E-A	E1.12	DETAILED VISUAL		-	-	-	3	-	I3P2
H-50-1-270GIBS	F-A	F1.40	DRYWELL STABILIZER		-	1	-	-	-	I3P1
IWE-ANNDRN-080	E-C	E4.11	ANNULUS DRAINS(2) AT 80 AZ.			1	-	-	-	I3P1, I3P2, I3P3
IWE-ANNDRN-170	E-C	E4.11	ANNULUS DRAINS(2) AT 170 AZ.			1	-	-	-	I3P1, I3P2, I3P3
IWE-VENT-112	E-C	E4.11	AUGMENTED VENT PIPE AT 112 AZ			1	-	-	-	I3P1, I3P2, I3P3
IWE-VENT-247	E-C	E4.11	AUGMENTED VENT PIPE AT 247 AZ			1	-	-	-	I3P1, I3P2, I3P3
IWE-VENT-202	E-C	E4.11	AUGMENTED VENT PIPE AT 202 AZ			1	-	-	-	I3P1, I3P2, I3P3
H-50-1-135GIBS	F-A	F1.40	DRYWELL STABILIZER		-	-	-	-	-	-
IWE-VENT-157	E-C	E4.11	AUGMENTED VENT PIPE AT 157 AZ			1	-	-	-	I3P1, I3P2, I3P3

COMPONENT IDENTIFICATION	ASME CODE CAT	ASME CODE ITEM	DESCRIPTION	ASME CODE EXAM	REL REQ	4TH ISI INTERVAL PER1	PER2	PER3	WELD LTH OR THICK	REMARKS
CONT										
Drawing Number: ISI-IWE-AUG-1										
Line Number: N/A										
IWE-VENT-022	E-C	E4.11	AUGMENTED VENT PIPE AT 22 AZ			1	-	-	-	3P1, I3P2, I3P3
IWE-VENT-067	E-C	E4.11	AUGMENTED VENT PIPE AT 67 AZ			1	-	-	-	3P1, I3P2, I3P3
IWE-ANNDRN-260	E-C	E4.11	ANNULUS DRAINS (2) AT 260 AZ			1	-	-	-	3P1, I3P2, I3P3
IWE-ANNDRN-350	E-C	E4.11	ANNULUS DRAINS (2) AT 350 AZ			1	-	-	-	3P1, I3P2, I3P3

COMPONENT IDENTIFICATION	ASME CODE CAT	ASME CODE ITEM	DESCRIPTION	ASME CODE EXAM	REL REQ	4TH ISI INTERVAL PER1	PER2	PER3	WELD LTH OR THICK	REMARKS
CONT										
Drawing Number: ISI-IWE-AUG-2										
Line Number: N/A										
IWE-LINERDRAINS	E-C	E4.11	LINER DRAINS	-	-	1	-	-	-	3P1, I3P2, I3P3

COMPONENT IDENTIFICATION	ASME CODE CAT	ASME CODE ITEM	DESCRIPTION	ASME CODE EXAM	REL REQ	4TH ISI INTERVAL PER1	PER2	PER3	WELD LTH OR THICK	REMARKS
CONT Drawing Number: N/A Line Number: N/A										
IWE-CB-GIBS45	E-A	E1.11	CONTAINMENT BOLTING	-	Y	-	-	3	-	I3P3
IWE-CB-X200A	E-A	E1.11	CONTAINMENT BOLTING	-	Y	-	-	3	-	I3P2
IWE-CB-X200B	E-A	E1.11	CONTAINMENT BOLTING	-	Y	-	-	3	-	I3P1
IWE-CB-X203A	E-A	E1.11	CONTAINMENT BOLTING	-	Y	-	-	3	-	I3P1
IWE-CB-X203B	E-A	E1.11	CONTAINMENT BOLTING	-	Y	-	-	3	-	I3P1
IWE-CB-X203C	E-A	E1.11	CONTAINMENT BOLTING	-	Y	-	-	3	-	I3P1
IWE-CB-X203J	E-A	E1.11	CONTAINMENT BOLTING	-	Y	-	-	3	-	I3P3
IWE-CB-X213A	E-A	E1.11	CONTAINMENT BOLTING	-	Y	-	-	3	-	I3P1
IWE-CB-X1	E-A	E1.11	CONTAINMENT BOLTING	-	Y	-	-	3	-	I3P2
IWE-CB-X2	E-A	E1.11	CONTAINMENT BOLTING	-	Y	-	-	3	-	I3P3
IWE-CB-GIBS90	E-A	E1.11	CONTAINMENT BOLTING	-	Y	-	-	3	-	I3P3
IWE-CB-GIBS360	E-A	E1.11	CONTAINMENT BOLTING	-	Y	-	-	3	-	I3P3
IWE-CB-GIBS315	E-A	E1.11	CONTAINMENT BOLTING	-	Y	-	-	3	-	I3P2
IWE-CB-GIBS270	E-A	E1.11	CONTAINMENT BOLTING	-	Y	-	-	3	-	I3P1
IWE-CB-GIBS225	E-A	E1.11	CONTAINMENT BOLTING	-	Y	-	-	3	-	I3P2
IWE-CB-GIBS180	E-A	E1.11	CONTAINMENT BOLTING	-	Y	-	-	3	-	I3P2
IWE-CB-GIBS135	E-A	E1.11	CONTAINMENT BOLTING	-	Y	-	-	3	-	I3P2
IWE-CB-DWHEAD	E-A	E1.11	CONTAINMENT BOLTING	-	Y	-	-	3	-	(DRYWELL HEAD); I3P1

COMPONENT IDENTIFICATION	ASME CODE CAT	ASME CODE ITEM	DESCRIPTION	ASME CODE EXAM	REL REQ	4TH ISI INTERVAL PER1	PER2	PER3	WELD LTH OR THICK	REMARKS
CONT Drawing Number: N/A Line Number: N/A										
IWE-CB-X43	E-A	E1.11	CONTAINMENT BOLTING	-	Y	-	-	3	-	I3P3
IWE-CB-X203E	E-A	E1.11	CONTAINMENT BOLTING	-	Y	-	-	3	-	I3P2
IWE-CB-X203F	E-A	E1.11	CONTAINMENT BOLTING	-	Y	-	-	3	-	I3P2
IWE-CB-X203G	E-A	E1.11	CONTAINMENT BOLTING	-	Y	-	-	3	-	I3P3
IWE-CB-X203H	E-A	E1.11	CONTAINMENT BOLTING	-	Y	-	-	3	-	I3P3
IWE-CB-X203K	E-A	E1.11	CONTAINMENT BOLTING	-	Y	-	-	3	-	I3P3
IWE-CB-X213B	E-A	E1.11	CONTAINMENT BOLTING	-	Y	-	-	3	-	I3P2
IWE-CB-X230	E-A	E1.11	CONTAINMENT BOLTING	-	Y	-	-	3	-	I3P3
IWE-CB-X35A	E-A	E1.11	CONTAINMENT BOLTING	-	Y	-	-	3	-	I3P1
IWE-CB-X35B	E-A	E1.11	CONTAINMENT BOLTING	-	Y	-	-	3	-	I3P2
IWE-CB-X35C	E-A	E1.11	CONTAINMENT BOLTING	-	Y	-	-	3	-	I3P2
IWE-CB-X35D	E-A	E1.11	CONTAINMENT BOLTING	-	Y	-	-	3	-	I3P3
IWE-CB-X4	E-A	E1.11	CONTAINMENT BOLTING	-	Y	-	-	3	-	I3P1
IWE-CB-X47	E-A	E1.11	CONTAINMENT BOLTING	-	Y	-	-	3	-	I3P3
IWE-CB-X6	E-A	E1.11	CONTAINMENT BOLTING	-	Y	-	-	3	-	I3P1
IWE-CB-X203D	E-A	E1.11	CONTAINMENT BOLTING	-	Y	-	-	3	-	I3P2
IWE-CB-X35E	E-A	E1.11	CONTAINMENT BOLTING	-	Y	-	-	3	-	I3P3

COMPONENT IDENTIFICATION	ASME CODE CAT	ASME CODE ITEM	DESCRIPTION	ASME CODE EXAM	REL REQ	4TH ISI INTERVAL PER1	PER2	PER3	WELD LTH OR THICK	REMARKS
CRD Drawing Number: ISI-I-3-1 Line Number: N/A										
SLT CRD-1	C-H	C7.10	EAST HCU'S	VT-2	-	1	2	3	-	-
SLT CRD-2	C-H	C7.10	WEST HCU'S	VT-2	-	1	2	3	-	-
SLT CRD-3	C-H	C7.10	EAST SCRAM HEADER	VT-2	-	1	2	3	-	-
SLT CRD-4	C-H	C7.10	WEST SCRAM HEADER	VT-2	-	1	2	3	-	-

COMPONENT IDENTIFICATION	ASME CODE CAT	ASME CODE ITEM	DESCRIPTION	ASME CODE EXAM	REL REQ	4TH ISI INTERVAL PER1	PER2	PER3	WELD LTH OR THICK	REMARKS
CRD										
Drawing Number: ISI-I-3-1										
Line Number: 12-EB-3										
3-ESD-25	C-F-2	C5.51	PIPE TO CAP	-	Y	-	-	-	-	PRR-8
3-WSD-22	C-F-2	C5.51	ELBOW TO PIPE	-	Y	-	-	-	-	PRR-8
H-3-1-42	F-A	F1.20-B	RESTRAINT	-	-	-	-	-	-	I2P1
3-WSD-23	C-F-2	C5.51	PIPE TO CAP	-	Y	-	-	-	-	PRR-8
3-ESD-24	C-F-2	C5.51	ELBOW TO PIPE	-	Y	1	-	-	-	PRR-8, I3P1
H-3-1-22	F-A	F1.20-B	RESTRAINT	-	-	-	-	3	-	I2P1, I3P3
Line Number: 6-EB-3										
3-WSD-13	C-F-2	C5.51	PIPE TO ELBOW	-	Y	-	-	-	-	PRR-8
3-WSD-14	C-F-2	C5.51	ELBOW TO PIPE	-	Y	-	-	-	-	PRR-8
3-WSD-15	C-F-2	C5.51	PIPE TO ELBOW	-	Y	-	-	-	-	PRR-8
3-WSD-21	C-F-2	C5.51	PIPE TO REDUCING ELBOW	-	Y	-	-	-	-	PRR-8
3-WSD-20	C-F-2	C5.51	PIPE TO PIPE	-	Y	-	-	-	-	PRR-8, I2P1
3-WSD-19	C-F-2	C5.51	TEE TO PIPE	-	Y	-	-	-	-	PRR-8
3-WSD-12	C-F-2	C5.51	PIPE TO PIPE	-	Y	-	-	-	-	PRR-8
3-WSD-18	C-F-2	C5.51	PIPE TO TEE	-	Y	-	-	-	-	PRR-8
3-ESD-9	C-F-2	C5.51	PIPE TO PIPE	-	Y	-	-	-	-	PRR-8
3-WSD-17	C-F-2	C5.51	PIPE TO PIPE	-	Y	-	-	-	-	PRR-8, I2P3
3-WSD-16	C-F-2	C5.51	ELBOW TO PIPE	-	Y	-	-	-	-	PRR-8, I2P3

COMPONENT IDENTIFICATION	ASME CODE CAT	ASME CODE ITEM	DESCRIPTION	ASME CODE EXAM	REL REQ	4TH ISI INTERVAL PER1	PER2	PER3	WELD LTH OR THICK	REMARKS
CRD Drawing Number: ISI-I-3-1 Line Number: 6-EB-3										
3-WSD-2	C-F-2	C5.51	ELBOW TO PIPE	-	Y	-	-	-	-	PRR-8
3-ESD-21	C-F-2	C5.51	PIPE TO ELBOW	-	Y	-	-	-	-	PRR-8, I2P1
3-ESD-10	C-F-2	C5.51	CAP TO PIPE	-	Y	-	-	-	-	PRR-8
3-ESD-11	C-F-2	C5.51	CAP TO PIPE	-	Y	-	-	-	-	PRR-8
3-ESD-12	C-F-2	C5.51	PIPE TO PIPE	-	Y	-	-	-	-	PRR-8
3-ESD-13	C-F-2	C5.51	PIPE TO ELBOW	-	Y	-	-	-	-	PRR-8
3-ESD-14	C-F-2	C5.51	ELBOW TO PIPE	-	Y	-	-	-	-	PRR-8
3-ESD-15	C-F-2	C5.51	PIPE TO ELBOW	-	Y	-	-	-	-	PRR-8
3-ESD-16	C-F-2	C5.51	ELBOW TO PIPE	-	Y	1	-	-	-	PRR-8, I2P1, I3P1
3-ESD-17	C-F-2	C5.51	PIPE TO PIPE	-	Y	-	-	-	-	PRR-8, I2P1
3-ESD-18	C-F-2	C5.51	PIPE TO TEE	-	Y	-	-	-	-	PRR-8
3-ESD-19	C-F-2	C5.51	TEE TO PIPE	-	Y	-	-	-	-	PRR-8
3-WSD-10	C-F-2	C5.51	CAP TO PIPE	-	Y	-	-	-	-	PRR-8
3-ESD-20	C-F-2	C5.51	PIPE TO PIPE	-	Y	-	-	-	-	PRR-8
3-WSD-11	C-F-2	C5.51	CAP TO PIPE	-	Y	-	2	-	-	PRR-8, I2P2, I3P2
3-ESD-22	C-F-2	C5.51	ELBOW TO PIPE	-	Y	-	-	-	-	PRR-8, I2P1
3-ESD-23	C-F-2	C5.51	PIPE TO REDUCER ELBOW	-	Y	-	-	-	-	PRR-8
3-ESD-3	C-F-2	C5.51	PIPE TO ELBOW	-	Y	-	-	-	-	PRR-8, I2P1
3-ESD-4	C-F-2	C5.51	PIPE TO PIPE	-	Y	-	-	-	-	PRR-8, I2P1

COMPONENT IDENTIFICATION	ASME CODE CAT	ASME CODE ITEM	DESCRIPTION	ASME CODE EXAM	REL REQ	4TH ISI INTERVAL PER1	PER2	PER3	WELD LTH OR THICK	REMARKS
CRD **Drawing Number: ISI-I-3-1** **Line Number: 6-EB-3**										
3-ESD-5	C-F-2	C5.51	ELBOW TO PIPE	-	Y	-	-	-	-	PRR-8
3-ESD-6	C-F-2	C5.51	PIPE TO ELBOW	-	Y	-	-	-	-	PRR-8
3-ESD-7	C-F-2	C5.51	ELBOW TO PIPE	-	Y	-	-	-	-	PRR-8
3-ESD-8	C-F-2	C5.51	PIPE TO ELBOW	-	Y	-	-	-	-	PRR-8
3-WSD-9	C-F-2	C5.51	PIPE TO PIPE	-	Y	-	-	-	-	PRR-8
3-WSD-1	C-F-2	C5.51	PIPE TO TEE	-	Y	-	-	-	-	PRR-8
3-ESD-2	C-F-2	C5.51	ELBOW TO PIPE	-	Y	-	-	-	-	PRR-8
H-3-1-41	F-A	F1.20-B	STRUT	-	-	-	-	-	-	I2P1
H-3-1-20	F-A	F1.20-B	RESTRAINT	-	-	-	-	-	-	I2P1
H-3-1-26	F-A	F1.20-B	RESTRAINT	-	-	-	-	-	-	I2P1
H-3-1-27	F-A	F1.20-B	ANCHOR	-	-	-	-	-	-	I2P1, EB-3-1PS
EB-3-1PS	**C-C**	**C3.20**	**WELDED ATTACHMENT**	-	-	-	-	-	-	**H-3-1-27**
H-3-1-28	F-A	F1.20-B	RESTRAINT	-	-	-	-	-	-	I2P1
H-3-1-29	F-A	F1.20-B	STRUT	-	-	-	-	-	-	I2P1
H-3-1-30	F-A	F1.20-B	RESTRAINT	-	-	-	-	3	-	I2P1, I3P3
H-3-1-31	F-A	F1.20-B	RESTRAINT	-	-	-	-	-	-	I2P1
3-WSD-7	C-F-2	C5.51	ELBOW TO PIPE	-	Y	-	-	-	-	PRR-8
H-3-1-33	F-A	F1.20-B	STRUT	-	-	-	-	-	-	I2P1
H-3-1-38	F-A	F1.20-A	RIGID SUPPORT	-	-	-	-	-	-	I2P1, I3P3

COMPONENT IDENTIFICATION	ASME CODE CAT	ASME CODE ITEM	DESCRIPTION	ASME CODE EXAM	REL REQ	4TH ISI INTERVAL PER1	PER2	PER3	WELD LTH OR THICK	REMARKS
CRD Drawing Number: ISI-I-3-1 Line Number: 6-EB-3										
H-3-1-46	F-A	F1.20-B	ANCHOR	-	-	-	-	-	-	I2P1, EB-3-2PS
EB-3-2PS	**C-C**	**C3.20**	**WELDED ATTACHMENT**	-	-	-	-	-	-	**H-3-1-46**
H-3-1-47	F-A	F1.20-B	RESTRAINT	-	-	-	-	-	-	I2P1
H-3-1-48	F-A	F1.20-B	RESTRAINT	-	-	-	2	-	-	I2P1, I3P2
H-3-1-49	F-A	F1.20-B	RESTRAINT	-	-	-	2	-	-	I2P1, I3P2
H-3-1-50	F-A	F1.20-B	RESTRAINT	-	-	-	-	-	-	I2P1
H-3-1-51	F-A	F1.20-B	ANCHOR	-	-	-	-	-	-	I2P1, EB-3-3PS
EB-3-3PS	**C-C**	**C3.20**	**WELDED ATTACHMENT**	-	-	-	-	-	-	**H-3-1-51**
H-3-1-52	F-A	F1.20-B	RESTRAINT	-	-	-	-	-	-	I2P1
H-3-1-32	F-A	F1.20-B	ANCHOR	-	-	-	-	-	-	I2P1, EB-3-4PS
EB-3-4PS	**C-C**	**C3.20**	**WELDED ATTACHMENT**	-	-	-	-	-	-	**H-3-1-32**
H-3-1-15	F-A	F1.20-A	RIGID SUPPORT	-	-	-	-	-	-	I2P1
3-WSD-4	C-F-2	C5.51	PIPE TO PIPE	-	Y	-	-	-	-	PRR-8, I2P3
3-WSD-5	C-F-2	C5.51	ELBOW TO PIPE	-	Y	-	-	3	-	PRR-8, I2P3, I3P3
3-WSD-6	C-F-2	C5.51	PIPE TO ELBOW	-	Y	-	-	-	-	PRR-8
3-ESD-1	C-F-2	C5.51	PIPE TO TEE	-	Y	-	-	-	-	PRR-8
3-WSD-8	C-F-2	C5.51	PIPE TO ELBOW	-	Y	-	-	-	-	PRR-8
H-3-1-21	F-A	F1.20-C	SPRING HANGER	-	-	-	2	-	-	I2P1, I3P2
H-3-1-12	F-A	F1.20-A	RIGID HANGER	-	-	-	-	-	-	I2P1

COMPONENT IDENTIFICATION	ASME CODE CAT	ASME CODE ITEM	DESCRIPTION	ASME CODE EXAM	REL REQ	4TH ISI INTERVAL PER1	PER2	PER3	WELD LTH OR THICK	REMARKS
CRD Drawing Number: ISI-I-3-1 Line Number: 6-EB-3										
H-3-1-40	F-A	F1.20-A	RIGID SUPPORT	-	-	-	-	-	-	I2P1
H-3-1-14	F-A	F1.20-A	RIGID SUPPORT	-	-	-	-	-	-	I2P1
H-3-1-39	F-A	F1.20-A	RIGID SUPPORT	-	-	-	-	-	-	I2P1
H-3-1-16	F-A	F1.20-A	RIGID SUPPORT	-	-	-	-	-	-	I2P1
H-3-1-17	F-A	F1.20-A	RIGID SUPPORT	-	-	-	-	3	-	I2P1, I3P3
H-3-1-18	F-A	F1.20-A	RIGID HANGER	-	-	-	-	-	-	I2P1
H-3-1-19	F-A	F1.20-A	RIGID SUPPORT	-	-	-	-	-	-	I2P1
H-3-1-34	F-A	F1.20-A	RIGID SUPPORT	-	-	-	-	-	-	I2P1
H-3-1-35	F-A	F1.20-A	RIGID HANGER	-	-	-	-	-	-	I2P1
H-3-1-36	F-A	F1.20-A	RIGID SUPPORT	-	-	-	-	-	-	I2P1
3-WSD-3	C-F-2	C5.51	PIPE TO ELBOW	-	Y	-	-	-	-	PRR-8
H-3-1-13	F-A	F1.20-A	RIGID HANGER	-	-	-	-	-	-	I2P1

COMPONENT IDENTIFICATION	ASME CODE CAT	ASME CODE ITEM	DESCRIPTION	IGSCC CAT.	REL. REQ	4TH ISI INTERVAL PER1	PER2	PER3	IGSCC PROGRAM EXAM CREDIT	REMARKS
CORE SPRAY										
Drawing Number: ISI-I-10-5BSH1										
Line Number: 6-GB-14										
HL-10-F151	C-F-2	C5.51	VALVE TO PIPE	-	Y	-	-	-	-	PRR-8

COMPONENT IDENTIFICATION	ASME CODE CAT	ASME CODE ITEM	DESCRIPTION	IGSCC CAT.	REL. REQ	4TH ISI INTERVAL PER1	PER2	PER3	IGSCC PROGRAM EXAM CREDIT	REMARKS
CORE SPRAY **Drawing Number: ISI-I-14-1** **Line Number: 10-DBA-14**										
14-B-4	N/A	N/A	PIPE TO PIPE	-	-	-	-	-	-	-
14-B-5	R-A	R1.20	ELBOW TO PIPE	-	Y	-	-	-	-	(B-J, B9.11), PRR-10, I2P3
14-B-6	R-A	R1.20	PIPE TO ELBOW	-	Y	-	-	-	-	(B-J, B9.11), PRR-10, I2P2
14-B-7	R-A	R1.20	ELBOW TO PIPE	-	Y	-	-	-	-	(B-J, B9.11), PRR-10, I2P3
14-B-8	R-A	R1.20	ELBOW TO ELBOW	-	Y	-	-	-	-	(B-J, B9.11), PRR-10
14-B-9	R-A	R1.20	PIPE TO ELBOW	-	Y	-	-	-	-	(B-J, B9.11), PRR-10
14-B-9A	R-A	R1.20	ELBOW TO PIPE	-	Y	-	-	-	-	(B-J, B9.11), PRR-10
14-B-10	R-A	R1.20	PIPE TO ELBOW	-	Y	-	-	-	-	(B-J, B9.11), PRR-10, I2P3
14-A-4	N/A	N/A	PIPE TO PIPE	-	-	-	-	-	-	-
14-A-5	R-A	R1.20	ELBOW TO PIPE	-	Y	-	-	-	-	(B-J, B9.11), PRR-10, I2P3
14-A-7	R-A	R1.20	ELBOW TO PIPE	-	Y	-	-	-	-	(B-J, B9.11), PRR-10, I2P3
14-A-8	R-A	R1.20	PIPE TO ELBOW	-	Y	-	-	-	-	(B-J, B9.11), PRR-10, I2P2
14-A-9	R-A	R1.20	PIPE TO ELBOW	-	Y	-	-	-	-	(B-J, B9.11), PRR-10
14-A-9A	R-A	R1.20	ELBOW TO PIPE	-	-	-	-	3	-	RI-ISI; (B-J, B9.11); I2P3, RFO#15
14-A-10	R-A	R1.20	PIPE TO ELBOW	-	-	-	-	3	-	RI-ISI; (B-J, B9.11); I2P3, I3P3, RFO#15
H-14-1-41	F-A	F1.10-C	SPRING HANGER	-	-	-	-	-	-	I2P1, I3P2
H-14-1-43	F-A	F1.10-C	SPRING HANGER	-	-	-	-	-	-	I2P1

COMPONENT IDENTIFICATION	ASME CODE CAT	ASME CODE ITEM	DESCRIPTION	IGSCC CAT.	REL. REQ	4TH ISI INTERVAL PER1	PER2	PER3	IGSCC PROGRAM EXAM CREDIT	REMARKS
CORE SPRAY										
Drawing Number: ISI-I-14-1										
Line Number: 10-DBA/DCA-14										
14-A-10A	R-A	R1.20	VALVE TO PIPE	D	Y	-	-	3	Y	RI-ISI; IGSCC; (B-F, B5.130); PRR-39; I2P1; I3P3
14-A-3	R-A	R1.20	PIPE TO REDUCER	D	Y	-	-	3	Y	RI-ISI; IGSCC; (B-F, B5.130); PRR-39; I2P1; I3P3
14-B-10A	R-A	R1.20	VALVE TO PIPE	D	Y	-	-	-	-	IGSCC; (B-F, B5.130); PRR-10; PRR-39; I2P1; I3P
14-B-3	R-A	R1.20	PIPE TO REDUCER	D	Y	-	-	-	-	IGSCC; (B-F, B5.130); PRR-10; PRR-39; I2P1; I3P
Line Number: 10-DC-14										
14-B-17	R-A	R1.20	PIPE TO PENETRATION	D	Y	-	-	-	-	IGSCC; (B-J, B9.11), PRR-10, I2P1, I3P1
14-B-18	R-A	R1.20	ELBOW TO PIPE	D	Y	-	-	-	-	IGSCC; (B-J, B9.11), PRR-10
14-B-19	R-A	R1.20	PIPE TO ELBOW	D	Y	-	-	-	-	IGSCC; (B-J, B9.11), PRR-10, I2P1, I3P1
14-B-20	R-A	R1.20	PIPE TO PIPE	D	Y	-	-	-	-	IGSCC; (B-J, B9.11), PRR-10, I2P1, I3P1
14-B-16A	R-A	R1.20	PENETRATION TO FLUED HEAD	G	-	-	-	-	-	IGSCC; INACCESSIBLE, PRR-10
14-A-16A	R-A	R1.20	PENETRATION TO FLUED HEAD	G	Y	-	-	-	-	IGSCC; INACCESSIBLE; PRR-10
14-A-17	R-A	R1.20	PIPE TO PENETRATION	D	Y	-	-	-	-	IGSCC; (B-J, B9.11), PRR-10, I2P3
14-A-18	R-A	R1.20	PIPE TO PIPE	D	Y	-	-	-	-	IGSCC; (B-J, B9.11), PRR-10
14-A-19	R-A	R1.20	VALVE TO PIPE	D	Y	-	-	-	-	IGSCC; (B-J, B9.11), PRR-10
14-VB-1400-9A	B-G-2	B7.70	VALVE BOLTING	-	Y	-	-	3	-	PPR-14, I2P3, I3P3
14-VI-1400-25A	B-M-2	B12.50	VALVE INTERNALS	-	-	-	-	-	-	-
H-14-1-X16A	F-A	F1.10-B	ANCHOR	-	-	-	-	-	-	I2P1
H-14-1-X16B	F-A	F1.10-B	ANCHOR	-	-	-	-	-	-	I2P3

COMPONENT IDENTIFICATION	ASME CODE CAT	ASME CODE ITEM	DESCRIPTION	IGSCC CAT.	REL. REQ	4TH ISI INTERVAL PER1	PER2	PER3	IGSCC PROGRAM EXAM CREDIT	REMARKS
CORE SPRAY										
Drawing Number: ISI-I-14-1										
Line Number: 10-DC-14										
DC-14-F1	C-F-1	C5.11	PIPE TO VALVE	-	Y	-	-	3	-	PRR-8, I3P3
DC-14-F31	C-F-1	C5.11	PIPE TO VALVE	-	Y	-	2	-	-	PRR-8, I3P2
14-VB-1400-25A	B-G-2	B7.70	VALVE BOLTING	-	Y	-	2	-	-	PPR-14, I2P1, I3P2
14-VB-1400-25B	B-G-2	B7.70	VALVE BOLTING	-	Y	-	2	-	-	PPR-14, I2P1, I3P2
Line Number: 10-DC/DCA-14										
14R-B-16	R-A	R1.20	PENETRATION TO ELBOW	D	Y	-	-	-	-	IGSCC; (B-J, B9.11), PRR-10, I2P2, I3P1
14R-B-21A	R-A	R1.20	PIPE TO PIPE	D	Y	-	-	-	-	IGSCC; (B-J, B9.11), PRR-10
14R-A-16	R-A	R1.20	PENETRATION TO ELBOW	D	Y	-	-	-	-	IGSCC; (B-J, B9.11), PRR-10, I2P2, I3P1
Line Number: 10-DCA-14										
14R-B-11	R-A	R1.20	PIPE TO VALVE	A	Y	-	-	-	-	IGSCC; (B-J, B9.11), PRR-10
14R-B-12	R-A	R1.20	ELBOW TO PIPE	A	Y	-	-	-	-	IGSCC; (B-J, B9.11), PRR-10
14R-A-11	R-A	R1.20	PIPE TO VALVE	A	Y	-	-	3	-	RI-ISI; IGSCC; (B-J, B9.11), PRR-10, I3P3
14R-A-11A	R-A	R1.20	PIPE TO PIPE	A	Y	-	-	-	-	IGSCC; (B-J, B9.11), PRR-10
14R-A-12	R-A	R1.20	ELBOW TO PIPE	A	Y	-	-	-	-	IGSCC; (B-J, B9.11), PRR-10
14R-A-13	R-A	R1.20	VALVE TO ELBOW	A	Y	-	-	-	-	IGSCC; (B-J, B9.11), PRR-10
14R-A-14	R-A	R1.20	PIPE TO VALVE	A	Y	-	-	-	-	IGSCC; (B-J, B9.11), PRR-10
14R-A-15	R-A	R1.20	ELBOW TO PIPE	A	Y	-	-	-	-	IGSCC; (B-J, B9.11), PRR-10

COMPONENT IDENTIFICATION	ASME CODE CAT	ASME CODE ITEM	DESCRIPTION	IGSCC CAT.	REL. REQ	4TH ISI INTERVAL PER1	PER2	PER3	IGSCC PROGRAM EXAM CREDIT	REMARKS
CORE SPRAY **Drawing Number: ISI-I-14-1** **Line Number: 10-DCA-14**										
14-B-2	R-A	R1.20	REDUCER TO SAFE END	A	Y	-	-	-	-	IGSCC; (B-J, B9.11), PRR-10
14-VB-1400-6A	B-G-2	B7.70	VALVE BOLTING	-	Y	-	-	3	-	PPR-14, I2P3, I3P3
14-VB-1400-9B	B-G-2	B7.70	VALVE BOLTING	-	Y	-	-	3	-	PPR-14, I2P3, I3P3
14-VB-1400-6B	B-G-2	B7.70	VALVE BOLTING	-	Y	-	-	3	-	PPR-14, I2P3, I3P3
14-A-2	R-A	R1.20	REDUCER TO SAFE END	A	Y	-	-	-	-	IGSCC; (B-J, B9.11); PRR-10
14-VI-1400-6A	B-M-2	B12.50	VALVE INTERNALS	-	-	-	-	-	-	-
14R-B-15ALU	N/A	N/A	LONG SEAM	-	Y	-	-	-	-	(B-J, B9.12) PRR-10
14R-B-15BLU	N/A	N/A	LONG SEAM	-	Y	-	-	-	-	(B-J, B9.12) PRR-10
14R-B-15LD	N/A	N/A	LONG SEAM	-	Y	-	-	-	-	(B-J, B9.12) PRR-10
14R-B-16ALD	N/A	N/A	LONG SEAM	-	Y	-	-	-	-	(B-J, B9.12) PRR-10
14R-B-16BLD	N/A	N/A	LONG SEAM	-	Y	-	-	-	-	(B-J, B9.12) PRR-10
14R-A-11APS	B-K	B10.20	PIPE STANCHION	-	-	-	-	-	-	EXEMPT
14R-A-12PS	B-K	B10.20	PIPE STANCHION	-	-	-	-	-	-	EXEMPT
14R-B-12PS1	B-K	B10.20	PIPE STANCHION	-	-	-	-	-	-	EXEMPT
14R-B-13BLD	N/A	N/A	LONG SEAM	-	Y	-	-	-	-	(B-J, B9.12) PRR-10
14-VI-1400-25B	B-M-2	B12.50	VALVE INTERNALS	-	-	-	-	-	-	-
14R-B-13ALD	N/A	N/A	LONG SEAM	-	Y	-	-	-	-	(B-J, B9.12) PRR-10

COMPONENT IDENTIFICATION	ASME CODE CAT	ASME CODE ITEM	DESCRIPTION	IGSCC CAT.	REL. REQ	4TH ISI INTERVAL PER1	PER2	PER3	IGSCC PROGRAM EXAM CREDIT	REMARKS
CORE SPRAY										
Drawing Number: ISI-I-14-1										
Line Number: 10-DCA-14										
14-VI-1400-6B	B-M-2	B12.50	VALVE INTERNALS	-	-	-	-	-	-	-
14-VI-1400-9A	B-M-2	B12.50	VALVE INTERNALS	-	-	-	-	-	-	-
14-VI-1400-9B	B-M-2	B12.50	VALVE INTERNALS	-	-	-	-	-	-	-
H-14-1-15S	N/A	N/A	SNUBBER	-	-	-	2	-	-	I2P1, I3P2
H-14-1-16S	N/A	N/A	SNUBBER	-	-	-	-	-	-	I2P1
H-14-1-17S	N/A	N/A	SNUBBER	-	-	-	-	-	-	I2P1
H-14-1-18S	N/A	N/A	SNUBBER	-	-	-	-	-	-	I2P1
H-14-1-40	F-A	F1.10-C	SPRING HANGER	-	-	-	2	-	-	I2P1, I3P2
H-14-1-42	F-A	F1.10-C	SPRING HANGER	-	-	-	-	-	-	I2P1
14R-B-12PS2	B-K	B10.20	PIPE STANCHION	-	-	-	-	-	-	EXEMPT
14R-A-15ALU	N/A	N/A	LONG SEAM	-	Y	-	-	-	-	(B-J, B9.12) PRR-10
14R-B-14	R-A	R1.20	PIPE TO VALVE	A	Y	-	-	-	-	IGSCC; (B-J, B9.11), PRR-10
14R-B-15	R-A	R1.20	ELBOW TO PIPE	A	Y	-	-	-	-	IGSCC; (B-J, B9.11), PRR-10
14R-A-11A-LD	N/A	N/A	LONG SEAM	-	Y	-	-	-	-	(B-J, B9.12) PRR-10
14R-A-11A-LU	N/A	N/A	LONG SEAM	-	Y	-	-	-	-	(B-J, B9.12) PRR-10
14R-A-11LU	N/A	N/A	LONG SEAM	-	Y	-	-	-	-	(B-J, B9.12) PRR-10
14R-A-12ALU	N/A	N/A	LONG SEAM	-	Y	-	-	-	-	(B-J, B9.12) PRR-10
14R-A-12BLU	N/A	N/A	LONG SEAM	-	Y	-	-	-	-	(B-J, B9.12) PRR-10
14R-A-12LD	N/A	N/A	LONG SEAM	-	Y	-	-	-	-	(B-J, B9.12) PRR-10

COMPONENT IDENTIFICATION	ASME CODE CAT	ASME CODE ITEM	DESCRIPTION	IGSCC CAT.	REL. REQ	4TH ISI INTERVAL PER1	PER2	PER3	IGSCC PROGRAM EXAM CREDIT	REMARKS
CORE SPRAY										
Drawing Number: ISI-I-14-1										
Line Number: 10-DCA-14										
14R-A-13ALD	N/A	N/A	LONG SEAM	-	Y	-	-	-	-	(B-J, B9.12) PRR-10
14R-B-14LU	N/A	N/A	LONG SEAM	-	Y	-	-	-	-	(B-J, B9.12) PRR-10
14R-A-14LU	N/A	N/A	LONG SEAM	-	Y	-	-	-	-	(B-J, B9.12) PRR-10
14R-B-13	R-A	R1.20	VALVE TO ELBOW	A	Y	-	-	-	-	IGSCC; (B-J, B9.11), PRR-10
14R-A-15BLU	N/A	N/A	LONG SEAM	-	Y	-	-	-	-	(B-J, B9.12) PRR-10
14R-A-15LD	N/A	N/A	LONG SEAM	-	Y	-	-	-	-	(B-J, B9.12) PRR-10
14R-A-16ALD	N/A	N/A	LONG SEAM	-	Y	-	-	-	-	(B-J, B9.12) PRR-10
14R-A-16BLD	N/A	N/A	LONG SEAM	-	Y	-	-	-	-	(B-J, B9.12) PRR-10
14R-B-11LU	N/A	N/A	LONG SEAM	-	Y	-	-	-	-	(B-J, B9.12) PRR-10
14R-B-12ALU	N/A	N/A	LONG SEAM	-	Y	-	-	-	-	(B-J, B9.12) PRR-10
14R-B-12BLU	N/A	N/A	LONG SEAM	-	Y	-	-	-	-	(B-J, B9.12) PRR-10
14R-B-12LD	N/A	N/A	LONG SEAM	-	Y	-	-	-	-	(B-J, B9.12) PRR-10
14R-A-13BLD	N/A	N/A	LONG SEAM	-	Y	-	-	-	-	(B-J, B9.12) PRR-10
Line Number: 10-DCA/DC-14										
14R-B-21	R-A	R1.20	VALVE TO PIPE	A	Y	-	-	-	-	IGSCC; (B-J, B9.11), PRR-10

COMPONENT IDENTIFICATION	ASME CODE CAT	ASME CODE ITEM	DESCRIPTION	IGSCC CAT.	REL. REQ	4TH ISI INTERVAL PER1	PER2	PER3	IGSCC PROGRAM EXAM CREDIT	REMARKS
CORE SPRAY **Drawing Number: ISI-I-14-2A** **Line Number: N/A**										
SLT CORE SPRAY-1	C-H	C7.10	PRESSURE BOUNDARY	-	-	1	2	3	-	VT-2
SLT CORE SPRAY-2	C-H	C7.10	PRESSURE BOUNDARY	-	-	1	2	3	-	VT-2
SLT CORE SPRAY-3	C-H	C7.10	PRESSURE BOUNDARY	-	-	1	2	3	-	VT-2
SLT CORE SPRAY-4	C-H	C7.10	PRESSURE BOUNDARY	-	-	1	2	3	-	VT-2
SLT CORE SPRAY-5	C-H	C7.10	PRESSURE BOUNDARY	-	-	1	2	3	-	VT-2

COMPONENT IDENTIFICATION	ASME CODE CAT	ASME CODE ITEM	DESCRIPTION	IGSCC CAT.	REL. REQ	4TH ISI INTERVAL PER1	PER2	PER3	IGSCC PROGRAM EXAM CREDIT	REMARKS
CORE SPRAY										
Drawing Number: ISI-I-14-2A										
Line Number: 10-DB-14										
DB-14-VBW24A-1	C-G	C6.20	VALVE BODY WELD	-	-	-	-	3	-	I2P3, I3P3
DB-14-VBW24A-2	C-G	C6.20	VALVE BODY WELD	-	-	-	-	3	-	I2P3, I3P3
DB-14-F30	C-F-2	C5.51	VALVE TO PIPE	-	Y	-	-	-	-	PRR-8
Line Number: 10-DB/DC-14										
DB/DC-14-3002-5-1	C-F-1	C5.11	ELBOW TO PIPE	-	Y	-	2	-	-	PRR-8, I2P2, I3P2
Line Number: 10-GB-14										
GB-14-3002-2-1	C-F-2	C5.51	ELBOW TO PIPE	-	Y	-	-	-	-	PRR-8
GB-14-3002-1X-2	C-F-2	C5.51	PIPE TO ELBOW	-	Y	-	-	-	-	PRR-8
GB-14-2-2C	C-F-2	C5.51	PIPE TO PIPE	-	Y	-	-	-	-	PRR-8
GB-14-2-2D	C-F-2	C5.51	BEND TO PIPE	-	Y	-	-	-	-	PRR-8, I2P2
GB-14-3002-1-1	C-F-2	C5.51	PIPE TO FLANGE	-	Y	-	-	-	-	PRR-8
GB-14-3002-1X-1	C-F-2	C5.51	FLANGE TO PIPE	-	Y	-	-	-	-	PRR-8
GB-14-3002-2-2	C-F-2	C5.51	PIPE TO ELBOW	-	Y	-	-	-	-	PRR-8
GB-14-3002-3-1	C-F-2	C5.51	PIPE TO PIPE	-	Y	-	-	-	-	PRR-8
GB-14-2-2E	C-F-2	C5.51	PIPE TO ELBOW	-	Y	-	-	-	-	PRR-8
GB-14-4-3F	C-F-2	C5.51	PIPE TO ELBOW	-	Y	1	-	-	-	PRR-8, I2P1, I3P1
GB-14-F32	C-F-2	C5.51	ELBOW TO PIPE	-	Y	-	-	-	-	PRR-8
GB-14-F46	C-F-2	C5.51	VALVE TO PIPE	-	Y	-	2	-	-	PRR-8, I2P2, I3P2

COMPONENT IDENTIFICATION	ASME CODE CAT	ASME CODE ITEM	DESCRIPTION	IGSCC CAT.	REL. REQ	4TH ISI INTERVAL PER1	PER2	PER3	IGSCC PROGRAM EXAM CREDIT	REMARKS
CORE SPRAY Drawing Number: ISI-I-14-2A Line Number: 10-GB-14										
GB-14-F62	C-F-2	C5.51	PIPE TO PIPE	-	Y	-	-	-	-	PRR-8, I2P2
GB-14-F7	C-F-2	C5.51	PIPE TO PIPE	-	Y	-	-	-	-	PRR-8
GB-14-F8	C-F-2	C5.51	ELBOW TO PIPE	-	Y	-	-	-	-	PRR-8
GB-14-F29	C-F-2	C5.51	PIPE TO VALVE	-	Y	-	-	-	-	PRR-8, I2P3
GB-14-F9	C-F-2	C5.51	ELBOW TO PIPE	-	Y	-	-	-	-	PRR-8, I2P2
GB-14-F28	C-F-2	C5.51	ELBOW TO PIPE	-	Y	-	-	-	-	PRR-8
GB-14-F27	C-F-2	C5.51	PIPE TO PIPE	-	Y	-	-	-	-	PRR-8, I2P2
GB-14-F17	C-F-2	C5.51	PUMP TO VALVE	-	Y	-	-	-	-	PRR-8, I2P1
GB-14-F16	C-F-2	C5.51	PIPE TO PIPE	-	Y	-	-	-	-	PRR-8
GB-14-3002-2-3	C-F-2	C5.51	ELBOW TO PIPE	-	Y	-	-	-	-	PRR-8
GB-14-F10	C-F-2	C5.51	ELBOW TO PIPE	-	Y	-	-	-	-	PRR-8
GB-14-2-2B	C-F-2	C5.51	PIPE TO BEND	-	Y	-	-	-	-	PRR-8
GB-14-4-3C	C-F-2	C5.51	ELBOW TO PIPE	-	Y	-	-	-	-	PRR-8, I2P1
GB-14-4-3B	C-F-2	C5.51	PIPE TO ELBOW	-	Y	-	-	-	-	PRR-8
GB-14-4-2G	C-F-2	C5.51	ELBOW TO PIPE	-	Y	-	-	-	-	PRR-8, I2P1
GB-14-15HL1(4)	C-C	C3.20	SUPPORT LUGS	-	-	-	-	-	-	EXEMPT, H-14-1-2SG
GB-14-4-2F	C-F-2	C5.51	PIPE TO ELBOW	-	Y	-	-	-	-	PRR-8
GB-14-4-2C	C-F-2	C5.51	ELBOW TO PIPE	-	Y	-	-	-	-	PRR-8
GB-14-3002-4-3	C-F-2	C5.51	ELBOW TO PIPE	-	Y	-	-	-	-	PRR-8

COMPONENT IDENTIFICATION	ASME CODE CAT	ASME CODE ITEM	DESCRIPTION	IGSCC CAT.	REL. REQ	4TH ISI INTERVAL PER1	PER2	PER3	IGSCC PROGRAM EXAM CREDIT	REMARKS
CORE SPRAY **Drawing Number: ISI-I-14-2A** **Line Number: 10-GB-14**										
GB-14-3002-4-2	C-F-2	C5.51	ELBOW TO PIPE	-	Y	-	-	-	-	PRR-8
GB-14-3002-4-1	C-F-2	C5.51	PIPE TO ELBOW	-	Y	-	-	-	-	PRR-8
GB-14-3002-3-2	C-F-2	C5.51	PIPE TO ELBOW	-	Y	-	-	-	-	PRR-8
GB-14-3002-2-4	C-F-2	C5.51	PIPE TO ELBOW	-	Y	-	-	-	-	PRR-8
GB-14-F15	C-F-2	C5.51	PIPE TO PIPE	-	Y	-	-	-	-	PRR-8
H-14-1-36	F-A	F1.20-B	RIGID HANGER	-	-	-	-	-	-	I2P1
H-14-1-38	F-A	F1.20-B	RIGID HANGER	-	-	-	-	-	-	I2P1 , GB-14-28HL2(4)
GB-14-2-1D	C-F-2	C5.51	PIPE TO ELBOW	-	Y	-	-	-	-	PRR-8, I2P2
H-14-1-4SH	F-A	F1.20-B	RIGID HANGER	-	-	1	-	-	-	I2P1, I3P1, GB-14-8HL1(4)
GB-14-VBW36A-1	C-G	C6.20	VALVE BODY WELD	-	-	1	-	-	-	I2P3, I3P3
H-14-1-5SR	F-A	F1.20-B	LATERAL RESTRAINT	-	-	-	-	-	-	I2P1
H-14-1-2SG	F-A	F1.20-B	GUIDE	-	-	-	-	-	-	I2P1, GB-14-15HL1(4)
H-14-1-7SG	F-A	F1.20-B	GUIDE	-	-	-	-	-	-	I2P1, GB-14-28HL1(4)
H-14-1-3SA	F-A	F1.20-B	ANCHOR	-	-	-	-	-	-	I2P1, GB-14-3SAPS1
GB-14-3SAPS1	**C-C**	**C3.20**	**WELDED ATTACHMENT**	-	-	-	-	-	-	**H-14-1-3SA**
H-14-1-3	F-A	F1.20-C	SPRING HANGER	-	-	-	-	-	-	I2P1
H-14-1-37	F-A	F1.20-C	SPRING HANGER	-	-	-	-	-	-	I2P1
GB-14-8HL1(4)	C-C	C3.20	SUPPORT LUGS	-	-	1	-	-	-	I2P1, I3P1, H-14-1-4SH

COMPONENT IDENTIFICATION	ASME CODE CAT	ASME CODE ITEM	DESCRIPTION	IGSCC CAT.	REL. REQ	4TH ISI INTERVAL PER1	PER2	PER3	IGSCC PROGRAM EXAM CREDIT	REMARKS
CORE SPRAY										
Drawing Number: ISI-I-14-2A										
Line Number: 10-GB-14										
GB-14-62PS2	C-C	C3.20	PIPE STANCHION	-	-	-	-	-	-	EXEMPT, H-14-1-1SR
GB-14-46PS1	C-C	C3.20	PIPE STANCHION	-	-	-	-	-	-	EXEMPT, H-14-1-22
GB-14-28HL2(4)	C-C	C3.20	SUPPORT LUGS	-	-	-	-	3	-	I2P3, I3P3, H-14-1-38
GB-14-28HL1(4)	C-C	C3.20	SUPPORT LUGS	-	-	-	-	-	-	EXEMPT, H-14-1-7SG
H-14-1-6SR	F-A	F1.20-B	LATERAL RESTRAINT	-	-	-	-	-	-	I2P1
DB-14-3002-5-2	C-F-2	C5.51	PIPE TO ELBOW	-	Y	-	-	-	-	PRR-8
H-14-1-22	F-A	F1.20-B	RIGID SUPPORT	-	-	-	2	-	-	I2P1, I3P2, GB-14-46PS1
GB-14-2-1C	C-F-2	C5.51	ELBOW TO PIPE	-	Y	-	-	-	-	PRR-8
GB-14-4-3D	C-F-2	C5.81	PIPE TO BR CONN	-	-	-	-	3	-	I3P3
GB-14-2-1B	C-F-2	C5.51	PIPE TO ELBOW	-	Y	-	-	-	-	PRR-8
H-14-1-39	F-A	F1.20-A	RIGID HANGER	-	-	-	-	-	-	I2P1
H-14-1-1SR	F-A	F1.20-B	RIGID HANGER	-	-	-	-	-	-	I2P1, GB-14-62PS2
H-14-1-2	F-A	F1.20-A	RIGID HANGER	-	-	-	-	-	-	I2P1
H-14-1-1	F-A	F1.20-A	RIGID HANGER	-	-	-	-	-	-	I2P1
GB-14-F31	C-F-2	C5.51	PIPE TO VALVE	-	Y	-	-	-	-	PRR-8, I2P2
GB-14-VBW36A-2	C-G	C6.20	VALVE BODY WELD	-	-	1	-	-	-	I2P3, I3P3

COMPONENT IDENTIFICATION	ASME CODE CAT	ASME CODE ITEM	DESCRIPTION	IGSCC CAT.	REL. REQ	4TH ISI INTERVAL PER1	PER2	PER3	IGSCC PROGRAM EXAM CREDIT	REMARKS
CORE SPRAY										
Drawing Number: ISI-I-14-2A										
Line Number: 12-HD-14										
HD-14-F23	C-F-2	C5.51	PIPE TO PUMP	-	Y	-	-	-	-	PRR-8, I2P1
HD-14-1-2D	C-F-2	C5.51	REDUCER TO PIPE	-	Y	-	-	-	-	PRR-8
HD-14-F24	C-F-2	C5.51	PIPE TO VALVE	-	Y	-	-	-	-	PRR-8
Line Number: 12-HE-26										
H-14-1-23S	F-A	F1.20-B	LATERAL RESTRAINT	-	-	-	-	-	-	I2P1
H-14-1-19S	F-A	F1.20-B	RIGID HANGER	-	-	-	-	-	-	I2P1
Line Number: 18-HD-14										
HD-14-1-1D	C-F-2	C5.81	PIPE TO BR CONN	-	Y	-	-	-	-	PRR-8
HD-14-22PS	C-C	C3.20	PIPE STANCHION	-	-	-	-	-	-	H-14-1-20S
HD-14-1-1E	C-F-2	C5.51	PIPE TO PIPE	-	Y	-	-	-	-	PRR-8
HD-14-1-1I	C-F-2	C5.51	PIPE TO FLANGE	-	Y	-	-	-	-	PRR-8, I2P1
HD-14-1-2B	C-F-2	C5.51	PIPE TO REDUCER	-	Y	-	-	-	-	PRR-8
H-14-1-20S	F-A	F1.20-B	RESTRAINT	-	-	-	2	-	-	I2P1, I3P2, HD-14-22PS
H-14-1-21	F-A	F1.20-B	RIGID HANGER	-	-	-	-	-	-	I2P1
HD-14-1-1B	C-F-2	C5.51	ELBOW TO PIPE	-	Y	-	-	-	-	PRR-8

COMPONENT IDENTIFICATION	ASME CODE CAT	ASME CODE ITEM	DESCRIPTION	IGSCC CAT.	REL. REQ	4TH ISI INTERVAL PER1	PER2	PER3	IGSCC PROGRAM EXAM CREDIT	REMARKS
CORE SPRAY										
Drawing Number: ISI-I-14-2A										
Line Number: 18-HL-14										
HL-14-50PS2	C-C	C3.20	PIPE STANCHION	-	-	-	-	-	-	H-14-1-20
HL-14-1-1C	C-F-2	C5.51	ELBOW TO PIPE	-	Y	-	-	-	-	PRR-8
H-14-1-6	F-A	F1.20-B	RIGID HANGER	-	-	-	-	-	-	I2P1, HL-14-50PS1
HL-14-50PS1	C-C	C3.20	PIPE STANCHION	-	-	-	-	-	-	H-14-1-6
HL-14-F6	N/A	N/A	PIPE TO ELBOW	-	-	-	-	-	-	-
H-14-1-20	F-A	F1.20-B	RIGID HANGER	-	-	-	-	-	-	I2P1 , HL-14-50PS2
H-14-1-21S	F-A	F1.20-B	LATERAL RESTRAINT	-	-	-	-	-	-	I2P1
HL-14-F7	C-F-2	C5.51	PIPE TO VALVE	-	Y	-	-	-	-	PRR-8

COMPONENT IDENTIFICATION	ASME CODE CAT	ASME CODE ITEM	DESCRIPTION	IGSCC CAT.	REL. REQ	4TH ISI INTERVAL PER1	PER2	PER3	IGSCC PROGRAM EXAM CREDIT	REMARKS
CORE SPRAY										
Drawing Number: ISI-I-14-2A										
Line Number: 12-HE-26										
HL-14-F50	C-F-2	C5.51	PIPE TO VALVE	-	Y	-	-	-	-	PRR-8, I2P2
HL-14-F49	C-F-2	C5.51	PIPE TO PIPE	-	Y	-	-	-	-	PRR-8, I2P1
HL-14-F48	C-F-2	C5.51	PIPE TO PIPE	-	Y	-	-	-	-	PRR-8, I2P1
HL-14-F4	C-F-2	C5.51	NOZZLE TO PIPE	-	Y	-	2	-	-	PRR-8, I2P2, I3P2
HL-14-1-4C	C-F-2	C5.51	ELBOW TO PIPE	-	Y	-	-	-	-	PRR-8
HL-14-1-4A	C-F-2	C5.51	VALVE TO PIPE	-	Y	-	-	-	-	PRR-8
HL-14-1-1B	C-F-2	C5.51	PIPE TO ELBOW	-	Y	-	-	-	-	PRR-8
HL-14-F5	N/A	N/A	PIPE TO ELBOW	-	-	-	-	-	-	-
HL-14-1-3B	N/A	N/A	ELBOW TO PIPE	-	-	-	-	-	-	-
HL-14-1-2F	N/A	N/A	PIPE TO PIPE	-	-	-	-	-	-	-
HL-14-1-4B	C-F-2	C5.51	PIPE TO ELBOW	-	Y	-	-	-	-	PRR-8
HL-14-1-2B	N/A	N/A	ELBOW TO PIPE	-	-	-	-	-	-	-
H-14-1-22S	F-A	F1.20-B	RIGID SUPPORT	-	-	-	-	-	-	I2P1
HD-14-F22	C-F-2	C5.51	VALVE TO ELBOW	-	Y -	-	-	-	-	PRR-8
H-14-1-54	F-A	F1.20-B	RIGID HANGER	-	-	-	-	-	-	I2P1
H-14-1-5	F-A	F1.20-B	RIGID HANGER	-	-	-	-	-	-	I2P2
H-14-1-4	F-A	F1.20-B	RIGID HANGER	-	-	-	2	-	-	I2P1, I3P2
HL-14-1-2C	N/A	N/A	PIPE TO PIPE	-	-	-	-	-	-	-

COMPONENT IDENTIFICATION	ASME CODE CAT	ASME CODE ITEM	DESCRIPTION	IGSCC CAT.	REL. REQ	4TH ISI INTERVAL PER1	PER2	PER3	IGSCC PROGRAM EXAM CREDIT	REMARKS
CORE SPRAY										
Drawing Number: ISI-I-14-2A										
Line Number: 18-HLB-14										
HLB-14-F48G	C-F-2	C5.51	ELBOW TO PIPE	-	Y	-	-	-	-	PRR-8
HLB-14-F48B	C-F-2	C5.51	PIPE TO ELBOW	-	Y	-	-	-	-	PRR-8
HLB-14-F48J	C-F-2	C5.51	PIPE TO PIPE	-	Y	-	-	-	-	PRR-8
HLB-14-F48I	C-F-2	C5.51	ELBOW TO PIPE	-	Y	-	-	-	-	PRR-8
HLB-14-F48H	C-F-2	C5.51	PIPE TO ELBOW	-	Y	-	2	-	-	PRR-8, I2P2, I3P2
HLB-14-F48F	C-F-2	C5.51	PIPE TO ELBOW	-	Y	-	-	-	-	PRR-8
HLB-14-F48E	C-F-2	C5.51	ELBOW TO PIPE	-	Y	-	-	-	-	PRR-8
HLB-14-F48C	C-F-2	C5.51	ELBOW TO PIPE	-	Y	-	-	-	-	PRR-8
HLB-14-F48A	C-F-2	C5.51	PIPE TO PIPE	-	Y	-	-	-	-	PRR-8
HLB-14-F48D	C-F-2	C5.51	PIPE TO ELBOW	-	Y	-	-	-	-	PRR-8
Line Number: 6-GB-14										
GB-14-F96	C-F-2	C5.51	PIPE TO ELBOW	-	Y	-	-	-	-	PRR-8
H-14-1-29	F-A	F1.20-C	SPRING HANGER	-	-	-	2	-	-	I2P1, I3P2, GB-14-97PS
GB-14-97PS	C-C	C3.20	PIPE STANCHION	-	-	-	-	-	-	H-14-1-29
GB-14-F97	C-F-2	C5.51	PIPE TO PIPE	-	Y	-	-	-	-	PRR-8
GB-14-F18	C-F-2	C5.51	PIPE TO ELBOW	-	Y	-	-	-	-	PRR-8, I2P2
GB-14-F95A	C-F-2	C5.51	PIPE TO ELBOW	-	Y	-	-	-	-	PRR-8
GB-14-F85	C-F-1	C5.11	VALVE TO PIPE	-	Y	1	-	-	-	PRR-8, I3P1
GB-14-F95	C-F-2	C5.51	ELBOW TO PIPE	-	Y	1	-	-	-	PRR-8

COMPONENT IDENTIFICATION	ASME CODE CAT	ASME CODE ITEM	DESCRIPTION	IGSCC CAT.	REL. REQ	4TH ISI INTERVAL PER1	PER2	PER3	IGSCC PROGRAM EXAM CREDIT	REMARKS
CORE SPRAY										
Drawing Number: ISI-I-14-2A										
Line Number: 6-GB-14										
GB-14-F83	C-F-2	C5.51	ELBOW TO VALVE	-	Y	-	-	-	-	PRR-8, I2P2
GB-14-F94	C-F-2	C5.51	ELBOW TO PIPE	-	Y	-	-	-	-	PRR-8
GB-14-F84	C-F-1	C5.11	PIPE TO VALVE	-	Y	1	-	-	-	PRR-8, I3P1
Line Number: 6-HD-14										
HD-14-F91	C-F-2	C5.51	TEE TO REDUCER	-	Y	-	-	3	-	PRR-8, I2P3, I3P3
HD-14-F90	C-F-2	C5.51	TEE TO PIPE	-	Y	-	-	-	-	PRR-8
HD-14-F92	C-F-2	C5.51	PIPE TO TEE	-	Y	-	-	-	-	PRR-8
HD-14-F93	C-F-2	C5.51	FLANGE TO PIPE	-	Y	-	-	-	-	PRR-8
HD-14-F27	C-F-2	C5.51	PIPE TO VALVE	-	Y	-	-	-	-	PRR-8

COMPONENT IDENTIFICATION	ASME CODE CAT	ASME CODE ITEM	DESCRIPTION	IGSCC CAT.	REL. REQ	4TH ISI INTERVAL PER1	PER2	PER3	IGSCC PROGRAM EXAM CREDIT	REMARKS
CORE SPRAY **Drawing Number: ISI-I-14-2B** **Line Number: N/A**										
14-P215B-HL	C-C	C3.30	PUMP INTEGRAL ATTMT	-	-	-	-	-	-	H-14-1-P215B
H-14-1-P215B	F-A	F1.40	PUMP SUPPORT	-	-	-	-	-	-	14-P215B-HL
GB-14-3PS	C-C	C3.20	PIPE STANCHION	-	-	-	-	-	-	EXEMPT
CORE SPRAY-4	C-H	C7.10	B CORE SPRAY SUCTION	-	Y	-	-	-	-	-
CORE SPRAY-5	C-H	C7.10	B CORE SPRAY SUCTION	-	Y	-	-	-	-	-
CORE SPRAY-6	C-H	C7.10	B CORE SPRAY DISCHARGE	-	Y	-	-	-	-	-
CORE SPRAY-8	C-H	C7.10	B CORE SPRAY DISCHARGE	-	Y	-	-	-	-	-
SLT CORE SPRAY-6	C-H	C7.10	PRESSURE BOUNDARY	-	Y	-	-	-	-	-
SLT CORE SPRAY-7	C-H	C7.10	PRESSURE BOUNDARY	-	Y	-	-	-	-	-
SLT CORE SPRAY-8	C-H	C7.10	PRESSURE BOUNDARY	-	Y	-	-	-	-	-

COMPONENT IDENTIFICATION	ASME CODE CAT	ASME CODE ITEM	DESCRIPTION	IGSCC CAT.	REL. REQ	4TH ISI INTERVAL PER1	PER2	PER3	IGSCC PROGRAM EXAM CREDIT	REMARKS
CORE SPRAY										
Drawing Number: ISI-I-14-2B										
Line Number: N/A										
HL-13-27PS1	C-C	C3.20	PIPE STANCHION	-	-	-	-	-	-	-
HL-13-27PS2	C-C	C3.20	PIPE STANCHION	-	-	-	-	-	-	-
HL-13-F27	C-F-2	C5.51	NOZZLE TO PIPE	-	Y	-	-	-	-	PRR-8, I2P2
HL-13-F28	C-F-2	C5.51	PIPE TO ELBOW	-	Y	-	-	-	-	PRR-8
HL-13-F29	C-F-2	C5.51	ELBOW TO VALVE	-	Y	-	-	-	-	PRR-8
HL-13-1-2B	C-F-2	C5.51	FLANGE TO PIPE	-	Y	-	-	-	-	PRR-8
HL-13-1-1B	C-F-2	C5.51	PIPE TO ELBOW	-	Y	-	-	-	-	PRR-8
HL-13-1-1C	C-F-2	C5.51	ELBOW TO PIPE	-	Y	-	-	-	-	PRR-8
HL-13-1-1D	C-F-2	C5.51	PIPE TO ELBOW	-	Y	-	-	-	-	PRR-8
HL-13-1-1E	C-F-2	C5.51	ELBOW TO PIPE	-	Y	-	-	-	-	PRR-8
HL-13-1-1F	C-F-2	C5.51	PIPE TO FLANGE	-	Y	-	-	-	-	PRR-8
H-13-1-1	F-A	F1.20-B	RIGID SUPPORT	-	-	-	-	-	-	I2P1
H-13-1-2	F-A	F1.20-B	RIGID SUPPORT	-	-	-	-	-	-	I2P1
Line Number: 6-HD-14										
HD-14-33HL1(4)	C-C	C3.20	WELDED ATTACHMENT	-	-	-	-	-	-	-
H-14-1-11SR	F-A	F1.20-B	SUPPORT GUIDE	-	-	-	-	-	-	I2P1, HD-14-33HL1(4)
HD-14-3-1A	C-F-2	C5.51	FLANGE TO PIPE	-	Y	-	-	-	-	PRR-8
HD-14-F32	C-F-2	C5.51	PIPE TO VALVE	-	Y	-	-	-	-	PRR-8

COMPONENT IDENTIFICATION	ASME CODE CAT	ASME CODE ITEM	DESCRIPTION	IGSCC CAT.	REL. REQ	4TH ISI INTERVAL PER1	PER2	PER3	IGSCC PROGRAM EXAM CREDIT	REMARKS
CORE SPRAY										
Drawing Number: ISI-I-14-2B										
Line Number: 10-DB-14										
DB-14-F24	C-F-2	C5.51	VALVE TO PIPE	-	Y	-	-	-	-	PRR-8
DB-14-VBW24B-2	C-G	C6.20	VALVE BODY WELD	-	-	-	-	-	-	
H-14-1-34	F-A	F1.20-B	RIGID HANGER	-	-	-	-	-	-	I2P1
DB-14-VBW24B-1	C-G	C6.20	VALVE BODY WELD	-	-	-	-	-	-	
Line Number: 10-DC/DB-14										
DB/DC-14-3001-4-1	C-F-1	C5.11	PIPE TO PIPE	-	Y	-	2	-	-	PRR-8, I2P2, I3P2
Line Number: 10-GB-14										
GB-14-1-2C	C-F-2	C5.51	ELBOW TO PIPE	-	Y	-	-	-	-	PRR-8
GB-14-1-1D	C-F-2	C5.51	PIPE TO ELBOW	-	Y	-	-	-	-	PRR-8, I2P3
GB-14-1-1C	C-F-2	C5.51	ELBOW TO PIPE	-	Y	-	-	-	-	PRR-8, I2P3
GB-14-3-2C	C-F-2	C5.51	PIPE TO PIPE	-	Y	-	-	-	-	PRR-8
GB-14-1-1B	C-F-2	C5.51	PIPE TO ELBOW	-	Y	-	-	-	-	PRR-8
GB-14-3-4I	C-F-2	C5.51	PIPE TO ELBOW	-	Y	-	-	-	-	PRR-8
GB-14-1-2B	C-F-2	C5.51	PIPE TO ELBOW	-	Y	-	-	-	-	PRR-8
GB-14-F2	C-F-2	C5.51	ELBOW TO PIPE	-	Y	-	-	-	-	PRR-8, I2P3
GB-14-F23	C-F-2	C5.51	ELBOW TO VALVE	-	Y	-	-	-	-	PRR-8
GB-14-F3	C-F-2	C5.51	PIPE TO PIPE	-	Y	-	-	-	-	PRR-8
GB-14-F35	C-F-2	C5.51	PIPE TO PIPE	-	Y	-	-	-	-	PRR-8, I2P3

COMPONENT IDENTIFICATION	ASME CODE CAT	ASME CODE ITEM	DESCRIPTION	IGSCC CAT.	REL. REQ	4TH ISI INTERVAL PER1	PER2	PER3	IGSCC PROGRAM EXAM CREDIT	REMARKS
CORE SPRAY **Drawing Number: ISI-I-14-2B** **Line Number: 10-GB-14**										
GB-14-F36	C-F-2	C5.51	PIPE TO PIPE	-	Y	-	-	-	-	PRR-8
GB-14-F37	C-F-2	C5.51	PIPE TO ELBOW	-	Y	-	-	-	-	PRR-8
GB-14-F38	C-F-2	C5.51	VALVE TO PIPE	-	Y	-	-	-	-	PRR-8
GB-14-F39	C-F-2	C5.51	PIPE TO VALVE	-	Y	-	-	3	-	PRR-8, I2P3, I3P3
GB-14-F3A	C-F-2	C5.51	PIPE TO PIPE	-	Y	-	-	-	-	PRR-8, I2P3
GB-14-F40	C-F-2	C5.51	PUMP TO PIPE	-	Y	-	-	-	-	PRR-8, I2P3, I3P3
GB-14-3-4B	C-F-2	C5.51	PIPE TO ELBOW	-	Y	-	-	-	-	PRR-8
GB-14-F21	C-F-2	C5.51	ELBOW TO PIPE	-	Y	-	2	-	-	PRR-8, I2P2, I3P2
GB-14-3-3B	C-F-2	C5.51	ELBOW TO PIPE	-	Y	-	-	-	-	PRR-8
GB-14-F1	C-F-2	C5.51	PIPE TO PIPE	-	Y	-	-	-	-	PRR-8
GB-14-3001-3-2	C-F-2	C5.51	PIPE TO ELBOW	-	Y	-	-	-	-	PRR-8
GB-14-3001-3-1	C-F-2	C5.51	ELBOW TO ELBOW	-	Y	-	-	-	-	PRR-8
GB-14-3001-2-1	C-F-2	C5.51	PIPE TO ELBOW	-	Y	-	-	-	-	PRR-8
GB-14-1HL1(4)	C-C	C3.20	SUPPORT LUGS	-	-	-	2	-	-	EXEMPT, I3P2, H-14-1-14SA
GB-14-3001-1X-2	C-F-2	C5.51	PIPE TO ELBOW	-	Y	-	-	-	-	PRR-8
GB-14-3001-1X-1	C-F-2	C5.51	FLANGE TO PIPE	-	Y	-	-	-	-	PRR-8
GB-14-3001-1-1	C-F-2	C5.51	PIPE TO FLANGE	-	Y	-	-	-	-	PRR-8
GB-14-3-4C	C-F-2	C5.51	ELBOW TO PIPE	-	Y	-	-	-	-	PRR-8
GB-14-F63	C-F-2	C5.51	PIPE TO PIPE	-	Y	-	-	-	-	PRR-8

COMPONENT IDENTIFICATION	ASME CODE CAT	ASME CODE ITEM	DESCRIPTION	IGSCC CAT.	REL. REQ	4TH ISI INTERVAL PER1	PER2	PER3	IGSCC PROGRAM EXAM CREDIT	REMARKS
CORE SPRAY										
Drawing Number: ISI-I-14-2B										
Line Number: 10-GB-14										
GB-14-35HL1(4)	C-C	C3.20	SUPPORT LUGS	-	-	-	-	-	-	H-14-1-12SA
GB-14-VBW36B-1	C-G	C6.20	VALVE BODY WELD	-	-	-	-	-	-	-
GB-14-3-4D	C-F-2	C5.81	PIPE TO WELDOLET	-	-	-	-	3	-	I2P3, I3P3
GB-14-38PS	C-C	C3.20	PIPE STANCHION	-	-	-	-	-	-	H-14-1-14
H-14-1-15	F-A	F1.20-C	SPRING HANGER	-	-	-	-	-	-	I2P1, I3P3
H-14-1-16	F-A	F1.20-C	SPRING HANGER	-	-	-	-	-	-	I2P1, GB-14-16PS1
GB-14-16PS1	**C-C**	**C3.20**	**WELDED ATTACHMENT**	-	-	-	-	-	-	**H-14-1-16**
H-14-1-31	F-A	F1.20-C	SPRING HANGER	-	-	-	-	-	-	I2P3, GB-14-21PS
H-14-1-14SA	F-A	F1.20-B	ANCHOR	-	-	-	-	-	-	I2P1, GB-14-1HL1(4)
H-14-1-13SG	F-A	F1.20-B	GUIDE	-	-	-	-	-	-	I2P1 , GB-14-2HL2(4)
H-14-1-33	F-A	F1.20-B	RIGID HANGER	-	-	-	-	3	-	I2P1, I3P3, GB-14-22HL1(4)
H-14-1-12SA	F-A	F1.20-B	ANCHOR	-	-	-	-	-	-	I2P1 , GB-14-35HL1(4)
H-14-1-1221	F-A	F1.20-B	LATERAL RESTRAINT	-	-	-	-	-	-	I2P1
GB-14-2HL2(4)	C-C	C3.20	SUPPORT LUGS	-	-	-	-	-	-	H-14-1-13SG
H-14-1-10	F-A	F1.20-A	RIGID HANGER	-	-	1	-	-	-	I2P1, I3P1, GB-14-2HL1(4)
GB-14-2HL1(4)	C-C	C3.20	SUPPORT LUGS	-	-	1	-	-	-	I2P1 , I3P1, H-14-1-10
GB-14-VBW36B-2	C-G	C6.20	VALVE BODY WELD	-	-	-	-	-	-	-
GB-14-F22	C-F-2	C5.51	ELBOW TO PIPE	-	Y	-	-	-	-	PRR-8

COMPONENT IDENTIFICATION	ASME CODE CAT	ASME CODE ITEM	DESCRIPTION	IGSCC CAT.	REL. REQ	4TH ISI INTERVAL PER1	PER2	PER3	IGSCC PROGRAM EXAM CREDIT	REMARKS
CORE SPRAY										
Drawing Number: ISI-I-14-2B										
Line Number: 10-GB-14										
GB-14-22HL1(4)	C-C	C3.20	SUPPORT LUGS	-	-	-	-	3	-	I2P3, I3P3, H-14-1-33
GB-14-21PS	C-C	C3.20	PIPE STANCHION	-	-	-	-	-	-	H-14-1-31
H-14-1-14	F-A	F1.20-B	RIGID HANGER	-	-	-	-	-	-	I2P1, GB-14-38PS
Line Number: 12-HD-14										
HD-14-2-2D	C-F-2	C5.51	REDUCER TO FLANGE	-	Y	-	-	3	-	PRR-8, I3P3
HD-14-2-1E	C-F-2	C5.51	REDUCER TO PIPE	-	Y	-	-	-	-	PRR-8
HD-14-F21	C-F-2	C5.51	VALVE TO PIPE	-	Y	-	-	-	-	PRR-8
HD-14-F20	C-F-2	C5.51	FLANGE TO PUMP	-	Y	-	-	-	-	PRR-8, I2P3
Line Number: 12-HE-26										
H-14-1-30S	F-A	F1.20-B	LATERAL RESTRAINT	-	-	-	-	-	-	I2P1
H-14-1-26S	F-A	F1.20-B	RIGID HANGER	-	-	-	-	-	-	I2P1, HE-14-26SPS1 [CLASS 4]
HE-14-26SPS1	**C-C**	**C3.20**	**WELDED ATTACHMENT**	-	-	-	-	-	-	**H-14-1-26S [CLASS 4]**
Line Number: 16-HD-26										
HD-26-F21	C-F-2	N/A	PIPE TO VALVE	-	Y	-	-	-	-	PRR-8

COMPONENT IDENTIFICATION	ASME CODE CAT	ASME CODE ITEM	DESCRIPTION	IGSCC CAT.	REL. REQ	4TH ISI INTERVAL PER1	PER2	PER3	IGSCC PROGRAM EXAM CREDIT	REMARKS
CORE SPRAY										
Drawing Number: ISI-I-14-2B										
Line Number: 18-HD-14										
HD-14-2-1D	C-F-2	C5.81	PIPE TO WELDOLET	-	Y	-	-	-	-	PPR-8
H-14-1-12	F-A	F1.20-B	RIGID HANGER	-	-	-	-	3	-	I2P1, I3P3, HD-14-19PS2
H-14-1-13	F-A	F1.20-B	RIGID HANGER	-	-	-	-	-	-	I2P1 , HD-14-19PS1
H-14-1-27S	F-A	F1.20-B	LATERAL RESTRAINT	-	-	-	-	-	-	I2P1
HD-14-19PS2	C-C	C3.20	PIPE STANCHION	-	-	-	-	-	-	EXEMPT, H-14-1-12
HD-14-19PS1	C-C	C3.20	PIPE STANCHION	-	-	-	-	-	-	EXEMPT, H-14-1-13
HD-14-2-1B	C-F-2	C5.51	ELBOW TO PIPE	-	Y	-	-	-	-	PRR-8
HD-14-2-1G	C-F-2	C5.51	PIPE TO FLANGE	-	Y	-	-	-	-	PRR-8, I2P3
HD-14-2-2B	C-F-2	C5.51	FLANGE TO REDUCER	-	Y	-	-	-	-	PRR-8
HD-14-F19	C-F-2	C5.51	VALVE TO ELBOW	-	Y	-	-	3	-	PRR-8, I2P3, I3P3
Line Number: 18-HL-14										
HL-14-F14	C-F-2	C5.51	NOZZLE TO PIPE	-	Y	-	-	-	-	PRR-8, I2P3
HL-14-51PS	C-C	C3.20	PIPE STANCHION	-	-	-	-	-	-	EXEMPT, H-14-1-9
HL-14-F12	N/A	N/A	PIPE TO ELBOW	-	-	-	-	-	-	-
HL-14-2-4C	C-F-2	C5.51	ELBOW TO PIPE	-	Y	-	-	-	-	PRR-8
H-14-1-28S	F-A	F1.20-B	LATERAL RESTRAINT	-	-	-	-	-	-	I2P1
H-14-1-29S	F-A	F1.20-B	LATERAL RESTRAINT	-	-	-	-	-	-	I2P1
H-14-1-55	F-A	F1.20-B	RIGID HANGER	-	-	-	-	-	-	I2P1
H-14-1-7	F-A	F1.20-B	RIGID HANGER	-	- -	-	-	-	-	I2P1

COMPONENT IDENTIFICATION	ASME CODE CAT	ASME CODE ITEM	DESCRIPTION	IGSCC CAT.	REL. REQ	4TH ISI INTERVAL PER1	PER2	PER3	IGSCC PROGRAM EXAM CREDIT	REMARKS
CORE SPRAY										
Drawing Number: ISI-I-14-2B										
Line Number: 18-HL-14										
H-14-1-8	F-A	F1.20-B	RIGID HANGER	-	-	-	-	-	-	I2P1
H-14-1-9	F-A	F1.20-B	RIGID HANGER	-	-	-	-	-	-	I2P1, HL-14-51PS
HL-14-2-2B	N/A	N/A	ELBOW TO ELBOW	-	-	-	-	-	-	-
HL-14-2-3B	N/A	N/A	ELBOW TO PIPE	-	-	-	-	-	-	-
HL-14-F52	C-F-2	C5.51	PIPE TO PIPE	-	Y	-	-	-	-	PRR-8
HL-14-F51	C-F-2	C5.51	PIPE TO FLANGE	-	Y	-	2	-	-	PRR-8, I2P2, I3P2
HL-14-F53	N/A	N/A	PIPE TO PIPE	-	-	-	-	-	-	-
HL-14-F11	C-F-2	C5.51	PIPE TO VALVE	-	Y	-	-	-	-	PRR-8, I2P3
HL-14-2-4B	C-F-2	C5.51	PIPE TO ELBOW	-	Y	-	-	-	-	PRR-8
HL-14-2-4A	C-F-2	C5.51	FLANGE TO PIPE	-	Y	-	-	-	-	PRR-8, I2P2
HL-14-2-1C	C-F-2	C5.51	ELBOW TO PIPE	-	Y	-	-	-	-	PRR-8
HL-14-2-1B	C-F-2	C5.51	PIPE TO ELBOW	-	Y	-	-	-	-	PRR-8
HL-14-F13	N/A	N/A	PIPE TO ELBOW	-	-	-	-	-	-	-
HL-14-2-2C	N/A	N/A	ELBOW TO PIPE	-	-	-	-	-	-	-

COMPONENT IDENTIFICATION	ASME CODE CAT	ASME CODE ITEM	DESCRIPTION	IGSCC CAT.	REL. REQ	4TH ISI INTERVAL PER1	PER2	PER3	IGSCC PROGRAM EXAM CREDIT	REMARKS
CORE SPRAY										
Drawing Number: ISI-I-14-2B										
Line Number: 18-HLB-14										
HLB-14-F14F	C-F-2	C5.51	PIPE TO ELBOW	-	Y	-	-	-	-	PRR-8
HLB-14-F14J	C-F-2	C5.51	PIPE TO PIPE	-	Y	-	-	-	-	PRR-8
HLB-14-F14E	C-F-2	C5.51	ELBOW TO PIPE	-	Y	-	-	-	-	PRR-8
HLB-14-F14A	C-F-2	C5.51	PIPE TO PIPE	-	Y	-	-	-	-	PRR-8
HLB-14-F14B	C-F-2	C5.51	PIPE TO ELBOW	-	Y	-	-	-	-	PRR-8
HLB-14-F14H	C-F-2	C5.51	PIPE TO ELBOW	-	Y	-	-	-	-	PRR-8, I2P2
HLB-14-F14D	C-F-2	C5.51	PIPE TO ELBOW	-	Y	-	-	-	-	PRR-8
HLB-14-F14I	C-F-2	C5.51	ELBOW TO PIPE	-	Y	-	-	-	-	PRR-8
HLB-14-F14G	C-F-2	C5.51	ELBOW TO PIPE	-	Y	-	-	-	-	PRR-8
HLB-14-F14C	C-F-2	C5.51	ELBOW TO PIPE	-	Y	-	-	-	-	PRR-8
Line Number: 6-GB-14										
GB-14-F33	C-F-1	C5.11	VALVE TO FLANGE	-	Y	1	-	-	-	PRR-8, I2P3
GB-14-F34	C-F-1	C5.11	PIPE TO VALVE	-	Y	-	-	3	-	PRR-8, I2P3, I3P3
GB-14-3-4E	C-F-2	C5.51	REDUCER TO PIPE	-	Y	-	-	-	-	PRR-8, I2P1
GB-14-3-4F	C-F-2	C5.51	PIPE TO ELBOW	-	Y	-	-	-	-	PRR-8
GB-14-3-4G	C-F-2	C5.51	ELBOW TO PIPE	-	Y	-	-	-	-	PRR-8

COMPONENT IDENTIFICATION	ASME CODE CAT	ASME CODE ITEM	DESCRIPTION	IGSCC CAT.	REL. REQ	4TH ISI INTERVAL PER1	PER2	PER3	IGSCC PROGRAM EXAM CREDIT	REMARKS
CORE SPRAY										
Drawing Number: ISI-P215A										
Line Number: Pump P215A										
14-P215A-HL	C-C	C3.30	PUMP INTEGRAL ATTMT	-	-	-	-	3	-	I2P3, I3P3, H-14-1-P215A
H-14-1-P215A	F-A	F1.40	PUMP SUPPORT	-	-	-	-	3	-	I2P3, I3P3, 14-P215A-HL

COMPONENT IDENTIFICATION	ASME CODE CAT	ASME CODE ITEM	DESCRIPTION	ASME CODE EXAM	REL REQ	4TH ISI INTERVAL PER1	PER2	PER3	WELD LTH OR THICK	REMARKS

Intentionally Left Blank
Table Reserved for Future Use

COMPONENT IDENTIFICATION	ASME CODE CAT	ASME CODE ITEM	DESCRIPTION	ASME CODE EXAM	REL REQ	4TH ISI INTERVAL PER1	PER2	PER3	FAC PROGRAM EXAM CREDIT	REMARKS
FW Drawing Number: ISI-I-6-1 Line Number: 12-DL-6										
6-N4D-12	R-A	R1.20	PIPE TO PIPE	-	Y	-	-	-	-	(B-J, B9.11) PRR-10, I2P3
6-N4C-11	R-A	R1.20	ELBOW TO PIPE	-	Y	1	-	-	Y	RI-ISI; (B-J, B9.11); PRR-10
6-N4C-12	R-A	R1.20	TEE TO ELBOW	-	Y	-	-	-	-	(B-J, B9.11) PRR-10
6-N4C-2	R-A	R1.11	PIPE TO PIPE	-	Y	-	-	3	-	RI-ISI; (B-J, B9.11); PRR-10, I3P3
6-N4C-3	R-A	R1.11	ELBOW TO PIPE	-	Y	-	-	-	-	(B-J, B9.11) PRR-10
6-N4C-4	R-A	R1.11	PIPE TO ELBOW	-	Y	-	-	-	-	(B-J, B9.11) PRR-10
6-N4C-5	R-A	R1.20	PIPE TO PIPE	-	Y	-	-	-	-	(B-J, B9.11) PRR-10
6-N4C-6	R-A	R1.20	PIPE TO PIPE	-	Y	-	-	-	-	(B-J, B9.11) PRR-10
6-N4C-8	R-A	R1.20	PIPE TO ELBOW	-	Y	-	-	-	-	(B-J, B9.11) PRR-10, I2P1
6-N4D-9	R-A	R1.20	ELBOW TO PIPE	-	Y	-	-	-	-	(B-J, B9.11) PRR-10, I2P3
6-N4D-10	R-A	R1.20	PIPE TO ELBOW	-	Y	-	-	-	-	(B-J, B9.11) PRR-10, I2P3
6-N4B-8	R-A	R1.11	ELBOW TO PIPE	-	Y	1	-	-	-	RI-ISI; (B-J, B9.11); PRR-10, I2P1, I3P1
6-N4D-13	R-A	R1.20	REDUCER TO PIPE	-	Y	-	-	-	-	(B-J, B9.11) PRR-10, I2P3
6-N4D-2	R-A	R1.11	PIPE TO PIPE	-	Y	-	-	3	-	RI-ISI; (B-J, B9.11); PRR-10, I3P3
6-N4D-3	R-A	R1.11	ELBOW TO PIPE	-	Y	-	-	-	-	(B-J, B9.11) PRR-10
6-N4D-4	R-A	R1.11	PIPE TO ELBOW	-	Y	-	-	-	-	(B-J, B9.11) PRR-10
6-N4D-5	R-A	R1.20	PIPE TO PIPE	-	Y	-	-	-	-	(B-J, B9.11) PRR-10
6-N4D-6	R-A	R1.20	PIPE TO PIPE	-	Y	-	-	-	-	(B-J, B9.11) PRR-10
6-N4D-7	R-A	R1.20	ELBOW TO PIPE	-	Y	-	-	-	-	(B-J, B9.11) PRR-10

COMPONENT IDENTIFICATION	ASME CODE CAT	ASME CODE ITEM	DESCRIPTION	ASME CODE EXAM	REL REQ	4TH ISI INTERVAL PER1	PER2	PER3	FAC PROGRAM EXAM CREDIT	REMARKS
FW Drawing Number: ISI-I-6-1 Line Number: 12-DL-6										
6-N4D-8	R-A	R1.20	PIPE TO ELBOW	-	Y	-	-	-	-	(B-J, B9.11) PRR-10, I2P3
6-N4D-11	N/A	N/A	PIPE TO PIPE	-	-	-	-	-	-	-
6-N4A-9	R-A	R1.11	PIPE TO PIPE	-	Y	-	-	-	-	(B-J, B9.11) PRR-10, I2P2
6-N4A-10	R-A	R1.11	PIPE TO ELBOW	-	Y	-	-	-	-	(B-J, B9.11) PRR-10, I2P2
6-N4A-11	R-A	R1.11	PIPE TO PIPE	-	Y	-	-	-	-	(B-J, B9.11) PRR-10, I2P3
6-N4A-12	R-A	R1.11	REDUCER TO PIPE	-	Y	-	-	3	-	RI-ISI; (B-J, B9.11); PRR-10, I2P3, I3P3
6-N4A-2	R-A	R1.11	PIPE TO PIPE	-	Y	-	-	-	-	(B-J, B9.11) PRR-10
6-N4A-3	R-A	R1.11	ELBOW TO PIPE	-	Y	-	-	-	-	(B-J, B9.11) PRR-10
6-N4A-4	R-A	R1.11	PIPE TO ELBOW	-	Y	-	-	-	-	(B-J, B9.11) PRR-10
6-N4A-5	R-A	R1.11	PIPE TO PIPE	-	Y	-	-	-	-	(B-J, B9.11) PRR-10
6-N4A-6	R-A	R1.11	ELBOW TO PIPE	-	Y	-	-	-	-	(B-J, B9.11) PRR-10
6-N4C-10	R-A	R1.20	PIPE TO ELBOW	-	Y	-	-	-	-	(B-J, B9.11) PRR-10
6-N4A-8	R-A	R1.11	PIPE TO PIPE	-	Y	-	-	-	-	(B-J, B9.11) PRR-10, I2P1
6-N4B-9	R-A	R1.11	PIPE TO ELBOW	-	Y	-	-	-	-	(B-J, B9.11) PRR-10
6-N4B-10	R-A	R1.11	ELBOW TO PIPE	-	Y	-	-	-	-	(B-J, B9.11) PRR-10
6-N4B-11	R-A	R1.11	TEE TO ELBOW	-	Y	-	-	3	-	RI-ISI; (B-J, B9.11) PRR-10, I3P3
6-N4B-2	R-A	R1.11	PIPE TO PIPE	-	Y	-	-	-	-	(B-J, B9.11) PRR-10
6-N4B-3	R-A	R1.11	ELBOW TO PIPE	-	Y	-	-	-	-	(B-J, B9.11) PRR-10
6-N4B-4	R-A	R1.11	PIPE TO ELBOW	-	Y	-	-	-	-	(B-J, B9.11) PRR-10

COMPONENT IDENTIFICATION	ASME CODE CAT	ASME CODE ITEM	DESCRIPTION	ASME CODE EXAM	REL REQ	4TH ISI INTERVAL PER1	PER2	PER3	FAC PROGRAM EXAM CREDIT	REMARKS
FW Drawing Number: ISI-I-6-1 Line Number: 12-DL-6										
6-N4B-5	R-A	R1.11	PIPE TO PIPE	-	Y	-	-	-	-	(B-J, B9.11) PRR-10
6-N4B-6	R-A	R1.11	ELBOW TO PIPE	-	Y	-	-	-	-	(B-J, B9.11) PRR-10
6-N4B-7	R-A	R1.11	PIPE TO ELBOW	-	Y	-	-	-	-	(B-J, B9.11) PRR-10, I2P1
6-N4C-9	R-A	R1.20	ELBOW TO PIPE	-	Y	1	-	-	-	(B-J, B9.11) PRR-10, I2P1, I3P1
6-N4A-7	R-A	R1.11	PIPE TO ELBOW	-	Y	1	-	-	-	(B-J, B9.11) PRR-10, I2P1, I3P1
H-6-1-113	F-A	F1.10-C	SPRING HANGER	-	-	-	-	-	-	I2P1
H-6-1-102	F-A	F1.10-C	SPRING HANGER	-	-	-	-	3	-	I2P1, I3P1, 6-N4A-9HL1(8)
H-6-1-SS-10	N/A	N/A	SNUBBER	-	-	-	-	-	-	I2P1
H-6-1-104	F-A	F1.10-C	SPRING HANGER	-	-	-	-	-	-	I2P2
H-6-1-106	F-A	F1.10-C	SPRING HANGER	-	-	1	-	-	-	I2P1, I3P1
H-6-1-108	F-A	F1.10-C	SPRING HANGER	-	-	-	-	-	-	I2P1, 6-N4D-5HL1(4)
H-6-1-109	F-A	F1.10-C	SPRING HANGER	-	-	-	-	-	-	I2P1, 6-N4D-9HL1(8)
H-6-1-110	F-A	F1.10-C	SPRING HANGER	-	-	-	-	-	-	I2P1
H-6-1-101	F-A	F1.10-C	SPRING HANGER	-	-	-	-	3	-	I2P1, I3P3, 6-N4A-5HL1(4)
H-6-1-112	F-A	F1.10-C	SPRING HANGER	-	-	-	-	-	-	I2P2, 6-N4C-7HL1(4)
H-6-1-103	F-A	F1.10-C	SPRING HANGER	-	-	-	-	-	-	I2P1
6-N4C-7	R-A	R1.20	ELBOW TO PIPE	-	Y	-	-	-	-	(B-J, B9.11) PRR-10
H-6-1-SS-3	N/A	N/A	SNUBBER	-	-	-	2	-	-	I2P2, I3P2
H-6-1-SS-4	N/A	N/A	SNUBBER	-	-	-	-	-	-	I2P1

COMPONENT IDENTIFICATION	ASME CODE CAT	ASME CODE ITEM	DESCRIPTION	ASME CODE EXAM	REL REQ	4TH ISI INTERVAL PER1	PER2	PER3	FAC PROGRAM EXAM CREDIT	REMARKS
FW										
Drawing Number: ISI-I-6-1										
Line Number: 12-DL-6										
H-6-1-SS-5	N/A	N/A	SNUBBER	-	-	-	2	-	-	I2P2, I3P2
H-6-1-SS-6	N/A	N/A	SNUBBER	-	-	-	-	-	-	I2P1
H-6-1-SS-7	N/A	N/A	SNUBBER	-	-	-	-	-	-	I2P1
H-6-1-SS-8	N/A	N/A	SNUBBER	-	-	-	-	-	-	I2P1
H-6-1-SS-9	N/A	N/A	SNUBBER	-	-	-	-	-	-	I2P1
H-6-1-111	F-A	F1.10-C	SPRING HANGER	-	-	-	-	-	-	I2P1, 6-N4D-13HL1(8)
6-N4A-9HL1(8)	B-K	B10.20	SUPPORT LUG	-	-	-	-	3	-	I2P3, I3P3, H-6-1-102
6-N4D-5HL1(4)	B-K	B10.20	SUPPORT LUG	-	-	-	-	-	-	I2P1, H-6-1-108
6-N4D-9HL1(8)	B-K	B10.20	SUPPORT LUG	-	-	-	-	-	-	I2P1, H-6-1-109
6-N4D-13HL1(8)	B-K	B10.20	SUPPORT LUG	-	-	-	-	-	-	I2P1, H-6-1-111
H-6-1-105	F-A	F1.10-C	SPRING HANGER	-	-	-	-	3	-	I2P1, 6-N4B-5HL1(4)
6-N4B-5HL1(4)	B-K	B10.20	SUPPORT LUG	-	-	-	-	3	-	I2P3, I3P3, H-6-1-105
6-N4A-5HL1(4)	B-K	B10.20	SUPPORT LUG	-	-	-	-	-	-	I2P3, H-6-1-101
6-N4C-7HL1(4)	B-K	B10.20	SUPPORT LUG	-	-	-	-	-	-	I2P1, H-6-1-112

COMPONENT IDENTIFICATION	ASME CODE CAT	ASME CODE ITEM	DESCRIPTION	ASME CODE EXAM	REL REQ	4TH ISI INTERVAL PER1	PER2	PER3	FAC PROGRAM EXAM CREDIT	REMARKS
FW Drawing Number: ISI-I-6-1 Line Number: 18-DL-6										
6-VB-58A	B-G-2	B7.70	VALVE BOLTING	-	Y	-	2	-	-	PRR-14, I2P1, I3P2
6-VB-57B	B-G-2	B7.70	VALVE BOLTING	-	Y	1	-	-	-	PRR-14, I2P1, I3P1
6-VB-58B	B-G-2	B7.70	VALVE BOLTING	-	Y	-	2	-	-	PRR-14, I2P1, I3P2
6-VB-62A	B-G-2	B7.70	VALVE BOLTING	-	Y	-	-	3	-	PRR-14, I2P3, I3P3
6-VB-62B	B-G-2	B7.70	VALVE BOLTING	-	Y	-	-	3	-	PRR-14, I2P3, I3P3
6-B-2	R-A	R1.20	PIPE TO ELBOW	-	Y	-	-	-	-	(B-J, B9.11) PRR-10
6-B-3	R-A	R1.20	PIPE TO PIPE	-	Y	-	-	-	-	(B-J, B9.11) PRR-10
6-B-4	R-A	R1.20	VALVE TO PIPE	-	Y	-	-	-	-	(B-J, B9.11) PRR-10
6-B-5	R-A	R1.20	ELBOW TO VALVE	-	Y	-	-	-	-	(B-J, B9.11) PRR-10
6-B-6	R-A	R1.20	VALVE TO ELBOW	-	Y	-	-	-	-	(B-J, B9.11) PRR-10
6-A-1	R-A	R1.11	PIPE TO TEE	-	Y	-	-	-	-	(B-J, B9.11) PRR-10
6-A-2	R-A	R1.11	ELBOW TO PIPE	-	Y	-	-	-	-	(B-J, B9.11) PRR-10
6-A-3	R-A	R1.11	PIPE TO ELBOW	-	Y	-	-	-	-	(B-J, B9.11) PRR-10
6-A-4	R-A	R1.11	ELBOW TO PIPE	-	Y	-	-	-	-	(B-J, B9.11) PRR-10
6-A-5	R-A	R1.11	PIPE TO ELBOW	-	Y	-	-	-	-	(B-J, B9.11) PRR-10
6-A-7	R-A	R1.11	PIPE TO VALVE	-	Y	-	-	-	-	(B-J, B9.11) PRR-10
6-A-9	R-A	R1.11	PIPE TO VALVE	-	Y	-	-	-	-	(B-J, B9.11) PRR-10, I2P2
6-A-9A	R-A	R1.11	FLUED HEAD TO PIPE	-	Y	-	-	-	-	(B-J, B9.11) PRR-10
6-A-10	R-A	R1.11	PIPE TO FLUED HEAD	-	Y	-	2	-	-	RI-ISI; (B-J, B9.11); I2P2, I3P2

COMPONENT IDENTIFICATION	ASME CODE CAT	ASME CODE ITEM	DESCRIPTION	ASME CODE EXAM	REL REQ	4TH ISI INTERVAL PER1	PER2	PER3	FAC PROGRAM EXAM CREDIT	REMARKS
FW Drawing Number: ISI-I-6-1 Line Number: 18-DL-6										
6-A-6	R-A	R1.11	VALVE TO PIPE	-	Y	-	-	-	-	(B-J, B9.11) PRR-10
6-A-8	R-A	R1.11	VALVE TO ELBOW	-	Y	-	-	-	-	(B-J, B9.11) PRR-10
6-B-1	R-A	R1.20	ELBOW TO TEE	-	Y	-	-	-	-	(B-J, B9.11) PRR-10
6-B-7	R-A	R1.20	PIPE TO VALVE	-	Y	1	-	-	-	(B-J, B9.11) PRR-10, I2P1, I3P1
6-VI-62B	B-M-2	B12.50	VALVE INTERNALS	-	-	-	-	-	-	-
6-A-6HL1(4)	B-K	B10.20	SUPPORT LUG	-	-	-	-	-	-	I2P3 , H-6-1-107
6-B-3HL1(4)	B-K	B10.20	SUPPORT LUG	-	-	-	-	-	-	I2P1 , H-6-1-114
6-N4D-14	R-A	R1.20	PIPE TO REDUCER	-	Y	1	-	-	Y	RI-ISI; (B-J, B9.11); PRR-10, I2P3
6-N4D-15	R-A	R1.20	PIPE TO PIPE	-	Y	1	-	-	Y	RI-ISI; (B-J, B9.11); PRR-10
6-N4D-16	R-A	R1.20	TEE TO PIPE	-	Y	1	-	-	Y	RI-ISI; (B-J, B9.11); PRR-10
6-VI-57A	B-M-2	B12.50	VALVE INTERNALS	-	-	-	-	-	-	-
6-VI-57B	B-M-2	B12.50	VALVE INTERNALS	-	-	-	-	-	-	-
6-VI-58A	B-M-2	B12.50	VALVE INTERNALS	-	-	-	-	-	-	-
6-VB-57A	B-G-2	B7.70	VALVE BOLTING	-	Y	1	-	-	-	PRR-14, I2P1, I3P1
H-6-1-SS-1	N/A	N/A	SNUBBER	-	-	-	-	-	-	I2P1
6-VI-62A	B-M-2	B12.50	VALVE INTERNALS	-	-	-	-	-	-	-
H-6-1-X9A	F-A	F1.10-B	ANCHOR	-	-	-	2	-	-	I2P1, I3P2
H-6-1-X9B	F-A	F1.10-B	ANCHOR	-	-	-	-	-	-	I2P2
H-6-1-107	F-A	F1.10-C	SPRING HANGER	-	-	-	-	3	-	I2P1, I3P3, 6-A-6HL1(4)

COMPONENT IDENTIFICATION	ASME CODE CAT	ASME CODE ITEM	DESCRIPTION	ASME CODE EXAM	REL REQ	4TH ISI INTERVAL PER1	PER2	PER3	FAC PROGRAM EXAM CREDIT	REMARKS
FW										
Drawing Number: ISI-I-6-1										
Line Number: 18-DL-6										
6-A-4HL1(8)	B-K	B10.20	SUPPORT LUG	-	-	-	-	-	-	I2P2
H-6-1-114	F-A	F1.10-C	SPRING HANGER	-	-	-	-	-	-	I2P2, 6-B-3HL1(4)
H-6-1-SS-2	N/A	N/A	SNUBBER	-	Y	-	-	-	-	I2P1
6-N4A-13	R-A	R1.11	TEE TO REDUCER	-	Y	-	-	3	-	RI-ISI; (B-J, B9.11); I2P3, I3P3
6-B-8	R-A	R1.20	PIPE TO FLUED HEAD	-	Y	-	-	-	-	(B-J, B9.11) PRR-10, I2P2
6-B-7A	R-A	R1.20	PIPE TO PIPE	-	Y	-	-	-	-	(B-J, B9.11) PRR-10
6-VI-58B	B-M-2	B12.50	VALVE INTERNALS	-	-	-	-	-	-	-

COMPONENT IDENTIFICATION	ASME CODE CAT	ASME CODE ITEM	DESCRIPTION	ASME CODE EXAM	REL REQ	4TH ISI INTERVAL PER1	PER2	PER3	FAC PROGRAM EXAM CREDIT	REMARKS
FW										
Drawing Number: ISI-I-6-1A										
Line Number: N/A										
SLT FW-1	C-H	C7.10	PRESSURE BOUNDARY	-	-	1	2	3	-	I2P1
Line Number: 16-DE-6										
DE-6-10-5-2	C-F-2	C5.51	PIPE TO REDUCER	-	Y	-	-	-	-	PRR-8
DE-6-10-8-2	C-F-2	C5.51	PIPE TO REDUCER	-	Y	-	-	-	-	PRR-8
H-6-1-67	F-A-CL4	F1.20-B	RIGID HANGER	-	-	-	-	-	-	I2P3, I3P3
H-6-1-59	F-A-CL4	F1.20-B	RIGID HANGER	-	-	-	-	-	-	I2P3, I3P3
Line Number: 16-DL-6										
H-6-1-60	F-A	F1.20-B	RIGID HANGER	-	-	-	-	-	-	I2P1
H-6-1-68	F-A	F1.20-B	RIGID HANGER	-	-	-	2	-	-	I2P2, I3P2
Line Number: 18-DE/DL-6										
DE/DL-6-F68	C-F-2	C5.51	REDUCER TO VALVE	-	Y	-	-	3	-	PRR-8, I2P3, I3P3
DE/DL-6-F123	C-F-2	C5.51	REDUCER TO VALVE	-	Y	-	-	-	-	PRR-8

COMPONENT IDENTIFICATION	ASME CODE CAT	ASME CODE ITEM	DESCRIPTION	ASME CODE EXAM	REL REQ	4TH ISI INTERVAL PER1	PER2	PER3	FAC PROGRAM EXAM CREDIT	REMARKS
FW Drawing Number: ISI-I-6-1A Line Number: 18-DL-6										
6-A-11	R-A	R1.11	PIPE TO PIPE	-	Y	-	-	-	-	(B-J, B9.11); PRR-10
6-A-12	R-A	R1.11	PIPE TO PIPE	-	-	-	2	-	-	RI-ISI; (B-J, B9.11); I3P2
6-A-13	R-A	R1.11	TEE TO PIPE	-	Y	-	-	-	-	(B-J, B9.11) PRR-10
6-A-14	R-A	R1.11	VALVE TO TEE	-	Y	-	-	-	-	(B-J, B9.11) PRR-10
6-B-9	R-A	R1.20	PIPE TO PIPE	-	Y	-	-	-	-	(B-J, B9.11) PRR-10
6-B-10	R-A	R1.20	PIPE TO PIPE	-	Y	-	-	-	-	(B-J, B9.11) PRR-10
6-B-11	R-A	R1.20	PIPE TO PIPE	-	Y	-	-	-	-	(B-J, B9.11) PRR-10
6-B-12	R-A	R1.20	TEE TO PIPE	-	Y	-	-	-	-	(B-J, B9.11) PRR-10
6-B-13	R-A	R1.20	VALVE TO TEE	-	Y	-	-	-	-	(B-J, B9.11) PRR-10
H-6-1-61	F-A	F1.10-B	RIGID HANGER	-	-	-	-	-	-	I2P1
H-6-1-69	F-A	F1.10-A	RIGID HANGER	-	-	-	2	-	-	I2P2, I3P2

COMPONENT IDENTIFICATION	ASME CODE CAT	ASME CODE ITEM	DESCRIPTION	ASME CODE EXAM	REL REQ	4TH ISI INTERVAL PER1	PER2	PER3	WELD LTH OR THICK	REMARKS
HPCI Drawing Number: ISI-I-23-1 Line Number: 10-EB-23										
23-O-3	R-A	R1.20	ELBOW TO PIPE	-	Y	-	-	-	-	(B-J, B9.11) PRR-10
23-O-4	R-A	R1.20	PIPE TO PIPE	-	Y	-	-	-	-	(B-J, B9.11) PRR-10
23-O-5	R-A	R1.20	PIPE TO ELBOW	-	Y	-	-	-	-	(B-J, B9.11) PRR-10
23-O-6	R-A	R1.20	ELBOW TO PIPE	-	Y	-	-	-	-	(B-J, B9.11) PRR-10
23-O-7	R-A	R1.20	PIPE TO ELBOW	-	Y	-	-	-	-	(B-J, B9.11) PRR-10, I2P1
23-O-8	R-A	R1.20	ELBOW TO PIPE	-	Y	-	-	-	-	(B-J, B9.11) PRR-10, I2P1
23-O-8BC	R-A	R1.20	BRANCH CONNECTION	-	Y	-	-	-	-	(B-J, B9.31) PRR-10, 1.5" STEAM LINE
23-O-9	R-A	R1.20	PIPE TO VALVE	-	Y	-	-	-	-	(B-J, B9.11) PRR-10, I2P1, I3P1
23-O-13	R-A	R1.20	ELBOW TO PIPE	-	Y	-	-	-	-	(B-J, B9.11) PRR-10
23-O-14	R-A	R1.20	PIPE TO ELBOW	-	Y	-	-	-	-	(B-J, B9.11) PRR-10, I2P3
23-O-15	R-A	R1.20	ELBOW TO PIPE	-	Y	-	-	-	-	(B-J, B9.11) PRR-10
23-O-16	R-A	R1.20	PIPE TO PENETRATION	-	Y	-	-	-	-	(B-J, B9.11) PRR-10, I2P2
23-O-17	R-A	R1.20	PENETRATION TO PIPE	-	Y	-	2	-	-	RI-ISI; (B-J, B9.11); PRR-10, I2P2, I3P2
23-O-18	R-A	R1.20	PIPE TO ELBOW	-	-	-	2	-	-	RI-ISI; (B-J, B9.11); I2P2
23-O-19	R-A	R1.20	ELBOW TO PIPE	-	Y	-	-	-	-	(B-J, B9.11) PRR-10
23-O-20	R-A	R1.20	PIPE TO ELBOW	-	Y	-	-	-	-	(B-J, B9.11) PRR-10
23-O-21	R-A	R1.20	ELBOW TO PIPE	-	Y	-	-	-	-	(B-J, B9.11) PRR-10
23-O-22R	R-A	R1.20	PIPE TO VALVE	-	Y	-	-	-	-	(B-J, B9.11) PRR-10
EB-23-VBW5-2	N/A	N/A	VALVE BODY WELD	-	Y	-	-	-	-	(B-J, B9.11) PRR-10

COMPONENT IDENTIFICATION	ASME CODE CAT	ASME CODE ITEM	DESCRIPTION	ASME CODE EXAM	REL REQ	4TH ISI INTERVAL PER1	PER2	PER3	WELD LTH OR THICK	REMARKS
HPCI Drawing Number: ISI-I-23-1 Line Number: 10-EB-23										
23-O-1	R-A	R1.20	WELD-O-LET	-	Y	-	-	-	-	(B-J, B9.11) PRR-10
23-O-10	R-A	R1.20	VALVE TO ELBOW	-	Y	-	-	-	-	(B-J, B9.11) PRR-10, I2P1, I3P1
23-O-11	R-A	R1.20	ELBOW TO PIPE	-	Y	-	-	-	-	(B-J, B9.11) PRR-10
23-O-12	R-A	R1.20	PIPE TO ELBOW	-	Y	-	-	-	-	(B-J, B9.11) PRR-10
23-VB-2301-5	B-G-2	B7.70	VALVE BOLTING	-	Y	-	-	3	-	PRR-14, I2P2, I3P3
23-VB-2301-4	B-G-2	B7.70	VALVE BOLTING	-	Y	1	-	-	-	PRR-14, I2P1, I3P1
23-O-2	R-A	R1.20	PIPE TO ELBOW	-	Y	-	-	-	-	(B-J, B9.11) PRR-10
23-O-8HL1(8)	B-K	B10.10	SUPPORT LUGS	-	-	-	-	-	-	I2P1, H-23-1-81
EB-23-VBW4-1	B-M-1	B12.40	VALVE BODY WELD	-	Y	-	-	3	-	PRR-10, I3P3
EB-23-VBW4-2	B-M-1	B12.40	VALVE BODY WELD	-	Y	-	-	3	-	PRR-10, I3P3
23-VI-2301-4	B-M-2	B12.50	VALVE INTERNALS	-	-	-	-	-	-	-
23-VI-2301-5	B-M-2	B12.50	VALVE INTERNALS	-	-	-	-	-	-	-
EB-23-VBW5-1	N/A	N/A	VALVE BODY WELD	-	Y	-	-	-	-	(B-J) PRR-10
H-23-1-X52	F-A	F1.10-B	ANCHOR	-	-	-	-	-	-	I2P3, I3P3
H-23-1-80	F-A	F1.10-C	SPRING HANGER	-	-	-	2	-	-	I2P1, I3P2
H-23-1-81	F-A	F1.10-C	SPRING HANGER	-	-	-	-	-	-	I2P1, 23-0-8HL1(8)
H-23-1-82	F-A	F1.10-C	SPRING HANGER	-	-	-	-	-	-	I2P1
H-23-1-SS13	N/A	N/A	SNUBBER	-	-	-	-	-	-	I2P1

COMPONENT IDENTIFICATION	ASME CODE CAT	ASME CODE ITEM	DESCRIPTION	ASME CODE EXAM	REL REQ	4TH ISI INTERVAL PER1	PER2	PER3	WELD LTH OR THICK	REMARKS
HPCI										
Drawing Number: ISI-I-23-1										
Line Number: 10-EB-23/14-DB-23										
H-23-1-SS14	N/A	N/A	SNUBBER	-	-	-	-	-	-	I2P1
Line Number: 14-DB-23										
23-I-16	R-A	R1.20	PIPE TO ELBOW	-	-	-	2	-	-	RI-ISI; (B-J, B9.11) I3P2
23-I-17	R-A	R1.20	VALVE TO PIPE	-	-	-	2	-	-	RI-ISI; (B-J, B9.11) I2P1, I3P2
23-I-5A	R-A	R1.20	PIPE TO PIPE	-	Y	-	-	-	-	(B-J, B9.11) PRR-10
23-I-5	R-A	R1.20	PIPE TO VALVE	-	Y	-	-	-	-	(B-J, B9.11) PRR-10
23-I-6	R-A	R1.20	ELBOW TO PIPE	-	Y	-	-	-	-	(B-J, B9.11) PRR-10
23-I-14	R-A	R1.20	PIPE TO ELBOW	-	Y	-	-	-	-	(B-J, B9.11) PRR-10
H-23-1-26SA	F-A	F1.20-B	ANCHOR	-	-	-	-	-	-	I2P1, 23-I-12PS(2)
23-I-13	R-A	R1.20	ELBOW TO PIPE	-	Y	-	-	-	-	(B-J, B9.11 PRR-10
23-I-12	R-A	R1.20	PIPE TO PIPE	-	Y	-	-	-	-	(B-J, B9.11) PRR-10, I2P2
23-I-11	R-A	R1.20	PIPE TO ELBOW	-	Y	-	-	-	-	(B-J, B9.11) PRR-10, I2P3
23-I-10	R-A	R1.20	ELBOW TO PIPE	-	Y	-	-	-	-	(B-J, B9.11) PRR-10
23-VB-2301-8	B-G-2	B7.70	VALVE BOLTING	-	Y	-	-	3	-	PRR-14, I2P2, I3P3
23-I-15	R-A	R1.20	ELBOW TO PIPE	-	Y	-	-	-	-	(B-J, B9.11) PRR-10
H-23-1-77	F-A	F1.10-C	SPRING HANGER	-	-	-	2	-	-	I2P1, I3P2
23-VI-2301-8	B-M-2	B12.50	VALVE INTERNALS	-	-	-	-	-	-	-
H-23-1-75	F-A	F1.10-A	RIGID HANGER	-	-	-	2	-	-	I2P1, I3P2

COMPONENT IDENTIFICATION	ASME CODE CAT	ASME CODE ITEM	DESCRIPTION	ASME CODE EXAM	REL REQ	4TH ISI INTERVAL PER1	PER2	PER3	WELD LTH OR THICK	REMARKS
HPCI										
Drawing Number: ISI-I-23-1										
Line Number: 14-DB-23										
H-23-1-1235	F-A	F1.10-B	LATERAL RESTRAINT	-	-	-	-	-	-	I2P1
H-23-1-1248	F-A	F1.10-B	LATERAL RESTRAINT	-	-	-	-	-	-	I2P1
23-I-9	R-A	R1.20	PIPE TO ELBOW	-	Y	-	-	-	-	(B-J, B9.11) PRR-10
H-23-1-73	F-A	F1.10-C	SPRING HANGER	-	-	-	-	-	-	I2P1
23-I-7	R-A	R1.20	PIPE TO ELBOW	-	Y	-	-	-	-	(B-J, B9.11) PRR-10
H-23-1-25SR	F-A	F1.20-B	RIGID HANGER	-	-	-	-	-	-	I2P1
23-I-12PS(2)	B-K	B10.10	PIPE STANCHION	-	-	-	-	-	-	I2P3, H-23-1-26SA
23-I-12HL1(6)	N/A	N/A	SUPPORT LUGS	-	-	-	-	-	-	-
23-I-8	R-A	R1.20	ELBOW TO PIPE	-	Y	-	-	-	-	(B-J, B9.11) PRR-10
H-23-1-76	F-A	F1.10-B	RIGID HANGER	-	-	-	-	-	-	I2P1
Line Number: 14-DL-6										
23-I-1	R-A	R1.20	PIPE TO TEE	-	Y	-	-	-	-	(B-J, B9.11) PRR-10
23-I-2	R-A	R1.20	PIPE TO PIPE	-	Y	-	-	-	-	(B-J, B9.11) PRR-10
23-I-3	R-A	R1.11	ELBOW TO PIPE	-	Y	-	2	-	-	RI-ISI; (B-J, B9.11); PRR-10, I3P2
23-I-4	R-A	R1.11	VALVE TO ELBOW	-	Y	-	-	-	-	(B-J, B9.11) PRR-10
23-VB-2301-7	B-G-2	B7.70	VALVE BOLTING	-	Y	-	-	3	-	PRR-14, I2P3, I3P3
23-VI-2301-7	B-M-2	B12.50	VALVE INTERNALS	-	-	-	-	-	-	-

COMPONENT IDENTIFICATION	ASME CODE CAT	ASME CODE ITEM	DESCRIPTION	ASME CODE EXAM	REL REQ	4TH ISI INTERVAL PER1	PER2	PER3	WELD LTH OR THICK	REMARKS
HPCI										
Drawing Number: ISI-I-23-2										
Line Number: N/A										
SLT HPCI-4	C-H	C7.10	PRESSURE BOUNDARY	VT-2	-	1	2	3	-	-
EB-23-F66C	N/A	N/A	FLANGE TO TEE	-	-	-	-	-	-	-
Line Number: 10-EB-23										
EB-23-F60	C-F-2	C5.51	PIPE TO ELBOW	-	Y	-	-	-	-	PRR-8
EB-23-F59R	C-F-2	C5.51	PIPE TO VALVE	-	Y	-	-	-	-	PRR-8, I2P1
EB-23-F58R	C-F-2	C5.51	VALVE TO PIPE	-	Y	-	-	3	-	PRR-8, I2P3, I3P3
EB-23-F61	C-F-2	C5.51	ELBOW TO PIPE	-	Y	-	-	-	-	PRR-8, I2P3
EB-23-2-1D	C-F-2	C5.51	PIPE TO TEE	-	Y	-	-	-	-	PRR-8
EB-23-F62	C-F-2	C5.51	PIPE TO ELBOW	-	Y	-	-	-	-	PRR-8
EB-23-F63	C-F-2	C5.51	PIPE TO PIPE	-	Y	-	-	-	-	PRR-8
EB-23-F13R	C-F-2	C5.51	VALVE TO PIPE	-	Y	-	-	-	-	PRR-8, I2P2
EB-23-F100C	C-F-2	C5.51	PIPE TO FLANGE	-	Y	-	-	-	-	PRR-8, I2P3
EB-23-F100B	C-F-2	C5.51	ELBOW TO PIPE	-	Y	-	-	-	-	PRR-8
EB-23-F100A	C-F-2	C5.51	PIPE TO ELBOW	-	Y	-	-	-	-	PRR-8

COMPONENT IDENTIFICATION	ASME CODE CAT	ASME CODE ITEM	DESCRIPTION	ASME CODE EXAM	REL REQ	4TH ISI INTERVAL PER1	PER2	PER3	WELD LTH OR THICK	REMARKS
HPCI Drawing Number: ISI-I-23-2 Line Number: 10-EB-23										
EB-23-2-1H	C-F-2	C5.51	PIPE TO CAP	-	Y	-	-	-	-	PRR-8
EB-23-1-2C	C-F-2	C5.51	PIPE TO ELBOW	-	Y	-	-	-	-	PRR-8
EB-23-59HL1(4)	C-C	C3.20	SUPPORT LUGS	-	-	-	2	-	-	I2P2, I3P2, H-23-1-28S
EB-23-60HL1(4)	C-C	C3.20	SUPPORT LUGS	-	-	-	-	-	-	I2P3, H-23-1-19S
EB-23-62HL1(4)	C-C	C3.20	SUPPORT LUGS	-	-	1	-	-	-	I2P1, I3P1, H-23-1-11
EB-23-1-1B	C-F-2	C5.51	ELBOW TO PIPE	-	Y	-	-	-	-	PRR-8
EB-23-1-1C	C-F-2	C5.51	PIPE TO ELBOW	-	Y	-	-	-	-	PRR-8
EB-23-1-1D	C-F-2	C5.51	ELBOW TO PIPE	-	Y	-	-	-	-	PRR-8
EB-23-2-1G	C-F-2	C5.51	TEE TO PIPE	-	Y	-	-	-	-	PRR-8
EB-23-1-2B	C-F-2	C5.51	ELBOW TO PIPE	-	Y	-	-	-	-	PRR-8
EB-23-2-1E	C-F-2	C5.51	TEE TO PIPE	-	Y	-	-	-	-	PRR-8, I2P1
EB-23-1-5B	C-F-2	C5.51	ELBOW TO PIPE	-	Y	-	-	-	-	PRR-8
EB-23-1-5C	C-F-2	C5.51	PIPE TO ELBOW	-	Y	-	-	-	-	PRR-8, I2P3
EB-23-1-6B	C-F-2	C5.51	PIPE TO PIPE	-	Y	-	-	-	-	PRR-8
EB-23-2-1B	C-F-2	C5.51	ELBOW TO PIPE	-	Y	-	-	-	-	PRR-8
EB-23-2-1C	C-F-2	C5.51	PIPE TO PIPE	-	Y	-	-	-	-	PRR-8
EB-23-F66AR	C-F-2	C5.51	PIPE TO PIPE	-	Y	-	-	-	-	PRR-8, I2P3
EB-23-1-1E	C-F-2	C5.51	PIPE TO ELBOW	-	Y	-	-	-	-	PRR-8
H-23-1-11	F-A	F1.20-C	SPRING HANGER	-	-	-	-	3	-	I2P3, I3P3, EB-23-62HL1(4)

COMPONENT IDENTIFICATION	ASME CODE CAT	ASME CODE ITEM	DESCRIPTION	ASME CODE EXAM	REL REQ	4TH ISI INTERVAL PER1	PER2	PER3	WELD LTH OR THICK	REMARKS
HPCI Drawing Number: ISI-I-23-2 Line Number: 10-EB-23										
EB-23-VBW3-1	N/A	N/A	VALVE BODY WELD	-	-	-	-	-	-	-
EB-23-F66B	N/A	N/A	TEE TO PIPE	-	-	-	-	-	-	-
EB-23-F66A	N/A	N/A	PIPE TO TEE	-	-	-	-	-	-	-
EB-23-F58B	N/A	N/A	ELBOW TO PIPE	-	-	-	-	-	-	-
EB-23-2-2D	N/A	N/A	PIPE TO NOZZLE	-	-	-	-	-	-	-
EB-23-2-2C	N/A	N/A	ELBOW TO PIPE	-	-	-	-	-	-	-
EB-23-2-2B	N/A	N/A	PIPE TO ELBOW	-	-	-	-	-	-	-
H-23-1-9	F-A	F1.20-C	SPRING HANGER	-	-	-	-	-	-	I2P1
H-23-1-8	F-A	F1.20-C	SPRING HANGER	-	-	-	-	-	-	I2P3, I3P3
H-23-1-6	F-A	F1.20-C	SPRING HANGER	-	-	-	-	-	-	I2P1, EB-23-13HL1(4)
H-23-1-20S	N/A	N/A	SNUBBER	-	-	-	-	-	-	I2P1
H-23-1-19S	N/A	N/A	SNUBBER	-	-	-	-	-	-	I2P1, EB-23-60HL1(4
EB-23-F65	C-F-2	C5.51	PIPE TO ELBOW	-	Y	-	-	-	-	PRR-8
H-23-1-13	F-A	F1.20-C	SPRING HANGER	-	-	-	-	-	-	I2P1
EB-23-F64	C-F-2	C5.51	ELBOW TO PIPE	-	Y	-	-	-	-	PRR-8
H-23-1-10	F-A	F1.20-C	SPRING HANGER	-	-	-	-	-	-	I2P1
H-23-1-7	F-A	F1.20-B	RIGID HANGER	-	-	-	-	-	-	I2P1
H-23-1-16S	F-A	F1.20-B	LATERAL RESTRAINT	-	-	1	-	-	-	I2P1, I3P1
H-23-1-15S	F-A	F1.20-B	LATERAL RESTRAINT	-	-	-	-	-	-	I2P1, EB-23-15SPS1

COMPONENT IDENTIFICATION	ASME CODE CAT	ASME CODE ITEM	DESCRIPTION	ASME CODE EXAM	REL REQ	4TH ISI INTERVAL PER1	PER2	PER3	WELD LTH OR THICK	REMARKS
HPCI **Drawing Number: ISI-I-23-2** **Line Number: 10-EB-23**										
EB-23-15SPS1	**C-C**	**C3.20**	**WELDED ATTACHMENT**	-	-	-	-	-	-	**H-23-1-15S**
H-23-1-159	F-A	F1.20-B	GUIDE	-	-	-	-	-	-	I2P3, EB-23-159PS1
EB-23-159PS1	**C-C**	**C3.20**	**WELDED ATTACHMENT**	-	-	-	-	-	-	H-23-1-159
H-23-1-158	F-A	F1.20-B	GUIDE	-	-	-	-	-	-	I2P3
H-23-1-28S	F-A	F1.20-A	RIGID HANGER	-	-	-	-	-	-	I2P1, EB-23-59HL1(4)
EB-23-F96	C-F-2	C5.51	ELBOW TO PIPE	-	Y	-	-	-	-	PRR-8
EB-23-F66BR	C-F-2	C5.51	PIPE TO PIPE	-	Y	-	-	-	-	PRR-8
EB-23-VBW3-2	N/A	N/A	VALVE BODY WELD	-	-	-	-	-	-	-
EB-23-F66	C-F-2	C5.51	PIPE TO ELBOW	-	Y	-	2	-	-	PRR-8, I2P1, I3P2
EB-23-13HL1(4)	C-C	C3.20	SUPPORT LUGS	-	-	1	-	-	-	I2P1, I3P1, H-23-1-6
H-23-1-17S	N/A	N/A	SNUBBER	-	-	-	-	-	-	I2P1

COMPONENT IDENTIFICATION	ASME CODE CAT	ASME CODE ITEM	DESCRIPTION	ASME CODE EXAM	REL REQ	4TH ISI INTERVAL PER1	PER2	PER3	WELD LTH OR THICK	REMARKS
HPCI										
Drawing Number: ISI-I-23-3										
Line Number: N/A										
HL-23-F67D	C-F-2	C5.51	ELBOWLET TO REDUCER	-	Y	-	-	-	-	PRR-8
HL-23-F67C	C-F-2	C5.51	ELBOW TO ELBOWLET	-	Y	-	-	-	-	PRR-8
SLT HPCI-6	C-H	C7.10	PRESSURE BOUNDRY	-	-	1	2	3	-	-
Line Number: 16-HB-23										
H-23-1-20	N/A	N/A	SPRING HANGER	-	-	-	-	-	-	I2P1
H-23-1-19	N/A	N/A	SPRING HANGER	-	-	-	-	-	-	I2P1
H-23-1-11SS	N/A	N/A	SNUBBER	-	-	-	-	-	-	I2P1
HB-23-F88	C-F-2	C5.51	PIPE TO FLANGE	-	Y	-	-	-	-	PRR-8
HB-23-F87	C-F-2	C5.51	REDUCER TO PIPE	-	Y	-	2	-	-	PRR-8, I2P2, I3P2
HB-23-F76	N/A	N/A	PIPE TO PIPE	-	-	-	-	-	-	EXEMPT
Line Number: 18-HB-23										
HB-23-2-1G	C-F-2	C5.51	PIPE TO TEE	-	Y	-	-	-	-	PRR-8
HB-23-2-1H	C-F-2	C5.70	FLANGE TO PIPE	-	Y	-	2	-	-	PRR-8, I2P2, I3P2

COMPONENT IDENTIFICATION	ASME CODE CAT	ASME CODE ITEM	DESCRIPTION	ASME CODE EXAM	REL REQ	4TH ISI INTERVAL PER1	PER2	PER3	WELD LTH OR THICK	REMARKS
HPCI **Drawing Number: ISI-I-23-3** **Line Number: 20-HB-23**										
HB-23-F72	C-F-2	C5.51	PIPE TO ELBOW	-	Y	-	-	-	-	PRR-8
HB-23-2-1D	C-F-2	C5.51	PIPE TO ELBOW	-	Y	-	-	-	-	PRR-8
HB-23-2-1E	C-F-2	C5.51	ELBOW TO PIPE	-	Y	-	-	-	-	PRR-8
HB-23-F95	C-F-2	C5.51	ELBOW TO PIPE	-	Y	-	-	-	-	PRR-8, I2P3
HB-23-F75	C-F-2	C5.51	PIPE TO TEE	-	Y	-	2	-	-	PRR-8, I2P2, I3P2
HB-23-F74	C-F-2	C5.51	PIPE TO VALVE	-	Y	-	-	-	-	PRR-8, I2P2
HB-23-2-7A	N/A	N/A	FLANGE TO PIPE	-	-	-	-	-	-	-
HB-23-F72A	C-F-2	C5.51	PIPE TO ELBOW	-	Y	-	-	-	-	PRR-8
HB-23-F71	C-F-2	C5.51	PIPE TO VALVE	-	Y	-	-	-	-	PRR-8
HB-23-2-6B	C-F-2	C5.51	ELBOW TO PIPE	-	Y	-	-	-	-	PRR-8
HB-23-2-5B	C-F-2	C5.51	ELBOW TO PIPE	-	Y	-	-	-	-	PRR-8
HB-23-2-3A	C-F-2	C5.51	FLANGE TO PIPE	-	Y	-	-	-	-	PRR-8
HB-23-2-2D-H	C-F-2	C5.51	PIPE TO FLANGE	-	Y	-	-	-	-	PRR-8
HB-23-2-2D-G	C-F-2	C5.51	ELBOW TO PIPE	-	Y	-	-	-	-	PRR-8, I2P1
HB-23-2-2A-E	C-F-2	C5.51	TEE TO PIPE	-	Y	-	-	-	-	PRR-8, I2P1
HB-23-F73	C-F-2	C5.51	VALVE TO PIPE	-	Y	-	-	-	-	PRR-8, I2P2
HB-23-2-7B	N/A	N/A	PIPE TO ELBOW	-	-	-	-	-	-	-
H-23-1-15SS	N/A	N/A	SNUBBER	-	-	1	-	-	-	I3P1
H-23-1-15	F-A	F1.20-C	SPRING HANGER	-	-	1	-	-	-	I3P1

COMPONENT IDENTIFICATION	ASME CODE CAT	ASME CODE ITEM	DESCRIPTION	ASME CODE EXAM	REL REQ	4TH ISI INTERVAL PER1	PER2	PER3	WELD LTH OR THICK	REMARKS
HPCI **Drawing Number: ISI-I-23-3** **Line Number: 20-HB-23**										
H-23-1-14SS	N/A	N/A	SNUBBER	-	-	-	-	-	-	I2P1
H-23-1-14	F-A	F1.20-C	SPRING HANGER	-	-	-	-	-	-	I2P1
H-23-1-13SS	N/A	N/A	SNUBBER	-	-	-	-	-	-	I2P1
H-23-1-12SS	N/A	N/A	SNUBBER	-	-	1	-	-	-	I2P1, I3P1, HB-23-75HL1(8)
HB-23-2-1A	C-F-2	C5.51	PIPE TO CAP	-	Y	-	-	-	-	PRR-8
HB-23-2-7F	N/A	N/A	PIPE TO FLANGE	-	-	-	-	-	-	-
H-23-1-16	F-A	F1.20-B	RIGID HANGER	-	-	-	-	-	-	I2P1
HB-23-75HL1(8)	C-C	C3.20	SUPPORT LUGS	-	-	1	-	-	-	I2P1, I3P1, H-23-1-12SS
HB-23-2-7C	N/A	N/A	ELBOW TO PIPE	-	-	-	-	-	-	-
HB-23-2-7D	N/A	N/A	PIPE TO ELBOW	-	-	-	-	-	-	-
HB-23-2-7E	N/A	N/A	ELBOW TO PIPE	-	-	-	-	-	-	-
HL-23-F70	C-F-2	C5.51	VALVE TO PIPE	-	Y	-	-	-	-	PRR-8
HB-23-2-1B	C-F-2	C5.51	TEE TO PIPE	-	Y	-	-	-	-	PRR-8
HL-23-4-1B	C-F-2	C5.51	ELBOW TO REDUCER	-	Y	-	-	3	-	PRR-8, I2P3, I3P3
HB-23-2-1C	C-F-2	C5.51	TEE TO PIPE	-	Y	-	-	-	-	PRR-8
HB-23-2-2A-C	C-F-2	C5.51	TEE TO REDUCER	-	Y	-	-	-	-	PRR-8
H-23-1-17	F-A	F1.20-B	RIGID HANGER	-	-	-	-	-	-	I2P1

COMPONENT IDENTIFICATION	ASME CODE CAT	ASME CODE ITEM	DESCRIPTION	ASME CODE EXAM	REL REQ	4TH ISI INTERVAL PER1	PER2	PER3	WELD LTH OR THICK	REMARKS
HPCI **Drawing Number: ISI-I-23-3** **Line Number: 24-HL-23**										
HL-23-69HL1(24)	C-C	C3.20	SUPPORT LUGS	-	-	-	-	3	-	I2P3, I3P3, H-23-1-86
HL-23-2-1B	C-F-2	C5.51	PIPE TO PIPE	-	Y	-	-	-	-	PRR-8
HL-23-F67	C-F-2	C5.51	PIPE TO NOZZLE	-	Y	-	2	-	-	PRR-8, I2P1, I3P2
HL-23-F31	C-F-2	C5.51	FLANGE TO PIPE	-	Y	-	-	-	-	PRR-8
HL-23-F68	C-F-2	C5.51	PIPE TO ELBOW	-	Y	-	-	-	-	PRR-8
HL-23-F69	C-F-2	C5.51	REDUCER TO PIPE	-	Y	-	-	-	-	PRR-8
H-23-1-18	F-A	F1.20-B	RIGID HANGER	-	-	-	-	-	-	I2P1
H-23-1-86	N/A	N/A	SNUBBER	-	-	-	2	-	-	I2P1, I3P2, HL-23-69HL1(24)
HL-23-F28	C-F-2	C5.51	PIPE TO FLANGE	-	Y	-	-	-	-	PRR-8

COMPONENT IDENTIFICATION	ASME CODE CAT	ASME CODE ITEM	DESCRIPTION	ASME CODE EXAM	REL REQ	4TH ISI INTERVAL PER1	PER2	PER3	WELD LTH OR THICK	REMARKS
HPCI										
Drawing Number: ISI-I-23-4										
Line Number: N/A										
H-23-1-P205	F-A	F1.40	PUMP SUPPORT	-	-	-	-	3	-	I2P3, I3P3
SLT HPCI-3	C-H	C7.10	PRESSURE BOUNDARY	VT-2	-	1	2	3	-	-
Line Number: 14-HD-23										
HD-23-F12	C-F-2	C5.51	REDUCER TO PUMP	-	Y	-	-	-	-	PRR-8, I2P3
Line Number: 16-HD-23										
HD-23-15PS	C-C	C3.20	PIPE STANCHION	-	-	-	-	-	-	H-23-1-25
HD-23-3-6D	C-F-2	C5.51	PIPE TO FLANGE	-	Y	-	-	-	-	PRR-8, I2P3
HD-23-3-7B	C-F-2	C5.51	PIPE TO REDUCER	-	Y	-	-	-	-	PRR-8
HD-23-3-6A	C-F-2	C5.51	FLANGE TO PIPE	-	Y	-	-	-	-	PRR-8
HD-23-F13	C-F-2	C5.51	VALVE TO PIPE	-	Y	-	-	-	-	PRR-8
HD-23-3-5B	C-F-2	C5.51	PIPE TO FLANGE	-	Y	-	-	-	-	PRR-8
HD-23-F14	C-F-2	C5.51	PIPE TO VALVE	-	Y	-	-	-	-	PRR-8
HD-23-F15	C-F-2	C5.51	VALVE TO PIPE	-	Y	-	-	-	-	PRR-8, I2P1
HD-23-F16	C-F-2	C5.51	PIPE TO VALVE	-	Y	-	-	-	-	PRR-8
HD-23-F17	C-F-2	C5.51	VALVE TO PIPE	-	Y	-	-	-	-	PRR-8, I2P3
HD-23-F18	C-F-2	C5.51	PIPE TO VALVE	-	Y	-	-	-	-	PRR-8

COMPONENT IDENTIFICATION	ASME CODE CAT	ASME CODE ITEM	DESCRIPTION	ASME CODE EXAM	REL REQ	4TH ISI INTERVAL PER1	PER2	PER3	WELD LTH OR THICK	REMARKS
HPCI										
Drawing Number: ISI-I-23-4										
Line Number: 16-HD-23										
HD-23-F19	C-F-2	C5.51	VALVE TO PIPE	-	Y	-	-	-	-	PRR-8
HD-23-3-7E	C-F-2	C5.51	PIPE TO FLANGE	-	Y	-	-	-	-	PRR-8
H-23-1-4SR	F-A	F1.20-B	RIGID HANGER	-	-	-	2	-	-	I2P1, I3P2
HD-23-19PS	C-C	C3.20	PIPE STANCHION	-	-	-	-	-	-	H-23-1-24
HD-23-24PS	C-C	C3.20	PIPE STANCHION	-	-	-	-	-	-	H-23-1-2SR
H-23-1-26	F-A	F1.20-C	SPRING HANGER	-	-	-	-	-	-	I2P1
HD-23-3-2C	C-F-2	C5.51	PIPE TO PIPE	-	Y	-	-	-	-	PRR-8
H-23-1-3SR	F-A	F1.20-B	LATERAL RESTRAINT	-	-	-	-	-	-	I2P1
H-23-1-2SR	F-A	F1.20-B	LATERAL RESTRAINT	-	-	-	-	-	-	I2P1, HD-23-24PS
H-23-1-25	F-A	F1.20-B	RIGID HANGER	-	-	-	-	-	-	I2P1, HD-23-15PS
H-23-1-24	F-A	F1.20-B	RIGID SUPPORT	-	-	-	-	-	-	I2P1, HD-23-19PS
HD-23-3-3B	C-F-2	C5.51	PIPE TO TEE	-	Y	-	-	-	-	PRR-8
HD-23-3-3D	C-F-2	C5.51	TEE TO PIPE	-	Y	-	-	-	-	PRR-8
HD-23-3-2B	C-F-2	C5.51	PIPE TO PIPE	-	Y	-	-	-	-	PRR-8
Line Number: 16-HE-226										
HE-26-F176	C-F-2	C5.51	PIPE TO ELBOW	-	Y	-	-	-	-	PRR-8, I2P2
HD-23-3-4C	C-F-2	C5.51	ELBOW TO PIPE	-	Y	-	-	-	-	PRR-8
HD-23-F23	C-F-2	C5.51	PIPE TO TEE	-	Y	-	-	-	-	PRR-8, I2P2
HD-23-F24	C-F-2	C5.51	VALVE TO PIPE	-	Y	-	-	-	-	PRR-8

COMPONENT IDENTIFICATION	ASME CODE CAT	ASME CODE ITEM	DESCRIPTION	ASME CODE EXAM	REL REQ	4TH ISI INTERVAL PER1	PER2	PER3	WELD LTH OR THICK	REMARKS
HPCI										
Drawing Number: ISI-I-23-4										
Line Number: 16-HE-226										
HE-26-30-1A-B	C-F-2	C5.51	ELBOW TO PIPE	-	Y	-	-	-	-	PRR-8
HD-23-3-4B	C-F-2	C5.51	PIPE TO ELBOW	-	Y	-	-	-	-	PRR-8
HE-26-30-1A-C	C-F-2	C5.51	PIPE TO ELBOW	-	Y	-	-	-	-	PRR-8
HE-26-F177	C-F-2	C5.51	PIPE TO VALVE	-	Y	-	-	-	-	PRR-8
HE-26-F175	C-F-2	C5.51	VALVE TO PIPE	-	Y	-	-	-	-	PRR-8
HE-26-F332	C-F-2	C5.51	ELBOW TO PIPE	-	Y	-	-	-	-	PRR-8
HE-26-F333	C-F-2	C5.51	PIPE TO ELBOW	-	Y	-	-	-	-	PRR-8, I2P2
HE-26-F334	C-F-2	C5.51	ELBOW TO PIPE	-	Y	-	-	-	-	PRR-8, I2P2
HE-26-30-2A-B	C-F-2	C5.51	ELBOW TO PIPE	-	Y	-	-	-	-	PRR-8
Line Number: 16-HE-26										
H-23-1-27	F-A	F1.20-C	SPRING HANGER	-	-	-	-	-	-	I2P1
H-26-1-135	F-A	F1.20-B	RIGID HANGER	-	-	-	-	-	-	I2P1
HE-26-175HL1(1)	C-C	C3.20	SUPPORT LUGS	-	-	-	2	-	-	I2P2, I3P2, H-26-1-318
H-26-1-318	F-A	F1.20-C	SPRING HANGER	-	-	-	-	3	-	I2P3, I3P3, HE-26-175HL1(1)
HE-26-F336	C-F-2	C5.51	PIPE TO PIPE	-	Y	-	-	-	-	PRR-8
HE-26-F283	C-F-2	C5.51	PIPE TO ELBOW	-	Y	-	-	-	-	PRR-8

COMPONENT IDENTIFICATION	ASME CODE CAT	ASME CODE ITEM	DESCRIPTION	ASME CODE EXAM	REL REQ	4TH ISI INTERVAL PER1	PER2	PER3	WELD LTH OR THICK	REMARKS
HPCI **Drawing Number: ISI-I-23-4** **Line Number: 16-HL-23**										
HL-23-F21	C-F-2	C5.51	PIPE TO ELBOW	-	Y	-	-	-	-	PRR-8
HL-23-22PS2	C-C	C3.20	PIPE STANCHION	-	-	-	-	-	-	H-23-1-22
H-23-1-87SR	F-A	F1.20-B	LATERAL RESTRAINT	-	-	-	-	-	-	I2P1
H-23-1-22	F-A	F1.20-B	RIGID HANGER	-	-	-	-	-	-	I2P1, HL-23-22PS2
H-23-1-21	F-A	F1.20-B	RIGID HANGER	-	-	-	2	-	-	I2P1, I3P2, HL-23-22PS1
HL-23-22PS1	C-C	C3.20	PIPE STANCHION	-	-	-	-	-	-	H-23-1-21
HL-23-F20	C-F-2	C5.51	PIPE TO VALVE	-	Y	-	2	-	-	PRR-8, I2P2, I3P2
HL-23-1-3B	C-F-2	C5.51	ELBOW TO PIPE	-	Y	-	-	-	-	PRR-8, I2P3
HL-23-1-2A	C-F-2	C5.51	FLANGE TO PIPE	-	Y	-	-	-	-	PRR-8, I2P2
HL-23-1-1H	C-F-2	C5.51	ELBOW TO FLANGE	-	Y	-	-	-	-	PRR-8
HL-23-1-1B	C-F-2	C5.51	PIPE TO ELBOW	-	Y	-	-	-	-	PRR-8
HL-23-1-1C	C-F-2	C5.51	ELBOW TO PIPE	-	Y	-	-	-	-	PRR-8
HL-23-F22	C-F-2	C5.51	NOZZLE TO PIPE	-	Y	-	-	3	-	PRR-8, I2P3, I3P3
HL-23-1-1D	C-F-2	C5.51	PIPE TO ELBOW	-	Y	-	-	-	-	PRR-8
H-23-1-1SH	F-A	F1.20-B	ANCHOR	-	-	-	-	-	-	I2P1, HL-23-1SHPS1
HL-23-1SHPS1	**C-C**	**C3.20**	**WELDED ATTACHMENT**	-	-	-	-	-	-	**H-23-1-1SH**
HL-23-1-1G	C-F-2	C5.51	PIPE TO ELBOW	-	Y	-	-	-	-	PRR-8
HL-23-1-1E	C-F-2	C5.51	ELBOW TO PIPE	-	Y	-	-	-	-	PRR-8

COMPONENT IDENTIFICATION	ASME CODE CAT	ASME CODE ITEM	DESCRIPTION	ASME CODE EXAM	REL REQ	4TH ISI INTERVAL PER1	PER2	PER3	WELD LTH OR THICK	REMARKS
HPCI										
Drawing Number: ISI-I-23-4										
Line Number: BETWEEN PUMPS										
23-P205-3	C-F-2	C5.51	ELBOW TO PIPE	-	Y	-	2	-	-	PRR-8, I3P2
23-P205-2	C-F-2	C5.51	PIPE TO ELBOW	-	Y	-	-	-	-	PRR-8
23-P205-4	C-F-2	C5.51	PIPE TO ELBOW	-	Y	-	-	-	-	PRR-8
23-P205-5	C-F-2	C5.51	ELBOW TO PUMP FLANGE	-	Y	-	-	-	-	PRR-8
23-P205-1	C-F-2	C5.51	PUMP FLANGE TO PIPE	-	Y	-	-	-	-	PRR-8

COMPONENT IDENTIFICATION	ASME CODE CAT	ASME CODE ITEM	DESCRIPTION	ASME CODE EXAM	REL REQ	4TH ISI INTERVAL PER1	PER2	PER3	WELD LTH OR THICK	REMARKS
HPCI										
Drawing Number: ISI-I-23-5										
Line Number: N/A										
SLT HPCI-5	C-H	C7.10	PRESSURE BOUNDARY	VT-2	-	1	2	3	-	-
Line Number: 10-DB-23										
DB-23-F118	C-F-2	C5.51	FLANGE TO PIPE	-	Y	-	-	-	-	PRR-8, I2P3
DB-23-2-1H	C-F-2	C5.51	TEE TO PIPE	-	Y	-	-	-	-	PRR-8, I2P2
DB-23-2-1J	C-F-2	C5.51	PIPE TO ELBOW	-	Y	-	-	-	-	PRR-8
DB-23-118PS	C-C	C3.20	PIPE STANCHION	-	-	-	-	-	-	H-23-1-30
DB-23-2-2A-B	C-F-2	C5.51	PIPE TO ELBOW	-	Y	-	-	-	-	PRR-8
DB-23-2-2A-D	C-F-2	C5.51	PIPE TO ELBOW	-	Y	-	-	-	-	PRR-8
DB-23-2-2A-C	C-F-2	C5.51	ELBOW TO PIPE	-	Y	-	-	-	-	PRR-8
DB-23-F85	C-F-2	C5.51	PIPE TO PIPE	-	Y	-	-	-	-	PRR-8
DB-23-VBW10-1	C-G	C6.20	VALVE BODY WELD	-	-	-	2	-	-	I2P3I, I3P3
DB-23-VBW10-2	C-G	C6.20	VALVE BODY WELD	-	-	-	2	-	-	I2P3, I3P3
DB-23-2-2A-F	C-F-2	C5.51	PIPE TO FLANGE	-	Y	-	-	-	-	PRR-8

COMPONENT IDENTIFICATION	ASME CODE CAT	ASME CODE ITEM	DESCRIPTION	ASME CODE EXAM	REL REQ	4TH ISI INTERVAL PER1	PER2	PER3	WELD LTH OR THICK	REMARKS
HPCI										
Drawing Number: ISI-I-23-5										
Line Number: 10-DB-23										
DB-23-2-3A	C-F-2	C5.51	FLANGE TO ELBOW	-	Y	-	-	-	-	PRR-8
DB-23-2-3B	C-F-2	C5.51	ELBOW TO PIPE	-	Y	-	-	-	-	PRR-8
DB-23-F44	C-F-2	C5.51	PIPE TO VALVE	-	Y	-	-	-	-	PRR-8, I2P3
DB-23-F43	C-F-2	C5.51	ELBOW TO PIPE	-	Y	-	-	-	-	PRR-8
H-23-1-30	F-A	F1.20-B	RIGID HANGER	-	-	-	2	-	-	I2P1, I3P2, DB-23-118PS
H-23-1-28	F-A	F1.20-B	RIGID HANGER	-	-	-	-	-	-	I2P1
H-23-1-27S	F-A	F1.20-B	RIGID HANGER	-	-	-	-	-	-	I2P1
DB-23-2-2E	N/A	N/A	ELBOW TO PIPE	-	Y	-	-	-	-	PRR-8
H-23-1-26S	F-A	F1.20-B	GUIDE	-	-	-	-	-	-	I2P1, DB-23-85HL1(4)
DB-23-85HL1(4)	C-C	C3.20	SUPPORT LUGS	-	-	-	-	-	-	H-23-1-26S
DB-23-F119	C-F-2	C5.51	ELBOW TO FLANGE	-	Y	-	-	-	-	PRR-8
Line Number: 14-DB-23										
DB-23-F50	C-F-2	C5.51	ELBOW TO PIPE	-	Y	-	-	-	-	PRR-8
DB-23-2-1E	C-F-2	C5.51	TEE TO PIPE	-	Y	-	-	-	-	PRR-8
DB-23-F51	C-F-2	C5.51	ELBOW TO PIPE	-	Y	-	-	-	-	PRR-8
DB-23-F52	C-F-2	C5.51	ELBOW TO PIPE	-	Y	-	-	-	-	PRR-8
DB-23-1-1B	C-F-2	C5.51	PIPE TO ELBOW	-	Y	-	-	-	-	PRR-8
DB-23-F53	C-F-2	C5.51	ELBOW TO PIPE	-	Y	-	2	-	-	PRR-8, I2P2, I3P2
DB-23-F4	C-F-2	C5.51	PIPE TO VALVE	-	Y	-	-	-	-	PRR-8, I2P3

COMPONENT IDENTIFICATION	ASME CODE CAT	ASME CODE ITEM	DESCRIPTION	ASME CODE EXAM	REL REQ	4TH ISI INTERVAL PER1	PER2	PER3	WELD LTH OR THICK	REMARKS
HPCI Drawing Number: ISI-I-23-5 Line Number: 14-DB-23										
DB-23-F42	C-F-2	C5.51	VALVE TO PIPE	-	Y	-	-	-	-	PRR-8, I2P3
DB-23-2-1F	C-F-2	C5.51	PIPE TO ELBOW	-	Y	-	-	-	-	PRR-8
DB-23-F77	C-F-2	C5.51	PIPE TO PIPE	-	Y	-	-	-	-	PRR-8
H-23-1-10SA	F-A	F1.20-B	ANCHOR	-	-	-	-	-	-	I2P1
DB-23-53PL	N/A	N/A	PLATE	-	-	-	-	-	-	-
DB-23-53HL1(4)	N/A	N/A	SUPPORT LUGS	-	-	-	-	-	-	-
H-23-1-4	F-A	F1.20-C	SPRING HANGER	-	-	-	-	-	-	I2P1
DB-23-42PS	C-C	C3.20	PIPE STANCHION	-	-	-	-	-	-	H-23-1-23SA
DB-23-51HL1(4)	C-C	C3.20	SUPPORT LUGS	-	-	-	-	3	-	I2P3, I3P3, H-23-1-3
DB-23-53PS(2)	C-C	C3.20	PIPE STANCHION	-	-	-	-	-	-	H-23-1-10SA
H-23-1-2	F-A	F1.20-C	SPRING HANGER	-	-	-	-	-	-	I2P1
H-23-1-1	F-A	F1.20-C	SPRING HANGER	-	-	-	-	-	-	I2P1
H-23-1-23SA	F-A	F1.20-B	ANCHOR	-	-	-	-	-	-	I2P1, DB-23-42PS
DB-23-1-1D	C-F-2	C5.51	PIPE TO ELBOW	-	Y	-	-	-	-	PRR-8
DB-23-2-1D	C-F-2	C5.51	PIPE TO TEE	-	Y	-	-	-	-	PRR-8
H-23-1-3	F-A	F1.20-A	RIGID HANGER	-	-	-	-	3	-	I2P1, I3P3, DB-23-51HL1(4)
DB-23-1-1C	C-F-2	C5.51	ELBOW TO PIPE	-	Y	-	-	-	-	PRR-8
DB-23-1-2B	C-F-2	C5.51	ELBOW TO PIPE	-	Y	-	-	-	-	PRR-8
DB-23-1-2C	C-F-2	C5.51	PIPE TO ELBOW	-	Y	-	-	-	-	PRR-8

COMPONENT IDENTIFICATION	ASME CODE CAT	ASME CODE ITEM	DESCRIPTION	ASME CODE EXAM	REL REQ	4TH ISI INTERVAL PER1	PER2	PER3	WELD LTH OR THICK	REMARKS
HPCI										
Drawing Number: ISI-I-23-5										
Line Number: 14-DB-23										
DB-23-1-3B	C-F-2	C5.51	PIPE TO ELBOW	-	Y	-	-	-	-	PRR-8
DB-23-2-1B	C-F-2	C5.51	PIPE TO ELBOW	-	Y	-	-	-	-	PRR-8, I2P2
DB-23-2-1C	C-F-2	C5.51	ELBOW TO PIPE	-	Y	-	-	-	-	PRR-8, I2P2
Line Number: 14-EB-23										
EB-23-40PS	C-C	C3.20	PIPE STANCHION	-	-	-	-	-	-	H-23-1-22S
EB-23-3-1G	C-F-2	C5.51	PIPE TO WELDOLET	-	Y	-	-	-	-	PRR-8
EB-23-37PS	C-C	C3.20	PIPE STANCHION	-	-	-	-	-	-	H-23-1-21SA
EB-23-F36	C-F-2	C5.51	ELBOW TO PIPE	-	Y	-	-	-	-	PRR-8, I2P1
H-23-1-35	F-A	F1.20-C	SPRING HANGER	-	-	-	-	-	-	I2P1
H-23-1-33	F-A	F1.20-C	SPRING HANGER	-	-	-	2	-	-	I2P1, I3P2
H-23-1-32	F-A	F1.20-C	SPRING HANGER	-	-	-	-	-	-	I2P1
H-23-1-22S	F-A	F1.20-B	RIGID SUPPORT	-	-	-	-	-	-	I2P1, EB-23-40PS
H-23-1-21SA	F-A	F1.20-B	ANCHOR	-	-	-	2	-	-	I2P1, I3P2, EB-23-37PS
EB-23-F41	C-F-2	C5.51	ELBOW TO VALVE	-	Y	-	-	-	-	PRR-8
EB-23-F40	C-F-2	C5.51	ELBOW TO PIPE	-	Y	-	-	-	-	PRR-8
EB-23-F39	C-F-2	C5.51	FLANGE TO PIPE	-	Y	-	-	-	-	PRR-8
EB-23-3-1D	C-F-2	C5.51	ELBOW TO PIPE	-	Y	-	-	-	-	PRR-8
EB-23-F37	C-F-2	C5.51	ELBOW TO PIPE	-	Y	-	-	-	-	PRR-8, I2P1
EB-23-3-1B	C-F-2	C5.51	RED. ELBOW TO PIPE	-	Y	1	-	-	-	PRR-8, I2P1, I3P1

COMPONENT IDENTIFICATION	ASME CODE CAT	ASME CODE ITEM	DESCRIPTION	ASME CODE EXAM	REL REQ	4TH ISI INTERVAL PER1	PER2	PER3	WELD LTH OR THICK	REMARKS
HPCI Drawing Number: ISI-I-23-5 Line Number: 14-EB-23										
EB-23-F35	C-F-2	C5.51	PUMP TO RED. ELBOW	-	Y	1	-	-	-	PRR-8, I2P1, I3P1
EB-23-3-7B	C-F-2	C5.51	PIPE TO ELBOW	-	Y	-	-	-	-	PRR-8
EB-23-3-6D	C-F-2	C5.51	PIPE TO ELBOW	-	Y	-	-	-	-	PRR-8
EB-23-3-6C	C-F-2	C5.51	ELBOW TO PIPE	-	Y	-	-	-	-	PRR-8
EB-23-3-6B	C-F-2	C5.51	PIPE TO ELBOW	-	Y	-	-	-	-	PRR-8
EB-23-3-4B	C-F-2	C5.51	PIPE TO ELBOW	-	Y	-	-	-	-	PRR-8
EB-23-37HL1(4)	N/A	N/A	SUPPORT LUGS	-	-	-	-	-	-	-
EB-23-3-1E	C-F-2	C5.51	PIPE TO ELBOW	-	Y	-	-	-	-	PRR-8
EB-23-3-1C	C-F-2	C5.51	PIPE TO ELBOW	-	Y	-	-	-	-	PRR-8
EB-23-F38	C-F-2	C5.51	PIPE TO FLANGE	-	Y	-	-	-	-	PRR-8, I2P1

COMPONENT IDENTIFICATION	ASME CODE CAT	ASME CODE ITEM	DESCRIPTION	ASME CODE EXAM	REL REQ	4TH ISI INTERVAL PER1	PER2	PER3	WELD LTH OR THICK	REMARKS
HPCI **Drawing Number: M227SH1** **Line Number: 4-HCB-45**										
SLT HPCI-X219	C-H	C7.10	HPCI EXHAUST VACUUM BREAKER AND RECOMBINER VENT	VT-2	-	1	2	3	-	--

COMPONENT IDENTIFICATION	ASME CODE CAT	ASME CODE ITEM	DESCRIPTION	ASME CODE EXAM	REL REQ	4TH ISI INTERVAL PER1	PER2	PER3	WELD LTH OR THICK	REMARKS
HPCI Drawing Number: N/A Number: N/A										
SLT HPCI-1	C-H	C7.10	PRESSURE BOUNDARY	VT-2	-	1	2	3	-	-
SLT HPCI-2	C-H	C7.10	PRESSURE BOUNDARY	VT-2	-	1	2	3	-	-

COMPONENT IDENTIFICATION	ASME CODE CAT	ASME CODE ITEM	DESCRIPTION	ASME CODE EXAM	REL REQ	4TH ISI INTERVAL PER1	PER2	PER3	WELD LTH OR THICK	REMARKS
INST AIR **Drawing Number: N/A** **Line Number: N/A**										
SLT AIR-1	C-H	C7.10	PRESSURE BOUNDARY	VT-2	Y	1	2	3	-	-

COMPONENT IDENTIFICATION	ASME CODE CAT	ASME CODE ITEM	DESCRIPTION	ASME CODE EXAM	REL REQ	4TH ISI INTERVAL PER1	PER2	PER3	FAC PROG. EXAM. CREDIT	REMARKS
Main Steam **Drawing Number: ISI-I-1-1SH1** **Line Number: 12-GE-1**										
1-GE-X208A-HL	D-A	D1.20	INTEGRAL ATTACHMENT	-	-	-	-	-	-	-
1-GE-X208B-HL	D-A	D1.20	INTEGRAL ATTACHMENT	-	-	-	-	-	-	-
1-GE-X208C-HL	D-A	D1.20	INTEGRAL ATTACHMENT	-	-	-	-	-	-	-
1-GE-X208D-HL	D-A	D1.20	INTEGRAL ATTACHMENT	-	-	-	-	-	-	-
SLT MS-2	D-B	D2.10	SRV DISCHARGE INSIDE TORUS	VT-2	-	1	2	3	-	PIL-05-R-003

COMPONENT IDENTIFICATION	ASME CODE CAT	ASME CODE ITEM	DESCRIPTION	ASME CODE EXAM	REL REQ	4TH ISI INTERVAL PER1	PER2	PER3	FAC PROG. EXAM. CREDIT	REMARKS
Main Steam **Drawing Number: ISI-I-1-1SH2** **Line Number: 2-EB-1**										
1-A-16T	R-A	R1.20	VALVE TO PIPE	-	Y	1	-	-	-	RI-ISI; (B-J, B9.32); PRR-10
1-B-16T	R-A	R1.20	VALVE TO PIPE	-	Y	-	-	-	-	(B-J/B9.32) PRR-10
1-C-16T	R-A	R1.20	VALVE TO PIPE	-	Y	-	-	-	-	(B-J/B9.32) PRR-10
1-D-16T	R-A	R1.20	VALVE TO PIPE	-	Y	-	-	-	-	(B-J/B9.32) PRR-10

COMPONENT IDENTIFICATION	ASME CODE CAT	ASME CODE ITEM	DESCRIPTION	ASME CODE EXAM	REL REQ	4TH ISI INTERVAL PER1	PER2	PER3	FAC PROG. EXAM. CREDIT	REMARKS
Main Steam Drawing Number: ISI-I-1-1SH1 Line Number: 20-EB-1										
1-A-10	R-A	R1.20	ELBOW TO PIPE	-	Y	-	-	-	-	(B-J/ B9.11) PRR-10
1-B-8	R-A	R1.20	ELBOW TO PIPE	-	Y	-	-	-	-	(B-J/ B9.11) PRR-10, I2P2
1-B-9	R-A	R1.20	PIPE TO ELBOW	-	Y	-	-	-	-	(B-J/ B9.11) PRR-10, I2P2
1-C-2	R-A	R1.20	SAFE END TO PIPE	-	Y	-	-	-	-	(B-J/ B9.11) PRR-10
1-C-3	R-A	R1.20	PIPE TO ELBOW	-	Y	-	-	-	-	(B-J/ B9.11) PRR-10
1-C-4	R-A	R1.20	ELBOW TO PIPE	-	Y	-	-	-	-	(B-J/ B9.11) PRR-10
1-C-5	R-A	R1.20	PIPE TO PIPE	-	Y	-	-	-	-	(B-J/ B9.11) PRR-10
1-C-6	R-A	R1.20	PIPE TO ELBOW	-	Y	-	-	-	-	(B-J/ B9.11) PRR-10
1-C-11	R-A	R1.20	PIPE TO ELBOW	-	Y	-	-	-	-	(B-J/ B9.11) PRR-10
1-C-12	R-A	R1.20	ELBOW TO PIPE	-	Y	-	-	-	-	(B-J/ B9.11) PRR-10
1-C-8	R-A	R1.20	ELBOW TO PIPE	-	Y	-	-	-	-	(B-J/ B9.11) PRR-10, I2P3
1-C-9	R-A	R1.20	PIPE TO ELBOW-	-	Y	-	-	-	-	(B-J/ B9.11) PRR-10, I2P3
1-D-2	R-A	R1.20	SAFE END TO PIPE	-	Y	-	-	-	-	(B-J/ B9.11) PRR-10
1-D-3	R-A	R1.20	PIPE TO ELBOW	-	Y	-	-	-	-	(B-J/ B9.11) PRR-10
1-D-10	R-A	R1.20	ELBOW TO PIPE	-	Y	-	-	-	-	(B-J/ B9.11) PRR-10
1-D-11	R-A	R1.20	PIPE TO ELBOW	-	Y	-	-	-	-	(B-J/ B9.11) PRR-10
1-D-12	R-A	R1.20	ELBOW TO PIPE	-	Y	-	-	-	-	(B-J/ B9.11) PRR-10

COMPONENT IDENTIFICATION	ASME CODE CAT	ASME CODE ITEM	DESCRIPTION	ASME CODE EXAM	REL REQ	4TH ISI INTERVAL PER1	PER2	PER3	FAC PROG. EXAM. CREDIT	REMARKS
Main Steam										
Drawing Number: ISI-I-1-1SH1										
Line Number: 20-EB-1										
1-A-2	R-A	R1.20	SAFE END TO PIPE	-	Y	-	-	-	-	(B-J/ B9.11) PRR-10
1-A-3	R-A	R1.20	PIPE TO ELBOW	-	Y	-	-	-	-	(B-J/ B9.11) PRR-10
1-A-4	R-A	R1.20	ELBOW TO PIPE	-	Y	-	-	-	-	(B-J/ B9.11) PRR-10
1-A-5	R-A	R1.20	PIPE TO PIPE	-	Y	-	-	-	-	(B-J/ B9.11) PRR-10
1-A-6	R-A	R1.20	PIPE TO ELBOW	-	Y	-	-	-	-	(B-J/ B9.11) PRR-10
1-A-7	R-A	R1.20	ELBOW TO ELBOW	-	Y	1	-	-	-	RI-ISI; (B-J, B9.11); PPR-10, I2P1, I3P1
1-A-9	R-A	R1.20	PIPE TO ELBOW	-	Y	-	-	-	-	(B-J/ B9.11) PRR-10, I2P1, I3P1
1-A-11	R-A	R1.20	PIPE TO ELBOW	-	Y	1	-	-	Y	RI-ISI; (B-J, B9.11); PRR-10
1-A-12	R-A	R1.20	ELBOW TO PIPE	-	Y	1	-	-	Y	RI-ISI; (B-J, B9.11); PRR-10
1-C-7	R-A	R1.20	ELBOW TO ELBOW	-	Y	-	-	-	-	(B-J/ B9.11) PRR-10
1-C-10	R-A	R1.20	ELBOW TO PIPE	-	Y	-	-	-	-	(B-J/ B9.11) PRR-10
1-B-10	R-A	R1.20	ELBOW TO PIPE	-	Y	-	-	-	-	(B-J/ B9.11) PRR-10, I2P1
1-B-11	R-A	R1.20	PIPE TO ELBOW	-	Y	-	-	-	-	(B-J/ B9.11) PRR-10
1-D-4	R-A	R1.20	ELBOW TO PIPE	-	Y	-	-	-	-	(B-J/ B9.11) PRR-10
1-D-5	R-A	R1.20	PIPE TO PIPE	-	Y	-	-	-	-	(B-J/ B9.11) PRR-10
1-D-6	R-A	R1.20	PIPE TO ELBOW	-	Y	-	-	-	-	(B-J/ B9.11) PRR-10
1-D-9	R-A	R1.20	PIPE TO ELBOW	-	Y	-	-	-	-	(B-J/ B9.11) PRR-10, I2P2
1-B-12	R-A	R1.20	ELBOW TO PIPE	-	Y	-	-	-	-	(B-J/ B9.11) PRR-10

COMPONENT IDENTIFICATION	ASME CODE CAT	ASME CODE ITEM	DESCRIPTION	ASME CODE EXAM	REL REQ	4TH ISI INTERVAL PER1	PER2	PER3	FAC PROG. EXAM. CREDIT	REMARKS
Main Steam Drawing Number: ISI-I-1-1SH1 Line Number: 20-EB-1										
1-A-8	R-A	R1.20	ELBOW TO PIPE	-	Y	1	-	-	-	RI-ISI; (B-J, B9.11); PPR-10, I2P1, I3P1
1-B-2	R-A	R1.20	SAFE END TO PIPE	-	Y	-	-	-	-	(B-J/ B9.11) PRR-10
1-B-3	R-A	R1.20	PIPE TO ELBOW	-	Y	-	-	-	-	(B-J/ B9.11) PRR-10
1-B-4	R-A	R1.20	ELBOW TO PIPE	-	Y	-	-	-	-	(B-J/ B9.11) PRR-10
1-B-5	R-A	R1.20	PIPE TO PIPE	-	Y	-	-	-	-	(B-J/ B9.11) PRR-10
1-B-6	R-A	R1.20	PIPE TO ELBOW	-	Y	-	-	-	-	(B-J/ B9.11) PRR-10
1-B-7	R-A	R1.20	ELBOW TO ELBOW	-	Y	-	-	-	-	(B-J/ B9.11) PRR-10
H-1-1-SB1	N/A	N/A	SNUBBER	-	-	-	-	-	-	I2P1
H-1-1-HB3	F-A	F1.10-C	SPRING HANGER	-	-	-	-	-	-	I2P2, 1-B-10HL1(4)
H-1-1-HC1	F-A	F1.10-C	SPRING HANGER	-	-	-	-	-	-	I2P1, 1-C-10HL1(4)
H-1-1-HC2	F-A	F1.10-C	SPRING HANGER	-	-	-	-	-	-	I2P1, 1-C-8HL1(8)
H-1-1-HC3	F-A	F1.10-C	SPRING HANGER	-	-	-	-	-	-	I2P1, 1-C-10HL1(4)
H-1-1-HD1	F-A	F1.10-C	SPRING HANGER	-	-	-	-	-	-	I2P1, 1-D-10HL1(4)
H-1-1-HD2	F-A	F1.10-C	SPRING HANGER	-	-	-	-	-	-	I2P1, 1-D-8HL1(8)
H-1-1-HD3	F-A	F1.10-C	SPRING HANGER	-	-	-	-	-	-	I2P1
H-1-1-HD4	F-A	F1.10-C	SPRING HANGER	-	-	-	-	3	-	I2P1, I3P3, 1-D-10HL1(4)
H-1-1-SA1	N/A	N/A	SNUBBER	-	-	1	-	-	-	I2P1, I3P1
1-D-7	R-A	R1.20	ELBOW TO PIPE	-	Y	-	-	-	-	(B-J/ B9.11) PRR-10, I2P2

COMPONENT IDENTIFICATION	ASME CODE CAT	ASME CODE ITEM	DESCRIPTION	ASME CODE EXAM	REL REQ	4TH ISI INTERVAL PER1	PER2	PER3	FAC PROG. EXAM. CREDIT	REMARKS
Main Steam Drawing Number: ISI-I-1-1SH1 Line Number: 20-EB-1										
H-1-1-SA3	N/A	N/A	SNUBBER	-	-	-	-	-	-	I2P1,
H-1-1-HA4	F-A	F1.10-C	SPRING HANGER	-	-	-	-	3	-	I2P1, I3P3, 1-A-10HL1(4)
H-1-1-SB2	N/A	N/A	SNUBBER	-	-	-	-	-	-	I2P1
H-1-1-SB3	N/A	N/A	SNUBBER	-	-	-	-	-	-	I2P1
H-1-1-SC1	N/A	N/A	SNUBBER	-	-	-	-	-	-	I2P2
H-1-1-SC2	N/A	N/A	SNUBBER	-	-	-	-	-	-	I2P2
H-1-1-SC3	N/A	N/A	SNUBBER	-	-	-	-	-	-	I2P2
H-1-1-SD1	N/A	N/A	SNUBBER	-	-	-	-	-	-	I2P1
H-1-1-SD3	N/A	N/A	SNUBBER	-	-	-	-	-	-	I2P1
1-B-8HL1(8)	B-K	B10.20	SUPPORT LUG	-	-	-	-	-	-	-
H-1-1-SA2	N/A	N/A	SNUBBER	-	-	1	-	-	-	I2P1, I3P1
1-B-4HL1(4)	B-K	B10.20	SUPPORT LUG	-	-	-	-	-	-	I2P1
1-B-8HL2(8)	B-K	B10.20	SUPPORT LUG	-	-	-	-	-	-	I2P3
1-AR-1	R-A	R1.20	PIPE TO WELDOLET	-	Y	-	-	-	-	(B-J/ B9.31) PRR-10, I2P2
1-AS-1	R-A	R1.20	PIPE TO WELDOLET	-	Y	-	-	-	-	(B-J/ B9.31) PRR-10
1-BR-1	R-A	R1.20	PIPE TO WELDOLET	-	Y	-	-	-	-	(B-J/ B9.31) PRR-10, I2P1, I3P1
1-CS-1	R-A	R1.20	PIPE TO WELDOLET	-	Y	-	-	-	-	(B-J/ B9.31) PRR-10
1-DR1-1	R-A	R1.20	PIPE TO WELDOLET	-	Y	-	-	-	-	(B-J/ B9.31) PRR-10, I2P3

COMPONENT IDENTIFICATION	ASME CODE CAT	ASME CODE ITEM	DESCRIPTION	ASME CODE EXAM	REL REQ	4TH ISI INTERVAL PER1	PER2	PER3	FAC PROG. EXAM. CREDIT	REMARKS
Main Steam										
Drawing Number: ISI-I-1-1SH1										
Line Number: 20-EB-1										
1-DR2-1	R-A	R1.20	PIPE TO WELDOLET	-	Y	-	-	-	-	(B-J/ B9.31) PRR-10
1-A-10HL1(4)	B-K	B10.20	HANGER LUGS	-	-	-	-	-	-	I2P2, H-1-1-HA4
1-A-4HL1(4)	B-K	B10.20	SUPPORT LUG	-	-	-	-	-	-	I2P2
H-1-1-HB2	F-A	F1.10-C	SPRING HANGER	-	-	-	-	-	-	I2P1
1-B-10HL1(4)	B-K	B10.20	SUPPORT LUG	-	-	-	-	-	-	I2P2, H-1-1-HB3
H-1-1-HB1	F-A	F1.10-C	SPRING HANGER	-	-	-	-	-	-	I2P1, 1-B-4HL1(4)
1-C-10HL1(4)	B-K	B10.20	SUPPORT LUG	-	-	-	-	-	-	I2P2, H-1-1-HC1
1-C-4HL1(4)	B-K	B10.20	SUPPORT LUG	-	-	-	-	-	-	I2P3
1-C-8HL1(8)	B-K	B10.20	SUPPORT LUG	-	-	-	-	-	-	I2P1, H-1-1-HC2
1-D-10HL1(4)	B-K	B10.20	SUPPORT LUG	-	-	-	-	-	-	I2P2, H-1-1-HD1
1-D-4HL1(4)	B-K	B10.20	SUPPORT LUG	-	-	-	-	-	-	I2P3
1-D-8HL1(8)	B-K	B10.20	SUPPORT LUG	-	-	-	-	-	-	I2P1, H-1-1-HD2
H-1-1-HA1	F-A	F1.10-C	SPRING HANGER	-	-	-	2	-	-	I2P2, I3P2, 1-A-4HL1(4)
H-1-1-HA2	F-A	F1.10-C	SPRING HANGER	-	-	1	-	-	-	I2P1, I3P1, 1-A-8HL1(8)
H-1-1-HA3	F-A	F1.10-C	SPRING HANGER	-	-	-	2	-	-	I2P1, I3P2
1-D-8	R-A	R1.20	PIPE TO PIPE	-	Y	-	-	-	-	(B-J/ B9.11); PRR-10, I2P2
1-A-8HL1(8)	B-K	B10.20	SUPPORT LUGS	-	-	1	-	-	-	I2P1, I3P1, H-1-1HA3

COMPONENT IDENTIFICATION	ASME CODE CAT	ASME CODE ITEM	DESCRIPTION	ASME CODE EXAM	REL REQ	4TH ISI INTERVAL PER1	PER2	PER3	FAC PROG. EXAM. CREDIT	REMARKS
Main Steam **Drawing Number: ISI-I-1-1SH1** **Line Number: 6-EB-1**										
1-VB-203-3A	B-G-2	B7.70	VALVE BOLTING <2'	-	Y	-	2	-	-	PRR-14, I2P1, I3P2
1-VB-203-3B	B-G-2	B7.70	VALVE BOLTING <2'	-	Y	-	2	-	-	PRR-14, I2P1, I3P2
1-VB-203-3C	B-G-2	B7.70	VALVE BOLTING <2'	-	Y	-	2	-	-	PRR-14, I2P1, I3P2
1-VB-203-3D	B-G-2	B7.70	VALVE BOLTING <2'	-	Y	-	2	-	-	PRR-14, I2P1, I3P2
1-VB-203-4A	B-G-2	B7.70	VALVE BOLTING <2'	-	Y	-	2	-	-	PRR-14, I2P1, I3P2
1-VB-203-4B	B-G-2	B7.70	VALVE BOLTING <2'	-	Y	-	2	-	-	PRR-14, I2P1, I3P2
1-AR-2	R-A	R1.20	WELD TO PIPE	-	Y	-	-	-	-	(B-J/B9.11) PRR-10, I2P2
1-AR-3	R-A	R1.20	PIPE TO FLANGE	-	Y	-	-	-	-	(B-J/B9.11) PRR-10, I2P2
1-AS-2	R-A	R1.20	WELDOLET TO PIPE	-	Y	-	-	-	-	(B-J/B9.11) PRR-10
1-AS-3	R-A	R1.20	PIPE TO FLANGE	-	Y	-	-	-	-	(B-J/B9.11) PRR-10
1-BR-2	R-A	R1.20	WELDOLET TO PIPE	-	Y	-	-	-	-	(B-J/B9.11) PRR-10
1-BR-3	R-A	R1.20	PIPE TO FLANGE	-	Y	-	-	-	-	(B-J/B9.11) PRR-10
1-CS-2	R-A	R1.20	WELDOLET TO PIPE	-	Y	-	-	-	-	(B-J/B9.11) PRR-10
1-CS-3	R-A	R1.20	PIPE TO FLANGE	-	Y	-	-	-	-	(B-J/B9.11) PRR-10
1-DR1-2	R-A	R1.20	WELDOLET TO PIPE	-	Y	-	-	-	-	(B-J/B9.11) PRR-10, I2P2
1-DR1-3	R-A	R1.20	PIPE TO FLANGE	-	Y	-	-	-	-	(B-J/B9.11) PRR-10, I2P2
1-DR2-2	R-A	R1.20	WELDOLET TO PIPE	-	Y	-	-	-	-	(B-J/B9.11) PRR-10
1-DR2-3	R-A	R1.20	PIPE TO FLANGE	-	Y	-	-	-	-	(B-J/B9.11) PRR-10
1-VI-203-3A	B-M-2	B12.50	VALVE INTERNALS	-	-	-	-	-	-	-

COMPONENT IDENTIFICATION	ASME CODE CAT	ASME CODE ITEM	DESCRIPTION	ASME CODE EXAM	REL REQ	4TH ISI INTERVAL PER1	PER2	PER3	FAC PROG. EXAM. CREDIT	REMARKS
Main Steam Drawing Number: ISI-I-1-1SH1 Line Number: 6-EB-1										
1-VI-203-3B	B-M-2	B12.50	VALVE INTERNALS	-	-	-	-	-	-	-
1-VI-203-3C	B-M-2	B12.50	VALVE INTERNALS	-	-	-	-	-	-	-
1-VI-203-3D	B-M-2	B12.50	VALVE INTERNALS	-	-	-	-	-	-	-
1-VI-203-4A	B-M-2	B12.50	VALVE INTERNALS	-	-	-	-	-	-	-
1-VI-203-4B	B-M-2	B12.50	VALVE INTERNALS	-	-	-	-	-	-	-

COMPONENT IDENTIFICATION	ASME CODE CAT	ASME CODE ITEM	DESCRIPTION	ASME CODE EXAM	REL REQ	4TH ISI INTERVAL PER1	PER2	PER3	FAC PROG. EXAM. CREDIT	REMARKS
Main Steam Drawing Number: ISI-I-1-1SH2 Line Number: 20-EB-1										
1-A-13	R-A	R1.20	PIPE TO VALVE	-	Y	-	-	-	-	(B-J/B9.11) PRR-10
1-A-14	R-A	R1.20	VALVE TO PIPE	-	Y	-	-	-	-	(B-J/B9.11) PRR-10, I2P1, I3P1
1-A-14A	R-A	R1.20	PIPE TO FLUED HEAD	-	Y	-	-	-	-	(B-J/B9.11) PRR-10
1-A-15	R-A	R1.20	FLUED HEAD TO PIPE	-	Y	1	-	-	-	RI-ISI; (B-J, B9.11); PRR-10; I2P1, I3P1
1-A-16	R-A	R1.20	PIPE TO VALVE	-	Y	-	-	-	-	(B-J/B9.11) PRR-10
1-B-13	R-A	R1.20	PIPE TO VALVE	-	Y	-	-	-	-	(B-J/B9.11) PRR-10
1-B-14	R-A	R1.20	VALVE TO PIPE	-	Y	-	-	-	-	(B-J/B9.11) PRR-10, I2P2
1-B-14A	R-A	R1.20	PIPE TO FLUED HEAD	-	Y	-	-	-	-	(B-J/B9.11) PRR-10
1-B-15	R-A	R1.20	FLUED HEAD TO PIPE	-	Y	-	2	-	-	RI-ISI; (B-J, B9.11); PRR-10; I2P2, I3P2
1-C-13	R-A	R1.20	PIPE TO VALVE	-	Y	-	-	-	-	(B-J/B9.11) PRR-10
1-C-14	R-A	R1.20	VALVE TO PIPE	-	Y	-	-	-	-	(B-J/B9.11) PRR-10, I2P3
1-C-14A	R-A	R1.20	PIPE TO FLUED HEAD	-	Y	-	-	-	-	(B-J/B9.11) PRR-10
1-C-15	R-A	R1.20	FLUED HEAD TO PIPE	-	Y	-	-	3	-	RI-ISI; (B-J, B9.11); PRR-10; I2P3, I3P3
1-C-16	R-A	R1.20	PIPE TO VALVE	-	Y	-	-	-	-	(B-J/B9.11) PRR-10
1-D-13	R-A	R1.20	PIPE TO VALVE	-	Y	-	-	-	-	(B-J/B9.11) PRR-10
1-D-14	R-A	R1.20	VALVE TO PIPE	-	Y	-	-	-	-	(B-J/B9.11) PRR-10, I2P3
1-D-14A	R-A	R1.20	PIPE TO FLUED HEAD	-	Y	-	-	-	-	(B-J/B9.11) PRR-10
1-D-15	R-A	R1.20	FLUED HEAD TO PIPE	-	Y	-	-	3	-	RI-ISI; (B-J, B9.11); PRR-10; I2P3, I3P3
1-D-16	R-A	R1.20	PIPE TO VALVE	-	Y	-	-	-	-	(B-J/B9.11) PRR-10

COMPONENT IDENTIFICATION	ASME CODE CAT	ASME CODE ITEM	DESCRIPTION	ASME CODE EXAM	REL REQ	4TH ISI INTERVAL PER1	PER2	PER3	FAC PROG. EXAM. CREDIT	REMARKS
Main Steam Drawing Number: ISI-I-1-1SH2 Line Number: 20-EB-1										
1-B-16	R-A	R1.20	PIPE TO VALVE	-	Y	-	-	-	-	(B-J/B9.11) PRR-10
H-1-1-X7D	F-A	F1.10-B	ANCHOR	-	-	-	-	-	-	I2P1
H-1-1-44	F-A	F1.20-A	RIGID HANGER	-	-	-	-	-	-	I2P1
H-1-1-36	F-A	F1.20-A	RIGID HANGER	-	-	-	-	-	-	I2P2
H-1-1-29	F-A	F1.20-A	RIGID HANGER	-	-	-	-	-	-	I2P2
H-1-1-X7A	F-A	F1.10-B	ANCHOR	-	-	-	2	-	-	I2P1, I3P2
H-1-1-X7B	F-A	F1.10-B	ANCHOR	-	-	-	-	-	-	I2P2
H-1-1-X7C	F-A	F1.10-B	ANCHOR	-	-	-	-	-	-	I2P2
H-1-1-22	F-A	F1.20-A	RIGID HANGER	-	-	1	-	-	-	I2P1, I3P1
1-VB-203-1B	B-G-2	B7.70	VALVE BOLTING <2"	-	Y	1	-	-	-	PRR-14, I2P1, I3P1
1-VB-203-2D	B-G-2	B7.70	VALVE BOLTING <2"	-	Y	-	2	-	-	PRR-14, I2P1, I3P2
1-VB-203-2C	B-G-2	B7.70	VALVE BOLTING <2"	-	Y	-	2	-	-	PRR-14, I2P1, I3P2
1-VB-203-2B	B-G-2	B7.70	VALVE BOLTING <2"	-	Y	1	-	-	-	PRR-14, I2P1, I3P1
1-VB-203-2A	B-G-2	B7.70	VALVE BOLTING <2"	-	Y	1	-	-	-	PRR-14, I2P1, I3P1
1-VB-203-1C	B-G-2	B7.70	VALVE BOLTING <2"	-	Y	1	-	-	-	PRR-14, I2P1, I3P1
1-VI-203-2A	B-M-2	B12.50	VALVE INTERNALS	-	-	-	-	-	-	
1-VB-203-1D	B-G-2	B7.70	VALVE BOLTING <2"	-	Y	1	-	-	-	PRR-14, I2P1, I3P1
1-VI-203-2D	B-M-2	B12.50	VALVE INTERNALS	-	-	-	-	-	-	
1-VB-203-1A	B-G-2	B7.70	VALVE BOLTING <2"	-	Y	1	-	-	-	PRR-14, I2P1, I3P1

COMPONENT IDENTIFICATION	ASME CODE CAT	ASME CODE ITEM	DESCRIPTION	ASME CODE EXAM	REL REQ	4TH ISI INTERVAL PER1	PER2	PER3	FAC PROG. EXAM. CREDIT	REMARKS
Main Steam										
Drawing Number: ISI-I-1-1SH2										
Line Number: 20-EB-1										
1-VI-203-1A	B-M-2	B12.50	VALVE INTERNALS	-	-	-	-	-	-	-
1-VI-203-1B	B-M-2	B12.50	VALVE INTERNALS	-	-	-	-	-	-	-
1-VI-203-1C	B-M-2	B12.50	VALVE INTERNALS	-	-	-	-	-	-	-
1-VI-203-1D	B-M-2	B12.50	VALVE INTERNALS	-	-	-	-	-	-	-
1-VI-203-2B	B-M-2	B12.50	VALVE INTERNALS	-	-	-	-	-	-	-
1-VI-203-2C	B-M-2	B12.50	VALVE INTERNALS	-	-	-	-	-	-	-

COMPONENT IDENTIFICATION	ASME CODE CAT	ASME CODE ITEM	DESCRIPTION	ASME CODE EXAM	REL REQ	4TH ISI INTERVAL PER1	PER2	PER3	FAC PROG. EXAM. CREDIT	REMARKS
Main Steam **Drawing Number: ISI-I-1-1SH2** **Line Number: 20-EE-1**										
H-1-1-23	F-A	F1.20-A	RIGID HANGER	-	-	-	-	-	-	I2P3
H-1-1-30	F-A	F1.20-A	RIGID HANGER	-	-	-	-	-	-	I2P3
H-1-1-37	F-A	F1.20-A	RIGID HANGER	-	-	-	-	3	-	I2P3, I3P3
H-1-1-45	F-A	F1.20-A	RIGID HANGER	-	-	-	-	3	-	I2P3, I3P3
H-1-1-204	F-A	F1.20-B	RIGID SUPPORT	-	-	-	-	-	-	I2P3, I3P3
H-1-1-205	F-A	F1.20-B	RIGID SUPPORT	-	-	-	-	-	-	I2P3, I3P3
EE-1-F138	C-F-2	C5.51	VALVE TO PIPE	-	Y	-	-	3	-	PRR-8, I2P3, I3P3
EE-1-F139	C-F-2	C5.51	VALVE TO PIPE	-	Y	-	-	-	-	PRR-8
EE-1-F140	C-F-2	C5.51	VALVE TO PIPE	-	Y	-	-	-	-	PRR-8, I2P3
EE-1-F141	C-F-2	C5.51	VALVE TO PIPE	-	Y	-	-	-	-	PRR-8
SLT MS-1	C-H	C7.10	PRESSURE BOUNDARY	VT-2	-	1	2	3	-	I2P1

COMPONENT IDENTIFICATION	ASME CODE CAT	ASME CODE ITEM	DESCRIPTION	ASME CODE EXAM	REL REQ	4TH ISI INTERVAL PER1	PER2	PER3	FAC PROG. EXAM. CREDIT	REMARKS
Main Steam										
Drawing Number: ISI-I-1-1SH2										
Line Number: 3-EE-1										
EE-1-VBW2-1	B-M-1	B12.30	VALVE BODY WELD	-	-	-	-	3	-	I2P3, I3P3
EE-1-VBW2-2	B-M-1	B12.30	VALVE BODY WELD	-	-	-	-	3	-	I2P3, I3P3
Line Number: 3-EL-1										
1-VB-220-1	B-G-2	B7.70	VALVE BOLTING <2'	-	Y	-	2	-	-	PRR-14, I2P2, I3P2
1-VB-220-2	B-G-2	B7.70	VALVE BOLTING <2'	-	Y	-	2	-	-	PRR-14, I2P2, I3P2
1-SD-10R	R-A	R1.11	PIPE TO VALVE	-	Y	-	-	3	-	RI-ISI; (B-J, B9.21); PRR-10, I2P3, I3P3
1-SD-7R	R-A	R1.11	PIPE TO VALVE	-	Y	-	-	-	-	(B-J, B9.21) PRR-10
1-SD-8R	R-A	R1.11	VALVE TO PIPE	-	Y	1	-	-	-	RI-ISI; (B-J, B9.21); PRR-10, I2P1, I3P1
1-SD-9	R-A	R1.11	FLUED HEAD TO PIPE	-	Y	-	-	-	-	(B-J, B9.21) PRR-10, I2P2
1-SD-9A	R-A	R1.11	PIPE TO PIPE	-	Y	-	-	-	-	(B-J, B9.21) PRR-10
H-1-1-108	F-A	F1.20-B	RIGID SUPPORT	-	-	-	2	-	-	I2P2, I3P2
H-1-1-X8	F-A	F1.10-B	ANCHOR	-	Y	-	2	-	-	I2P2, I3P2
1-SD-1	R-A	R1.11	CAP TO PIPE	-	-	-	-	-	-	(B-J, B9.21)

COMPONENT IDENTIFICATION	ASME CODE CAT	ASME CODE ITEM	DESCRIPTION	ASME CODE EXAM	REL REQ	4TH ISI INTERVAL PER1	PER2	PER3	WELD LTH OR THICK	REMARKS
PASS										
Drawing Number: M239SH1										
Line Number: 1-DC-45										
SLT PASS-1	C-H	C7.10	PRESSURE BOUNDARY	VT-2	-	1	2	3	-	-
SLT PASS-2	C-H	C7.10	PRESSURE BOUNDARY	VT-2	-	1	2	3	-	-
SLT PASS-X15E	C-H	C7.10	TRAIN 'B' DRYWELL GAS SAMPLE LINE	VT-2	-	1	2	3	-	-
SLT PASS-X228C	C-H	C7.10	TRAIN 'B' TORUS GAS SAMPLE LINE	VT-2	-	1	2	3	-	-
SLT PASS-X228J	C-H	C7.10	TRAIN 'A' TORUS GAS SAMPLE LINE	VT-2	-	1	2	3	-	-
SLT PASS-X228K	C-H	C7.10	TRAIN 'B' TORUS RETURN LINE	VT-2	-	1	2	3	-	-
SLT PASS-X29E	C-H	C7.10	TRAIN 'A' DRYWELL GAS SAMPLE LINE	VT-2	-	1	2	3	-	-
SLT PASS-X32A	C-H	C7.10	RX PRESSURE BOUNDARY LEAK DETECTION SYSTEM RETURN	VT-2	-	1	2	3	-	-
SLT PASS-X46F	C-H	C7.10	TRAIN 'A' DRYWELL RETURN LINE	VT-2	-	1	2	3	-	-
SLT PASS-X50A-d	C-H	C7.10	TRAIN 'B' DRYWELL GAS SAMPLE LINE	VT-2	-	1	2	3	-	-
SLT PASS-X106A-b	C-H	C7.10	TRAIN 'A' DRYWELL GAS SAMPLE LINE	VT-2	-	1	2	3	-	-

COMPONENT IDENTIFICATION	ASME CODE CAT	ASME CODE ITEM	DESCRIPTION	ASME CODE EXAM	REL REQ	4TH ISI INTERVAL PER1	PER2	PER3	WELD LTH OR THICK	REMARKS
RBCCW										
Drawing Number: ISI-E122A										
Line Number: N/A										
H-30-1-E122A	F-A	F1.40	HT EX SUPPORT	-	-	-	-	3	-	I2P3, I3P3
30-E122A-HL	D-A	D1.10	HX INTEGRAL ATTMT	-	-	-	-	3	-	I2P3, I3P3

COMPONENT IDENTIFICATION	ASME CODE CAT	ASME CODE ITEM	DESCRIPTION	ASME CODE EXAM	REL REQ	4TH ISI INTERVAL PER1	PER2	PER3	WELD LTH OR THICK	REMARKS
RBCCW										
Drawing Number: ISI-E206A										
Line Number: N/A										
H-19-1-E206A	F-A	F1.40	HT EX SUPPORT	-	-	-	-	3	-	I2P3, I3P3
19-E206A-HL	D-A	D1.10	HX INTEGRAL ATTMT	-	-	-	-	3	-	I2P3, I3P3

COMPONENT IDENTIFICATION	ASME CODE CAT	ASME CODE ITEM	DESCRIPTION	ASME CODE EXAM	REL REQ	4TH ISI INTERVAL PER1	PER2	PER3	WELD LTH OR THICK	REMARKS
RBCCW										
Drawing Number: ISI-E209A										
Line Number: N/A										
H-30-1-E209A	F-A	F1.40	HT EX SUPPORT	-	-	-	-	3	-	I2P3, I3P3
30-E209A-HL	D-A	D1.10	HX INTEGRAL ATTMT	-	-	-	-	3	-	I2P3, I3P3

COMPONENT IDENTIFICATION	ASME CODE CAT	ASME CODE ITEM	DESCRIPTION	ASME CODE EXAM	REL REQ	4TH ISI INTERVAL PER1	PER2	PER3	WELD LTH OR THICK	REMARKS
RBCCW										
Drawing Number: ISI-I-29-1 Sh. 1										
Line Number: N/A										
H-30-1-E122B	F-A	F1.40	HT EX SUPPORT	-	-	-	-	-	-	-
30-E122B-HL	D-A	D1.10	HX INTEGRAL ATTMT	-	-	-	-	-	-	-

COMPONENT IDENTIFICATION	ASME CODE CAT	ASME CODE ITEM	DESCRIPTION	ASME CODE EXAM	REL REQ	4TH ISI INTERVAL PER1	PER2	PER3	WELD LTH OR THICK	REMARKS
RBCCW										
Drawing Number: ISI-I-30-1 Sh. 1										
Line Number: 12"-HE-30										
H-30-1-8SA	F-A	F1.30-B	ANCHOR			-	-	-		I2P3
HE-30-8HL	D-A	D1.20	HANGER LUG			-	-	-		I2P3, I3P2
H30-1-11SA	F-A	F1.30-B	ANCHOR			1	-	-		I2P1, I3P1
HE-30-11PS	D-A	D1.20	STANCHION			-	-	-		I2P3, I3P1
H-30-1-13SR	F-A	F1.30-B	LATERAL RESTRAINT			-	-	-		I2P1
H-30-1-14SG	F-A	F1.30-B	GUIDE			-	-	-		I2P2
H-30-1-15SG	F-A	F1.30-B	RIGID HANGER			-	-	-		I2P2
H-30-1-16SG	F-A	F1.30-B	GUIDE			-	-	-		I2P2
H-30-1-31	F-A	F1.30-B	RIGID HANGER			-	-	-		I2P1
H-30-1-32	F-A	F1.30-A	RIGID SUPPORT			-	-	-		I2P3
H-30-1-33	F-A	F1.30-A	RIGID HANGER			-	-	-		I2P1
H-30-1-34	F-A	F1.30-A	RIGID HANGER			-	-	-		I2P1
H-30-1-36	F-A	F1.30-A	RIGID HANGER			-	-	-		I2P1
H30-1-130	F-A	F1.30-B	RIGID HANGER			-	-	-		I2P2
HE-30-130PS	D-A	D1.20	STANCHION			-	-	-		I2P3, I3P2
H30-1-131	F-A	F1.30-B	RIGID HANGER			-	2	-		I2P2, I3P2
HE-30-131PS	D-A	D1.20	STANCHION			-	-	-		I2P3, I3P2

COMPONENT IDENTIFICATION	ASME CODE CAT	ASME CODE ITEM	DESCRIPTION	ASME CODE EXAM	REL REQ	4TH ISI INTERVAL PER1	PER2	PER3	WELD LTH OR THICK	REMARKS
RBCCW										
Drawing Number: ISI-I-30-1 Sh. 1										
Line Number: 14"-HE-30										
H-30-1-6SS	F-A	F1.30-B	RIGID HANGER			-	-	-	-	I2P1
H-30-1-119	F-A	F1.30-B	RIGID HANGER			-	-	3	-	I2P1, I3P3

COMPONENT IDENTIFICATION	ASME CODE CAT	ASME CODE ITEM	DESCRIPTION	ASME CODE EXAM	REL REQ	4TH ISI INTERVAL PER1	PER2	PER3	WELD LTH OR THICK	REMARKS
RBCCW										
Drawing Number: ISI-I-30-1 Sh. 1										
Line Number: 6"-HE-30										
H-30-1-58SA	F-A	F1.30-B	ANCHOR			-	-	-		I2P1
H-30-1-59SA	F-A	F1.30-B	ANCHOR			-	-	-		I2P2
H-30-1-61SA	F-A	F1.30-B	ANCHOR			-	-	-		I2P2
HE-30-61HL	D-A	D1.20	HANGER LUG			-	-	-		I2P3, I3P3
H-30-1-62SA	F-A	F1.30-B	ANCHOR			-	2	-		I2P2, I3P2
HE-30-62PS	D-A	D2.20	STANCHION			-	-	-		I2P1, I3P2
H30-1-285	F-A	F1.30-B	GUIDE			-	-	-		I2P3
HE-30-285HL	D-A	D1.20	HANGER LUG			-	-	-		I2P3, I3P2
H-30-1-286	F-A	F1.30-B	GUIDE			-	-	-		I2P1
H-30-1-292	F-A	F1.30-B	GUIDE			-	-	-		2P2, I3P2
H30-1-294	F-A	F1.30-B	RIGID HANGER			-	-	-		I2P1
HE-30-294PS	D-A	D1.20	STANCHION			-	-	-		I2P3, I3P2
H30-1-1324SP	F-A	F1.30-B	ANCHOR			-	-	-		I2P3
HE-30-1324HL	D-A	D1.20	HANGER LUG			-	-	-		I2P3, I3P2

COMPONENT IDENTIFICATION	ASME CODE CAT	ASME CODE ITEM	DESCRIPTION	ASME CODE EXAM	REL REQ	4TH ISI INTERVAL PER1	PER2	PER3	WELD LTH OR THICK	REMARKS
RBCCW										
Drawing Number: ISI-I-30-1 Sh. 1										
Line Number: 6"-HE-30										
H-30-1-287	F-A	F1.30-B	GUIDE			-	-	-		I2P1
H-30-1-290	F-A	F1.30-B	GUIDE			-	-	-		I2P2
H-30-1-291	F-A	F1.30-B	GUIDE			-	-	-		I2P2
H-30-1-60SR	F-A	F1.30-B	GUIDE			-	-	-		I2P2
H-30-1-390	F-A	F1.30-B	GUIDE			-	-	-		I2P2
H-30-1-392	F-A	F1.30-B	RIGID HANGER			-	-	-		I2P1
H-30-1-SR10	F-A	F1.30-B	RIGID HANGER			-	-	-		I2P1
H30-1-57SA	F-A	F1.30-B	ANCHOR			-	-	-		I2P1
HE-30-57HL	D-A	D1.20	HANGER LUG			-	-	-		I2P3, I3P3
H30-1-288	F-A	F1.30-B	GUIDE			-	-	-		I2P2
12R-BC-2	N/A	N/A	ELBOW TO PIPE			-	-	-		-

COMPONENT IDENTIFICATION	ASME CODE CAT	ASME CODE ITEM	DESCRIPTION	ASME CODE EXAM	REL REQ	4TH ISI INTERVAL PER1	PER2	PER3	WELD LTH OR THICK	REMARKS
RBCCW										
Drawing Number: ISI-I-30-1 Sh. 1										
Line Number: 8"-HE-30										
H30-1-437	F-A	F1.30-B	RIGID HANGER	-	-	1	-	-	-	I2P1, I3P1
HE-30-437PS	D-A	D1.20	STANCHION	-	-	-	-	-	-	I2P3, I3P1
H30-1-438	F-A	F1.30-B	RIGID HANGER	-	-	-	-	-	-	I2P1
HE-30-438PS	D-A	D1.20	STANCHION	-	-	-	-	-	-	I2P3, I3P3
H30-1-439	F-A	F1.30-B	RIGID HANGER	-	-	-	-	-	-	I2P1
HE-30-439PS	D-A	D1.20	STANCHION	-	-	-	-	-	-	I2P3, I3P3
H30-1-121	F-A	F1.30-B	RIGID HANGER	-	-	-	-	-	-	I2P1
HE-30-121PS	D-A	D1.20	STANCHION	-	-	-	-	-	-	I2P3, I3P1

COMPONENT IDENTIFICATION	ASME CODE CAT	ASME CODE ITEM	DESCRIPTION	ASME CODE EXAM	REL REQ	4TH ISI INTERVAL PER1	PER2	PER3	WELD LTH OR THICK	REMARKS
RBCCW Drawing Number: ISI-I-30-1 Sh. 2 Line Number: 12"-HE-30										
H-30-1-10SS	F-A	F1.30-B	RIGID HANGER	-	-	-	-	-	-	I2P1
HE-30-10PS	D-A	D1.20	STANCHION	-	-	-	-	-	-	I2P3, I3P1
H-30-1-115	F-A	F1.30-A	RIGID HANGER	-	-	-	-	-	-	I2P1
H-30-1-43	F-A	F1.30-A	RIGID HANGER	-	-	-	-	-	-	I2P1
H-30-1-43SH	F-A	F1.30-A	RIGID HANGER	-	-	-	2	-	-	I2P1, I3P2
HE-30-43HL(4)	D-A	D1.20	HANGER LUGS	-	-	-	-	-	-	I2P3, I3P3
H-30-1-44	F-A	F1.30-A	RIGID HANGER	-	-	-	-	-	-	I2P1
H-30-1-40SH	F-A	F1.30-C	SPRING HANGER	-	-	-	2	-	-	I2P1, I3P2
H-30-1-113	F-A	F1.30-B	RIGID HANGER	-	-	-	-	-	-	I2P2
H-30-1-36SA	F-A	F1.30-B	ANCHOR	-	-	-	-	-	-	I2P1
HE-30-36HL	D-A	D1.20	HANGER LUG	-	-	-	-	-	-	I2P3, I3P2
H-30-1-37SR	F-A	F1.30-B	GUIDE	-	-	-	-	-	-	I2P1
HE-30-37HL(4)	D-A	D1.20	HANGER LUGS	-	-	-	-	-	-	I2P3, I3P2
H-30-1-38SH	F-A	F1.30-C	SPRING HANGER	-	-	-	-	-	-	I2P1
H-30-1-39SR	F-A	F1.30-B	LATERAL RESTRAINT	-	-	-	-	-	-	I2P1
H-30-1-41SR	F-A	F1.30-B	GUIDE	-	-	-	-	-	-	I2P1
HE-30-41HL(4)	D-A	D1.20	HANGER LUGS	-	-	-	-	-	-	I2P3, I3P2
H-30-1-42SR	F-A	F1.30-B	GUIDE	-	-	-	-	-	-	I2P1
HE-30-42HL	D-A	D1.20	HANGER LUG	-	-	-	-	-	-	I2P3, I3P2

COMPONENT IDENTIFICATION	ASME CODE CAT	ASME CODE ITEM	DESCRIPTION	ASME CODE EXAM	REL REQ	4TH ISI INTERVAL PER1	PER2	PER3	WELD LTH OR THICK	REMARKS
RBCCW										
Drawing Number: ISI-I-30-1 Sh. 2										
Line Number: 12"-HE-30										
H-30-1-44SG	F-A	F1.30-B	GUIDE	-	-	-	-	-	-	I2P1
H-30-1-46	F-A	F1.30-B	RIGID HANGER	-	-	-	-	-	-	I2P1
HE-30-46PS	D-A	D1.20	STANCHION	-	-	-	-	-	-	I2P3, I3P2

COMPONENT IDENTIFICATION	ASME CODE CAT	ASME CODE ITEM	DESCRIPTION	ASME CODE EXAM	REL REQ	4TH ISI INTERVAL PER1	PER2	PER3	WELD LTH OR THICK	REMARKS
RBCCW										
Drawing Number: ISI-I-30-1 Sh. 2										
Line Number: 14"-HE-30										
H-30-1-111	F-A	F1.30-A	RIGID HANGER	-	-	-	-	-	-	I2P1
H-30-1-112	F-A	F1.30-B	RIGID HANGER	-	-	-	-	-	-	I2P1

COMPONENT IDENTIFICATION	ASME CODE CAT	ASME CODE ITEM	DESCRIPTION	ASME CODE EXAM	REL REQ	4TH ISI INTERVAL PER1	PER2	PER3	WELD LTH OR THICK	REMARKS
RBCCW										
Drawing Number: ISI-I-30-1 Sh. 2										
Line Number: 8"-HE-30										
H30-1-12SA	F-A	F1.30-B	ANCHOR	-	-	-	-	-	-	I2P2
HE-30-12HL	D-A	D1.20	HANGER LUG	-	-	-	-	-	-	I2P3, I3P3
H30-1-104	F-A	F1.30-B	RIGID HANGER	-	-	-	-	-	-	I2P1
HE-30-104PS	D-A	D1.20	STANCHION	-	-	-	-	-	-	I2P3, I3P3
H30-1-440	F-A	F1.30-B	RIGID HANGER	-	-	-	-	-	-	I2P1
HE-30-440PS	D-A	D1.20	STANCHION	-	-	-	-	-	-	I2P3, I3P2
H-30-1-441	F-A	F1.30-B	RIGID HANGER	-	-	-	-	-	-	I2P1
HE-30-441PS	D-A	D1.20	STANCHION	-	-	-	-	-	-	I2P3, I3P2
H-30-1-442	F-A	F1.30-B	RIGID HANGER	-	-	-	-	-	-	I2P1
HE-30-442PS	D-A	D1.20	STANCHION	-	-	-	-	-	-	I2P3, I3P2

COMPONENT IDENTIFICATION	ASME CODE CAT	ASME CODE ITEM	DESCRIPTION	ASME CODE EXAM	REL REQ	4TH ISI INTERVAL PER1	PER2	PER3	WELD LTH OR THICK	REMARKS
RBCCW										
Drawing Number: ISI-I-30-2 Sh. 1										
Line Number: N/A										
H-30-1-P202B	F-A	F1.40	PUMP SUPPORT	-	-	-	-	-	-	-
30-P202B-HL	D-A	D1.30	PUMP INTEGRAL ATTMT	-	-	-	-	-	-	-
H-30-1-P202C	F-A	F1.40	PUMP SUPPORT	-	-	-	-	-	-	-
30-P202C-HL	D-A	D1.30	PUMP INTEGRAL ATTMT	-	-	-	-	-	-	-
H-30-1-E209B	F-A	F1.40	HT EX SUPPORT	-	-	-	-	-	-	-

COMPONENT IDENTIFICATION	ASME CODE CAT	ASME CODE ITEM	DESCRIPTION	ASME CODE EXAM	REL REQ	4TH ISI INTERVAL PER1	PER2	PER3	WELD LTH OR THICK	REMARKS
RBCCW										
Drawing Number: ISI-I-30-2 Sh. 1										
Line Number: 10"-HE-30										
H-30-1-63SA	F-A	F1.30-B	ANCHOR	-	-	-	-	3	-	I2P3, I3P3
HE-30-63HL	D-A	D1.20	HANGER LUG	-	-	-	-	-	-	I2P3, I3P3
H-30-1-64	F-A	F1.30-A	RIGID HANGER	-	-	-	-	-	-	I2P2
H-30-1-64SA	F-A	F1.30-B	ANCHOR	-	-	-	-	-	-	I2P2
HE-30-64HL	D-A	D1.20	HANGER LUG	-	-	-	-	-	-	I2P3, I3P3
H-30-1-69	F-A	F1.30-A	RIGID HANGER	-	-	-	-	-	-	I2P2
H-30-1-1325SP	F-A	F1.30-B	ANCHOR	-	-	-	-	-	-	I2P2

COMPONENT IDENTIFICATION	ASME CODE CAT	ASME CODE ITEM	DESCRIPTION	ASME CODE EXAM	REL REQ	4TH ISI INTERVAL PER1	PER2	PER3	WELD LTH OR THICK	REMARKS
RBCCW										
Drawing Number: ISI-I-30-2 Sh. 1										
Line Number: 12"-HE-30										
H-30-1-24SA	F-A	F1.30-B	ANCHOR	-	-	-	-	-	-	I2P3
HE-30-24HL	D-A	D1.20	HANGER LUG	-	-	-	-	-	-	I2P3, I3P3
H-30-1-25	F-A	F1.30-A	RIGID HANGER	-	-	-	-	-	-	I2P1
H-30-1-25SR	F-A	F1.30-B	LATERAL RESTRAINT	-	-	-	-	-	-	I2P1
HE-30-26HL	D-A	D1.20	HANGER LUG	-	-	-	-	-	-	I2P3, I3P3
H-30-1-26SR	F-A	F1.30-B	LATERAL RESTRAINT	-	-	-	-	-	-	I2P1
H30-1-27	F-A	F1.30-A	RIGID HANGER	-	-	-	-	-	-	I2P1
HE-30-27PS	D-A	D1.20	STANCHION	-	-	-	-	-	-	I2P3, I3P3
H-30-1-28	F-A	F1.30-A	RIGID HANGER	-	-	-	-	-	-	I2P1
H-30-1-29	F-A	F1.30-A	RIGID HANGER	-	-	-	-	-	-	I2P1
HE-30-29PS	D-A	D1.20	STANCHION	-	-	-	-	-	-	I2P3, I3P3
H-30-1-30	F-A	F1.30-A	RIGID HANGER	-	-	-	-	-	-	I2P1
H-30-1-61	F-A	F1.30-B	RIGID HANGER	-	-	-	-	-	-	I2P1
HE-30-61PS	D-A	D1.20	STANCHION	-	-	-	-	-	-	I2P3, I3P3
H-30-1-133	F-A	F1.30-B	RIGID HANGER	-	-	-	-	-	-	I2P2
H-30-1-134	F-A	F1.30-A	RIGID HANGER	-	-	-	-	-	-	I2P2
H-30-1-135	F-A	F1.30-A	RIGID HANGER	-	-	-	2	-	-	I2P2, I3P2

COMPONENT IDENTIFICATION	ASME CODE CAT	ASME CODE ITEM	DESCRIPTION	ASME CODE EXAM	REL REQ	4TH ISI INTERVAL PER1	PER2	PER3	WELD LTH OR THICK	REMARKS
RBCCW										
Drawing Number: ISI-I-30-2 Sh. 1										
Line Number: 16"-HE-30										
H-30-1-62	F-A	F1.30-A	RIGID HANGER	-	-	-	-	-	-	I2P2
H-30-1-63	F-A	F1.30-B	RIGID HANGER	-	-	-	-	-	-	I2P2
H-30-1-65	F-A	F1.30-A	RIGID HANGER	-	-	-	2	-	-	I2P2, I3P2
H-30-1-66	F-A	F1.30-B	RIGID HANGER	-	-	-	-	-	-	I2P1
HE-30-66PS	D-A	D1.20	STANCHION	-	-	1	-	-	-	I2P3, I3P1
H-30-1-67	F-A	F1.30-B	RIGID HANGER	-	-	1	-	-	-	I2P1, I3P1
HE-30-67PS	D-A	D1.20	STANCHION	-	-	1	-	-	-	I2P3, I3P1
H-30-1-68	F-A	F1.30-B	RIGID HANGER	-	-	-	-	-	-	I2P2
HE-30-68PS	D-A	D1.20	STANCHION	-	-	-	-	-	-	I2P3, I3P1

COMPONENT IDENTIFICATION	ASME CODE CAT	ASME CODE ITEM	DESCRIPTION	ASME CODE EXAM	REL REQ	4TH ISI INTERVAL PER1	PER2	PER3	WELD LTH OR THICK	REMARKS
RBCCW										
Drawing Number: ISI-I-30-2 Sh. 1										
Line Number: 6"-HE-30										
H-30-1-69SA/350	F-A	F1.30-B	ANCHOR	-	-	1	-	-	-	I2P1, I3P1
H-30-1-SG11	F-A	F1.30-B	GUIDE	-	-	-	-	-	-	I2P3
H-30-1-66SS/347	F-A	F1.30-B	GUIDE	-	-	-	-	-	-	I2P1
H-30-1-73SH	F-A	F1.30-B	RIGID HANGER	-	-	-	-	-	-	I2P1
H-30-1-67SG/348	F-A	F1.30-B	GUIDE	-	-	-	-	-	-	I2P1
H-30-1-65SH	F-A	F1.30-C	SPRING HANGER	-	-	-	-	-	-	I2P1
HE-30-69PS	D-A	D1.20	STANCHION	-	-	-	-	-	-	I2P3, I3P1
H-30-1-68SG/349	F-A	F1.30-B	GUIDE	-	-	-	-	-	-	I2P1
H-30-1-389	F-A	F1.30-B	GUIDE	-	-	-	-	-	-	I2P3
H-30-1-346	F-A	F1.30-B	GUIDE	-	-	-	-	-	-	I2P2
HE-30-346HL	D-A	D1.20	HANGER LUG	-	-	-	-	-	-	I2P3, I3P3
H-30-1-70SG/351	F-A	F1.30-B	GUIDE	-	-	-	-	-	-	I2P3
H-30-1-71SG/352	F-A	F1.30-B	GUIDE	-	-	-	-	-	-	I2P3
H-30-1-72SG/353	F-A	F1.30-B	GUIDE	-	-	-	-	-	-	I2P3
H-30-1-SS12	F-A	F1.30-C	SNUBBER	-	-	-	-	3	-	I2P2, I3P3
HE-30-SS12HL	D-A	D1.20	HANGER LUG	-	-	-	-	-	-	I2P3, I3P3

COMPONENT IDENTIFICATION	ASME CODE CAT	ASME CODE ITEM	DESCRIPTION	ASME CODE EXAM	REL REQ	4TH ISI INTERVAL PER1	PER2	PER3	WELD LTH OR THICK	REMARKS
RBCCW										
Drawing Number: ISI-I-30-2 Sh. 1										
Line Number: 8"-HE-30										
H-30-1-175	F-A	F1.30-B	RIGID HANGER	-	-	-	-	-	-	I2P1
H-30-1-238	F-A	F1.30-B	RIGID HANGER	-	-	-	-	-	-	I2P1
HE-30-238PS	D-A	D1.20	STANCHION	-	-	-	-	-	-	I2P3, I3P3
H-30-1-239	F-A	F1.30-A	RIGID HANGER	-	-	-	-	-	-	I2P1

COMPONENT IDENTIFICATION	ASME CODE CAT	ASME CODE ITEM	DESCRIPTION	ASME CODE EXAM	REL REQ	4TH ISI INTERVAL PER1	PER2	PER3	WELD LTH OR THICK	REMARKS
RBCCW										
Drawing Number: ISI-I-30-2 Sh. 2										
Line Number: N/A										
30-E209B-HL	D-A	D1.10	HX INTEGRAL ATTMT							
30-P202D-HL	D-A	D1.30	PUMP INTEGRAL ATTMT							
H-30-1-P202D	F-A	F1.40	PUMP SUPPORT							
H-30-1-P202E	F-A	F1.40	PUMP SUPPORT							
H-30-1-P202F	F-A	F1.40	PUMP SUPPORT							
30-P202E-HL	D-A	D1.30	PUMP INTEGRAL ATTMT							
30-P202F-HL	D-A	D1.30	PUMP INTEGRAL ATTMT							

COMPONENT IDENTIFICATION	ASME CODE CAT	ASME CODE ITEM	DESCRIPTION	ASME CODE EXAM	REL REQ	4TH ISI INTERVAL PER1	PER2	PER3	WELD LTH OR THICK	REMARKS
RBCCW										
Drawing Number: ISI-I-30-2 Sh. 2										
Line Number: 12"-HE-30										
H-30-1-1SA	F-A	F1.30-B	ANCHOR		-	-	-	-	-	I2P2, I3P2
HE-30-1HL	D-A	D1.20	HANGER LUG		-	-	-	3	-	I2P3, I3P2
H-30-1-27SA	F-A	F1.30-B	ANCHOR		-	-	-	-	-	I2P2
H-30-1-31SA	F-A	F1.30-B	ANCHOR		-	-	-	-	-	I2P1
HE-30-31HL	D-A	D1.20	HANGER LUG		-	-	-	3	-	I2P3, I3P3
H-30-1-28SR	F-A	F1.30-B	RIGID HANGER		-	-	-	-	-	I2P1
H-30-1-48	F-A	F1.30-C	SPRING HANGER		-	-	-	-	-	I2P2
H-30-1-50	F-A	F1.30-C	SPRING HANGER		-	-	-	-	-	I2P2
H-30-1-51	F-A	F1.30-C	SPRING HANGER		-	-	-	-	-	I2P1
H-30-1-59	F-A	F1.30-B	RIGID HANGER		-	-	-	-	-	I2P1

COMPONENT IDENTIFICATION	ASME CODE CAT	ASME CODE ITEM	DESCRIPTION	ASME CODE EXAM	REL REQ	4TH ISI INTERVAL PER1	PER2	PER3	WELD LTH OR THICK	REMARKS
RBCCW										
Drawing Number: ISI-I-30-2 Sh. 2										
Number: 16"-HE-30										
H-30-1-30SA	F-A	F1.30-B	ANCHOR			-	-	-	-	I2P2
HE-30-30HL	D-A	D1.20	HANGER LUG			-	-	-	-	I2P3, I3P2
H-30-1-32SH	F-A	F1.30-A	RIGID HANGER			-	-	-	-	I2P1
H-30-1-33SR	F-A	F1.30-B	RIGID HANGER			-	-	-	-	I2P1
H30-1-52	F-A	F1.30-B	RIGID HANGER			-	-	-	-	I2P1
HE-30-52PS	D-A	D1.20	STANCHION			-	-	-	-	I2P3, I3P1
H30-1-53	F-A	F1.30-B	RIGID HANGER			-	-	-	-	I2P1
HE-30-53PS	D-A	D1.20	STANCHION			-	-	-	-	I2P3, I3P2
H-30-1-54	F-A	F1.30-B	RIGID HANGER			-	-	-	-	I2P1
HE-30-54PS	D-A	D1.20	STANCHION			-	-	-	-	I2P3, I3P2
H-30-1-57	F-A	F1.30-B	RIGID HANGER			-	-	-	-	I2P1
H-30-1-58	F-A	F1.30-B	RIGID HANGER			-	-	-	-	I2P1

COMPONENT IDENTIFICATION	ASME CODE CAT	ASME CODE ITEM	DESCRIPTION	ASME CODE EXAM	REL REQ	4TH ISI INTERVAL PER1	PER2	PER3	WELD LTH OR THICK	REMARKS
RBCCW										
Drawing Number: ISI-I-30-2 Sh. 2										
Line Number: 10"-HE-30										
H-30-1-34SR	F-A	F1.30-B	RIGID HANGER							I2P1

COMPONENT IDENTIFICATION	ASME CODE CAT	ASME CODE ITEM	DESCRIPTION	ASME CODE EXAM	REL REQ	4TH ISI INTERVAL PER1	PER2	PER3	WELD LTH OR THICK	REMARKS
RBCCW										
Drawing Number: ISI-I-30-2 Sh. 2										
Line Number: 8"-HE-30										
H-30-1-99	F-A	F1.30-B	RIGID HANGER	-	-	1	-	-	-	I2P1, I3P1
HE-30-99PS	D-A	D1.20	STANCHION	-	-	1	-	-	-	I2P1, I3P1
H-30-1-1224	F-A	F1.30-B	RESTRAINT	-	-	-	-	-	-	I2P2
H-30-1-1228	F-A	F1.30-B	RESTRAINT	-	-	-	-	-	-	I2P1

COMPONENT IDENTIFICATION	ASME CODE CAT	ASME CODE ITEM	DESCRIPTION	ASME CODE EXAM	REL REQ	4TH ISI INTERVAL PER1	PER2	PER3	WELD LTH OR THICK	REMARKS
RBCCW										
Drawing Number: ISI-I-30-4 Sh. 1										
Line Number: 8"-HE-30										
H30-1-12SA	F-A	F1.30-B	HANGER SUPPORT	VT-3						INTEGRAL ATTACHMENT HE-30-12PS
HE-30-12PS	D-A	D1.20	INTEGRAL ATTACHMENT	VT-3						AT HANGER H30-1-12SA
H30-1-101SA	N/A	PBO	HANGER SUPPORT	VT-3						INTEGRAL ATTACHMENT HE-30-101HL
HE-30-101HL	N/A	PBO	INTEGRAL ATTACHMENT	VT-3						AT HANGER H30-1-101SA
H30-1-107	N/A	PBO	HANGER SUPPORT	VT-3				3		
H30-1-109	N/A	PBO	HANGER SUPPORT	VT-3						
H30-1-110	N/A	PBO	HANGER SUPPORT	VT-3						
H30-1-114SR	N/A	PBO	RIGID SUPPORT	VT-3				3		
H30-1-115SA	N/A	PBO	HANGER SUPPORT	VT-3						INTEGRAL ATTACHMENT HE-30-115PS
HE-30-115PS	N/A	PBO	INTEGRAL ATTACHMENT	VT-3						AT HANGER H30-1-115SA
H30-1-296	N/A	PBO	HANGER SUPPORT	VT-3						INTEGRAL ATTACHMENT HE-30-296HL
HE-30-296HL	N/A	PBO	INTEGRAL ATTACHMENT	VT-3						AT HANGER H30-1-296
H30-1-1330SP	N/A	PBO	HANGER SUPPORT	VT-3						INTEGRAL ATTACHMENT HE-30-1330HL
HE-30-1330HL	N/A	PBO	INTEGRAL ATTACHMENT	VT-3						AT HANGER H30-1-1330SP
SLT 8"-HE-30	N/A	PBO	PRESSURE BOUNDARY	VT-2				3		ONCE PER INTERVAL

COMPONENT IDENTIFICATION	ASME CODE CAT	ASME CODE ITEM	DESCRIPTION	ASME CODE EXAM	REL REQ	4TH ISI INTERVAL PER1	PER2	PER3	WELD LTH OR THICK	REMARKS
RBCCW										
Drawing Number: ISI-I-30-4 Sh. 1										
Line Number: 6"-HE-30										
H30-1-40	N/A	PBO	HANGER SUPPORT	VT-3						
H30-1-41	N/A	PBO	HANGER SUPPORT	VT-3						
H30-1-102SR	N/A	PBO	HANGER SUPPORT	VT-3				3		INTEGRAL ATTACHMENT HE-30-102HL
HE-30-102HL	N/A	PBO	INTEGRAL ATTACHMENT	VT-3				3		AT HANGER H30-1-102SR
H30-1-103SR	N/A	PBO	HANGER SUPPORT	VT-3				3		INTEGRAL ATTACHMENT HE-30-103HL
HE-30-103HL	N/A	PBO	INTEGRAL ATTACHMENT	VT-3				3		AT HANGER H30-1-103SR
H30-1-104SA	N/A	PBO	HANGER SUPPORT	VT-3						INTEGRAL ATTACHMENT HE-30-104PS
HE-30-104PS	N/A	PBO	INTEGRAL ATTACHMENT	VT-3						AT HANGER H30-1-104SA
H30-1-105SR	N/A	PBO	HANGER SUPPORT	VT-3						INTEGRAL ATTACHMENT HE-30-105PS
HE-30-105PS	N/A	PBO	INTEGRAL ATTACHMENT	VT-3						AT HANGER H30-1-105SR
H30-1-106SR	N/A	PBO	SUPPORT	VT-3						
H30-1-107SR	N/A	PBO	HANGER SUPPORT	VT-3						INTEGRAL ATTACHMENT HE-30-107HL
HE-30-107HL	N/A	PBO	INTEGRAL ATTACHMENT	VT-3						AT HANGER H30-1-107SR
H30-1-108SH	N/A	PBO	HANGER SUPPORT	VT-3				3		INTEGRAL ATTACHMENT HE-30-108HL
HE-30-108HL	N/A	PBO	INTEGRAL ATTACHMENT	VT-3				3		AT HANGER H30-1-108SH
H30-1-109SA	N/A	PBO	HANGER SUPPORT	VT-3						INTEGRAL ATTACHMENT HE-30-109PS
HE-30-109PS	N/A	PBO	INTEGRAL ATTACHMENT	VT-3						AT HANGER H30-1-109SA
H30-1-110SA	N/A	PBO	HANGER SUPPORT	VT-3						INTEGRAL ATTACHMENT HE-30-110PS
HE-30-110PS	N/A	PBO	INTEGRAL ATTACHMENT	VT-3						AT HANGER H30-1-110SA

COMPONENT IDENTIFICATION	ASME CODE CAT	ASME CODE ITEM	DESCRIPTION	ASME CODE EXAM	REL REQ	4TH ISI INTERVAL PER1	PER2	PER3	WELD LTH OR THICK	REMARKS
RBCCW										
Drawing Number: ISI-I-30-4 Sh. 1										
Line Number: 6"-HE-30										
H30-1-116SA	N/A	PBO	HANGER SUPPORT	VT-3						INTEGRAL ATTACHMENT HE-30-116PS
HE-30-116PS	N/A	PBO	INTEGRAL ATTACHMENT	VT-3						AT HANGER H30-1-116SA
H30-1-117SR	N/A	PBO	RESTRAINT	VT-3						
H30-1-118SH	N/A	PBO	SPRING HANGER	VT-3						
H30-1-297	N/A	PBO	HANGER SUPPORT	VT-3				3		
H30-1-298	N/A	PBO	HANGER SUPPORT	VT-3						
H30-1-299	N/A	PBO	HANGER SUPPORT	VT-3						
H30-1-301	N/A	PBO	HANGER SUPPORT	VT-3						
H30-1-302	N/A	PBO	HANGER SUPPORT	VT-3						
H30-1-303	N/A	PBO	HANGER SUPPORT	VT-3						
H30-1-304	N/A	PBO	HANGER SUPPORT	VT-3						
H30-1-305	N/A	PBO	HANGER SUPPORT	VT-3						
H30-1-306	N/A	PBO	HANGER SUPPORT	VT-3						INTEGRAL ATTACHMENT HE-30-306PS
HE-30-306PS	N/A	PBO	INTEGRAL ATTACHMENT	VT-3						AT HANGER H30-1-306
H30-1-307	N/A	PBO	HANGER SUPPORT	VT-3						INTEGRAL ATTACHMENT HE-30-307HL
HE-30-307HL	N/A	PBO	INTEGRAL ATTACHMENT	VT-3						AT HANGER H30-1-307
H30-1-308	N/A	PBO	SUPPORT	VT-3						
H30-1-309	N/A	PBO	SUPPORT	VT-3						
H30-1-310	N/A	PBO	SUPPORT	VT-3						

COMPONENT IDENTIFICATION	ASME CODE CAT	ASME CODE ITEM	DESCRIPTION	ASME CODE EXAM	REL REQ	4TH ISI INTERVAL PER1	PER2	PER3	WELD LTH OR THICK	REMARKS
RBCCW										
Drawing Number: ISI-I-30-4 Sh. 1										
Line Number: 6"-HE-30										
H30-1-312	N/A	PBO	SUPPORT	VT-3						
H30-1-313	N/A	PBO	SUPPORT	VT-3						
H30-1-314	N/A	PBO	SUPPORT	VT-3						
H30-1-315	N/A	PBO	HANGER SUPPORT	VT-3						INTEGRAL ATTACHMENT HE-30-315PS
HE-30-315PS	N/A	PBO	INTEGRAL ATTACHMENT	VT-3						AT HANGER H30-1-315
H30-1-385	N/A	PBO	SUPPORT	VT-3						
H30-1-386	N/A	PBO	SUPPORT	VT-3						
SLT 6"-HE-30	N/A	PBO	PRESSURE BOUNDARY	VT-2				3		ONCE PER INTERVAL

COMPONENT IDENTIFICATION	ASME CODE CAT	ASME CODE ITEM	DESCRIPTION	ASME CODE EXAM	REL REQ	4TH ISI INTERVAL PER1	PER2	PER3	WELD LTH OR THICK	REMARKS
RBCCW										
Drawing Number: ISI-I-30-4 Sh. 2										
Line Number: 6"-HE-30										
H30-1-SR-15	N/A	PBO	HANGER SUPPORT	VT-3						INTEGRAL ATTACHMENT HE-30-15HL
HE-30-15HL	N/A	PBO	INTEGRAL ATTACHMENT	VT-3						AT HANGER H30-1-SR-15
H30-1-38	N/A	PBO	HANGER SUPPORT	VT-3						
H30-1-39	N/A	PBO	HANGER SUPPORT	VT-3						
H30-1-95SR	N/A	PBO	HANGER SUPPORT	VT-3				3		INTEGRAL ATTACHMENT HE-30-95HL
HE-30-95HL	N/A	PBO	INTEGRAL ATTACHMENT	VT-3				3		AT HANGER H30-1-95SR
H30-1-96SA	N/A	PBO	HANGER SUPPORT	VT-3						INTEGRAL ATTACHMENT HE-30-96PS
HE-30-96PS	N/A	PBO	INTEGRAL ATTACHMENT	VT-3						AT HANGER H30-1-96SA
H30-1-97SR	N/A	PBO	RESTRAINT	VT-3						
H30-1-98SH	N/A	PBO	HANGER SUPPORT	VT-3				3		INTEGRAL ATTACHMENT HE-30-98HL
HE-30-98HL	N/A	PBO	INTEGRAL ATTACHMENT	VT-3				3		AT HANGER H30-1-98SH
H30-1-99SA	N/A	PBO	HANGER SUPPORT	VT-3				3		INTEGRAL ATTACHMENT HE-30-99PS
HE-30-99PS	N/A	PBO	INTEGRAL ATTACHMENT	VT-3				3		AT HANGER H30-1-99SA
H30-1-100SR	N/A	PBO	HANGER SUPPORT	VT-3						INTEGRAL ATTACHMENT HE-30-100PS
HE-30-100PS	N/A	PBO	INTEGRAL ATTACHMENT	VT-3						AT HANGER H30-1-100SR
H30-1-112SR	N/A	PBO	HANGER SUPPORT	VT-3						INTEGRAL ATTACHMENT HE-30-112HL
HE-30-112HL	N/A	PBO	INTEGRAL ATTACHMENT	VT-3						AT HANGER H30-1-112SR
H30-1-113SR	N/A	PBO	HANGER SUPPORT	VT-3						
H30-1-318	N/A	PBO	RIGID SUPPORT	VT-3				3		

COMPONENT IDENTIFICATION	ASME CODE CAT	ASME CODE ITEM	DESCRIPTION	ASME CODE EXAM	REL REQ	4TH ISI INTERVAL PER1	PER2	PER3	WELD LTH OR THICK	REMARKS
RBCCW										
Drawing Number: ISI-I-30-4 Sh. 2										
Line Number: 6"-HE-30										
H30-1-319	N/A	PBO	RIGID SUPPORT	VT-3						
H30-1-320	N/A	PBO	RIGID SUPPORT	VT-3						
H30-1-322	N/A	PBO	RIGID SUPPORT	VT-3						
H30-1-323	N/A	PBO	RIGID SUPPORT	VT-3						
H30-1-324	N/A	PBO	RIGID SUPPORT	VT-3						
H30-1-325	N/A	PBO	RIGID SUPPORT	VT-3						
H30-1-326	N/A	PBO	RIGID SUPPORT	VT-3						
H30-1-327	N/A	PBO	GUIDE SUPPORT	VT-3						
H30-1-328	N/A	PBO	GUIDE SUPPORT	VT-3						
H30-1-329	N/A	PBO	GUIDE SUPPORT	VT-3						
H30-1-330	N/A	PBO	GUIDE SUPPORT	VT-3						
H30-1-332	N/A	PBO	GUIDE SUPPORT	VT-3						
H30-1-333	N/A	PBO	GUIDE SUPPORT	VT-3						
H30-1-334	N/A	PBO	GUIDE SUPPORT	VT-3						
H30-1-388	N/A	PBO	GUIDE SUPPORT	VT-3						
H30-1-1218	N/A	PBO	RESTRAINT	VT-3						
H30-1-1219	N/A	PBO	RESTRAINT	VT-3						
SLT 6"-HE-30	N/A	PBO	PRESSURE BOUNDARY	VT-2				3		ONCE PER INTERVAL

COMPONENT IDENTIFICATION	ASME CODE CAT	ASME CODE ITEM	DESCRIPTION	ASME CODE EXAM	REL REQ	4TH ISI INTERVAL PER1	PER2	PER3	WELD LTH OR THICK	REMARKS
RBCCW										
Drawing Number: ISI-I-30-4 Sh. 2										
Line Number: 8"-HE-30										
H30-1-29SA	F-A	F1.30-B	HANGER SUPPORT	VT-3						INTEGRAL ATTACHMENT HE-30-29PS
HE-30-29PS	D-A	D1.20	INTEGRAL ATTACHMENT	VT-3						AT HANGER H30-1-29SA
H30-1-94SA	N/A	PBO	HANGER SUPPORT	VT-3						INTEGRAL ATTACHMENT HE-30-94HL
HE-30-94HL	N/A	PBO	INTEGRAL ATTACHMENT	VT-3						AT HANGER H30-1-94SA
H30-1-103	N/A	PBO	HANGER SUPPORT	VT-3						
H30-1-111SR	N/A	PBO	GUIDE SUPPORT	VT-3						
H30-1-126SG	N/A	PBO	GUIDE SUPPORT	VT-3						INTEGRAL ATTACHMENT HE-30-126PS
HE-30-126PS	N/A	PBO	INTEGRAL ATTACHMENT	VT-3						AT HANGER H30-1-126SG
H30-1-1236	N/A	PBO	RESTRAINT	VT-3						
H30-1-1331SP	N/A	PBO	HANGER SUPPORT	VT-3						INTEGRAL ATTACHMENT HE-30-1331HL
HE-30-1331HL	N/A	PBO	INTEGRAL ATTACHMENT	VT-3						AT HANGER H30-1-1331SP
H30-1-317	N/A	PBO	HANGER SUPPORT	VT-3						INTEGRAL ATTACHMENT HE-30-317HL
HE-30-317HL	N/A	PBO	INTEGRAL ATTACHMENT	VT-3						AT HANGER H30-1-317
SLT 8"-HE-30	N/A	PBO	PRESSURE BOUNDARY	VT-2				3		ONCE PER INTERVAL

COMPONENT IDENTIFICATION	ASME CODE CAT	ASME CODE ITEM	DESCRIPTION	ASME CODE EXAM	REL REQ	4TH ISI INTERVAL PER1	PER2	PER3	WELD LTH OR THICK	REMARKS
RBCCW										
Drawing Number: ISI-I-30-4 Sh. 2										
Line Number: N/A										
H30-1-E-206B	N/A	PBO	HANGER SUPPORT	VT-3				3		INTEGRAL ATTACHMENT HE-30-206BPS
HE-30-206BPS	N/A	PBO	INTEGRAL ATTACHMENT	VT-3				3		AT HEAT EXCH. E-206B
H30-1-E-216A	N/A	PBO	HANGER SUPPORT	VT-3				3		INTEGRAL ATTACHMENT HE-30-216APS
HE-30-216APS	N/A	PBO	INTEGRAL ATTACHMENT	VT-3				3		AT HEAT EXCH. E-216A

COMPONENT IDENTIFICATION	ASME CODE CAT	ASME CODE ITEM	DESCRIPTION	ASME CODE EXAM	REL REQ	4TH ISI INTERVAL PER1	PER2	PER3	WELD LTH OR THICK	REMARKS
RBCCW										
Drawing Number: ISI-I-30-5										
Line Number: 6"-HE-30										
H30-1-171	N/A	PBO	HANGER	VT-3				3		INTEGRAL ATTACHMENT HE-30-171HL
HE-30-171HL	N/A	PBO	INTEGRAL ATTACHMENT	VT-3				3		AT HANGER H30-1-171
H30-1-172	N/A	PBO	HANGER	VT-3						INTEGRAL ATTACHMENT HE-30-172HL
HE-30-172HL	N/A	PBO	INTEGRAL ATTACHMENT	VT-3						AT HANGER H30-1-172
H30-1-173	N/A	PBO	HANGER	VT-3						
H30-1-SA-6	N/A	PBO	SUPPORT	VT-3						INTEGRAL ATTACHMENT HE-30-6HL
HE-30-6PS	N/A	PBO	INTEGRAL ATTACHMENT	VT-3						AT HANGER H30-1-SA-6
H30-1-SR-7	N/A	PBO	SUPPORT	VT-3						INTEGRAL ATTACHMENT HE-30-7HL
HE-30-7HL	N/A	PBO	INTEGRAL ATTACHMENT	VT-3						AT HANGER H30-1-SR-7
SLT 6"-HE-30	N/A	PBO	PRESSURE BOUNDARY	VT-2				3		ONCE PER INTERVAL

COMPONENT IDENTIFICATION	ASME CODE CAT	ASME CODE ITEM	DESCRIPTION	ASME CODE EXAM	REL REQ	4TH ISI INTERVAL PER1	PER2	PER3	WELD LTH OR THICK	REMARKS
RBCCW										
Drawing Number: ISI-I-30-5										
Line Number: 8"-HE-30										
H30-1-SA-1	N/A	PBO	HANGER SUPPORT	VT-3						INTEGRAL ATTACHMENT HE-30-1HL
HE-30-1HL	N/A	PBO	INTEGRAL ATTACHMENT	VT-3						AT HANGER H30-1-SA-1
H30-1-SA-3	N/A	PBO	HANGER SUPPORT	VT-3						INTEGRAL ATTACHMENT HE-30-3PS
HE-30-3PS	N/A	PBO	INTEGRAL ATTACHMENT	VT-3						AT HANGER H30-1-SA-3
H30-1-SR-4	N/A	PBO	GUIDE	VT-3						
H30-1-SR-5	N/A	PBO	GUIDE	VT-3						
H30-1-7SA	F-A	F1.30-B	ANCHOR	VT-3			2			INTEGRAL ATTACHMENT HE-30-7PS
HE-30-7PS	D-A	D1.20	INTEGRAL ATTACHMENT	VT-3			2			AT HANGER H30-1-7SA
H30-1-74SA	F-A	F1.30-B	HANGER SUPPORT	VT-3			2			INT. ATTACH. HE-30-74PS; I2P2, I3P2
HE-30-74PS	D-A	D1.20	INTEGRAL ATTACHMENT	VT-3			2			AT HANGER H30-1-74SA
H30-1-174	N/A	PBO	HANGER	VT-3				3		
H30-1-1238	N/A	PBO	GUIDE	VT-3						
H30-1-SG-2	N/A	PBO	RESTRAINT	VT-3						
H30-1-1328SP	N/A	PBO	HANGER SUPPORT	VT-3						INTEGRAL ATTACHMENT HE-30-1328HL
HE-30-1328HL	N/A	PBO	INTEGRAL ATTACHMENT	VT-3						AT HANGER H30-1-1328SP
SLT 8"-HE-30	N/A	PBO	PRESSURE BOUNDARY	VT-2				3		ONCE PER INTERVAL

COMPONENT IDENTIFICATION	ASME CODE CAT	ASME CODE ITEM	DESCRIPTION	ASME CODE EXAM	REL REQ	4TH ISI INTERVAL PER1	PER2	PER3	WELD LTH OR THICK	REMARKS
RBCCW										
Drawing Number: ISI-I-30-5										
Line Number: N/A										
H30-1-E211A	N/A	PBO	HANGER SUPPORT	VT-3				3		INTEGRAL ATTACHMENT HE-30-211APS
HE-30-211APS	N/A	PBO	INTEGRAL ATTACHMENT	VT-3				3		AT HEAT EXCH. E-211A
H30-1-E211B	N/A	PBO	HANGER SUPPORT	VT-3						INTEGRAL ATTACHMENT HE-30-211BPS
HE-30-211BPS	N/A	PBO	INTEGRAL ATTACHMENT	VT-3						AT HEAT EXCH. E-211B

COMPONENT IDENTIFICATION	ASME CODE CAT	ASME CODE ITEM	DESCRIPTION	ASME CODE EXAM	REL REQ	4TH ISI INTERVAL PER1	PER2	PER3	WELD LTH OR THICK	REMARKS
RBCCW										
Drawing Number: ISI-I-30-6										
Line Number: 6"-HE-30										
H30-1-443	N/A	PBO	GUIDE	VT-3						
H30-1-452	N/A	PBO	HANGER	VT-3						INTEGRAL ATTACHMENT HE-30-452HL
HE-30-452HL	N/A	PBO	INTEGRAL ATTACHMENT	VT-3						AT HANGER H30-1-452
H30-1-454	N/A	PBO	HANGER	VT-3						
H30-1-494	N/A	PBO	RESTRAINT	VT-3						
H30-1-495	N/A	PBO	GUIDE	VT-3						
H30-1-496	N/A	PBO	RESTRAINT	VT-3						
H30-1-497	N/A	PBO	RESTRAINT	VT-3						
H30-1-498	N/A	PBO	RESTRAINT	VT-3						
H30-1-499	N/A	PBO	GUIDE	VT-3						
H30-1-500	N/A	PBO	RESTRAINT	VT-3						
H30-1-501	N/A	PBO	GUIDE	VT-3						
H30-1-502	N/A	PBO	RESTRAINT	VT-3						
H30-1-503	N/A	PBO	RESTRAINT	VT-3						
H30-1-504	N/A	PBO	RESTRAINT	VT-3						
H30-1-505	N/A	PBO	GUIDE	VT-3						
H30-1-506	N/A	PBO	GUIDE	VT-3						
H30-1-507	N/A	PBO	RESTRAINT	VT-3						
SLT 6"-HE-30	N/A	PBO	PRESSURE BOUNDARY	VT-2				3		ONCE PER INTERVAL

COMPONENT IDENTIFICATION	ASME CODE CAT	ASME CODE ITEM	DESCRIPTION	ASME CODE EXAM	REL REQ	4TH ISI INTERVAL PER1	PER2	PER3	WELD LTH OR THICK	REMARKS
RBCCW										
Drawing Number: ISI-P202A										
Line Number: N/A										
H-30-1-P202A	F-A	F1.40	PUMP SUPPORT					3		I2P3, I3P3
30-P202A-HL	D-A	D1.30	PUMP INTEGRAL ATTACH.							

COMPONENT IDENTIFICATION	ASME CODE CAT	ASME CODE ITEM	DESCRIPTION	ASME CODE EXAM	REL REQ	4TH ISI INTERVAL PER1	PER2	PER3	WELD LTH OR THICK	REMARKS
RBCCW **Drawing Number: VARIOUS** **Line Number: N/A**										
SLT RBCCW-1	D-B	D2.10	PRESSURE BOUNDARY	VT-2	-	1	2	3	-	PIL-05-R-003
SLT RBCCW-2	D-B	D2.10	PRESSURE BOUNDARY	VT-2	-	1	2	3	-	PIL-05-R-003
SLT RBCCW-3	D-B	D2.10	PRESSURE BOUNDARY	VT-2	-	1	2	3	-	PIL-05-R-003
SLT RBCCW-4	D-B	D2.10	PRESSURE BOUNDARY	VT-2	-	1	2	3	-	PIL-05-R-003
SLT RBCCW-5	D-B	D2.10	PRESSURE BOUNDARY	VT-2	-	1	2	3	-	PIL-05-R-003
SLT RBCCW-6	D-B	D2.10	PRESSURE BOUNDARY	VT-2	-	1	2	3	-	PIL-05-R-003
SLT RBCCW-7	D-B	D2.10	PRESSURE BOUNDARY	VT-2	-	1	2	3	-	PIL-05-R-003
SLT RBCCW-8	D-B	D2.10	PRESSURE BOUNDARY	VT-2	-	1	2	3	-	PIL-05-R-003
SLT RBCCW-9	D-B	D2.10	PRESSURE BOUNDARY	VT-2	-	1	2	3	-	PIL-05-R-003
SLT RBCCW-10	D-B	D2.10	PRESSURE BOUNDRY	VT-2	-	1	2	3	-	PIL-05-R-003
SLT RBCCW-11	D-B	D2.10	PRESSURE BOUNDRY	VT-2	-	1	2	3	-	PIL-05-R-003

COMPONENT IDENTIFICATION	ASME CODE CAT	ASME CODE ITEM	DESCRIPTION	ASME CODE EXAM	REL REQ	4TH ISI INTERVAL PER1	PER2	PER3	WELD LTH OR THICK	REMARKS
RBCCW **Drawing Number: VARIOUS** **Line Number: N/A**										
VAC-205A	N/A	PBO	DRYWELL COOLER	VT-2	-	-	-	3	-	IWD-5221 SYSTEM LEAKAGE TEST
VAC-205B	N/A	PBO	DRYWELL COOLER	VT-2	-	-	-	3	-	IWD-5221 SYSTEM LEAKAGE TEST
VAC-205C	N/A	PBO	DRYWELL COOLER	VT-2	-	-	-	3	-	IWD-5221 SYSTEM LEAKAGE TEST
VAC-205D	N/A	PBO	DRYWELL COOLER	VT-2	-	-	-	3	-	IWD-5221 SYSTEM LEAKAGE TEST
VAC-205E	N/A	PBO	DRYWELL COOLER	VT-2	-	-	-	3	-	IWD-5221 SYSTEM LEAKAGE TEST
VAC-205F	N/A	PBO	DRYWELL COOLER	VT-2	-	-	-	3	-	IWD-5221 SYSTEM LEAKAGE TEST
VAC-206A	N/A	PBO	DRYWELL COOLER	VT-2	-	-	-	3	-	IWD-5221 SYSTEM LEAKAGE TEST
VAC-206B	N/A	PBO	DRYWELL COOLER	VT-2	-	-	-	3	-	IWD-5221 SYSTEM LEAKAGE TEST
E-213A	N/A	PBO	RECIRC. PUMP SEAL WATER COOLER	VT-2	-	-	-	3	-	IWD-5221 SYSTEM LEAKAGE TEST
E-213B	N/A	PBO	RECIRC. PUMP SEAL WATER COOLER	VT-2	-	-	-	3	-	IWD-5221 SYSTEM LEAKAGE TEST
E-214A	N/A	PBO	RECIRC. PUMP LUBE OIL COOLER	VT-2	-	-	-	3	-	IWD-5221 SYSTEM LEAKAGE TEST
E-214B	N/A	PBO	RECIRC. PUMP LUBE OIL COOLER	VT-2	-	-	-	3	-	IWD-5221 SYSTEM LEAKAGE TEST
P-209A	N/A	PBO	CRD PUMP THRUST BEARING COOLER	VT-2	-	-	-	3	-	IWD-5221 SYSTEM LEAKAGE TEST
P-209B	N/A	PBO	CRD PUMP THRUST BEARING COOLER	VT-2	-	-	-	3	-	IWD-5221 SYSTEM LEAKAGE TEST
E-212A	N/A	PBO	CRD PUMP LUBE OIL COOLER	VT-2	-	-	-	3	-	IWD-5221 SYSTEM LEAKAGE TEST

COMPONENT IDENTIFICATION	ASME CODE CAT	ASME CODE ITEM	DESCRIPTION	ASME CODE EXAM	REL REQ	4TH ISI INTERVAL PER1	PER2	PER3	WELD LTH OR THICK	REMARKS
RBCCW **Drawing Number: VARIOUS** **Line Number: N/A**										
E-212B	N/A	PBO	CRD PUMP LUBE OIL COOLER	VT-2	-	-	-	3	-	IWD-5221 SYSTEM LEAKAGE TEST
VAC-203A	N/A	PBO	CRD PUMP AREA COOLER	VT-2	-	-	-	3	-	IWD-5221 SYSTEM LEAKAGE TEST
VAC-203B	N/A	PBO	CRD PUMP AREA COOLER	VT-2	-	-	-	3	-	IWD-5221 SYSTEM LEAKAGE TEST
E-215A	N/A	PBO	CLEAN-UP RECIRC. PUMP COOLING SYSTEM	VT-2	-	-	-	3	-	IWD-5221 SYSTEM LEAKAGE TEST
E-215B	N/A	PBO	CLEAN-UP RECIRC. PUMP COOLING SYSTEM	VT-2	-	-	-	3	-	IWD-5221 SYSTEM LEAKAGE TEST
E-216A	N/A	PBO	CLEAN-UP DEMIN. NON-REGEN. HX	VT-2	-	-	-	3	-	IWD-5221 SYSTEM LEAKAGE TEST
E-216B	N/A	PBO	CLEAN-UP DEMIN. NON-REGEN. HX	VT-2	-	-	-	3	-	IWD-5221 SYSTEM LEAKAGE TEST
E-206B	N/A	PBO	FUEL POOL HX.	VT-2	-	-	-	3	-	IWD-5221 SYSTEM LEAKAGE TEST
VAC-207A	N/A	PBO	M-G SET AREA COOLER	VT-2	-	-	-	3	-	IWD-5221 SYSTEM LEAKAGE TEST
VAC-207B	N/A	PBO	M-G SET AREA COOLER	VT-2	-	-	-	3	-	IWD-5221 SYSTEM LEAKAGE TEST
VAC-207C	N/A	PBO	M-G SET AREA COOLER	VT-2	-	-	-	3	-	IWD-5221 SYSTEM LEAKAGE TEST
VAC-207D	N/A	PBO	M-G SET AREA COOLER	VT-2	-	-	-	3	-	IWD-5221 SYSTEM LEAKAGE TEST
E-211A	N/A	PBO	M-G SET FLUID COUPLING & BEARING OIL COOLER	VT-2	-	-	-	3	-	IWD-5221 SYSTEM LEAKAGE TEST
E-211B	N/A	PBO	M-G SET FLUID COUPLING & BEARING OIL COOLER	VT-2	-	-	-	3	-	IWD-5221 SYSTEM LEAKAGE TEST

COMPONENT IDENTIFICATION	ASME CODE CAT	ASME CODE ITEM	DESCRIPTION	ASME CODE EXAM	REL REQ	4TH ISI INTERVAL PER1	PER2	PER3	WELD LTH OR THICK	REMARKS
RBCCW **Drawing Number: VARIOUS** **Line Number: N/A**										
H-19-1-E206B	N/A	PBO	FUEL POOL HX E-206B HX SUPPORT	VT-3	-	-	-	3	-	19-E206B-HL
19-E206B-HL	N/A	PBO	FUEL POOL HX E-206B SUPPORT INTEGRAL ATTACHMENT	VT-3	-	-	-	3	-	H-19-1-E206B
E-216A SUPPORT	N/A	PBO	CLEAN-UP DEMIN. NON-REGEN. HX E-216A HX SUPPORT	VT-3	-	-	-	3	-	
E-216A INT. ATT.	N/A	PBO	CLEAN-UP DEMIN. NON-REGEN. HX E-216A SUPPORT INTEGRAL ATTACHMENT	VT-3	-	-	-	3	-	
E-211B SUPPORT	N/A	PBO	M-G SET FLUID COUPLING & BEARING OIL COOLER E-211B HX SUPPORT	VT-3	-	-	-	3	-	
E-211B INT. ATT.	N/A	PBO	M-G SET FLUID COUPLING & BEARING OIL COOLER E-211B SUPPORT INTEGRAL ATTACHMENT	VT-3	-	-	-	3	-	

COMPONENT IDENTIFICATION	ASME CODE CAT	ASME CODE ITEM	DESCRIPTION	ASME CODE EXAM	REL REQ	4TH ISI INTERVAL PER1	PER2	PER3	WELD LTH OR THICK	REMARKS
RCIC **Drawing Number: ISI-I-13-1** **Line Number: 3-EB-13**										
13-O-1	R-A	R1.20	TEE TO PIPE	-	Y	-	-	-	-	(B-J, B9.21) PPR-10
13-O-2	R-A	R1.20	PIPE TO PIPE	-	Y	-	-	-	-	(B-J, B9.21) PPR-10
13-O-3	R-A	R1.20	PIPE TO ELBOW	-	Y	-	-	-	-	(B-J, B9.21) PPR-10, I2P1, I3P1
13-O-4	R-A	R1.20	ELBOW TO PIPE	-	Y	-	-	-	-	(B-J, B9.21) PPR-10, I2P1, I3P1
13-O-5	R-A	R1.20	PIPE TO VALVE	-	Y	-	-	-	-	(B-J, B9.21) PPR-10
13-O-6	R-A	R1.20	VALVE TO ELBOW	-	Y	-	-	-	-	(B-J, B9.21) PPR-10
13-O-10	R-A	R1.20	PIPE TO ELBOW	-	Y	-	-	-	-	(B-J, B9.21) PPR-10
13-O-11	R-A	R1.20	ELBOW TO PIPE	-	Y	-	-	-	-	(B-J, B9.21) PPR-10
13-O-12	R-A	R1.20	PIPE TO ELBOW	-	Y	-	-	-	-	(B-J, B9.21) PPR-10
13-O-13	R-A	R1.20	ELBOW TO PIPE	-	Y	-	-	-	-	(B-J, B9.21) PPR-10
13-O-15	R-A	R1.20	ELBOW TO PIPE	-	Y	-	-	-	-	(B-J, B9.21) PPR-10
13-O-16	R-A	R1.20	PIPE TO ELBOW	-	Y	-	-	-	-	(B-J, B9.21) PPR-10
13-O-17	R-A	R1.20	ELBOW TO PIPE	-	Y	-	-	-	-	(B-J, B9.21) PPR-10, I2P2
13-O-18	R-A	R1.20	PIPE TO PIPE	-	Y	-	2	-	-	RI-ISI; (B-J, B9.21); PPR-10; I2P2, I3P2
13-O-19	R-A	R1.20	PIPE TO VALVE	-	Y	-	2	-	-	RI-ISI; (B-J, B9.21); PPR-10; I2P3, I3P2
H-13-1-SS16	N/A	N/A	SNUBBER	-	-	-	-	-	-	I2P1
13-VB-1301-16	B-G-2	B7.70	VALVE BOLTING	-	Y	-	2	-	-	PPR-14, I2P2, I3P2
13-VB-1301-17	B-G-2	B7.70	VALVE BOLTING	-	Y	-	-	3	-	PRR-14, I2P2, I3P3
H-13-1-X53	F-A	F1.10-B	ANCHOR	-	-	-	-	-	-	I2P1, I3P2

COMPONENT IDENTIFICATION	ASME CODE CAT	ASME CODE ITEM	DESCRIPTION	ASME CODE EXAM	REL REQ	4TH ISI INTERVAL PER1	PER2	PER3	WELD LTH OR THICK	REMARKS
RCIC Drawing Number: ISI-I-13-1 Line Number: 3-EB-13										
13-O-7	R-A	R1.20	ELBOW TO PIPE	-	Y	-	-	-	-	(B-J, B9.21) PPR-10
13-O-8	R-A	R1.20	PIPE TO ELBOW	-	Y	-	-	-	-	(B-J, B9.21) PPR-10
13-O-9	R-A	R1.20	ELBOW TO PIPE	-	Y	-	-	-	-	(B-J, B9.21) PPR-10
13-O-9PS	B-K-1	B10.10	PIPE STANCHION	-	-	-	-	-	-	H-13-1-49
13-O-14	R-A	R1.20	PIPE TO ELBOW	-	Y	-	-	-	-	(B-J, B9.21) PPR-10
13-O-11HL1(8)	B-K-1	B10.10	SUPPORT LUGS	-	-	-	-	-	-	I2P2, H-13-1-50
H-13-1-SS15	N/A	N/A	SNUBBER	-	-	-	-	-	-	I2P1
H-13-1-12SA	F-A	F1.10-B	ANCHOR	-	-	-	-	-	-	I2P2, exempt for line size
H-13-1-49	F-A	F1.10-C	SPRING HANGER	-	Y	-	2	-	-	I2P2, I3P2, 13-0-9PS
H-13-1-50	F-A	F1.10-C	SPRING HANGER	-	-	-	-	-	-	I2P2, 13-0-11HL1(8)

COMPONENT IDENTIFICATION	ASME CODE CAT	ASME CODE ITEM	DESCRIPTION	ASME CODE EXAM	REL REQ	4TH ISI INTERVAL PER1	PER2	PER3	WELD LTH OR THICK	REMARKS
RCIC Drawing Number: ISI-I-13-1 Line Number: 4-DB-13										
13-I-3	R-A	R1.20	PIPE TO VALVE	-	Y	-	-	-	-	(B-J, B9.11) PRR-10, I2P1
13-I-3A	R-A	R1.20	PIPE TO PIPE	-	Y	-	-	-	-	(B-J, B9.11) PRR-10
13-I-4	R-A	R1.20	ELBOW TO PIPE	-	Y	-	-	-	-	(B-J, B9.11) PRR-10
13-I-5	R-A	R1.20	PIPE TO ELBOW	-	Y	-	-	-	-	(B-J, B9.11) PRR-10
13-I-7	R-A	R1.20	ELBOW TO PIPE	-	Y	-	-	-	-	(B-J, B9.11) PRR-10, I2P1
13-I-8	R-A	R1.20	PIPE TO ELBOW	-	Y	-	-	-	-	(B-J, B9.11) PRR-10
13-I-9	R-A	R1.20	ELBOW TO PIPE	-	Y	-	-	-	-	(B-J, B9.11) PRR-10
13-I-10	R-A	R1.20	PIPE TO ELBOW	-	Y	-	-	-	-	(B-J, B9.11) PRR-10
13-I-12	R-A	R1.20	ELBOW TO PIPE	-	Y	-	-	-	-	(B-J, B9.11) PRR-10
13-I-11	R-A	R1.20	PIPE TO PIPE	-	Y	-	-	-	-	(B-J, B9.11) PRR-10
13-I-13	R-A	R1.20	PIPE TO ELBOW	-	Y	-	-	-	-	(B-J, B9.11) PRR-10
13-I-14	R-A	R1.20	ELBOW TO PIPE	-	Y	-	-	-	-	(B-J, B9.11) PRR-10
13-I-15	R-A	R1.20	PIPE TO ELBOW	-	Y	-	-	-	-	(B-J, B9.11) PRR-10
13-I-16	R-A	R1.20	VALVE TO PIPE	-	Y	-	-	3	-	RI-ISI; (B-J, B9.11); PPR-10; I2P3, I3P3
13-VB-1301-49	B-G-2	B7.70	VALVE BOLTING	-	Y	-	2	-	-	PRR-14, I2P1, I3P2
13-VB-1301-50	B-G-2	B7.70	VALVE BOLTING	-	Y	-	2	-	-	PRR-14, I2P1, I3P2
H-13-1-43	F-A	F1.10-B	RESTRAINT	-	-	-	2	-	-	I2P2, I3P2, H-13-43HL
H-13-1-44	F-A	F1.10-C	SPRING HANGER	-	-	-	-	-	-	I2P2
H-13-1-48	F-A	F1.10-C	SPRING HANGER	-	-	-	-	-	-	I2P2

COMPONENT IDENTIFICATION	ASME CODE CAT	ASME CODE ITEM	DESCRIPTION	ASME CODE EXAM	REL REQ	4TH ISI INTERVAL PER1	PER2	PER3	WELD LTH OR THICK	REMARKS
RCIC										
Drawing Number: ISI-I-13-1										
Line Number: 4-DB-13										
H-13-1-42	F-A	F1.10-B	ANCHOR	-	-	-	-	-	-	I2P2, in class 2 boundary
H-13-1-8SH	F-A	F1.10-A	RIGID HANGER	-	-	-	-	-	-	I2P1
H-13-1-7SS	F-A	F1.10-A	RIGID HANGER	-	-	-	2	-	-	I2P2, I3P2
H-13-1-6SH	F-A	F1.10-A	RIGID HANGER	-	-	-	-	-	-	I2P2
13-I-6	R-A	R1.20	PIPE TO PIPE	-	Y	-	-	-	-	(B-J, B9.11) PRR-10
H-13-43HL	**B-K**	**B10.20**	**HANGER LUG**	-	-	-	-	-	-	H-13-1-43
Line Number: 4-DL-6										
13-I-1	R-A	R1.20	PIPE TO TEE	-	Y	-	-	-	-	(B-J, B9.11) PRR-10
13-I-2	R-A	R1.20	VALVE TO PIPE	-	Y	-	-	-	-	(B-J, B9.11) PRR-10

COMPONENT IDENTIFICATION	ASME CODE CAT	ASME CODE ITEM	DESCRIPTION	ASME CODE EXAM	REL REQ	4TH ISI INTERVAL PER1	PER2	PER3	WELD LTH OR THICK	REMARKS
RCIC										
Drawing Number: ISI-I-13-2										
Line Number: N/A										
H-13-1-P206	F-A	F1.40	PUMP SUPPORT	-	-	-	-	-	-	-

COMPONENT IDENTIFICATION	ASME CODE CAT	ASME CODE ITEM	DESCRIPTION	ASME CODE EXAM	REL REQ	4TH ISI INTERVAL PER1	PER2	PER3	WELD LTH OR THICK	REMARKS
RCIC Drawing Number: ISI-I-13-2 Line Number: 6-HD-13										
HD-13-34PS1	C-C	C3.20	PIPE STANCHION	-	-	-	-	-	-	H-13-1-1SG
HD-13-F34	C-F-2	C5.51	VALVE TO PIPE	-	Y	-	-	-	-	PRR-8
HD-13-F35	C-F-2	C5.51	PIPE TO VALVE	-	Y	-	-	3	-	PRR-8, I2P3, I3P3
HD-13-F36	C-F-2	C5.51	VALVE TO PIPE	-	Y	-	-	-	-	PRR-8
HD-13-F37	C-F-2	C5.51	PIPE TO VALVE	-	Y	-	-	-	-	PRR-8
HD-13-F38	C-F-2	C5.51	VALVE TO PIPE	-	Y	-	-	-	-	PRR-8, I2P1
HD-13-F41	C-F-2	C5.51	FLANGE TO PUMP	-	Y	-	-	-	-	PRR-8, I2P1
HD-13-1-3B	C-F-2	C5.51	PIPE TO ELBOW	-	Y	-	-	-	-	PRR-8
HD-13-1-3C	C-F-2	C5.51	ELBOW TO PIPE	-	Y	-	-	-	-	PRR-8
HD-13-1-3D	C-F-2	C5.51	PIPE TO TEE	-	Y	1	-	-	-	PRR-8, I2P1, I3P1
HD-13-1-3F	C-F-2	C5.51	PIPE TO TEE	-	Y	-	-	-	-	PRR-8, I2P1
HD-13-1-4B	C-F-2	C5.51	PIPE TO ELBOW	-	Y	-	-	-	-	PRR-8
HD-13-1-4C	C-F-2	C5.51	ELBOW TO PIPE	-	Y	-	-	-	-	PRR-8
HD-13-1-4G	C-F-2	C5.51	PIPE TO FLANGE	-	Y	-	-	-	-	PRR-8
HD-13-1-5B	C-F-2	C5.51	FLANGE TO PIPE	-	Y	-	-	-	-	PRR-8
HD-13-1-5C	C-F-2	C5.51	PIPE TO FLANGE	-	Y	-	-	-	-	PRR-8
HD-13-40PS1	C-C	C3.20	PIPE STANCHION	-	-	-	-	-	-	H-13-1-2SR, abandoned in place
HD-13-38PS1	C-C	C3.20	PIPE STANCHION	-	-	-	-	-	-	H-13-1-27
HD-13-36PS1	C-C	C3.20	PIPE STANCHION	-	-	-	-	-	-	H-13-1-26

COMPONENT IDENTIFICATION	ASME CODE CAT	ASME CODE ITEM	DESCRIPTION	ASME CODE EXAM	REL REQ	4TH ISI INTERVAL PER1	PER2	PER3	WELD LTH OR THICK	REMARKS
RCIC Drawing Number: ISI-I-13-2 Line Number: 6-HD-13										
H-13-1-1SG	F-A	F1.20-B	GUIDE	-	-	-	-	-	-	I2P1, HD-13-34PS1
H-13-1-2SR	F-A	F1.20-B	LATERAL RESTRAINT	-	-	-	-	-	-	I2P2, HD-13-40PS1
H-13-1-25	F-A	F1.20-B	RIGID SUPPORT	-	-	-	-	-	-	I2P2
H-13-1-26	F-A	F1.20-B	RIGID SUPPORT	-	-	-	-	-	-	I2P2, HD-13-36PS1
H-13-1-27	F-A	F1.20-B	RIGID SUPPORT	-	-	-	2	-	-	I2P2, I3P2, HD-13-38PS1
H-13-1-28	F-A	F1.20-C	SPRING HANGER	-	-	-	-	-	-	I2P2
HD-13-F39	C-F-2	C5.51	TEE TO VALVE	-	Y	-	-	-	-	PRR-8, I2P1
HD-13-F40	C-F-2	C5.51	VALVE TO PIPE	-	Y	-	-	-	-	PRR-8
HD-13-F42	C-F-2	C5.51	VALVE TO PIPE	-	Y	-	-	-	-	PRR-8

COMPONENT IDENTIFICATION	ASME CODE CAT	ASME CODE ITEM	DESCRIPTION	ASME CODE EXAM	REL REQ	4TH ISI INTERVAL PER1	PER2	PER3	WELD LTH OR THICK	REMARKS
RCIC Drawing Number: ISI-I-13-2 Line Number: 6-HL-13										
H-13-1-1	F-A	F1.20-B	RIGID SUPPORT	-	-	-	-	-	-	I2P1, HL-13-27PS1
H-13-1-2	F-A	F1.20-B	RIGID SUPPORT	-	-	-	-	-	-	I2P1, HL-13-27PS2
HL-13-F27	C-F-2	C5.51	NOZZLE TO PIPE	-	Y	-	-	-	-	PRR-8, I2P2
HL-13-27PS2	C-C	C3.20	PIPE STANCHION	-	-	-	-	-	-	H-13-1-2
HL-13-27PS1	C-C	C3.20	PIPE STANCHION	-	-	-	-	-	-	H-13-1-1
HL-13-F28	C-F-2	C5.51	PIPE TO ELBOW	-	Y	-	-	-	-	PRR-8
HL-13-F29	C-F-2	C5.51	ELBOW TO VALVE	-	Y	-	-	-	-	PRR-8
HL-13-1-1B	C-F-2	C5.51	PIPE TO ELBOW	-	Y	-	-	-	-	PRR-8
HL-13-1-1C	C-F-2	C5.51	ELBOW TO PIPE	-	Y	-	-	-	-	PRR-8
HL-13-1-1D	C-F-2	C5.51	PIPE TO ELBOW	-	Y	-	-	-	-	PRR-8
HL-13-1-1E	C-F-2	C5.51	ELBOW TO PIPE	-	Y	-	-	-	-	PRR-8
HL-13-1-1F	C-F-2	C5.51	PIPE TO FLANGE	-	Y	-	-	-	-	PRR-8
HL-13-1-2B	C-F-2	C5.51	FLANGE TO PIPE	-	Y	-	-	-	-	PRR-8

COMPONENT IDENTIFICATION	ASME CODE CAT	ASME CODE ITEM	DESCRIPTION	ASME CODE EXAM	REL REQ	4TH ISI INTERVAL PER1	PER2	PER3	WELD LTH OR THICK	REMARKS
RCIC **Drawing Number: ISI-I-13-3** **Line Number: 8-HB-13**										
H-13-1-29	F-A	F1.20-A	RIGID HANGER	-	-	-	-	-	-	I2P2, HB-13-F-HL1(2)
HB-13-F-HL1(2)	C-C	C3.20	HANGER LUGS	-	-	-	2	-	-	I2P2, I3P2, H-13-1-29
HB-13-F30	N/A	N/A	ELBOW TO PIPE	-	-	-	-	-	-	I2P3
HB-13-F668	C-F-2	C5.51	VALVE TO VALVE	-	Y	-	-	-	-	PRR-8
HB-13-F664	C-F-2	C5.51	PIPE TO PIPE	-	Y	-	-	-	-	PRR-8
HB-13-F45	C-F-2	C5.51	PIPE TO FLANGE	-	Y	-	-	-	-	PRR-8
HB-13-F44	C-F-2	C5.51	VALVE TO PIPE	-	Y	-	-	-	-	PRR-8
HB-13-F43	C-F-2	C5.51	PIPE TO VALVE	-	Y	-	-	-	-	PRR-8
HB-13-2-1H	C-F-2	C5.51	TEE TO PIPE	-	Y	-	-	-	-	PRR-8
HB-13-2-1G	C-F-2	C5.51	TEE TO FLANGE	-	Y	-	-	-	-	PRR-8, I2P3
HB-13-2-1E	C-F-2	C5.51	TEE TO PIPE	-	Y	-	-	-	-	PRR-8
HB-13-2-1D	C-F-2	C5.51	PIPE TO CAP	-	Y	-	-	-	-	PRR-8
HB-13-2-1C	C-F-2	C5.51	TEE TO PIPE	-	Y	-	-	-	-	PRR-8, I2P3
HB-13-2-3B	N/A	N/A	FLANGE TO ELBOW	-	-	-	-	-	-	-
HB-13-2-4A	N/A	N/A	PIPE TO ELBOW	-	-	-	-	-	-	-
HB-13-2-3G	N/A	N/A	PIPE TO FLANGE	-	-	-	-	-	-	-
HB-13-2-3E	N/A	N/A	ELBOW TO PIPE	-	-	-	-	-	-	-
HB-13-2-1F	C-F-2	C5.51	PIPE TO TEE	-	Y	-	-	-	-	PRR-8
HB-13-2-3C	N/A	N/A	ELBOW TO PIPE	-	-	-	-	-	-	-

COMPONENT IDENTIFICATION	ASME CODE CAT	ASME CODE ITEM	DESCRIPTION	ASME CODE EXAM	REL REQ	4TH ISI INTERVAL PER1	PER2	PER3	WELD LTH OR THICK	REMARKS
RCIC										
Drawing Number: ISI-I-13-3										
Line Number: 8-HB-13										
H-13-1-31	N/A	N/A	RIGID HANGER	-	-	-	-	-	-	I2P3
HB-13-2-1A	C-F-2	C5.51	FLANGE TO ELBOW	-	Y	-	-	3	-	PRR-8, I2P3, I3P3
HB-13-2-1B	C-F-2	C5.51	ELBOW TO TEE	-	Y	-	-	-	-	PRR-8
HB-13-2-3D	N/A	N/A	PIPE TO ELBOW	-	-	-	-	-	-	-
Line Number: 8-HL-13										
HL-13-33A1	C-C	C3.20	ANCHOR TO PIPE	-	-	-	-	-	-	H-13-1-3SA
HL-13-667HL1(8)	C-C	C3.20	HANGER LUGS	-	-	-	-	-	-	H-13-1-61SS
HL-13-2-4B	C-F-2	C5.51	PIPE TO ELBOW	-	Y	-	-	-	-	PRR-8
HL-13-74PS1	C-C	C3.20	PIPE STANCHION	-	-	-	-	-	-	H-13-1-30
HL-13-2-1C	C-F-2	C5.51	ELBOW TO PIPE	-	Y	-	-	-	-	PRR-8
HL-13-F661	C-F-2	C5.51	PIPE TO ELBOW	-	Y	-	2	-	-	PRR-8, I2P2, I3P2
HL-13-2-2D	C-F-2	C5.51	PIPE TO ELBOW	-	Y	-	-	-	-	PRR-8
HL-13-2-3C	C-F-2	C5.51	ELBOW TO PIPE	-	Y	-	2	-	-	PRR-8, I2P2, I3P2
HL-13-2-3D	C-F-2	C5.51	PIPE TO ELBOW	-	Y	-	-	-	-	PRR-8
HL-13-F671	C-F-2	C5.51	ELBOW TO FLANGE	-	Y	-	-	-	-	PRR-8
H-13-1-61SS	N/A	N/A	DOUBLE SNUBBER	-	-	-	-	-	-	I2P1, HL-13-667HL1(8)
H-13-1-6	F-A	F1.20-C	SPRING HANGER	-	-	-	-	-	-	I2P1
H-13-1-33	F-A	F1.20-C	SPRING HANGER	-	-	-	-	-	-	I2P2

COMPONENT IDENTIFICATION	ASME CODE CAT	ASME CODE ITEM	DESCRIPTION	ASME CODE EXAM	REL REQ	4TH ISI INTERVAL PER1	PER2	PER3	WELD LTH OR THICK	REMARKS
RCIC Drawing Number: ISI-I-13-3 Line Number: 8-HL-13										
H-13-1-32	F-A	F1.20-C	SPRING HANGER	-	-	1	-	-	-	I2P1, I3P1
H-13-1-7	F-A	F1.20-B	GUIDE	-	-	-	-	-	-	I2P1
H-13-1-3SA	F-A	F1.20-B	ANCHOR	-	-	-	-	-	-	I2P3, HL-13-33A1
H-13-1-30	F-A	F1.20-B	RIGID SUPPORT	-	-	1	-	-	-	I2P1, I3P1, HL-13-74PS1
HL-13-F74	C-F-2	C5.51	PIPE TO PIPE	-	Y	-	-	-	-	PRR-8
HL-13-F33	C-F-2	C5.51	PIPE TO PIPE	-	Y	-	-	-	-	PRR-8, I2P3
HL-13-2-4C	C-F-2	C5.51	ELBOW TO PIPE	-	Y	-	-	-	-	PRR-8
HL-13-F662	C-F-2	C5.51	PIPE TO FLANGE	-	Y	-	-	-	-	PRR-8
HL-13-F663	C-F-2	C5.51	FLANGE TO ELBOW	-	Y	-	-	-	-	PRR-8
HL-13-F665	C-F-2	C5.51	FLANGE TO PIPE	-	Y	-	-	-	-	PRR-8, I2P2
HL-13-F666	C-F-2	C5.51	PIPE TO ELBOW	-	Y	-	-	-	-	PRR-8
HL-13-F667	C-F-2	C5.51	ELBOW TO NOZZLE	-	Y	-	-	-	-	PRR-8, I2P2
HL-13-F669	C-F-2	C5.51	ELBOW TO PIPE	-	Y	-	-	-	-	PRR-24
HL-13-F677	C-F-2	C5.51	FLANGE TO PIPE	-	Y	-	-	-	-	PRR-8
HL-13-F47	C-F-2	C5.51	PIPE TO ELBOW	-	Y	-	-	-	-	PRR-8
HL-13-2-4E	C-F-2	C5.51	ELBOW TO PIPE	-	Y	-	-	-	-	PRR-8
HL-13-2-4D	C-F-2	C5.51	PIPE TO ELBOW	-	Y	-	-	-	-	PRR-8
HL-13-F73	C-F-2	C5.51	PIPE TO ELBOW	-	Y	-	-	-	-	PRR-8, I2P2

COMPONENT IDENTIFICATION	ASME CODE CAT	ASME CODE ITEM	DESCRIPTION	ASME CODE EXAM	REL REQ	4TH ISI INTERVAL PER1	PER2	PER3	WELD LTH OR THICK	REMARKS
RCIC Drawing Number: ISI-I-13-4 Line Number: 6-HE-26										
HE-26-100A	C-C	C3.20	LUGS	-	-	-	-	-	-	H-26-1-1322SP
HE-26-1-1A	C-F-2	C5.51	ELBOW TO PIPE	-	Y	-	-	-	-	PRR-8
HE-26-1-2A	C-F-2	C5.51	PIPE TO BEND	-	Y	-	-	-	-	PRR-8
HE-26-1-2B	C-F-2	C5.51	BEND TO PIPE	-	Y	-	-	-	-	PRR-8
HE-26-1-2C	C-F-2	C5.51	PIPE TO ELBOW	-	Y	-	-	-	-	PRR-8
HE-26-F246	C-F-2	C5.51	PIPE TO ELBOW	-	Y	-	-	-	-	PRR-8
HE-26-F247	C-F-2	C5.51	ELBOW TO PIPE	-	Y	-	-	-	-	PRR-8
HE-26-F248	C-F-2	C5.51	PIPE TO ELBOW	-	Y	-	-	-	-	PRR-8, I2P3
HE-26-F32	C-F-2	C5.51	ELBOW TO PIPE	-	Y	-	-	-	-	PRR-8, I2P3
HE-26-F33	C-F-2	C5.51	PIPE TO PIPE	-	Y	-	-	-	-	PRR-8
HE-26-F34	C-F-2	C5.51	PIPE TO ELBOW	-	Y	-	-	-	-	PRR-8, I2P3
HE-26-F42A	C-F-2	C5.51	ELBOW TO VALVE	-	Y	-	-	3	-	PRR-8, I2P3, I3P3
H-26-1-1	F-A	F1.20-B	RIGID HANGER	-	-	-	-	-	-	I2P3
H-26-1-2	F-A	F1.20-B	GUIDE	-	-	-	-	-	-	I2P3
H-26-1-3	F-A	F1.20-A	RIGID HANGER	-	-	-	-	-	-	I2P3
H-26-1-4	F-A	F1.20-B	GUIDE	-	-	-	-	-	-	I2P3
H-26-1-5	F-A	F1.20-B	GUIDE	-	-	-	-	-	-	I2P3
H-26-1-6	F-A	F1.20-B	GUIDE	-	-	-	-	-	-	I2P3
H-26-1-1322SP	F-A	F1.20-B	ANCHOR	-	-	-	-	-	-	I2P3, HE-26-100A

COMPONENT IDENTIFICATION	ASME CODE CAT	ASME CODE ITEM	DESCRIPTION	ASME CODE EXAM	REL REQ	4TH ISI INTERVAL PER1	PER2	PER3	WELD LTH OR THICK	REMARKS
RCIC Drawing Number: ISI-I-13-5 Line Number: 6-HE-26										
HE-26-5-3B	C-F-2	C5.51	PIPE TO ELBOW	-	Y	-	-	-	-	PRR-8
HE-26-110PS	C-C	C3.20	LUGS	-	-	-	-	-	-	H-26-1-1SR
HE-26-5-1A	C-F-2	C5.51	PIPE TO PIPE	-	Y	-	-	-	-	PRR-8
HE-26-25-2A	C-F-2	C5.51	ELBOW TO ELBOW	-	Y	-	-	-	-	PRR-8
HE-26-5-4A	C-F-2	C5.51	ELBOW TO PIPE	-	Y	-	-	-	-	PRR-8
HE-26-5-4B	C-F-2	C5.51	PIPE TO ELBOW	-	Y	-	-	-	-	PRR-8
HE-26-5-4C	C-F-2	C5.51	ELBOW TO PIPE	-	Y	1	-	-	-	PRR-8
HE-26-5-4D	C-F-2	C5.51	PIPE TO ELBOW	-	Y	-	-	-	-	PRR-8
HE-26-5-4E	C-F-2	C5.51	ELBOW TO PIPE	-	Y	-	-	-	-	PRR-8
HE-26-5-5B	C-F-2	C5.51	PIPE TO ELBOW	-	Y	-	-	-	-	PRR-8
HE-26-5-3A	C-F-2	C5.51	ELBOW TO PIPE	-	Y	-	-	-	-	PRR-8
HE-26-5-3C	C-F-2	C5.51	ELBOW TO PIPE	-	Y	-	-	-	-	PRR-8
HE-26-5-5C	C-F-2	C5.51	PIPE TO PIPE	-	Y	-	-	-	-	PRR-8, I2P3
HE-26-25-2B	C-F-2	C5.51	ELBOW TO PIPE	-	Y	-	-	-	-	PRR-8
HE-26-130HL(4)	C-C	C3.20	LUGS	-	-	-	-	3	-	I3P3, H-26-1-194
HE-26-120HL(4)	C-C	C3.20	LUGS	-	-	-	-	-	-	H-26-1-2SG
H-26-1-1SR	F-A	F1.20-B	LATERAL RESTRAINT	-	-	-	-	-	-	I2P3, HE-26-110PS
H-26-1-194	F-A	F1.20-B	RIGID SUPPORT	-	-	-	-	3	-	I2P3, I3P3, HE-26-130HL(4)

COMPONENT IDENTIFICATION	ASME CODE CAT	ASME CODE ITEM	DESCRIPTION	ASME CODE EXAM	REL REQ	4TH ISI INTERVAL PER1	PER2	PER3	WELD LTH OR THICK	REMARKS
RCIC Drawing Number: ISI-I-13-5 Line Number: 6-HE-26										
H-26-1-54	F-A	F1.20-A	RIGID HANGER	-	-	-	-	-	-	I2P3
H-26-1-55	F-A	F1.20-A	RIGID HANGER	-	-	-	-	-	-	I2P3
H-26-1-56	F-A	F1.20-A	RIGID HANGER	-	-	-	-	3	-	I2P3, I3P3
HE-26-5-5A	C-F-2	C5.51	ELBOW TO PIPE	-	Y	-	-	-	-	PRR-8
H-26-1-2SG	F-A	F1.20-B	GUIDE	-	-	-	-	-	-	I2P3, HE-26-120HL(4)
HE-26-F35	C-F-2	C5.51	PIPE TO ELBOW	-	Y	-	-	-	-	PRR-8
HE-26-F36	C-F-2	C5.51	PIPE TO ELBOW	-	Y	-	-	-	-	PRR-8
HE-26-F37	C-F-2	C5.51	PIPE TO ELBOW	-	Y	-	-	-	-	PRR-8
HE-26-F238	C-F-2	C5.51	VALVE TO PIPE	-	Y	-	-	-	-	PRR-8, I2P3, I3P3
HE-26-F170	C-F-2	C5.51	PIPE TO ELBOW	-	Y	-	-	-	-	PRR-8, I2P3, I3P3

COMPONENT IDENTIFICATION	ASME CODE CAT	ASME CODE ITEM	DESCRIPTION	ASME CODE EXAM	REL REQ	4TH ISI INTERVAL PER1	PER2	PER3	WELD LTH OR THICK	REMARKS
RCIC										
Drawing Number: VARIOUS										
Line Number: VARIOUS										
SLT RCIC-1	C-H	C7.10	PRESSURE BOUNDARY	VT-2	-	1	2	3	-	-
SLT RCIC-2	C-H	C7.10	PRESSURE BOUNDARY	VT-2	-	1	2	3	-	-
SLT RCIC-3	C-H	C7.10	PRESSURE BOUNDARY	VT-2	-	1	2	3	-	-
SLT RCIC-4	C-H	C7.10	PRESSURE BOUNDARY	VT-2	-	1	2	3	-	-
SLT RCIC-5	C-H	C7.10	PRESSURE BOUNDARY	VT-2	-	1	2	3	-	-

COMPONENT IDENTIFICATION	ASME CODE CAT	ASME CODE ITEM	DESCRIPTION	ASME CODE EXAM	REL REQ	4TH ISI INTERVAL PER1	PER2	PER3	IGSCC CAT.	REMARKS
RECIRC										
Drawing Number: ISI-I-2R-A										
Line Number: N/A										
2-PI-201A	B-L-2	B12.20	PUMP INTERNALS	-	-	-	-	-	-	-
Line Number: 12-DCA-2										
2R-N2A-2	R-A	R1.20	PIPE TO SAFE END	-	Y	1	-	-	A	RI-ISI; IGSCC; (B-J, B9.11); PRR-10; I3P1
2R-N2A-2LU	N/A	N/A	LONG SEAM	-	Y	-	-	-	-	(B-J, B9.12); PRR-10
2R-N2A-3	R-A	R1.20	COMPOUND BEND TO PIPE	-	Y	-	-	-	A	IGSCC; (B-J, B9.11); PRR-10; I2P3
2R-N2A-3LU	N/A	N/A	LONG SEAM	-	Y	-	-	-	-	(B-J, B9.12); PRR-10
2R-N2B-2	R-A	R1.20	PIPE TO SAFE END	-	Y	1	-	-	A	RI-ISI; IGSCC; (B-J, B9.11); PRR-10; I3P1
2R-N2B-2LU	N/A	N/A	LONG SEAM	-	Y	-	-	-	-	(B-J, B9.12); PRR-10
2R-N2B-3	R-A	R1.20	HEADER TO PIPE	-	Y	-	-	-	A	IGSCC; (B-J, B9.11); PRR-10; I2P3
2R-N2B-3LD	N/A	N/A	LONG SEAM	-	Y	-	-	-	-	(B-J, B9.12); PRR-10
2R-N2C-2	R-A	R1.20	PIPE TO SAFE END	-	Y	-	-	-	A	IGSCC; (B-J, B9.11); PRR-10
2R-N2C-2LU	N/A	N/A	LONG SEAM	-	Y	-	-	-	-	(B-J, B9.12); PRR-10
2R-N2C-3LD	N/A	N/A	LONG SEAM	-	Y	-	-	-	-	(B-J, B9.12); PRR-10
2R-N2C-3LU	N/A	N/A	LONG SEAM	-	Y	-	-	-	-	(B-J, B9.12); PRR-10
2R-N2D-3LD	N/A	N/A	LONG SEAM	-	Y	-	-	-	-	(B-J, B9.12); PRR-10
2R-N2D-2LU	N/A	N/A	LONG SEAM	-	Y	-	-	-	-	(B-J, B9.12); PRR-10
2R-N2E-3LD	N/A	N/A	LONG SEAM	-	Y	-	-	-	-	(B-J, B9.12); PRR-10
2R-N2E-2LU	N/A	N/A	LONG SEAM	-	Y	-	-	-	-	(B-J, B9.12); PRR-10
2R-N2E-3LU	N/A	N/A	LONG SEAM	-	Y	-	-	-	-	(B-J, B9.12); PRR-10

COMPONENT IDENTIFICATION	ASME CODE CAT	ASME CODE ITEM	DESCRIPTION	ASME CODE EXAM	REL REQ	4TH ISI INTERVAL PER1	PER2	PER3	IGSCC CAT.	REMARKS
RECIRC **Drawing Number: ISI-I-2R-A** **Line Number: 12-DCA-2**										
2R-N2C-3	R-A	R1.20	CROSS TO PIPE	-	Y	-	-	-	A	IGSCC; (B-J, B9.11); PRR-10; I2P2
2R-N2D-2	R-A	R1.20	PIPE TO SAFE END	-	Y	-	-	-	A	IGSCC; (B-J, B9.11); PRR-10
2R-N2D-3	R-A	R1.20	HEADER TO PIPE	-	Y	-	-	-	A	IGSCC; (B-J, B9.11); PRR-10; I2P3
2R-N2E-2	R-A	R1.20	PIPE TO SAFE END	-	Y	-	-	-	A	IGSCC; (B-J, B9.11); PRR-10; I2P3
2R-N2E-3	R-A	R1.20	COMPOUND BEND TO PIPE	-	Y	-	-	-	A	IGSCC; (B-J, B9.11); PRR-10
2R-HA-1LD	N/A	N/A	LONG SEAM	-	Y	-	-	-	-	(B-J, B9.12); PRR-10
2R-HA-1LU	N/A	N/A	LONG SEAM	-	Y	-	-	-	-	(B-J, B9.12); PRR-10
2R-HA-4LD	N/A	N/A	LONG SEAM	-	Y	-	-	-	-	(B-J, B9.12); PRR-10
2R-HA-4LU	N/A	N/A	LONG SEAM	-	Y	-	-	-	-	(B-J, B9.12); PRR-10
2R-N2A-3LD	N/A	N/A	LONG SEAM	-	Y	-	-	-	-	(B-J, B9.12); PRR-10
H-2-1-H3	F-A	F1.10-C	SPRING HANGER	-	-	-	-	-	-	I2P1
H-2-1-SS2	N/A	N/A	SNUBBER	-	-	-	2	-	-	I2P1, I3P2, Clamp
2R-HA-1	R-A	R1.20	HEADER TO BEND	-	Y	-	-	3	A	RI-ISI; IGSCC; (B-J, B9.11); PRR-10; I2P3, I3P3
2R-HA-4	R-A	R1.20	HEADER TO BEND	-	Y	-	-	3	A	RI-ISI; IGSCC; (B-J, B9.11); PRR-10; I2P3, I3P3
H-2-1-H1	F-A	F1.10-C	SPRING HANGER	-	-	1	-	-	-	I2P1, I3P1

COMPONENT IDENTIFICATION	ASME CODE CAT	ASME CODE ITEM	DESCRIPTION	ASME CODE EXAM	REL REQ	4TH ISI INTERVAL PER1	PER2	PER3	IGSCC CAT.	REMARKS
RECIRC										
Drawing Number: ISI-I-2R-A										
Line Number: 2-DCA-2										
2R-N1B-9BC-2	R-A	R1.20	BR CONN TO ELBOW	-	Y	-	-	-	-	(B-J, B9.32) PRR-10, I2P3
2-VB-63A	B-G-2	B7.70	VALVE BOLTING	-	Y	-	-	3	-	PRR-14, I2P3, I3P3
2-VB-64A	B-G-2	B7.70	VALVE BOLTING	-	Y	-	-	-	-	PRR-14, I2P3
2R-N1B-9BC-5	R-A	R1.20	PIPE TO VALVE	-	Y	-	-	-	-	(B-J, B9.40) PRR-10
H-2-1-G1	F-A	F1.10-B	GUIDE	-	-	-	2	-	-	I2P1, I3P2
2R-N1B-9BC-3	R-A	R1.20	PIPE TO VALVE	-	Y	-	-	-	-	(B-J, B9.40) PRR-10, I2P2
2R-N1B-9BC-2A	R-A	R1.20	BR CONN TO PIPE	-	Y	-	-	-	-	(B-J, B9.40) PRR-10
2R-N1B-9BC-4	R-A	R1.20	VALVE TO PIPE	-	Y	-	-	-	-	(B-J, B9.40) PRR-10
Line Number: 22-DCA-2										
2R-HA-2	R-A	R1.20	CROSS TO HEADER	-	Y	-	-	-	A	IGSCC; (B-J, B9.11) PRR-10
2R-HA-3	R-A	R1.20	CROSS TO HEADER	-	Y	-	-	-	A	IGSCC; (B-J, B9.11) PRR-10
2R-HA-2LD	N/A	N/A	LONG SEAM	-	Y	-	-	-	-	(B-J, B9.12) PRR-10
2R-HA-3LD	N/A	N/A	LONG SEAM	-	Y	-	-	-	-	(B-J, B9.12) PRR-10
H-2-1-SS3	N/A	N/A	SNUBBER	-	-	-	-	3		I2P1, I3P3, Clamp

COMPONENT IDENTIFICATION	ASME CODE CAT	ASME CODE ITEM	DESCRIPTION	ASME CODE EXAM	REL REQ	4TH ISI INTERVAL PER1	PER2	PER3	IGSCC CAT.	REMARKS
RECIRC Drawing Number: ISI-I-2R-A Line Number: 28-DCA-2										
2-VB-202-5A	B-G-2	B7.70	VALVE BOLTING	-	Y	-	-	3	-	PRR-14, I2P3, I3P3
2R-N1B-13BLD	N/A	N/A	LONG SEAM	-	Y	-	-	-	-	(B-J, B9.12) PRR-10
2R-N1B-13ALD	N/A	N/A	LONG SEAM	-	Y	-	-	-	-	(B-J, B9.12) PRR-10
2R-N1B-12LU	N/A	N/A	LONG SEAM	-	Y	-	-	-	-	(B-J, B9.12) PRR-10
2R-N1B-11LD	N/A	N/A	LONG SEAM	-	Y	-	-	-	-	(B-J, B9.12) PRR-10
2R-N1B-10BLU	N/A	N/A	LONG SEAM	-	Y	-	-	-	-	(B-J, B9.12) PRR-10
2R-N1B-10ALU	N/A	N/A	LONG SEAM	-	Y	-	-	-	-	(B-J, B9.12) PRR-10
2-FS-201A	B-G-1	B6.190	PUMP FLANGE SURFACE	-	-	1	-	-	-	I2P1, I3P1
2-PN-201A	B-G-1	B6.200	PUMP NUTS	-	-	-	-	-	-	I2P1
2R-N1B-5LD	N/A	N/A	LONG SEAM	-	Y	-	-	-	-	(B-J, B9.12) PRR-10
2-VB-202-4A	B-G-2	B7.70	VALVE BOLTING	-	Y	1	-	-	-	PRR-14, I2P1, I3P1
2R-N1B-3	R-A	R1.20	ELBOW TO PIPE	-	Y	-	-	-	A	IGSCC; (B-J, B9.11) PRR-10
2R-N1B-4	R-A	R1.20	PIPE TO TEE	-	Y	-	-	-	A	IGSCC; (B-J, B9.11) PRR-10, I2P2
2R-N1B-5	R-A	R1.20	TEE TO PIPE	-	Y	-	-	-	A	IGSCC; (B-J, B9.11) PRR-10
2R-N1B-6	R-A	R1.20	PIPE TO PIPE	-	Y	-	-	-	A	IGSCC; (B-J, B9.11) PRR-10
2R-N1B-8	R-A	R1.20	ELBOW TO VALVE	-	Y	-	-	-	A	IGSCC; (B-J, B9.11) PRR-10
2R-N1B-9	R-A	R1.20	VALVE TO ELBOW	-	Y	-	-	-	A	IGSCC; (B-J, B9.11) PRR-10
2R-N1B-10	R-A	R1.20	ELBOW TO PUMP	-	Y	-	-	-	A	IGSCC; (B-J, B9.11) PRR-10, I2P1, I3P1
2R-N1B-13	R-A	R1.20	VALVE TO ELBOW	-	Y	-	-	-	A	IGSCC; (B-J, B9.11) PRR-10

COMPONENT IDENTIFICATION	ASME CODE CAT	ASME CODE ITEM	DESCRIPTION	ASME CODE EXAM	REL REQ	4TH ISI INTERVAL PER1	PER2	PER3	IGSCC CAT.	REMARKS
RECIRC Drawing Number: ISI-I-2R-A Line Number: 28-DCA-2										
2R-N1B-2	R-A	R1.20	SAFE END TO ELBOW	-	Y	-	-	-	A	IGSCC; (B-J, B9.11) PRR-10
2R-N1B-7	R-A	R1.20	PIPE TO ELBOW	-	Y	-	-	-	A	IGSCC; (B-J, B9.11) PRR-10
2R-N1B-11	R-A	R1.20	PUMP TO PIPE	-	Y	-	-	-	A	IGSCC; (B-J, B9.11) PRR-10, I2P1
2R-N1B-12	R-A	R1.20	PIPE TO VALVE	-	Y	-	-	-	A	IGSCC; (B-J, B9.11) PRR-10
2R-N1B-14	R-A	R1.20	ELBOW TO PIPE	-	Y	-	-	-	A	IGSCC; (B-J, B9.11) PRR-10
2R-N1B-15	R-A	R1.20	PIPE TO TEE/CROSS	-	Y	-	-	-	A	IGSCC; (B-J, B9.11) PRR-10, I2P3
2R-N1B-14ALU	N/A	N/A	LONG SEAM	-	Y	-	-	-	-	(B-J, B9.12) PRR-10
H-2-1-H6	F-A	F1.10-C	SPRING HANGER	-	-	1	-	-	-	I2P1, I3P1, 2R-N1B-5HL1(4)
2R-N1B-14HL2(4)	B-K	B10.30	4 HANGER LUGS	-	-	1	-	-	-	I2P1, I3P1, H-2-1-H8
2R-N1B-4LD	N/A	N/A	LONG SEAM	-	Y	-	-	-	-	(B-J, B9.12) PRR-10
2R-N1B-6HL1(3)	B-K	B10.40	INSULATION LUGS	-	-	-	-	-	-	EXEMPT
2-P201A-PL(3)	B-K	B10.40	SUPPORT LUGS	-	-	-	-	-	-	I2P3
2-VI-202-4A	B-M-2	B12.50	VALVE INTERNALS	-	-	-	-	-	-	-
2-VI-202-5A	B-M-2	B12.50	VALVE INTERNALS	-	-	-	-	-	-	-
H-2-1-H10	F-A	F1.10-C	SPRING HANGER	-	-	-	-	-	-	I2P1, I3P3
H-2-1-H12	F-A	F1.10-C	SPRING HANGER	-	-	-	-	-	-	I2P1
H-2-1-H14	F-A	F1.10-C	SPRING HANGER	-	-	-	-	-	-	I2P1
2R-N1B-14BLU	N/A	N/A	LONG SEAM	-	Y	-	-	-	-	(B-J, B9.12) PRR-10
H-2-1-H18	F-A	F1.10-C	SPRING HANGER	-	-	-	2	-	-	I2P1, I3P2

COMPONENT IDENTIFICATION	ASME CODE CAT	ASME CODE ITEM	DESCRIPTION	ASME CODE EXAM	REL REQ	4TH ISI INTERVAL PER1	PER2	PER3	IGSCC CAT.	REMARKS
RECIRC Drawing Number: ISI-I-2R-A Line Number: 28-DCA-2										
2R-N1B-14HL1(3)	B-K	B10.40	INSULATION LUGS	-	-	-	-	-	-	EXEMPT, H-2-1-H16
H-2-1-H8	F-A	F1.10-C	SPRING HANGER	-	-	1	-	-	-	I2P1, I3P1, 2R-N1B-14HL2(4)
H-2-1-SS11	N/A	N/A	SNUBBER	-	-	-	-	-	-	I2P1, no clamp, recirc. pmp. mtr. housing
H-2-1-SS12	N/A	N/A	SNUBBER	-	-	-	-	-	-	I2P1, no clamp, recirc. pmp. mtr. housing
H-2-1-SS15	N/A	N/A	SNUBBER	-	-	-	-	-	-	I2P1, no clamp, recirc. pmp. mtr. housing
H-2-1-SS20	N/A	N/A	SNUBBER	-	-	-	2	-	-	I2P1, I3P2
H-2-1-SS21	N/A	N/A	SNUBBER	-	-	-	2	-	-	I2P1, I3P2
H-2-1-SS22	N/A	N/A	SNUBBER	-	-	-	2	-	-	I2P1, I3P2
H-2-1-SS23	N/A	N/A	SNUBBER	-	-	-	-	-	-	I2P1
H-2-1-SS5	N/A	N/A	SNUBBER	-	-	-	-	3	-	I2P1, I3P3, Clamp
H-2-1-SS7	N/A	N/A	SNUBBER	-	-	-	-	-	-	I2P1
H-2-1-H16	F-A	F1.10-C	SPRING HANGER	-	-	-	-	3	-	I2P3, I3P3, 2R-N1B-14HL1(3)
H-2-1-SS9	N/A	N/A	SNUBBER	-	-	-	-	-	-	I2P1
2R-N1B-14LD	N/A	N/A	LONG SEAM	-	Y	-	-	-	-	(B-J, B9.12) PRR-10
2R-N1B-15LD	N/A	N/A	LONG SEAM	-	Y	-	-	-	-	(B-J, B9.12) PRR-10
2R-N1B-15LU	N/A	N/A	LONG SEAM	-	Y	-	-	-	-	(B-J, B9.12) PRR-10
2R-N1B-2ALD	N/A	N/A	LONG SEAM	-	Y	-	-	-	-	(B-J, B9.12) PRR-10
2R-N1B-2BLD	N/A	N/A	LONG SEAM	-	Y	-	-	-	-	(B-J, B9.12) PRR-10
2R-N1B-3ALU	N/A	N/A	LONG SEAM	-	Y	-	-	-	-	(B-J, B9.12) PRR-10

COMPONENT IDENTIFICATION	ASME CODE CAT	ASME CODE ITEM	DESCRIPTION	ASME CODE EXAM	REL REQ	4TH ISI INTERVAL PER1	PER2	PER3	IGSCC CAT.	REMARKS
RECIRC Drawing Number: ISI-I-2R-A Line Number: 28-DCA-2										
2R-N1B-3BLU	N/A	N/A	LONG SEAM	-	Y	-	-	-	-	(B-J, B9.12) PRR-10
2R-N1B-3LD	N/A	N/A	LONG SEAM	-	Y	-	-	-	-	(B-J, B9.12) PRR-10
2R-N1B-5HL1(4)	B-K	B10.40	4 HANGER LUGS	-	-	-	-	-	-	I2P1, H-2-1-H6
2R-N1B-4LU	N/A	N/A	LONG SEAM	-	Y	-	-	-	-	(B-J, B9.12) PRR-10
2R-N1B-9BC-1	R-A	R1.20	BR CONN TO ELBOW	-	Y	-	-	-	A	IGSCC; (B-J, B9.31) PRR-10, I2P1, I3P1
2R-N1B-5LU	N/A	N/A	LONG SEAM	-	Y	-	-	-	-	(B-J, B9.12) PRR-10
2R-N1B-6LD	N/A	N/A	LONG SEAM	-	Y	-	-	-	-	(B-J, B9.12) PRR-10
2R-N1B-6LU	N/A	N/A	LONG SEAM	-	Y	-	-	-	-	(B-J, B9.12) PRR-10
2R-N1B-7ALD	N/A	N/A	LONG SEAM	-	Y	-	-	-	-	(B-J, B9.12) PRR-10
2R-N1B-7BLD	N/A	N/A	LONG SEAM	-	Y	-	-	-	-	(B-J, B9.12) PRR-10
2R-N1B-7LU	N/A	N/A	LONG SEAM	-	Y	-	-	-	-	(B-J, B9.12) PRR-10
2R-N1B-8ALU	N/A	N/A	LONG SEAM	-	Y	-	-	-	-	(B-J, B9.12) PRR-10
2R-N1B-8BLU	N/A	N/A	LONG SEAM	-	Y	-	-	-	-	(B-J, B9.12) PRR-10
2R-N1B-9ALD	N/A	N/A	LONG SEAM	-	Y	-	-	-	-	(B-J, B9.12) PRR-10
2R-N1B-9BLD	N/A	N/A	LONG SEAM	-	Y	-	-	-	-	(B-J, B9.12) PRR-10
2R-BPA-1	R-A	R1.20	BR CONN TO PIPE	-	Y	-	-	-	A	IGSCC; (B-J, B9.31) PRR-10
2-PB-201A	B-G-1	B6.180	PUMP BOLTING	-	-	-	2	-	-	I2P1, I3P2

COMPONENT IDENTIFICATION	ASME CODE CAT	ASME CODE ITEM	DESCRIPTION	ASME CODE EXAM	REL REQ	4TH ISI INTERVAL PER1	PER2	PER3	IGSCC CAT.	REMARKS
RECIRC Drawing Number: ISI-I-2R-A Line Number: 4-DCA-2										
2R-FB-N1B-9BC-1	B-G-2	B7.50	FLANGE BOLTING	-	Y	-	2	-	-	PRR-14, I2P1, I3P2
2R-FB-BPA-1	B-G-2	B7.50	FLANGE BOLTING	-	Y	-	-	3	-	PRR-14, I2P3, I3P3

COMPONENT IDENTIFICATION	ASME CODE CAT	ASME CODE ITEM	DESCRIPTION	ASME CODE EXAM	REL REQ	4TH ISI INTERVAL PER1	PER2	PER3	IGSCC CAT.	REMARKS
RECIRC										
Drawing Number: ISI-I-2R-B										
Line Number: N/A										
2-PI-201B	B-L-2	B12.20	PUMP INTERNALS	-	-	-	-	-	-	-
Line Number: 12-DCA-2										
2R-N2F-2	R-A	R1.20	PIPE TO SAFE END	-	Y	-	-	-	A	IGSCC; (B-J, B9.11); PRR-10
2R-N2F-3	R-A	R1.20	COMPOUND BEND TO PIPE	-	Y	-	-	-	A	IGSCC; (B-J, B9.11); PRR-10
2R-N2K-3LD	N/A	N/A	LONG SEAM	-	Y	-	-	-	-	(B-J, B9.12) PRR-10
2R-N2K-2LU	N/A	N/A	LONG SEAM	-	Y	-	-	-	-	(B-J, B9.12) PRR-10
2R-N2J-3LD	N/A	N/A	LONG SEAM	-	Y	-	-	-	-	(B-J, B9.12) PRR-10
2R-N2J-2LU	N/A	N/A	LONG SEAM	-	Y	-	-	-	-	(B-J, B9.12) PRR-10
2R-N2H-3LU	N/A	N/A	LONG SEAM	-	Y	-	-	-	-	(B-J, B9.12) PRR-10
2R-N2H-3LD	N/A	N/A	LONG SEAM	-	Y	-	-	-	-	(B-J, B9.12) PRR-10
2R-N2H-2LU	N/A	N/A	LONG SEAM	-	Y	-	-	-	-	(B-J, B9.12) PRR-10
2R-N2G-3LD	N/A	N/A	LONG SEAM	-	Y	-	-	-	-	(B-J, B9.12) PRR-10
2R-N2G-2LU	N/A	N/A	LONG SEAM	-	Y	-	-	-	-	(B-J, B9.12) PRR-10
2R-N2F-3LU	N/A	N/A	LONG SEAM	-	Y	-	-	-	-	(B-J, B9.12) PRR-10
2R-N2K-3LU	N/A	N/A	LONG SEAM	-	Y	-	-	-	-	(B-J, B9.12) PRR-10
2R-N2F-2LU	N/A	N/A	LONG SEAM	-	Y	-	-	-	-	(B-J, B9.12) PRR-10
2R-N2G-2	R-A	R1.20	PIPE TO SAFE END	-	Y	-	-	-	A	IGSCC; (B-J, B9.11) PRR-10
2R-N2G-3	R-A	R1.20	HEADER TO PIPE	-	Y	-	-	-	A	IGSCC; (B-J, B9.11) PRR-10

COMPONENT IDENTIFICATION	ASME CODE CAT	ASME CODE ITEM	DESCRIPTION	ASME CODE EXAM	REL REQ	4TH ISI INTERVAL PER1	PER2	PER3	IGSCC CAT.	REMARKS
RECIRC Drawing Number: ISI-I-2R-B Line Number: 12-DCA-2										
2R-N2H-2	R-A	R1.20	PIPE TO SAFE END	-	Y	-	-	-	A	IGSCC; (B-J, B9.11) PRR-10
2R-N2H-3	R-A	R1.20	CROSS TO PIPE	-	Y	-	-	-	A	IGSCC; (B-J, B9.11) PRR-10, I2P2
2R-N2J-2	R-A	R1.20	PIPE TO SAFE END	-	Y	-	-	-	A	IGSCC; (B-J, B9.11) PRR-10
2R-N2J-3	R-A	R1.20	HEADER TO PIPE	-	Y	-	-	-	A	IGSCC; (B-J, B9.11) PRR-10
2R-N2K-2	R-A	R1.20	PIPE TO SAFE END	-	Y	-	-	3	A	RI-ISI; IGSCC; (B-J, B9.11); PRR-10; I3P3
2R-N2K-3	R-A	R1.20	COMPOUND BEND TO PIPE	-	Y	-	-	-	A	IGSCC; (B-J, B9.11) PRR-10
2R-HB-1LD	N/A	N/A	LONG SEAM	-	Y	-	-	-	-	(B-J, B9.12) PRR-10
2R-HB-1LU	N/A	N/A	LONG SEAM	-	Y	-	-	-	-	(B-J, B9.12) PRR-10
2R-HB-4LD	N/A	N/A	LONG SEAM	-	Y	-	-	-	-	(B-J, B9.12) PRR-10
2R-HB-4LU	N/A	N/A	LONG SEAM	-	Y	-	-	-	-	(B-J, B9.12) PRR-10
2R-N2F-3LD	N/A	N/A	LONG SEAM	-	Y	-	-	-	-	(B-J, B9.12) PRR-10
H-2-1-H4	F-A	F1.10-C	SPRING HANGER	-	-	-	-	-	-	I2P1
2R-HB-1	R-A	R1.20	HEADER TO BEND	-	Y	-	2	-	A	RI-ISI; IGSCC; (B-J, B9.11); PRR-10; I3P2
H-2-1-SS1	N/A	N/A	SNUBBER	-	-	-	-	-	-	I2P1, clamp
2R-HB-4	R-A	R1.20	HEADER TO BEND	-	Y	-	2	-	A	RI-ISI; IGSCC; (B-J, B9.11); PRR-10; I3P2
H-2-1-H2	F-A	F1.10-C	SPRING HANGER	-	-	-	-	-	-	I2P1

COMPONENT IDENTIFICATION	ASME CODE CAT	ASME CODE ITEM	DESCRIPTION	ASME CODE EXAM	REL REQ	4TH ISI INTERVAL PER1	PER2	PER3	IGSCC CAT.	REMARKS
RECIRC										
Drawing Number: ISI-I-2R-B										
Line Number: 2-DCA-2										
2-VB-63B	B-G-2	B7.70	VALVE BOLTING	-	Y	-	-	3	-	PRR-14, I2P3, I3P3
2-VB-64B	B-G-2	B7.70	VALVE BOLTING	-	Y	-	-	-	-	PRR-14, I2P3
H-2-1-G2	F-A	F1.10-B	GUIDE	-	-	-	-	-	-	I2P1
2R-N1A-7BC-2	R-A	R1.20	BR CONN TO ELBOW	-	Y	-	-	-	-	(B-J, B9.32) PRR-10
2R-N1A-7BC-2A	R-A	R1.20	BR CONN TO PIPE	-	Y	-	-	-	-	(B-J, B9.40) PRR-10
2R-N1A-7BC-3	R-A	R1.20	PIPE TO VALVE	-	Y	-	-	-	-	(B-J, B9.40) PRR-10
2R-N1A-7BC-4	R-A	R1.20	VALVE TO PIPE	-	Y	-	-	-	-	(B-J, B9.40) PRR-10
2R-N1A-7BC-5	R-A	R1.20	PIPE TO VALVE	-	Y	-	-	-	-	(B-J, B9.40) PRR-10
Line Number: 22-DCA-2										
H-2-1-SS4	N/A	N/A	SNUBBER	-	-	-	-	-	-	I2P1, clamp
2R-HB-2LD	N/A	N/A	LONG SEAM	-	Y	-	-	-	-	(B-J, B9.12) PRR-10
2R-HB-3LD	N/A	N/A	LONG SEAM	-	Y	-	-	-	-	(B-J, B9.12) PRR-10
2R-HB-2	R-A	R1.20	CROSS TO HEADER	-	Y	-	-	-	A	IGSCC; (B-J, B9.11) PRR-10
2R-HB-3	R-A	R1.20	CROSS TO HEADER	-	Y	-	-	-	A	IGSCC; (B-J, B9.11) PRR-10

COMPONENT IDENTIFICATION	ASME CODE CAT	ASME CODE ITEM	DESCRIPTION	ASME CODE EXAM	REL REQ	4TH ISI INTERVAL PER1	PER2	PER3	IGSCC CAT.	REMARKS
RECIRC										
Drawing Number: ISI-I-2R-B										
Line Number: 28-DCA-2										
2R-N1A-12LD	N/A	N/A	LONG SEAM	-	Y	-	-	-	-	(B-J, B9.12) PRR-10
2R-N1A-12BLU	N/A	N/A	LONG SEAM	-	Y	-	-	-	-	(B-J, B9.12) PRR-10
2R-N1A-12ALU	N/A	N/A	LONG SEAM	-	Y	-	-	-	-	(B-J, B9.12) PRR-10
2R-N1A-11BLD	N/A	N/A	LONG SEAM	-	Y	-	-	-	-	(B-J, B9.12) PRR-10
2R-N1A-11ALD	N/A	N/A	LONG SEAM	-	Y	-	-	-	-	(B-J, B9.12) PRR-10
2R-N1A-10LU	N/A	N/A	LONG SEAM	-	Y	-	-	-	-	(B-J, B9.12) PRR-10
2-FS-201B	B-G-1	B6.190	PUMP FLANGE SURFACE	-	-	1	-	-	-	I2P1, I3P1
2R-N1A-4LU	N/A	N/A	LONG SEAM	-	Y	-	-	-	-	(B-J, B9.12) PRR-10
2R-N1A-13LD	N/A	N/A	LONG SEAM	-	Y	-	-	-	-	(B-J, B9.12) PRR-10
2-VB-202-4B	B-G-2	B7.70	VALVE BOLTING	-	Y	-	3	-	-	PRR-14, I2P2, I3P2
2-VB-202-5B	B-G-2	B7.70	VALVE BOLTING	-	Y	-	-	3	-	PRR-14, I2P3, I3P3
2R-N1A-3	R-A	R1.20	ELBOW TO PIPE	-	Y	-	-	-	A	IGSCC; (B-J, B9.11) PRR-10
2R-N1A-4	R-A	R1.20	PIPE TO PIPE	-	Y	-	-	-	A	IGSCC; (B-J, B9.11) PRR-10
2R-N1A-5	R-A	R1.20	PIPE TO ELBOW	-	Y	-	-	-	A	IGSCC; (B-J, B9.11) PRR-10
2R-N1A-6	R-A	R1.20	ELBOW TO VALVE	-	Y	-	-	-	A	IGSCC; (B-J, B9.11) PRR-10, I2P1
2R-N1A-8	R-A	R1.20	ELBOW TO PUMP	-	Y	-	-	-	A	IGSCC; (B-J, B9.11) PRR-10, I2P1, I3P1
2R-N1A-9	R-A	R1.20	PUMP TO PIPE	-	Y	-	-	-	A	IGSCC; (B-J, B9.11) PRR-10, I2P1
2R-N1A-10	R-A	R1.20	PIPE TO VALVE	-	Y	-	-	-	A	IGSCC; (B-J, B9.11) PRR-10, I2P1, I3P1
2R-N1A-12	R-A	R1.20	ELBOW TO PIPE	-	Y	-	-	-	A	IGSCC; (B-J, B9.11) PRR-10

COMPONENT IDENTIFICATION	ASME CODE CAT	ASME CODE ITEM	DESCRIPTION	ASME CODE EXAM	REL REQ	4TH ISI INTERVAL PER1	PER2	PER3	IGSCC CAT.	REMARKS
RECIRC Drawing Number: ISI-I-2R-B Line Number: 28-DCA-2										
2R-N1A-2	R-A	R1.20	PIPE TO SAFE END	-	Y	-	-	-	A	IGSCC; (B-J, B9.11); PRR-10
2R-N1A-7	R-A	R1.20	VALVE TO ELBOW	-	Y	-	-	-	A	IGSCC; (B-J, B9.11); PRR-10
2R-N1A-11	R-A	R1.20	VALVE TO ELBOW	-	Y	-	-	-	A	IGSCC; (B-J, B9.11); PRR-10
2R-N1A-13	R-A	R1.20	PIPE TO TEE	-	Y	-	-	-	A	IGSCC; (B-J, B9.11); PRR-10, I2P3
2R-N1A-14	R-A	R1.20	TEE TO PIPE	-	Y	-	-	-	A	IGSCC; (B-J, B9.11); PRR-10, I2P2
2R-N1A-15	R-A	R1.20	PIPE TO CROSS	-	Y	-	-	-	A	IGSCC; (B-J, B9.11); PRR-10
2-PN-201B	B-G-1	B6.200	PUMP NUTS	-	-	-	-	-	-	I2P1
2R-N1A-12HL2(4)	B-K	B10.40	HANGER LUGS	-	-	-	-	-	-	I2P1, H-2-1-H9
2R-N1A-3LD	N/A	N/A	LONG SEAM	-	Y	-	-	-	-	(B-J, B9.12) PRR-10
2R-N1A-4HL2(3)	B-K	B10.40	INSULATION LUGS	-	-	-	-	-	-	EXEMPT
2-P201B-PL(3)	B-K	B10.40	SUPPORT LUGS	-	-	-	-	-	-	I2P1
2-VI-202-4B	B-M-2	B12.50	VALVE INTERNALS	-	-	-	-	-	-	-
2-VI-202-5B	B-M-2	B12.50	VALVE INTERNALS	-	-	-	-	-	-	-
H-2-1-H7	F-A	F1.10-C	SPRING HANGER	-	-	-	-	-	-	I2P1, 2R-N1A-4HL1(4)
H-2-1-H11	F-A	F1.10-C	SPRING HANGER	-	-	-	-	-	-	I2P1
H-2-1-H13	F-A	F1.10-C	SPRING HANGER	-	-	-	-	-	-	I2P1
H-2-1-H15	F-A	F1.10-C	SPRING HANGER	-	-	-	-	-	-	I2P1
H- 2-1-H19	F-A	F1.10-C	SPRING HANGER	-	-	-	-	-	-	I2P1, 2R-N1A-12HL1(3)
2R-N1A-13LU	N/A	N/A	LONG SEAM	-	Y	-	-	-	-	(B-J, B9.12) PRR-10

COMPONENT IDENTIFICATION	ASME CODE CAT	ASME CODE ITEM	DESCRIPTION	ASME CODE EXAM	REL REQ	4TH ISI INTERVAL PER1	PER2	PER3	IGSCC CAT.	REMARKS
RECIRC Drawing Number: ISI-I-2R-B Line Number: 28-DCA-2										
2R-N1A-12HL1(3)	B-K	B10.40	INSULATION LUGS	-	-	-	-	-	-	EXEMPT, H- 2-1-H19, H-2-1-H17
H-2-1-SS6	N/A	N/A	SNUBBER	-	-	-	-	-	-	I2P1
H-2-1-SS8	N/A	N/A	SNUBBER	-	-	-	-	-	-	I2P1
H-2-1-SS10	N/A	N/A	SNUBBER	-	-	-	-	-	-	I2P1, no clamp, recirc. pmp. mtr. housing
H-2-1-SS13	N/A	N/A	SNUBBER	-	-	-	-	-	-	I2P1, clamp, recirc. pmp. mtr. housing
H-2-1-SS14	N/A	N/A	SNUBBER	-	-	-	-	-	-	I2P1 , clamp, recirc. pmp. mtr. housing
H-2-1-SS16	N/A	N/A	SNUBBER	-	-	-	-	-	-	I2P1
H-2-1-SS19	N/A	N/A	SNUBBER	-	-	-	-	-	-	I2P1
H-2-1-SS24	N/A	N/A	SNUBBER	-	-	-	-	-	-	I2P1
H-2-1-SS25	N/A	N/A	SNUBBER	-	-	-	-	-	-	I2P1
H-2-1-SS26	N/A	N/A	SNUBBER	-	-	-	-	-	-	I2P1
H-2-1-H9	F-A	F1.10-C	SPRING HANGER	-	-	-	-	-	-	I2P1, 2R-N1A-12HL2(4)
H-2-1-H17	F-A	F1.10-C	SPRING HANGER	-	-	-	-	-	-	I2P1, 2R-N1A-12HL1(3)
2R-N1A-14LD	N/A	N/A	LONG SEAM	-	Y	-	-	-	-	(B-J, B9.12) PRR-10
2R-N1A-14LU	N/A	N/A	LONG SEAM	-	Y	-	-	-	-	(B-J, B9.12) PRR-10
2R-N1A-15LD	N/A	N/A	LONG SEAM	-	Y	-	-	-	-	(B-J, B9.12) PRR-10
2R-N1A-15LU	N/A	N/A	LONG SEAM	-	Y	-	-	-	-	(B-J, B9.12) PRR-10
2R-N1A-2ALD	N/A	N/A	LONG SEAM	-	Y	-	-	-	-	(B-J, B9.12) PRR-10
2R-N1A-2BLD	N/A	N/A	LONG SEAM	-	Y	-	-	-	-	(B-J, B9.12) PRR-10

COMPONENT IDENTIFICATION	ASME CODE CAT	ASME CODE ITEM	DESCRIPTION	ASME CODE EXAM	REL REQ	4TH ISI INTERVAL PER1	PER2	PER3	IGSCC CAT.	REMARKS
RECIRC Drawing Number: ISI-I-2R-B Line Number: 28-DCA-2										
2R-N1A-3ALU	N/A	N/A	LONG SEAM	-	Y	-	-	-	-	(B-J, B9.12) PRR-10
2R-N1A-3BLU	N/A	N/A	LONG SEAM	-	Y	-	-	-	-	(B-J, B9.12) PRR-10
2R-N1A-4HL1(4)	B-K	B10.40	4 HANGER LUGS	-	-	-	-	-	-	I2P1, H-2-1-H7
2R-N1A-4LD	N/A	N/A	LONG SEAM	-	Y	-	-	-	-	(B-J, B9.12) PRR-10
2R-N1A-7BC-1	R-A	R1.20	BR CONN TO ELBOW	-	Y	-	-	-	A	IGSCC; (B-J, B9.31) PRR-10
2R-N1A-5ALD	N/A	N/A	LONG SEAM	-	Y	-	-	-	-	(B-J, B9.12) PRR-10
2R-N1A-5BLD	N/A	N/A	LONG SEAM	-	Y	-	-	-	-	(B-J, B9.12) PRR-10
2R-N1A-5LU	N/A	N/A	LONG SEAM	-	Y	-	-	-	-	(B-J, B9.12) PRR-10
2R-N1A-6ALU	N/A	N/A	LONG SEAM	-	Y	-	-	-	-	(B-J, B9.12) PRR-10
2R-N1A-6BLU	N/A	N/A	LONG SEAM	-	Y	-	-	-	-	(B-J, B9.12) PRR-10
2R-N1A-7ALD	N/A	N/A	LONG SEAM	-	Y	-	-	-	-	(B-J, B9.12) PRR-10
2R-N1A-7BLD	N/A	N/A	LONG SEAM	-	Y	-	-	-	-	(B-J, B9.12) PRR-10
2R-N1A-8ALU	N/A	N/A	LONG SEAM	-	Y	-	-	-	-	(B-J, B9.12) PRR-10
2R-N1A-8BLU	N/A	N/A	LONG SEAM	-	Y	-	-	-	-	(B-J, B9.12) PRR-10
2R-N1A-9LD	N/A	N/A	LONG SEAM	-	Y	-	-	-	-	(B-J, B9.12) PRR-10
2R-BP-1A	R-A	R1.20	BR CONN TO PIPE	-	Y	-	-	-	A	IGSCC; (B-J, B9.31) PRR-10
2-PB-201B	B-G-1	B6.180	PUMP BOLTING	-	-	-	2	-	-	I2P1, I3P2

COMPONENT IDENTIFICATION	ASME CODE CAT	ASME CODE ITEM	DESCRIPTION	ASME CODE EXAM	REL REQ	4TH ISI INTERVAL PER1	PER2	PER3	IGSCC CAT.	REMARKS
RECIRC										
Drawing Number: ISI-I-2R-B										
Line Number: 4-DCA-2										
2R-FB-N1A-7BC-1	B-G-2	B7.50	FLANGE BOLTING	-	Y	-	-	3	-	PRR-14, I2P2, I3P3
2R-FB-BP-1A	B-G-2	B7.50	FLANGE BOLTING	-	Y	-	-	3	-	PRR-14, I2P2, I3P3

COMPONENT IDENTIFICATION	ASME CODE CAT	ASME CODE ITEM	DESCRIPTION	ASME CODE EXAM	REL REQ	4TH ISI INTERVAL PER1	PER2	PER3	IGSCC CATEGORY	REMARKS
Residual Heat Removal System **Drawing Number: ISI-I-10-1A** **Line Number: 20-EL-10**										
10-VB-1001-47	B-G-2	B7.70	VALVE BOLTING	-	Y	-	2	-	-	PRR-14, I2P2, I3P2
10-O-15	R-A	R1.20	PIPE TO ELBOW	-	-	-	-	-	-	(B-J/B9.11), PRR-10
10-O-16	R-A	R1.20	ELBOW TO FLUED HEAD	-	Y	-	-	-	-	(B-J/B9.11), PRR-10
10-O-17	R-A	R1.20	FLUED HEAD TO PIPE	-	Y	-	-	-	-	(B-J/B9.11), PRR-10
10-O-18	R-A	R1.20	PIPE TO PIPE	-	Y	-	-	-	-	(B-J/B9.11), PRR-10
10-O-19	R-A	R1.20	PIPE TO ELBOW	-	Y	-	-	-	-	(B-J/B9.11), PRR-10
10-O-20	R-A	R1.20	ELBOW TO PIPE	-	Y	-	-	-	-	(B-J/B9.11), PRR-10
10-O-21	R-A	R1.20	PIPE TO ELBOW	-	Y	-	-	-	-	(B-J/B9.11), PRR-10
10-O-22	R-A	R1.20	ELBOW TO PIPE	-	Y	-	-	-	-	(B-J/B9.11), PRR-10
10-O-23	R-A	R1.20	PIPE TO PIPE	-	Y	-	-	-	-	(B-J/B9.11), PRR-10
10-O-24	R-A	R1.20	PIPE TO PIPE	-	Y	-	-	3	-	RI-ISI; (B-J, B9.11); PRR-10
10-O-25	R-A	R1.20	PIPE TO PIPE	-	Y	-	-	3	-	RI-ISI; (B-J, B9.11); PRR-10
10-O-27	R-A	R1.20	PIPE TO VALVE	-	Y	-	-	-	-	(B-J/B9.11), PRR-10
10-O-25HL1(4)	B-K	B10.20	SUPPORT LUGS	-	-	-	-	-	-	H-10-1-48SH
10-VI-1001-47	B-M-2	B12.50	VALVE INTERNALS	-	-	-	-	-	-	-
H-10-1-48SH	F-A	F1.10-A	RIGID HANGER	-	-	-	2	-	-	I3P2, 10-O-25HL-1(4)
H-10-1-X12	F-A	F1.10-B	ANCHOR	-	-	-	-	-	-	-

COMPONENT IDENTIFICATION	ASME CODE CAT	ASME CODE ITEM	DESCRIPTION	ASME CODE EXAM	REL REQ	4TH ISI INTERVAL PER1	PER2	PER3	IGSCC CATEGORY	REMARKS
Residual Heat Removal System **Drawing Number: ISI-I-10-1A** **Line Number: 20-DCA-10**										
10-VB-1001-50	B-G-2	B7.70	VALVE BOLTING	-	Y	-	-	-	-	PRR-14, I2P2, I3P2
10-VB-1001-51	B-G-2	B7.70	VALVE BOLTING	-	Y	-	-	-	-	PRR-14, I2P2, I3P2
10R-O-10	R-A	R1.20	PIPE TO PIPE	-	Y	-	-	-	A	IGSCC; (B-J/B9.11), PRR-10
10R-O-11	R-A	R1.20	PIPE TO ELBOW	-	Y	-	-	-	A	IGSCC; (B-J/B9.11), PRR-10
10R-O-12	R-A	R1.20	ELBOW TO VALVE	-	Y	-	-	-	A	IGSCC; (B-J/B9.11), PRR-10
10R-O-13	R-A	R1.20	VALVE TO PIPE	-	Y	-	-	-	A	IGSCC; (B-J/B9.11), PRR-10
10R-O-2	R-A	R1.20	45 ELBOW TO PIPE	-	Y	-	-	-	A	IGSCC; (B-J/B9.11), PRR-10
10R-O-3	R-A	R1.20	PIPE TO ELBOW	-	Y	-	-	-	A	IGSCC; (B-J/B9.11), PRR-10
10R-O-4	R-A	R1.20	ELBOW TO PIPE	-	Y	-	-	-	A	IGSCC; (B-J/B9.11), PRR-10
10R-O-5	R-A	R1.20	PIPE TO 45 ELBOW	-	Y	-	-	-	A	IGSCC; (B-J/B9.11), PRR-10
10R-O-6	R-A	R1.20	45 ELBOW TO PIPE	-	Y	-	-	-	A	IGSCC; (B-J/B9.11), PRR-10
10R-O-7	R-A	R1.20	PIPE TO VALVE	-	Y	-	-	-	A	IGSCC; (B-J/B9.11), PRR-10
10R-O-8	R-A	R1.20	VALVE TO ELBOW	-	Y	-	-	-	A	IGSCC; (B-J/B9.11), PRR-10
10R-O-9	R-A	R1.20	ELBOW TO PIPE	-	Y	-	-	-	A	IGSCC; (B-J/B9.11), PRR-10
10R-O-10LD	N/A	N/A	LONG SEAM	-	Y	-	-	-	-	(B-J), PRR-10
10R-O-10LU	N/A	N/A	LONG SEAM	-	Y	-	-	-	-	(B-J), PRR-10
10R-O-11ALD	N/A	N/A	LONG SEAM	-	Y	-	-	-	-	(B-J), PRR-10
10R-O-11BLD	N/A	N/A	LONG SEAM	-	Y	-	-	-	-	(B-J), PRR-10
10R-O-11LU	N/A	N/A	LONG SEAM	-	Y	-	-	-	-	(B-J), PRR-10

COMPONENT IDENTIFICATION	ASME CODE CAT	ASME CODE ITEM	DESCRIPTION	ASME CODE EXAM	REL REQ	4TH ISI INTERVAL PER1	PER2	PER3	IGSCC CATEGORY	REMARKS
Residual Heat Removal System **Drawing Number: ISI-I-10-1A** **Line Number: 20-DCA-10**										
10R-O-12ALU	N/A	N/A	LONG SEAM	-	Y	-	-	-	-	(B-J), PRR-10
10R-O-12BLU	N/A	N/A	LONG SEAM	-	Y	-	-	-	-	(B-J), PRR-10
10R-O-13LD	N/A	N/A	LONG SEAM	-	Y	-	-	-	-	(B-J), PRR-10
10R-O-14LU	N/A	N/A	LONG SEAM	-	Y	-	-	-	-	(B-J), PRR-10
10R-O-1ALD	N/A	N/A	LONG SEAM	-	Y	-	-	-	-	(B-J), PRR-10
10R-O-1BLD	N/A	N/A	LONG SEAM	-	Y	-	-	-	-	(B-J), PRR-10
10R-O-2ALU	N/A	N/A	LONG SEAM	-	Y	-	-	-	-	(B-J), PRR-10
10R-O-2BLU	N/A	N/A	LONG SEAM	-	Y	-	-	-	-	(B-J), PRR-10
10R-O-2LD	N/A	N/A	LONG SEAM	-	Y	-	-	-	-	(B-J), PRR-10
10R-O-3ALD	N/A	N/A	LONG SEAM	-	Y	-	-	-	-	(B-J), PRR-10
10R-O-3BLD	N/A	N/A	LONG SEAM	-	Y	-	-	-	-	(B-J), PRR-10
10R-O-3LU	N/A	N/A	LONG SEAM	-	Y	-	-	-	-	(B-J), PRR-10
10R-O-4ALU	N/A	N/A	LONG SEAM	-	Y	-	-	-	-	(B-J), PRR-10
10R-O-4BLU	N/A	N/A	LONG SEAM	-	Y	-	-	-	-	(B-J), PRR-10
10R-O-4LD	N/A	N/A	LONG SEAM	-	Y	-	-	-	-	(B-J), PRR-10
10R-O-5ALD	N/A	N/A	LONG SEAM	-	Y	-	-	-	-	(B-J), PRR-10

COMPONENT IDENTIFICATION	ASME CODE CAT	ASME CODE ITEM	DESCRIPTION	ASME CODE EXAM	REL REQ	4TH ISI INTERVAL PER1	PER2	PER3	IGSCC CATEGORY	REMARKS
Residual Heat Removal System **Drawing Number: ISI-I-10-1A** **Line Number: 20-DCA-10**										
10R-O-5BLD	N/A	N/A	LONG SEAM	-	Y	-	-	-	-	(B-J), PRR-10
10R-O-5LU	N/A	N/A	LONG SEAM	-	Y	-	-	-	-	(B-J), PRR-10
10R-O-6ALU	N/A	N/A	LONG SEAM	-	Y	-	-	-	-	(B-J), PRR-10
10R-O-6BLU	N/A	N/A	LONG SEAM	-	Y	-	-	-	-	(B-J), PRR-10
10R-O-6LD	N/A	N/A	LONG SEAM	-	Y	-	-	-	-	(B-J), PRR-10
10R-O-7LU	N/A	N/A	LONG SEAM	-	Y	-	-	-	-	(B-J), PRR-10
10R-O-8ALD	N/A	N/A	LONG SEAM	-	Y	-	-	-	-	(B-J), PRR-10
10R-O-8BLD	N/A	N/A	LONG SEAM	-	Y	-	-	-	-	(B-J), PRR-10
10R-O-9ALU	N/A	N/A	LONG SEAM	-	Y	-	-	-	-	(B-J), PRR-10
10R-O-9BLU	N/A	N/A	LONG SEAM	-	Y	-	-	-	-	(B-J), PRR-10
10R-O-9LD	N/A	N/A	LONG SEAM	-	Y	-	-	-	-	(B-J), PRR-10
10R-O-10HL-1(8)	B-K	B10.20	8 HANGER LUGS	-	-	-	-	-	-	H-10-1-178
10R-O-4HL-1(2)	B-K	B10.20	2 HANGER EYES	-	-	-	-	-	-	H-10-1-176
10-VI-1001-50	B-M-2	B12.50	VALVE INTERNALS	-	-	-	-	-	-	-
10-VI-1001-51	B-M-2	B12.50	VALVE INTERNALS	-	-	-	-	-	-	-
H-10-1-176	F-A	F1.10-C	SPRING HANGER	-	-	-	-	3	-	I3P3, 10R-O-4HL-1(2)
H-10-1-177	F-A	F1.10-C	SPRING HANGER	-	-	-	-	-	-	I3P2
H-10-1-178	F-A	F1.10-C	SPRING HANGER	-	-	-	-	-	-	10R-O-10HL-1(8)
H-10-1-SS21	N/A	N/A	SNUBBER	-	-	-	-	-	-	-

COMPONENT IDENTIFICATION	ASME CODE CAT	ASME CODE ITEM	DESCRIPTION	ASME CODE EXAM	REL REQ	4TH ISI INTERVAL PER1	PER2	PER3	IGSCC CATEGORY	REMARKS
Residual Heat Removal System **Drawing Number: ISI-I-10-1A** **Line Number: 20-DCA-10**										
H-10-1-SS22	N/A	N/A	SNUBBER	-	-	-	-	-	-	-
H-10-1-SS23	N/A	N/A	SNUBBER	-	-	-	-	-	-	-
H-10-1-SS24	N/A	N/A	SNUBBER	-	-	-	-	-	-	-

COMPONENT IDENTIFICATION	ASME CODE CAT	ASME CODE ITEM	DESCRIPTION	ASME CODE EXAM	REL REQ	4TH ISI INTERVAL PER1	PER2	PER3	IGSCC CATEGORY	REMARKS
Residual Heat Removal System										
Drawing Number: ISI-I-10-1A										
Line Number: 20-DCA/EL-10										
10R-O-14	R-A	R1.20	PIPE TO PIPE	-	Y	-	-	-	A	IGSCC; (B-F/B5.130), PRR-10

COMPONENT IDENTIFICATION	ASME CODE CAT	ASME CODE ITEM	DESCRIPTION	ASME CODE EXAM	REL REQ	4TH ISI INTERVAL PER1	PER2	PER3	IGSCC CATEGORY	REMARKS
Residual Heat Removal System **Drawing Number: ISI-I-10-1** **Line Number: 18-DC-10**										
10-VB-1001-29A	B-G-2	B7.70	VALVE BOLTING	-	Y	-	-	-	-	PRR-14, I2P1, I3P1
10-VB-1001-29B	B-G-2	B7.70	VALVE BOLTING	-	Y	-	-	-	-	PRR-14, I2P1, I3P1
10-IA-13A	R-A	R1.20	PENETRATION TO FLUED HEAD	-	Y	-	-	-	G	IGSCC; (B-J/ B9.11), PRR-10
10-IA-14	R-A	R1.20	PIPE TO FLUED HEAD	-	Y	-	-	-	D	IGSCC; (B-J/ B9.11), PRR-10
10-IA-15	R-A	R1.20	VALVE TO PIPE	-	Y	-	-	-	D	IGSCC; (B-J/ B9.11), PRR-10
10-IB-13A	R-A	R1.20	PENETRATION TO FLUED HEAD	-	Y	-	-	-	G	IGSCC; (B-J/ B9.11), PRR-10
10-VI-1001-29A	B-M-2	B12.50	VALVE INTERNALS	-	-	-	-	-	-	-
10-VI-1001-29B	B-M-2	B12.50	VALVE INTERNALS	-	-	-	-	-	-	-
H-10-1-X51B	F-A	F1.10-B	ANCHOR	-	-	-	-	-	-	-

COMPONENT IDENTIFICATION	ASME CODE CAT	ASME CODE ITEM	DESCRIPTION	ASME CODE EXAM	REL REQ	4TH ISI INTERVAL PER1	PER2	PER3	IGSCC CATEGORY	REMARKS
Residual Heat Removal System **Drawing Number: ISI-I-10-1** **Line Number: 18-DCA-10**										
10-VB-1001-33A	B-G-2	B7.70	VALVE BOLTING	-	Y	-	2	-	-	PRR-14, I2P1, I3P2
10-VB-1001-33B	B-G-2	B7.70	VALVE BOLTING	-	Y	-	-	3	-	PRR-14, I2P3, I3P3
10-VB-1001-68A	B-G-2	B7.70	VALVE BOLTING	-	Y	-	2	-	-	PRR-14, I2P1, I3P2
10-VB-1001-68B	B-G-2	B7.70	VALVE BOLTING	-	Y	-	-	3	-	PRR-14, I2P3, I3P3
10R-IA-1	R-A	R1.11	PIPE TO TEE	-	Y	-	-	-	A	IGSCC; (B-J/B9.11), PRR-10, I2P3
10R-IA-10	R-A	R1.20	PIPE TO ELBOW	-	Y	-	-	-	A	IGSCC; (B-J/B9.11), PRR-10
10R-IA-11	R-A	R1.20	ELBOW TO PIPE	-	Y	-	-	-	A	IGSCC; (B-J/B9.11), PRR-10
10R-IA-1A	R-A	R1.11	PIPE TO PIPE	-	Y	-	-	-	A	IGSCC; (B-J/B9.11), PRR-10
10R-IA-2	R-A	R1.11	ELBOW TO PIPE	-	Y	-	-	-	A	IGSCC; (B-J/B9.11), PRR-10, I2P3
10R-IA-3	R-A	R1.11	PIPE TO ELBOW	-	-	-	-	3	A	RI-ISI; IGSCC; (B-J, B9.11); I2P3, I3P3
10R-IA-4	R-A	R1.11	ELBOW TO PIPE	-	-	-	-	3	A	RI-ISI; IGSCC; (B-J, B9.11); I3P3
10R-IA-5	R-A	R1.11	VALVE TO ELBOW	-	Y	-	-	-	A	IGSCC; (B-J/B9.11), PRR-10, I2P2
10R-IA-6	R-A	R1.11	PIPE TO VALVE	-	-	-	-	3	A	RI-ISI; IGSCC; (B-J, B9.11); I2P3, I3P3
10R-IA-7	R-A	R1.11	VALVE TO PIPE	-	-	-	-	3	A	RI-ISI; IGSCC; (B-J, B9.11); I2P3, I3P3
10R-IA-8	R-A	R1.20	PIPE TO VALVE	-	Y	-	-	-	A	IGSCC; (B-J/B9.11), PRR-10, I2P3
10R-IA-9	R-A	R1.20	ELBOW TO PIPE	-	Y	-	-	-	A	IGSCC; (B-J/B9.11), PRR-10
10R-IB-1	R-A	R1.11	PIPE TO TEE	-	Y	-	-	-	A	IGSCC; (B-J/B9.11), PRR-10
10R-IB-10	R-A	R1.20	PIPE TO ELBOW	-	Y	-	-	-	A	IGSCC; (B-J/B9.11), PRR-10

COMPONENT IDENTIFICATION	ASME CODE CAT	ASME CODE ITEM	DESCRIPTION	ASME CODE EXAM	REL REQ	4TH ISI INTERVAL PER1	PER2	PER3	IGSCC CATEGORY	REMARKS
Residual Heat Removal System **Drawing Number: ISI-I-10-1** **Line Number: 18-DCA-10**										
10R-IB-11	R-A	R1.20	ELBOW TO PIPE	-	Y	-	-	-	A	IGSCC; (B-J/B9.11), PRR-10
10R-IB-15	R-A	B9.11	ELBOW TO PIPE	-	Y	-	-	-	A	IGSCC; (B-J/B9.11), PRR-10
10R-IB-2	R-A	R1.11	ELBOW TO PIPE	-	Y	-	-	-	A	IGSCC; (B-J/B9.11), PRR-10, I2P3
10R-IB-3	R-A	R1.11	PIPE TO ELBOW	-	Y	-	-	-	A	IGSCC; (B-J/B9.11), PRR-10, I2P3
10R-IB-4	R-A	R1.11	ELBOW TO PIPE	-	Y	-	-	-	A	IGSCC; (B-J/B9.11), PRR-10
10R-IB-5	R-A	R1.11	VALVE TO ELBOW	-	Y	-	-	-	A	IGSCC; (B-J/B9.11), PRR-10, I2P1, I3P1
10R-IB-6	R-A	R1.11	PIPE TO VALVE	-	Y	-	-	-	A	IGSCC; (B-J/B9.11), PRR-10, I2P3
10R-IB-9	R-A	R1.20	ELBOW TO PIPE	-	Y	-	-	-	A	IGSCC; (B-J/B9.11), PRR-10, I2P3
10R2-IB-7	R-A	R1.11	VALVE TO PIPE	-	Y	-	-	-	A	IGSCC; (B-J/B9.11), PRR-10
10R2-IB-8	R-A	R1.20	PIPE TO VALVE	-	Y	-	-	-	A	IGSCC; (B-J/B9.11), PRR-10
10R-IA-10ALD	N/A	N/A	LONG SEAM	-	Y	-	-	-	-	(B-J), PRR-10
10R-IA-10BLD	N/A	N/A	LONG SEAM	-	Y	-	-	-	-	(B-J), PRR-10
10R-IA-10LU	N/A	N/A	LONG SEAM	-	Y	-	-	-	-	(B-J), PRR-10
10R-IA-11ALU	N/A	N/A	LONG SEAM	-	Y	-	-	-	-	(B-J), PRR-10
10R-IA-11BLU	N/A	N/A	LONG SEAM	-	Y	-	-	-	-	(B-J), PRR-10
10R-IA-11LD	N/A	N/A	LONG SEAM	-	Y	-	-	-	-	(B-J), PRR-10
10R-IA-12ALD	N/A	N/A	LONG SEAM	-	Y	-	-	-	-	(B-J), PRR-10

COMPONENT IDENTIFICATION	ASME CODE CAT	ASME CODE ITEM	DESCRIPTION	ASME CODE EXAM	REL REQ	4TH ISI INTERVAL PER1	PER2	PER3	IGSCC CATEGORY	REMARKS
Residual Heat Removal System **Drawing Number: ISI-I-10-1** **Line Number: 18-DCA-10**										
10R-IA-12BLD	N/A	N/A	LONG SEAM	-	Y	-	-	-	-	(B-J), PRR-10
10R-IA-1A-LD	N/A	N/A	LONG SEAM	-	Y	-	-	-	-	(B-J), PRR-10
10R-IA-1A-LU	N/A	N/A	LONG SEAM	-	Y	-	-	-	-	(B-J), PRR-10
10R-IA-1LU	N/A	N/A	LONG SEAM	-	Y	-	-	-	-	(B-J), PRR-10
10R-IA-2ALU	N/A	N/A	LONG SEAM	-	Y	-	-	-	-	(B-J), PRR-10
10R-IA-2BLU	N/A	N/A	LONG SEAM	-	Y	-	-	-	-	(B-J), PRR-10
10R-IA-2LD	N/A	N/A	LONG SEAM	-	Y	-	-	-	-	(B-J), PRR-10
10R-IA-3ALD	N/A	N/A	LONG SEAM	-	Y	-	-	-	-	(B-J), PRR-10
10R-IA-3BLD	N/A	N/A	LONG SEAM	-	Y	-	-	-	-	(B-J), PRR-10
10R-IA-3LU	N/A	N/A	LONG SEAM	-	Y	-	-	-	-	(B-J), PRR-10
10R-IA-4ALU	N/A	N/A	LONG SEAM	-	Y	-	-	-	-	(B-J), PRR-10
10R-IA-4BLU	N/A	N/A	LONG SEAM	-	Y	-	-	-	-	(B-J), PRR-10
10R-IA-4LD	N/A	N/A	LONG SEAM	-	Y	-	-	-	-	(B-J), PRR-10
10R-IA-5ALD	N/A	N/A	LONG SEAM	-	Y	-	-	-	-	(B-J), PRR-10
10R-IA-5BLD	N/A	N/A	LONG SEAM	-	Y	-	-	-	-	(B-J), PRR-10
10R-IA-6LU	N/A	N/A	LONG SEAM	-	Y	-	-	-	-	(B-J), PRR-10
10R-IA-7LD	N/A	N/A	LONG SEAM	-	Y	-	-	-	-	(B-J), PRR-10

COMPONENT IDENTIFICATION	ASME CODE CAT	ASME CODE ITEM	DESCRIPTION	ASME CODE EXAM	REL REQ	4TH ISI INTERVAL PER1	PER2	PER3	IGSCC CATEGORY	REMARKS
Residual Heat Removal System **Drawing Number: ISI-I-10-1** **Line Number: 18-DCA-10**										
10R-IA-8LU	N/A	N/A	LONG SEAM	-	Y	-	-	-	-	(B-J), PRR-10
10R-IA-9ALU	N/A	N/A	LONG SEAM	-	Y	-	-	-	-	(B-J), PRR-10
10R-IA-9BLU	N/A	N/A	LONG SEAM	-	Y	-	-	-	-	(B-J), PRR-10
10R-IA-9LD	N/A	N/A	LONG SEAM	-	Y	-	-	-	-	(B-J), PRR-10
10R-IB-10ALD	N/A	N/A	LONG SEAM	-	Y	-	-	-	-	(B-J), PRR-10
10R-IB-10BLD	N/A	N/A	LONG SEAM	-	Y	-	-	-	-	(B-J), PRR-10
10R-IB-10LU	N/A	N/A	LONG SEAM	-	Y	-	-	-	-	(B-J), PRR-10
10R-IB-11ALU	N/A	N/A	LONG SEAM	-	Y	-	-	-	-	(B-J), PRR-10
10R-IB-11BLU	N/A	N/A	LONG SEAM	-	Y	-	-	-	-	(B-J), PRR-10
10R-IB-11LD	N/A	N/A	LONG SEAM	-	Y	-	-	-	-	(B-J), PRR-10
10R-IB-12ALD	N/A	N/A	LONG SEAM	-	Y	-	-	-	-	(B-J), PRR-10
10R-IB-12BLD	N/A	N/A	LONG SEAM	-	Y	-	-	-	-	(B-J), PRR-10
10R-IB-14LU	N/A	N/A	LONG SEAM	-	Y	-	-	-	-	(B-J), PRR-10
10R-IB-1LU	N/A	N/A	LONG SEAM	-	Y	-	-	-	-	(B-J), PRR-10
10R-IB-2ALU	N/A	N/A	LONG SEAM	-	Y	-	-	-	-	(B-J), PRR-10
10R-IB-2BLU	N/A	N/A	LONG SEAM	-	Y	-	-	-	-	(B-J), PRR-10
10R-IB-2LD	N/A	N/A	LONG SEAM	-	Y	-	-	-	-	(B-J), PRR-10
10R-IB-3ALD	N/A	N/A	LONG SEAM	-	Y	-	-	-	-	(B-J), PRR-10

COMPONENT IDENTIFICATION	ASME CODE CAT	ASME CODE ITEM	DESCRIPTION	ASME CODE EXAM	REL REQ	4TH ISI INTERVAL PER1	PER2	PER3	IGSCC CATEGORY	REMARKS
Residual Heat Removal System **Drawing Number: ISI-I-10-1** **Line Number: 18-DCA-10**										
10R-IB-3BLD	N/A	N/A	LONG SEAM	-	Y	-	-	-	-	(B-J), PRR-10
10R-IB-3LU	N/A	N/A	LONG SEAM	-	Y	-	-	-	-	(B-J), PRR-10
10R-IB-4ALU	N/A	N/A	LONG SEAM	-	Y	-	-	-	-	(B-J), PRR-10
10R-IB-4BLU	N/A	N/A	LONG SEAM	-	Y	-	-	-	-	(B-J), PRR-10
10R-IB-4LD	N/A	N/A	LONG SEAM	-	Y	-	-	-	-	(B-J), PRR-10
10R-IB-5ALD	N/A	N/A	LONG SEAM	-	Y	-	-	-	-	(B-J), PRR-10
10R-IB-5BLD	N/A	N/A	LONG SEAM	-	Y	-	-	-	-	(B-J), PRR-10
10R-IB-6LU	N/A	N/A	LONG SEAM	-	Y	-	-	-	-	(B-J), PRR-10
10R-IB-7LD	N/A	N/A	LONG SEAM	-	Y	-	-	-	-	(B-J), PRR-10
10R-IB-8LU	N/A	N/A	LONG SEAM	-	Y	-	-	-	-	(B-J), PRR-10
10R-IB-9ALU	N/A	N/A	LONG SEAM	-	Y	-	-	-	-	(B-J), PRR-10
10R-IB-9BLU	N/A	N/A	LONG SEAM	-	Y	-	-	-	-	(B-J), PRR-10
10R-IB-9LD	N/A	N/A	LONG SEAM	-	Y	-	-	-	-	(B-J), PRR-10
10R-IA-4PS	B-K	B10.20	PIPE STANCHION	-	-	-	-	-	-	H-10-1-175
10R-IA-8HL1(4)	B-K	B10.20	4 HANGER LUGS	-	-	-	-	-	-	H-10-1-174
10R-IA-8HL2(4)	B-K	B10.20	4 HANGER LUGS	-	-	-	-	-	-	H-10-1-173
10R-IB-4PS	B-K	B10.20	PIPE STANCHION	-	-	-	-	-	-	H-10-1-172
10R-IB-8HL1(4)	B-K	B10.20	4 HANGER LUGS	-	-	-	-	-	-	H-10-1-171
10R-IB-8HL2(4)	B-K	B10.20	SUPPORT LUGS	-	-	-	-	-	-	H-10-1-171

COMPONENT IDENTIFICATION	ASME CODE CAT	ASME CODE ITEM	DESCRIPTION	ASME CODE EXAM	REL REQ	4TH ISI INTERVAL PER1	PER2	PER3	IGSCC CATEGORY	REMARKS
Residual Heat Removal System **Drawing Number: ISI-I-10-1** **Line Number: 18-DCA-10**										
10R-IB-9PS	B-K	B10.20	PIPE STANCHION	-	-	-	-	-	-	H-10-1-170
10-VI-1001-33A	B-M-2	B12.50	VALVE INTERNALS	-	-	-	-	-	-	-
10-VI-1001-33B	B-M-2	B12.50	VALVE INTERNALS		-	-	-	-	-	-
10-VI-1001-68A	B-M-2	B12.50	VALVE INTERNALS	-	-	-	-	-	-	-
10-VI-1001-68B	B-M-2	B12.50	VALVE INTERNALS	-	-	-	-	-	-	-
H-10-1-170	F-A	F1.10-C	SPRING HANGER	-	-	-	-	-	-	10R-IB-9PS
H-10-1-171	F-A	F1.10-C	SPRING HANGER	-	-	-	-	-	-	10R-IB-8HL1(4)/ 10R-IB-8HL2(4)
H-10-1-172	F-A	F1.10-C	SPRING HANGER	-	-	-	-	-	-	10R-IB-4PS
H-10-1-173	F-A	F1.10-C	SPRING HANGER		-	-	-	-	-	10R-IA-8HL2(4)
H-10-1-174	F-A	F1.10-C	SPRING HANGER	-	-	-	-	-	-	10R-IA-8HL1(4)
H-10-1-175	F-A	F1.10-C	SPRING HANGER	-	-	-	-	3	-	I3P3, 10R-IA-4PS
H-10-1-SS17	N/A	N/A	SNUBBER	-	-	-	-	-	-	-
H-10-1-SS18	N/A	N/A	SNUBBER	-	-	-	-	-	-	-
H-10-1-SS19	N/A	N/A	SNUBBER	-	-	1	-	-	-	-
H-10-1-SS20	N/A	N/A	SNUBBER	-	-	-	-	-	-	-

COMPONENT IDENTIFICATION	ASME CODE CAT	ASME CODE ITEM	DESCRIPTION	ASME CODE EXAM	REL REQ	4TH ISI INTERVAL PER1	PER2	PER3	IGSCC CATEGORY	REMARKS
Residual Heat Removal System **Drawing Number: ISI-I-10-1** **Line Number: 18-DC/DCA-10**										
10R-IA-12	R-A	R1.20	PENETRATION TO ELBOW	-	Y	-	-	-	D	IGSCC; (B-J, B9.11), PRR-10
10R-IB-12	R-A	R1.20	PENETRATION TO ELBOW	-	Y	-	-	-	D	IGSCC; (B-J, B9.11), PRR-10
10R-IB-16R	R-A	R1.20	VALVE TO ELBOW	-	Y	-	-	-	A	IGSCC; (B-J, B9.11), PRR-10
10R-IB-14	R-A	R1.20	PIPE TO FLUED HEAD	-	-	1	-	-	A	RI-ISI; IGSCC; (B-J, B9.11)

COMPONENT IDENTIFICATION	ASME CODE CAT	ASME CODE ITEM	DESCRIPTION	ASME CODE EXAM	REL REQ	4TH ISI INTERVAL PER1	PER2	PER3	IGSCC CATEGORY	REMARKS
Residual Heat Removal System **Drawing Number: ISI-I-10-1** **Line Number: N/A**										
10R-IB-15ALU	N/A	N/A	LONG SEAM	-	Y	-	-	-	-	(B-J/B9.12), PRR-10
10R-IB-15BLU	N/A	N/A	LONG SEAM	-	Y	-	-	-	-	(B-J/B9.12), PRR-10
10R-IB-15LD	N/A	N/A	LONG SEAM	-	Y	-	-	-	-	(B-J/B9.12), PRR-10
10R-IB-16ALD	N/A	N/A	LONG SEAM	-	Y	-	-	-	-	(B-J/B9.12), PRR-10
10R-IB-16BLD	N/A	N/A	LONG SEAM	-	Y	-	-	-	-	(B-J/B9.12), PRR-10
H-10-1-X51A	F-A	F1.10-B	ANCHOR	-	-	-	-	3	-	I3P3

COMPONENT IDENTIFICATION	ASME CODE CAT	ASME CODE ITEM	DESCRIPTION	ASME CODE EXAM	REL REQ	4TH ISI INTERVAL PER1	PER2	PER3	IGSCC CATEGORY	REMARKS
Residual Heat Removal System										
Drawing Number: ISI-E207A										
Line Number: RHR Heat Exchanger [A]										
10-E207A-1	C-A	C1.10	SHELL TO FLANGE	-	Y	1	-	-	-	PRR-8
10-E207A-2	C-A	C1.10	SHELL CIRC WELD	-	Y	-	2	-	-	EXEMPT, PRR-8
10-E207A-3	C-A	C1.10	SHELL TO FLANGE	-	Y	-	-	3	-	PRR-8
10-E207A-4	C-A	C1.20	HEAD TO FLANGE	-	Y	1	-	-	-	PRR-8
10-E207A-5	C-A	C1.20	HEAD CIRC WELD	-	Y	-	-	3	-	PRR-8
10-E207A-N3-2	C-B	C2.31	SHELL REINF PLATE	-	-	-	-	-	-	-
10-E207A-N3-3	C-B	C2.31	NOZZLE REINF PLATE	-	-	-	-	-	-	-
10-E207A-N4-2	C-B	C2.31	SHELL REINF PLATE	-	-	-	-	-	-	-
10-E207A-N4-3	C-B	C2.31	NOZZLE REINF PLATE	-	-	-	-	-	-	-
10-E207A-N3-1	C-B	C2.33	NOZZLE TO SHELL WELD	-	-	-	-	-	-	-
10-E207A-N4-1	C-B	C2.33	NOZZLE TO SHELL WELD	-	-	-	-	-	-	-
10-E207A-S1	C-C	C3.10	HX SUPPORT	-	-	-	-	-	-	H-10-1-E207A-S1
10-E207A-S2	C-C	C3.10	HX SUPPORT	-	-	-	-	-	-	H-10-1-E207A-S2
10-E207A-S3	C-C	C3.10	HX SUPPORT	-	-	-	-	-	-	H-10-1-E207A-S3
10-E207A-S4	C-C	C3.10	HX SUPPORT	-	-	-	-	-	-	H-10-1-E207A-S4
H-10-1-E207A-S1	**F-A**	**F1.40**	**HX SUPPORT**	-	-	-	-	-	-	**10-E207A-S1**
H-10-1-E207A-S2	**F-A**	**F1.40**	**HX SUPPORT**	-	-	-	-	-	-	**10-E207A-S2**
H-10-1-E207A-S3	**F-A**	**F1.40**	**HX SUPPORT**	-	-	-	-	-	-	**10-E207A-S3**
H-10-1-E207A-S4	**F-A**	**F1.40**	**HX SUPPORT**	-	-	-	-	-	-	**10-E207A-S4**

COMPONENT IDENTIFICATION	ASME CODE CAT	ASME CODE ITEM	DESCRIPTION	ASME CODE EXAM	REL REQ	4TH ISI INTERVAL PER1	PER2	PER3	IGSCC CATEGORY	REMARKS
Residual Heat Removal System **Drawing Number: ISI-E207B** **Line Number: RHR Heat Exchanger [B]**										
10-E207B-1	C-A	C1.10	SHELL TO FLANGE	-	Y	-	-	-	-	PRR-8
10-E207B-2	C-A	C1.10	SHELL CIRC WELD	-	Y	-	-	-	-	EXEMPT, PRR-8
10-E207B-3	C-A	C1.10	SHELL TO FLANGE	-	Y	-	-	-	-	PRR-8
10-E207B-4	C-A	C1.20	HEAD TO FLANGE	-	Y	-	-	-	-	PRR-8
10-E207B-5	C-A	C1.20	HEAD CIRC WELD	-	Y	-	-	-	-	PRR-8
10-E207B-N3-2	C-B	C2.31	SHELL REINF PLATE	-	-	-	2	-	-	-
10-E207B-N3-3	C-B	C2.31	NOZZLE REINF PLATE	-	-	-	2	-	-	-
10-E207B-N4-2	C-B	C2.31	SHELL REINF PLATE	-	-	-	-	3	-	-
10-E207B-N4-3	C-B	C2.31	NOZZLE REINF PLATE	-	-	-	-	3	-	-
10-E207B-N3-1	C-B	C2.33	NOZZLE TO SHELL WELD	-	-	1	-	-	-	-
10-E207B-N4-1	C-B	C2.33	NOZZLE TO SHELL WELD	-	-	1	-	-	-	-
10-E207B-S1	C-C	C3.10	HX SUPPORT	-	-	-	-	-	-	H-10-1-E207B-S1
10-E207B-S2	C-C	C3.10	HX SUPPORT	-	-	-	-	-	-	H-10-1-E207B-S2
10-E207B-S3	C-C	C3.10	HX SUPPORT	-	-	-	-	-	-	H-10-1-E207B-S3
10-E207B-S4	C-C	C3.10	HX SUPPORT	-	-	-	-	-	-	H-10-1-E207B-S4
H-10-1-E207B-S1	**F-A**	**F1.40**	**HX SUPPORT**	-	-	-	-	-	-	**10-E207B-S1**
H-10-1-E207B-S2	**F-A**	**F1.40**	**HX SUPPORT**	-	-	-	-	-	-	**10-E207B-S2**
H-10-1-E207B-S3	**F-A**	**F1.40**	**HX SUPPORT**	-	-	-	-	-	-	**10-E207B-S3**
H-10-1-E207B-S4	**F-A**	**F1.40**	**HX SUPPORT**	-	-	-	-	-	-	**10-E207B-S4**

COMPONENT IDENTIFICATION	ASME CODE CAT	ASME CODE ITEM	DESCRIPTION	ASME CODE EXAM	REL REQ	4TH ISI INTERVAL PER1	PER2	PER3	IGSCC CATEGORY	REMARKS
Residual Heat Removal System										
Drawing Number: ISI-I-10-3A										
Line Number: N/A										
GB-10-133HL1(8)	C-C	C3.20	HANGER LUGS	-	-	-	-	-	-	-

COMPONENT IDENTIFICATION	ASME CODE CAT	ASME CODE ITEM	DESCRIPTION	ASME CODE EXAM	REL REQ	4TH ISI INTERVAL PER1	PER2	PER3	IGSCC CATEGORY	REMARKS
Residual Heat Removal System **Drawing Number: ISI-I-10-3A** **Line Number: 12-GB-10**										
GB-10-120HL1(8)	C-C	C3.20	SUPPORT LUGS	-	-	-	-	-	-	H-10-1-SG22
GB-10-122PS	C-C	C3.20	PIPE STANCHION	-	-	-	-	-	-	H-10-1-2SS
GB-10-133PS	C-C	C3.20	PIPE STANCHION	-	-	-	-	-	-	H-10-1-3SS
GB-10-17-3C-B	C-F-2	C5.51	PIPE TO ELBOW	-	Y	-	-	-	-	PRR-8
GB-10-F123	C-F-2	C5.51	ELBOW TO VALVE	-	Y	-	-	-	-	PRR-8
GB-10-F122	C-F-2	C5.51	VALVE TO ELBOW	-	Y	-	-	-	-	PRR-8
GB-10-F121	C-F-2	C5.51	ELBOW TO VALVE	-	Y	-	-	-		PRR-8
GB-10-F120	C-F-2	C5.51	VALVE TO PIPE	-	Y	-	-	-	-	PRR-8
GB-10-18-4B	C-F-2	C5.51	PIPE TO WELDOLET	-	Y	1	-	-	-	PRR-8, I3P1
GB-10-18-3C-B	C-F-2	C5.51	PIPE TO ELBOW	-	Y	-	-	-	-	PRR-8
GB-10-18-1E	C-F-2	C5.51	PIPE TO ELBOW	-	Y	-	-	-	-	PRR-8
GB-10-F131	C-F-2	C5.51	VALVE TO PIPE	-	Y	-	-	-	-	PRR-8
GB-10-17-3A-F	C-F-2	C5.51	PIPE TO REDUCER	-	Y	-	-	-	-	PRR-8
GB-10-17-3A-E	C-F-2	C5.51	ELBOW TO PIPE	-	Y	-	-	-	-	PRR-8
GB-10-17-3A-D	C-F-2	C5.51	PIPE TO ELBOW	-	Y	-	-	-	-	PRR-8
GB-10-17-1D	C-F-2	C5.51	PIPE TO ELBOW	-	Y	-	-	-	-	PRR-8
GB-10-18-3A-D	C-F-2	C5.51	PIPE TO ELBOW	-	Y	-	-	-	-	PRR-8
GB-10-F228	C-F-2	C5.51	ELBOW TO PIPE	-	Y	-	-	-	-	PRR-8

COMPONENT IDENTIFICATION	ASME CODE CAT	ASME CODE ITEM	DESCRIPTION	ASME CODE EXAM	REL REQ	4TH ISI INTERVAL PER1	PER2	PER3	IGSCC CATEGORY	REMARKS
Residual Heat Removal System **Drawing Number: ISI-I-10-3A** **Line Number: 12-GB-10**										
GB-10-F124	C-F-2	C5.51	PUMP TO PIPE	-	Y	-	2	-	-	PRR-8, I3P2
GB-10-F229	C-F-2	C5.51	PIPE TO PIPE	-	Y	-	-	-	-	PRR-8
GB-10-F130	C-F-2	C5.51	ELBOW TO PIPE	-	Y	-	-	-	-	PRR-8
GB-10-F227	C-F-2	C5.51	PIPE TO PIPE	-	Y	-	-	-	-	PRR-8
GB-10-F226	C-F-2	C5.51	ELBOW TO PIPE	-	Y	-	-	-	-	PRR-8
GB-10-F135	C-F-2	C5.51	PIPE TO PIPE	-	Y	-	-	-	-	PRR-8
GB-10-F134	C-F-2	C5.51	ELBOW TO VALVE	-	Y	-	-	-	-	PRR-8
GB-10-F133	C-F-2	C5.51	VALVE TO ELBOW	-	Y	-	-	-	-	PRR-8
GB-10-F132	C-F-2	C5.51	ELBOW TO VALVE	-	Y	-	-	-	-	PRR-8
GB-10-VBW67A-1	C-G	C6.20	VALVE BODY WELD	-	-	-	-	-	-	-
GB-10-VBW67A-2	C-G	C6.20	VALVE BODY WELD	-	-	-	-	-	-	-
GB-10-VBW67C-1	C-G	C6.20	VALVE BODY WELD	-	-	-	2	-	-	-
GB-10-VBW67C-2	C-G	C6.20	VALVE BODY WELD	-	-	-	2	-	-	-
H-10-1-SG22	F-A	F1.20-B	LATERAL RESTRAINT	-	-	-	-	-	-	GB-10-120HL1(8)
H-10-1-SG23	F-A	F1.20-B	LATERAL RESTRAINT	-	-	-	-	-	-	-
H-10-1-2SS	F-A	F1.20-C	SPRING SUPPORT	-	-	-	-	-	-	GB-10-122PS
H-10-1-3SS	F-A	F1.20-C	SPRING HANGER	-	-	-	-	-	-	GB-10-133PS
GB-10-131HL1(8)	N/A	N/A	SUPPORT LUGS	-	-	-	-	-	-	LUGS ABANDONED IN PLACE

COMPONENT IDENTIFICATION	ASME CODE CAT	ASME CODE ITEM	DESCRIPTION	ASME CODE EXAM	REL REQ	4TH ISI INTERVAL PER1	PER2	PER3	IGSCC CATEGORY	REMARKS
Residual Heat Removal System **Drawing Number: ISI-I-10-3A** **Line Number: 16-GB-10**										
GB-10-F116	C-F-2	C5.51	VALVE TO TEE	-	Y	-	-	3	-	PRR-8, I3P3
GB-10-18-4F	C-F-2	C5.51	REDUCER TO PIPE	-	Y	-	-	-	-	PRR-8
GB-10-18-5B	C-F-2	C5.51	ELBOW TO PIPE	-	Y	-	-	-	-	PRR-8
GB-10-18-5C	C-F-2	C5.51	PIPE TO ELBOW	-	Y	-	-	-	-	PRR-8
GB-10-18-6C	C-F-2	C5.51	PIPE TO ELBOW	-	Y	-	-	-	-	PRR-8
GB-10-18-6D	C-F-2	C5.51	ELBOW TO PIPE	-	Y	-	-	-	-	PRR-8
GB-10-18-6E	C-F-2	C5.51	PIPE TO ELBOW	-	Y	-	-	-	-	PRR-8
GB-10-18-6F	C-F-2	C5.51	ELBOW TO PIPE	-	Y	-	-	-	-	PRR-8
GB-10-17-5A-C	C-F-2	C5.51	ELBOW TO PIPE	-	Y	-	-	-	-	PRR-8
GB-10-F115	C-F-2	C5.51	PIPE TO VALVE	-	Y	-	-	-	-	PRR-8
GB-10-F126	C-F-2	C5.51	PIPE TO ELBOW	-	Y	-	-	-	-	PRR-8
GB-10-F127	C-F-2	C5.51	PIPE TO VALVE	-	Y	-	-	-	-	PRR-8
GB-10-F128	C-F-2	C5.51	VALVE TO PIPE	-	Y	-	-	-	-	PRR-8
GB-10-F129R	C-F-2	C5.51	PIPE TO HX	-	Y	-	2	-	-	PRR-8, I3P2
GB-10-F248	C-F-2	C5.51	PIPE TO ELBOW	-	Y	-	-	-	-	PRR-8
GB-10-F114	C-F-2	C5.51	PIPE TO HX	-	Y	-	-	-	-	PRR-8

COMPONENT IDENTIFICATION	ASME CODE CAT	ASME CODE ITEM	DESCRIPTION	ASME CODE EXAM	REL REQ	4TH ISI INTERVAL PER1	PER2	PER3	IGSCC CATEGORY	REMARKS
Residual Heat Removal System **Drawing Number: ISI-I-10-3A** **Line Number: 16-GB-10**										
H-10-1-SS25	N/A	N/A	SNUBBER	-	-	-	-	-	-	-
H-10-1-144	F-A	F1.20-C	SPRING HANGER	-	-	-	-	-	-	-
H-10-1-145	F-A	F1.20-C	SPRING HANGER	-	-	-	-	-	-	-

COMPONENT IDENTIFICATION	ASME CODE CAT	ASME CODE ITEM	DESCRIPTION	ASME CODE EXAM	REL REQ	4TH ISI INTERVAL PER1	PER2	PER3	IGSCC CATEGORY	REMARKS
Residual Heat Removal System **Drawing Number: ISI-I-10-3A** **Line Number: 18-GB-10**										
GB-10-226PS	C-C	C3.20	PIPE STANCHION	-	-	-	-	-	-	H-10-1-4SR
GB-10-117PS	C-C	C3.20	PIPE STANCHION	-	-	-	-	-	-	H-10-1-5SS
GB-10-F117	C-F-2	C5.51	VALVE TO ELBOW	-	Y	-	-	-	-	PRR-8
GB-10-17-3A-G	C-F-2	C5.51	REDUCER TO TEE	-	Y	-	-	-	-	PRR-8
GB-10-17-3A-I	C-F-2	C5.51	TEE TO PIPE	-	Y	1	-	-	-	PRR-8, I3P1
GB-10-17-4C	C-F-2	C5.51	ELBOW TO PIPE	-	Y	-	-	-	-	PRR-8
GB-10-17-4D	C-F-2	C5.51	PIPE TO TEE	-	Y	-	-	-	-	PRR-8
GB-10-17-4F	C-F-2	C5.51	TEE TO PIPE	-	Y	-	-	-	-	PRR-8
GB-10-18-4E	C-F-2	C5.51	PIPE TO REDUCER	-	Y	-	2	-	-	PRR-8, I3P2
GB-10-F118	C-F-2	C5.51	PIPE TO VALVE	-	Y	-	-	-	-	PRR-8
GB-10-F119	C-F-2	C5.51	TEE TO PIPE	-	Y	-	-	-	-	PRR-8
GB-10-18-4C	C-F-2	C5.51	WELDOLET TO PIPE	-	-	-	-	-	-	-
GB-10-17-4G	C-F-2	C5.51	PIPE TO ELBOW	-	Y	-	-	-	-	PRR-8
H-10-1-990	F-A	F1.20-C	SPRING HANGER	-	-	-	-	-	-	-
H-10-1-142	F-A	F1.20-A	RIGID HANGER	-	-	-	-	-	-	-
H-10-1-4SR	F-A	F1.20-B	LATERAL RESTRAINT	-	-	-	-	-	-	GB-10-226PS
H-10-1-SR24	F-A	F1.20-B	GUIDE	-	-	-	-	-	-	GB-10-117HL1(4)
GB-10-117HL1(4)	C-C	C3.20	SUPPORT LUGS	-	-	-	-	-	-	H-10-1-SR24
H-10-1-5SS	F-A	F1.20-C	SPRING SUPPORT	-	-	-	-	-	-	GB-10-117PS

COMPONENT IDENTIFICATION	ASME CODE CAT	ASME CODE ITEM	DESCRIPTION	ASME CODE EXAM	REL REQ	4TH ISI INTERVAL PER1	PER2	PER3	IGSCC CATEGORY	REMARKS
Residual Heat Removal System										
Drawing Number: ISI-I-10-4BSH1										
Line Number: 6-GB-10										
GB-10-F181A	C-F-2	C5.51	PIPE TO VALVE	-	-	-	-	-	-	PRR-8
GB-10-F181	C-F-2	C5.51	TEE TO PIPE	-	-	-	-	-	-	PRR-8

COMPONENT IDENTIFICATION	ASME CODE CAT	ASME CODE ITEM	DESCRIPTION	ASME CODE EXAM	REL REQ	4TH ISI INTERVAL PER1	PER2	PER3	IGSCC CATEGORY	REMARKS
Residual Heat Removal System **Drawing Number: ISI-I-10-4BSH1** **Line Number: 18-GB-10**										
GB-10-19HL1(4)	C-C	C3.20	SUPPORT LUGS	-	-	-	-	-	-	H-10-1-107S
GB-10-52PS	C-C	C3.20	PIPE STANCHION	-	-	-	-	-	-	H-10-1-34SA
GB-10-12HL1(4)	C-C	C3.20	SUPPORT LUGS	-	-	-	-	-	-	H-10-1-179
GB-10-9-2G	C-F-2	C5.51	ELBOW TO PIPE	-	Y	-	-	-	-	PRR-8
GB-10-6-4H	C-F-2	C5.51	TEE TO PIPE	-	Y	-	-	-	-	PRR-8
GB-10-7-1C	C-F-2	C5.51	PIPE TO ELBOW	-	Y	-	-	-	-	PRR-8
GB-10-7-1D	C-F-2	C5.51	ELBOW TO PIPE	-	Y	-	-	-	-	PRR-8
GB-10-7-1E	C-F-2	C5.51	PIPE TO ELBOW	-	Y	-	-	-	-	PRR-8
GB-10-7-1F	C-F-2	C5.51	ELBOW TO PIPE	-	Y	-	-	-	-	PRR-8
GB-10-7-1G	C-F-2	C5.51	PIPE TO ELBOW	-	Y	-	-	-	-	PRR-8
GB-10-7-2C	C-F-2	C5.51	PIPE TO ELBOW	-	Y	-	-	-	-	PRR-8
GB-10-9-1B	C-F-2	C5.51	ELBOW TO PIPE	-	Y	-	-	-	-	PRR-8
GB-10-9-1C	C-F-2	C5.51	ELBOW TO PIPE	-	Y		-	-	-	PRR-8
GB-10-9-2F	C-F-2	C5.51	WELDOLET TO ELBOW	-	Y	-	-	-	-	PRR-8
GB-10-6-4D	C-F-2	C5.51	ELBOW TO PIPE	-	Y	-	-	-	-	PRR-8
GB-10-9-2H	C-F-2	C5.51	PIPE TO ELBOW	-	Y	-	-	-	-	PRR-8
GB-10-9-3B	C-F-2	C5.51	PIPE TO PIPE	-	Y	-	-	-	-	PRR-8
GB-10-9-4A-B	C-F-2	C5.51	ELBOW TO PIPE	-	Y	-	-	-	-	PRR-8
GB-10-9-4C-C	C-F-2	C5.51	PIPE TO ELBOW	-	Y	-	-	-	-	PRR-8

COMPONENT IDENTIFICATION	ASME CODE CAT	ASME CODE ITEM	DESCRIPTION	ASME CODE EXAM	REL REQ	4TH ISI INTERVAL PER1	PER2	PER3	IGSCC CATEGORY	REMARKS
Residual Heat Removal System **Drawing Number: ISI-I-10-4BSH1** **Line Number: 18-GB-10**										
GB-10-F12	C-F-2	C5.51	ELBOW TO PIPE	-	Y	-	-	-	-	PRR-8
GB-10-F13	C-F-2	C5.51	PIPE TO ELBOW	-	Y	-	-	-	-	PRR-8
GB-10-F14	C-F-2	C5.51	ELBOW TO PIPE	-	Y	-	-	-	-	PRR-8
GB-10-F15	C-F-2	C5.51	PIPE TO WELDOLET	-	Y	-	-	-	-	PRR-8
GB-10-9-2E	C-F-2	C5.51	WELDOLET	-	Y	-	-	3	-	PRR-8, I3P3
GB-10-4-5B	C-F-2	C5.51	PIPE TO ELBOW	-	Y	-	-	-	-	PRR-8
GB-10-15-1C	C-F-2	C5.51	REDUCER TO TEE	-	Y	-	-	-	-	PRR-8
GB-10-15-1E	C-F-2	C5.51	TEE TO TEE	-	Y	-	2	-	-	PRR-8, I3P2
GB-10-15-2B	C-F-2	C5.51	PIPE TO ELBOW	-	Y	-	-	-	-	PRR-8
GB-10-15-3B	C-F-2	C5.51	ELBOW TO PIPE	-	Y	-	-	-	-	PRR-8
GB-10-15-3C	C-F-2	C5.51	PIPE TO ELBOW	-	Y	-	-	-	-	PRR-8
GB-10-4-1B	C-F-2	C5.51	PIPE TO ELBOW	-	Y	-	-	-	-	PRR-8
GB-10-4-1C	C-F-2	C5.51	ELBOW TO PIPE	-	Y	-	-	-	-	PRR-8
GB-10-4-2B	C-F-2	C5.51	ELBOW TO PIPE	-	Y	-	-	-	-	PRR-8
GB-10-6-4F	C-F-2	C5.51	ELBOW TO TEE	-	Y	-	-	-	-	PRR-8
GB-10-4-4D	C-F-2	C5.51	PIPE TO ELBOW	-	Y	-	-	-	-	PRR-8
GB-10-6-4E	C-F-2	C5.51	PIPE TO ELBOW	-	Y	-	-	-	-	PRR-8
GB-10-4-5C	C-F-2	C5.51	ELBOW TO TEE	-	Y	-	-	-	-	PRR-8
GB-10-4-5D	C-F-2	C5.51	TEE TO PIPE	-	Y	-	-	-	-	PRR-8

COMPONENT IDENTIFICATION	ASME CODE CAT	ASME CODE ITEM	DESCRIPTION	ASME CODE EXAM	REL REQ	4TH ISI INTERVAL PER1	PER2	PER3	IGSCC CATEGORY	REMARKS
Residual Heat Removal System **Drawing Number: ISI-I-10-4BSH1** **Line Number: 18-GB-10**										
GB-10-4-5H	C-F-2	C5.51	TEE TO PIPE	-	Y	-	-	-	-	PRR-8
GB-10-6-1B	C-F-2	C5.51	PIPE TO ELBOW	-	Y	-	-	-	-	PRR-8
GB-10-6-1C	C-F-2	C5.51	ELBOW TO PIPE	-	Y	-	-	-	-	PRR-8
GB-10-6-2B	C-F-2	C5.51	ELBOW TO PIPE	-	Y	-	-	-	-	PRR-8
GB-10-6-4B	C-F-2	C5.51	ELBOW TO PIPE	-	Y	-	-	-	-	PRR-8
GB-10-6-4C	C-F-2	C5.51	PIPE TO ELBOW	-	Y	-	-	-	-	PRR-8
GB-10-F179	C-F-2	C5.51	VALVE TO PIPE	-	Y	-	-	3	-	PRR-8, I3P3
GB-10-4-2C	C-F-2	C5.51	PIPE TO ELBOW	-	Y	-	-	-	-	PRR-8
GB-10-F54	C-F-2	C5.51	PIPE TO ELBOW	-	Y	-	-	-	-	PRR-8
GB-10-F16	C-F-2	C5.51	PIPE TO PIPE	-	Y	-	-	-	-	PRR-8
GB-10-F17	C-F-2	C5.51	PIPE TO ELBOW	-	Y	-	-	-	-	PRR-8, I3P3
GB-10-F71	C-F-2	C5.51	ELBOW TO PIPE	-	Y	-	-	-	-	PRR-8
GB-10-F70	C-F-2	C5.51	ELBOW TO TEE	-	Y	-	-	3	-	PRR-8, I3P3
GB-10-F55	C-F-2	C5.51	PIPE TO PIPE	-	Y	-	-	-	-	PRR-8
GB-10-F53	C-F-2	C5.51	PIPE TO PIPE	-	Y	-	-	-	-	PRR-8
GB-10-F52A	C-F-2	C5.51	PIPE TO ELBOW	-	Y	-	-	-	-	PRR-8, I3P3
GB-10-F52	C-F-2	C5.51	PIPE TO VALVE	-	Y	-	-	-	-	PRR-8
GB-10-F51	C-F-2	C5.51	ELBOW TO PIPE	-	Y	-	-	-	-	PRR-8
GB-10-F274	C-F-2	C5.51	PIPE TO PIPE	-	Y	-	-	-	-	PRR-8

COMPONENT IDENTIFICATION	ASME CODE CAT	ASME CODE ITEM	DESCRIPTION	ASME CODE EXAM	REL REQ	4TH ISI INTERVAL PER1	PER2	PER3	IGSCC CATEGORY	REMARKS
Residual Heat Removal System **Drawing Number: ISI-I-10-4BSH1** **Line Number: 18-GB-10**										
GB-10-F183	C-F-2	C5.51	VALVE TO ELBOW	-	Y	-	-	-	-	PRR-8
GB-10-F56	C-F-2	C5.51	PIPE TO TEE	-	Y	-	-	-	-	PRR-8
GB-10-F273	C-F-2	C5.51	PIPE TO PIPE	-	Y	-	-	-	-	PRR-8
GB-10-F182	C-F-2	C5.51	TEE TO VALVE	-	Y	-	-	-	-	PRR-8
GB-10-F180	C-F-2	C5.51	PIPE TO VALVE	-	Y	-	-	-	-	PRR-8
GB-10-F19	C-F-2	C5.51	ELBOW TO PIPE	-	Y	-	-	-	-	PRR-8
GB-10-F20	C-F-2	C5.51	PIPE TO PIPE	-	Y	-	-	-	-	PRR-8
GB-10-F21	C-F-2	C5.51	ELBOW TO PIPE	-	Y	-	-	-	-	PRR-8
GB-10-F22	C-F-2	C5.51	PIPE TO ELBOW	-	Y	-	-	-	-	PRR-8
GB-10-F23	C-F-2	C5.51	ELBOW TO PIPE	-	Y	-	-	-	-	PRR-8
H-10-1-131	F-A	F1.20-B	RIGID HANGER	-	-	-	-	-	-	GB-10-131PS1
GB-10-131PS1	**C-C**	**C3.20**	**WELDED ATTACHMENT**	-	-	-	-	-	-	**H-10-1-131**
H-10-1-112S	N/A	N/A	SNUBBER	-	-	-	-	-	-	-
H-10-1-38SR	F-A	F1.20-B	LATERAL RESTRAINT	-	-	-	-	-	-	-
H-10-1-65SA	F-A	F1.20-B	ANCHOR	-	-	-	-	-	-	GB-10-43PS
GB-10-43PS	C-C	C3.20	PIPE STANCHION	-	-	-	-	-	-	H-10-1-65SA
H-10-1-97	F-A	F1.20-B	RIGID HANGER	-	-	-	-	-	-	-
H-10-1-34SA	F-A	F1.20-B	ANCHOR	-	-	-	-	-	-	GB-10-52PS
H-10-1-179	F-A	F1.20-C	SPRING HANGER	-	-	-	-	-	-	GB-10-12HL1(4)

COMPONENT IDENTIFICATION	ASME CODE CAT	ASME CODE ITEM	DESCRIPTION	ASME CODE EXAM	REL REQ	4TH ISI INTERVAL PER1	PER2	PER3	IGSCC CATEGORY	REMARKS
Residual Heat Removal System **Drawing Number: ISI-I-10-4BSH1** **Line Number: 18-GB-10**										
H-10-1-82	F-A	F1.20-C	SPRING HANGER	-	-	-	-	-	-	-
H-10-1-88	F-A	F1.20-C	SPRING HANGER	-	-	-	-	-	-	-
H-10-1-87	F-A	F1.20-C	SPRING HANGER	-	-	-	-	-	-	-
H-10-1-120SR	F-A	F1.20-B	LATERAL RESTRAINT	-	-	-	-	-	-	-
H-10-1-111S	F-A	F1.20-A	RIGID HANGER	-	-	-	-	-	-	-
H-10-1-85	F-A	F1.20-C	SPRING HANGER	-	-	-	-	-	-	-
H-10-1-113S	F-A	F1.20-B	LATERAL RESTRAINT	-	-	-	-	-	-	GB-10-113PS1
GB-10-113PS1	**C-C**	**C3.20**	**WELDED ATTACHMENT**	-	-	-	-	-	-	**H-10-1-113S**
H-10-1-109S	F-A	F1.20-B	LATERAL RESTRAINT	-	-	-	-	-	-	GB-10-109PS1
GB-10-109PS1	**C-C**	**C3.20**	**WELDED ATTACHMENT**	-	-	-	-	-	-	**H-10-1-109S**
H-10-1-108S	F-A	F1.20-B	LATERAL RESTRAINT	-	-	-	-	-	-	-
H-10-1-107S	F-A	F1.20-B	RIGID HANGER	-	-	-	-	-	-	GB-10-19HL1(4)
H-10-1-106S	F-A	F1.20-B	LATERAL RESTRAINT	-	-	-	-	-	-	-
H-10-1-94	F-A	F1.20-A	LATERAL RESTRAINT	-	-	-	-	-	-	-
H-10-1-93	F-A	F1.20-A	LATERAL RESTRAINT	-	-	-	-	-	-	-
H-10-1-91	F-A	F1.20-A	LATERAL RESTRAINT	-	-	-	-	-	-	-
H-10-1-81	F-A	F1.20-A	LATERAL RESTRAINT	-	-	-	-	-	-	-
H-10-1-37SH	F-A	F1.20-A	LATERAL RESTRAINT	-	-	-	-	-	-	-
H-10-1-110S	F-A	F1.20-A	LATERAL RESTRAINT	-	-	-	-	-	-	-

COMPONENT IDENTIFICATION	ASME CODE CAT	ASME CODE ITEM	DESCRIPTION	ASME CODE EXAM	REL REQ	4TH ISI INTERVAL PER1	PER2	PER3	IGSCC CATEGORY	REMARKS
Residual Heat Removal System										
Drawing Number: ISI-I-10-4BSH1										
Line Number: 18-GB-10										
H-10-1-90	F-A	F1.20-C	SPRING HANGER	-	-	-	-	-	-	-
H-10-1-80	F-A	F1.20-A	LATERAL RESTRAINT	-	-	-	-	-	-	-
Line Number: 12-GB-10										
GB-10-44PS	C-C	C3.20	PIPE STANCHION	-	-	-	-	-	-	H-10-1-129
GB-10-F24	C-F-2	C5.51	PIPE TO ELBOW	-	Y	-	-	-	-	PRR-8
GB-10-F43	C-F-2	C5.51	PIPE TO ELBOW	-	Y	-	-	-	-	PRR-8
GB-10-15-1B	C-F-2	C5.51	ELBOW TO REDUCER	-	Y	-	-	-	-	PRR-8
H-10-1-129	F-A	F1.20-B	RIGID HANGER	-	-	-	-	-	-	GB-10-44PS

COMPONENT IDENTIFICATION	ASME CODE CAT	ASME CODE ITEM	DESCRIPTION	ASME CODE EXAM	REL REQ	4TH ISI INTERVAL PER1	PER2	PER3	IGSCC CATEGORY	REMARKS
Residual Heat Removal System **Drawing Number: ISI-I-10-4BSH1** **Line Number: N/A**										
GB-10-19PS	C-C	C3.20	PIPE STANCHION	-	-	-	-	-	-	-
SLT RHR-3	C-H	C7.10	PRESSURE BOUNDARY	VT-2	-	1	2	3	-	-
SLT RHR-4	C-H	C7.10	PRESSURE BOUNDARY	VT-2	-	1	2	3	-	-
GB-10-F236B	N/A	N/A	ELBOW TO PIPE	-	-	-	-	-	-	F236B IS WRONG ID PER DR#1887 RESPONSE; ACTUAL WELD IS SHOP WELD 20-4B; FORMERLY GB-10-20-4B
10-VI-1001-28B	N/A	N/A	VALVE INTERNALS	-	-	-	-	-	-	EXAM NOT REQ'D BY ASME XI

COMPONENT IDENTIFICATION	ASME CODE CAT	ASME CODE ITEM	DESCRIPTION	ASME CODE EXAM	REL REQ	4TH ISI INTERVAL PER1	PER2	PER3	IGSCC CATEGORY	REMARKS
Residual Heat Removal System **Drawing Number: ISI-I-10-4BSH1** **Line Number: 18-DB/DC-10**										
DB/DC-10-3001	C-F-1	C5.11	ELBOW TO PIPE	-	Y	-	-	3	-	PRR-8, I2P2, I3P2
Line Number: 18-DB-10										
DB-10-F51	C-F-2	C5.51	VALVE TO ELBOW	-	Y	-	-	-	-	PRR-8
Line Number: 18-DC-10										
DC-10-F10R	C-F-1	C5.11	PIPE TO VALVE	-	Y	-	2	-	-	PRR-8, I2P2, I3P2

COMPONENT IDENTIFICATION	ASME CODE CAT	ASME CODE ITEM	DESCRIPTION	ASME CODE EXAM	REL REQ	4TH ISI INTERVAL PER1	PER2	PER3	IGSCC CATEGORY	REMARKS
Residual Heat Removal System **Drawing Number: ISI-I-10-4BSH2** **Line Number: 12-GB-10**										
GB-10-244PS	C-C	C3.20	PIPE STANCHION	-	-	-	-	-	-	H-10-1-64SA
GB-10-46PS	C-C	C3.20	PIPE STANCHION	-	-	-	-	-	-	H-10-64SR
GB-10-47PS	C-C	C3.20	PIPE STANCHION	-	-	-	-	-	-	H-10-1-63SR
GB-10-48PS	C-C	C3.20	PIPE STANCHION	-	-	-	-	-	-	H-10-1-62SA
GB-10-20-4B	C-F-2	C5.51	ELBOW TO PIPE	-	Y	-	-	-	-	PRR-8
GB-10-20-5E-B	C-F-2	C5.51	PIPE TO ELBOW	-	Y	-	-	-	-	PRR-8
GB-10-3-1B	C-F-2	C5.51	PIPE TO ELBOW	-	Y	-	-	-	-	PRR-8
GB-10-3-1C	C-F-2	C5.51	ELBOW TO PIPE	-	Y	-	-	-	-	PRR-8
GB-10-3-1D	C-F-2	C5.51	PIPE TO ELBOW	-	Y	-	-	-	-	PRR-8
GB-10-3-2B	C-F-2	C5.51	PIPE TO ELBOW	-	Y	-	-	-	-	PRR-8
GB-10-3-3B	C-F-2	C5.51	PIPE TO ELBOW	-	Y	-	-	-	-	PRR-8
GB-10-3-4B	C-F-2	C5.51	PIPE TO ELBOW	-	Y	-	-	-	-	PRR-8
GB-10-3-4C	C-F-2	C5.51	ELBOW TO ELBOW	-	Y	-	-	-	-	PRR-8
GB-10-3-5C	C-F-2	C5.51	PIPE TO ELBOW	-	Y	-	-	-	-	PRR-8
GB-10-3-5D	C-F-2	C5.51	ELBOW TO ELBOW	-	Y	-	-	-	-	PRR-8
GB-10-3-5E	C-F-2	C5.51	ELBOW TO PIPE	-	Y	-	2	-	-	PRR-8, I3P2
GB-10-3-6B	C-F-2	C5.51	ELBOW TO PIPE	-	Y	-	-	-	-	PRR-8
GB-10-3-7B	C-F-2	C5.51	ELBOW TO PIPE	-	Y	-	-	-	-	PRR-8

COMPONENT IDENTIFICATION	ASME CODE CAT	ASME CODE ITEM	DESCRIPTION	ASME CODE EXAM	REL REQ	4TH ISI INTERVAL PER1	PER2	PER3	IGSCC CATEGORY	REMARKS
Residual Heat Removal System **Drawing Number: ISI-I-10-4BSH2** **Line Number: 12-GB-10**										
GB-10-3-7C	C-F-2	C5.51	PIPE TO ELBOW	-	Y	-	-	-	-	PRR-8
GB-10-3-7D	C-F-2	C5.51	ELBOW TO PIPE	-	Y	-	-	-	-	PRR-8
GB-10-F211	C-F-2	C5.51	VALVE TO PIPE	-	Y	-	-	-	-	PRR-8
GB-10-F236	C-F-2	C5.51	PIPE TO ELBOW	-	Y	-	-	-	-	PRR-8
GB-10-F237	C-F-2	C5.51	PIPE TO PIPE	-	Y	-	-	-	-	PRR-8
GB-10-F237A	C-F-2	C5.51	PIPE TO ELBOW	-	Y	-	-	-	-	PRR-8
GB-10-F237B	C-F-2	C5.51	ELBOW TO PIPE	-	Y	-	-	-	-	PRR-8
GB-10-F238	C-F-2	C5.51	PIPE TO ELBOW	-	Y	-	-	-	-	PRR-8
GB-10-F239	C-F-2	C5.51	ELBOW TO PIPE	-	Y	-	-	3	-	PRR-8, I3P3
GB-10-F240	C-F-2	C5.51	PIPE TO ELBOW	-	Y	-	-	-	-	PRR-8
GB-10-F241	C-F-2	C5.51	ELBOW TO PIPE	-	Y	-	-	-	-	PRR-8
GB-10-F242	C-F-2	C5.51	ELBOW TO PIPE	-	Y	-	-	-	-	PRR-8
GB-10-F243	C-F-2	C5.51	PIPE TO ELBOW	-	Y	-	-	-	-	PRR-8
GB-10-F244	C-F-2	C5.51	ELBOW TO PIPE	-	Y	-	-	-	-	PRR-8
GB-10-F44	C-F-2	C5.51	PIPE TO ELBOW	-	Y	-	-	-	-	PRR-8
GB-10-F45	C-F-2	C5.51	PIPE TO ELBOW	-	Y	-	-	3	-	PRR-8, I3P3
GB-10-F46	C-F-2	C5.51	ELBOW TO PIPE	-	Y	-	-	-	-	PRR-8

COMPONENT IDENTIFICATION	ASME CODE CAT	ASME CODE ITEM	DESCRIPTION	ASME CODE EXAM	REL REQ	4TH ISI INTERVAL PER1	PER2	PER3	IGSCC CATEGORY	REMARKS
Residual Heat Removal System **Drawing Number: ISI-I-10-4BSH2** **Line Number: 12-GB-10**										
GB-10-F47	C-F-2	C5.51	ELBOW TO PIPE	-	Y	-	-	-	-	PRR-8
GB-10-F48	C-F-2	C5.51	ELBOW TO PIPE	-	Y	-	-	-	-	PRR-8
GB-10-F49	C-F-2	C5.51	ELBOW TO PIPE	-	Y	-	-	-	-	PRR-8
GB-10-F50	C-F-2	C5.51	PIPE TO PIPE	-	Y	-	-	-	-	PRR-8
GBB-10-F237C	C-F-2	C5.51	WELDOLET TO PIPE	-	Y	-	-	-	-	PRR-8
H-10-1-164	F-A	F1.20-A	RIGID HANGER	-	-	-	-	-	-	GB-10-244PS
H-10-1-505	F-A	F1.20-A	RIGID HANGER	-	-	-	-	-	-	-
H-10-1-58	F-A	F1.20-A	RIGID HANGER	-	-	-	-	-	-	-
H-10-1-59	F-A	F1.20-A	RIGID HANGER	-	-	-	-	-	-	-
H-10-1-60	F-A	F1.20-A	RIGID HANGER	-	-	-	-	-	-	-
H-10-1-61	F-A	F1.20-A	RIGID HANGER	-	-	-	-	-	-	-
H-10-1-62	F-A	F1.20-A	RIGID HANGER	-	-	-	-	-	-	-
H-10-1-63	F-A	F1.20-A	RIGID HANGER	-	-	-	-	-	-	-
H-10-1-1240	F-A	F1.20-B	LATERAL RESTRAINT	-	-	-	-	-	-	-
H-10-1-61SA	F-A	F1.20-B	ANCHOR	-	-	-	-	-	-	-
H-10-1-62SA	F-A	F1.20-B	ANCHOR	-	-	-	-	-	-	GB-10-48PS
H-10-1-63SR	F-A	F1.20-B	LATERAL RESTRAINT	-	-	-	-	-	-	GB-10-47PS

COMPONENT IDENTIFICATION	ASME CODE CAT	ASME CODE ITEM	DESCRIPTION	ASME CODE EXAM	REL REQ	4TH ISI INTERVAL PER1	PER2	PER3	IGSCC CATEGORY	REMARKS
Residual Heat Removal System **Drawing Number: ISI-I-10-4BSH2** **Line Number: 12-GB-10**										
H-10-1-64SR	F-A	F1.20-B	ANCHOR	-	-	-	-	-	-	GB-10-46PS
H-10-1-65	F-A	F1.20-C	SPRING HANGER	-	-	-	-	-	-	-
GB-10-20-5B	N/A	N/A	PIPE TO ELBOW	-	-	-	-	-	-	-
GB-10-20-5C	N/A	N/A	ELBOW TO PIPE	-	-	-	-	-	-	DOES NOT EXIST
GB-10-20-5D	N/A	N/A	PIPE TO ELBOW	-	-	-	-	-	-	DOES NOT EXIST
GB-10-20-6B	N/A	N/A	PIPE TO ELBOW	-	-	-	-	-	-	DOES NOT EXIST
GB-10-20-6C	N/A	N/A	ELBOW TO PIPE	-	-	-	-	-	-	DOES NOT EXIST

COMPONENT IDENTIFICATION	ASME CODE CAT	ASME CODE ITEM	DESCRIPTION	ASME CODE EXAM	REL REQ	4TH ISI INTERVAL PER1	PER2	PER3	IGSCC CATEGORY	REMARKS
Residual Heat Removal System **Drawing Number: ISI-I-10-4BSH2** **Line Number: N/A**										
GB-10-F241B	N/A	N/A	PIPE TO ELBOW	-	-	-	-	-	-	FORMERLY GB-10-20-5B; WELD ORIGIN UNCERTAIN - FW ASSUMED
SLT RHR-8	C-H	C7.10	PRESSURE BOUNDARY	VT-2	-	1	2	3	-	-

COMPONENT IDENTIFICATION	ASME CODE CAT	ASME CODE ITEM	DESCRIPTION	ASME CODE EXAM	REL REQ	4TH ISI INTERVAL PER1	PER2	PER3	IGSCC CATEGORY	REMARKS
Residual Heat Removal System										
Drawing Number: ISI-I-10-4BSH2										
Line Number: 8-GBB-10										
H-10-1-257	F-A	F1.20-B	RIGID SUPPORT	-	-	-	-	-	-	-
GBB-10-F237D	C-F-2	C5.51	VALVE TO WELDOLET	-	Y	-	-	-	-	PRR-8

COMPONENT IDENTIFICATION	ASME CODE CAT	ASME CODE ITEM	DESCRIPTION	ASME CODE EXAM	REL REQ	4TH ISI INTERVAL PER1	PER2	PER3	IGSCC CATEGORY	REMARKS
Residual Heat Removal System										
Drawing Number: ISI-I-10-5BSH2										
Line Number: N/A										
GL-10-VBW23B-1	C-G	C6.20	VALVE BODY WELD	-	-	-	-	-	-	-
GL-10-VBW23B-2	C-G	C6.20	VALVE BODY WELD	-	-	-	-	-	-	-
SLT RHR-5	C-H	C7.10	PRESSURE BOUNDARY	VT-2	-	1	2	3	-	-

COMPONENT IDENTIFICATION	ASME CODE CAT	ASME CODE ITEM	DESCRIPTION	ASME CODE EXAM	REL REQ	4TH ISI INTERVAL PER1	PER2	PER3	IGSCC CATEGORY	REMARKS
Residual Heat Removal System **Drawing Number: ISI-I-10-5BSH2** **Line Number: 10-GB-10**										
GB-10-3001-2-1	C-F-2	C5.51	ELBOW TO PIPE	-	Y	-	-	-	-	PRR-8
GB-10-30PS	C-C	C3.20	PIPE STANCHION	-	-	-	-	-	-	H-10-1-102S
GB-10-F32	C-F-2	C5.51	ELBOW TO PIPE	-	Y	-	-	-	-	PRR-8
GB-10-F31	C-F-2	C5.51	ELBOW TO PIPE	-	Y	-	-	-	-	PRR-8
eGB-10-F30	C-F-2	C5.51	ELBOW TO PIPE	-	Y	-	-	-	-	PRR-8
GB-10-F29	C-F-2	C5.51	ELBOW TO PIPE	-	Y	-	-	-	-	PRR-8
GB-10-F28	C-F-2	C5.51	REDUCING ELBOW TO ELBOW	-	Y	-	-	3	-	PRR-8, I3P3
GB-10-3001-2-4	C-F-2	C5.51	PIPE TO ELBOW	-	Y	-	-	-	-	PRR-8
GB-10-F34	C-F-2	C5.51	ELBOW TO PIPE	-	Y	-	-	-	-	PRR-8
GB-10-3001-2-2	C-F-2	C5.51	PIPE TO ELBOW	-	Y	-	-	-	-	PRR-8
GB-10-F45A	C-F-2	C5.51	ELBOW TO PIPE	-	Y	-	-	-	-	PRR-8
GB-10-3001-1-1	C-F-2	C5.51	PIPE TO ELBOW	-	Y	-	-	-	-	PRR-8
GB-10-2-6B	C-F-2	C5.51	PIPE TO ELBOW	-	Y	-	-	-	-	PRR-8
GB-10-2-5C	C-F-2	C5.51	ELBOW TO PIPE	-	Y	-	-	-	-	PRR-8
GB-10-2-5B	C-F-2	C5.51	PIPE TO ELBOW	-	Y	-	-	-	-	PRR-8
GB-10-2-4B	C-F-2	C5.51	PIPE TO ELBOW	-	Y	-	-	-	-	PRR-8)
GB-10-2-3C	C-F-2	C5.51	PIPE TO ELBOW	-	Y	-	-	-	-	PRR-8

COMPONENT IDENTIFICATION	ASME CODE CAT	ASME CODE ITEM	DESCRIPTION	ASME CODE EXAM	REL REQ	4TH ISI INTERVAL PER1	PER2	PER3	IGSCC CATEGORY	REMARKS
Residual Heat Removal System **Drawing Number: ISI-I-10-5BSH2** **Line Number: 10-GB-10**										
GB-10-2-2D	C-F-2	C5.51	ELBOW TO ELBOW	-	Y	-	-	-	-	PRR-8
GB-10-2-2C	C-F-2	C5.51	PIPE TO ELBOW	-	Y	-	-	-	-	PRR-8
GB-10-2-1A-D	C-F-2	C5.51	ELBOW TO ELBOW	-	Y	-	-	-	-	PRR-8
GB-10-2-1A-C	C-F-2	C5.51	PIPE TO ELBOW	-	Y	-	-	-	-	PRR-8
GB-10-2-1A-B	C-F-2	C5.51	ELBOW TO PIPE	-	Y	-	-	-	-	PRR-8
GB-10-32PS	C-C	C3.20	PIPE STANCHION	-	-	-	-	-	-	H-10-1-104S
GB-10-3001-2-3	C-F-2	C5.51	ELBOW TO PIPE	-	Y	-	-	-	-	PRR-8
H-10-1-103S	F-A	F1.20-B	RIGID HANGER	-	-	-	-	-	-	-
H-10-1-18	F-A	F1.20-C	SPRING HANGER	-	-	-	-	-	-	-
H-10-1-17	F-A	F1.20-C	SPRING HANGER	-	-	-	-	-	-	-
H-10-1-16	F-A	F1.20-C	SPRING HANGER	-	-	-	-	-	-	-
H-10-1-14	F-A	F1.20-C	SPRING HANGER	-	-	-	-	-	-	-
H-10-1-12	F-A	F1.20-C	SPRING HANGER	-	-	-	-	-	-	-
H-10-1-1338	F-A	F1.20-B	GUIDE	-	-	-	-	-	-	-
H-10-1-11	F-A	F1.20-B	RIGID HANGER	-	-	-	-	-	-	-
GB-10-F33	C-F-2	C5.51	ELBOW TO PIPE	-	Y	-	-	-	-	PRR-8
H-10-1-104S	F-A	F1.20-B	LATERAL RESTRAINT	-	-	-	-	-	-	GB-10-32PS

COMPONENT IDENTIFICATION	ASME CODE CAT	ASME CODE ITEM	DESCRIPTION	ASME CODE EXAM	REL REQ	4TH ISI INTERVAL PER1	PER2	PER3	IGSCC CATEGORY	REMARKS
Residual Heat Removal System Drawing Number: ISI-I-10-5BSH2 Line Number: 10-GB-10										
H-10-1-102S	F-A	F1.20-B	LATERAL RESTRAINT	-	-	-	-	-	-	GB-10-30PS
H-10-1-101S	F-A	F1.20-B	RIGID HANGER	-	-	-	-	-	-	-
H-10-1-161	F-A	F1.20-A	RIGID HANGER	-	-	-	-	-	-	-
GB-10-F59A	C-F-2	C5.51	PIPE TO VALVE	-	Y	-	-	3	-	PRR-8, I3P3
H-10-1-160	F-A	F1.20-A	RIGID HANGER	-	-	-	-	-	-	-
H-10-1-105S	F-A	F1.20-B	LATERAL RESTRAINT	-	-	-	-	-	-	-
H-10-1-162	F-A	F1.20-A	RIGID HANGER	-	-	-	-	-	-	-
Line Number: 10-GL-10										
GL-10-F61	C-F-2	C5.51	VALVE TO WELDOLET	-	Y	-	-	-	-	PRR-8
H-10-1-LT1	F-A	F1.20-C	SPRING HANGER	-	-	-	-	-	-	-
GL-10-3001-3-1	C-F-2	C5.51	PIPE TO WELDOLET	-	Y	-	-	-	-	PRR-8
GL-10-F44	C-F-2	C5.51	ELBOW TO VALVE	-	Y	-	-	-	-	PRR-8
GL-10-3001-3-2	C-F-2	C5.81	PIPE TO WELDOLET	-	-	-	-	-	-	-
H-10-1-LT2	F-A	F1.20-C	SPRING HANGER	-	-	-	-	-	-	-
GL-10-F102	C-F-2	C5.51	VALVE TO PENETRATION	-	Y	-	2	-	-	PRR-8, I3P2

COMPONENT IDENTIFICATION	ASME CODE CAT	ASME CODE ITEM	DESCRIPTION	ASME CODE EXAM	REL REQ	4TH ISI INTERVAL PER1	PER2	PER3	IGSCC CATEGORY	REMARKS
Residual Heat Removal System **Drawing Number: ISI-I-10-5BSH2** **Line Number: 12-GB-10**										
H-10-1-89	F-A	F1.20-B	RIGID HANGER	-	-	-	-	-	-	-
GB-10-F26	C-F-2	C5.51	PIPE TO PIPE	-	Y	-	-	-	-	PRR-8
GB-10-F25	C-F-2	C5.51	PIPE TO PIPE	-	Y	-	-	-	-	PRR-8
GB-10-10-2E	C-F-2	C5.51	TEE TO PIPE	-	Y	-	-	-	-	PRR-8
GB-10-10-2C	C-F-2	C5.51	TEE TO REDUCING ELBOW	-	Y	-	-	3	-	PRR-8, I3P3
GB-10-10-2B	C-F-2	C5.51	PIPE TO TEE	-	Y	-	-	-	-	PRR-8
GB-10-10-1B	C-F-2	C5.51	ELBOW TO PIPE	-	Y	-	-	-	-	PRR-8

COMPONENT IDENTIFICATION	ASME CODE CAT	ASME CODE ITEM	DESCRIPTION	ASME CODE EXAM	REL REQ	4TH ISI INTERVAL PER1	PER2	PER3	IGSCC CATEGORY	REMARKS
Residual Heat Removal System **Drawing Number: ISI-I-10-4ASH2** **Line Number: N/A**										
10-VI-1001-28A	N/A	N/A	VALVE INTERNALS	-	-	-	-	-	-	EXAM NOT REQ'D FOR ASME XI
SLT RHR-6	C-H	C7.10	PRESSURE BOUNDARY	VT-2	-	1	2	3	-	-
SLT RHR-9	C-H	C7.10	PRESSURE BOUNDARY	VT-2	-	1	2	3	-	-
SLT RHR-10	C-H	C7.10	PRESSURE BOUNDARY	VT-2	-	1	2	3	-	-

COMPONENT IDENTIFICATION	ASME CODE CAT	ASME CODE ITEM	DESCRIPTION	ASME CODE EXAM	REL REQ	4TH ISI INTERVAL PER1	PER2	PER3	IGSCC CATEGORY	REMARKS
Residual Heat Removal System **Drawing Number: ISI-I-10-4ASH2** **Line Number: 10-GB-10**										
GB-10-3002-4-1	C-F-2	C5.51	ELBOW TO PIPE	-	Y	-	-	-	-	PRR-8
GB-10-3002-2-2	C-F-2	C5.51	ELBOW TO PIPE	-	Y	-	-	3	-	PRR-8, I3P3
GB-10-46HL1(2)	C-C	C3.20	SUPPORT LUGS	-	-	-	-	-	-	H-10-1-197
GB-10-F62	C-F-2	C5.51	REDUCER TO ELBOW	-	Y	-	-	-	-	PRR-8
GB-10-F49A	C-F-2	C5.51	PIPE TO VALVE	-	Y	-	-	-	-	PRR-8
GB-10-3002-4-2	C-F-2	C5.51	PIPE TO ELBOW	-	Y	-	-	-	-	PRR-8
GB-10-F48A	C-F-2	C5.51	ELBOW TO PIPE	-	Y	-	-	-	-	PRR-8
GB-10-F47A	C-F-2	C5.51	ELBOW TO PIPE	-	Y	-	-	-	-	PRR-8
GB-10-F46B	C-F-2	C5.51	PIPE TO PIPE	-	Y	-	-	-	-	PRR-8
GB-10-F46A	C-F-2	C5.51	PIPE TO PIPE	-	Y	-	-	-	-	PRR-8
GB-10-F112	C-F-2	C5.51	ELBOW TO PIPE	-	Y	-	-	-	-	PRR-8
GB-10-8-3F	C-F-2	C5.51	PIPE TO ELBOW	-	Y	-	-	-	-	PRR-8
GB-10-8-3E	C-F-2	C5.51	ELBOW TO PIPE	-	Y	-	-	-	-	PRR-8
GB-10-8-3C	C-F-2	C5.51	PIPE TO PIPE	-	Y	-	-	-	-	PRR-8
H-10-1-196	F-A	F1.20-C	SPRING HANGER	-	-	-	-	-	-	-
GB-10-3002-2-1	C-F-2	C5.51	PIPE TO ELBOW	-	Y	-	-	-	-	PRR-8

COMPONENT IDENTIFICATION	ASME CODE CAT	ASME CODE ITEM	DESCRIPTION	ASME CODE EXAM	REL REQ	4TH ISI INTERVAL PER1	PER2	PER3	IGSCC CATEGORY	REMARKS
Residual Heat Removal System **Drawing Number: ISI-I-10-4ASH2** **Line Number: 10-GB-10**										
H-10-1-199	F-A	F1.20-C	SPRING HANGER	-	-	-	-	-	-	-
GB-10-F63	C-F-2	C5.51	ELBOW TO PIPE	-	Y	-	-	-	-	PRR-8
H-10-1-198	F-A	F1.20-C	SPRING HANGER	-	-	-	-	-	-	-
H-10-1-197	F-A	F1.20-C	SPRING HANGER	-	-	-	-	-	-	GB-10-46HL1(2)
GB-10-8-3B	C-F-2	C5.51	ELBOW TO PIPE	-	Y	-	-	-	-	PRR-8
GB-10-3002-2-3	C-F-2	C5.51	PIPE TO ELBOW	-	Y	-	-	-	-	PRR-8
GB-10-3002-3-1	C-F-2	C5.51	PIPE TO ELBOW	-	Y	-	-	-	-	PRR-8
H-10-1-39SG	F-A	F1.20-B	GUIDE	-	-	-	-	-	-	-
GB-10-3002-3-2	C-F-2	C5.51	ELBOW TO PIPE	-	Y	-	-	-	-	PRR-8
H-10-1-151	F-A	F.120-C	SPRING HANGER	-	-	-	-	-	-	-
GB-10-3002-3-3	C-F-2	C5.51	PIPE TO ELBOW	-	Y	-	-	-	-	PRR-8
GB-10-8-3D	C-F-2	C5.51	PIPE TO ELBOW	-	Y	-	-	-	-	PRR-8

COMPONENT IDENTIFICATION	ASME CODE CAT	ASME CODE ITEM	DESCRIPTION	ASME CODE EXAM	REL REQ	4TH ISI INTERVAL PER1	PER2	PER3	IGSCC CATEGORY	REMARKS
Residual Heat Removal System **Drawing Number: ISI-I-10-4ASH2** **Line Number: 10-GL-10**										
GL-10-VBW23A-1	C-G	C6.20	VALVE BODY WELD	-	-	-	-	-	-	-
GL-10-VBW23A-2	C-G	C6.20	VALVE BODY WELD	-	-	-	-	-	-	-
GL-10-3001-1-1	C-F-2	C5.51	PIPE TO ELBOW	-	Y	-	-	-	-	PRR-8
GL-10-3001-1-3	C-F-2	C5.51	PIPE TO WELDOLET	-	Y	-	-	-	-	PRR-8
GL-10-F42	C-F-2	C5.51	VALVE TO PIPE	-	Y	-	-	-	-	PRR-8
GL-10-F40R	C-F-2	C5.51	VALVE TO PIPE	-	Y	-	-	-	-	PRR-8
GL-10-F39R	C-F-2	C5.51	PIPE TO FLUED HEAD	-	Y	-	-	-	-	PRR-8
GL-10-F41	C-F-2	C5.51	ELBOW TO VALVE	-	Y	-	-	-	-	PRR-8
H-10-1-200	F-A	F1.20-C	SPRING HANGER	-	-	-	-	-	-	-

COMPONENT IDENTIFICATION	ASME CODE CAT	ASME CODE ITEM	DESCRIPTION	ASME CODE EXAM	REL REQ	4TH ISI INTERVAL PER1	PER2	PER3	IGSCC CATEGORY	REMARKS
Residual Heat Removal System										
Drawing Number: ISI-I-10-4ASH2										
Line Number: 12-GB-10										
GB-10-8-2E	C-F-2	C5.51	TEE TO REDUCER	-	Y	-	-	-	-	PRR-8
GB-10-F61	C-F-2	C5.51	PIPE TO PIPE	-	Y	-	-	-	-	PRR-8
GB-10-8-1B	C-F-2	C5.51	ELBOW TO PIPE	-	Y	-	-	-	-	PRR-8
GB-10-8-2C	C-F-2	C5.51	PIPE TO TEE	-	Y	-	-	-	-	PRR-8
GB-10-F60	C-F-2	C5.51	PIPE TO PIPE	-	Y	-	-	-	-	PRR-8
GB-10-8-2B	C-F-2	C5.51	PIPE TO TEE	-	Y	-	-	-	-	PRR-8
H-10-1-152	F-A	F1.20-C	SPRING HANGER	-	-	-	-	-	-	-
H-10-1-150	F-A	F1.20-C	SPRING HANGER	-	-	-	-	-	-	-
Line Number: 18-DB/DC-10										
DB/DC-10-3002-3-3	C-F-1	C5.11	PIPE TO PIPE	-	Y	-	2	-	-	PRR-8, I2P2, I3P2

COMPONENT IDENTIFICATION	ASME CODE CAT	ASME CODE ITEM	DESCRIPTION	ASME CODE EXAM	REL REQ	4TH ISI INTERVAL PER1	PER2	PER3	IGSCC CATEGORY	REMARKS
Residual Heat Removal System Drawing Number: ISI-I-10-4ASH2 Line Number: 18-DB-10										
H-10-1-180	F-A	F1.20-A	RIGID HANGER	-	-	-	-	-	-	-
DB-10-F98	C-F-2	C5.51	VALVE TO ELBOW	-	Y	-	-	-	-	PRR-8
DB-10-F60	C-F-2	C5.51	ELBOW TO PIPE	-	Y	-	-	-	-	PRR-8
Line Number: 18-DC-10										
DC-10-F9	C-F-1	C5.11	PIPE TO VALVE	-	Y	-	-	3	-	PRR-8, I3P3
Line Number: 18-GB-10										
GB-10-F59	C-F-2	C5.51	PIPE TO WELDOLET	-	Y	-	-	-	-	PRR-8
GB-10-6-5C	C-F-2	C5.51	WELDOLET TO PIPE	-	Y	-	-	-	-	PRR-8
GB-10-6-6B	C-F-2	C5.51	ELBOW TO PIPE	-	Y	-	-	-	-	PRR-8
GB-10-6-6C	C-F-2	C5.51	PIPE TO ELBOW	-	Y	-	-	-	-	PRR-8
GB-10-6-6D	C-F-2	C5.51	ELBOW TO PIPE	-	Y	-	-	-	-	PRR-8
GB-10-6-6E	C-F-2	C5.51	PIPE TO ELBOW	-	Y	-	-	-	-	PRR-8
GB-10-F58	C-F-2	C5.51	ELBOW TO PIPE	-	Y	-	-	-	-	PRR-8
GB-10-F221	N/A	N/A	PIPE TO PIPE	-	-	-	-	-	-	EXEMPT due to size (4")
GB-10-F62A	C-F-2	C5.51	PIPE TO VALVE	-	Y	-	2	-	-	PRR-8, I3P2
GB-10-6-5D	C-F-2	C5.81	PIPE TO WELDOLET	-	-	-	-	-	-	-
H-10-1-35SH	F-A	F1.20-A	RIGID HANGER	-	-	-	-	-	-	-
H-10-1-36SR	F-A	F1.20-B	LATERAL RESTRAINT	-	-	-	-	-	-	-
H-10-1-96	F-A	F1.20-C	SPRING HANGER	-	-	-	-	-	-	-
GB-10-F57	C-F-2	C5.51	TEE TO ELBOW	-	Y	-	-	-	-	PRR-8

COMPONENT IDENTIFICATION	ASME CODE CAT	ASME CODE ITEM	DESCRIPTION	ASME CODE EXAM	REL REQ	4TH ISI INTERVAL PER1	PER2	PER3	IGSCC CATEGORY	REMARKS
Residual Heat Removal System **Drawing Number: ISI-I-10-4ASH1** **Line Number: N/A**										
GBB-10-F57A	C-F-2	N/A	N/A	-	Y	-	-	-	-	PRR-8
H-10-1-157	N/A	N/A	SPRING HANGER	-	-	-	-	-	-	HANGER NEVER INSTALLED
Line Number: 12-GB-10										
GB-10-F64	C-F-2	C5.51	PIPE TO ELBOW	-	Y	-	-	-	-	PRR-8
GB-10-66PS	C-C	C3.20	PIPE STANCHION	-	-	-	-	-	-	H-10-1-88SR
GB-10-F69R	C-F-2	C5.51	PIPE TO VALVE	-	Y	-	-	-	-	PRR-8, I2P1
GB-10-F68A	C-F-2	C5.51	PIPE TO PIPE	-	Y	-	-	-	-	PRR-8
GB-10-F68	C-F-2	C5.51	PIPE TO ELBOW	-	Y	-	-	-	-	PRR-8
GB-10-F65	C-F-2	C5.51	ELBOW TO VALVE	-	Y	-	2	-	-	PRR-8, I2P2, I3P2
GB-10-F328R	C-F-2	C5.51	PIPE TO PIPE	-	Y	-	-	-	-	PRR-8
H-10-1-84SA	F-A	F1.20-B	ANCHOR	-	-	-	-	-	-	I2P1, GB-10-64PS
GB-10-64PS	C-C	C3.20	PIPE STANCHION	-	-	-	-	-	-	H-10-1-84SA
GB-10-16-3B	C-F-2	C5.51	ELBOW TO PIPE	-	Y	-	-	-	-	PRR-8
GB-10-16-2C	C-F-2	C5.51	TEE TO PIPE	-	Y	-	-	-	-	PRR-8, I2P2
H-10-1-88SR	F-A	F1.20-B	RIGID HANGER	-	-	-	-	-	-	I2P1, GB-10-66PS
GB-10-16-2B	C-F-2	C5.51	PIPE TO TEE	-	Y	-	-	-	-	PRR-8
H-10-1-155	F-A	F1.20-C	SPRING HANGER	-	-	-	-	3	-	I2P1, I3P3, GB-10-68PS
GB-10-16-1C	C-F-2	C5.51	PIPE TO ELBOW	-	Y	-	2	-	-	PRR-8, I2P2, I3P2
GB-10-16-1B	C-F-2	C5.51	ELBOW TO PIPE	-	Y	-	-	-	-	PRR-8

COMPONENT IDENTIFICATION	ASME CODE CAT	ASME CODE ITEM	DESCRIPTION	ASME CODE EXAM	REL REQ	4TH ISI INTERVAL PER1	PER2	PER3	IGSCC CATEGORY	REMARKS
Residual Heat Removal System Drawing Number: ISI-I-10-4ASH1 Line Number: 12-GB-10										
GB-10-16-2D	C-F-2	C5.51	TEE TO REDUCER	-	Y	-	-	-	-	PRR-8, I2P2
GB-10-F66	C-F-2	C5.51	VALVE TO PIPE	-	Y	-	-	-	-	PRR-8
GB-10-68PS	C-C	C3.20	PIPE STANCHION	-	-	-	-	-	-	H-10-1-155
Line Number: 12-HL-10										
HL-10-200HL1(4)	C-C	C3.20	SUPPORT LUGS	-	-	-	2	-	-	I2P2, I3P2, H-10-1-156
HL-10-6-4A-G	C-F-2	C5.51	PIPE TO ELBOW	-	Y	-	-	-	-	PRR-8
HL-10-6-4A-C	C-F-2	C5.51	TEE TO PIPE	-	Y	-	-	-	-	PRR-8
HL-10-6-4B-D	N/A	N/A	ELBOW TO PIPE	-	-	-	-	-	-	DELETED FROM ISIT 6/95 - SEE PDC 85-75; WAS CAT. C-F; ITEM C5.11
HL-10-6-2D	C-F-2	C5.51	PIPE TO ELBOW	-	Y	-	-	-	-	PRR-8
HL-10-6-2C	C-F-2	C5.51	ELBOW TO PIPE	-	Y	-	-	-	-	PRR-8
HL-10-6-2B	C-F-2	C5.51	PIPE TO ELBOW	-	Y	-	-	-	-	PRR-8
HL-10-105PS	C-C	C3.20	PIPE STANCHION	-	-	-	-	-	-	H-10-1-89SA
HL-10-6-4B-B	C-F-2	C5.51	PIPE TO ELBOW	-	Y	-	-	-	-	PRR-8
HL-10-6-3B	C-F-2	C5.51	PIPE TO REDUCER	-	Y	-	-	-	-	PRR-8
HL-10-6-1B	C-F-2	C5.51	PIPE TO ELBOW	-	Y	-	-	-	-	PRR-8, I2P3
H-10-1-66	F-A	F1.20-C	SPRING HANGER	-	-	-	-	-	-	I2P1
H-10-1-156	F-A	F1.20-A	RIGID HANGER	-	-	-	-	-	-	I2P1, HL-10-200HL1(4)
H-10-1-280	F-A	F1.20-B	LATERAL RESTRAINT	-	-	-	-	3	-	I2P3, I3P3

COMPONENT IDENTIFICATION	ASME CODE CAT	ASME CODE ITEM	DESCRIPTION	ASME CODE EXAM	REL REQ	4TH ISI INTERVAL PER1	PER2	PER3	IGSCC CATEGORY	REMARKS
Residual Heat Removal System Drawing Number: ISI-I-10-4ASH1 Line Number: 12-HL-10										
HL-10-F268	C-F-2	C5.51	PIPE TO PIPE	-	Y	-	-	-	-	PRR-8, I2P1
H-10-1-89SA	F-A	F1.20-B	ANCHOR	-	-	-	-	-	-	I2P1, HL-10-105PS
HL-10-F267	C-F-2	C5.51	ELBOW TO TEE	Y	-	-	-	-	-	PRR-8
H-10-1-67	F-A	F1.20-C	SPRING HANGER	-	-	-	-	-	-	I2P1
HL-10-F200R	C-F-2	C5.51	VALVE TO PIPE	-	Y	-	-	3	-	PRR-8, I2P3, I3P3
HL-10-F103	C-F-2	C5.51	ELBOW TO PIPE	-	Y	-	-	-	-	PRR-8
H-10-1-68	F-A	F1.20-C	SPRING HANGER	-	-	-	-	-	-	I2P1
HL-10-F105	C-F-2	C5.51	ELBOW TO PIPE	-	Y	-	-	-	-	PRR-8, I2P2
HL-10-6-4B-C	N/A	N/A	ELBOW TO PIPE	-	-	-	-	-	-	DELETED FROM ISIT 6/95 - SEE PDC 85-75; WAS CAT. C-F; ITEM C5.11
HL-10-F200A	C-F-2	C5.51	PIPE TO PIPE	-	Y	-	-	-	-	PRR-8
HL-10-F104	C-F-2	C5.51	ELBOW TO PIPE	-	Y	-	-	-	-	PRR-8
Line Number: 16-HL-10										
HL-10-6-3C	C-F-2	C5.51	REDUCER TO ELBOW	-	Y	-	-	-	-	PRR-8
HL-10-F102	C-F-2	C5.51	ELBOW TO PIPE (NOZ)	-	Y	-	-	-	-	PRR-8, I2P1
Line Number: 6-HL-10										
H-10-1-85SR	F-A	F1.20-B	RIGID HANGER	-	-	-	-	-	-	I2P1, HL-10-201PS
GB-10-F67	C-F-2	C5.51	REDUCER TO VALVE	-	Y	-	-	-	-	PRR-8, I2P1

COMPONENT IDENTIFICATION	ASME CODE CAT	ASME CODE ITEM	DESCRIPTION	ASME CODE EXAM	REL REQ	4TH ISI INTERVAL PER1	PER2	PER3	IGSCC CATEGORY	REMARKS
Residual Heat Removal System **Drawing Number: ISI-I-10-4ASH1** **Line Number: 6-HL-10**										
H-10-1-159	F-A	F1.20-A	RIGID HANGER	-	-	-	-	-	-	I2P1
H-10-1-87SA	F-A	F1.20-B	ANCHOR Ht. Ex	-	-	-	2	-	-	I2P1, I3P2, HL-10-87PS1
HL-10-87PS1	**C-C**	**C3.20**	**PIPE STANCHION**	-	-	-	-	-	-	**H-10-1-87SA**
H-10-1-52	F-A	F1.20-B	RIGID HANGER	-	-	-	-	-	-	I2P1
H-10-1-86SR	F-A	F1.20-B	GUIDE	-	-	-	-	-	-	I2P1
HL-10-5-1E	C-F-2	C5.51	ELBOW TO PIPE	-	Y	-	-	-	-	PRR-8
HL-10-201PS	C-C	C3.20	PIPE STANCHION	-	-	-	-	-	-	H-10-1-85SR
H-10-1-51	F-A	F1.20-B	RIGID HANGER	-	-	-	-	-	-	I2P1
HL-10-5-2C	C-F-2	C5.51	ELBOW TO PIPE	-	Y	-	-	-	-	PRR-8
HL-10-6-4A-D	C-F-2	C5.51	PIPE TO TEE	-	Y	-	-	-	-	PRR-8
HL-10-F106	C-F-2	C5.51	PIPE TO PIPE	-	Y	-	-	-	-	PRR-8, I2P3
HL-10-F107	C-F-2	C5.51	ELBOW TO PIPE	-	Y	-	-	3	-	PRR-8, I2P3, I3P3
HL-10-F201	C-F-2	C5.51	VALVE TO PIPE	-	Y	-	-	-	-	PRR-8
HL-10-5-2F	C-F-2	C5.51	PIPE TO ELBOW	-	Y	-	-	-	-	PRR-8
HL-10-5-1C	C-F-2	C5.51	ELBOW TO PIPE	-	Y	-	-	-	-	PRR-8
HL-10-5-2D	C-F-2	C5.51	PIPE TO ELBOW	-	Y	-	-	-	-	PRR-8
HL-10-F47	C-F-2	C5.51	VALVE TO PIPE	-	Y	-	-	-	-	PRR-8
HL-10-5-2B	C-F-2	C5.51	PIPE TO ELBOW	-	Y	-	-	-	-	PRR-8
HL-10-5-1I	C-F-2	C5.51	ELBOW TO PIPE	-	Y	-	-	-	-	PRR-8

COMPONENT IDENTIFICATION	ASME CODE CAT	ASME CODE ITEM	DESCRIPTION	ASME CODE EXAM	REL REQ	4TH ISI INTERVAL PER1	PER2	PER3	IGSCC CATEGORY	REMARKS
Residual Heat Removal System										
Drawing Number: ISI-I-10-4ASH1										
Line Number: 6-HL-10										
HL-10-5-1H	C-F-2	C5.51	PIPE TO ELBOW	-	Y	-	-	-	-	PRR-8
HL-10-5-1G	C-F-2	C5.51	ELBOW TO PIPE	-	Y	-	-	-	-	PRR-8
HL-10-5-1F	C-F-2	C5.51	PIPE TO ELBOW	-	Y	-	-	-	-	PRR-8
HL-10-5-1D	C-F-2	C5.51	PIPE TO ELBOW	-	Y	-	-	-	-	PRR-8
HL-10-5-1B	C-F-2	C5.51	PIPE TO ELBOW	-	Y	-	-	-	-	PRR-8, I2P3
HL-10-5-2E	C-F-2	C5.51	ELBOW TO PIPE	-	Y	-	-	-	-	PRR-8

COMPONENT IDENTIFICATION	ASME CODE CAT	ASME CODE ITEM	DESCRIPTION	ASME CODE EXAM	REL REQ	4TH ISI INTERVAL PER1	PER2	PER3	IGSCC CATEGORY	REMARKS
Residual Heat Removal System										
Drawing Number: ISI-I-10-2A										
Line Number: Pump P203C										
10-P203C-HL	C-C	C3.20	PUMP INTEGRAL ATTMT	-	-	-	-	-	-	H-10-1-P203C
H-10-1-P203C	F-A	F1.40	PUMP SUPPORT	-	-	-	-	-	-	10-P203C-HL
Line Number: 18-HB-10										
HB-10-3-2C	C-F-2	C5.51	PIPE TO TEE	-	Y	-	-	-	-	PRR-8
HB-10-3-2D	C-F-2	C5.51	TEE TO FLANGE	-	Y	-	-	-	-	PRR-8, I2P1
HB-10-3-2M	C-F-2	C5.51	PIPE TO ELBOW	-	Y	-	-	-	-	PRR-8
HB-10-4-2A	C-F-2	C5.51	PIPE TO FLANGE	-	Y	-	-	-	-	PRR-8
HB-10-4-2C	C-F-2	C5.51	FLANGE TO PIPE	-	Y	-	-	-	-	PRR-8
HB-10-3-3A	C-F-2	C5.51	PIPE TO FLANGE	-	Y	-	-	-	-	PRR-8
HB-10-3-3C	C-F-2	C5.51	FLANGE TO PIPE	-	Y	-	-	-	-	PRR-8
HB-10-4-1C	C-F-2	C5.51	PIPE TO TEE	-	Y	-	-	-	-	PRR-8
HB-10-4-1D	C-F-2	C5.51	TEE TO FLANGE	-	Y	-	-	-	-	PRR-8
HB-10-4-1M	C-F-2	C5.51	PIPE TO ELBOW	-	Y	-	-	-	-	PRR-8
HB-10-F109	C-F-2	C5.51	VALVE TO PIPE	-	Y	-	-	-	-	PRR-8
HB-10-F110	C-F-2	C5.51	FLANGE TO PUMP	-	Y	-	-	-	-	PRR-8, I2P1
HB-10-F111	C-F-2	C5.51	VALVE TO ELBOW	-	Y	-	-	-	-	PRR-8

COMPONENT IDENTIFICATION	ASME CODE CAT	ASME CODE ITEM	DESCRIPTION	ASME CODE EXAM	REL REQ	4TH ISI INTERVAL PER1	PER2	PER3	IGSCC CATEGORY	REMARKS
Residual Heat Removal System **Drawing Number: ISI-I-10-2A** **Line Number: 18-HB-10**										
HB-10-F188	C-F-2	C5.51	VALVE TO ELBOW	-	Y	-	-	-	-	PRR-8
HB-10-F189	C-F-2	C5.51	FLANGE TO PUMP	-	Y	-	-	-	-	PRR-8, I2P2
HB-10-F190	C-F-2	C5.51	VALVE TO PIPE	-	Y	-	-	-	-	PRR-8
HB-10-109PS	C-C	C3.20	PIPE STANCHION	-	-	-	-	-	-	H-10-1-22SH
HB-10-4-1F	C-F-2	C5.51	TEE TO PIPE	-	Y	-	-	-	-	PRR-8
HB-10-190PS2	C-C	C3.20	PIPE STANCHION	-	-	-	-	-	-	H-10-1-25SH
HB-10-3-2I	C-F-2	C5.81	PIPE TO WELDOLET	-	-	-	-	-	-	-
HB-10-4-1I	C-F-2	C5.81	PIPE TO WELDOLET	-	-	-	-	-	-	-
H-10-1-25SH	F-A	F1.20-C	SPRING HANGER	-	-	-	-	-	-	I2P1, HB-10-190PS2
H-10-1-22SH	F-A	F1.20-C	SPRING SUPPORT	-	-	-	2	-	-	I2P1, I3P2, HB-10-109PS
H-10-1-SG18	F-A	F1.20-B	RESTRAINT	-	-	-	-	3	-	I2P3, I3P3, HB-10-188HL1(8)
H-10-1-24SR	F-A	F1.20-B	LATERAL RESTRAINT	-	-	-	-	-	-	I2P1, HB-10-190PS1
HB-10-188HL1(8)	C-C	C3.20	SUPPORT LUGS	-	-	-	-	-	-	I2P1, H-10-1-22SH
HB-10-190PS1	C-C	C3.20	PIPE STANCHION	-	-	-	-	-	-	H-10-1-24SR
HB-10-3-2F	C-F-2	C5.51	TEE TO PIPE	-	Y	1	-	-	-	PRR-8, I2P1, I3P1

COMPONENT IDENTIFICATION	ASME CODE CAT	ASME CODE ITEM	DESCRIPTION	ASME CODE EXAM	REL REQ	4TH ISI INTERVAL PER1	PER2	PER3	IGSCC CATEGORY	REMARKS
Residual Heat Removal System **Drawing Number: ISI-I-10-2A** **Line Number: 18-HL-10**										
HL-10-3-1C	C-F-2	C5.51	ELBOW TO PIPE	-	Y	-	-	-	-	PRR-8
HL-10-3-1B	C-F-2	C5.51	PIPE TO ELBOW	-	Y	-	-	-	-	PRR-8
HL-10-202PS2	C-C	C3.20	PIPE STANCHION	-	-	-	-	-	-	-
HL-10-4-1C	C-F-2	C5.51	ELBOW TO PIPE	-	Y	-	-	-	-	PRR-8
HL-10-203PS	C-C	C3.20	PIPE STANCHION	-	-	-	-	-	-	-
HL-10-204PS	C-C	C3.20	PIPE STANCHION	-	-	-	-	-	-	H-10-1-19
HL-10-205PS1	C-C	C3.20	PIPE STANCHION	-	-	-	-	-	-	H-10-1-20
HL-10-205PS2	C-C	C3.20	PIPE STANCHION	-	-	-	-	-	-	H-10-1-21
HL-10-206PS1	C-C	C3.20	PIPE STANCHION	-	-	-	-	-	-	H-10-1-138
HL-10-206PS2	C-C	C3.20	PIPE STANCHION	-	-	-	-	-	-	H-10-1-20SH
HL-10-3-1D	C-F-2	C5.51	PIPE TO ELBOW	-	Y	-	-	-	-	PRR-8
HL-10-202PS1	C-C	C3.20	PIPE STANCHION	-	-	-	-	-	-	-
H-10-1-20	F-A	F1.20-B	RIGID SUPPORT	-	-	-	-	-	-	I2P2, HL-10-205PS1
HL-10-3-3C	C-F-2	C5.51	PIPE TO ELBOW	-	Y	-	-	-	-	PRR-8
HL-10-F207	C-F-2	C5.51	PIPE TO VALVE	-	Y	-	-	-	-	PRR-8
HL-10-F208	C-F-2	C5.51	PIPE TO PIPE	-	Y	-	-	-	-	PRR-8
H-10-1-136	F-A	F1.20-B	RIGID HANGER	-	-	-	-	-	-	I2P1

COMPONENT IDENTIFICATION	ASME CODE CAT	ASME CODE ITEM	DESCRIPTION	ASME CODE EXAM	REL REQ	4TH ISI INTERVAL PER1	PER2	PER3	IGSCC CATEGORY	REMARKS
Residual Heat Removal System **Drawing Number: ISI-I-10-2A** **Line Number: 18-HL-10**										
H-10-1-138	F-A	F1.20-B	RIGID HANGER	-	-	-	-	-	-	I2P1, HL-10-206PS1
H-10-1-18SR	F-A	F1.20-B	LATERAL RESTRAINT	-	-	-	-	-	-	I2P1
HL-10-F205	C-F-2	C5.51	PIPE TO ELBOW	-	Y	-	-	-	-	PRR-8, I2P1
H-10-1-19SR	F-A	F1.20-B	LATERAL RESTRAINT	-	-	-	-	-	-	I2P1
HL-10-F204	C-F-2	C5.51	NOZZLE TO PIPE	-	Y	-	-	-	-	PRR-8, I2P1
H-10-1-20SH	F-A	F1.20-B	RIGID HANGER	-	-	-	-	-	-	I2P1, HL-10-206PS2
H-10-1-21	F-A	F1.20-B	RIGID HANGER	-	-	-	-	-	-	I2P2, HL-10-205PS2
H-10-1-21SR	F-A	F1.20-B	LATERAL RESTRAINT	-	-	-	2	-	-	I2P1, I3P2
H-10-1-22	F-A	F1.20-B	RIGID SUPPORT	-	-	-	-	-	-	I2P2
H-10-1-23	F-A	F1.20-B	RIGID HANGER	-	-	-	-	-	-	I2P2
H-10-1-23SR	F-A	F1.20-B	LATERAL RESTRAINT	-	-	-	-	-	-	I2P1
H-10-1-19	F-A	F1.20-B	RIGID HANGER	-	-	-	-	-	-	I2P2, HL-10-204PS
HL-10-4-3B	C-F-2	C5.51	FLANGE TO PIPE	-	Y	-	-	-	-	PRR-8
HL-10-3-2B	C-F-2	C5.51	FLANGE TO PIPE	-	Y	-	-	-	-	PRR-8
HL-10-3-3B	C-F-2	C5.51	ELBOW TO PIPE	-	Y	-	-	-	-	PRR-8, I2P1
HL-10-4-1B	C-F-2	C5.51	PIPE TO ELBOW	-	Y	-	-	-	-	PRR-8
HL-10-4-1D	C-F-2	C5.51	PIPE TO ELBOW	-	Y	-	-	-	-	PRR-8

COMPONENT IDENTIFICATION	ASME CODE CAT	ASME CODE ITEM	DESCRIPTION	ASME CODE EXAM	REL REQ	4TH ISI INTERVAL PER1	PER2	PER3	IGSCC CATEGORY	REMARKS
Residual Heat Removal System										
Drawing Number: ISI-I-10-2A										
Line Number: 18-HL-10										
HL-10-4-1E	C-F-2	C5.51	ELBOW TO PIPE	-	Y	-	-	-	-	PRR-8
HL-10-4-2B	C-F-2	C5.51	ELBOW TO PIPE	-	Y	1	-	-	-	PRR-8, I2P1, I3P1
HL-10-F206	C-F-2	C5.51	PIPE TO ELBOW	-	Y	-	-	-	-	PRR-8
HL-10-4-2D	C-F-2	C5.51	ELBOW TO FLANGE	-	Y	-	-	-	-	PRR-8
HL-10-3-1E	C-F-2	C5.51	ELBOW TO FLANGE	-	Y	-	-	-	-	PRR-8, I2P1
HL-10-4-4B	C-F-2	C5.51	ELBOW TO PIPE	-	Y	-	-	-	-	PRR-8
HL-10-4-4C	C-F-2	C5.51	PIPE TO ELBOW	-	Y	-	-	-	-	PRR-8
HL-10-4-4D	C-F-2	C5.51	ELBOW TO PIPE	-	Y	-	-	-	-	PRR-8
HL-10-F191	C-F-2	C5.51	ELBOW TO VALVE	-	Y	-	-	-	-	PRR-8
HL-10-F202	C-F-2	C5.51	NOZZLE TO PIPE	-	Y	1	-	-	-	PRR-8, I2P1, I3P1
HL-10-F203	C-F-2	C5.51	PIPE TO ELBOW	-	Y	-	-	-	-	PRR-8, I2P1
HL-10-4-2C	C-F-2	C5.51	PIPE TO ELBOW	-	Y	-	-	-	-	PRR-8

COMPONENT IDENTIFICATION	ASME CODE CAT	ASME CODE ITEM	DESCRIPTION	ASME CODE EXAM	REL REQ	4TH ISI INTERVAL PER1	PER2	PER3	IGSCC CATEGORY	REMARKS
Residual Heat Removal System **Drawing Number: ISI-I-10-2B** **Line Number: Pump P203B**										
10-P203B-HL	C-C	C3.30	PUMP INTEGRAL ATTMT	-	-	-	-	-	-	H-10-1-P203B
H-10-1-P203B	F-A	F1.40	PUMP SUPPORT	-	-	-	-	-	-	10-P203B-HL
Line Number: Pump P203D										
H-10-1-P203D	F-A	F1.40	PUMP SUPPORT	-	-	-	-	-	-	10-P203D-HL
10-P203D-HL	C-C	C3.30	PUMP INTEGRAL ATTMT	-	-	-	-	-	-	H-10-1-P203D
Line Number: 18-HB-10										
HB-10-F138	C-F-2	C5.51	FLANGE TO PIPE	-	Y	-	-	-	-	PRR-8, I2P2
HB-10-5-2A	C-F-2	C5.51	FLANGE TO PIPE	-	Y	-	-	-	-	PRR-8
HB-10-5-2B	C-F-2	C5.51	PIPE TO FLANGE	-	Y	-	-	-	-	PRR-8
HB-10-6-2C	C-F-2	C5.51	PIPE TO TEE	-	Y	-	-	-	-	PRR-8
HB-10-6-2D	C-F-2	C5.51	TEE TO FLANGE	-	Y	-	-	-	-	PRR-8
HB-10-6-2F	C-F-2	C5.51	TEE TO PIPE	-	Y	-	-	-	-	PRR-8
HB-10-6-2M	C-F-2	C5.51	PIPE TO ELBOW	-	Y	-	-	-	-	PRR-8
HB-10-6-3A	C-F-2	C5.51	FLANGE TO PIPE	-	Y	-	-	-	-	PRR-8
HB-10-5-1I	C-F-2	C5.81	PIPE TO WELDOLET	-	-	-	-	-	-	-
HB-10-F137	C-F-2	C5.51	VALVE TO PIPE	-	Y	-	-	-	-	PRR-8, I2P2

COMPONENT IDENTIFICATION	ASME CODE CAT	ASME CODE ITEM	DESCRIPTION	ASME CODE EXAM	REL REQ	4TH ISI INTERVAL PER1	PER2	PER3	IGSCC CATEGORY	REMARKS
Residual Heat Removal System **Drawing Number: ISI-I-10-2B** **Line Number: 18-HB-10**										
HB-10-5-1D	C-F-2	C5.51	TEE TO FLANGE	-	Y	-	-	-	-	PRR-8
HB-10-F140	C-F-2	C5.51	VALVE TO ELBOW	-	Y	-	-	-	-	PRR-8
HB-10-F143	C-F-2	C5.51	VALVE TO ELBOW	-	Y	-	-	-	-	PRR-8
HB-10-137PS1	C-C	C3.20	PIPE STANCHION	-	-	-	-	-	-	H-10-1-27SR
HB-10-F145	C-F-2	C5.51	FLANGE TO PIPE	-	Y	-	-	-	-	PRR-8, I2P2
HB-10-F146	C-F-2	C5.51	VALVE TO PIPE	-	Y	-	-	-	-	PRR-8
HB-10-6-3B	C-F-2	C5.51	PIPE TO FLANGE	-	Y	-	2	-	-	PRR-8, I3P2
H-10-1-SG17	F-A	F1.20-B	LATERAL RESTRAINT	-	-	-	-	3	-	I2P3, I3P3, HB-10-140HL1(4)
HB-10-5-1C	C-F-2	C5.51	PIPE TO TEE	-	Y	-	-	-	-	PRR-8
H-10-1-33SH	F-A	F1.20-C	SPRING HANGER	-	-	-	2	-	-	I2P1, I3P2, HB-10-146PS
HB-10-146PS	C-C	C3.20	PIPE STANCHION	-	-	-	-	-	-	H-10-1-33SH
HB-10-140HL1(4)	C-C	C3.20	SUPPORT LUGS	-	-	-	-	-	-	I2P1, H-10-1-SG17
HB-10-6-2I	C-F-2	C5.81	PIPE TO WELDOLET	-	-	-	-	-	-	-
H-10-1-28SH	F-A	F1.20-C	SPRING HANGER	-	-	-	-	-	-	I2P1, HB-10-137PS2
HB-10-5-1F	C-F-2	C5.51	TEE TO PIPE	-	Y	-	-	-	-	PRR-8
HB-10-137PS2	C-C	C3.20	PIPE STANCHION	-	-	-	-	-	-	H-10-1-28SH
HB-10-5-1M	C-F-2	C5.51	PIPE TO ELBOW	-	Y	-	-	-	-	PRR-8
H-10-1-27SR	F-A	F1.20-B	LATERAL RESTRAINT	-	-	-	-	-	-	I2P2, HB-10-137PS1

COMPONENT IDENTIFICATION	ASME CODE CAT	ASME CODE ITEM	DESCRIPTION	ASME CODE EXAM	REL REQ	4TH ISI INTERVAL PER1	PER2	PER3	IGSCC CATEGORY	REMARKS
Residual Heat Removal System **Drawing Number: ISI-I-10-2B** **Line Number: 18-HL-10**										
HL-10-100PS3	C-C	C3.20	PIPE STANCHION	-	-	-	-	-	-	H-10-1-57
HL-10-101PS	C-C	C3.20	PIPE STANCHION	-	-	-	-	-	-	H-10-1-123
HL-10-98PS2	C-C	C3.20	PIPE STANCHION	-	-	-	-	-	-	H-10-1-55
HL-10-99PS2	C-C	C3.20	PIPE STANCHION	-	-	-	-	-	-	H-10-1-31SH
HL-10-7-1D	C-F-2	C5.51	PIPE TO ELBOW	-	Y	-	-	-	-	PRR-8
HL-10-10-1B	C-F-2	C5.51	ELBOW TO PIPE	-	Y	-	-	-	-	PRR-8, I2P2
HL-10-100PS1	C-C	C3.20	PIPE STANCHION	-	-	-	-	-	-	-
HL-10-99PS1	C-C	C3.20	PIPE STANCHION	-	-	-	-	-	-	H-10-1-121
H-10-1-31SH	F-A	F1.20-B	RIGID HANGER	-	Y	-	-	-	-	I2P1, HL-10-99PS2
HL-10-F97	C-F-2	C5.51	PIPE TO PIPE	-	Y	-	-	-	-	PRR-8, I2P2
HL-10-F98	C-F-2	C5.51	PIPE TO ELBOW	-	Y	-	-	-	-	PRR-8, I2P2
HL-10-F99	C-F-2	C5.51	PIPE TO ELBOW	-	Y	-	-	-	-	PRR-8, I2P2
H-10-1-121	F-A	F1.20-B	RIGID HANGER	-	-	-	-	-	-	I2P2, HL-10-99PS1
H-10-1-123	F-A	F1.20-B	RIGID HANGER	-	Y	-	-	-	-	I2P1, HL-10-101PS
H-10-1-26SR	F-A	F1.20-B	LATERAL RESTRAINT	-	Y	-	-	-	-	I2P1, HL-10-100PS2
HL-10-100PS2	C-C	C3.20	PIPE STANCHION	-	-	-	-	-	-	H-10-1-26SR
HL-10-7-1B	C-F-2	C5.51	PIPE TO ELBOW	-	Y	-	-	-	-	PRR-8
H-10-1-30SR	F-A	F1.20-B	LATERAL RESTRAINT	-	-	-	-	-	-	I2P1
HL-10-F101	C-F-2	C5.51	PIPE TO ELBOW	-	Y	-	-	-	-	PRR-8

COMPONENT IDENTIFICATION	ASME CODE CAT	ASME CODE ITEM	DESCRIPTION	ASME CODE EXAM	REL REQ	4TH ISI INTERVAL PER1	PER2	PER3	IGSCC CATEGORY	REMARKS
Residual Heat Removal System **Drawing Number: ISI-I-10-2B** **Line Number: 18-HL-10**										
H-10-1-32SR	F-A	F1.20-B	LATERAL RESTRAINT	-	-	-	-	-	-	I2P1
H-10-1-53	F-A	F1.20-B	RIGID HANGER	-	-	-	-	-	-	I2P1, HL-10-97PS
HL-10-97PS	C-C	C3.20	PIPE STANCHION	-	-	-	-	-	-	H-10-1-53
H-10-1-54	F-A	F1.20-B	RIGID HANGER	-	-	-	-	-	-	I2P1, HL-10-98PS1
HL-10-98PS1	C-C	C3.20	PIPE STANCHION	-	-	-	-	-	-	H-10-1-54
H-10-1-55	F-A	F1.20-B	RIGID SUPPORT	-	-	-	-	3	-	I2P1, I3P3, HL-10-98PS2
H-10-1-56	F-A	F1.20-B	RIGID SUPPORT	-	-	-	-	-	-	I2P1
H-10-1-57	F-A	F1.20-B	RIGID HANGER	-	-	-	-	-	-	I2P1, HL-10-100PS3
H-10-1-29SR	F-A	F1.20-B	LATERAL RESTRAINT	-	-	-	-	-	-	I2P1
HL-10-7-3B	C-F-2	C5.51	VALVE TO PIPE	-	Y	-	-	-	-	PRR-8
HL-10-10-1D	C-F-2	C5.51	ELBOW TO PIPE	-	Y	-	-	-	-	PRR-8
HL-10-11-1B	C-F-2	C5.51	ELBOW TO PIPE	-	Y	-	-	-	-	PRR-8
HL-10-11-1C	C-F-2	C5.51	PIPE TO ELBOW	-	Y	-	-	-	-	PRR-8
HL-10-7-1C	C-F-2	C5.51	ELBOW TO PIPE	-	Y	-	-	-	-	PRR-8
HL-10-7-1E	C-F-2	C5.51	ELBOW TO PIPE	-	Y	-	-	-	-	PRR-8
HL-10-7-2A	C-F-2	C5.51	ELBOW TO VALVE	-	Y	-	-	-	-	PRR-8
HL-10-F147	C-F-2	C5.51	PIPE TO VALVE	-	Y	-	-	-	-	PRR-8, I2P2
HL-10-7-2C	C-F-2	C5.51	ELBOW TO PIPE	-	Y	-	-	-	-	PRR-8, I2P2
HL-10-F136	C-F-2	C5.51	ELBOW TO VALVE	-	Y	-	2	-	-	PRR-8, I2P2, I3P2

COMPONENT IDENTIFICATION	ASME CODE CAT	ASME CODE ITEM	DESCRIPTION	ASME CODE EXAM	REL REQ	4TH ISI INTERVAL PER1	PER2	PER3	IGSCC CATEGORY	REMARKS
Residual Heat Removal System **Drawing Number: ISI-I-10-2B** **Line Number: 18-HL-10**										
HL-10-8-1B	C-F-2	C5.51	PIPE TO ELBOW	-	Y	-	-	-	-	PRR-8
HL-10-8-1C	C-F-2	C5.51	ELBOW TO PIPE	-	Y	-	-	-	-	PRR-8
HL-10-8-1D	C-F-2	C5.51	PIPE TO ELBOW	-	Y	-	-	-	-	PRR-8
HL-10-8-1E	C-F-2	C5.51	ELBOW TO VALVE	-	Y	-	-	-	-	PRR-8
HL-10-8-2A	C-F-2	C5.51	VALVE TO PIPE	-	Y	-	-	-	-	PRR-8
HL-10-F100	C-F-2	C5.51	NOZZLE TO PIPE	-	Y	-	2	-	-	PRR-8, I2P2, I3P2
HL-10-10-1C	C-F-2	C5.51	PIPE TO ELBOW	-	Y	-	-	-	-	PRR-8
HL-10-7-2B	C-F-2	C5.51	PIPE TO ELBOW	-	Y	-	-	-	-	PRR-8

COMPONENT IDENTIFICATION	ASME CODE CAT	ASME CODE ITEM	DESCRIPTION	ASME CODE EXAM	REL REQ	4TH ISI INTERVAL PER1	PER2	PER3	IGSCC CATEGORY	REMARKS
Residual Heat Removal System **Drawing Number: ISI-I-10-1B** **Line Number: N/A**										
HB-10-94PS	C-C	C3.20	PIPE STANCHION	-	-	-	-	-	-	-
Line Number: 18-HB-10										
HB-10-F112	C-F-2	C5.51	PIPE TO VALVE	-	Y	-	-	-	-	PRR-8
HB-10-3-1C	C-F-2	C5.51	TEE TO PIPE	-	Y	-	-	-	-	PRR-8
HB-10-3-1F	C-F-2	C5.51	REDUCER TO ELBOW	-	Y	1	-	-	-	PRR-8, I2P1, I3P1
HB-10-3-1G	C-F-2	C5.51	ELBOW TO PIPE	-	Y	-	-	-	-	PRR-8
H-10-1-47SH	F-A	F1.20-B	RIGID SUPPORT	-	-	-	-	-	-	I2P1, HB-10-294PS
HB-10-6-1C	C-F-2	C5.51	REDUCING TEE TO PIPE	-	Y	-	-	-	-	PRR-8
HB-10-6-1G	C-F-2	C5.51	ELBOW TO PIPE	-	Y	-	-	-	-	PRR-8
H-10-1-SG16	F-A	F1.20-B	LATERAL RESTRAINT	-	-	-	-	-	-	I2P1
H-10-1-SG19	F-A	F1.20-B	RESTRAINT	-	-	-	-	3	-	I2P1, I3P3, HB-10-294HL1(8)
H-10-1-135	F-A	F1.20-C	SPRING HANGER	-	-	-	-	-	-	I2P1
HB-10-294HL1(8)	C-C	C3.20	8 HANGER LUGS	-	-	-	-	3	-	I3P3, H-10-1-SG19
HB-10-6-1F	C-F-2	C5.51	REDUCER TO ELBOW	-	Y	-	-	-	-	PRR-8
HB-10-F187	C-F-2	C5.51	PIPE TO VALVE	-	Y	-	-	-	-	PRR-8
HB-10-F141	C-F-2	C5.51	PIPE TO VALVE	-	Y	-	-	-	-	PRR-8
H-10-1-134	F-A	F1.20-C	SPRING HANGER	-	-	-	-	-	-	I2P2
H-10-1-120	F-A	F1.20-C	SPRING HANGER	-	-	-	-	3	-	I2P1, I3P3
H-10-1-119	F-A	F1.20-C	SPRING HANGER	-	-	-	-	-	-	I2P1

COMPONENT IDENTIFICATION	ASME CODE CAT	ASME CODE ITEM	DESCRIPTION	ASME CODE EXAM	REL REQ	4TH ISI INTERVAL PER1	PER2	PER3	IGSCC CATEGORY	REMARKS
Residual Heat Removal System Drawing Number: ISI-I-10-1B Line Number: 18-HB-10										
HB-10-F142	C-F-2	C5.51	PIPE TO VALVE	-	Y	-	-	-	-	PRR-8, I2P1
Line Number: 20-HB-10										
HB-10-6-1E	C-F-2	C5.51	TEE TO REDUCER	-	Y	-	-	-	-	PRR-8, I2P1
HB-10-1-6D	C-F-2	C5.51	ELBOW TO PIPE	-	Y	-	-	-	-	PRR-8
HB-10-1-1B	C-F-2	C5.51	PIPE TO ELBOW	-	Y	-	-	-	-	PRR-8
HB-10-F231	C-F-2	C5.51	PIPE TO ELBOW	-	Y	-	-	-	-	PRR-8
HB-10-F231A	C-F-2	C5.51	PIPE TO ELBOW	-	Y	-	-	-	-	PRR-8
HB-10-3-1E	C-F-2	C5.51	TEE TO REDUCER	-	Y	1	-	-	-	PRR-8, I2P1, I3P1
HB-10-1-9B	C-F-2	C5.51	ELBOW TO PIPE	-	Y	-	-	-	-	PRR-8, I2P1
HB-10-1-7B	C-F-2	C5.51	PIPE TO ELBOW	-	Y	-	-	-	-	PRR-8
HB-10-6-1B	C-F-2	C5.51	PIPE TO TEE	-	Y	-	-	-	-	PRR-8
HB-10-1-10B	C-F-2	C5.51	ELBOW TO PIPE	-	Y	1	-	-	-	PRR-8, I2P1, I3P1
HB-10-294PS	C-C	C3.20	PIPE STANCHION	-	-	-	-	-	-	H-10-1-47SH
HB-10-82HL1(2)	C-C	C3.20	SUPPORT LUGS	-	-	-	-	-	-	H-10-1-45SR
HB-10-83HL1(4)	C-C	C3.20	SUPPORT LUGS	-	-	-	2	-	-	I2P1, I3P2, H-10-1-5
HB-10-83PS	C-C	C3.20	PIPE STANCHION	-	-	-	-	3	-	I2P3, I3P3, H-10-1-44SA
HB-10-89PS1	C-C	C3.20	PIPE STANCHION	-	-	-	-	-	-	H-10-1-51SR
HB-10-89PS2	C-C	C3.20	PIPE STANCHION	-	-	-	-	-	-	-
HB-10-91PS	C-C	C3.20	PIPE STANCHION	-	-	-	2	-	-	I2P2, I3P2, H-10-1-57SA

COMPONENT IDENTIFICATION	ASME CODE CAT	ASME CODE ITEM	DESCRIPTION	ASME CODE EXAM	REL REQ	4TH ISI INTERVAL PER1	PER2	PER3	IGSCC CATEGORY	REMARKS
Residual Heat Removal System **Drawing Number: ISI-I-10-1B** **Line Number: 20-HB-10**										
HB-10-1-2D	C-F-2	C5.51	PIPE TO ELBOW	-	Y	-	-	-	-	PRR-8
HB-10-94HL1(2)	C-C	C3.20	SUPPORT LUGS	-	-	-	-	-	-	-
HB-10-1-6C	C-F-2	C5.51	PIPE TO ELBOW	-	Y	-	-	-	-	PRR-8
HB-10-1-11B	C-F-2	C5.51	ELBOW TO PIPE	-	Y	-	-	-	-	PRR-8
HB-10-1-12B	C-F-2	C5.51	ELBOW TO ELBOW	-	Y	-	-	-	-	PRR-8
HB-10-1-12C	C-F-2	C5.51	ELBOW TO PIPE	-	Y	-	-	-	-	PRR-8
HB-10-F294	C-F-2	C5.51	PIPE TO TEE	-	Y	-	-	-	-	PRR-8, I2P1
HB-10-1-2C	C-F-2	C5.51	TEE TO PIPE	-	Y	-	-	-	-	PRR-8
HB-10-F232	C-F-2	C5.51	ELBOW TO PIPE	-	Y	-	-	-	-	PRR-8, I2P1
HB-10-1-5B	C-F-2	C5.51	PIPE TO ELBOW	-	Y	-	-	-	-	PRR-8, I2P1
HB-10-1-6B	C-F-2	C5.51	ELBOW TO PIPE	-	Y	-	-	-	-	PRR-8
HB-10-92HL1(4)	C-C	C3.20	4 HANGER LUGS	-	-	-	2	-	-	I2P2, I3P2, H-10-1-10
H-10-1-57SA	F-A	F1.20-B	ANCHOR	-	-	-	-	-	-	I2P2, HB-10-91PS
HB-10-F235	C-F-2	C5.51	ELBOW TO PIPE	-	Y	-	-	-	-	PRR-8
H-10-1-54SH	F-A	F1.20-A	RIGID HANGER	-	-	-	-	-	-	I2P1, I3P3
H-10-1-56SH	F-A	F1.20-A	RIGID HANGER	-	-	-	-	-	-	I2P1
H-10-1-1220	F-A	F1.20-B	GUIDE	-	-	-	-	-	-	I2P1
H-10-1-44SA	F-A	F1.20-B	ANCHOR	-	-	-	2	-	-	I2P2, I3P2, HB-10-83PS
H-10-1-45SR	F-A	F1.20-B	GUIDE	-	-	-	-	-	-	I2P2, HB-10-82HL1(2)

COMPONENT IDENTIFICATION	ASME CODE CAT	ASME CODE ITEM	DESCRIPTION	ASME CODE EXAM	REL REQ	4TH ISI INTERVAL PER1	PER2	PER3	IGSCC CATEGORY	REMARKS
Residual Heat Removal System **Drawing Number: ISI-I-10-1B** **Line Number: 20-HB-10**										
H-10-1-49SG	F-A	F1.20-B	GUIDE	-	-	-	2	-	-	I2P2, I3P2, HB-10-F28
H-10-1-51SR	F-A	F1.20-B	RESTRAINT	-	-	-	-	-	-	I2P1, HB-10-89PS1
H-10-1-50SH	F-A	F1.20-A	RIGID HANGER	-	-	-	-	-	-	I2P1
H-10-1-55SR	F-A	F1.20-B	RESTRAINT	-	-	-	-	-	-	I2P1
H-10-1-43SH	F-A	F1.20-A	RIGID HANGER	-	-	-	-	-	-	I2P1
H-10-1-58SR	F-A	F1.20-B	GUIDE	-	-	-	-	-	-	I2P1
H-10-1-60SH	F-A	F1.20-B	RIGID HANGER	-	-	-	-	-	-	I2P1
H-10-1-1	F-A	F1.20-C	SPRING HANGER	-	-	-	-	-	-	I2P1
H-10-1-10	F-A	F1.20-C	SPRING HANGER	-	-	-	-	-	-	I2P1, HB-10-92HL1(4)
H-10-1-2	F-A	F1.20-C	SPRING HANGER	-	-	-	-	-	-	I2P1
H-10-1-3	F-A	F1.20-C	SPRING HANGER	-	-	-	-	-	-	I2P1
H-10-1-46SS	F-A	F1.20-C	SPRING HANGER	-	-	-	-	-	-	I2P1
H-10-1-5	F-A	F1.20-C	SPRING HANGER	-	-	-	-	3	-	I2P3, I3P3, HB-10-83HL1(4)
H-10-1-52SR	F-A	F1.20-B	RESTRAINT	-	-	-	-	-	-	I2P1
HB-10-F87	C-F-2	C5.51	PIPE TO ELBOW	-	Y	-	-	-	-	PRR-8
HB-10-F234	C-F-2	C5.51	PIPE TO ELBOW	-	Y	-	-	-	-	PRR-8
HB-10-28HL1(2)	C-C	C3.20	2 HANGER LUGS	-	-	-	-	3	-	I2P3, I3P3
HB-10-F28	C-F-2	C5.51	VALVE TO PIPE	-	Y	-	-	-	-	PRR-8, H-10-49SG
H-10-1-59SH	F-A	F1.20-C	SPRING HANGER	-	-	-	-	-	-	I2P1

COMPONENT IDENTIFICATION	ASME CODE CAT	ASME CODE ITEM	DESCRIPTION	ASME CODE EXAM	REL REQ	4TH ISI INTERVAL PER1	PER2	PER3	IGSCC CATEGORY	REMARKS
Residual Heat Removal System **Drawing Number: ISI-I-10-1B** **Line Number: 20-HB-10**										
HB-10-F81	C-F-2	C5.51	PIPE TO PIPE	-	Y	-	-	-	-	PRR-8
HB-10-F82	C-F-2	C5.51	ELBOW TO ELBOW	-	Y	-	-	-	-	PRR-8
HB-10-F83	C-F-2	C5.51	TEE TO PIPE	-	Y	-	-	-	-	PRR-8, I2P1
HB-10-F84	C-F-2	C5.51	PIPE TO PIPE	-	Y	-	-	-	-	PRR-8
H-10-1-53SH	F-A	F1.20-A	RIGID HANGER	-	-	-	-	-	-	I2P1
HB-10-F86	C-F-2	C5.51	PIPE TO TEE	-	Y	-	-	-	-	PRR-8
HB-10-F233	C-F-2	C5.51	PIPE TO ELBOW	-	Y	-	-	-	-	PRR-8
HB-10-F88	C-F-2	C5.51	ELBOW TO PIPE	-	Y	-	-	-	-	PRR-8
HB-10-F89	C-F-2	C5.51	ELBOW TO PIPE	-	Y	-	-	-	-	PRR-8
HB-10-F90	C-F-2	C5.51	PIPE TO ELBOW	-	Y	-	-	-	-	PRR-8, I2P1
HB-10-F91	C-F-2	C5.51	PIPE TO ELBOW	-	Y	-	-	-	-	PRR-8
HB-10-F92	C-F-2	C5.51	PIPE TO ELBOW	-	Y	1	-	-	-	PRR-8, I2P1, I3P1
HB-10-F93	C-F-2	C5.51	PIPE TO ELBOW	-	Y	-	-	-	-	PRR-8
HB-10-F94	C-F-2	C5.51	PIPE TO PIPE	-	Y	-	-	-	-	PRR-8
H-10-1-42SH	F-A	F1.20-A	RIGID HANGER	-	-	-	-	-	-	I2P1
HB-10-F85	C-F-2	C5.51	TEE TO PIPE	-	Y	-	-	-	-	PRR-8

COMPONENT IDENTIFICATION	ASME CODE CAT	ASME CODE ITEM	DESCRIPTION	ASME CODE EXAM	REL REQ	4TH ISI INTERVAL PER1	PER2	PER3	IGSCC CATEGORY	REMARKS
Residual Heat Removal System Drawing Number: ISI-I-10-1C Line Number: N/A										
SLT RHR-12	C-H	C7.10	PRESSURE BOUNDARY	VT-2	-	1	2	3	-	-
SLT RHR-13	C-H	C7.10	PRESSURE BOUNDARY	VT-2	-	1	2	3	-	-
SLT RHR-14	C-H	C7.10	PRESSURE BOUNDARY	VT-2	-	1	2	3	-	-
Line Number: 6-HB-10										
HB-10-64HL1(4)	C-C	C3.20	SUPPORT LUGS	-	-	-	-	-	-	H-10-1-187
HB-10-3003-4-2	C-F-2	C5.51	PIPE TO ELBOW	-	Y	-	-	-	-	PRR-8
HB-10-3003-4-1	C-F-2	C5.51	ELBOW TO PIPE	-	Y	-	-	-	-	PRR-8
HB-10-3003-2-3	C-F-2	C5.51	ELBOW TO PIPE	-	Y	-	-	-	-	PRR-8, I2P1
HB-10-3003-2-2	C-F-2	C5.51	PIPE TO ELBOW	-	Y	-	-	3	-	PRR-8, I2P3, I3P3
HB-10-3003-2-1	C-F-2	C5.51	ELBOW TO PIPE	-	Y	-	-	-	-	PRR-8
HB-10-2-1E	C-F-2	C5.51	PIPE TO ELBOW	-	Y	-	-	-	-	PRR-8, I2P1
HB-10-2-1D	C-F-2	C5.51	ELBOW TO PIPE	-	Y	-	-	-	-	PRR-8
HB-10-3003-4-3	C-F-2	C5.51	ELBOW TO PIPE	-	Y	-	-	-	-	PRR-8
HB-10-64PS(2)	C-C	C3.20	PIPE STANCHION	-	-	-	-	-	-	H-10-1-13SA
HB-10-F65	C-F-2	C5.51	PIPE TO PIPE	-	Y	-	-	-	-	PRR-8
HB-10-2-1C	C-F-2	C5.51	PIPE TO ELBOW	-	Y	-	-	-	-	PRR-8
HB-10-2-1B	C-F-2	C5.51	ELBOW TO PIPE	-	Y	-	-	-	-	PRR-8
HB-10-80PS2	C-C	C3.20	PIPE STANCHION	-	-	-	-	-	-	H-10-1-185

COMPONENT IDENTIFICATION	ASME CODE CAT	ASME CODE ITEM	DESCRIPTION	ASME CODE EXAM	REL REQ	4TH ISI INTERVAL PER1	PER2	PER3	IGSCC CATEGORY	REMARKS
Residual Heat Removal System **Drawing Number: ISI-I-10-1C** **Line Number: 6-HB-10**										
HB-10-80PS1	C-C	C3.20	PIPE STANCHION	-	-	-	-	-	-	H-10-1-184
HB-10-79PS2	C-C	C3.20	PIPE STANCHION	-	-	-	-	-	-	H-10-1-183
HB-10-79PS1	C-C	C3.20	PIPE STANCHION	-	-	-	-	-	-	H-10-1-77SS
HB-10-63HL2(3)	C-C	C3.20	SUPPORT LUGS	-	-	-	-	-	-	H-10-1-14SG
HB-10-F96	C-F-2	C5.51	PIPE TO ELBOW	-	Y	-	-	-	-	PRR-8
H-10-1-186	F-A	F1.20-C	SPRING HANGER	-	-	-	-	-	-	I2P3, HB-10-63HL1(4)
H-10-1-185	F-A	F1.20-C	SPRING SUPPORT	-	-	-	-	-	-	I2P3, HB-10-80PS2
H-10-1-184	F-A	F1.20-C	SPRING SUPPORT	-	-	-	-	-	-	I2P3, HB-10-80PS1
H-10-1-183	F-A	F1.20-C	SPRING SUPPORT	-	-	-	-	-	-	I2P1, HB-10-79PS2
H-10-1-182	F-A	F1.20-C	SPRING HANGER	-	-	1	-	-	-	I2P1, I3P1
H-10-1-17SS	F-A	F1.20-B	RIGID HANGER	-	-	1	-	-	-	I2P1, I3P1, HB-10-79PS1
H-10-1-16SR	F-A	F1.20-B	RESTRAINT	-	-	-	-	-	-	I2P1
HB-10-F63	C-F-2	C5.51	ELBOW TO PIPE	-	Y	-	-	-	-	PRR-8, I2P3
H-10-1-13SA	F-A	F1.20-B	ANCHOR	-	-	-	-	-	-	HB-10-64PS(2)
HB-10-3003-4-4	C-F-2	C5.51	PIPE TO ELBOW	-	Y	-	-	-	-	PRR-8
HB-10-F95	C-F-2	C5.51	ELBOW TO TEE	-	Y	-	-	-	-	PRR-8, I2P1
HB-10-F81A	C-F-2	C5.51	PIPE TO ELBOW	-	Y	-	-	-	-	PRR-8
HB-10-F80	C-F-2	C5.51	PIPE TO PIPE	-	Y	-	-	-	-	PRR-8
HB-10-F79	C-F-2	C5.51	VALVE TO ELBOW	-	Y	-	-	3	-	PRR-8, I2P3, I3P3

COMPONENT IDENTIFICATION	ASME CODE CAT	ASME CODE ITEM	DESCRIPTION	ASME CODE EXAM	REL REQ	4TH ISI INTERVAL PER1	PER2	PER3	IGSCC CATEGORY	REMARKS
Residual Heat Removal System **Drawing Number: ISI-I-10-1C** **Line Number: 6-HB-10**										
H-10-1-187	F-A	F1.20-C	SPRING HANGER	-	-	-	-	-	-	LTP 568, I2P3, HB-10-64HL1(4)
HB-10-F64	C-F-2	C5.51	PIPE TO PIPE	-	Y	-	-	-	-	PRR-8
HB-10-63HL1(4)	C-C	C3.20	SUPPORT LUGS	-	-	-	-	-	-	H-10-1-186
H-10-1-14SG	F-A	F1.20-B	GUIDE	-	-	-	-	-	-	I2P3, HB-10-63HL2(3)

COMPONENT IDENTIFICATION	ASME CODE CAT	ASME CODE ITEM	DESCRIPTION	ASME CODE EXAM	REL REQ	4TH ISI INTERVAL PER1	PER2	PER3	IGSCC CATEGORY	REMARKS
Residual Heat Removal System										
Drawing Number: ISI-I-10-3A/4A										
Line Number: 18-GB-10										
GB-10-F72	C-F-2	C5.51	PIPE TO PIPE	-	Y	-	-	-	-	PRR-8, I2P1

COMPONENT IDENTIFICATION	ASME CODE CAT	ASME CODE ITEM	DESCRIPTION	ASME CODE EXAM	REL REQ	4TH ISI INTERVAL PER1	PER2	PER3	IGSCC CATEGORY	REMARKS
Residual Heat Removal System Drawing Number: ISI-I-10-3B Line Number: N/A										
GB-10-VBW67D-2	C-G	C6.20	VALVE BODY WELD	-	-	-	-	-	-	-
GB-10-VBW67B-1	C-G	C6.20	VALVE BODY WELD	-	-	-	-	-	-	-
GB-10-VBW67B-2	C-G	C6.20	VALVE BODY WELD	-	-	-	-	-	-	-
GB-10-VBW67D-1	C-G	C6.20	VALVE BODY WELD	-	-	-	-	-	-	-
Line Number: 12-GB-10										
GB-10-F171	C-F-2	C5.51	ELBOW TO VALVE	-	Y	-	2	-	-	PRR-8, I2P2, I3P2
GB-10-F170	C-F-2	C5.51	VALVE TO ELBOW	-	Y	-	-	-	-	PRR-8, I2P1
GB-10-F169	C-F-2	C5.51	ELBOW TO VALVE	-	Y	-	-	-	-	PRR-8
GB-10-F168	C-F-2	C5.51	PUMP TO PIPE	-	Y	-	-	-	-	PRR-8, I2P1
GB-10-F167	C-F-2	C5.51	PUMP TO PIPE	-	Y	-	2	-	-	PRR-8, I2P2, I3P2
GB-10-F166	C-F-2	C5.51	ELBOW TO VALVE	-	Y	-	-	-	-	PRR-8
GB-10-F165	C-F-2	C5.51	VALVE TO ELBOW	-	Y	-	-	-	-	PRR-8
GB-10-224HL1(8)	N/A	N/A	SUPPORT LUGS	-	-	-	-	-	-	LUGS DO NOT EXIST; FORMERLY GB-10-163HL1(8)
GB-10-F172	C-F-2	C5.51	VALVE TO PIPE	-	Y	-	-	-	-	PRR-8
GB-10-14-3D-F	C-F-2	C5.51	PIPE TO REDUCER	-	Y	-	-	-	-	PRR-8
GB-10-F164	C-F-2	C5.51	ELBOW TO VALVE	-	Y	-	-	-	-	PRR-8, I2P3
GB-10-14-3C-B	C-F-2	C5.51	PIPE TO ELBOW	-	Y	-	-	-	-	PRR-8
GB-10-14-3A-E	C-F-2	C5.51	ELBOW TO PIPE	-	Y	-	-	-	-	PRR-8
GB-10-14-3A-D	C-F-2	C5.51	PIPE TO ELBOW	-	Y	-	-	-	-	PRR-8

COMPONENT IDENTIFICATION	ASME CODE CAT	ASME CODE ITEM	DESCRIPTION	ASME CODE EXAM	REL REQ	4TH ISI INTERVAL PER1	PER2	PER3	IGSCC CATEGORY	REMARKS
Residual Heat Removal System **Drawing Number: ISI-I-10-3B** **Line Number: 12-GB-10**										
GB-10-14-1E	C-F-2	C5.51	PIPE TO ELBOW	-	Y	-	-	-	-	PRR-8
GB-10-13-4B	C-F-2	C5.51	PIPE TO WELD-O-LET	-	Y	-	-	-	-	PRR-8, I2P3
GB-10-13-3C-B	C-F-2	C5.51	PIPE TO ELBOW	-	Y	-	-	-	-	PRR-8
GB-10-13-3A-D	C-F-2	C5.51	PIPE TO ELBOW	-	Y	-	-	-	-	PRR-8
GB-10-13-1E	C-F-2	C5.51	PIPE TO ELBOW	-	Y	-	-	-	-	PRR-8
GB-10-172HL1(8)	C-C	C3.20	SUPPORT LUGS	-	-	-	-	-	-	H-10-1-SG20
GB-10-165PS	C-C	C3.20	PIPE STANCHION	-	-	-	-	-	-	H-10-1-93S
GB-10-170PS	C-C	C3.20	PIPE STANCHION	-	-	-	-	-	-	H-10-1-92S
GB-10-F163	C-F-2	C5.51	VALVE TO PIPE	-	Y	-	-	-	-	PRR-8, I2P1
GB-10-F282	C-F-2	C5.51	ELBOW TO PIPE	-	Y	-	-	-	-	PRR-8
H-10-1-SG21	F-A	F1.20-B	LATERAL RESTRAINT	-	-	-	-	-	-	I2P1
H-10-1-SG20	F-A	F1.20-B	LATERAL RESTRAINT	-	-	-	-	-	-	I2P1, GB-10-172HL1(8)
GB-10-F162	C-F-2	C5.51	ELBOW TO PIPE	-	Y	-	-	-	-	PRR-8
H-10-1-92S	F-A	F1.20-C	SPRING HANGER	-	-	-	-	3	-	I2P1, I3P3, GB-10-170PS
H-10-1-93S	F-A	F1.20-C	SPRING HANGER	-	-	-	-	-	-	I2P1, GB-10-165PS
GB-10-F222	C-F-2	C5.51	PIPE TO PIPE	-	Y	-	-	-	-	PRR-8
GB-10-F223	C-F-2	C5.51	PIPE TO PIPE	-	Y	-	-	-	-	PRR-8
GB-10-F224	C-F-2	C5.51	PIPE TO PIPE	-	Y	-	-	-	-	PRR-8
GB-10-F225	C-F-2	C5.51	ELBOW TO PIPE	-	Y	-	-	-	-	PRR-8

COMPONENT IDENTIFICATION	ASME CODE CAT	ASME CODE ITEM	DESCRIPTION	ASME CODE EXAM	REL REQ	4TH ISI INTERVAL PER1	PER2	PER3	IGSCC CATEGORY	REMARKS
Residual Heat Removal System **Drawing Number: ISI-I-10-3B** **Line Number: 16-GB-10**										
GB-10-14-5C	C-F-2	C5.51	ELBOW TO PIPE	-	Y	-	-	-	-	PRR-8
H-10-1-117	F-A	F1.20-C	SPRING HANGER	-	-	-	-	-	-	I2P1
GB-10-13-5E	C-F-2	C5.51	ELBOW TO PIPE	-	Y	-	-	-	-	PRR-8
GB-10-13-4G	C-F-2	C5.51	ELBOW TO PIPE	-	Y	-	-	-	-	PRR-8
GB-10-13-4F	C-F-2	C5.51	PIPE TO REDUCER	-	Y	-	-	-	-	PRR-8, I2P3
GB-10-13-5D	C-F-2	C5.51	PIPE TO ELBOW	-	Y	-	-	-	-	PRR-8
GB-10-13-5C	C-F-2	C5.51	ELBOW TO PIPE	-	Y	-	-	-	-	PRR-8
GB-10-13-4I	C-F-2	C5.51	ELBOW TO PIPE	-	Y	-	-	-	-	PRR-8
H-10-1-116	F-A	F1.20-C	SPRING HANGER	-	-	-	-	-	-	I2P1
GB-10-13-5F	C-F-2	C5.51	PIPE TO ELBOW	-	Y	-	-	-	-	PRR-8
GB-10-13-4H	C-F-2	C5.51	PIPE TO ELBOW	-	Y	-	-	-	-	PRR-8
GB-10-14-5B	C-F-2	C5.51	PIPE TO ELBOW	-	Y	-	-	-	-	PRR-8
H-10-1-94S	F-A	F1.20-B	RESTRAINT	-	-	-	-	3	-	I2P1, I3P3, GB-10-159PS
GB-10-F158	C-F-2	C5.51	PIPE TO PIPE (HX)	-	Y	-	-	-	-	PRR-8, I2P2
GB-10-F159	C-F-2	C5.51	PIPE TO VALVE	-	Y	-	-	-	-	PRR-8
GB-10-F160	C-F-2	C5.51	VALVE TO ELBOW	-	Y	-	-	-	-	PRR-8, I2P2
GB-10-159PS	C-C	C3.20	PIPE STANCHION	-	-	-	-	-	-	H-10-1-94S
GB-10-F177	C-F-2	C5.51	PIPE (HX) TO PIPE	-	Y	-	2	-	-	PRR-8, I2P2, I3P2

COMPONENT IDENTIFICATION	ASME CODE CAT	ASME CODE ITEM	DESCRIPTION	ASME CODE EXAM	REL REQ	4TH ISI INTERVAL PER1	PER2	PER3	IGSCC CATEGORY	REMARKS
Residual Heat Removal System Drawing Number: ISI-I-10-3B Line Number: 16-GB-10										
GB-10-F175	C-F-2	C5.51	TEE TO VALVE	-	Y	-	-	-	-	PRR-8
GB-10-F176	C-F-2	C5.51	VALVE TO PIPE	-	Y	-	-	-	-	PRR-8
H-10-1-99S	F-A	F1.20-B	LATERAL RESTRAINT	-	-	-	-	-	-	I2P1
Line Number: 18-GB-10										
GB-10-174HL2(2)	C-C	C3.20	SUPPORT LUGS	-	-	-	-	-	-	H-10-1-98S
GB-10-13-4E	C-F-2	C5.51	REDUCER TO PIPE	-	Y	-	-	-	-	PRR-8, I2P3
H-10-1-98S	F-A	F1.20-C	SNUBBER	-	-	-	-	-	-	I2P1, GB-10-174HL2(2)
GB-10-161PS	C-C	C3.20	PIPE STANCHION	-	-	-	-	-	-	H-10-1-95S
GB-10-174HL1(2)	C-C	C3.20	SUPPORT LUGS	-	-	-	2	-	-	I2P1, I3P2, H-10-1-96S
H-10-1-97S	F-A	F1.20-B	RIGID HANGER	-	-	-	-	-	-	I2P1
H-10-1-96S	F-A	F1.20-B	GUIDE	-	-	-	-	3	-	I2P1, I3P3, GB-10-174HL1(2)
GB-10-14-3D-G	C-F-2	C5.51	REDUCER TO TEE	-	Y	-	-	-	-	PRR-8, I2P2
GB-10-F174	C-F-2	C5.51	VALVE TO ELBOW	-	Y	-	-	-	-	PRR-8
GB-10-14-3D-I	C-F-2	C5.51	TEE TO PIPE	-	Y	-	-	-	-	PRR-8, I2P1
GB-10-14-4B	C-F-2	C5.51	ELBOW TO PIPE	-	Y	-	-	-	-	PRR-8
GB-10-14-4C	C-F-2	C5.51	PIPE TO TEE	-	Y	-	-	-	-	PRR-8
GB-10-14-4D	C-F-2	C5.51	TEE TO PIPE	-	Y	-	-	-	-	PRR-8
GB-10-14-4E	C-F-2	C5.51	PIPE TO ELBOW	-	Y	-	-	-	-	PRR-8
GB-10-F161	C-F-2	C5.51	PIPE TO TEE	-	Y	-	-	-	-	PRR-8, I2P2

COMPONENT IDENTIFICATION	ASME CODE CAT	ASME CODE ITEM	DESCRIPTION	ASME CODE EXAM	REL REQ	4TH ISI INTERVAL PER1	PER2	PER3	IGSCC CATEGORY	REMARKS
Residual Heat Removal System **Drawing Number: ISI-I-10-3B** **Line Number: 18-GB-10**										
H-10-1-114	F-A	F1.20-A	RIGID HANGER	-	-	-	-	-	-	I2P1
GB-10-13-4C	C-F-2	C5.81	WELDOLET TO PIPE	-	-	-	-	-	-	I2P2
GB-10-F173	C-F-2	C5.51	PIPE TO VALVE	-	Y	-	2	-	-	PRR-8, I2P1, I3P2
H-10-1-95S	F-A	F1.20-B	LATERAL RESTRAINT	-	-	-	-	-	-	I2P1, GB-10-161PS

COMPONENT IDENTIFICATION	ASME CODE CAT	ASME CODE ITEM	DESCRIPTION	ASME CODE EXAM	REL REQ	4TH ISI INTERVAL PER1	PER2	PER3	IGSCC CATEGORY	REMARKS
Residual Heat Removal System										
Drawing Number: ISI-I-10-3B/4B										
Line Number: 18-GB-10										
GB-10-F18	C-F-2	C5.51	PIPE TO PIPE	-	Y	-	-	-	-	PRR-8

COMPONENT IDENTIFICATION	ASME CODE CAT	ASME CODE ITEM	DESCRIPTION	ASME CODE EXAM	REL REQ	4TH ISI INTERVAL PER1	PER2	PER3	IGSCC CATEGORY	REMARKS
Residual Heat Removal System Drawing Number: ISI-I-10-5BSH1 Line Number: 12-GB-10										
GB-10-F329	C-F-2	C5.51	WELDOLET TO PIPE	-	Y	-	-	-	-	PRR-8, I2P3
GB-10-154PS	C-C	C3.20	PIPE STANCHION	-	-	-	-	-	-	H-10-1-40SA
GB-10-F329A	C-F-2	C5.51	PIPE TO PIPE	-	Y	-	-	-	-	PRR-8
H-10-1-107	F-A	F1.20-B	RIGID HANGER	-	-	-	-	-	-	I2P1
GB-10-F27	C-F-2	C5.51	PIPE TO ELBOW	-	Y	-	-	-	-	PRR-8
GB-10-F155	C-F-2	C5.51	PIPE TO VALVE	-	Y	-	-	-	-	PRR-8
H-10-1-40SA	F-A	F1.20-B	RIGID HANGER	-	-	-	-	-	-	I2P1, GB-10-154PS
GB-10-F153R	C-F-2	C5.51	PIPE TO VALVE	-	Y	-	-	3	-	PRR-8, I2P3, I3P3
GB-10-12-1D	C-F-2	C5.51	ELBOW TO PIPE	-	Y	-	-	-	-	PRR-8
GB-10-12-1C	C-F-2	C5.51	PIPE TO ELBOW	-	Y	-	-	-	-	PRR-8
GB-10-12-1B	C-F-2	C5.51	ELBOW TO PIPE	-	Y	-	-	-	-	PRR-8
GB-10-F154	C-F-2	C5.51	VALVE TO PIPE	-	Y	-	-	-	-	PRR-8
GB-10-12-2B	C-F-2	C5.81	PIPE TO WELDOLET	-	-	-	-	-	-	-
Line Number: 12-HL-10										
HL-10-2-1E	C-F-2	C5.51	PIPE TO ELBOW	-	Y	-	2	-	-	PRR-8, I2P2, I3P2
HL-10-F150	C-F-2	C5.51	PIPE TO ELBOW	-	Y	-	-	-	-	PRR-8
HL-10-9-2G	C-F-2	C5.51	WELDOLET TO ELBOW	-	Y	-	-	-	-	PRR-8
HL-10-9-1F	C-F-2	C5.51	ELBOW TO PIPE	-	Y	-	-	-	-	PRR-8
HL-10-152HL1(2)	C-C	C3.20	SUPPORT LUGS	-	-	-	2	-	-	I3P2, H-10-1-41SG

COMPONENT IDENTIFICATION	ASME CODE CAT	ASME CODE ITEM	DESCRIPTION	ASME CODE EXAM	REL REQ	4TH ISI INTERVAL PER1	PER2	PER3	IGSCC CATEGORY	REMARKS
Residual Heat Removal System **Drawing Number: ISI-I-10-5BSH1** **Line Number: 12-HL-10**										
HL-10-9-1B	C-F-2	C5.51	WELDOLET	-	Y	-	-	-	-	PRR-8
HL-10-2-3B	C-F-2	C5.51	PIPE TO REDUCER	-	Y	-	-	-	-	PRR-8
HL-10-2-2C	C-F-2	C5.51	PIPE TO ELBOW	-	Y	-	-	-	-	PRR-8
HL-10-2-1F	C-F-2	C5.51	ELBOW TO PIPE	-	Y	-	-	-	-	PRR-8
HL-10-F152A	C-F-2	C5.51	PIPE TO PIPE	-	Y	-	-	-	-	PRR-8
HL-10-79PS	C-C	C3.20	PIPE STANCHION	-	-	-	-	3	-	I2P3, I3P3, H-10-1-238
H-10-1-238	**F-A**	**F1.20-B**	**GUIDE**	-	-	-	-	-	-	**HL-10-79PS**
HL-10-9-2B	C-F-2	C5.51	ELBOW TO PIPE	-	Y	-	-	-	-	PRR-8
HL-10-2-2B	C-F-2	C5.51	ELBOW TO PIPE	-	Y	-	-	-	-	PRR-8
HL-10-F152R	C-F-2	C5.51	VALVE TO PIPE	-	Y	-	-	-	-	PRR-8
HL-10-9-1E	C-F-2	C5.51	PIPE TO ELBOW	-	Y	-	-	-	-	PRR-8
H-10-1-A8474	F-A	F1.20-B	ANCHOR	-	-	-	-	-	-	I2P1
H-10-1-76	F-A	F1.20-A	RIGID HANGER	-	-	1	-	-	-	I2P1 , I3P1
HL-10-F152B	C-F-2	C5.51	PIPE TO PIPE	-	Y	-	-	-	-	PRR-8
H-10-1-77	F-A	F1.20-B	RIGID HANGER	-	-	-	-	-	-	I2P1
H-10-1-110	F-A	F1.20-B	RIGID HANGER	-	-	-	-	-	-	I2P1
H-10-1-75	F-A	F1.20-B	RIGID HANGER	-	-	-	-	-	-	I2P1
H-10-1-41SG	F-A	F1.20-B	GUIDE	-	-	-	2	-	-	I2P1, I3P2, HL-10-152HL1(2)
HL-10-F79	C-F-2	C5.51	ELBOW TO PIPE	-	Y	-	-	-	-	PRR-8, I2P3

COMPONENT IDENTIFICATION	ASME CODE CAT	ASME CODE ITEM	DESCRIPTION	ASME CODE EXAM	REL REQ	4TH ISI INTERVAL PER1	PER2	PER3	IGSCC CATEGORY	REMARKS
Residual Heat Removal System										
Drawing Number: ISI-I-10-5BSH1										
Line Number: 12-HL-10										
HL-10-F78	C-F-2	C5.51	PIPE TO ELBOW	-	Y	-	-	-	-	PRR-8
HL-10-F77	C-F-2	C5.51	ELBOW TO PIPE	-	Y	-	-	-	-	PRR-8
Line Number: 16-HL-10										
HL-10-2-3C	C-F-2	C5.51	REDUCER TO ELBOW	-	Y	-	-	-	-	PRR-8
HL-10-F76	C-F-2	C5.51	ELBOW TO NOZZLE	-	Y	-	-	3	-	PRR-8, I2P3, I3P3
Line Number: 6-GB-10										
GB-10-F156	C-F-2	C5.51	PIPE TO VALVE	-	Y	-	-	-	-	PRR-8
GB-10-12-2D	C-F-2	C5.51	WELDOLET TO PIPE	-	Y	-	-	3	-	PRR-8, I2P3, I3P3
Line Number: 6-HL-10										
HL-10-1-1B	C-F-2	C5.51	ELBOW TO PIPE	-	Y	-	-	-	-	PRR-8, I2P3
HL-10-1-2F	C-F-2	C5.51	ELBOW TO PIPE	-	Y	-	-	-	-	PRR-8
H-10-1-106	F-A	F1.20-B	RIGID HANGER	-	-	-	-	3	-	I2P3, I3P3
H-10-1-78	F-A	F1.20-B	RIGID HANGER	-	-	-	-	-	-	I2P1
H-10-1-79	F-A	F1.20-B	RIGID HANGER	-	-	-	-	-	-	I2P1
HL-10-75HL1(2)	C-C	C3.20	SUPPORT LUGS	-	-	-	-	-	-	H-10-1-111
H-10-1-111	F-A	F1.20-B	GUIDE	-	-	-	-	-	-	I2P1, HL-10-75HL1(2)
HL-10-9-1C	C-F-2	C5.51	PIPE TO WELDOLET	-	Y	-	-	-	-	PRR-8
HL-10-F157	C-F-2	C5.51	VALVE TO PIPE	-	Y	-	-	-	-	PRR-8

COMPONENT IDENTIFICATION	ASME CODE CAT	ASME CODE ITEM	DESCRIPTION	ASME CODE EXAM	REL REQ	4TH ISI INTERVAL PER1	PER2	PER3	IGSCC CATEGORY	REMARKS
Residual Heat Removal System										
Drawing Number: ISI-I-10-5BSH1										
Line Number: 6-HL-10										
HL-10-F157A	C-F-2	C5.51	PIPE TO VALVE	-	Y	-	-	-	-	PRR-8
HL-10-9-2DR	C-F-2	C5.51	PIPE TO WELDOLET	-	Y	-	-	-	-	PRR-8
HL-10-9-2C	C-F-2	C5.51	WELDOLET	-	Y	-	-	-	-	PRR-8, I2P3
HL-10-1-2D	C-F-2	C5.51	ELBOW TO PIPE	-	Y	-	-	-	-	PRR-8
HL-10-F73	C-F-2	C5.51	PIPE TO NOZZLE	-	Y	-	-	3	-	PRR-8, I2P3, I3P3
HL-10-F74	C-F-2	C5.51	PIPE TO ELBOW	-	Y	-	-	-	-	PRR-8
HL-10-F75	C-F-2	C5.51	VALVE TO ELBOW	-	Y	-	-	-	-	PRR-8, I2P3
HL-10-1-2B	C-F-2	C5.51	ELBOW TO PIPE	-	Y	-	-	-	-	PRR-8
HL-10-1-2C	C-F-2	C5.51	PIPE TO ELBOW	-	Y	-	-	-	-	PRR-8
HL-10-1-2E	C-F-2	C5.51	PIPE TO ELBOW	-	Y	-	-	-	-	PRR-8
HL-10-1-2G	C-F-2	C5.51	PIPE TO ELBOW	-	Y	-	-	-	-	PRR-8
HL-10-1-2H	C-F-2	C5.51	ELBOW TO PIPE	-	Y	-	-	-	-	PRR-8
HL-10-F157B	C-F-2	C5.51	VALVE TO PIPE	-	Y	-	-	-	-	PRR-8
Line Number: N/A										
H-26-1-3SA	F-A-CL4	F1.20-B	ANCHOR	-	-	-	2	-	-	I2P1, I3P2

COMPONENT IDENTIFICATION	ASME CODE CAT	ASME CODE ITEM	DESCRIPTION	ASME CODE EXAM	REL REQ	4TH ISI INTERVAL PER1	PER2	PER3	IGSCC CATEGORY	REMARKS
Residual Heat Removal System **Drawing Number: ISI-I-2R-A** **Line Number: 20-DCA-10**										
10R-O-1	R-A	R1.20	TEE TO 45 ELBOW	-	Y	-	-	-	A	IGSCC; (R-A), PRR-10, I2P3

COMPONENT IDENTIFICATION	ASME CODE CAT	ASME CODE ITEM	DESCRIPTION	ASME CODE EXAM	REL REQ	4TH ISI INTERVAL PER1	PER2	PER3	IGSCC CATEGORY	REMARKS
Residual Heat Removal System										
Drawing Number: ISI-P203A										
Line Number: Pump										
10-P203A-HL	C-C	C3.30	PUMP INTEGRAL ATTMT	-	-	-	-	3	-	I2P3, I3P3
H-10-1-P203A	F-A	F1.40	PUMP SUPPORT	-	-	-	-	3	-	I2P3, I3P3

COMPONENT IDENTIFICATION	ASME CODE CAT	ASME CODE ITEM	DESCRIPTION	ASME CODE EXAM	REL REQ	4TH ISI INTERVAL PER1	PER2	PER3	IGSCC CATEGORY	REMARKS
Residual Heat Removal System **Drawing Number: VARIOUS** **Line Number: N/A**										
SLT RHR-1	C-H	C7.10	PRESSURE BOUNDARY	VT-2	-	1	2	3	-	-
SLT RHR-2	C-H	C7.10	PRESSURE BOUNDARY	VT-2	-	1	2	3	-	-
SLT RHR-7	C-H	C7.10	PRESSURE BOUNDARY	VT-2	-	1	2	3	-	-

COMPONENT IDENTIFICATION	ASME CODE CAT	ASME CODE ITEM	DESCRIPTION	ASME CODE EXAM	REL REQ	4TH ISI INTERVAL PER1	PER2	PER3	IGSCC CATEGORY	REMARKS
Residual Heat Removal System										
Drawing Number: N/A										
Line Number: 18-DC-10										
10-VB-1001-29A	B-G-2	B7.70	VALVE BOLTING	-	Y	1	-	-	-	PRR-14, I2P1, I3P1

COMPONENT IDENTIFICATION	ASME CODE CAT	ASME CODE ITEM	DESCRIPTION	IGSCC CAT.	REL REQ	4TH ISI INTERVAL PER1	PER2	PER3	IGSCC PROGRAM EXAM CREDIT	REMARKS
RPV Drawing Number: ISI-I-54-1 Line Number: N/A										
RPV-C-1-344	B-A	B1.11	BELTLINE SHELL WELD	-	Y	-	-	3	-	PRR-6, I3P3
RPV-C-3-339A	B-A	B1.11	UPPER INTER SHELL WELD	-	Y	-	-	3	-	PRR-6, I3P3
RPV-C-3-339B	B-A	B1.11	LOWER INTER SHELL WELD	-	Y	-	-	3	-	PRR-6, I3P3
RPV-C-9-338	B-A	B1.11	SHELL TO BOTTOM HEAD WELD	-	Y	-	-	3	-	PRR-6, I3P3
RPV-L-1-338A	B-A	B1.12	LOWER INTER SHELL VERT WELD	-	Y	-	-	3	-	PRR-6, I3P3
RPV-L-1-338B	B-A	B1.12	LOWER INTER SHELL VERT WELD	-	Y	-	-	3	-	PRR-6, I3P3
RPV-L-1-338C	B-A	B1.12	LOWER INTER SHELL VERT WELD	-	Y	-	-	3	-	PRR-6, I3P3
RPV-L-1-339A	B-A	B1.12	UPPER SHELL VERTICAL WELD	-	Y	-	-	3	-	PRR-6, I3P3
RPV-L-1-339B	B-A	B1.12	UPPER SHELL VERTICAL WELD	-	Y	-	-	3	-	PRR-6, I3P3
RPV-L-1-339C	B-A	B1.12	UPPER SHELL VERTICAL WELD	-	Y	-	-	3	-	PRR-6, I3P3
RPV-L-2-338A	B-A	B1.12	LOWER SHELL VERTICAL WELD	-	Y	-	-	3	-	PRR-6, I3P3
RPV-L-2-338B	B-A	B1.12	LOWER SHELL VERTICAL WELD	-	Y	-	-	3	-	PRR-6, I3P3
RPV-L-2-338C	B-A	B1.12	LOWER SHELL VERTICAL WELD	-	Y	-	-	3	-	PRR-6, I3P3

COMPONENT IDENTIFICATION	ASME CODE CAT	ASME CODE ITEM	DESCRIPTION	IGSCC CAT.	REL REQ	4TH ISI INTERVAL PER1	PER2	PER3	IGSCC PROGRAM EXAM CREDIT	REMARKS
RPV Drawing Number: ISI-I-54-1 Line Number: N/A										
RPV-L-2-339A	B-A	B1.12	UPPER INTER SHELL VERT WELD	-	Y	-	-	3	-	PRR-6, I3P3
RPV-L-2-339B	B-A	B1.12	UPPER INTER SHELL VERT WELD	-	Y	-	-	3	-	PRR-6, I3P3
RPV-L-2-339C	B-A	B1.12	UPPER INTER SHELL VERT WELD	-	Y	-	-	3	-	PRR-6, I3P3
RPV-C-4-339	B-A	B1.30	SHELL TO FLANGE	-	Y	-	-	3	-	PRR-11 & 12, I2P2, I3P3
RPV-N10-NIR	B-D	B3.100	NOZZLE INNER RADIUS	-	-	-	2	-	-	I2P2, I3P2
RPV-N1A-NIR	B-D	B3.100	NOZZLE INNER RADIUS	-	-	1	-	-	-	I2P1, I3P1
RPV-N1B-NIR	B-D	B3.100	NOZZLE INNER RADIUS	-	-	-	-	3	-	I2P3, I3P3
RPV-N2A-NIR	B-D	B3.100	NOZZLE INNER RADIUS	-	-	1	-	-	-	I2P1, I3P1
RPV-N2B-NIR	B-D	B3.100	NOZZLE INNER RADIUS	-	-	1	-	-	-	I2P1, I3P1
RPV-N2C-NIR	B-D	B3.100	NOZZLE INNER RADIUS	-	-	1	-	-	-	I2P1, I3P1
RPV-N2D-NIR	B-D	B3.100	NOZZLE INNER RADIUS	-	-	-	-	3	-	I2P3, I3P3
RPV-N2E-NIR	B-D	B3.100	NOZZLE INNER RADIUS	-	-	-	-	3	-	I2P3, I3P3
RPV-N2F-NIR	B-D	B3.100	NOZZLE INNER RADIUS	-	-	-	-	3	-	I2P3, I3P3

COMPONENT IDENTIFICATION	ASME CODE CAT	ASME CODE ITEM	DESCRIPTION	IGSCC CAT.	REL REQ	4TH ISI INTERVAL PER1	PER2	PER3	IGSCC PROGRAM EXAM CREDIT	REMARKS
RPV Drawing Number: ISI-I-54-1 Line Number: N/A										
RPV-N2G-NIR	B-D	B3.100	NOZZLE INNER RADIUS	-	-	-	-	3	-	I2P3, I3P3
RPV-N2H-NIR	B-D	B3.100	NOZZLE INNER RADIUS	-	-	-	-	3	-	I2P3, I3P3
RPV-N2J-NIR	B-D	B3.100	NOZZLE INNER RADIUS	-	-	-	-	3	-	I2P3, I3P3
RPV-N2K-NIR	B-D	B3.100	NOZZLE INNER RADIUS	-	-	-	-	3	-	I2P3, I3P3
RPV-N3A-NIR	B-D	B3.100	NOZZLE INNER RADIUS	-	-	1	-	-	-	I2P1, I3P1
RPV-N3B-NIR	B-D	B3.100	NOZZLE INNER RADIUS	-	-	1	-	-	-	I2P1, I3P1
RPV-N3C-NIR	B-D	B3.100	NOZZLE INNER RADIUS	-	-	1	-	-	-	I2P2, I3P1
RPV-N3D-NIR	B-D	B3.100	NOZZLE INNER RADIUS	-	-	1	-	-	-	I2P2, I3P1
RPV-N4A-NIR	B-D	B3.100	NOZZLE INNER RADIUS& BORE	-	-	-	-	3	-	I2P1, I3P1
RPV-N4B-NIR	B-D	B3.100	NOZZLE INNER RADIUS& BORE	-	-	-	-	3	-	I2P1, I3P1
RPV-N4C-NIR	B-D	B3.100	NOZZLE INNER RADIUS& BORE	-	-	-	-	3	-	I2P1, I3P1
RPV-N4D-NIR	B-D	B3.100	NOZZLE INNER RADIUS& BORE	-	-	-	-	3	-	I2P1, I3P1
RPV-N6A-NIR	B-D	B3.100	NOZZLE INNER RADIUS	-	-	1	-	-	-	I2P1, I3P1
RPV-N6B-NIR	B-D	B3.100	NOZZLE INNER RADIUS	-	-	-	2	-	-	I2P2, I3P2
RPV-N9A-NIR	B-D	B3.100	NOZZLE INNER RADIUS	-	-	1	-	-	-	I2P1, I3P1
RPV-N9B-NIR	B-D	B3.100	NOZZLE INNER RADIUS	-	-	-	-	3	-	I2P3, I3P3
RPV-N10-NV	B-D	B3.90	NOZZLE TO VESSEL	-	Y	-	2	-	-	PRR-13, I2P2, I3P2
RPV-N1A-NV	B-D	B3.90	NOZZLE TO VESSEL	-	Y	1	-	-	-	PRR-13, I2P1, I3P1
RPV-N1B-NV	B-D	B3.90	NOZZLE TO VESSEL	-	Y	-	-	3	-	PRR-13, I2P3, I3P3

COMPONENT IDENTIFICATION	ASME CODE CAT	ASME CODE ITEM	DESCRIPTION	IGSCC CAT.	REL REQ	4TH ISI INTERVAL PER1	PER2	PER3	IGSCC PROGRAM EXAM CREDIT	REMARKS
RPV Drawing Number: ISI-I-54-1 Line Number: N/A										
RPV-N2A-NV	B-D	B3.90	NOZZLE TO VESSEL	-	Y	1	-	-	-	PRR-13, I2P1, I3P1
RPV-N2B-NV	B-D	B3.90	NOZZLE TO VESSEL	-	Y	1	-	-	-	PRR-13, I2P1, I3P1
RPV-N2C-NV	B-D	B3.90	NOZZLE TO VESSEL	-	Y	1	-	-	-	PRR-13, I2P1, I3P1
RPV-N2D-NV	B-D	B3.90	NOZZLE TO VESSEL	-	Y	-	-	3	-	PRR-13, I2P3, I3P3
RPV-N2E-NV	B-D	B3.90	NOZZLE TO VESSEL	-	Y	-	-	3	-	PRR-13, I2P3, I3P3
RPV-N2F-NV	B-D	B3.90	NOZZLE TO VESSEL	-	Y	-	-	3	-	PRR-13, I2P3, I3P3
RPV-N2G-NV	B-D	B3.90	NOZZLE TO VESSEL	-	Y	-	-	3	-	PRR-13, I2P3, I3P3
RPV-N2H-NV	B-D	B3.90	NOZZLE TO VESSEL	-	Y	-	-	3	-	PRR-13, I2P3, I3P3
RPV-N2J-NV	B-D	B3.90	NOZZLE TO VESSEL	-	Y	-	-	3	-	PRR-13, I2P3, I3P3
RPV-N2K-NV	B-D	B3.90	NOZZLE TO VESSEL	-	Y	-	-	3	-	PRR-13, I2P3, I3P3
RPV-N3A-NV	B-D	B3.90	NOZZLE TO VESSEL	-	Y	1	-	-	-	PRR-13, I2P1, I3P1
RPV-N3B-NV	B-D	B3.90	NOZZLE TO VESSEL	-	Y	1	-	-	-	PRR-13, I2P1, I3P1
RPV-N3C-NV	B-D	B3.90	NOZZLE TO VESSEL	-	Y	1	-	-	-	PRR-13, I2P2, I3P1
RPV-N3D-NV	B-D	B3.90	NOZZLE TO VESSEL	-	Y	1	-	-	-	PRR-13, I2P2, I3P1
RPV-N4A-NV	B-D	B3.90	NOZZLE TO VESSEL	-	-	-	-	3	-	I2P1, I3P3
RPV-N4B-NV	B-D	B3.90	NOZZLE TO VESSEL	-	-	-	-	3	-	I2P3, I3P3
RPV-N4C-NV	B-D	B3.90	NOZZLE TO VESSEL	-	-	-	-	3	-	I2P3, I3P3
RPV-N4D-NV	B-D	B3.90	NOZZLE TO VESSEL	-	-	-	-	3	-	I2P3, I3P3
RPV-N6A-NV	B-D	B3.90	NOZZLE TO VESSEL	-	Y	1	-	-	-	PRR-13, I2P1, I3P1

COMPONENT IDENTIFICATION	ASME CODE CAT	ASME CODE ITEM	DESCRIPTION	IGSCC CAT.	REL REQ	4TH ISI INTERVAL PER1	PER2	PER3	IGSCC PROGRAM EXAM CREDIT	REMARKS
RPV Drawing Number: ISI-I-54-1 Line Number: N/A										
RPV-N6B-NV	B-D	B3.90	NOZZLE TO VESSEL	-	Y	-	2	-	-	PRR-13, I2P2, I3P2
RPV-N9A-NV	B-D	B3.90	NOZZLE TO VESSEL	-	Y	1	-	-	-	PRR-13, I2P1, I3P1
RPV-N9B-NV	B-D	B3.90	NOZZLE TO VESSEL	-	Y	-	-	3	-	PRR-13, I2P3, I3P3
RPV-SBW-0	B-K	B10.10	RPV STABILIZER WELD	-	-	1	-	-	-	I2P1, H-54-1-SB0
RPV-SBW-180	B-K	B10.10	RPV STABILIZER WELD	-	-	1	-	-	-	H-54-1-SB180
RPV-SBW-270	B-K	B10.10	RPV STABILIZER WELD	-	-	1	-	-	-	H-54-1-SB270
RPV-SBW-90	B-K	B10.10	RPV STABILIZER WELD	-	-	1	-	-	-	H-54-1-SB90
H-54-1-SB0	F-A	F1.40	RPV STABILIZER	-	-	1	-	-	-	I3P1, RPV-SBW-0
H-54-1-SB180	F-A	F1.40	RPV STABILIZER	-	-	1	-	-	-	I3P1, RPV-SBW-180
H-54-1-SB270	F-A	F1.40	RPV STABILIZER	-	-	1	-	-	-	I3P1, RPV-SBW-270
H-54-1-SB90	F-A	F1.40	RPV STABILIZER	-	-	1	-	-	-	I3P1, RPV-SBW-90

COMPONENT IDENTIFICATION	ASME CODE CAT	ASME CODE ITEM	DESCRIPTION	IGSCC CAT.	REL REQ	4TH ISI INTERVAL PER1	PER2	PER3	IGSCC PROGRAM EXAM CREDIT	REMARKS
RPV										
Drawing Number: ISI-I-1-1SH1										
Line Number: 20-EB-1										
1-A-1	R-A	R1.20	NOZZLE TO SAFE END	-	Y	-	-	-	-	(B-F) PRR-5, I2P1, I3P1
1-B-1	R-A	R1.20	NOZZLE TO SAFE END	-	Y	-	-	-	-	(B-F) PRR-5, I2P1, I3P1
1-C-1	R-A	R1.20	NOZZLE TO SAFE END	-	Y	-	-	-	-	(B-F) PRR-5, I2P2, I3P1
1-D-1	R-A	R1.20	NOZZLE TO SAFE END	-	Y	1	-	-	-	RI-ISI; (B-F, B5.10); PRR-5; I2P2, I3P1

COMPONENT IDENTIFICATION	ASME CODE CAT	ASME CODE ITEM	DESCRIPTION	IGSCC CAT.	REL REQ	4TH ISI INTERVAL PER1	PER2	PER3	IGSCC PROGRAM EXAM CREDIT	REMARKS
RPV										
Drawing Number: ISI-I-11-1										
Line Number: N/A										
RPV-N14-1	R-A	R1.20	SAFE END TO NOZZLE	-	-	-	-	-	-	(B-F) I2P1

COMPONENT IDENTIFICATION	ASME CODE CAT	ASME CODE ITEM	DESCRIPTION	IGSCC CAT.	REL REQ	4TH ISI INTERVAL PER1	PER2	PER3	IGSCC PROGRAM EXAM CREDIT	REMARKS
RPV										
Drawing Number: ISI-I-12-1SH2										
Line Number: 2-DB-4										
4-N11-1	R-A	R1.20	NOZZLE TO PIPE	-	-	-	-	-	-	EXEMPT, I2P3

COMPONENT IDENTIFICATION	ASME CODE CAT	ASME CODE ITEM	DESCRIPTION	IGSCC CAT.	REL REQ	4TH ISI INTERVAL PER1	PER2	PER3	IGSCC PROGRAM EXAM CREDIT	REMARKS
RPV Drawing Number: ISI-I-14-1 Line Number: DCA/IN										
14-A-1	R-A	R1.14	SAFE END TO NOZZLE	D	Y	-	-	-	-	IGSCC; (B-F); PRR-5; PRR-39; I2P1; I3P1
14-B-1	R-A	R1.14	SAFE END TO NOZZLE	D	Y	-	-	3	-	RI-ISI; IGSCC; (B-F, B5.10); PRR-5; PRR-39; I2P2; I3P2; RFO15

COMPONENT IDENTIFICATION	ASME CODE CAT	ASME CODE ITEM	DESCRIPTION	IGSCC CAT.	REL REQ	4TH ISI INTERVAL PER1	PER2	PER3	IGSCC PROGRAM EXAM CREDIT	REMARKS
RPV Drawing Number: ISI-I-2R-A Line Number: 12-DCA-2										
2R-N2A-1	R-A	R1.20	SAFE END TO NOZZLE	D	Y	1	-	-	Y	RI-ISI; IGSCC; (B-F, B5.10); PRR-5; PRR-15; I2P1, I3P1
2R-N2B-1	R-A	R1.20	SAFE END TO NOZZLE	D	Y	1	-	-	Y	RI-ISI; IGSCC; (B-F, B5.10); PRR-5; PRR-15; I2P1, I3P1
2R-N2C-1	R-A	R1.20	SAFE END TO NOZZLE	D	Y	-	-	-	-	IGSCC; (B-F); PRR-5; PRR-15; I2P2, I3P1
2R-N2D-1	R-A	R1.20	SAFE END TO NOZZLE	D	Y	-	-	-	-	IGSCC; (B-F); PRR-5; PRR-39; I2P2
2R-N2E-1	R-A	R1.20	SAFE END TO NOZZLE	D	Y	-	-	-	-	IGSCC; (B-F); PRR-5; PRR-39; I2P2

COMPONENT IDENTIFICATION	ASME CODE CAT	ASME CODE ITEM	DESCRIPTION	IGSCC CAT.	REL REQ	4TH ISI INTERVAL PER1	PER2	PER3	IGSCC PROGRAM EXAM CREDIT	REMARKS
RPV										
Drawing Number: ISI-I-2R-A										
Line Number: 28-DCA-2										
2R-N1B-1	R-A	R1.20	NOZZLE TO SAFE END	D	Y	-	-	-	-	IGSCC; (B-F); PRR-5; PRR-39; I2P2

COMPONENT IDENTIFICATION	ASME CODE CAT	ASME CODE ITEM	DESCRIPTION	IGSCC CAT.	REL REQ	4TH ISI INTERVAL PER1	PER2	PER3	IGSCC PROGRAM EXAM CREDIT	REMARKS
RPV										
Drawing Number: ISI-I-2R-B										
Line Number 12-DCA-2										
2R-N2F-1	R-A	R1.20	SAFE END TO NOZZLE	D	Y	-	-	-	-	IGSCC; (B-F); PRR-5; PRR-39; I2P2
2R-N2G-1	R-A	R1.20	SAFE END TO NOZZLE	D	Y	-	-	-	-	IGSCC; (B-F); PRR-5; PRR-39; I2P3
2R-N2H-1	R-A	R1.20	SAFE END TO NOZZLE	D	Y	-	-	-	-	IGSCC; (B-F); PRR-5; PRR-15; I2P3
2R-N2J-1	R-A	R1.20	SAFE END TO NOZZLE	D	Y	-	-	-	-	IGSCC; (B-F); PRR-5; PRR-39; I2P2
2R-N2K-1	R-A	R1.20	SAFE END TO NOZZLE	D	Y	-	-	-	-	IGSCC; (B-F); PRR-5; PRR-15; I2P3

COMPONENT IDENTIFICATION	ASME CODE CAT	ASME CODE ITEM	DESCRIPTION	IGSCC CAT.	REL REQ	4TH ISI INTERVAL PER1	PER2	PER3	IGSCC PROGRAM EXAM CREDIT	REMARKS
RPV										
Drawing Number: ISI-I-2R-B										
Line Number 28-DCA-2										
2R-N1A-1	R-A	R1.20	NOZZLE TO SAFE END	A	Y	-	-	-	-	IGSCC; (B-F) PRR-5, I2P1, I3P1

COMPONENT IDENTIFICATION	ASME CODE CAT	ASME CODE ITEM	DESCRIPTION	IGSCC CAT.	REL REQ	4TH ISI INTERVAL PER1	PER2	PER3	IGSCC PROGRAM EXAM CREDIT	REMARKS
RPV Drawing Number: ISI-I-3-1 Line Number: IN/CS										
3-I-1R	R-A	R1.20	NOZZLE TO CAP	E	Y	-	-	-	-	IGSCC; (B-F) PRR-9, I2P2

COMPONENT IDENTIFICATION	ASME CODE CAT	ASME CODE ITEM	DESCRIPTION	IGSCC CAT.	REL REQ	4TH ISI INTERVAL PER1	PER2	PER3	IGSCC PROGRAM EXAM CREDIT	REMARKS
RPV Drawing Number: ISI-I-54-2 Line Number: N/A										
RPV-CW-1-56	B-G-1	B6.50	CLOSURE WASHERS	-	-	1	2	3	-	I2P1, I3P1
RPV-CB-1-56	B-G-1	B6.50	CLOSURE BUSHINGS	-	-	1	2	3	-	I2P1, I3P1
RPV-FT-1-56	B-G-1	B6.40	THREADS IN FLANGE	-	-	1	2	3	-	I2P3, I3P3
RPV-HF	B-A	B1.40	HEAD TO FLANGE	-	-	1	2	3	-	I2P3, I3P3
RPV-TH-M5	B-A	B1.22	MERID HEAD WELD 180	-	Y	-	-	3	-	PPR-6, I3P3
RPV-N7A-NV	B-D	B3.90	NOZZLE TO VESSEL	-	Y	-	-	3	-	PRR-13, I2P3, I3P3
RPV-N7A-NIR	B-D	B3.90	NOZZLE INNER RADIUS	-	Y	-	-	3	-	PRR-13, I2P3, I3P3
RPV-TH-M8	B-A	B1.22	MERID HEAD WELD 315	-	Y	-	-	3	-	PRR-6, I3P3
RPV-HB-44	B-G-1	B6.30	CLOSURE STUDS	-	-	-	-	3	-	I2P3, I3P3
RPV-TH-M6	B-A	B1.22	MERID HEAD WELD 225	-	Y	-	-	3	-	PRR-6, I3P3
RPV-TH-M4	B-A	B1.22	MERID HEAD WELD 135	-	Y	-	-	3	-	PRR-6, I3P3
RPV-TH-M3	B-A	B1.22	MERID HEAD WELD 90	-	Y	1	-	-	-	PRR-6 I2P1, I3P1

COMPONENT IDENTIFICATION	ASME CODE CAT	ASME CODE ITEM	DESCRIPTION	IGSCC CAT.	REL REQ	4TH ISI INTERVAL PER1	PER2	PER3	IGSCC PROGRAM EXAM CREDIT	REMARKS
RPV **Drawing Number: ISI-I-54-2** **Line Number: N/A**										
RPV-TH-M2	B-A	B1.22	MERID HEAD WELD 45	-	Y	1	-	-	-	PRR-6, I2P1, I3P1
RPV-TH-M1	B-A	B1.22	MERID HEAD WELD 0	-	Y	1	-	-	-	PRR-6, I2P1, I3P1
RPV-TH-C	B-A	B1.21	HEAD CIRCUMF WELD	-	Y	-	-	3	-	PRR-6, I2P3, I3P3
RPV-TH-M7	B-A	B1.22	MERID HEAD WELD 270	-	Y	-	-	3	-	PRR-6, I3P3
RPV-N7B-NIR	B-D	B3.100	NOZZLE INNER RADIUS	-	-	-	-	3	-	I2P3, I3P3
RPV-HB-43	B-G-1	B6.30	CLOSURE STUDS	-	-	-	-	3	-	I2P3, I3P3
RPV-N8-NIR	B-D	B3.100	NOZZLE INNER RADIUS	-	-	-	-	3	-	I2P3, I3P3
RPV-N8-NV	B-D	B3.90	NOZZLE TO VESSEL	-	Y	-	-	3	-	PRR-13, I2P3, I3P3
RPV-N7A-NIR	B-D	B3.100	NOZZLE INNER RADIUS	-	-	-	-	3	-	I2P3, I3P3
RPV-N7B-NV	B-D	B3.90	NOZZLE TO VESSEL	-	Y	-	-	3	-	PRR-13, I2P3, I3P3
RPV-CHN-1-56	B-G-1	B6.10	CLOSURE HEAD NUTS	-	-	1	2	3	-	I2P1, I3P1
RPV-CS-1-56	B-G-1	B6.20	CLOSURE STUDS	-	-	1	2	3	-	I2P1, I3P1
RPV-HB-41	B-G-1	B6.30	CLOSURE STUDS	-	-	-	-	3	-	I2P3, I3P3
RPV-HB-42	B-G-1	B6.30	CLOSURE STUDS	-	-	-	-	3	-	I2P3, I3P3

COMPONENT IDENTIFICATION	ASME CODE CAT	ASME CODE ITEM	DESCRIPTION	IGSCC CAT.	REL REQ	4TH ISI INTERVAL PER1	PER2	PER3	IGSCC PROGRAM EXAM CREDIT	REMARKS
RPV Drawing Number: ISI-I-54-3 Line Number: N/A										
RPV-BH-C1	B-A	B1.21	HEAD CIRCUMF WELD	-	Y	-	-	3	-	PRR-6, I2P3, I3P3
RPV-BH-M6	B-A	B1.22	MERID HEAD WELD 265	-	Y	-	-	3	-	PRR-6, I3P3
RPV-BH-M5	B-A	B1.22	MERID HEAD WELD 220	-	Y	-	-	3	-	PRR-6, I3P3
RPV-BH-M4	B-A	B1.22	MERID HEAD WELD 175	-	Y	-	-	3	-	PRR-6, I3P3
RPV-BH-M2	B-A	B1.22	MERID HEAD WELD 85	-	Y	-	-	3	-	PRR-6, I3P3
RPV-BH-M13	B-A	B1.22	MERID HEAD WELD 245	-	Y	-	-	3	-	PRR-6, I3P3
RPV-BH-M12	B-A	B1.22	MERID HEAD WELD 185	-	Y	-	-	3	-	PRR-6, I3P3
RPV-BH-M11	B-A	B1.22	MERID HEAD WELD 125	-	Y	-	-	3	-	PRR-6, I3P3
RPV-BH-M10	B-A	B1.22	MERID HEAD WELD 65	-	Y	-	-	3	-	PRR-6, I3P3
RPV-SW	B-K	B10.10	SKIRT WELD	-	-	-	2	-	-	I2P1
RPV-BH-C2	B-A	B1.21	HEAD CIRCUMF WELD	-	Y	-	-	3	-	PRR-6, I3P3
RPV-BH-M7	B-A	B1.22	MERID HEAD WELD 310	-	Y	-	-	3	-	PRR-6, I3P3
RPV-BH-M3	B-A	B1.22	MERID HEAD WELD 130	-	Y	-	-	3	-	PRR-6, I3P3
RPV-BH-M1	B-A	B1.22	MERID HEAD WELD 40	-	Y	-	-	3	-	PRR-6, I2P3, I3P3
RPV-BH-M9	B-A	B1.22	MERID HEAD WELD 5	-	Y	-	-	3	-	PRR-6, I3P3
RPV-BH-M14	B-A	B1.22	MERID HEAD WELD 305	-	Y	-	-	3	-	PRR-6, I3P3
RPV-BH-M8	B-A	B1.22	MERID HEAD WELD 355	-	Y	-	-	3	-	PRR-6, I3P3

COMPONENT IDENTIFICATION	ASME CODE CAT	ASME CODE ITEM	DESCRIPTION	IGSCC CAT.	REL REQ	4TH ISI INTERVAL PER1	PER2	PER3	IGSCC PROGRAM EXAM CREDIT	REMARKS
RPV Drawing Number: ISI-I-54-4 Line Number: N/A										
RPV-N9B-1	R-A	R1.20	NOZZLE TO SAFE END	D	Y	-	-	-	-	IGSCC; (B-F) PRR-5 & 10, I2P1, I3P1
RPV-FB-N8	B-G-2	B7.10	FLANGE BOLTING	-	Y	1	-	-	-	PRR-14, I2P1, I3P1
RPV-N16A-R-1	R-A	R1.20	NOZZLE TO SAFE END	-	Y	-	-	-	-	(B-F) PRR-5 & 10, I2P1, I3P1
RPV-N16A-2	N/A	N/A	PIPE TO REDUCER	-	-	-	-	-	-	-
RPV-N16A-1	N/A	N/A	NOZZLE TO SAFE END	-	-	-	-	-	-	-
RPV-FB-N7B	B-G-2	B7.10	FLANGE BOLTING	-	Y	1	-	-	-	PRR-14, I2P1, I3P1
RPV-N16B-R-1	R-A	R1.20	NOZZLE TO SAFE END	-	-	-	-	-	-	(B-F) I2P3
RPV-N16A-R-2	R-A	R1.20	SAFE END TO REDUCER	-	-	-	-	-	-	(B-F) I2P3
RPV-N16B-1	N/A	N/A	NOZZLE TO SAFE END	-	-	-	-	-	-	-
RPV-N9A-1	R-A	R1.20	NOZZLE TO SAFE END	E	Y	-	-	-	-	IGSCC; (B-F) PRR-5 & 10, I2P1, I3P1
RPV-N8-1	R-A	R1.20	NOZZLE TO FLANGE	-	Y	-	-	-	-	(B-F) PRR-5 & 10, I2P3
RPV-N16B-2	N/A	N/A	PIPE TO PIPE	-	-	-	-	-	-	-
RPV-N7B-1	R-A	R1.20	NOZZLE TO FLANGE	-	Y	-	-	-	-	(B-F) PRR-5 & 10, I2P3
RPV-N7A-1	R-A	R1.20	NOZZLE TO FLANGE	-	Y	-	-	-	-	(B-F) PRR-5 &10, I3P3
RPV-FB-N7A	B-G-2	B7.10	FLANGE BOLTING	-	Y	1	-	-	-	PRR-14, I2P1, I3P1
RPV-N16B-3	N/A	N/A	PIPE TO REDUCER	-	-	-	-	-	-	-
RPV-N16B-R-2	R-A	R1.20	SAFE END TO REDUCER	-	Y	-	-	3	-	RI-ISI; (B-F, B5.14); PRR-5 & 10; I2P3, I3P3

COMPONENT IDENTIFICATION	ASME CODE CAT	ASME CODE ITEM	DESCRIPTION	IGSCC CAT.	REL REQ	4TH ISI INTERVAL PER1	PER2	PER3	IGSCC PROGRAM EXAM CREDIT	REMARKS
RPV Drawing Number: ISI-I-6-1 Line Number: 12-DL-6										
6-N4A-1	R-A	R1.11	SAFE END TO NOZZLE	-	-	1	-	-	-	RI-ISI; (B-F, B5.10); I2P1, I3P1
6-N4B-1	R-A	R1.11	SAFE END TO NOZZLE	-	-	1	-	-	-	RI-ISI; (B-F, B5.10); I2P1, I3P1
6-N4C-1	R-A	R1.11	SAFE END TO NOZZLE	-	-	1	-	-	-	RI-ISI; (B-F, B5.10); I2P1, I3P1
6-N4D-1	R-A	R1.11	SAFE END TO NOZZLE	-	-	1	-	-	-	RI-ISI; (B-F, B5.10); I2P1, I3P1

COMPONENT IDENTIFICATION	ASME CODE CAT	ASME CODE ITEM	DESCRIPTION	IGSCC CAT.	REL REQ	4TH ISI INTERVAL PER1	PER2	PER3	IGSCC PROGRAM EXAM CREDIT	REMARKS
RPV Drawing Number: N/A Line Number: N/A										
H-54-1-1	F-A	F1.40	RPV SUPPORT	-	-	-	-	3	-	I2P3, I3P3
CRD NOZZLES	B-E	B4.12	145 CRD NOZZLES	-	-	1	-	-	-	I2P1, I3P1
RPV-CRD-HSG-4	B-O	B14.10	CRD HOUSING WELD	-	Y	-	-	3	-	PRR-24, I2P3, I3P3
RPV-CRD-HSG-3	B-O	B14.10	CRD HOUSING WELD	-	Y	-	-	3	-	PRR-24, I2P3, I3P3
RPV-CRD-HSG-2	B-O	B14.10	CRD HOUSING WELD	-	Y	-	-	3	-	PRR-24, I2P3, I3P3
RPV-CRD-HSG-1	B-O	B14.10	CRD HOUSING WELD	-	Y	-	-	3	-	PRR-24, I2P3, I3P3
RPV CSS	B-N-2	B13.40	CORE SUPPORT STRUCT	-	-	-	-	3	-	I2P3, I3P3
RPV INT ATTACH	B-N-2	B13.30	RPV INT ATTACH BELTLINE REG	-	-	-	-	3	-	I2P3, I3P3
RPV INTERIOR	B-N-1	B13.10	VESSEL INTERIOR	-	-	1	-	-	-	I2P1, I3P1
INST NOZZLES	B-E	B4.13	42 INST NOZZLES	-	-	1	-	-	-	I2P1, I3P1
RPV-N15B-1	R-A	R1.20	NOZZLE TO SAFE END	-	-	-	-	-	-	(B-F)
RPV-N15A-1	R-A	R1.20	NOZZLE TO SAFE END	-	-	-	-	-	-	(B-F)
RPV-FB-CRD	B-G-2	B7.80	CRD BOLTING	-	-	1	2	3	-	I2P1, I3P1, I3P2, I3P3
RPV INT ATTACH	B-N-2	B13.20	RPV INT ATTACH BELTLINE REG	-	-	-	-	3	-	I2P3, I3P3

COMPONENT IDENTIFICATION	ASME CODE CAT	ASME CODE ITEM	DESCRIPTION	IGSCC CAT.	REL REQ	4TH ISI INTERVAL PER1	PER2	PER3	FAC PROGRAM EXAM CREDIT	IGSCC PROGRAM EXAM CREDIT	REMARKS
RWCU Drawing Number: ISI-I-12-2 Line Number: 4-DA-12											
12-I-23A	N/A	N/A	PIPE TO PIPE	-	-	-	-	-	-	-	-
12-I-26	R-A	R1.20	ELBOW TO PIPE	D	Y	-	-	-	-	-	IGSCC; (B-J, B9.11) PRR-10
12-I-27	R-A	R1.20	PIPE TO ELBOW	D	Y	-	-	-	-	-	IGSCC; (B-J, B9.11) PRR-10
12-I-26HL1(4)	B-K	B10.20	SUPPORT LUGS	-	-	-	-	-	-	-	H-12-1-4SG
12-I-28HL1(4)	B-K	B10.20	SUPPORT LUGS	-	-	-	-	-	-	-	H-12-1-3SG
H-12-1-111	F-A	F1.10-B	GUIDE	-	-	-	-	-	-	-	I2P2
H-12-1-112	F-A	F1.10-B	GUIDE	-	-	-	-	-	-	-	I2P2
H-12-1-113	F-A	F1.10-B	GUIDE	-	-	-	-	-	-	-	I2P2, I3P2
H-12-1-1243	F-A	F1.10-B	RESTRAINT	-	-	-	-	-	-	-	I2P2
H-12-1-1258	F-A	F1.10-B	RESTRAINT	-	-	-	-	-	-	-	I2P2
H-12-1-2SR	F-A	F1.10-B	GUIDE	-	-	-	-	-	-	-	I2P1
H-12-1-4SG	F-A	F1.10-B	RIGID RESTRAINT	-	-	-	2	-	-	-	I2P1, I3P2, 12-I-26HL1(4)
12-1-5PS	B-K	B10.20	SUPPORT LUGS	-	-	-	-	-	-	-	H-12-1-5
12-VB-1201-80	B-G-2	B7.70	VALVE BOLTING	-	Y	-	-	3	-	-	PRR-14, I2P3, I3P3
H-12-1-4	F-A	F1.10-C	SPRING HANGER	-	-	-	-	-	-	-	I2P1
H-12-1-5	F-A	F1.10-B	GUIDE	-	-	-	-	3	-	-	I2P1, I3P3, 12-1-5PS
H-12-1-6	F-A	F1.10-B	RESTRAINT	-	-	-	-	-	-	-	-
H-12-1-7	F-A	F1.10-C	SPRING HANGER	-	-	-	-	-	-	-	I2P1
H-12-1-8	F-A	F1.10-C	SPRING HANGER	-	-	1	-	-	-	-	I2P1, I3P2

COMPONENT IDENTIFICATION	ASME CODE CAT	ASME CODE ITEM	DESCRIPTION	IGSCC CAT.	REL REQ	4TH ISI INTERVAL PER1	PER2	PER3	FAC PROGRAM EXAM CREDIT	IGSCC PROGRAM EXAM CREDIT	REMARKS
RWCU											
Drawing Number: ISI-I-12-2											
Line Number: 4-DA-12											
H-12-1-3SG	F-A	F1.10-B	GUIDE	-	-	-	-	-	-	-	I2P2, 12-I-28HL1(4)
Line Number: 4-DA/DM-12											
12-I-25AR	R-A	R1.20	PIPE TO PIPE	A	Y	-	-	-	-	-	IGSCC; (B-J, B9.11) PRR-10
Line Number: 4-DM-12											
12-I-17R	R-A	R1.20	PIPE TO REDUCER	A	Y	-	-	-	-	-	IGSCC; (B-J, B9.11) PRR-10, I2P3
12-I-18R	R-A	R1.20	ELBOW TO PIPE	A	Y	-	-	-	-	-	IGSCC; (B-J, B9.11) PRR-10
12-I-19R	R-A	R1.20	PIPE TO ELBOW	A	Y	-	-	-	-	-	IGSCC; (B-J, B9.11) PRR-10, I2P2
12-I-20R	R-A	R1.20	ELBOW TO PIPE	A	Y	-	-	-	-	-	IGSCC; (B-J, B9.11) PRR-10
12-I-21R	R-A	R1.20	PIPE TO ELBOW	A	Y	-	-	-	-	-	IGSCC; (B-J, B9.11) PRR-10
12-I-22R	R-A	R1.20	ELBOW TO PIPE	A	Y	-	-	-	-	-	IGSCC; (B-J, B9.11) PRR-10
12-I-23R	R-A	R1.20	PIPE TO ELBOW	A	Y	-	-	-	-	-	IGSCC; (B-J, B9.11) PRR-10
12-I-24R	R-A	R1.20	ELBOW TO PIPE	A	Y	-	-	-	-	-	IGSCC; (B-J, B9.11) PRR-10
12-I-25R	R-A	R1.20	PIPE TO ELBOW	A	Y	-	-	-	-	-	IGSCC; (B-J, B9.11) PRR-10
12-I-28R	R-A	R1.20	ELBOW TO PIPE	A	Y	-	-	-	-	-	IGSCC; (B-J, B9.11) PRR-10
12-I-29R	R-A	R1.20	PIPE TO ELBOW	A	Y	-	-	-	-	-	IGSCC; (B-J, B9.11) PRR-10
12-I-30R	R-A	R1.20	ELBOW TO PIPE	A	Y	-	-	-	-	-	IGSCC; (B-J, B9.11) PRR-10, I2P1
12-I-31R	R-A	R1.20	PIPE TO ELBOW	A	Y	-	-	-	-	-	IGSCC; (B-J, B9.11) PRR-10, I2P1
12-I-32R	R-A	R1.20	ELBOW TO PIPE	A	Y	-	-	-	-	-	IGSCC; (B-J, B9.11) PRR-10

COMPONENT IDENTIFICATION	ASME CODE CAT	ASME CODE ITEM	DESCRIPTION	IGSCC CAT.	REL REQ	4TH ISI INTERVAL PER1	PER2	PER3	FAC PROGRAM EXAM CREDIT	IGSCC PROGRAM EXAM CREDIT	REMARKS
RWCU											
Drawing Number: ISI-I-12-2											
Line Number: 4-DM-12											
12-I-33R	R-A	R1.20	PIPE TO ELBOW	A	Y	-	-	-	-	-	IGSCC; (B-J, B9.11) PRR-10
12-I-34R	R-A	R1.20	ELBOW TO PIPE	A	Y	-	-	-	-	-	IGSCC; (B-J, B9.11) PRR-10, I2P1
12-I-35R	R-A	R1.20	PIPE TO ELBOW	A	Y	-	-	-	-	-	IGSCC; (B-J, B9.11) PRR-10, I2P1
12R-I-36R	R-A	R1.20	VALVE TO PIPE	A	Y	-	-	-	-	-	IGSCC; (B-J, B9.11) PRR-10, I2P1
Line Number: 4-DM/DA-12											
12-I-27A	R-A	R1.20	PIPE TO PIPE	A	Y	-	-	-	-	-	IGSCC; (B-J, B9.11) PRR-10
Line Number: 4-EA-12											
H-12-1-2	F-A	F1.10-C	SPRING SUPPORT	-	-	-	-	-	-	-	I2P1
Line Number: 6-DA/DL-6											
12-I-16R	R-A	R1.20	REDUCER TO PIPE	A	Y	-	-	-	-	-	IGSCC; (B-F, B5.130) PRR-5 & 10, I2P1
Line Number: 6-DL-12											
H-6-1-99	F-A	F1.10-C	SPRING HANGER	-	-	-	-	-	-	-	I2P1
H-12-1-100	F-A	F1.10-A	RIGID HANGER	-	-	-	-	3	-	-	I2P3, I3P3

COMPONENT IDENTIFICATION	ASME CODE CAT	ASME CODE ITEM	DESCRIPTION	IGSCC CAT.	REL REQ	4TH ISI INTERVAL PER1	PER2	PER3	FAC PROGRAM EXAM CREDIT	IGSCC PROGRAM EXAM CREDIT	REMARKS
RWCU Drawing Number: ISI-I-12-2 Line Number: 6-DL-6											
12-I-1	R-A	R1.20	PIPE TO PIPE	-	Y	-	-	-	-	-	(B-J, B9.11) PRR-10
12-I-2	R-A	R1.20	PIPE TO PIPE	-	Y	-	-	-	-	-	(B-J, B9.11) PRR-10
12-I-11	R-A	R1.20	PIPE TO PIPE	-	Y	-	-	-	-	-	(B-J, B9.11) PRR-10, I2P3
12-I-12	R-A	R1.20	VALVE TO PIPE	-	Y	-	-	-	-	-	(B-J, B9.11) PRR-10, I2P3
12-I-13	R-A	R1.20	PIPE TO VALVE	-	Y	-	-	-	-	-	(B-J, B9.11) PRR-10
12-I-14	R-A	R1.20	VALVE TO PIPE	-	Y	-	-	-	-	-	(B-J, B9.11) PRR-10
12-I-15	R-A	R1.20	PIPE TO VALVE	-	Y	-	-	-	-	-	(B-J, B9.11) PRR-10
12-VB-1201-82	B-G-2	B7.70	VALVE BOLTING	-	Y	-	2	-	-	-	PRR-14, I2P3, I3P2
12-VB-1201-81	B-G-2	B7.70	VALVE BOLTING	-	Y	-	2	-	-	-	PRR-14, I2P1, I3P2
H-12-1-5SA	F-A	F1.10-B	ANCHOR	-	-	-	2	-	-	-	I2P2, I3P2, 12-1-5SAHL
12-1-5SAHL	**B-K**	**B10.20**	**SUPPORT LUGS**	-	-	-	-	-	-	-	H-12-1-5SA
12-VI-1201-82	B-M-2	B12.50	VALVE INTERNALS	-	-	-	-	-	-	-	-
12-VI-1201-81	B-M-2	B12.50	VALVE INTERNALS	-	-	-	-	-	-	-	-
12-I-4	R-A	R1.20	TEE TO PIPE	-	Y	1	-	-	Y	-	RI-ISI; (B-J, B9.11); PRR-10
12-I-5	R-A	R1.20	PIPE TO TEE	-	Y	1	-	-	Y	-	RI-ISI; (B-J, B9.11); PRR-10
12-I-6	R-A	R1.20	ELBOW TO PIPE	-	Y	-	-	-	-	-	(B-J, B9.11) PRR-10
12-I-7	R-A	R1.20	PIPE TO ELBOW	-	Y	-	-	-	-	-	(B-J, B9.11) PRR-10
12-I-8	R-A	R1.20	PIPE TO PIPE	-	Y	-	-	-	-	-	(B-J, B9.11) PRR-10

COMPONENT IDENTIFICATION	ASME CODE CAT	ASME CODE ITEM	DESCRIPTION	IGSCC CAT.	REL REQ	4TH ISI INTERVAL PER1	PER2	PER3	FAC PROGRAM EXAM CREDIT	IGSCC PROGRAM EXAM CREDIT	REMARKS
RWCU Drawing Number: ISI-I-12-2 Line Number: 6-DL-6											
12-I-9	R-A	R1.20	ELBOW TO PIPE	-	Y	-	-	-	-	-	(B-J, B9.11) PRR-10
12-I-10	R-A	R1.20	PIPE TO ELBOW	-	Y	-	-	-	-	-	(B-J, B9.11) PRR-10
12-I-3	R-A	R1.20	PIPE TO PIPE	-	Y	-	-	-	-	-	(B-J, B9.11) PRR-10

COMPONENT IDENTIFICATION	ASME CODE CAT	ASME CODE ITEM	DESCRIPTION	IGSCC CAT.	REL REQ	4TH ISI INTERVAL PER1	PER2	PER3	FAC PROGRAM EXAM CREDIT	IGSCC PROGRAM EXAM CREDIT	REMARKS
RWCU Drawing Number: ISI-I-12-1SH2 Line Number: 2-DB-4											
4-N11-17	R-A	R1.20	PIPE TO TEE	-	Y	-	-	-	-	-	(B-J, B9.40) PRR-10
12-BC-20	R-A	R1.20	PIPE TO VALVE	-	Y	-	-	-	-	-	(B-J, B9.40) PRR-10
12-BC-19	R-A	R1.20	ELBOW TO PIPE	-	Y	-	-	-	-	-	(B-J, B9.40) PRR-10
12-BC-18	R-A	R1.20	PIPE TO ELBOW	-	Y	-	-	-	-	-	(B-J, B9.40) PRR-10
4-N11-10	R-A	R1.20	PIPE TO ELBOW	-	Y	-	-	-	-	-	(B-J, B9.40) PRR-10
4-N11-11	R-A	R1.20	ELBOW TO PIPE	-	Y	-	-	-	-	-	(B-J, B9.40) PRR-10
4-N11-12	R-A	R1.20	PIPE TO TEE	-	Y	-	-	-	-	-	(B-J, B9.40) PRR-10
4-N11-13	R-A	R1.20	TEE TO ENDCAP	-	Y	-	-	-	-	-	(B-J, B9.40) PRR-10
4-N11-14	R-A	R1.20	TEE TO PIPE	-	Y	-	-	-	-	-	(B-J, B9.40) PRR-10
4-N11-16	R-A	R1.20	BEND TO PIPE	-	Y	-	-	-	-	-	(B-J, B9.40) PRR-10
4-N11-2	R-A	R1.20	PIPE TO ELBOW	-	-	-	-	-	-	-	(B-J, B9.40) EXEMPT
4-N11-3	R-A	R1.20	ELBOW TO PIPE	-	-	-	-	-	-	-	(B-J, B9.40) EXEMPT
4-N11-4	R-A	R1.20	PIPE TO ELBOW	-	-	-	-	-	-	-	(B-J, B9.40) EXEMPT
12-BC-15R	R-A	R1.20	PIPE TO VALVE	-	Y	-	-	-	-	-	(B-J, B9.40) PRR-10
12-VB-1201-39	B-G-2	B7.70	VALVE BOLTING	-	Y	-	-	3	-	-	PRR-14, I2P3, I3P3
H-4-1-6	F-A	F1.10-B	GUIDE	-	-	-	-	-	-	-	-
4-N11-15	R-A	R1.20	PIPE TO BEND	-	Y	-	-	-	-	-	(B-J, B9.40) PRR-10
12-VB-1201-65	B-G-2	B7.70	VALVE BOLTING	-	Y	-	-	3	-	-	PRR-14, I2P3, I3P3

COMPONENT IDENTIFICATION	ASME CODE CAT	ASME CODE ITEM	DESCRIPTION	IGSCC CAT.	REL REQ	4TH ISI INTERVAL PER1	PER2	PER3	FAC PROGRAM EXAM CREDIT	IGSCC PROGRAM EXAM CREDIT	REMARKS
RWCU											
Drawing Number: ISI-I-12-1SH2											
Line Number: 2-DB-4											
4-N11-5	R-A	R1.20	ELBOW TO PIPE	-	-	-	-	-	-	-	(B-J, B9.40) EXEMPT
12-BC-16	R-A	R1.20	TEE TO PIPE	-	Y	-	-	-	-	-	(B-J, B9.40) PRR-10
12-BC-17	R-A	R1.20	TEE TO PIPE	-	Y	-	-	-	-	-	(B-J, B9.40) PRR-10
4-N11-6	R-A	R1.20	PIPE TO ELBOW	-	-	-	-	-	-	-	(B-J, B9.40) EXEMPT
4-N11-7	R-A	R1.20	ELBOW TO PIPE	-	-	-	-	-	-	-	(B-J, B9.40) EXEMPT
4-N11-8	R-A	R1.20	PIPE TO ELBOW	-	Y	-	-	-	-	-	(B-J, B9.40) PRR-10
4-N11-9	R-A	R1.20	ELBOW TO PIPE	-	Y	-	-	-	-	-	(B-J, B9.40) PRR-10
H-4-1-1	F-A	F1.10-B	GUIDE	-	-	-	-	-	-	-	I2P2, I3P2
Line Number: 2-DB/DCA-12											
12R-BC-14R	R-A	B5.150	VALVE TO PIPE	-	Y	-	-	-	-	-	(B-F, B5.150) PRR-5 & 10, I2P3
Line Number: 2-DB/EB-4											
12-BC-21	R-A	R1.20	VALVE TO PIPE	-	Y	-	-	-	-	-	(B-J, B9.40) PRR-10

COMPONENT IDENTIFICATION	ASME CODE CAT	ASME CODE ITEM	DESCRIPTION	IGSCC CAT.	REL REQ	4TH ISI INTERVAL PER1	PER2	PER3	FAC PROGRAM EXAM CREDIT	IGSCC PROGRAM EXAM CREDIT	REMARKS
RWCU Drawing Number: ISI-I-12-1SH2 Line Number: 2-DCA-12											
12R-BC-6	R-A	R1.20	PIPE TO ELBOW	-	Y	-	-	-	-	-	(B-J, B9.40) PRR-10, I2P1, I3P1
12R-BC-7	R-A	R1.20	ELBOW TO ELBOW	-	Y	-	-	-	-	-	(B-J, B9.40) PRR-10
12R-BC-8	R-A	R1.20	ELBOW TO ELBOW	-	Y	-	-	-	-	-	(B-J, B9.40) PRR-10
12R-BC-9	R-A	R1.20	ELBOW TO ELBOW	-	Y	-	-	-	-	-	(B-J, B9.40) PRR-10
12R-BC-10	R-A	R1.20	PIPE TO PIPE	-	Y	-	-	-	-	-	(B-J, B9.40) PRR-10, I2P2
12R-BC-11	R-A	R1.20	PIPE TO PIPE	-	Y	-	-	-	-	-	(B-J, B9.40) PRR-10, I2P2
12R-BC-12	R-A	R1.20	ELBOW TO PIPE	-	Y	-	-	-	-	-	(B-J, B9.40) PRR-10
12R-BC-13R	R-A	R1.20	PIPE TO ELBOW	-	Y	-	-	-	-	-	(B-J, B9.40) PRR-10
H-12-1-96	F-A	F1.10-B	GUIDE	-	-	-	-	3	-	-	I2P1, I3P3
H-12-1-95	F-A	F1.10-B	GUIDE	-	-	-	-	-	-	-	I2P1
H-12-1-94	F-A	F1.10-B	GUIDE	-	-	-	-	-	-	-	I2P1
H-12-1-1463	F-A	F1.10-B	GUIDE	-	-	-	-	-	-	-	I2P1
12R-BC-1A	R-A	R1.20	TEE TO PIPE	-	Y	-	-	-	-	-	(B-J, B9.40) PRR-10
12R-BC-1B	R-A	R1.20	PIPE TO TEE	-	Y	-	-	-	-	-	(B-J, B9.40) PRR-10
12R-BC-1C	R-A	R1.20	PIPE TO COUPLING	-	Y	-	-	-	-	-	(B-J, B9.40) PRR-10
12R-BC-1D	R-A	R1.20	COUPLING TO PIPE	-	Y	-	-	-	-	-	(B-J, B9.40) PRR-10
12R-BC-1E	R-A	R1.20	PIPE TO ELBOW	-	Y	-	-	-	-	-	(B-J, B9.40) PRR-10
12R-BC-1F	R-A	R1.20	ELBOW TO PIPE	-	Y	-	-	-	-	-	(B-J, B9.40) PRR-10
12R-BC-1G	R-A	R1.20	PIPE TO BR CONN.	-	Y	-	-	-	-	-	(B-J, B9.40) PRR-10, I2P3

COMPONENT IDENTIFICATION	ASME CODE CAT	ASME CODE ITEM	DESCRIPTION	IGSCC CAT.	REL REQ	4TH ISI INTERVAL PER1	PER2	PER3	FAC PROGRAM EXAM CREDIT	IGSCC PROGRAM EXAM CREDIT	REMARKS
RWCU											
Drawing Number: ISI-I-12-1SH2											
Line Number: 2-DCA-12											
12R-BC-2	N/A	N/A	ELBOW TO PIPE	-	Y	-	-	-	-	-	-
RWCU											
Drawing Number: ISI-I-12-1SH2											
Line Number: 2-EB/MD-4											
12-BC-22	R-A	R1.20	PIPE TO VALVE	-	Y	-	-	-	-	-	(B-J, B9.40) PRR-10
Line Number: N/A											
H-20-1-7	F-ACL4	F1.20-B	GUIDE	-	-	-	2	-	-	-	I2P2, I3P2

COMPONENT IDENTIFICATION	ASME CODE CAT	ASME CODE ITEM	DESCRIPTION	IGSCC CAT.	REL REQ	4TH ISI INTERVAL PER1	PER2	PER3	FAC PROGRAM EXAM CREDIT	IGSCC PROGRAM EXAM CREDIT	REMARKS
RWCU Drawing Number: ISI-I-12-1SH1 Line Number: 6-DCA-12											
12R-O-3	R-A	R1.20	PIPE TO 45 ELBOW	A	Y	-	-	-	-	-	IGSCC; (B-J, B9.11) PRR-10
12R-O-5	R-A	R1.20	PIPE TO VALVE	A	Y	-	-	-	-	-	IGSCC; (B-J, B9.11) PRR-10
12R-O-6	R-A	R1.20	VALVE TO ELBOW	A	Y	-	-	-	-	-	IGSCC; (B-J, B9.11) PRR-10
12R-O-7	R-A	R1.20	ELBOW TO PIPE	A	Y	-	2	-	-	-	RI-ISI; IGSCC; (B-J, B9.11); PRR-10; I2P2
12R-O-8	R-A	R1.20	PIPE TO ELBOW	A	Y	-	-	-	-	-	IGSCC; (B-J, B9.11) PRR-10
12R-O-9	R-A	R1.20	ELBOW TO PIPE	A	Y	-	-	-	-	-	IGSCC; (B-J, B9.11) PRR-10
12R-O-10LU	N/A	N/A	LONG SEAM	-	Y	-	-	-	-	-	(B-J, B9.12) PRR-10
12R-O-11LD	N/A	N/A	LONG SEAM	-	Y	-	-	-	-	-	(B-J, B9.12) PRR-10
12R-O-12ALD	N/A	N/A	LONG SEAM	-	Y	-	-	-	-	-	(B-J, B9.12) PRR-10
12R-O-12BLD	N/A	N/A	LONG SEAM	-	Y	-	-	-	-	-	(B-J, B9.12) PRR-10
12R-O-12LU	N/A	N/A	LONG SEAM	-	Y	-	-	-	-	-	(B-J, B9.12) PRR-10
12R-O-13ALU	N/A	N/A	LONG SEAM	-	Y	-	-	-	-	-	(B-J, B9.12) PRR-10
12R-O-13BLU	N/A	N/A	LONG SEAM	-	Y	-	-	-	-	-	(B-J, B9.12) PRR-10
12R-O-18LU	N/A	N/A	LONG SEAM	-	Y	-	-	-	-	-	(B-J, B9.12) PRR-10
12R-O-14ALD	N/A	N/A	LONG SEAM	-	Y	-	-	-	-	-	(B-J, B9.12) PRR-10

COMPONENT IDENTIFICATION	ASME CODE CAT	ASME CODE ITEM	DESCRIPTION	IGSCC CAT.	REL REQ	4TH ISI INTERVAL PER1	PER2	PER3	FAC PROGRAM EXAM CREDIT	IGSCC PROGRAM EXAM CREDIT	REMARKS
RWCU Drawing Number: ISI-I-12-1SH1 Line Number: 6-DCA-12											
12R-O-14BLD	N/A	N/A	LONG SEAM	-	Y	-	-	-	-	-	(B-J, B9.12) PRR-10
12R-O-14LU	N/A	N/A	LONG SEAM	-	Y	-	-	-	-	-	(B-J, B9.12) PRR-10
12R-O-15ALU	N/A	N/A	LONG SEAM	-	Y	-	-	-	-	-	(B-J, B9.12) PRR-10
12R-O-15BLU	N/A	N/A	LONG SEAM	-	Y	-	-	-	-	-	(B-J, B9.12) PRR-10
12R-O-15LD	N/A	N/A	LONG SEAM	-	Y	-	-	-	-	-	(B-J, B9.12) PRR-10
12R-O-16ALD	N/A	N/A	LONG SEAM	-	Y	-	-	-	-	-	(B-J, B9.12) PRR-10
12R-O-16BLD	N/A	N/A	LONG SEAM	-	Y	-	-	-	-	-	(B-J, B9.12) PRR-10
12R-O-16LU	N/A	N/A	LONG SEAM	-	Y	-	-	-	-	-	(B-J, B9.12) PRR-10
12R-O-17ALU	N/A	N/A	LONG SEAM	-	Y	-	-	-	-	-	(B-J, B9.12) PRR-10
12R-O-17BLU	N/A	N/A	LONG SEAM	-	Y	-	-	-	-	-	(B-J, B9.12) PRR-10
12-VB-1201-2	B-G-2	B7.70	VALVE BOLTING	-	Y	1	-	-	-	-	PRR-14, I2P1, I3P1
12R-O-18ALD	N/A	N/A	LONG SEAM	-	Y	-	-	-	-	-	(B-J, B9.12) PRR-10
12R-O-13LD	N/A	N/A	LONG SEAM	-	Y	-	-	-	-	-	(B-J, B9.12) PRR-10
12R-O-15	R-A	R1.20	45 ELBOW TO PIPE	A	Y	-	-	-	-	-	IGSCC; (B-J, B9.11) PRR-10
12-VB-1201-85	B-G-2	B7.70	VALVE BOLTING	-	Y	-	2	-	-	-	PRR-14, I2P2, I3P2
12-O-26R	R-A	R1.20	PIPE TO BEND	A	Y	-	-	-	-	-	IGSCC; (B-J, B9.11) PRR-10
12-O-27R	R-A	R1.20	BEND TO PIPE	A	Y	-	-	-	-	-	IGSCC; (B-J, B9.11) PRR-10
12-O-28R	R-A	R1.20	PIPE TO ELBOW	A	Y	-	-	3	-	-	RI-ISI; IGSCC; (B-J, B9.11); PRR-10; I3P3

RWCU
Drawing Number: ISI-I-12-1SH1
Line Number: 6-DCA-12

COMPONENT IDENTIFICATION	ASME CODE CAT	ASME CODE ITEM	DESCRIPTION	IGSCC CAT.	REL REQ	4TH ISI INTERVAL PER1	PER2	PER3	FAC PROGRAM EXAM CREDIT	IGSCC PROGRAM EXAM CREDIT	REMARKS
12-O-29R	R-A	R1.20	ELBOW TO PIPE	A	Y	1	-	-	-	-	RI-ISI; IGSCC; (B-J, B9.11); PRR-10; I2P1, I3P'
12-O-30R	R-A	R1.20	PIPE TO ELBOW	A	Y	1	-	-	-	-	RI-ISI; IGSCC; (B-J, B9.11); PRR-10; I2P1, I3P'
12-O-31A	R-A	R1.20	PIPE TO PIPE	A	Y	1	-	-	-	-	RI-ISI; IGSCC; (B-J, B9.11); PRR-10; I3P1
12-O-31R	R-A	R1.20	ELBOW TO PIPE	A	Y	1	-	-	-	-	RI-ISI; IGSCC; (B-J, B9.11); PRR-10; I2P1, I3P'
12R-O-10R	R-A	R1.20	PIPE TO VALVE	A	Y	-	-	-	-	-	IGSCC; (B-J, B9.11) PRR-10
12R-O-11R	R-A	R1.20	VALVE TO PIPE	A	Y	-	-	-	-	-	IGSCC; (B-J, B9.11) PRR-10, I2P3
12R-O-12	R-A	R1.20	PIPE TO ELBOW	A	Y	-	-	-	-	-	IGSCC; (B-J, B9.11) PRR-10
12R-O-14	R-A	R1.20	PIPE TO 45 ELBOW	A	Y	-	-	-	-	-	IGSCC; (B-J, B9.11) PRR-10
12R-O-32R1	R-A	R1.20	PIPE TO VALVE	A	Y	-	-	-	-	-	IGSCC; (B-J, B9.11) PRR-10
12R-O-16	R-A	R1.20	PIPE TO ELBOW	A	Y	-	-	-	-	-	IGSCC; (B-J, B9.11) PRR-10
12R-O-17	R-A	R1.20	ELBOW TO PIPE	A	Y	-	-	-	-	-	IGSCC; (B-J, B9.11) PRR-10
12R-O-18	R-A	R1.20	PIPE TO ELBOW	A	Y	-	-	-	-	-	IGSCC; (B-J, B9.11) PRR-24
12R-O-19	R-A	R1.20	ELBOW TO PIPE	A	Y	-	-	-	-	-	IGSCC; (B-J, B9.11) PRR-10
12R-O-19A	R-A	R1.20	PIPE TO ELBOW	A	Y	-	-	-	-	-	IGSCC; (B-J, B9.11) PRR-10
12R-O-1A	R-A	R1.20	SWEEPOLET TO ELBOW	A	Y	-	-	-	-	-	IGSCC; (B-J, B9.11) PRR-10, I2P2
12R-O-2	R-A	R1.20	45 ELBOW TO PIPE	A	Y	-	-	-	-	-	IGSCC; (B-J, B9.11) PRR-10
12R-O-4	R-A	R1.20	45 ELBOW TO PIPE	A	Y	-	-	-	-	-	IGSCC; (B-J, B9.11) PRR-10
12R-O-20	R-A	R1.20	ELBOW TO PIPE	A	Y	-	-	-	-	-	IGSCC; (B-J, B9.11) PRR-10
12R-O-22A-BLD	N/A	N/A	LONG SEAM	-	Y	-	-	-	-	-	(B-J, B9.12) PRR-10

COMPONENT IDENTIFICATION	ASME CODE CAT	ASME CODE ITEM	DESCRIPTION	IGSCC CAT.	REL REQ	4TH ISI INTERVAL PER1	PER2	PER3	FAC PROGRAM EXAM CREDIT	IGSCC PROGRAM EXAM CREDIT	REMARKS
RWCU **Drawing Number: ISI-I-12-1SH1** **Line Number: 6-DCA-12**											
12R-O-21	R-A	R1.20	PIPE TO ELBOW	A	Y	-	-	-	-	-	IGSCC; (B-J, B9.11) PRR-10
12R-O-22	R-A	R1.20	ELBOW TO PIPE	A	Y	-	-	-	-	-	IGSCC; (B-J, B9.11) PRR-10
12R-O-22A	R-A	R1.20	PIPE TO ELBOW	A	Y	-	-	-	-	-	IGSCC; (B-J, B9.11) PRR-10, I2P3
12R-O-18BLD	N/A	N/A	LONG SEAM	-	Y	-	-	-	-	-	(B-J, B9.12) PRR-10, PRR-24
12R-O-13	R-A	R1.20	ELBOW TO PIPE	A	Y	-	-	-	-	-	IGSCC; (B-J, B9.11) PRR-10
12R-O-9ALU	N/A	N/A	LONG SEAM	-	Y	-	-	-	-	-	(B-J, B9.12) PRR-10
12R-O-4ALU	N/A	N/A	LONG SEAM	-	Y	-	-	-	-	-	(B-J, B9.12) PRR-10
12R-O-19A-ALD	N/A	N/A	LONG SEAM	-	Y	-	-	-	-	-	(B-J, B9.12) PRR-10
12R-O-4LD	N/A	N/A	LONG SEAM	-	Y	-	-	-	-	-	(B-J, B9.12) PRR-10
12R-O-17LD	N/A	N/A	LONG SEAM	-	Y	-	-	-	-	-	(B-J, B9.12) PRR-10
12R-O-5LU	N/A	N/A	LONG SEAM	-	Y	-	-	-	-	-	(B-J, B9.12) PRR-10
12R-O-6ALD	N/A	N/A	LONG SEAM	-	Y	-	-	-	-	-	(B-J, B9.12) PRR-10
12R-O-6BLD	N/A	N/A	LONG SEAM	-	Y	-	-	-	-	-	(B-J, B9.12) PRR-10
12R-O-7ALU	N/A	N/A	LONG SEAM	-	Y	-	-	-	-	-	(B-J, B9.12) PRR-10
12R-O-7BLU	N/A	N/A	LONG SEAM	-	Y	-	-	-	-	-	(B-J, B9.12) PRR-10
12R-O-7LD	N/A	N/A	LONG SEAM	-	Y	-	-	-	-	-	(B-J, B9.12) PRR-10
12R-O-8ALD	N/A	N/A	LONG SEAM	-	Y	-	-	-	-	-	(B-J, B9.12) PRR-10
12R-O-3LU	N/A	N/A	LONG SEAM	-	Y	-	-	-	-	-	(B-J, B9.12) PRR-10
12R-O-8LU	N/A	N/A	LONG SEAM	-	Y	-	-	-	-	-	(B-J, B9.12) PRR-10

COMPONENT IDENTIFICATION	ASME CODE CAT	ASME CODE ITEM	DESCRIPTION	IGSCC CAT.	REL REQ	4TH ISI INTERVAL PER1	PER2	PER3	FAC PROGRAM EXAM CREDIT	IGSCC PROGRAM EXAM CREDIT	REMARKS
RWCU											
Drawing Number: ISI-I-12-1SH1											
Line Number: 6-DCA-12											
12R-O-4BLU	N/A	N/A	LONG SEAM	-	Y	-	-	-	-	-	(B-J, B9.12) PRR-10
12R-O-9BLU	N/A	N/A	LONG SEAM	-	Y	-	-	-	-	-	(B-J, B9.12) PRR-10
12R-O-9LD	N/A	N/A	LONG SEAM	-	Y	-	-	-	-	-	(B-J, B9.12) PRR-10
12R-O-1	R-A	R1.20	PIPE TO SWEEP-O-LET	A	Y	1	-	-	-	-	IGSCC; (B-J, B9.31) PRR-10, I2P1, I3P1
12R-O-8PS-1	B-K	B10-20	PIPE STANCHION	-	-	-	-	-	-	-	H-12-1-11
12-VI-1201-2	B-M-2	B12.50	VALVE INTERNALS	-	-	-	-	-	-	-	-
12-VI-1201-85	B-M-2	B12.50	VALVE INTERNALS	-	-	-	-	-	-	-	-
H-12-1-97	F-A	F1.10-B	GUIDE	-	-	-	-	-	-	-	I2P2
H-12-1-11	F-A	F1.10-C	SPRING HANGER	-	-	1	-	-	-	-	I2P1, I3P1, 12R-O-8PS-1
H-12-1-12	F-A	F1.10-C	SPRING HANGER	-	-	-	-	-	-	-	I2P1
H-12-1-13	F-A	F1.10-C	SPRING HANGER	-	-	-	-	-	-	-	I2P1
H-12-1-14	F-A	F1.10-C	SPRING HANGER	-	-	-	-	-	-	-	I2P1, I3P2
12R-O-8BLD	N/A	N/A	LONG SEAM	-	Y	-	-	-	-	-	(B-J, B9.12) PRR-10
12R-O-20BLU	N/A	N/A	LONG SEAM	-	Y	-	-	-	-	-	(B-J, B9.12) PRR-10
12R-O-19A-BLD	N/A	N/A	LONG SEAM	-	Y	-	-	-	-	-	(B-J, B9.12) PRR-10
12R-O-19A-LU	N/A	N/A	LONG SEAM	-	Y	-	-	-	-	-	(B-J, B9.12) PRR-10
12R-O-19ALU	N/A	N/A	LONG SEAM	-	Y	-	-	-	-	-	(B-J, B9.12) PRR-10
12R-O-19BLU	N/A	N/A	LONG SEAM	-	Y	-	-	-	-	-	(B-J, B9.12) PRR-10
12R-O-19LD	N/A	N/A	LONG SEAM	-	Y		-	-	-	-	(B-J, B9.12) PRR-10

COMPONENT IDENTIFICATION	ASME CODE CAT	ASME CODE ITEM	DESCRIPTION	IGSCC CAT.	REL REQ	4TH ISI INTERVAL PER1	PER2	PER3	FAC PROGRAM EXAM CREDIT	IGSCC PROGRAM EXAM CREDIT	REMARKS
RWCU Drawing Number: ISI-I-12-1SH1 Line Number: 6-DCA-12											
12R-O-1A-ALD	N/A	N/A	LONG SEAM	-	Y	-	-	-	-	-	(B-J, B9.12) PRR-10
12R-O-20ALU	N/A	N/A	LONG SEAM	-	Y	-	-	-	-	-	(B-J, B9.12) PRR-10
12R-O-3BLD	N/A	N/A	LONG SEAM	-	Y	-	-	-	-	-	(B-J, B9.12) PRR-10
12R-O-20LD	N/A	N/A	LONG SEAM	-	Y	-	-	-	-	-	(B-J, B9.12) PRR-10
12R-O-21ALD	N/A	N/A	LONG SEAM	-	Y	-	-	-	-	-	(B-J, B9.12) PRR-10
12R-O-21BLD	N/A	N/A	LONG SEAM	-	Y	-	-	-	-	-	(B-J, B9.12) PRR-10
12R-O-21LU	N/A	N/A	LONG SEAM	-	Y	-	-	-	-	-	(B-J, B9.12) PRR-10
12R-O-23ALU	N/A	N/A	LONG SEAM	-	Y	-	-	-	-	-	(B-J, B9.12) PRR-10
12R-O-2LD	N/A	N/A	LONG SEAM	-	Y	-	-	-	-	-	(B-J, B9.12) PRR-10
12R-O-2BLU	N/A	N/A	LONG SEAM	-	Y	-	-	-	-	-	(B-J, B9.12) PRR-10
12R-O-1A-BLD	N/A	N/A	LONG SEAM	-	Y	-	-	-	-	-	(B-J, B9.12) PRR-10
12R-O-3ALD	N/A	N/A	LONG SEAM	-	Y	-	-	-	-	-	(B-J, B9.12) PRR-10
12R-O-22A-ALD	N/A	N/A	LONG SEAM	-	Y	-	-	-	-	-	(B-J, B9.12) PRR-10
12R-O-23BLU	N/A	N/A	LONG SEAM	-	Y	-	-	-	-	-	(B-J, B9.12) PRR-10
12R-O-2ALU	N/A	N/A	LONG SEAM	-	Y	-	-	-	-	-	(B-J, B9.12) PRR-10
12R-O-22LD	N/A	N/A	LONG SEAM	-	Y	-	-	-	-	-	(B-J, B9.12) PRR-10
12R-O-22BLU	N/A	N/A	LONG SEAM	-	Y	-	-	-	-	-	(B-J, B9.12) PRR-10
12R-O-22ALU	N/A	N/A	LONG SEAM	-	Y	-	-	-	-	-	(B-J, B9.12) PRR-10
12R-O-22A-LU	N/A	N/A	LONG SEAM	-	Y	-	-	-	-	-	(B-J, B9.12) PRR-10

COMPONENT IDENTIFICATION	ASME CODE CAT	ASME CODE ITEM	DESCRIPTION	IGSCC CAT.	REL REQ	4TH ISI INTERVAL PER1	PER2	PER3	FAC PROGRAM EXAM CREDIT	IGSCC PROGRAM EXAM CREDIT	REMARKS
RWCU											
Drawing Number: ISI-I-12-1SH1											
Line Number: 6-DCA/EA-12											
12R-O-23	R-A	R1.20	ELBOW TO PENETRATION	D	Y	-	-	-	-	-	IGSCC; (B-J, B9.11) PRR-10, I2P2, I3P1
Line Number: 6-EA-12											
12-O-23A	R-A	R1.20	PENETRATION TO FLUED HEAD	G	Y	-	-	-	-	-	IGSCC; (B-J, B9.11) PRR-10, PRR-24
12-O-24	R-A	R1.20	PENETRATION TO PIPE	C	Y	-	2	-	-	Y	RI-ISI; IGSCC; (B-J, B9.11); PRR-10; I2P1, I3P2
12-VB-1201-5	B-G-2	B7.70	VALVE BOLTING	-	Y	-	2	-	-	-	PRR-14, I2P1, I3P2
H-12-1-20	F-A	F1.10-C	SPRING HANGER	-	-	-	-	-	-	-	I2P1
H-12-1-X14	F-A	F1.10-B	ANCHOR	-	-	-	-	-	-	-	I2P2
H-12-1-115	F-A	F1.10-B	RIGID HANGER	-	-	-	-	-	-	-	I2P2, Outside class 1 boundary
12-VI-1201-5	B-M-2	B12.50	VALVE INTERNALS	-	-	-	-	-	-	-	-
H-12-1-99	F-A	F1.10-B	GUIDE	-	-	-	-	-	-	-	I2P1
Line Number: 6-EA/DCA-12											
12-O-25R	R-A	R1.20	PIPE TO PIPE	C	Y	-	-	-	-	-	IGSCC; (B-J, B9.11) PRR-10

COMPONENT IDENTIFICATION	ASME CODE CAT	ASME CODE ITEM	DESCRIPTION	ASME CODE EXAM	REL REQ	4TH ISI INTERVAL PER1	PER2	PER3	WELD LTH OR THICK	REMARKS
SBLC **Drawing Number: ISI-I-11-1** **Line Number: N/A**										
H-11-1-P207A	N/A	N/A	PUMP SUPPORT	-	-	-	-	-	-	I2P3
H-11-1-P207B	N/A	N/A	PUMP SUPPORT	-	-	-	-	-	-	-
SLT SLC-1	C-H	C7.10	SLC SUCTION	VT-2	-	1	2	3	-	
SLT SLC-2	B-P	B15.50	DISCH PRESS BOUNDARY	VT-2	Y	-	-	-	-	PRR-4; each RFO
SLT SLC-3	C-H	C7.10	DISCH PRESS BOUNDARY	VT-2	-	1	2	3	-	
SLT SLC-4	B-P	B15.50	DISCH PRESS BOUNDARY	VT-2	Y	-	-	-	-	PRR-4; each RFO

COMPONENT IDENTIFICATION	ASME CODE CAT	ASME CODE ITEM	DESCRIPTION	ASME CODE EXAM	REL REQ	4TH ISI INTERVAL PER1	PER2	PER3	WELD LTH OR THICK	REMARKS
SBLC **Drawing Number: ISI-I-11-1** **Line Number: 1 ½"-DC**										
B-11-149	R-A	R1.20	PIPE TO TEE	-	Y	-	-	-	-	(B-J, B9.40) PRR-10
B-11-154	R-A	R1.20	PIPE TO PIPE	-	Y	-	-	-	-	(B-J, B9.40) PRR-10
B-11-184	R-A	R1.20	ELBOW TO PIPE	-	Y	-	-	-	-	(B-J, B9.40) PRR-10
B-11-185	R-A	R1.20	PIPE TO ELBOW	-	Y	-	-	-	-	(B-J, B9.40) PRR-10
B-11-185A	R-A	R1.20	SOCKET TO PIPE	-	Y	-	-	-	-	(B-J, B9.40) PRR-10
B-11-185B	R-A	R1.20	PIPE TO SOCKET	-	Y	-	-	-	-	(B-J, B9.40) PRR-10
B-11-186	R-A	R1.20	ELBOW TO PIPE	-	Y	-	-	-	-	(B-J, B9.40) PRR-10
B-11-187	R-A	R1.20	PIPE TO ELBOW	-	Y	-	-	-	-	(B-J, B9.40) PRR-10
B-11-188	R-A	R1.20	PIPE TO SOCKET	-	Y	-	-	-	-	(B-J, B9.40) PRR-10, I2P3
B-11-189	R-A	R1.20	SOCKET TO PIPE	-	Y	-	-	-	-	(B-J, B9.40) PRR-10, I2P3
B-11-190A	R-A	R1.20	PIPE TO ELBOW	-	Y	-	-	-	-	(B-J, B9.40) PRR-10
B-11-191	R-A	R1.20	ELBOW TO PIPE	-	Y	-	-	-	-	(B-J, B9.40) PRR-10
B-11-192	R-A	R1.20	PIPE TO ELBOW	-	Y	-	-	-	-	(B-J, B9.40) PRR-10
B-11-193	R-A	R1.20	ELBOW TO PIPE	-	Y	-	-	-	-	(B-J, B9.40) PRR-10
B-11-193A	R-A	R1.20	PIPE TO ELBOW	-	Y	-	-	-	-	(B-J, B9.40) PRR-10
B-11-255	R-A	R1.20	SOCKET TO ELBOW	-	Y	-	-	-	-	(B-J, B9.40) PRR-10
B-11-256	R-A	R1.20	PIPE TO SOCKET	-	Y	-	-	-	-	(B-J, B9.40) PRR-10
B-11-291	R-A	R1.20	PIPE TO SOCKET	-	Y	-	-	-	-	(B-J, B9.40) PRR-10, I2P3
B-11-292	R-A	R1.20	SOCKET TO PIPE	-	Y	-	-	-	-	(B-J, B9.40) PRR-10, I2P3

COMPONENT IDENTIFICATION	ASME CODE CAT	ASME CODE ITEM	DESCRIPTION	ASME CODE EXAM	REL REQ	4TH ISI INTERVAL PER1	PER2	PER3	WELD LTH OR THICK	REMARKS
SBLC Drawing Number: ISI-I-11-1 Line Number: 1 ½"-DC										
B-11-152	R-A	R1.20	PIPE TO PIPE	-	Y	-	-	-	-	(B-J, B9.40) PRR-10
B-11-153	R-A	R1.20	PIPE TO PIPE	-	Y	-	-	-	-	(B-J, B9.40) PRR-10
B-11-157	R-A	R1.20	PIPE TO VALVE	-	Y	-	-	-	-	(B-J, B9.40) PRR-10
B-11-159	R-A	R1.20	PIPE TO VALVE	-	Y	-	-	-	-	(B-J, B9.40) PRR-10
B-11-158	R-A	R1.20	VALVE TO PIPE	-	Y	-	-	-	-	(B-J, B9.40) PRR-10
B-11-160	R-A	R1.20	ELBOW TO PIPE	-	Y	-	-	-	-	(B-J, B9.40) PRR-10
B-11-161	R-A	R1.20	PIPE TO ELBOW	-	Y	-	-	-	-	(B-J, B9.40) PRR-10
B-11-162	R-A	R1.20	SOCKET TO PIPE	-	Y	-	-	-	-	(B-J, B9.40) PRR-10
B-11-163	R-A	R1.20	ELBOW TO SOCKET	-	Y	-	-	-	-	(B-J, B9.40) PRR-10
B-11-164	R-A	R1.20	ELBOW TO PIPE	-	Y	-	-	-	-	(B-J, B9.40) PRR-10
B-11-165	R-A	R1.20	PIPE TO ELBOW	-	Y	-	-	-	-	(B-J, B9.40) PRR-10, I2P2
B-11-166	R-A	R1.20	PIPE TO PIPE	-	Y	-	-	-	-	(B-J, B9.40) PRR-10
B-11-178	R-A	R1.20	ELBOW TO PIPE	-	Y	-	-	-	-	(B-J, B9.40) PRR-10, I2P2
B-11-180	R-A	R1.20	ELBOW TO PIPE	-	Y	-	-	-	-	(B-J, B9.40) PRR-10
B-11-181	R-A	R1.20	PIPE TO ELBOW	-	Y	-	-	-	-	(B-J, B9.40) PRR-10
B-11-179	R-A	R1.20	PIPE TO ELBOW	-	Y	-	-	-	-	(B-J, B9.40) PRR-10
B-11-190	R-A	R1.20	ELBOW TO PIPE	-	Y	-	-	-	-	(B-J, B9.40) PRR-10
B-11-304	R-A	R1.20	ELBOW TO PIPE	-	Y	-	-	-	-	(B-J, B9.40) PRR-10, I2P1, I3P1

COMPONENT IDENTIFICATION	ASME CODE CAT	ASME CODE ITEM	DESCRIPTION	ASME CODE EXAM	REL REQ	4TH ISI INTERVAL PER1	PER2	PER3	WELD LTH OR THICK	REMARKS
SBLC **Drawing Number: ISI-I-11-1** **Line Number: 1 ½"-DC**										
B-11-305	R-A	R1.20	PIPE TO ELBOW	-	Y	-	-	-	-	(B-J, B9.40) PRR-10, I2P1, I3P1
B-11-155	R-A	R1.20	PIPE TO PIPE	-	Y	-	-	-	-	(B-J, B9.40) PRR-10
B-11-156	R-A	R1.20	VALVE TO PIPE	-	Y	-	-	-	-	(B-J, B9.40) PRR-10
B-11-167	R-A	R1.20	PIPE TO PIPE	-	Y	-	-	-	-	(B-J, B9.40) PRR-10
B-11-181A	R-A	R1.20	SOCKET TO PIPE	-	Y	-	-	-	-	(B-J, B9.40) PRR-10, I2P2
B-11-181B	R-A	R1.20	PIPE TO SOCKET	-	Y	-	-	-	-	(B-J, B9.40) PRR-10, I2P2
B-11-182	R-A	R1.20	ELBOW TO PIPE	-	Y	-	-	-	-	(B-J, B9.40) PRR-10
B-11-183	R-A	R1.20	PIPE TO ELBOW	-	Y	-	-	-	-	(B-J, B9.40) PRR-10
B-11-306	R-A	R1.20	ELBOW TO PIPE	-	Y	-	-	-	-	(B-J, B9.40) PRR-10
B-11-72	R-A	R1.20	PIPE TO TEE	-	Y	-	-	-	-	(B-J, B9.40) PRR-10
B-11-309	R-A	R1.20	PIPE TO ELBOW	-	Y	-	-	-	-	(B-J, B9.40) PRR-10
B-11-307	R-A	R1.20	PIPE TO ELBOW	-	Y	-	-	-	-	(B-J, B9.40) PRR-10
B-11-78	R-A	R1.20	PIPE TO ELBOW	-	Y	-	-	3	-	RI-ISI; (B-J, B9.40); PRR-10; I3P3
B-11-79R	R-A	R1.20	ELBOW TO PIPE	-	Y	-	-	3	-	RI-ISI; (B-J, B9.40); PRR-10; I3P3; repaired in RFO15 (formerly B-11-79)
B-11-71	R-A	R1.20	VALVE TO PIPE	-	Y	-	-	-	-	(B-J, B9.40) PRR-10
B-11-73	R-A	R1.20	TEE TO PIPE	-	Y	-	-	-	-	(B-J, B9.40) PRR-10
B-11-311	R-A	R1.20	PIPE TO ELBOW	-	Y	-	-	-	-	(B-J, B9.40) PRR-10
B-11-321	R-A	R1.20	PIPE TO ELBOW	-	Y	-	-	-	-	(B-J, B9.40) PRR-10, I2P1, I3P1

COMPONENT IDENTIFICATION	ASME CODE CAT	ASME CODE ITEM	DESCRIPTION	ASME CODE EXAM	REL REQ	4TH ISI INTERVAL PER1	PER2	PER3	WELD LTH OR THICK	REMARKS
SBLC Drawing Number: ISI-I-11-1 Line Number: 1 ½"-DC										
B-11-75	R-A	R1.20	PIPE TO PIPE	-	Y	-	-	3	-	RI-ISI; (B-J, B9.40); PRR-10; I3P3
B-11-308	R-A	R1.20	ELBOW TO PIPE	-	Y	-	-	-	-	(B-J, B9.40) PRR-10
B-11-310	R-A	R1.20	ELBOW TO PIPE	-	Y	-	-	-	-	(B-J, B9.40) PRR-10
B-11-312	R-A	R1.20	ELBOW TO PIPE	-	Y	-	-	-	-	(B-J, B9.40) PRR-10
B-11-313	R-A	R1.20	PIPE TO ELBOW	-	Y	-	-	-	-	(B-J, B9.40) PRR-10
B-11-314	R-A	R1.20	ELBOW TO PIPE	-	Y	-	-	-	-	(B-J, B9.40) PRR-10
B-11-315	R-A	R1.20	PIPE TO ELBOW	-	Y	-	-	-	-	(B-J, B9.40) PRR-10
B-11-316	R-A	R1.20	ELBOW TO PIPE	-	Y	-	-	-	-	(B-J, B9.40) PRR-10
B-11-317	R-A	R1.20	PIPE TO ELBOW	-	Y	-	-	-	-	(B-J, B9.40) PRR-10
B-11-318	R-A	R1.20	ELBOW TO PIPE	-	Y	-	-	-	-	(B-J, B9.40) PRR-10, I2P2
B-11-319	R-A	R1.20	PIPE TO ELBOW	-	Y	-	-	-	-	(B-J, B9.40) PRR-10, I2P2
B-11-320	R-A	R1.20	ELBOW TO PIPE	-	Y	-	-	-	-	(B-J, B9.40) PRR-10, I2P1, I3P1
B-11-322	R-A	R1.20	ELBOW TO PIPE	-	Y	-	-	-	-	(B-J, B9.40) PRR-10, I2P1, I3P1
B-11-323	R-A	R1.20	PIPE TO ELBOW	-	Y	-	-	-	-	(B-J, B9.40) PRR-10, I2P1, I3P1

COMPONENT IDENTIFICATION	ASME CODE CAT	ASME CODE ITEM	DESCRIPTION	ASME CODE EXAM	REL REQ	4TH ISI INTERVAL PER1	PER2	PER3	WELD LTH OR THICK	REMARKS
SBLC Drawing Number: ISI-I-11-1 Line Number: 1 ½"-DC-11										
H-11-1-17	F-A	F1.10-C	SPRING HANGER	-	-	-	-	-	-	I2P1
H-11-1-20	F-A	F1.10-B	GUIDE	-	-	-	-	-	-	I2P1
H-11-1-27	F-A	F1.10-B	GUIDE	-	-	-	-	-	-	I2P2
H-11-1-28	F-A	F1.10-B	GUIDE	-	-	-	-	-	-	I2P2
H-11-1-29	F-A	F1.10-B	GUIDE	-	-	-	-	-	-	I2P2
H-11-1-30	F-A	F1.10-B	GUIDE	-	-	-	2	-	-	I2P2, I3P2
H-11-1-31	F-A	F1.10-B	GUIDE	-	-	-	-	-	-	I2P2
H-11-1-32	F-A	F1.10-B	GUIDE	-	-	-	2	-	-	I2P1, I3P2
H-11-1-33	F-A	F1.10-B	GUIDE	-	-	-	-	-	-	I2P1
H-11-1-34	F-A	F1.10-B	GUIDE	-	-	-	-	-	-	I2P1
H-11-1-35	F-A	F1.10-B	GUIDE	-	-	-	-	-	-	I2P1
H-11-1-36	F-A	F1.10-B	GUIDE	-	-	-	-	-	-	I2P2
H-11-1-37	F-A	F1.10-B	GUIDE	-	-	1	-	-	-	I2P2, I3P2
H-11-1-38	F-A	F1.10-B	GUIDE	-	-	1	-	-	-	I2P3, I3P1
H-11-1-39	F-A	F1.10-B	GUIDE	-	-	-	-	-	-	I2P3
H-11-1-40	F-A	F1.10-B	GUIDE	-	-	1	-	-	-	I2P2, I3P2
H-11-1-X42	F-A	F1.10-B	ANCHOR	-	Y	-	-	-	-	PRR 1, I2P1
11-VB-1101-15	B-G-2	B7.70	VALVE BOLTING	-	Y	-	2	-	-	PRR-14, I2P2, I3P2

COMPONENT IDENTIFICATION	ASME CODE CAT	ASME CODE ITEM	DESCRIPTION	ASME CODE EXAM	REL REQ	4TH ISI INTERVAL PER1	PER2	PER3	WELD LTH OR THICK	REMARKS
SBLC										
Drawing Number: ISI-I-11-1										
Line Number: 1 ½"-DC-11										
11-VB-1101-16	B-G-2	B7.70	VALVE BOLTING	-	Y	1	-	-	-	PRR-14, I2P1, I3P1
H-11-1-18	F-A	F1.10-B	GUIDE	-	-	-	2	-	-	I2P1, I3P2
H-11-1-19	F-A	F1.10-A	RIGID HANGER	-	-	-	2	-	-	I2P1, I3P2
H-11-1-21	F-A	F1.10-B	GUIDE	-	-	-	-	-	-	I2P2
H-11-1-22	F-A	F1.10-B	GUIDE	-	-	-	-	-	-	I2P2
H-11-1-23	F-A	F1.10-B	GUIDE	-	-	-	-	-	-	I2P2
H-11-1-24	F-A	F1.10-B	GUIDE	-	-	1	-	-	-	I2P2, I3P2
H-11-1-25	F-A	F1.10-B	GUIDE	-	-	-	-	-	-	I2P2
H-11-1-26	F-A	F1.10-B	GUIDE	-	-	-	-	-	-	I2P2
11-VB-1101-1	B-G-2	B7.70	VALVE BOLTING	-	Y	-	2	-	-	PRR-14, I2P2, I3P2

COMPONENT IDENTIFICATION	ASME CODE CAT	ASME CODE ITEM	DESCRIPTION	ASME CODE EXAM	REL REQ	4TH ISI INTERVAL PER1	PER2	PER3	WELD LTH OR THICK	REMARKS
SBLC										
Drawing Number: ISI-I-11-1										
Line Number: 2"-DC										
RPV-N14-2	R-A	R1.20	TEE-TO PIPE WELD	-	-	-	-	-	-	CR-PNP-2005-00319
RPV-N14-T1	R-A	R1.20	REDUCER-TO-TEE WELD	-	-	-	-	-	-	CR-PNP-2005-00319
RPV-N14-T2	R-A	R1.20	REDUCER-TO-TEE WELD	-	-	-	-	-	-	CR-PNP-2005-00319

COMPONENT IDENTIFICATION	ASME CODE CAT	ASME CODE ITEM	DESCRIPTION	ASME CODE EXAM	REL REQ	4TH ISI INTERVAL PER1	PER2	PER3	WELD LTH OR THICK	REMARKS
SSW										
Drawing Number: ISI-I-29-1SH1										
Line Number: N/A										
SLT SSW-2	D-B	D2.10	PRESSURE BOUNDARY	VT-2	-	1	2	3	-	PIL-05-R-003
SLT SSW-3	D-B	D2.10	PRESSURE BOUNDARY	VT-2	-	1	2	3	-	PIL-05-R-003
Line Number: 12-JF-29										
H-29-1-5SR	F-A	F1.30-B	RIGID HANGER	-	-	-	-	-	-	I2P1
H-29-1-13	F-A	F1.30-A	RIGID HANGER	-	-	-	-	-	-	I2P1
H-29-1-15	F-A	F1.30-A	RIGID HANGER	-	-	-	-	-	-	I2P1
Line Number: 14-JF-29										
H-29-1-3SR	F-A	F1.30-B	RIGID HANGER	-	-	-	-	-	-	I2P1
Line Number: 18-JF-29										
H-29-1-1	F-A	F1.30-A	RIGID HANGER	-	-	-	-	-	-	I2P1
H-29-1-2	F-A	F1.30-A	RIGID HANGER	-	-	-	-	-	-	I2P1
H-29-1-4	F-A	F1.30-A	RIGID HANGER	-	-	-	-	-	-	I2P1
H-29-1-11	F-A	F1.30-B	RIGID HANGER	-	-	-	-	-	-	I2P1
H-29-1-16	F-A	F1.30-A	RIGID HANGER	-	-	-	-	-	-	I2P2
H-29-1-17	F-A	F1.30-A	RIGID HANGER	-	-	-	-	-	-	I2P2
H-29-1-19	F-A	F1.30-A	RIGID HANGER	-	-	-	-	-	-	I2P1
H-29-1-20	F-A	F1.30-B	RIGID HANGER	-	-	-	-	-	-	I2P1
H-29-1-863	F-A	F1.30-A	PIPE RESTRAINT	-	-	-	2	-	-	I2P1, I3P2

COMPONENT IDENTIFICATION	ASME CODE CAT	ASME CODE ITEM	DESCRIPTION	ASME CODE EXAM	REL REQ	4TH ISI INTERVAL PER1	PER2	PER3	WELD LTH OR THICK	REMARKS
SSW										
Drawing Number: ISI-I-29-1SH1										
Line Number: 18-JF-29										
H-29-1-5	F-A	F1.30-B	RIGID HANGER	-	-	-	2	-	-	I2P2, I3P2
H-29-1-6	F-A	F1.30-B	RIGID HANGER	-	-	-	-	-	-	I2P2
H-29-1-21	F-A	F1.30-B	RIGID HANGER	-	-	-	-	-	-	I2P1
H-29-1-1SR	F-A	F1.30-A	RIGID HANGER	-	-	-	-	-	-	I2P1
H-29-1-2SR	F-A	F1.30-B	RIGID HANGER	-	-	-	-	-	-	I2P1
H-29-1-4SA	F-A	F1.30-B	RIGID HANGER	-	-	-	-	-	-	I2P1
H-29-1-6SR	F-A	F1.30-B	RIGID HANGER	-	-	-	-	-	-	I2P1
H-29-1-862	F-A	F1.30-B	PIPE SUPPORT	-	-	-	-	-	-	I2P1
H-29-1-1045	F-A	F1.30-B	RESTRAINT	-	-	-	-	-	-	I2P2
Line Number: 22-JF-29										
H-29-1-8	F-A	F1.30-A	RIGID HANGER	-	-	-	-	-	-	I2P1
H-29-1-12	F-A	F1.30-A	RIGID HANGER	-	-	-	-	-	-	I2P1

COMPONENT IDENTIFICATION	ASME CODE CAT	ASME CODE ITEM	DESCRIPTION	ASME CODE EXAM	REL REQ	4TH ISI INTERVAL PER1	PER2	PER3	WELD LTH OR THICK	REMARKS
SSW										
Drawing Number: ISI-I-29-1SH1										
Line Number: 22-JH-29										
H-29-1-47	F-A	F1.30-B	RESTRAINT	-	-	-	-	-	-	I2P3
H-29-1-48	F-A	F1.30-B	RESTRAINT	-	-	-	-	-	-	I2P3
H-29-1-51	F-A	F1.30-B	RESTRAINT	-	-	-	-	-	-	I2P3
H-29-1-52	F-A	F1.30-B	RESTRAINT	-	-	-	-	-	-	I2P3
H-29-1-53	F-A	F1.30-B	RESTRAINT	-	-	-	-	3	-	I2P3, I3P3
H-29-1-54	F-A	F1.30-B	RESTRAINT	-	-	-	-	-	-	I2P3

COMPONENT IDENTIFICATION	ASME CODE CAT	ASME CODE ITEM	DESCRIPTION	ASME CODE EXAM	REL REQ	4TH ISI INTERVAL PER1	PER2	PER3	WELD LTH OR THICK	REMARKS
SSW										
Drawing Number: ISI-I-29-1SH2										
Line Number: N/A										
SLT SSW-1	D-B	D2.10	PRESSURE BOUNDARY	VT-2	-	1	2	3	-	PIL-05-R-003
29-P208A-HL	D-A	D1.30	PUMP INTEGRAL ATTMT	-	-	-	-	3	-	I2P3, I3P3
29-P208B-HL	D-A	D1.30	PUMP INTEGRAL ATTMT	-	-	-	-	-	-	-
29-P208C-HL	D-A	D1.30	PUMP INTEGRAL ATTMT	-	-	-	-	-	-	-
29-P208D-HL	D-A	D1.30	PUMP INTEGRAL ATTMT	-	-	-	-	-	-	-
29-P208E-HL	D-A	D1.30	PUMP INTEGRAL ATTMT	-	-	-	-	-	-	-
H-29-1-P208A	F-A	F1.40	PUMP SUPPORT	-	-	-	-	3	-	I2P3, I3P3
H-29-1-P208B	F-A	F1.40	PUMP SUPPORT	-	-	-	-	-	-	-
H-29-1-P208C	F-A	F1.40	PUMP SUPPORT	-	-	-	-	-	-	-
H-29-1-P208D	F-A	F1.40	PUMP SUPPORT	-	-	-	-	-	-	-
H-29-1-P208E	F-A	F1.40	PUMP SUPPORT	-	-	-	-	-	-	-

COMPONENT IDENTIFICATION	ASME CODE CAT	ASME CODE ITEM	DESCRIPTION	ASME CODE EXAM	REL REQ	4TH ISI INTERVAL PER1	PER2	PER3	WELD LTH OR THICK	REMARKS
SSW Drawing Number: ISI-I-29-1SH2 Line Number: 12-JF-29										
H-29-1-22	F-A	F1.30-A	RIGID HANGER	-	-	-	-	-	-	I2P1
H-29-1-25	F-A	F1.30-A	RIGID HANGER	-	-	-	-	3	-	I2P1, I3P3
H-29-1-36	F-A	F1.30-B	RIGID HANGER	-	-	-	-	-	-	I2P1, I3P3
H-29-1-37	F-A	F1.30-B	RIGID HANGER	-	-	-	-	-	-	I2P1
H-29-1-1062	F-A	F1.30-B	GUIDE	-	-	-	-	-	-	I2P1
H-29-1-1063	F-A	F1.30-B	GUIDE	-	-	-	-	-	-	I2P1
H-29-1-1064	F-A	F1.30-B	GUIDE	-	-	-	-	-	-	I2P2
H-29-1-1065	F-A	F1.30-B	GUIDE	-	-	-	-	-	-	I2P1
H-29-1-11SG	F-A	F1.30-B	GUIDE	-	-	-	-	-	-	I2P1
H-29-1-12SG	F-A	F1.30-B	GUIDE	-	-	-	-	-	-	I2P1

COMPONENT IDENTIFICATION	ASME CODE CAT	ASME CODE ITEM	DESCRIPTION	ASME CODE EXAM	REL REQ	4TH ISI INTERVAL PER1	PER2	PER3	WELD LTH OR THICK	REMARKS
SSW										
Drawing Number: ISI-I-29-1SH2										
Line Number: 22-JF-29										
H-29-1-9SG	F-A	F1.30-B	RESTRAINT	-	-	-	-	-	-	I2P1
H-29-1-23	F-A	F1.30-A	RIGID HANGER	-	-	-	-	-	-	I2P1
H-29-1-24	F-A	F1.30-A	RIGID HANGER	-	-	-	-	-	-	I2P1
H-29-1-26	F-A	F1.30-A	RIGID HANGER	-	-	-	-	-	-	I2P1
H-29-1-27	F-A	F1.30-A	RIGID HANGER	-	-	-	2	-	-	I2P2, I3P2
H-29-1-10SG	F-A	F1.30-B	RESTRAINT	-	-	-	-	-	-	I2P1
H-29-1-45	F-A	F1.30-B	RIGID HANGER	-	-	-	-	-	-	I2P3
H-29-1-46	F-A	F1.30-A	RIGID HANGER	-	-	-	-	-	-	I2P3
H-29-1-49	F-A	F1.30-B	RESTRAINT	-	-	-	-	-	-	I2P3
H-29-1-50	F-A	F1.30-B	RESTRAINT	-	-	-	-	-	-	I2P3
Line Number: 6-JF-29										
H-29-1-1321SA	F-A	F1.30-B	ANCHOR	-	-	-	-	-	-	I2P2
JF-29-1321HL	D-A	D1.20	HANGER LUG	-	-	-	-	-	-	I2P3, I3P2
H-29-1-1333SA	F-A	F1.30-B	ANCHOR	-	-	-	-	-	-	I2P1
JF-29-1333HL	D-A	D1.20	HANGER LUG	-	-	-	-	-	-	I2P3, I3P2

SECTION 5.0

APPENDICES

APPENDIX A

ASME SECTION XI CODE CASES

Appendix A: ASME Section XI Code Cases

This Appendix provides a listing of ASME B&PV Code Cases that are applicable to, and may be employed by, PNPS during the Fourth Ten-Year ISI Interval. This Appendix is not intended to be all-inclusive.

ASME CODE CASE NUMBER	*TITLE*	*APPROVAL DATE*
N-416-2	Alternative Pressure Test Requirement for Welded Repairs or Installation of Replacement Items by Welding, Class 1, 2, and 3, Section XI, Division 1	May 5, 2000
N-460	Alternative Examination Coverage for Class 1 and Class 2 Welds, Section XI, Division 1	July 27, 1988
N-498-4	Alternative Requirements for 10-Year System Hydrostatic Testing for Class 1, 2, and 3 Systems, Section XI, Division 1	February 15, 1999
N-504-2	Alternative Rules for Repair of Class 1, 2, and 3 Austenitic Stainless Steel Piping, Section XI, Division 1	March 12, 1997
N-513	Evaluation Criteria for Temporary Acceptance of Flaws in Class 3 Piping, Section XI, Division 1	August 14, 1997
N-522	Pressure Testing of Containment Penetration Piping, Section XI, Division 1	December 9, 1993
N-523-2	Mechanical Clamping Devices for Class 2 and 3 Piping, Section XI, Division 1	October 2, 2000
N-524	Alternative Examination Requirements for Longitudinal Welds in Class 1 and 2 Piping, Section XI, Division 1	August 9, 1993
N-526	Alternative Requirements for Successive Inspections of Class 1 and 2 Vessels, Section XI, Division 1	August 9, 1996
N-532-1	Alternative Requirements to Repair and Replacement Documentation Requirements and Inservice Summary Report Preparation and Submission as Required by IWA-4000 and IWA-6000, Section XI, Division 1	March 28, 2001
N-533-1	Alternative Requirements for VT-2 Visual Examination of Class 1, 2, and 3 Insulated Pressure-Retaining Bolted Connections, Section XI, Division 1	February 26, 1999
N-537	Location of Ultrasonic Depth-Sizing Flaws, Section XI, Division 1	March 14, 1995
N-545	Alternative Requirements for Conduct of Performance Demonstration Detection Test of Reactor Vessel, Section XI, Division 1	August 24, 1995
N-546	Alternative Requirements for Qualification of VT-2 Examination Personnel, Section XI, Division 1	August 24, 1995

ASME CODE CASE NUMBER	*TITLE*	*APPROVAL DATE*
N-552	Alternative Methods - Qualification for Nozzle Inside Radius Section from the Outside Surface, Section XI, Division 1	December 12, 1995
N-578-1	Risk-Informed Requirements for Class 1, 2, and 3 Piping, Method B, Section XI, Division 1	March 28, 2000
N-583	Annual Training Alternative, Section XI, Division 1	August 14, 1997
N-588	Attenuation to Reference Flaw Orientation of Appendix G for Circumferential Welds in Reactor Vessels, Section XI, Division 1	December 12, 1997
N-597-1	Requirements for Analytical Evaluation of Pipe Wall Thinning, Section XI, Division 1	September 7, 2001
N-600	Transfer of Welder, Welding Operator, Brazer, and Brazing Operator Qualifications Between Owners, Section XI, Division 1	September 18, 2001
N-613-1	Ultrasonic Examination of Full Penetration Nozzles in Vessels, Examination Category B-D, Item No's. B3.10 and B3.90, Reactor Nozzle-To-Vessel Welds, Figs. IWB-2500-7(a), (b), and (c), Section XI, Division 1	August 20, 2002
N-623	Deferral of Inspections of Shell-to-Flange and Head-to-Flange Welds of a Reactor Vessel, Section XI, Division 1	February 26, 1999
N-624	Successive Inspections, Section XI, Division 1	May 7, 1999
N-629	Use of Fracture Toughness Test Data to Establish Reference Temperature for Pressure Retaining Materials, Section XI, Division 1	May 7, 1999
N-638	Similar and Dissimilar Metal Welding Using Ambient Temperature Machine GTAW Temper Bead Technique, Section XI, Division 1	September 24, 1999
N-639	Alternative Calibration Block Material, Section XI, Division 1	September 24, 1999
N-640	Alternative Reference Fracture Toughness for Development of P-T Limit Curves, Section XI, Division 1	February 26, 1999
N-641	Alternative Pressure-Temperature Relationship and Low Temperature Overpressure Protection System Requirements, Section XI, Division 1	January 17, 2000
N-648-1	Alternative Requirements for Inner Radius Examination of Class 1 Reactor Vessel Nozzles, Section XI Division 1	September 7, 2001
N-652	Alternative Requirements to Categories B-G-1, B-G-2, and C-D Bolting Examination Methods and Selection Criteria, Section XI, Division 1	August 14, 2001

ASME CODE CASE NUMBER	*TITLE*	*APPROVAL DATE*
N-663	Alternative Requirements for Class 1 and 2 Surface Examinations, Section XI, Division 1	September 17, 2002
N-686	Alternative Requirements for Visual Examinations, VT-1, VT-2, and VT-3, Section XI, Division 1	February 14, 2003

APPENDIX B

INSERVICE INSPECTION RELIEF REQUESTS

APPENDIX B: Inservice Inspection Relief Requests

B.1 Inservice Inspection Relief Requests

B.1.1 This section contains Relief Requests written in accordance with 10CFR50.55a(g)(5) when specific ASME Section XI requirements for inservice inspection are considered impractical. The enclosed Relief Requests are subject to change throughout the inspection interval. If examination requirements are determined to be impractical during the course of the interval, additional or modified relief requests shall be submitted in accordance with 10CFR50.55a(g)(5).

B.1.2 Exceptions to Code required examinations may also be authorized by NRR, as allowed by 10CFR50.55a (a)(3), provided that design, fabrication, installation, testing and inspection performed in compliance with Codes and Section XI requirements would result in hardship without a compensating increase in the level of quality and safety, or provided that the proposed alternative examination will assure an acceptable level of quality and safety. Specific exceptions may also be documented in the form of Relief Requests and included in this Section, as applicable.

B.1.3 On December 27, 2000 during the Third Ten-Year Interval, PNPS submitted a request to implement a risk-informed application on Class 1 piping welds. This request, which was submitted in the form of a RI-ISI template, provided alternative examination requirements that meet the criteria of 10CFR50.55a(a)(3)(i). The NRC approved the RI-ISI submittal template in an SER dated May 2, 2001. Although the RI-ISI template is technically a request for alternative which could be included in the Fourth Ten-Year Interval Inservice Inspection Plan, its complexity dictates that it remain a stand-alone document. As such, it is referenced where applicable in this Inservice Inspection Plan, but it will remain an independent document.

B.1.4 At the time this 4th Interval ISI Program Plan was developed, the revision of Regulatory Guide 1.147 (*Inservice Inspection Code Case Acceptability*) that was in effect was Revision 13. If a subsequent revision of Reg. Guide 1.147 is issued that includes Section XI Code Cases now covered in a 4th Interval relief request that have been subsequently deemed acceptable by the NRC, any such relief requests using these Code Cases may no longer be necessary. Entergy may formally request the withdrawal any such applicable relief requests.

B.1.5 Table B.1 below provides a summary listing and revision status of all Relief Requests related to inservice inspection at the Pilgrim Nuclear Power Station during the Fourth Ten-Year Interval.

TABLE B.1
4th INSERVICE INSPECTION INTERVAL RELIEF REQUEST INDEX

RELIEF REQUEST	*PAGE(S)*	*REV.*	*DATE*	*TOPIC*
PRR-1	B-5	---	---	Not Used.
PRR-2	B-6 to B-7	0	07/01/05	Alternate Criteria for Class 1 Pressure Tests of Piping, Pumps, and Valves (Category B-P, Item Nos. B15.10, B15.50, B15.60, B15.70).
PRR-3	B-8	---	---	Not Used.
PRR-4	B-9 to B-11	0	07/01/05	Relief from leakage testing of 1" and less vent and drain lines and valves. Category B-P, Items B15.50 and B15.70 require the system leakage test to include all ASME Code Class 1 components within the system boundary.

TABLE B.1
4th INSERVICE INSPECTION INTERVAL RELIEF REQUEST INDEX

RELIEF REQUEST	*PAGE(S)*	*REV.*	*DATE*	*TOPIC*
PRR-5	B-12 to B-30	0	07/01/05	Relief from Supplement 10 for examination of Category B-F dissimilar metal (DSM) welds. The Final Rule, 64 FR 51370, dated 09/22/1999, required Pilgrim to implement a program to comply with Supplement 10 by 11/22/2002. Supplement 10 contains the qualification requirements for procedures, equipment, and personnel involved with examining DSM welds using ultrasonic techniques.
PRR-6	B-31 to B-33	0	07/01/05	Use of RMS for Grading Purposes as an alternative to Appendix VIII, Supplement 4 for Examination of RPV Shell and Head welds (Examination Category B-A, Item Nos. B1.10 & B1.20).
PRR-7	B-34 to B-36	0	07/01/05	Repair/Replacement Program. Relief requested from the requirements of IWA-4400(b). All welders shall be qualified by the repair organization. Code Case N-600.
PRR-8	B-37 to B-40	0	07/01/05	Code Case N-663. Alternative to surface examination requirements of Table IWC-2500-1 for examination categories C-F-1 and C-F-2. This applies to all ISI Class 2 pressure-retaining piping welds.
PRR-9	B-41 to B-54	0	07/01/05	Relief from ASME Code Section XI, Mandatory Appendix VIII, Supplement 11 for pressure retaining piping weld overlay examination.
PRR-10	B-55 to B-60	0	07/01/05	Risk-Informed ISI (RI-ISI): Relief from Category B-F & B-J weld examinations.
PRR-11	B-61 to B-64	0	07/01/05	ASME Section XI, Class 1, Examination Category B-A, Code Item No. B1.30 requires that ultrasonic examination (UT) of reactor vessel shell-to-flange welds be conducted in accordance with Article 4 of ASME Section V, supplemented by the requirements of Table I-2000-1.
PRR-12	B-65 to B-67	0	07/01/05	Examination Category B-A Item B1.30 RPV Shell-to-Flange Weld -- defer to 3rd Period to coincide with RPV 10-Year ISI.
PRR-13	B-68 to B-73	0	07/01/05	Code Case N-613-1. Ultrasonic Examination of Full Penetration Welded Nozzles in Vessels. Reduced volume examination (Examination Category B-D, Item No. B3.90).
PRR-14	B-74 to B-83	0	07/01/05	Code Case N-652: Alternative Requirements to Categories B-G-1, B-G-2, and C-D Bolting Examination Methods and Selection Criteria.
PRR-15	B-84 to B-91	0	07/01/05	Alternative Contingency Repair Plan for Reactor Pressure Vessel Nozzle Safe-End and Dissimilar Metal Piping Welds Using ASME Code Cases N-638 and N-504-2 with Exceptions.

B.1.6 Table B.2 below provides a summary listing and revision status of all Relief Requests approved during previous Inspection Intervals that are applicable for continued use during the 4th Inspection Interval.

TABLE B.2
PREVIOUSLY APPROVED RELIEF REQUESTS APPLICABLE TO THE 4th INTERVAL

RELIEF REQUEST	*INTERVAL*	*PAGE(S)*	*REV.*	*DATE*	*TOPIC*	*EXPIRATION DATE*
PRR-28 (TAC No. MB6074)	3rd	B-92 to B-104	1	07/01/05	Alternative to the examination requirements of RPV circumferential shell welds (Item B1.10 of Examination Category B-A).	June 8, 2012
PRR-39 (TAC No. MC2496)	3rd	B-105 to B-120	2	07/01/05	Full structural weld overlay contingency repairs for the weldments associated with austenitic RPV nozzle safe-end and dissimilar metal (DM) piping welds.	June 8, 2012

B.1.7 Table B.3 below provides a summary listing and revision status of all Relief Requests submitted during previous Inspection Intervals that are still pending regulatory approval. These Relief Requests are applicable for continued use during the 4th Inspection Interval if approved.

TABLE B.3
PRIOR INTERVAL PENDING RELIEF REQUESTS APPLICABLE TO THE 4th INTERVAL

RELIEF REQUEST	*INTERVAL*	*PAGE(S)*	*REV.*	*DATE*	*TOPIC*	*EXPIRATION DATE*
None.						

B.1.8 Each individual Relief Request from Table B.1, Table B.2, and Table B.3 follows.

RELIEF REQUEST NUMBER: PRR-1

(Page 1 of 1)

NOT USED

RELIEF REQUEST NUMBER: PRR-2
REVISION 0
(Page 1 of 2)

A. COMPONENT IDENTIFICATION

Class:	1
References:	IWB-2500, Table IWB-2500-1, IWB-5220
Examination Category:	B-P
Item Numbers:	B15.10, B15.50, B15.60, B15.70
Description:	Alternate Criteria for Class 1 System Leakage Tests
Component Numbers:	All Class 1 Pressure Retaining Components

B. CODE REQUIREMENT

Table IWB-2500-1 Examination Category B-P requires the performance of a system leakage test per IWB-5220 criteria for all Class 1 pressure retaining components prior to plant startup following each reactor refueling outage.

IWB-5221(a) requires that the system leakage test be conducted at a test pressure not less than the nominal pressure associated with 100% rated reactor power.

C. REASON FOR RELIEF REQUEST

Relief is requested from the full pressure requirement of the IWB-5221(a) leakage tests on the basis of impracticality as cited in the cases below. This relief is requested under 10CFR50.55a(a)(3)(ii) in that compliance with the specified requirements would result in hardship or unusual difficulty without a compensating increase in the level of quality and safety.

D. BASIS FOR RELIEF

It is sometimes necessary to rework and examine mechanical connections after the Class 1 system leakage test has been completed. Examples include the following:

- Safety relief valve flanged connections which were blanked off for the system pressure test
- Leaking mechanical connections which were discovered during the system leakage test and reworked following depressurization
- Control rod drive mechanism repair or change out

The leakage acceptability of reworked mechanical joints is presently determined at the nominal pressure associated with approximately 5% power just prior to drywell inerting. This translates to a reactor pressure of 930 psig rather than the 1035 psig nominal pressure associated with 100% reactor power.

RELIEF REQUEST NUMBER: PRR-2
REVISION 0
(Page 2 of 2)

D. BASIS FOR RELIEF (cont'd)

Inspection inside the drywell is not feasible above 5% power because of adverse radiation and temperature levels combined with an inert atmosphere. Requiring a VT-2 visual inspection during a system pressure test at operating pressure would require Pilgrim personnel to make a full power drywell entry. In this operating mode, examiners would be subjected to adverse conditions due to radiation and high temperature levels as well as the inert atmosphere. Imposing this requirement would require special precautions such as using ice packs and cool air supply lines to perform the VT-2 visual inspections. These conditions may compromise the quality of the inspection and impose potential safety concerns and hazardous conditions for examination personnel. Examiners performing VT-2 visual inspections in a less adverse environment are more likely to be able to perform a higher quality examination and see evidence of leakage, when occurring.

Full pressure testing at 1035 psig would require an alternate method of pressurization that potentially would only have a marginal increase in leakage rates and a disproportionate impact on outage schedule. When considering the minimal increase in pressure applied to piping systems at operating pressure versus the pressure attained at 5% power, it is believed that 930 psig will result in a detectable leakage rate, if leakage is going to occur.

E. ALTERNATIVE TEST

Entergy will perform the system leakage test for the special situation mechanical joints at 930 psig. Disposition of observed leakage will consider the marginal increase in leakage rates that would occur at the nominal operating pressure associated with 100% rated reactor power.

F. IMPLEMENTATION SCHEDULE

Relief is requested for the Fourth Ten-Year Interval of the Pilgrim Station Inservice Inspection Program, beginning July 1, 2005.

G. PRECEDENTS

This proposed alternative is essentially identical to 3rd Interval Relief Request PRR-21 (TAC No. M93398).

H. ATTACHMENTS

None.

RELIEF REQUEST NUMBER: PRR-3

(Page 1 of 1)

NOT USED

RELIEF REQUEST NUMBER: PRR-4
REVISION 0
(Page 1 of 3)

A. COMPONENT IDENTIFICATION

Class:	1
References:	IWB-2500, Table IWB-2500-1, IWB-5221
Examination Category:	B-P
Item Numbers:	B15.50 (Piping) and B15.70 (Valves)
Description:	Class 1 components within the Reactor Coolant System
Component Numbers:	Reactor Coolant Pressure Boundary (RCPB) vent, drain and branch (VTDB) lines and small bore connections (≤ 1-inch).

B. CODE REQUIREMENT

ASME Section XI, 1998 Code w/2000 Addenda, Table IWB–2500-1, Examination Category B-P, Items B15.50 and B15.70 require the system leakage test to include all ASME Code Class 1 piping and valves within the Reactor Coolant System boundary.

C. REASON FOR RELIEF REQUEST

Relief is requested to perform the ASME Code Class 1 system leakage test in accordance with the requirements of the 2001 Edition of the ASME Code, 2003 Addenda, Subsection IWB-2500, Table 2500-1 for Class 1 system components, with the reactor coolant pressure boundary (RCPB) vent, drain, and branch (VTDB) lines and connections in the normally closed position. This relief is requested under 10CFR50.55a(a)(3)(i) in that the proposed alternative would provide an acceptable level of quality and safety.

D. BASIS FOR RELIEF

The 2001 Edition, including the 2003 Addenda of the ASME Section XI Code has been incorporated into 10CFR50.55a(b) by reference (10CFR50.55a(b), 69 FR 58819, dated October 1, 2004). Table IWB-2500-1 of the 2003 Addenda requires a system leakage test at the end of each refueling outage (including the last one at or near the end of the interval) in accordance with requirements of IWB-5220. Subsection IWB-5220, Subparagraph IWB-5222(b) states that "The pressure retaining boundary during the system leakage test conducted at or near the end of each inspection interval shall extend to all Class 1 pressure retaining components within the system boundary".

The VTDB lines and connections are equipped with manual valves, which provide double isolation of the RCPB. These valves are generally maintained closed during normal operation. The piping outboard of the first isolation valve is not normally pressurized. Under normal operating conditions, the VTDB lines and connections see reactor coolant system pressures and temperatures only if leakage through the inboard valves occurs. To perform the Code-required test, it would be necessary to manually open the inboard valves to pressurize the VTDB lines and connections. Pressurization by this method defeats the double isolation and potentially presents safety concerns for the personnel performing the test.

RELIEF REQUEST NUMBER: PRR-4
REVISION 0
(Page 2 of 3)

D. BASIS FOR RELIEF (cont'd)

Furthermore, performing the test with the inboard isolation valves open requires several man-hours to position the valves for the test and restore the valves after the test is complete. These valves are located in close proximity of the RCPB main steam loop piping and thus require personnel entry into high radiation areas within the containment. Based on previous outage data, estimated radiation exposure associated with valve alignment and realignment would be approximately 1 man-Rem per test. Since this test would be performed near the end of an outage when all RCPB work has been completed, the time required to open and close these VTDB lines and connections would impact the outage schedule. Thus, compliance with this specific Code requirement results in unnecessary hardship pursuant to 10CFR50.55a(a)(3)(ii) without a sufficient compensating increases in the level of quality and safety.

The proposed alternative provides an acceptable level of safety and quality based on the following:

1. The non-isolable portion of the RCPB VTDB lines and connections will be pressurized and visually examined as required. Only the isolable portion of those small diameter VTDB lines and connections will not be pressurized.

2. A typical VTDB line and connection includes two manual valves separated by a short pipe nipple, which is connected to the RCPB via another short pipe nipple and a half coupling. All connections are typically socket-welded and the welds receive a surface examination after installation. The piping and valves are normally heavy wall (Sch. 160 pipe and 600# valve bodies). The VTDB lines and connections are not subject to high stresses or cyclic loads and design ratings are significantly greater than RCPB operating or design pressure.

3. PNPS Technical Specifications (TS) LCOs 3.2.E and 3.6.C and associated Surveillance Requirements and 4.2.E and 4.6.C require Drywell and RCPB leakage monitoring during normal operation. Should TS limits be exceeded appropriate corrective actions, which may include shutting the plant down, are required to identify the source of leakage and restore the integrity of the RCPB boundary.

E. ALTERNATIVE TEST

A system leakage test of the Class 1 systems and components will be performed prior to plant startup following each refueling outage, in accordance with ASME Section XI Code, 2001 Edition, 2003 Addenda, Table IWB-2500-1 and IWB-5220 requirements, with the exception that the RCPB VTDB lines and connections will be visually examined for leakage and any evidence of past leakage, with the isolation valves in the normally closed position.

The RCPB VTDB lines and connections will be visually examined with the isolation valves in the normally closed position during the 10-year Inservice Inspection System Leakage Test. This examination will be performed at nominal operating pressure associated with 100% reactor power after satisfying the required 4-hour hold time.

RELIEF REQUEST NUMBER: PRR-4
REVISION 0
(Page 3 of 3)

E. ALTERNATIVE TEST (cont'd)

The above-proposed alternative provides an acceptable level of quality and safety.

F. IMPLEMENTATION SCHEDULE

Relief is requested for the Fourth Ten-Year Interval of the Pilgrim Station Inservice Inspection Program, beginning July 1, 2005.

G. PRECEDENTS

This proposed alternative is essentially identical to 3rd Interval Relief Request PRR-29 (TAC No. MC1472).

H. ATTACHMENTS

None.

RELIEF REQUEST NUMBER: PRR-5
REVISION 0
(Page 1 of 19)

A. COMPONENT IDENTIFICATION

Class:	1
References:	IWB-2500-1
Examination Category:	B-F
Description:	Alternative Requirements to ASME Section XI, Appendix VIII, Supplement 10 for Examination of Dissimilar Metal (DSM) Welds in Vessel Nozzles
Component Numbers:	Pressure Retaining Dissimilar Metal Welds in Vessel Nozzles subject to ultrasonic examination using procedures, personnel, and equipment qualified to ASME Section XI, Appendix VIII, Supplement 10 criteria.

B. CODE REQUIREMENT

The following paragraphs or statements are from ASME 1998 Code w/2000 Addenda, Section XI, Appendix VIII, Supplement 10 and identify the specific requirements that are included in this request for relief.

Item 1 - Paragraph 1.1(b) states in part - Pipe diameters within a range of 0.9 to 1.5 times a nominal diameter shall be considered equivalent.

Item 2 - Paragraph 1.1(d) states - All flaws in the specimen set shall be cracks.

Item 3 - Paragraph 1.1(d)(1) states - At least 50% of the cracks shall be in austenitic material. At least 50% of the cracks in austenitic material shall be contained wholly in weld or buttering material. At least 10% of the cracks shall be in Ferritic material. The remainder of the cracks may be in either austenitic or Ferritic material.

Item 4 - Paragraph 1.2(b) states in part - The number of unflawed grading units shall be at least twice the number of flawed grading units.

Item 5 - Paragraph 1.2(c)(1) and 1.3(c) state in part - At least 1/3 of the flaws, rounded to the next higher whole number, shall have depths between 10% and 30% of the nominal pipe wall thickness. Paragraph 1.4(b) distribution table requires 20% of the flaws to have depths between 10% and 30%.

Item 6 - Paragraph 2.0 first sentence states - The specimen inside surface and identification shall be concealed from the candidate.

Item 7 - Paragraph 2.2(b) states in part - The regions containing a flaw to be sized shall be identified to the candidate.

B. CODE REQUIREMENT (cont'd)

Item 8 - Paragraph 2.2(c) states in part - For a separate length-sizing test, the regions of each specimen containing a flaw to be sized shall be identified to the candidate.

Item 9 - Paragraph 2.3 states in part - For the depth sizing test, 80% of the flaws shall be sized at a specific location on the surface of the specimen identified to the candidate.

Item 10 - Paragraph 2.3 states in part - For the remaining flaws, the regions of each specimen containing a flaw to be sized shall be identified to the candidate. The candidate shall determine the maximum depth of the flaw in each region.

Item 11 - Table VIII-S2-1 provides the false call criteria when the number of unflawed grading units is at least twice the number of flawed grading units.

C. REASON FOR RELIEF REQUEST

Relief is requested to use the following alternative requirements for implementation of Appendix VIII, Supplement 10 requirements. They will be implemented through the PDI Program. This relief is requested under 10CFR50.55a(a)(3)(i) in that the proposed alternatives would provide an acceptable level of quality and safety.

A copy of the proposed revision to Supplement 10 is attached. It identifies the proposed alternatives and allows them to be viewed in context. It also identifies additional clarifications and enhancements for information. It has been submitted to the ASME Code for consideration and as of September 2002 has been approved by the NDE Subcommittee.

D. BASIS FOR RELIEF

Item 1 - The proposed alternative to Paragraph 1.1(b) is:

"The specimen set shall include the minimum and maximum pipe diameters and thicknesses for which the examination procedure is applicable. Pipe diameters within a range of 1/2 in. (13 mm) of the nominal diameter shall be considered equivalent. Pipe diameters larger than 24 in. (610 mm) shall be considered to be flat. When a range of thicknesses is to be examined, a thickness tolerance of ±25% is acceptable."

Technical Basis - The change in the minimum pipe diameter tolerance from 0.9 times the diameter to the nominal diameter minus 0.5 inch provides tolerances more in line with industry practice. Though the alternative is less stringent for small pipe diameters they typically have a thinner wall thickness than larger diameter piping. A thinner wall thickness results in shorter sound path distances that reduce the detrimental effects of the curvature. This change maintains consistency between Supplement 10 and the recent revision to Supplement 2.

RELIEF REQUEST NUMBER: PRR-5
REVISION 0
(Page 3 of 19)

D. BASIS FOR RELIEF (cont'd)

Item 2 - The proposed alternative to Paragraph 1.1(d) is:

"At least 60% of the flaws shall be cracks, the remainder shall be alternative flaws. Specimens with IGSCC shall be used when available. Alternative flaws, if used, shall provide crack-like reflective characteristics and shall be limited to the case where implantation of cracks produces spurious reflectors that are uncharacteristic of actual flaws.

Alternative flaw mechanisms shall have a tip width of less than or equal to 0.002 in. (.05 mm). Note, to avoid confusion the proposed alternative modifies instances of the term "cracks" or "cracking" to the term "flaws" because of the use of alternative flaw mechanisms."

Technical Basis - As illustrated below, implanting a crack requires excavation of the base material on at least one side of the flaw. While this may be satisfactory for ferritic materials, it does not produce a useable axial flaw in austenitic materials because the sound beam, which normally passes only through base material, must now travel through weld material on at least one side, producing an unrealistic flaw response. In addition, it is important to preserve the dendritic structure present in field welds that would otherwise be destroyed by the implantation process. To resolve these issues, the proposed alternative allows the use of up to 40% fabricated flaws as an alternative flaw mechanism under controlled conditions. The fabricated flaws are isostatically compressed which produces ultrasonic reflective characteristics similar to tight cracks.

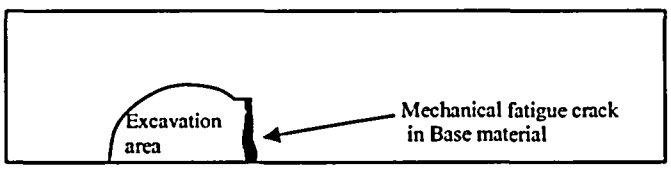

Item 3 - The proposed alternative to Paragraph 1.1(d)(1) is:

"At least 80% of the flaws shall be contained wholly in weld or buttering material. At least one and a maximum of 10% of the flaws shall be in ferritic base material. At least one and a maximum of 10% of the flaws shall be in austenitic base material."

Technical Basis - Under the current Code, as few as 25% of the flaws are contained in austenitic weld or buttering material. Recent experience has indicated that flaws contained within the weld are the likely scenarios. The metallurgical structure of austenitic weld material is ultrasonically more challenging than either ferritic or austenitic base material. The proposed alternative is therefore more challenging than the current Code.

RELIEF REQUEST NUMBER: PRR-5
REVISION 0
(Page 4 of 19)

D. BASIS FOR RELIEF (cont'd)

Item 4 - The proposed alternative to Paragraph 1.2(b) is:

"Detection sets shall be selected from Table VIII-S10-1. The number of unflawed grading units shall be at least one and a half times the number of flawed grading units."

Technical Basis - Table VIII-S10-1 provides a statistically based ratio between the number of unflawed grading units and the number of flawed grading units. The proposed alternative reduces the ratio to 1.5 times. This reduces the number of test samples to a more reasonable number from the human factors perspective. However, the statistical basis used for screening personnel and procedures is still maintained at the same level with competent personnel being successful and less skilled personnel being unsuccessful. The acceptance criteria for the statistical basis are in Table VIII-S10-1.

Item 5 - The proposed alternative to the flaw distribution requirements of Paragraph 1.2(c)(1) (detection) and 1.3(c) (length) is to use the Paragraph 1.4(b) (depth) distribution table (see below) for all qualifications.

Flaw Depth (% Wall Thickness)	Minimum Number of Flaws
10-30%	20%
31-60%	20%
61-100%	20%

Technical Basis - The proposed alternative uses the depth sizing distribution for both detection and depth sizing because it provides for a better distribution of flaw sizes within the test set. This distribution allows candidates to perform detection, length, and Depth-sizing demonstrations simultaneously utilizing the same test set. The requirement that at least 75% of the flaws shall be in the range of 10 to 60% of wall thickness provides an overall distribution tolerance. The distribution uncertainty decreases the possibilities for testmanship that would be inherent to a uniform distribution. It must be noted that it is possible to achieve the same distribution utilizing the present requirements, but it is preferable to make the criteria consistent.

D. BASIS FOR RELIEF (cont'd)

Item 6 - The proposed alternative to Paragraph 2.0 first sentence is:

"For qualifications from the outside surface, the specimen inside surface and identification shall be concealed from the candidate. When qualifications are performed from the inside surface, the flaw location and specimen identification shall be obscured to maintain a "blind test"."

This proposed alternative is applicable to PWRs and therefore, not applicable to Pilgrim.

Items 7 and 8 - The proposed alternatives to Paragraph 2.2(b) and 2.2(c) is:

"The regions containing a flaw to be sized *may* be identified to the candidate."

Technical Basis - The current Code requires that the regions of each specimen containing a flaw to be length sized shall be identified to the candidate. The candidate shall determine the length of the flaw in each region (Note, that length and depth sizing use the term "regions" while detection uses the term "grading units" - the two terms define different concepts and are not intended to be equal or interchangeable). To ensure security of the samples, the proposed alternative modifies the first "shall" to a "may" to allow the test administrator the option of not identifying specifically where a flaw is located. This is consistent with the recent revision to Supplement 2.

Items 9 and 10 - The proposed alternative to Paragraph 2.3(a) and 2.3(b) is:

"... the regions of each specimen containing a flaw to be sized *may* be identified to the candidate."

Technical Basis - The current Code requires that a large number of flaws be sized at a specific location. The proposed alternative changes the "shall" to a "may" which modifies this from a specific area to a more generalized region to ensure security of samples. This is consistent with the recent revision to Supplement 2. It also incorporates terminology from length sizing for additional clarity.

Item 11 - The proposed alternative modifies the acceptance criteria of Table VIII-S2-1 as follows:

D. BASIS FOR RELIEF (cont'd)

TABLE VIII-S2-1
PERFORMANCE DEMONSTRATION DETECTION TEST
ACCEPTANCE CRITERIA

Detection Test Acceptance Critera		False Call Test Acceptance Criteria	
No. of Flawed Grading Units	Minimum Detection Criteria	No. of Unflawed Grading Units	Maximum Number of False Calls
5	5	10	0
6	6	12	1
7	6	14	1
8	7	16	2
9	7	18	2
10	8	20 15	3 2
11	9	22 17	3 3
12	9	24 18	3 3
13	10	26 20	4 3
14	10	28 21	5 3
15	11	30 23	5 3
16	12	32 24	6 4
17	12	34 26	6 4
18	13	36 27	7 4
19	13	38	7
20	14	40 20	8 4

Technical Basis - The proposed alternative is identified as new Table S10-1 above. It was modified to reflect the reduced number of unflawed grading units and allowable false calls. As a part of ongoing Code activities, PNNL has reviewed the statistical significance of these revisions and offered the revised Table S10-1.

Pursuant to 10 CFR 50.55a(a)(3)(i), approval is requested to use the proposed alternatives described above in lieu of the ASME Section XI, Appendix VIII, Supplement 10 requirements. Compliance with the proposed alternatives will provide an adequate level of quality and safety for examination of the affected welds.

E. ALTERNATE EXAMINATIONS OR TESTS

In lieu of the requirements of ASME Section XI, 1998 Edition, 2000 Addenda, Appendix VIII, Supplement 10, the proposed alternative shall be used. The proposed alternative is described in the enclosure.

F. IMPLEMENTATION SCHEDULE

Relief is requested for the Fourth Ten-Year Interval of the Pilgrim Station Inservice Inspection Program, beginning July 1, 2005.

G. PRECEDENTS

This proposed alternative is essentially identical to the model provided by the Performance Demonstration Initiative (PDI) on the EPRI Website and to PNPS 3rd Interval Relief Request PRR-30 (TAC No. MB7949). The NRC has also granted similar relief to Entergy's Vermont Yankee Station (TAC No. MB8352).

H. ATTACHMENTS

A copy of the proposed revision to Supplement 10 is attached. It identifies the proposed alternatives and allows them to be viewed in context. It also identifies additional clarifications and enhancements for information. It has been submitted to the ASME Code for consideration and as of December 2002 has been approved by the NDE Subcommittee.

RELIEF REQUEST NUMBER: PRR-5
REVISION 0
(Page 8 of 19)

SUPPLEMENT 10 – QUALIFICATION REQUIREMENTS FOR DISSIMILAR METAL PIPING WELDS		
Current Requirement	**Proposed Change**	**Reasoning**
	1.0 SCOPE	
	Supplement 10 is applicable to dissimilar metal piping welds examined from either the inside or outside surface. Supplement 10 is not applicable to piping welds containing supplemental corrosion resistant clad (CRC) applied to mitigate Intergranular Stress Corrosion Cracking (IGSCC).	A scope statement provides added clarity regarding the applicable range of each individual Supplement. The exclusion of CRC provides consistency between Supplement 10 and the recent revision to Supplement 2 (Reference BC 00-755). Note, an additional change identifying CRC as "in course of preparation" is being processed separately.
1.0 SPECIMEN REQUIREMENTS	2.0 SPECIMEN REQUIREMENTS	Renumbered
Qualification test specimens shall meet the requirements listed herein, unless a set of specimens is designed to accommodate specific limitations stated in the scope of the examination procedure (e.g., pipe size, weld joint configuration, access limitations). The same specimens may be used to demonstrate both detection and sizing qualification.	Qualification test specimens shall meet the requirements listed herein, unless a set of specimens is designed to accommodate specific limitations stated in the scope of the examination procedure (e.g., pipe size, weld joint configuration, access limitations). The same specimens may be used to demonstrate both detection and sizing qualification.	No Change
1.1 General. The specimen set shall conform to the following requirements.	2.1 General. The specimen set shall conform to the following requirements.	Renumbered
	(a) The minimum number of flaws in a test set shall be ten.	New, changed minimum number of flaws to 10 so sample set size for detection is consistent with length and depth sizing.
(a) Specimens shall have sufficient volume to minimize spurious reflections that may interfere with the interpretation process.	(b) Specimens shall have sufficient volume to minimize spurious reflections that may interfere with the interpretation process.	Renumbered

RELIEF REQUEST NUMBER: PRR-5
REVISION 0
(Page 9 of 19)

SUPPLEMENT 10 – QUALIFICATION REQUIREMENTS FOR DISSIMILAR METAL PIPING WELDS		
Current Requirement	**Proposed Change**	**Reasoning**
(b) The specimen set shall include the minimum and maximum pipe diameters and thicknesses for which the examination procedure is applicable. Pipe diameters within a range of 0.9 to 1.5 times a nominal diameter shall be considered equivalent. Pipe diameters larger than 24 in. shall be considered to be flat. When a range of thicknesses is to be examined, a thickness tolerance of ±25% is acceptable.	(c) The specimen set shall include the minimum and maximum pipe diameters and thicknesses for which the examination procedure is applicable. Pipe diameters within a range of 1/2 in. (13 mm) of the nominal diameter shall be considered equivalent. Pipe diameters larger than 24 in. (610 mm) shall be considered to be flat. When a range of thicknesses is to be examined, a thickness tolerance of ±25% is acceptable.	Renumbered, metricated, the change in pipe diameter tolerance provides consistency between Supplement 10 and the recent revision to Supplement 2 (Reference BC 00-755)
(c) The specimen set shall include examples of the following fabrication condition:	(d) The specimen set shall include examples of the following fabrication conditions:	Renumbered, changed "condition" to "conditions"
(1) geometric conditions that normally require discrimination from flaws (e.g., counterbore or weld root conditions, cladding, weld buttering, remnants of previous welds, adjacent welds in close proximity);	(1) geometric and material conditions that normally require discrimination from flaws (e.g., counterbore or weld root conditions, cladding, weld buttering, remnants of previous welds, adjacent welds in close proximity, and weld repair areas);	Clarification, some of the items listed relate to material conditions rather than geometric conditions. Weld repair areas were added as a result of recent field experiences.
(2) typical limited scanning surface conditions (e.g., diametrical shrink, single-side access due to nozzle and safe end external tapers).	(2) typical limited scanning surface conditions (e.g., weld crowns, diametrical shrink, single-side access due to nozzle and safe end external tapers for outside surface examinations; and internal tapers, exposed weld roots, and cladding conditions for inside surface examinations). Qualification requirements shall be satisfied separately for outside surface and inside surface examinations.	Differentiates between ID and OD scanning surface limitations. Requires that ID and OD qualifications be conducted independently (Note, new paragraph 2.0 (identical to old paragraph 1.0) provides for alternatives when "a set of specimens is designed to accommodate specific limitations stated in the scope of the examination procedure.").
(d) All flaws in the specimen set shall be cracks.		Deleted this requirement, because new paragraph 2.3 below provides for the use of "alternative flaws" in lieu of cracks.

RELIEF REQUEST NUMBER: PRR-5
REVISION 0
(Page 10 of 19)

SUPPLEMENT 10 – QUALIFICATION REQUIREMENTS FOR DISSIMILAR METAL PIPING WELDS		
Current Requirement	**Proposed Change**	**Reasoning**
(1) At least 50% of the cracks shall be in austenitic material. At least 50% of the cracks in austenitic material shall be contained wholly in weld or buttering material. At least 10% of the cracks shall be in ferritic material. The remainder of the cracks may be in either austenitic or ferritic material.	2.2 Flaw Location. At least 80% of the flaws shall be contained wholly in weld or buttering material. At least one and a maximum of 10% of the flaws shall be in ferritic base material. At least one and a maximum of 10% of the flaws shall be in austenitic base material.	Renumbered and re-titled. Flaw location percentages redistributed because field experience indicates that flaws contained in weld or buttering material are probable and represent the more stringent ultrasonic detection scenario.
(2) At least 50% of the cracks in austenitic base material shall be either IGSCC or thermal fatigue cracks. At least 50% of the cracks in ferritic material shall be mechanically or thermally induced fatigue cracks.	2.3 Flaw Type. (a) At least 60% of the flaws shall be cracks, the remainder shall be alternative flaws. Specimens with IGSCC shall be used when available. Alternative flaws, if used, shall provide crack-like reflective characteristics and shall be limited to the case where implantation of cracks produces spurious reflectors that are uncharacteristic of actual flaws. Alternative flaw mechanisms shall have a tip width of less than or equal to 0.002 in. (.05 mm).	Renumbered and re-titled. Alternative flaws are required for placing axial flaws in the HAZ of the weld and other areas where implantation of a crack produces metallurgical conditions that result in an unrealistic ultrasonic response. This is consistent with the recent revision to Supplement 2 (Reference BC 00-755). The 40% limit on alternative flaws is needed to support the requirement for up to 70% axial flaws. Metricated
(3) At least 50% of the cracks shall be coincident with areas described in (c) above.	(b) At least 50% of the flaws shall be coincident with areas described in 2.1(d) above.	Renumbered. Due to inclusion of "alternative flaws", use of "cracks" is no longer appropriate.

RELIEF REQUEST NUMBER: PRR-5
REVISION 0
(Page 11 of 19)

SUPPLEMENT 10 – QUALIFICATION REQUIREMENTS FOR DISSIMILAR METAL PIPING WELDS		
Current Requirement	**Proposed Change**	**Reasoning**
	2.4 Flaw Depth. All flaw depths shall be greater than 10% of the nominal pipe wall thickness. Flaw depths shall exceed the nominal clad thickness when placed in cladding. Flaws in the sample set shall be distributed as follows: Flaw Depth (% Wall Thickness) — Minimum Number of Flaws 10-30% — 20% 31-60% — 20% 61-100% — 20% At least 75% of the flaws shall be in the range of 10 to 60% of wall thickness.	Moved from old paragraph 1.3(c) and 1.4 and re-titled. Consistency between detection and sizing specimen set requirements (e.g., 20% vs. 1/3 flaw depth increments, e.g., original paragraph 1.3(c))
1.2 Detection Specimens. The specimen set shall include detection specimens that meet the following requirements.		Renumbered and re-titled and moved to paragraph 3.1(a). No other changes
(a) Specimens shall be divided into grading units. Each grading unit shall include at least 3 in. of weld length. If a grading unit is designed to be unflawed, at least 1 in. of unflawed material shall exist on either side of the grading unit. The segment of weld length used in one grading unit shall not be used in another grading unit. Grading units need not be uniformly spaced around the pipe specimen.		Renumbered to paragraph 3.1(a)(1). No other changes.

RELIEF REQUEST NUMBER: PRR-5
REVISION 0
(Page 12 of 19)

SUPPLEMENT 10 – QUALIFICATION REQUIREMENTS FOR DISSIMILAR METAL PIPING WELDS		
Current Requirement	**Proposed Change**	**Reasoning**
(b) Detection sets shall be selected from Table VIII-S2-1. The number of unflawed grading units shall be at least twice the number of flawed grading units.		Moved to new paragraph 3.1(a)(2).
(c) Flawed grading units shall meet the following criteria for flaw depth, orientation, and type.		Flaw depth requirements moved to new paragraph 2.4, flaw orientation requirements moved to new paragraph 2.5, flaw type requirements moved to new paragraph 2.3, "Flaw Type".
(1) All flaw depths shall be greater than 10% of the nominal pipe wall thickness. At least 1/3 of the flaws, rounded to the next higher whole number, shall have depths between 10% and 30% of the nominal pipe wall thickness. However, flaw depths shall exceed the nominal clad thickness when placed in cladding. At least 1/3 of the flaws, rounded to the next whole number, shall have depths greater than 30% of the nominal pipe wall thickness.		Deleted, for consistency in sample sets the depth distribution is the same for detection and sizing.
(2) At least 30% and no more than 70% of the flaws, rounded to the next higher whole number, shall be oriented axially. The remainder of the flaws shall be oriented circumferentially.	2.5 Flaw Orientation. (a) At least 30% and no more than 70% of the flaws, rounded to the next higher whole number, shall be oriented axially. The remainder of the flaws shall be oriented circumferentially.	Note, this distribution is applicable for detection and depth sizing. Paragraph 2.5(b)(1) requires that all length- sizing flaws be oriented circumferentially.
1.3 Length Sizing Specimens. The specimen set shall include length-sizing specimens that meet the following requirements.		Renumbered and re-titled and moved to new paragraph 3.2

RELIEF REQUEST NUMBER: PRR-5
REVISION 0
(Page 13 of 19)

SUPPLEMENT 10 – QUALIFICATION REQUIREMENTS FOR DISSIMILAR METAL PIPING WELDS		
Current Requirement	**Proposed Change**	**Reasoning**
(a) All length sizing flaws shall be oriented circumferentially.		Moved, included in new paragraph 3.2(a)
(b) The minimum number of flaws shall be ten.		Moved, included in new paragraph 2.1 above
(c) All flaw depths shall be greater than 10% of the nominal pipe wall thickness. At least 1/3 of the flaws, rounded to the next higher whole number, shall have depths between 10% and 30% of the nominal pipe wall thickness. However, flaw depth shall exceed the nominal clad thickness when placed in cladding. At least 1/3 of the flaws, rounded to the next whole number, shall have depths greater than 30% of the nominal pipe wall thickness.		Moved, included in new paragraph 2.4 above after revision for consistency with detection distribution
1.4 Depth Sizing Specimens. The specimen set shall include depth-sizing specimens that meet the following requirements.		Moved, included in new paragraphs 2.1, 2.3, 2.4
(a) The minimum number of flaws shall be ten.		Moved, included in new paragraph 2.1

RELIEF REQUEST NUMBER: PRR-5
REVISION 0
(Page 14 of 19)

SUPPLEMENT 10 – QUALIFICATION REQUIREMENTS FOR DISSIMILAR METAL PIPING WELDS		
Current Requirement	**Proposed Change**	**Reasoning**
(b) Flaws in the sample set shall not be wholly contained within cladding and shall be distributed as follows:		Moved, potential conflict with old paragraph 1.2(c)(1); "However, flaw depths shall exceed the nominal clad thickness when placed in cladding." Revised for clarity and included in new paragraph 2.4
Flaw Depth (% Wall Thickness) / Minimum Number of Flaws 10-30% / 20% 31-60% / 20% 61-100% / 20% The remaining flaws shall be in any of the above categories.		Moved, included in paragraph 2.4 for consistent applicability to detection and sizing samples.
	(b) Sizing Specimen sets shall meet the following requirements.	Added for clarity
	(1) All length-sizing flaws shall be oriented circumferentially.	Moved from old paragraph 1.3(a)
	(2) Depth sizing flaws shall be oriented as in 2.5(a).	Included for clarity. Previously addressed by omission (i.e., length, but not depth had a specific exclusionary statement)

RELIEF REQUEST NUMBER: PRR-5
REVISION 0
(Page 15 of 19)

SUPPLEMENT 10 – QUALIFICATION REQUIREMENTS FOR DISSIMILAR METAL PIPING WELDS		
Current Requirement	**Proposed Change**	**Reasoning**
2.0 CONDUCT OF PERFORMANCE DEMONSTRATION	3.0 CONDUCT OF PERFORMANCE DEMONSTRATION	Renumbered
The specimen inside surface and identification shall be concealed from the candidate. All examinations shall be completed prior to grading the results and presenting the results to the candidate. Divulgence of particular specimen results or candidate viewing of unmasked specimens after the performance demonstration is prohibited.	For qualifications from the outside surface, the specimen inside surface and identification shall be concealed from the candidate. When qualifications are performed from the inside surface, the flaw location and specimen identification shall be obscured to maintain a "blind test". All examinations shall be completed prior to grading the results and presenting the results to the candidate. Divulgence of particular specimen results or candidate viewing of unmasked specimens after the performance demonstration is prohibited.	Differentiate between qualifications conducted from the outside and inside surface.
2.1 Detection Test. Flawed and unflawed grading units shall be randomly mixed	3.1 Detection Qualification.	Renumbered, moved text to paragraph 3.1(a)(3)
	(a) The specimen set shall include detection specimens that meet the following requirements.	Renumbered, moved from old paragraph 1.2.

RELIEF REQUEST NUMBER: PRR-5
REVISION 0
(Page 16 of 19)

SUPPLEMENT 10 – QUALIFICATION REQUIREMENTS FOR DISSIMILAR METAL PIPING WELDS		
Current Requirement	**Proposed Change**	**Reasoning**
	(1) Specimens shall be divided into grading units. Each grading unit shall include at least 3 in. (76 mm) of weld length. If a grading unit is designed to be unflawed, at least 1 in. (25 mm) of unflawed material shall exist on either side of the grading unit. The segment of weld length used in one grading unit shall not be used in another grading unit. Grading units need not be uniformly spaced around the pipe specimen.	Renumbered, moved from old paragraph 1.2(a). Metricated. No other changes.
	(2) Detection sets shall be selected from Table VIII-S10-1. The number of unflawed grading units shall be at least one and a half times the number of flawed grading units.	Moved from old paragraph 1.2(b). Table revised to reflect a change in the minimum sample set to 10 and the application of equivalent statistical false call parameters to the reduction in unflawed grading units. Human factors due to large sample size.
	(3) flawed and unflawed grading units shall be randomly mixed.	Moved from old paragraph 2.1
	(b) Examination equipment and personnel are qualified for detection when personnel demonstrations satisfy the acceptance criteria of Table VIII S10-1 for both detection and false calls.	Moved from old paragraph 3.1. Modified to reflect the 100% detection acceptance criteria of procedures versus personnel and equipment contained in new paragraph 4.0 and the use of 1.5X rather than 2X unflawed grading units contained in new paragraph 3.1(a)(2). Note, the modified table maintains the screening criteria of the original Table VIII-S2-1.

RELIEF REQUEST NUMBER: PRR-5
REVISION 0
(Page 17 of 19)

SUPPLEMENT 10 – QUALIFICATION REQUIREMENTS FOR DISSIMILAR METAL PIPING WELDS		
Current Requirement	**Proposed Change**	**Reasoning**
2.2 Length Sizing Test	3.2 Length Sizing Test	Renumbered
(a) The length-sizing test may be conducted separately or in conjunction with the detection test.	(a) Each reported circumferential flaw in the detection test shall be length sized.	Provides consistency between Supplement 10 and the recent revision to Supplement 2 (Reference BC 00-755).
(b) When the length-sizing test is conducted in conjunction with the detection test, and less than ten circumferential flaws are detected, additional specimens shall be provided to the candidate such that at least ten flaws are sized. The regions containing a flaw to be sized shall be identified to the candidate. The candidate shall determine the length of the flaw in each region.	(b) When the length-sizing test is conducted in conjunction with the detection test, and less than ten circumferential flaws are detected, additional specimens shall be provided to the candidate such that at least ten flaws are sized. The regions containing a flaw to be sized may be identified to the candidate. The candidate shall determine the length of the flaw in each region.	Change made to ensure security of samples, consistent with the recent revision to Supplement 2 (Reference BC 00-755). Note, length and depth sizing use the term "regions" while detection uses the term "grading units". The two terms define different concepts and are not intended to be equal or interchangeable.
(c) For a separate length-sizing test, the regions of each specimen containing a flaw to be sized shall be identified to the candidate. The candidate shall determine the length of the flaw in each region.	(c) For a separate length-sizing test, the regions of each specimen containing a flaw to be sized may be identified to the candidate. The candidate shall determine the length of the flaw in each region.	Change made to ensure security of samples, consistent with the recent revision to Supplement 2 (Reference BC 00-755).
	(d) Examination procedures, equipment, and personnel are qualified for length sizing when the RMS error of the flaw length measurements, as compared to the true flaw lengths, is less than or equal to 0.75 in. (19 mm).	Moved from old paragraph 3.2(a) includes inclusion of "when" as an editorial change. Metricated.
2.3 Depth Sizing Test	3.3 Depth Sizing Test	Renumbered

RELIEF REQUEST NUMBER: PRR-5
REVISION 0
(Page 18 of 19)

SUPPLEMENT 10 – QUALIFICATION REQUIREMENTS FOR DISSIMILAR METAL PIPING WELDS		
Current Requirement	**Proposed Change**	**Reasoning**
(a) For the depth-sizing test, 80% of the flaws shall be sized at a specific location on the surface of the specimen identified to the candidate.	(a) The depth-sizing test may be conducted separately or in conjunction with the detection test. For a separate depth-sizing test, the regions of each specimen containing a flaw to be sized may be identified to the candidate. The candidate shall determine the maximum depth of the flaw in each region.	Change made to ensure security of samples, consistent with the recent revision to Supplement 2 (Reference BC 00-755).
(b) For the remaining flaws, the regions of each specimen containing a flaw to be sized shall be identified to the candidate. The candidate shall determine the maximum depth of the flaw in each region.	(b) When the depth-sizing test is conducted in conjunction with the detection test, and less than ten flaws are detected, additional specimens shall be provided to the candidate such that at least ten flaws are sized. The regions of each specimen containing a flaw to be sized may be identified to the candidate. The candidate shall determine the maximum depth of the flaw in each region.	Change made to be consistent with the recent revision to Supplement 2 (Reference BC 00-755). Changes made to ensure security of samples, consistent with the recent revision to Supplement 2 (Reference BC 00-755).
	(c) Examination procedures, equipment, and personnel are qualified for depth sizing when the RMS error of the flaw depth measurements, as compared to the true flaw depths, is less than or equal to 0.125 in. (3 mm).	Moved from old paragraph 3.2(b). Metricated.
3.0 ACCEPTANCE CRITERIA		Delete as a separate category. Moved to new paragraph detection (3.1) and sizing 3.2 and 3.3
3.1 Detection Acceptance Criteria. Examination procedures, equipment, and personnel are qualified for detection when the results of the performance demonstration satisfy the acceptance criteria of Table VIII-S2-1 for both detection and false calls.		Moved to new paragraph 3.1(b), reference changed to Table S10 from S2 because of the change in the minimum number of flaws and the reduction in unflawed grading units from 2X to 1.5X.

RELIEF REQUEST NUMBER: PRR-5
REVISION 0
(Page 19 of 19)

SUPPLEMENT 10 – QUALIFICATION REQUIREMENTS FOR DISSIMILAR METAL PIPING WELDS		
Current Requirement	**Proposed Change**	**Reasoning**
3.2 Sizing Acceptance Criteria		Deleted as a separate category. Moved to new paragraph on length 3.2 and depth 3.3
(a) Examination procedures, equipment, and personnel are qualified for length sizing the RMS error of the flaw length measurements, as compared to the true flaw lengths, is less than or equal to 0.75 inch.		Moved to new paragraph 3.2(d), included word "when" as an editorial change.
(b) Examination procedures, equipment, and personnel are qualified for depth sizing when the RMS error of the flaw depth measurements, as compared to the true flaw depths, is less than or equal to 0.125 in.		Moved to new paragraph 3.3(c)
	4.0 PROCEDURE QUALIFICATION	New
	Procedure qualifications shall include the following additional requirements. (a) The specimen set shall include the equivalent of at least three personnel sets. Successful personnel demonstrations may be combined to satisfy these requirements. (b) Detectability of all flaws within the scope of the procedure shall be demonstrated. Length and depth sizing shall meet the requirements of paragraph 3.2 and 3.3. (c) At least one successful personnel demonstration has been performed. (d) To qualify new values of essential variables, at least one personnel qualification set is required.	New. Based on experience gained in conducting qualifications, the equivalent of 3 personnel sets (i.e., a minimum of 30 flaws) is required to provide enough flaws to adequately test the capabilities of the procedure. Combining successful demonstrations allows a variety of examiners to be used to qualify the procedure. Detectability of each flaw within the scope of the procedure is required to ensure an acceptable personnel pass rate. The last sentence is equivalent to the previous requirements and is satisfactory for expanding the essential variables of a previously qualified procedure

RELIEF REQUEST NUMBER: PRR-6
REVISION 0
(Page 1 of 3)

A. COMPONENT IDENTIFICATION

Class:	1
References:	IWB-2500-1
Examination Category:	B-A
Item Numbers:	B1.10: RPV Circumferential (B1.11) and Longitudinal (B1.12) Shell Welds B1.20: RPV Circumferential (B1.21) and Meridional (B1.22) Head Welds
Description:	Use of RMS for Grading Purposes as an alternative to ASME Section XI, Appendix VIII, Supplement 4, Para 3.2(c) for Examinations of RPV Shell and Head Welds.
Component Numbers:	Pressure Retaining Shell and Head Welds in Reactor Pressure Vessel (see Attachment 1 for component identification numbers)

B. CODE REQUIREMENT

ASME 1998 Code w/2000 Addenda, Section XI, Appendix VIII, Supplement 4, Subparagraph 3.2(c), states that the UT performance demonstration results must be plotted on a two-dimensional plot with the measured depth plotted along the ordinate axis and the true depth plotted along the abscissa axis. For qualification, the plot must satisfy the following statistical parameters: (1) slope of the linear regression line is not less than 0.7, (2) the mean deviation of flaw depth is less than 0.25 inches, and (3) correlation coefficient is not less than 0.70.

C. REASON FOR RELIEF REQUEST

The statistical parameters of Paragraph 3.2(c) of Supplement 4 to Appendix VIII are inconsistent with the PDI program criteria. This relief is requested under 10CFR50.55a(a)(3)(i) in that the proposed alternative would provide an acceptable level of quality and safety.

D. BASIS FOR RELIEF

ASME Code, Section XI, Appendix VIII, supplement 4, Subparagraph 3.2(c) imposes three statistical parameters for depth sizing. The first parameter, 3.2(c)(1), pertains to the scope of a linear regression line. The linear regression line is the difference between actual versus true value plotted along a through-wall thickness. For Supplement 4 performance demonstrations, a linear regression line of the data is not applicable because the performance demonstrations are performed on test specimens with flaws located in the 15 percent through-wall. The differences between the actual versus true value produce a tight grouping of results, which resemble a shotgun pattern. The slope of a regression line from such data is extremely sensitive to small variations, thus making the parameter of 3.2(c)(1), an inappropriate criterion. The second parameter, 3.2(c)(2), pertains to the mean deviation of flaw depth. The value used in the Code is too lax with respect to evaluating flaw depths within the inner 15 percent of wall thickness.

RELIEF REQUEST NUMBER: PRR-6
REVISION 0
(Page 2 of 3)

D. BASIS FOR RELIEF (cont'd)

Therefore, Entergy Nuclear Northeast proposes to use the more appropriate criterion of 0.15 inch RMS of 10CFR50.55a(b)(2)(xv)(C)(1), which modifies Subparagraph 3.2(a), as the acceptance criterion. The third parameter, 3.2(c)(3), pertains to a correction coefficient. The value of the correction coefficient in Subparagraph 3.2(c)(3) is inappropriate for this application since it is based on the linear regression from Subparagraph 3.2(c)(1).

Entergy believes the proposed alternative to use the RMS value of 10CFR50.55a(b)(2)(xv)(C)(1), which modifies the criterion of ASME Code, Appendix VIII, Supplement 4, Subparagraph 3.2(a), in lieu of Subparagraph 3.2(c), will provide an acceptable level of quality and safety.

E. ALTERNATIVE EXAMINATION

Pursuant to 10CFR50.55a(a)(3)(i), relief is requested to use the root mean square (RMS) value of 10CFR50.55a(b)(2)(xv)(C)(1), which modifies the depth sizing criteria of ASME Code, Section XI, 1998 Edition, 2000 Addenda, Appendix VIII, Supplement 4, Subparagraph 3.2(a), in lieu of Subparagraph 3.2(c) of Supplement 4 to Appendix VIII.

F. IMPLEMENTATION SCHEDULE

Relief is requested for the Fourth Ten-Year Interval of the Pilgrim Station Inservice Inspection Program, beginning July 1, 2005.

G. PRECEDENTS

This proposed alternative is essentially identical to PNPS 3rd Interval Relief Request PRR-32 (TAC No. MC2006). A similar request for relief was granted to Davis-Besse, Unit 1 (Docket No. 50-346, TAC No. MB1608, dated February 13, 2002). The NRC has also granted similar relief to Entergy's Vermont Yankee Station (TAC No. MB8354).

H. ATTACHMENTS

1. Component Identification Numbers Applicable to Relief Request PRR-6

RELIEF REQUEST NUMBER: PRR-6
REVISION 0
(Page 3 of 3)

Attachment 1: Component Identification Numbers Applicable to Relief Request PRR-6

Item No. B1.11: RPV Circumferential Shell Welds (7)

RPV-C-9-338	RPV-C-1-180	RPV-C-1-300
RPV-C-1-344	RPV-C-1-60	RPV-C-3-339A
RPV-C-3-339B		

Item No. B1.12: RPV Longitudinal Shell Welds (18)

RPV-L-2-338A	RPV-L-2	RPV-L-1-339C
RPV-L-1-339B	RPV-L-1-339A	RPV-L-2-338B
RPV-L-1-338A	RPV-L-1-338B	RPV-L-1-338C
RPV-L-2-339A	RPV-L-2-339B	RPV-L-2-339C
RPV-L-3	RPV-L-4	RPV-L-5
RPV-L-6	RPV-L-1	RPV-L-2-338C

Item No. B1.21: RPV Circumferential Head Welds (3)

RPV-BH-C1	RPV-BH-C2	RPV-TH-C

Item No. B1.22: RPV Meridional Head Welds (22)

RPV-BH-M3	RPV-BH-M2	RPV-BH-M14
RPV-BH-M13	RPV-BH-M12	RPV-BH-M11
RPV-BH-M4	RPV-BH-M1	RPV-TH-M6
RPV-BH-M10	RPV-BH-M5	RPV-BH-M6
RPV-BH-M7	RPV-BH-M8	RPV-TH-M7
RPV-TH-M5	RPV-TH-M4	RPV-TH-M3
RPV-TH-M2	RPV-TH-M1	RPV-TH-M8
RPV-BH-M9		

RELIEF REQUEST NUMBER: PRR-7
REVISION 0
(Page 1 of 3)

A. COMPONENT IDENTIFICATION

Class:	ALL
References:	ALL
Examination Category:	ALL
Item Numbers:	ALL
Description:	Transfer of Welder, Welding Operator, Brazer, etc. Qualifications between sites.

B. CODE REQUIREMENT

All welders shall be qualified by the Owner or Repair / Replacement Organization in accordance with the requirements of the codes specified in the IWA-4150 Repair / Replacement Program and Plan.

C. REASON FOR RELIEF REQUEST

ASME Code Case N-600 permits nuclear plant licensees to share welder qualifications with other licensees. This Code Case cuts welder qualification costs and provides each owner access to a larger resource pool of skilled, experienced, and qualified nuclear welders. This relief is requested under 10CFR50.55a(a)(3)(i) in that the proposed alternative would provide an acceptable level of quality and safety.

D. BASIS FOR RELIEF

ASME Section IX, "Welding Qualifications", requires that each organization qualify its own welders. Welder qualification responsibility cannot be subcontracted, and welder qualifications administered by one organization cannot be transferred to another organization. The basis for this requirement has become the subject of close scrutiny as the demand for efficiency, particularly among nuclear plant owners, has increased. Section IX's requirements for welder qualification are based, in part, on the fact that organizations with minimal welding experience may use Section IX. By requiring each organization to qualify its own welders, Section IX assures that all users attain some proficiency in evaluating welder skills. Welder qualification proficiency among nuclear owners, however, is not an issue. Extensive quality assurance programs mandate and continually reassess this proficiency.

The use of Code Case N-600 improves an owner's ability to attract quality welders by eliminating the obstacle of redundant performance qualification testing. It enables Owners to rely on each other's experience in selecting welders, permitting candidate selection to be based on actual field performance rather than qualification test. It also builds the resource pool of welders who, in addition to welding skills, understand and can comply with the extensive documentation and quality assurance requirements associated with nuclear work. These skills as well as a variety of other skills unique to nuclear power (e.g., radiation control, site security programs, NRC interface, etc.) are retained when experienced nuclear welders are transferred between sites.

RELIEF REQUEST NUMBER: PRR-7
REVISION 0
(Page 2 of 3)

D. BASIS FOR RELIEF (cont'd)

Pursuant to 10CFR50.55a(a)(3)(i), Entergy believes the proposed alternative to use Code Case N-600 in its entirely on welder qualification requirements provides an acceptable level of quality and safety.

E. ALTERNATIVE EXAMINATION

The following alternative requirements will be implemented as defined by ASME Section XI Code Case N-600, "Transfer of Welder, Welding Operator, Brazer, and Brazing Operator Qualifications Between Owners, Section XI, Division 1":

1. Entergy will perform a technical review of the supplying Owner's records of Welder Performance Qualification (WPQ), Welding Operator Performance Qualification (WOPQ), or Brazer/Brazing Operator Performance Qualification (BPQ).
2. The supplying Owner will state in writing that the WPQ, WOPQ, or BPQ was performed under an acceptable Nuclear Quality Assurance program that meets ASME Section XI, IWA-1400, and that the tests were performed in accordance with ASME Section IX.
3. Entergy will obtain any necessary supporting information to satisfy the requirements of ASME Section IX, QW-301.4 or QB-301.4.
4. Entergy will require each welder, welding operator, brazer, or brazing operator to demonstrate proficiency by completing a renewal qualification test in accordance with ASME Section IX, QW-322.2(a) or QB-322(b), as applicable, with the following additional requirements.
    a. When the WPQ transfer involves prior groove tests, the renewal test shall use a groove configuration.
    b. When the WPQ transfer involves prior fillet tests, the renewal tests may use either a groove or a fillet configuration.
5. Entergy will accept the responsibility for the Performance Qualification Test(s), and will document this acceptance on the renewal test record(s) for the WPQ/WOPQ/BPQ. The renewal test record(s) will reference the original WPQ/WOPQ/BPQ test record(s) supplied by the Owner that provided the qualification.
6. Entergy will accept the responsibility for compliance with ASME Section IX, QW-322 or QB-322, as applicable.
7. Entergy will not accept qualifications from any Owner that was not the qualifying organization nor transfer the supplied qualifications to any other Owner.
8. Entergy will comply with the Quality Assurance requirements of ASME Section XI, 1998 Edition, Article IWA-4142(a).
9. Entergy will document the use of this Case on the record of the WPQ/WOPQ/BPQ for the renewal qualification test(s).

RELIEF REQUEST NUMBER: PRR-7
REVISION 0
(Page 3 of 3)

F. IMPLEMENTATION SCHEDULE

Relief is requested for the Fourth Ten-Year Interval of the Pilgrim Station Inservice Inspection Program, beginning July 1, 2005.

G. PRECEDENTS

This proposed alternative is essentially identical to 3rd Interval Relief Request PRR-33 (TAC No. MC0338). A similar request for relief was approved for Point Beach Nuclear Plant, Units 1 and 2 (TAC Nos. MB5403 and MB5404, dated March 21, 2003).

H. ATTACHMENTS

None.

RELIEF REQUEST NUMBER: PRR-8
REVISION 0
(Page 1 of 4)

A. COMPONENT IDENTIFICATION

Class:	2
References:	IWC-2500-1
Examination Category:	C-F-1 and C-F-2
Item Numbers:	C5.10 through C5.41, and C5.50 through C5.81
Description:	Alternative to ASME Section XI, Class 2 Surface Examination Requirements
Component Numbers:	Pressure Retaining Piping Welds in above Categories

B. CODE REQUIREMENT

ASME Section XI IWC-2500 requires components be examined as specified in Table IWC-2500-1. These tables require a sampling of piping welds (as well as other components) be subjected to various types of non-destructive examinations (NDE, i.e. volumetric and/or surface examinations.) For the total population of non-exempt Category C-F-1 and C-F-2 piping welds, 7.5%, but not less than 28 welds, require surface examination.

C. REASON FOR RELIEF REQUEST

Entergy proposes to use ASME Code Case N-663 in its entirety as an alternative to the surface examination requirements of Table IWC-2500-1 for examination categories C-F-1 and C-F-2. All areas of the subject welds identified as susceptible to outside surface attack shall be surface examined during the Pilgrim Fourth Ten-Year Interval in accordance with Code Case N-663. This relief is requested under 10CFR50.55a(a)(3)(i) in that the proposed alternatives would provide an acceptable level of quality and safety.

D. BASIS FOR RELIEF

The subject item numbers in ASME Section XI require a volumetric and/or surface exam on selected piping welds to ensure that generic degradation mechanisms are not active on either the inside diameter (I.D.) or the outside diameter (O.D.). However, these welds are selected using a deterministic set of requirements that are un-informed as to any possible degradation mechanisms. ASME Code Case N-663 provides an alternative to the current ASME Section XI requirements for defining the number and location of surface examinations for piping components.

The ASME Section XI Task Group on ISI Optimization, Report No. 92-01-01, *Evaluation of Inservice Inspection Requirements for Class 1, Category B-J Pressure Retaining Welds in Piping*, dated July 1995, concluded (with 50 units responding with a total of 9333 welds inspected) only 2 welds (0.02%) were found to have flaws detected by ASME Section XI surface examinations.

RELIEF REQUEST NUMBER: PRR-8
REVISION 0
(Page 2 of 4)

D. BASIS FOR RELIEF (cont'd)

These flaws were determined to be fabrication-induced. In parallel with the above, several risk-informed Code cases have been developed for use on piping welds (e.g., ASME Code Cases N-560, N-577, and N-578). One of the methods for risk-informing piping examinations is via use of EPRI TR-112657, Rev. B-A, *Revised Risk-Informed Inservice Inspection Evaluation Procedure (NRC SER dated 10/28/99).*

Table 4-1, *Summary of Degradation-Specific Inspection Requirements and Examination Methods*, of the EPRI report lists the required degradation mechanisms to be evaluated in Class 1, 2, and 3 piping. It also identifies the risk-informed examination method required for each of these degradation mechanisms. The only degradation mechanism that requires a surface examination is O.D. chloride cracking. These two initiatives led ASME to investigate the value of surface examinations.

Code Case N-663 incorporates lessons learned from the risk-informed initiatives and industry examination experience into Section XI by requiring that an evaluation be conducted to identify locations, if any, where a surface examination would be of benefit from a generic piping degradation perspective. The results of this evaluation identify where O.D. degradation is most likely to occur by reviewing plant-specific programs and practices, and operating experience. If the potential for degradation is identified, Code Case N-663 defines examination techniques, volumes, and frequencies. As such, implementing Code Case N-663 will identify appropriate locations for surface examination, if any, and eliminate unnecessary examinations. Other ASME Section XI examination requirements for the subject piping welds, including volumetric examinations and pressure testing, will continue to be performed.

Code Case N-663 was approved by the ASME Boiler and Pressure Vessel Code Committee on September, 17, 2002, but has not yet been included in the most recent listing of NRC approved code cases provided in Revision 13 of Regulatory Guide 1.147, "Inservice Inspection Code Case Acceptability – ASME Section XI Division 1."

Compliance with the proposed alternatives described above will provide an adequate level of quality and safety for examination of the affected welds, and will not adversely impact the health and safety of the public.

E. ALTERNATIVE EXAMINATIONS

Code required surface examinations are applicable to the general population of C-F-1 and C-F-2 welds. The proposed alternatives as described in Code Case N-663 would require surface examination of areas identified as susceptible to outside surface attack, thus avoid unnecessary inspections and to conserve radiological dose, while still maintaining an adequate level of quality and safety for examination of the affected welds.

RELIEF REQUEST NUMBER: PRR-8
REVISION 0
(Page 3 of 4)

F. IMPLEMENTATION SCHEDULE

Relief is requested for the Fourth Ten-Year Interval of the Pilgrim Station Inservice Inspection Program, beginning July 1, 2005.

G. PRECEDENTS

This proposed alternative is essentially identical to PNPS 3rd Interval Relief Request PRR-34 (TAC No. MC1561). Similar requests for relief have been granted to Entergy's ANO-1, Grand Gulf, River Bend, Waterford 3, and Vermont Yankee plants (TAC Nos. MB6880, MB6881, MB6879, MB6882, and MB8351, respectively).

H. ATTACHMENTS

Code Case N-663 (for information).

RELIEF REQUEST NUMBER: PRR-8
REVISION 0
(Page 4 of 4)

II. ATTACHMENTS (cont'd)

Case N-663
Alternative Requirements for Class 1 and 2 Surface Examinations, Section XI, Division 1

Approval Date: September 17, 2002
Expiration Date: September 18, 2005

Inquiry: What alternative to the surface examination requirements for piping welds of Examination Categories B-F, B-J, C-F-1, and C-F-2 may be used?

Reply: It is the opinion of the Committee that in lieu of the surface examination requirements for piping welds of Examination Category B-F (NPS 4 and larger), B-J (NPS 4 and larger), C-F-1, and C-F-2, surface examinations may be limited to areas identified by the Owner as susceptible to outside surface attack.

Susceptibility to outside surface attack shall be determined in accordance with Table 1.

Examination Category B-F less than NPS 4 and Examination Category B-J less than NPS 4 shall be examined in accordance with IWB-2500.

All areas identified as susceptible to outside surface attack shall be examined during each interval. The requirements of 1WB 2411, IWB-2412, IWC-2411, and IWC-2412, as applicable, shall be met. Acceptance standards shall be in accordance with IWB-3514 or IWC-3514, as applicable. The areas shall be reexamined in the same sequence, during subsequent inspection intervals over the service lifetime of the piping item, to the extent practical.

TABLE 1
SUSCEPTIBILITY CRITERIA

Mechanism	Criteria
External chloride stress corrosion cracking	• austenitic stainless steel base metal, welds, or heat affected zone (HAZ), and • operating temperature > 150°F, and • a piping outside surface Is within five pipe diameters of a probable leak path (e.g., valve stem) and Is covered with nonmetallic Insulation that is not in compliance with U.S. NRC Regulatory Guide 1.36 (e.g., chloride content) or equivalent requirements or • austenitic stainless steel base metal, welds, or HAZ, and • a piping outside surface is exposed to wetting from a concentrated chloride-bearing environment (e.g., seawater, brackish water, brine)
Other outside surface initiated mechanisms	Items Identified as susceptible to outside surface attack by a plant-specific service history review. This review should include plant-specific processes and programs that minimize chlorides and other contaminants.

RELIEF REQUEST NUMBER: PRR-9
REVISION 0
(Page 1 of 14)

A. COMPONENT IDENTIFICATION

Class:	1
References:	Appendix VIII, Supplement 11
Examination Category:	Pressure Retaining Welds in piping subject to examination using procedures, personnel, and equipment qualified to ASME Code Section XI, Appendix VIII, Supplement 11.
Description:	Relief from ASME Section XI Appendix VIII, Supp. 11 requirements for structural overlay weld (PDI Examination).

B. CODE REQUIREMENT

The 1998 Edition with Addenda 2000 Code requirements for which relief is requested are all contained within Appendix VIII, Supplement 11. For example, paragraph 1.1(d)(1), requires that all base metal flaws be cracks. Paragraph 1.1(e)(1) requires that at least 20% but less than 40% of the flaws shall be oriented within ±20 degrees of the pipe axial direction. Paragraph 1.1(e)(1) also requires that the rules of IWA-3300 shall be used to determine whether closely spaced flaws should be treated as single or multiple flaws. Paragraph 1.1(e)(2)(a)(1) requires that a base grading unit shall include at least 3 inches (in.) of the length of the overlaid weld. Paragraph 1.1(e)(2)(b)(1) requires that a overlay grading unit shall include the overlay material and the base metal-to-overlay interface of at least 6 square inches (sq. in.). The overlay grading unit shall be rectangular, with minimum dimensions of 2 inches (in.). Paragraph 3.2(b) requires that all extensions of base metal cracking into the overlay material by at least 0.1 inches (in.) are reported as being intrusions into the overlay material.

C. REASON FOR RELIEF REQUEST

Pursuant to 10CFR50.55a(a)(3)(i), relief is requested to use the enclosed Performance Demonstration Initiative (PDI) Program for implementation of Appendix VIII, Supplement 11, requirements. The proposed alternatives would provide an acceptable level of quality and safety.

D. BASIS FOR RELIEF

Paragraph 1.1(d)(1) requires that all base metal flaws be cracks. As illustrated below, implanting a crack requires excavation of the base material on at least one side of the flaw. While this may be satisfactory for ferritic materials, it does not produce a useable axial flaw in austenitic materials because the sound beam, which normally passes only through base material, must now travel through weld material on at least one side, producing an unrealistic flaw response. To resolve this issue, the PDI program revised this paragraph to allow use of alternative flaw mechanisms under controlled conditions. For example, alternative flaws shall be limited to when implantation of cracks precludes obtaining an effective ultrasonic response, flaws shall be semi-elliptical with a tip width of less than or equal to 0.002 in., and at least 70 percent of the flaws in the detection and sizing test shall be cracks and the remainder shall be alternative flaws.

RELIEF REQUEST NUMBER: PRR-9
REVISION 0
(Page 2 of 14)

D. BASIS FOR RELIEF (cont'd)

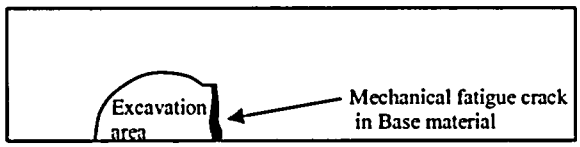

Relief is requested to allow closer spacing of flaws provided they did not interfere with detection or discrimination. The existing specimens used to-date for qualification to the Tri-party (NRC/BWROG/EPRI) agreement have a flaw population density greater than allowed by the current Code requirements. These samples have been used successfully for all previous qualifications under the Tri-party agreement program. To facilitate their use and provide continuity from the Tri-party agreement program to Supplement 11, the PDI Program has merged the Tri-party test specimens into their weld overlay program. For example: the requirement for using IWA-3300 for proximity flaw evaluation in paragraph 1.1(e)(1) was excluded, instead indications will be sized based on their individual merits; paragraph 1.1(d)(1) includes the statement that intentional overlay fabrication flaws shall not interfere with ultrasonic detection or characterization of the base metal flaws; paragraph 1.1(e)(2)(a)(1) was modified to require that a base metal grading unit include at least 1 (one) in. of the length of the overlaid weld, rather than 3 (three) in.; paragraph 1.1(e)(2)(a)(3) was modified to require sufficient unflawed overlaid weld and base metal to exist on all sides of the grading unit to preclude interfering reflections from adjacent flaws, rather than the 1 (one) in. requirement of Supplement 11; paragraph 1.1(e)(2)(b)(l) was modified to define an overlay fabrication grading unit as including the overlay material and the base metal-to-overlay interface for a length of at least 1 (one) in., rather than the 6 sq. in. requirement of Supplement 11; and, paragraph 1.1(e)(2)(b)(2) states that overlay fabrication grading units designed to be unflawed shall be separated by unflawed overlay material and unflawed base metal-to-overlay interface for at least 1 (one) in. at both ends, rather than around its entire perimeter.

Additionally, the requirement for axially oriented overlay fabrication flaws in paragraph 1.1(e)(1) was excluded from the PDI Program as an improbable scenario. Weld overlays are typically applied using automated gas tungsten arc welding techniques with the filler metal being applied in a circumferential direction. Because resultant fabrication induced discontinuities would also be expected to have major dimensions oriented in the circumferential direction, axial overlay fabrication flaws are unrealistic.

The requirement in paragraph 3.2(b) for reporting all extensions of cracking into the overlay is omitted from the PDI Program because it is redundant to the root mean square (RMS) calculations performed in paragraph 3.2(c) and it's presence adds confusion and ambiguity to depth sizing as required by paragraph 3.2(c). This also makes the weld overlay program consistent with the Supplement 2 depth sizing criteria.

D. BASIS FOR RELIEF (cont'd)

These changes are contained in Code Case N-653. A comparison between the 1995 Edition and 1996 Addenda of Supplement 11, Code Case N-653, and the PDI Program is enclosed as supporting documentation. The first (left) column identifies the Code requirements, while the second (middle) column identifies the changes made by the Code Case.

There are, however, some additional changes that were inadvertently omitted from the Code Case. The most important change is paragraph 1.1(a)(1) where the phrase "and base metal on both sides" was inadvertently included in the description of a base metal grading unit. The PDI program intentionally excludes this requirement because some of the qualification samples include flaws on both sides of the weld. To avoid confusion, several instances of the term "cracks" or "cracking" were changed to the term "flaws" because of the use of alternative flaw mechanisms. Additionally, to avoid confusion, the overlay thickness tolerance contained in paragraph 1.1(b) last sentence, was reworded and the phrase "and the remainder shall be alternative flaws" was added to the next to last sentence in paragraph 1.1(d)(1). Additional editorial changes were made to the PDI program to address an earlier request for additional information. The above changes are identified by **bold** print in the third (right) column of the attachment.

E. ALTERNATIVE EXAMINATION

In lieu of the requirements of ASME Section XI, 1998 Edition, 2000 Addenda, Appendix VIII, Supplement 11, the PDI Program shall be used.

F. IMPLEMENTATION SCHEDULE

Relief is requested for the Fourth Ten-Year Interval of the Pilgrim Station Inservice Inspection Program, beginning July 1, 2005.

G. PRECEDENTS

A similar request for relief has been granted to Entergy's Vermont Yankee plant (TAC No. MB8356).

H. ATTACHMENTS

Table 1: Appendix VIII Supplement 11 Requirements vs. PDI Program Requirements

RELIEF REQUEST NUMBER: PRR-9
REVISION 0
(Page 4 of 14)

Table 1: APPENDIX VIII SUPPLEMENT 11 REQUIREMENTS VS. PDI PROGRAM REQUIREMENTS

APPENDIX VIII SUPPLEMENT 11 Current Requirements	CODE CASE N-653 (Provided for Information Only)	PDI PROGRAM The Proposed Alternative to Supplement 11 Requirements
1.0 SPECIMEN REQUIREMENTS		
Qualification test specimens shall meet the requirements listed herein, unless a set of specimens is designed to accommodate specific limitations stated in the scope of the examination procedure (e.g., pipe size, weld joint configuration, access limitations). The same specimens may be used to demonstrate both detection and sizing qualification.	No Change	No Change
1.1 General. The specimen set shall conform to the following requirements.	No Change	No Change
(a) Specimens shall have sufficient volume to minimize spurious reflections that may interfere with the interpretation process.	No Change	No Change
(b) The specimen set shall consist of at least three specimens having different nominal pipe diameters and overlay thicknesses. They shall include the minimum and maximum nominal pipe diameters for which the examination procedure is applicable. Pipe diameters within a range of 0.9 to 1.5 times a nominal diameter shall be considered equivalent. If the procedure is applicable to pipe diameters of 24 in. or larger, the specimen set must include at least one specimen 24 in. or larger but need not include the maximum diameter. The specimen set must include at least one specimen with overlay thickness within -0.1 in. to +0.25 in. of the maximum nominal overlay thickness for which the procedure is applicable.	No Change	*(b)* **The specimen set shall consist of at least three specimens having different nominal pipe diameters and overlay thicknesses. They shall include the minimum and maximum nominal pipe diameters for which the examination procedure is applicable. Pipe diameters within a range of 0.9 to 1.5 times a nominal diameter shall be considered equivalent. If the procedure is applicable to pipe diameters of 24 in. or larger, the specimen set must include at least one specimen 24 in. or larger but need not include the maximum diameter.** **The specimen set shall include specimens with overlays not thicker than 0.1 in. more than the minimum thickness, nor thinner than 0.25 in. of the maximum nominal overlay thickness for which the examination procedure is applicable.**

RELIEF REQUEST NUMBER: PRR-9
REVISION 0
(Page 5 of 14)

Table 1: APPENDIX VIII SUPPLEMENT 11 REQUIREMENTS VS. PDI PROGRAM REQUIREMENTS

APPENDIX VIII SUPPLEMENT 11 Current Requirements	CODE CASE N-653 (Provided for Information Only)	PDI PROGRAM The Proposed Alternative to Supplement 11 Requirements
(c) The surface condition of at least two specimens shall approximate the roughest surface condition for which the examination procedure is applicable.	No Change	No Change
(d) Flaw Conditions		
(1) Base metal flaws. All flaws must be cracks in or near the butt weld heat-affected zone, open to the inside surface, and extending at least 75% through the base metal wall. Flaws may extend 100% through the base metal and into the overlay material; in this case, intentional overlay fabrication flaws shall not interfere with ultrasonic detection or characterization of the cracking. Specimens containing IGSCC shall be used when available.	(1) Base metal flaws. All flaws must be in or near the butt weld heat-affected zone, open to the inside surface, and extending at least 75% through the base metal wall. Intentional overlay fabrication flaws shall not interfere with ultrasonic detection or characterization of the cracking. Specimens containing IGSCC shall be used when available. (a) At least 70 percent of the flaws in the detection and sizing tests shall be cracks. Alternative flaw mechanisms, if used, shall provide crack-like reflective characteristics and shall be limited by the following: (1) Flaws shall be limited to when implantation of cracks precludes obtaining a realistic ultrasonic response. (2) Flaws shall be semielliptical with a tip width of less than or equal to 0.002 inches.	(1) Base metal flaws. All flaws must be in or near the butt weld heat-affected zone, open to the inside surface, and extending at least 75% through the base metal wall. Intentional overlay fabrication flaws shall not interfere with ultrasonic detection or characterization of the **base metal flaws.** Specimens containing IGSCC shall be used when available. At least 70 percent of the flaws in the detection and sizing tests shall be cracks **and the remainder shall be alternative flaws.** Alternative flaw mechanisms, if used, shall provide crack-like reflective characteristics and shall be limited by the following: (a) **The use of Alternative flaws** shall be limited to when **the** implantation of cracks **produces spurious reflectors that are uncharacteristic of actual flaws.** (b) Flaws shall be semi-elliptical with a tip width of less than or equal to 0.002 inches.

RELIEF REQUEST NUMBER: PRR-9
REVISION 0
(Page 6 of 14)

Table 1: APPENDIX VIII SUPPLEMENT 11 REQUIREMENTS VS. PDI PROGRAM REQUIREMENTS		
APPENDIX VIII SUPPLEMENT 11 Current Requirements	**CODE CASE N-653 (Provided for Information Only)**	**PDI PROGRAM The Proposed Alternative to Supplement 11 Requirements**
(2) Overlay fabrication flaws. At least 40% of the flaws shall be non-crack fabrication flaws (e.g., sidewall lack of fusion or laminar lack of bond) in the overlay or the pipe-to-overlay interface. At least 20% of the flaws shall be cracks. The balance of the flaws shall be of either type.	**No Change**	**No Change**
(e) Detection Specimens		
(1) At least 20% but less than 40% of the flaws shall be oriented within ±20 deg. of the pipe axial direction. The remainder shall be oriented circumferentially. Flaws shall not be open to any surface to which the candidate has physical or visual access. The rules of IWA-3300 shall be used to determine whether closely spaced flaws should be treated as single or multiple flaws.	**(1) At least 20% but less than 40% of the base metal flaws shall be oriented within +20 deg. of the pipe axial direction. The remainder shall be oriented circumferentially. Flaws shall not be open to any surface to which the candidate has physical or visual access.**	**(1) At least 20% but less than 40% of the base metal flaws shall be oriented within +20 deg. of the pipe axial direction. The remainder shall be oriented circumferentially. Flaws shall not be open to any surface to which the candidate has physical or visual access.**
(2) Specimens shall be divided into base and overlay grading units. Each specimen shall contain one or both types of grading units.	(2) Specimens shall be divided into base metal and overlay fabrication grading units. Each specimen shall contain one or both types of grading units. Flaws shall not interfere with ultrasonic detection or characterization of other flaws.	(2) Specimens shall be divided into base metal and overlay fabrication grading units. Each specimen shall contain one or both types of grading units. Flaws shall not interfere with ultrasonic detection or characterization of other flaws.

RELIEF REQUEST NUMBER: PRR-9
REVISION 0
(Page 7 of 14)

Table 1: APPENDIX VIII SUPPLEMENT 11 REQUIREMENTS VS. PDI PROGRAM REQUIREMENTS

APPENDIX VIII SUPPLEMENT 11 Current Requirements	CODE CASE N-653 (Provided for Information Only)	PDI PROGRAM The Proposed Alternative to Supplement 11 Requirements
(a)(1) A base grading unit shall include at least 3 in. of the length of the overlaid weld. The base grading unit includes the outer 25% of the overlaid weld and base metal on both sides. The base grading unit shall not include the inner 75% of the overlaid weld and base metal overlay material, or base metal-to-overlay interface.	*(a)(1)* A base metal grading unit shall include at least 1 in. of the length of the overlaid weld. The base metal grading unit includes the outer 25% of the overlaid weld and base metal on both sides. The base metal grading unit shall not include the inner 75% of the overlaid weld and base metal overlay material, or base metal-to-overlay interface.	*(a)(1)* A base metal grading unit includes the overlay material and the outer 25% of the original overlaid weld. The base metal grading unit shall extend circumferentially for at least 1 in. and shall start at the weld centerline and be wide enough in the axial direction to encompass one half of the original weld crown and a minimum of 0.50" of the adjacent base material.
(a)(2) When base metal cracking penetrates into the overlay material, the base grading unit shall include the overlay metal within 1 in. of the crack location. This portion of the overlay material shall not be used as part of any overlay grading unit.	(a)(2) When base metal cracking penetrates into the overlay material, the base metal grading unit shall not be used as part of any overlay fabrication grading unit.	(a)(2) When base metal flaws penetrate into the overlay material, the base metal grading unit shall not be used as part of any overlay fabrication grading unit.
(a)(3) When a base grading unit is designed to be unflawed, at least 1 in. of unflawed overlaid weld and base metal shall exist on either side of the base grading unit. The segment of weld length used in one base grading unit shall not be used in another base grading unit. Base grading units need not be uniformly spaced around the specimen.	(a)(3) Sufficient unflawed overlaid weld and base metal shall exist on all sides of the grading unit to preclude interfering reflections from adjacent flaws.	(a)(3) Sufficient unflawed overlaid weld and base metal shall exist on all sides of the grading unit to preclude interfering reflections from adjacent flaws.
(b)(l) An overlay grading unit shall include the overlay material and the base metal-to-overlay interface of at least 6 sq. in. The overlay grading unit shall be rectangular, with minimum dimensions of 2 in.	*(b)*(l) An overlay fabrication grading unit shall include the overlay material and the base metal-to-overlay interface for a length of at least 1 in.	*(b)*(l) An overlay fabrication grading unit shall include the overlay material and the base metal-to-overlay interface for a length of at least 1 in.

RELIEF REQUEST NUMBER: PRR-9
REVISION 0
(Page 8 of 14)

Table 1: APPENDIX VIII SUPPLEMENT 11 REQUIREMENTS VS. PDI PROGRAM REQUIREMENTS

APPENDIX VIII SUPPLEMENT 11 Current Requirements	CODE CASE N-653 (Provided for Information Only)	PDI PROGRAM The Proposed Alternative to Supplement 11 Requirements
(b)(2) An overlay grading unit designed to be unflawed shall be surrounded by unflawed overlay material and unflawed base metal-to-overlay interface for at least 1 in. around its entire perimeter. The specific area used in one overlay grading unit shall not be used in another overlay grading unit. Overlay grading units need not be spaced uniformly about the specimen.	(b)(2) Overlay fabrication grading units designed to be unflawed shall be separated by unflawed overlay material and unflawed base metal-to-overlay interface for at least 1 in. at both ends. Sufficient unflawed overlaid weld and base metal shall exist on both sides of the overlay fabrication grading unit to preclude interfering reflections from adjacent flaws. The specific area used in one overlay fabrication grading unit shall not be used in another overlay fabrication grading unit. Overlay fabrication grading units need not be spaced uniformly about the specimen.	(b)(2) Overlay fabrication grading units designed to be unflawed shall be separated by unflawed overlay material and unflawed base metal-to-overlay interface for at least 1 in. at both ends. Sufficient unflawed overlaid weld and base metal shall exist on both sides of the overlay fabrication grading unit to preclude interfering reflections from adjacent flaws. The specific area used in one overlay fabrication grading unit shall not be used in another overlay fabrication grading unit. Overlay fabrication grading units need not be spaced uniformly about the specimen.
(b)(3) Detection sets shall be selected from Table VIII-S2-1. The minimum detection sample set is five flawed base grading units, ten unflawed base grading units, five flawed overlay grading units, and ten unflawed overlay grading units. For each type of grading unit, the set shall contain at least twice as many unflawed as flawed grading units.	(b)(3) Detection sets shall be selected from Table VIII-S2-1. The minimum detection sample set is five flawed base metal grading units, ten unflawed base metal grading units, five flawed overlay fabrication grading units, and ten unflawed overlay fabrication grading units. For each type of grading unit, the set shall contain at least twice as many unflawed as flawed grading units. For initial procedure qualification, detection sets shall include the equivalent of three personnel qualification sets. To qualify new values of essential variables, at least one personnel qualification set is required.	(b)(3) Detection sets shall be selected from Table VIII-S2-1. The minimum detection sample set is five flawed base metal grading units, ten unflawed base metal grading units, five flawed overlay fabrication grading units, and ten unflawed overlay fabrication grading units. For each type of grading unit, the set shall contain at least twice as many unflawed as flawed grading units. For initial procedure qualification, detection sets shall include the equivalent of three personnel qualification sets. To qualify new values of essential variables, at least one personnel qualification set is required.

RELIEF REQUEST NUMBER: PRR-9
REVISION 0
(Page 9 of 14)

Table 1: APPENDIX VIII SUPPLEMENT 11 REQUIREMENTS VS. PDI PROGRAM REQUIREMENTS

APPENDIX VIII SUPPLEMENT 11 Current Requirements	CODE CASE N-653 (Provided for Information Only)	PDI PROGRAM The Proposed Alternative to Supplement 11 Requirements
(f) Sizing Specimen		
(1) The minimum number of flaws shall be ten. At least 30% of the flaws shall be overlay fabrication flaws. At least 40% of the flaws shall be cracks open to the inside surface.	**(1) The minimum number of flaws shall be ten. At least 30% of the flaws shall be overlay fabrication flaws. At least 40% of the flaws shall be cracks open to the inside surface. For initial procedure qualification, sizing sets shall include the equivalent of three personnel qualification sets. To qualify new values of essential variables, at least one personnel qualification set is required.**	(1) The minimum number of flaws shall be ten. At least 30% of the flaws shall be overlay fabrication flaws. At least 40% of the flaws shall be open to the inside surface. **Sizing sets shall contain a distribution of flaw dimensions to assess sizing capabilities.** For initial procedure qualification, sizing sets shall include the equivalent of three personnel qualification sets. To qualify new values of essential variables, at least one personnel qualification set is required.
(2) At least 20% but less than 40% of the flaws shall be oriented axially. The remainder shall be oriented circumferentially. Flaws shall not be open to any surface to which the candidate has physical or visual access.	**No Change**	**No Change**
(3) Base metal cracking used for length sizing demonstrations shall be oriented circumferentially.	**No Change**	**(3) Base metal flaws used for length sizing demonstrations shall be oriented circumferentially.**
(4) Depth sizing specimen sets shall include at least two distinct locations where cracking in the base metal extends into the overlay material by at least 0.1 in. in the through-wall direction.	**No Change**	**(4) Depth sizing specimen sets shall include at least two distinct locations where a base metal flaw extends into the overlay material by at least 0.1 in. in the through-wall direction.**

RELIEF REQUEST NUMBER: PRR-9
REVISION 0
(Page 10 of 14)

Table 1: APPENDIX VIII SUPPLEMENT 11 REQUIREMENTS VS. PDI PROGRAM REQUIREMENTS		
APPENDIX VIII SUPPLEMENT 11 Current Requirements	**CODE CASE N-653 (Provided for Information Only)**	**PDI PROGRAM The Proposed Alternative to Supplement 11 Requirements**
2.0 CONDUCT OF PERFORMANCE DEMONSTRATION		
The specimen inside surface and identification shall be concealed from the candidate. All examinations shall be completed prior to grading the results and presenting the results to the candidate. Divulgence of particular specimen results or candidate viewing of unmasked specimens after the performance demonstration is prohibited.	**The specimen inside surface and identification shall be concealed from the candidate. All examinations shall be completed prior to grading the results and presenting the results to the candidate. Divulgence of particular specimen results or candidate viewing of unmasked specimens after the performance demonstration is prohibited. The overlay fabrication flaw test and the base metal flaw test may be performed separately.**	**The specimen inside surface and identification shall be concealed from the candidate. All examinations shall be completed prior to grading the results and presenting the results to the candidate. Divulgence of particular specimen results or candidate viewing of unmasked specimens after the performance demonstration is prohibited. The overlay fabrication flaw test and the base metal flaw test may be performed separately.**
2.1 Detection Test.		
Flawed and unflawed grading units shall be randomly mixed. Although the boundaries of specific grading units shall not be revealed to the candidate, the candidate shall be made aware of the type or types of grading units (base or overlay) that are present for each specimen.	**Flawed and unflawed grading units shall be randomly mixed. Although the boundaries of specific grading units shall not be revealed to the candidate, the candidate shall be made aware of the type or types of grading units (base metal or overlay fabrication) that are present for each specimen.**	**Flawed and unflawed grading units shall be randomly mixed. Although the boundaries of specific grading units shall not be revealed to the candidate, the candidate shall be made aware of the type or types of grading units (base metal or overlay fabrication) that are present for each specimen.**
2.2 Length Sizing Test		
(a) The length sizing test may be conducted separately or in conjunction with the detection test.	**No Change**	**No Change**

RELIEF REQUEST NUMBER: PRR-9
REVISION 0
(Page 11 of 14)

Table 1: APPENDIX VIII SUPPLEMENT 11 REQUIREMENTS VS. PDI PROGRAM REQUIREMENTS

APPENDIX VIII SUPPLEMENT 11 Current Requirements	CODE CASE N-653 (Provided for Information Only)	PDI PROGRAM The Proposed Alternative to Supplement 11 Requirements
(b) When the length sizing test is conducted in conjunction with the detection test and the detected flaws do not satisfy the requirements of 1.1(f), additional specimens shall be provided to the candidate. The regions containing a flaw to be sized shall be identified to the candidate. The candidate shall determine the length of the flaw in each region.	No Change	No Change
(c) For a separate length sizing test, the regions of each specimen containing a flaw to be sized shall be identified to the candidate. The candidate shall determine the length of the flaw in each region.	No Change	No Change
(d) For flaws in base grading units, the candidate shall estimate the length of that part of the flaw that is in the outer 25% of the base wall thickness.	***(d)* For flaws in base metal grading units, the candidate shall estimate the length of that part of the flaw that is in the outer 25% of the base metal wall thickness.**	***(d)* For flaws in base metal grading units, the candidate shall estimate the length of that part of the flaw that is in the outer 25% of the base metal wall thickness.**
2.3 Depth Sizing Test.		
For the depth sizing test, 80% of the flaws shall be sized at a specific location on the surface of the specimen identified to the candidate. For the remaining flaws, the regions of each specimen containing a flaw to be sized shall be identified to the candidate. The candidate shall determine the maximum depth of the flaw in each region.	The candidate shall determine the depth of the flaw in each region.	(a) The depth sizing test may be conducted separately or in conjunction with the detection test.

RELIEF REQUEST NUMBER: PRR-9
REVISION 0
(Page 12 of 14)

Table 1: APPENDIX VIII SUPPLEMENT 11 REQUIREMENTS VS. PDI PROGRAM REQUIREMENTS

APPENDIX VIII SUPPLEMENT 11 Current Requirements	CODE CASE N-653 (Provided for Information Only)	PDI PROGRAM The Proposed Alternative to Supplement 11 Requirements
		(b) When the depth sizing test is conducted in conjunction with the detection test and the detected flaws do not satisfy the requirements of 1.1(f), additional specimens shall be provided to the candidate. The regions containing a flaw to be sized shall be identified to the candidate. The candidate shall determine the maximum depth of the flaw in each region.
		(c) For a separate depth sizing test, the regions of each specimen containing a flaw to be sized shall be identified to the candidate. The candidate shall determine the maximum depth of the flaw in each region.
3.0 ACCEPTANCE CRITERIA		
3.1 Detection Acceptance Criteria.		
Examination procedures, equipment, and personnel are qualified for detection when the results of the performance demonstration satisfy the acceptance criteria of Table VIII-S2-1 for both detection and false calls. The criteria shall be satisfied separately by the demonstration results for base grading units and for overlay grading units.	**Examination procedures are qualified for detection when all flaws within the scope of the procedure are detected and the results of the performance demonstration satisfy the acceptance criteria of Table VIII-S2-1 for false calls. Examination equipment and personnel are qualified for detection when the results of the performance demonstration satisfy the acceptance criteria of Table VIII-S2-1 for both detection and false calls. The criteria shall be satisfied separately by the demonstration results for base metal grading units and for overlay fabrication grading units.**	a) Examination procedures are qualified for detection when;

RELIEF REQUEST NUMBER: PRR-9
REVISION 0
(Page 13 of 14)

Table 1: APPENDIX VIII SUPPLEMENT 11 REQUIREMENTS VS. PDI PROGRAM REQUIREMENTS		
APPENDIX VIII SUPPLEMENT 11 Current Requirements	**CODE CASE N-653 (Provided for Information Only)**	**PDI PROGRAM The Proposed Alternative to Supplement 11 Requirements**
		1) All flaws within the scope of the procedure are detected and the results of the performance demonstration satisfy the acceptance criteria of Table VIII-S2-1 for false calls.
		(a) At least one successful personnel demonstration has been performed meeting the acceptance criteria defined in (b).
		(b)Examination equipment and personnel are qualified for detection when the results of the performance demonstration satisfy the acceptance criteria of Table VIII-S2-1 for both detection and false calls.
		(c) The criteria in (a), (b) shall be satisfied separately by the demonstration results for base metal grading units and for overlay fabrication grading units.3.2 Sizing Acceptance Criteria.
Examination procedures, equipment, and personnel are qualified for sizing when the results of the performance demonstration satisfy the following criteria.	**No Change**	**No Change**
(a) The RMS error of the flaw length measurements, as compared to the true flaw lengths, is less than or equal to 0.75 inch. The length of base metal cracking is measured at the 75% through-base-metal position.	**No Change**	***(a)* The RMS error of the flaw length measurements, as compared to the true flaw lengths, is less than or equal to 0.75 inch. The length of base metal flaws is measured at the 75% through-base-metal position.**

RELIEF REQUEST NUMBER: PRR-9
REVISION 0
(Page 14 of 14)

Table 1: APPENDIX VIII SUPPLEMENT 11 REQUIREMENTS VS. PDI PROGRAM REQUIREMENTS		
APPENDIX VIII SUPPLEMENT 11 Current Requirements	**CODE CASE N-653 (Provided for Information Only)**	**PDI PROGRAM The Proposed Alternative to Supplement 11 Requirements**
(b) All extensions of base metal cracking into the overlay material by at least 0.1 in. are reported as being intrusions into the overlay material.	**This requirement is omitted.**	**This requirement is omitted.**
(c) The RMS error of the flaw depth measurements, as compared to the true flaw depths, is less than or equal to 0.125 in.	*(b)* The RMS error of the flaw depth measurements, as compared to the true flaw depths, is less than or equal to 0.125 in.	*(b)* The RMS error of the flaw depth measurements, as compared to the true flaw depths, is less than or equal to 0.125 in.

RELIEF REQUEST NUMBER: PRR-10
REVISION 0
(Page 1 of 6)

A. COMPONENT IDENTIFICATION

Class:	1
References:	IWB-2500-1
Examination Category:	B-F and B-J Welds only
Item Numbers:	B5.10, B5.20, B5.30 B5.100, B5.110, B5.120 B9.11, B9.21, B9.31, B9.32, B9.40
Description:	Risk Informed ISI for Class 1 B-F & B-J Welds
Component Numbers:	Various

B. CODE REQUIREMENT

ASME Code Section XI 1998 Edition with 2000 Addenda, , IWB-2500-1 requires in part that for each successive 10-Year ISI Interval, 100% of Category B-F welds and 25% of B-J welds for the ASME Class 1 piping greater then 4" NPS be selected for volumetric and/or surface examination.

C. REASON FOR RELIEF REQUEST

ASME Section XI, Examination Categories B-F and B-J currently contain the requirements for the non-destructive examination (NDE) of Class 1 piping components. The previously approved RI-ISI program (Reference 1) will be substituted for Class 1 piping (Examination Categories B-F and B-J) in accordance with 10CFR50.55a(a)(3)(i) by alternatively providing an acceptable level of quality and safety. Other non-related portions of the ASME Section XI Code will be unaffected. For example, existing pressure testing requirements and Class 2 piping inspection requirements remained unchanged.

D. BASIS FOR RELIEF AND ALTERNATIVE EXAMINATIONS

Pursuant to 10 CFR 50.55a(a)(3), NRC approval of the Pilgrim Risk-Informed Inservice Inspection Program (RI-ISI) as an alternative to the current 1998 Code with 2000 Addenda, ASME Section XI inspection requirements for Class 1 Code Examination Category B-J and B-F piping welds is requested. The Pilgrim RI-ISI Program has been developed in accordance with the EPRI methodology contained in EPRI TR-112657, "Risk-Informed Inservice Inspection Evaluation Procedure" (Reference 2). It was approved for use at Pilgrim during the 2nd Period of the 3rd Inspection Interval and is still applicable for the 4th Inspection Interval. The Pilgrim-specific RI-ISI program is summarized in Table 1. The RI-ISI program has been updated consistent with the intent of NEI-04-05 (Reference 3) and continues to meet EPRI TR-112657 and Reg. Guide 1.174 risk acceptance criteria.

RELIEF REQUEST NUMBER: PRR-10
REVISION 0
(Page 2 of 6)

D. BASIS FOR RELIEF AND ALTERNATIVE EXAMINATIONS (cont'd)

The ASME Code Section XI Code required minimum percentage (34%) was completed in the 1st Period of the 3rd ISI Interval and the remaining sixty-six percent (66%) of the RI-ISI program welds were completed by the end of the 3rd Inspection Interval, as required by Reference 1. This Relief Request is to align the RI-ISI Interval and Code Year with the 4th Interval ISI Program. 100% of the RI-ISI Program weld examinations will be completed in the 4th Inspection Interval.

E. IMPLEMENTATION SCHEDULE

Relief is requested for the Fourth Ten-Year Interval of the Pilgrim Station Inservice Inspection Program, beginning July 1, 2005.

F. PRECEDENTS

USNRC previously approved the Pilgrim RI-ISI program via Reference 1.

G. ATTACHMENTS

1. Table 1, "Inspection Location Selection Comparison Between 1989 ASME Section XI Code and EPRI TR-112657 by Risk Category."

2. Table 2, "Inspection Location Selection Comparison Between 1989 ASME Section XI Code and EPRI TR-112657 by Risk Region."

H. REFERENCES

1. USNRC Letter dated May 2, 2001 "Pilgrim Nuclear Power Station – Relief Request Regarding Approval of Alternative Risk-Informed Inservice Inspection Program for the Third Inspection Interval" (TAC No. MB0841).

2. Revised Risk-Informed Inservice Inspection Evaluation Procedure, EPRI, Palo Alto, CA: 1999. TR-112657, Rev B-A.

3. NEI-04-05, "Living Program Guidance to Maintain Risk-Informed Inservice Inspection Programs for Nuclear Plant Piping Systems", dated April 2004.

RELIEF REQUEST NUMBER: PRR-10
REVISION 0
(Page 3 of 6)

Table 1
Inspection Location Selection Comparison Between 1989 ASME Section XI Code and EPRI TR-112657 by Risk Category

System[1]	Risk		Consequence Rank	Failure Potential		Code Category	Weld Count	1st Approved RI-ISI Interval		New RI-ISI Interval	
	Category	Rank		DMs	Rank			RI-ISI	Other[2]	RI-ISI	Other[2]
RPV	2 (1)	High (High)	High	TASCS, TT, CC, (FAC)	Medium (High)	B-F	4	4		4	
RPV	2 (2)	High (High)	High	CC, (IGSCC)	Medium (Medium)	B-F	2	1[3]		1[3]	
RPV	4 (1)	Medium (High)	High	None (FAC)	Low (High)	B-F	4	1		1	
RPV	4 (2)	Medium (High)	High	None (IGSCC)	Low (Medium)	B-F	14	2[4]		2[4]	
RPV	4	Medium	High	None	Low	B-F	5	1		1	
RPV	6	Low	Medium	None	Low	B-F	4	0		0	
MS	2	High	High	TT	Medium	B-J	3	1		1	
MS	4 (1)	Medium (High)	High	None (FAC)	Low (High)	B-J	78	8[5]		8[5]	
MS	4	Medium	High	None	Low	B-J	4	1		1	
MS	5	Medium	Medium	TT	Medium	B-J	3	1		1	
MS	6 (3)	Low (High)	Medium	None (FAC)	Low (High)	B-J	4	0		0	
RECIRC	4	Medium	High	None	Low	B-J	66	7		7	
RECIRC	7	Low	Low	None	Low	B-J	4	0		0	
FW	2 (1)	High (High)	High	TASCS, TT, (FAC)	Medium (High)	B-J	19	4		4	
FW	2 (1)	High (High)	High	TT, (FAC)	Medium (High)	B-J	24	4[6]		4[6]	
FW	4 (1)	Medium (High)	High	None (FAC)	Low (High)	B-J	33	4[7]		4[7]	

RELIEF REQUEST NUMBER: PRR-10
REVISION 0
(Page 4 of 6)

Table 2
Inspection Location Selection Comparison Between 1989 ASME Section XI Code and EPRI TR-112657 by Risk Region

System	Risk		Consequence Rank	Failure Potential		Code Category RI-ISI	Weld Count	1st Approved RI-ISI Interval		New RI-ISI Interval	
	Category	Rank		DMs	Rank			RI-ISI	Other(2)	RI-ISI	Other(2)
RHR	2	High	High	TASCS	Medium	B-J	8	3		3	
RHR	2	High	High	TT	Medium	B-J	7	1		1	
RHR	4 (2)	Medium (High)	High	None (IGSCC)	Low (Medium)	B-J	5	0		0	
RHR	4	Medium	High	None	Low	B-J	24	3		3	
RHR	6 (5)	Low (Medium)	Medium	None (IGSCC)	Low (Medium)	B-J	2	0		0	
RHR	6	Low	Medium	None	Low	B-J	8	0		0	
RHR	7	Low	Low	None	Low	B-F	1	0		0	
						B-J	3	0		0	
SBLC	4	Medium	High	None	Low	B-J	30	3		3	
SBLC	6	Low	Medium	None	Low	B-J	39	0		0	
RWCU	4 (1)	Medium (High)	High	None (FAC)	Low (High)	B-J	14	2(8)		2(8)	
RWCU	4 (2)	Medium (High)	High	None (IGSCC)	Low (Medium)	B-J	3	1(9)		1(9)	
RWCU	4	Medium	High	None	Low	B-F	1	0		0	
						B-J	57	6		6	
RWCU	6 (3)	Low (High)	Medium	None (FAC)	Low (High)	B-J	1	0		0	
RWCU	6 (5)	Low (Medium)	Medium	None (IGSCC)	Low (Medium)	B-J	5	0		0	
RWCU	6	Low	Medium	None	Low	B-F	1	0		0	
						B-J	32	0		0	
RWCU	7	Low	Low	None	Low	B-J	2	0		0	

RELIEF REQUEST NUMBER: PRR-10
REVISION 0
(Page 5 of 6)

Table 2 (cont'd)
Inspection Location Selection Comparison Between 1989 ASME Section XI Code and EPRI TR-112657 by Risk Category

System[1]	Risk		Consequence Rank	Failure Potential		Code Category RI-ISI	Weld Count	1st Approved RI-ISI Interval		New RI-ISI Interval	
	Category	Rank		DMs	Rank			RI-ISI	Other[2]	RI-ISI	Other[2]
RCIC	4	Medium	High	None	Low	B-J	24	3		3	
RCIC	6	Low	Medium	None	Low	B-J	12	0		0	
CS	4 (2)	Medium (High)	High	None (IGSCC)	Low (Medium)	B-F	4	2[10]		2[10]	
						B-J	11	0		0	
CS	4	Medium	High	None	Low	B-J	23	3		3	
CS	6 (5)	Low (Medium)	Medium	None (IGSCC)	Low (Medium)	B-J	2	0		0	
CS	6	Low	Medium	None	Low	B-J	4	0		0	
HPCI	2	High	High	TASCS	Medium	B-J	2	1		1	
HPCI	4	Medium	High	None	Low	B-J	32	4		4	
HPCI	6	Low	Medium	None	Low	B-J	7	0		0	

Notes to Table 2:

1. Systems are described in the Pilgrim FSAR.

2. The column labeled "Other" is generally used to identify augmented inspection program locations credited per Section 3.6.5 of EPRI TR-112657. The EPRI methodology allows augmented inspection program locations to be credited if the inspection locations selected strictly for RI-ISI purposes produce less than a 10% sampling of the overall Class 1 weld population. As stated in Section 4.5 of this template, PNPS achieved an 11% sampling without relying on augmented inspection program locations beyond those selected by the RI-ISI process. The "Other" column has been retained in this table solely for uniformity purposes with the other RI-ISI application template submittals.

RELIEF REQUEST NUMBER: PRR-10
REVISION 0
(Page 6 of 6)

Notes to Table 2 (cont'd):

3. This weld was selected for examination by both the Generic Letter 88-01 IGSCC Program and the RI-ISI Program. Since crevice corrosion was identified along with IGSCC as a damage mechanism for this weld, the IGSCC examination will include the examination requirements identified in EPRI TR-112657 for crevice corrosion in order to be credited toward both the IGSCC and RI-ISI Programs.

4. These two welds were selected for examination by both the Generic Letter 88-01 IGSCC Program and the RI-ISI Program. Since IGSCC was the only damage mechanism identified for these welds, the IGSCC examinations will be credited toward both programs.

5. Two of these eight welds were selected for examination by both the FAC and RI-ISI Programs. Since FAC is the only damage mechanism identified for these welds, the FAC examinations will be credited towards both programs.

6. Three of the four welds were selected for examination by both the FAC and RI-ISI Programs. Since a damage mechanism other than FAC was identified, these welds will be subject to both FAC and RI-ISI examinations.

7. These four welds were selected for examination by both the FAC and RI-ISI Programs. Since FAC was the only damage mechanism identified for these welds, the FAC examinations will be credited toward both programs.

8. These two welds were selected for examination by both the FAC and RI-ISI Programs. Since FAC was the only damage mechanism identified for these welds, the FAC examinations will be credited toward both programs.

9. This weld was selected for examination by both the Generic Letter 88-01 IGSCC Program and the RI-ISI Program. Since IGSCC was the only damage mechanism identified for this weld, the IGSCC examination will be credited toward both programs.

10. These two welds were selected for examination by both the Generic Letter 88-01 IGSCC Program and the RI-ISI Program. Since IGSCC was the only damage mechanism identified for these welds, the IGSCC examinations will be credited toward both programs.

RELIEF REQUEST NUMBER: PRR-11
REVISION 0
(Page 1 of 4)

A. COMPONENT IDENTIFICATION

Class:	1
References:	IWB-2500-1
Examination Category:	B-A – Pressure Retaining Welds in Reactor Vessel
Item Number:	B1.30 – Reactor Vessel Shell-to-Flange Weld
Description:	Proposes use of PDI methods to perform UT of the RPV Shell-to-Flange Weld
Component Numbers:	RPV-SF-0-120, RPV-SF-120-240, RPV-SF-240-360

B. CODE REQUIREMENT

ASME Section XI, 1998 Edition with Addenda through 2000, Appendix I, Subparagraph I-2110(b) requires that ultrasonic examination (UT) of reactor vessel flange-to-shell welds be conducted in accordance with Article 4 of ASME Section V, supplemented by the requirements of Table I-2000-1. In addition, Regulatory Guide 1.150, Revision 1, "Ultrasonic Testing of Reactor Vessel Welds During Pre-service and Inservice Examinations," serves as regulatory guidance for the UT examination of RPV welds.

C. REASON FOR RELIEF REQUEST

Relief is requested pursuant to 10CFR50.55a(a)(3)(i) to gain ultrasonic technique and requirement synergy with the examination of the other RPV shell welds and to conserve radiological dose, while still maintaining an adequate level of quality and safety for examination of the affected welds.

D. BASIS FOR RELIEF

Federal Register Notice 67FR187, dated September 26, 2002, requires that ASME Section XI, Appendix VIII, Supplement 4, "Qualification Requirements for the Clad/Base Metal Interface of Reactor Vessel", and Supplement 6, "Qualification Requirements for Reactor Vessel Welds other than Clad/Base Metal Interface", be implemented for most of the RPV welds, starting November 22, 2000. Per ASME Section XI, Appendix I, Subparagraph I-2110(b), reactor vessel-to-flange and head-to-flange welds are the only reactor vessel pressure boundary welds not included in Appendix VIII.

During the upcoming ten-year RPV weld examinations [due during the First Period of the Fourth Interval per 10CFR50.55a(g)], Pilgrim will be employing personnel, procedures, and equipment, demonstrated and qualified by the PDI and in accordance with ASME Code, Section XI, 1998 Edition, with Addenda through 2000, Appendix VIII, Supplements 4 and 6 as amended by the Federal Register Notice 67FR187, dated September 26, 2002 for examination of RPV shell welds.

RELIEF REQUEST NUMBER: PRR-11
REVISION 0
(Page 2 of 4)

D. BASIS FOR RELIEF (cont'd)

Appendix VIII was developed to ensure the effectiveness of UT examinations within the nuclear industry by means of a rigorous item-specific performance demonstration. The performance demonstration is conducted on an RPV mockup containing flaws of various sizes and locations. The demonstration establishes the capability of equipment, procedures, and personnel to find flaws that could be detrimental to the integrity of the RPV.

Although Appendix VIII is not a requirement for this weld, the qualification process to Appendix VIII criteria demonstrates that the examination and evaluation techniques are equal or surpass the requirements of Appendix I, Subparagraph 2110(b), ASME Section V, Article 4, and the guidance in RG 1.150.

A comparison between the ASME Section V, Article 4 based UT methods and the procedures developed to satisfy the PDI and Appendix VIII can be best described as a comparison between a compliance-based procedure (ASME Section V, Article 4) and a results-based procedure (PDI/Appendix VIII). ASME Section V, Article 4 procedures use an amplitude-based technique and a known reflector. The proposed alternate UT method was established independently from the acceptance standards for flaw size found in ASME Section XI.

A PDI-qualified sizing method is considered more accurate than the method used in ASME Code, Section V, Article 4. The proposed alternate UT examination technique provides an acceptable level of quality and examination repeatability as compared to the Article 4 requirements.

Pilgrim will obtain the examination vendor's Performance Demonstration Qualification Sheet (PDQS), which will attest that their procedure is in compliance with the detection and sizing tolerance requirements of Appendix VIII. The PDI qualification method is based on a group of samples, which validate the acceptable flaw sizes in ASME Section XI. The sensitivity necessary to detect these flaws is considered to be equal to or better than the sensitivity obtained through ASME Section V, Article 4, because sensitivity necessary to detect implanted cracks is generally better than that necessary to calibrate on a machined notch.

The examination and sizing procedures for all potential qualified examination vendors use echo-dynamic motion and tip diffraction characteristics of the flaw instead of the amplitude characteristics required by ASME Section V, Article 4. The search units are required to interrogate the same examination volume as depicted by ASME Section XI, Figure IWB-2500-4 for the shell-to-flange weld joint.

Procedures used for satisfying the requirements of ASME Section V, Article 4 for the UT examination of the RPV-to-flange weld has not undergone such a rigorous demonstration or received the same qualifications as a PDI qualified procedure.

RELIEF REQUEST NUMBER: PRR-11
REVISION 0
(Page 3 of 4)

D. BASIS FOR RELIEF (cont'd)

The Pilgrim RPV shell-to-flange geometry compares very favorably with the geometry of the PDI qualification specimens. The inside diameter surface (the scan surface) of the shell-to-flange weld and adjacent base material is theoretically a cylinder; there is no taper associated with this joint on the RPV ID at Pilgrim. The shell base material thickness (excluding clad) is 5 5/16". The flange thickness (excluding clad) within the extremity of the required examination volume is 10 5/8". Pilgrim will require that the vendor's PDQS bound this thickness range. It is expected that an examination will be able to be performed from both the shell and the flange sides of the weld.

The shell-to-flange weld was examined radiographically and ultrasonically as a part of the RPV fabrication. During the second ten-year inservice inspection interval this weld was re-examined. In 1996, the weld was examined by remote automated inspection per 10CFR50a(g) during the first period of the third ten-year inservice inspection interval. This last examination was conducted in accordance with Appendix VIII using PDI-demonstrated procedures, even though Appendix VIII was not mandatory at the time.

If Pilgrim were to conduct examination of the RPV vessel-to-flange weld in accordance with ASME Section V, Article 4 and RG 1.150, it is expected that the examination would be performed using manual techniques from the vessel OD inside the drywell at the top of the bio-shield wall, and also from the vessel flange mating surface in the reactor refueling cavity. The use of Appendix VIII Supplements 4 and 6 for examination of this weld using remote automated inspection tooling is expected to significantly reduce personnel radiation exposure.

Compliance with the proposed alternatives described above will provide an adequate level of quality and safety for examination of the affected welds, and will not adversely impact the health and safety of the public.

E. ALTERNATIVE EXAMINATION

It is proposed to use a Performance Demonstration Initiative (PDI) qualified procedure to complete the UT of the RPV vessel-to-flange weld in accordance with ASME Section XI, 1998 Edition with Addenda through 2000, Appendix VIII Supplements 4 and 6 as amended by the Federal Register Notice 67FR187, dated September 26, 2002.

F. IMPLEMENTATION SCHEDULE

Relief is requested for the Fourth Ten-Year Interval of the Pilgrim Station Inservice Inspection Program, beginning July 1, 2005.

RELIEF REQUEST NUMBER: PRR-11
REVISION 0
(Page 4 of 4)

G. PRECEDENTS

The NRC has granted similar relief to Salem Generating Station, Unit 1 (TAC No. MB1234), Comanche Peak Steam Electric Station, Unit 2 (TAC No. MB3039), and Entergy's Vermont Yankee Station (TAC No. MB8357).

RELIEF REQUEST NUMBER: PRR-12
REVISION 0
(Page 1 of 3)

A. COMPONENT IDENTIFICATION

Class:	1
References:	IWB-2500-1
Examination Category:	B-A – Pressure Retaining Welds in Reactor Vessel
Item Number:	B1.30 – Reactor Vessel Shell-to-Flange Weld
Description:	Deferral of RPV Shell-to-Flange Weld Examinations to 3rd Period During RPV 10-Year ISI
Component Numbers:	RPV-SF-0-120, RPV-SF-120-240, RPV-SF-240-360

B. CODE REQUIREMENT

ASME Section XI, IWB-2420 (a) requires the repetition of the sequence of component examinations, which was established during the first inspection interval during successive intervals.

ASME Section XI, IWB-2500, Table IWB-2500-1, Examination Category B-A requires a volumetric examination of the shell-to-flange weld (Item B1.30) during the first and/or third inspection period of the interval, and during each successive inspection interval.

C. REASON FOR RELIEF REQUEST

Relief is requested from performing the code required volumetric examinations on the Reactor Vessel shell-to-flange weld during the First Period of the 4th Inspection Interval. Rather, the entire shell-to-flange weld examination will be deferred to no later than the Third Period of the 4th Inspection Interval. The examination will be performed in conjunction with the RPV 10-Year ISI. Pursuant to 10CFR50.55a(a)(3)(ii), relief is requested on the basis that the specified requirements would result in hardship or unusual difficulty without a compensating increase in the level of quality and safety.

D. BASIS FOR RELIEF

The 1998 ASME XI Code, with 2000 Addenda, which applies to Pilgrim, requires a volumetric examination of the shell-to-flange weld during the Fourth Ten-Year Inservice Inspection Interval. Examination Category B-A, Item B1.30, Note (3), allows approximately 50% of the shell-to-flange weld be examined by the end of the first inspection period.

This relief request defers examination of the entire shell-to-flange weld until the Third Inspection Period of the 4th Interval, in conjunction with the RPV 10-year ISI examinations. However, deferral of the entire exam to the Third Period of the 4th Interval does not follow the sequence of examinations followed during the previous intervals.

RELIEF REQUEST NUMBER: PRR-12
REVISION 0
(Page 2 of 3)

D. BASIS FOR RELIEF (cont'd)

Therefore, relief is also requested from section IWB-2420 (a) of ASME, Section XI. This deferral will allow the inspection of the shell-to-flange weld to coincide with the inspections of the reactor pressure vessel (RPV) shell welds. Performing the inspection of the shell-to-flange weld during the same outage as the RPV shell welds affords the following advantages.

- The inspection of the shell-to-flange weld, in conjunction with the inspection of the RPV shell welds, reduces the radiation exposure to plant workers. If the shell-to-flange weld is inspected as currently scheduled (50 percent during the first inspection period and 50 percent during the third period of the 4th Inspection Interval), these examinations will be completed manually and requires access the vessel flange twice during the 10 year interval which increases critical path outage time. If the inspection of the shell-to-flange weld is deferred until the latter portion of the interval, then the inspection can be done in conjunction with the RPV shell welds and decreases overall critical path time. The coordination of the vessel flange inspection in conjunction with the RPV 10 year ISI is expected to reduce person-rem exposure as the flange inspection will be schedule for only one time during the interval. In addition, coordinating this work with the RPV 10 year ISI inspection will reduce critical path by inspecting the vessel flange weld only once in a 10 year interval.

- The inspection of the entire shell-to-flange weld during the latter portion of the interval, in conjunction with the RPV shell welds, reduces the outage time and cost associated with this inspection as it will be done once in a 10 year interval vs. code requirements. This also reduces person-rem and the risk of contamination to inspection personnel, as this examination will only be completed once in the 10 year ISI interval.

- 100% of the vessel to flange weld was inspected during a previous refueling outage (RFO-10 in 1995) at the end of the 2nd 10-year ISI Interval. No indications were noted.

Deferral of the examination of the reactor vessel shell-to-flange to the 3rd Period will provide an acceptable level of safety and quality. Pilgrim's shell-to-flange weld was 100% manually examined during the 3rd Ten-Year Interval. These exams did not reveal any rejectable indications or service related defects. Therefore, based upon a lack of any rejectable indications, deferral of the 4th 10-Year Interval exams until the 3rd Period does not constitute a safety hazard. Therefore, requiring a partial inspection of the flange weld during Refueling Outage RFO-16 (1st Period) would constitute an exposure, economic and schedule hardship without a compensating increase in quality or safety.

RELIEF REQUEST NUMBER: PRR-12
REVISION 0
(Page 3 of 3)

D. BASIS FOR RELIEF (cont'd)

The proposed alternative would provide an acceptable level of quality and safety as allowed by 10CFR50.55(a)(3)(ii). In addition, Pilgrim will be notified if any flaws are detected at other Nuclear Power Plants through the Operating Experience Program. If this were to occur the schedule for inspection would be re-evaluated.

E. ALTERNATE EXAMINATIONS OR TESTS

Pilgrim will perform the code required shell to flange exam using a manual inspection technique or a remote controlled, automated inspection tool in the 3rd period of the 4th 10 year ISI interval, in conjunction with the RPV 10 year ISI inspection.

F. IMPLEMENTATION SCHEDULE

Relief is requested for the Fourth Ten-Year Interval of the Pilgrim Station Inservice Inspection Program, beginning July 1, 2005.

G. PRECEDENTS

Similar requests for relief have been granted to Entergy Operations, Inc.'s James A. FitzPatrick (TAC No. MA 6270) and Indian Point 3 (TAC No. MA 9757).

H. ATTACHMENTS

None.

RELIEF REQUEST NUMBER: PRR-13
REVISION 0
(Page 1 of 6)

A. COMPONENT IDENTIFICATION

Class:	1
References:	Table IWB-2500-1
Examination Category:	B-D – Full Penetration Welded Nozzles in Vessels – Inspection Program B
Item Number:	B3.90 – Reactor Vessel Nozzle-to-Vessel Welds
Description:	RPV Nozzle-to-Vessel Welds
Component Numbers:	28 total, per the following table:

RPV-N10-NV	RPV-N1A-NV	RPV-N1B-NV	RPV-N2A-NV	RPV-N2B-NV
RPV-N2C-NV	RPV-N2D-NV	RPV-N2E-NV	RPV-N2F-NV	RPV-N2G-NV
RPV-N2H-NV	RPV-N2J-NV	RPV-N2K-NV	RPV-N3A-NV	RPV-N3B-NV
RPV-N3C-NV	RPV-N3D-NV	RPV-N4A-NV	RPV-N4B-NV	RPV-N4C-NV
RPV-N4D-NV	RPV-N6A-NV	RPV-N6B-NV	RPV-N7A-NV	RPV-N7B-NV
RPV-N8-NV	RPV-N9A-NV	RPV-N9B-NV		

B. CODE REQUIREMENT

ASME Boiler and Pressure Vessel Code, Section XI, Rules for Inservice Inspection of Nuclear Power Plant Components, 1998 Edition with 2000 Addenda: Table IWB-2500-1 Code Item B3.90, Figure IWB-2500-7 (a) thru (d) for defining the examination volume of the reactor nozzle-to-vessel welds.

C. REASON FOR RELIEF REQUEST

Entergy proposes to use Code Case N-613-1 for the nozzle-to-vessel shell welds examination volume. The Code required examination volume of the nozzle-to-vessel welds is unnecessarily large. This relief is requested under 10CFR50.55a(a)(3)(i) in that the proposed alternative to use Code Case N-613-1 will not affect the flaw detection capabilities in the weld and heat affected zone, and it will provide an adequate level of quality and safety for examination of the affected welds.

D. BASIS FOR RELIEF

The examination volume for the reactor vessel pressure retaining nozzle-to-vessel welds extends far beyond the weld into the base metal, and is unnecessarily large. This prolongs the examination time significantly, and results in no net increase in safety, as the area being examined is a base metal region which is not prone to in-service cracking and has been extensively examined before the vessel was put into service, in addition to the first, second, and third interval examinations Code Case N-613-1 reduces the examination volume next to the widest part of the weld from half of the vessel wall thickness to one-half (1/2)

RELIEF REQUEST NUMBER: PRR-13
REVISION 0
(Page 2 of 6)

D. BASIS FOR RELIEF (cont'd)

inch. This removes examination of the base metal that was extensively examined during construction and in three subsequent in-service inspections. This region is not in the high residual stress region associated with the weld; cracks, should they initiate, occur in the high-stressed areas of the weld. These high-stressed areas are contained in the volume that is defined by Code Case N-613-1 and are subject to examination.

Code Case N-613-1 also eliminates the requirement to detect flaws perpendicular to the weld-base metal interface; however, relief for this aspect of Code Case N-613-1 is not. being sought.

Compliance with the proposed alternatives described above in the above items will provide an adequate level of quality and safety for examination of the affected welds, and will not adversely impact the health and safety of the public.

E. ALTERNATE EXAMINATIONS OR TESTS

In lieu of the requirements of ASME Section XI, 1998 Edition, 2000 Addenda, Figure IWB-2500-7(b), it is proposed to use the alternative examination volume requirements of Code Case N-613-1.

F. IMPLEMENTATION SCHEDULE

Relief is requested for the Fourth Ten-Year Interval of the Pilgrim Station Inservice Inspection Program, beginning July 1, 2005.

G. PRECEDENTS

This proposed alternative is essentially identical to the model provided by the Performance Demonstration Initiative on the EPRI website. The NRC has also granted similar relief to Entergy's Vermont Yankee Station (TAC No. MB8355).

H. ATTACHMENTS

Code Case N-613-1 is attached for information.

RELIEF REQUEST NUMBER: PRR-13
REVISION 0
(Page 3 of 6)

CASE
N-613-1

CASES OF ASME BOILER AND PRESSURE VESSEL CODE

Approval Date: August 28, 2002
See Numeric Index for expiration and any reaffirmation dates.

Case N-613-1
Ultrasonic Examination of Full Penetration Nozzles in Vessels, Examination Category B-D, Item No's. B3.10 and B3.90, Reactor Nozzle-To-Vessel Welds, Figs. IWB-2500-7(a), (b), and (c) Section XI, Division 1

Inquiry: What alternatives to the examination volume requirements of Figs. IWB-2500-7(a), (b), and (c) are permissible for ultrasonic examination of reactor-nozzle-to-vessel welds?

Reply: It is the opinion of the Committee that Category B-D nozzle-to-vessel welds previously ultrasonically examined using the examination volumes of Figs. IWB-2500-7(a), (b), and (c) may be examined using the reduced examination volume (A-B-C-D-E-F-G-H) of Figs. 1, 2, and 3.

1029

SUPP. 8 – NC

RELIEF REQUEST NUMBER: PRR-13
REVISION 0
(Page 4 of 6)

CASE (continued)

N-613-1

CASES OF ASME BOILER AND PRESSURE VESSEL CODE

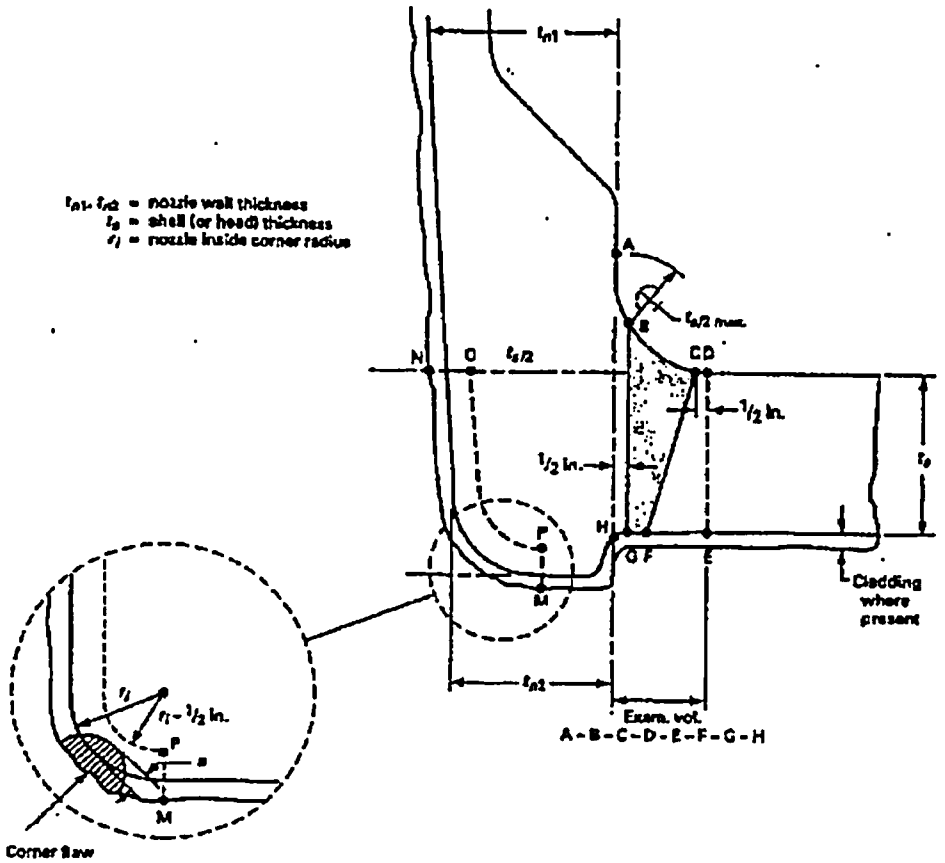

EXAMINATION REGION (Note (1))	EXAMINATION VOLUME (Note (2))
Shell (or head) adjoining region	C-D-E-F
Attachment weld region	B-C-F-G
Nozzle cylinder region	A-B-G-H
Nozzle inside corner region	M-N-O-P

NOTES:
(1) Examination regions are identified for the purpose of differentiating the acceptance standards in IWB-3512.
(2) Examination volumes may be determined either by direct measurements on the component or by measurements based on design drawings.

FIG. 1 NOZZLE IN SHELL OR HEAD
(Examination Zones in Barrel Type Nozzles Joined by Full Penetration Corner Welds)

RELIEF REQUEST NUMBER: PRR-13
REVISION 0
(Page 5 of 6)

CASE (continued)
N-613-1

CASES OF ASME BOILER AND PRESSURE VESSEL CODE

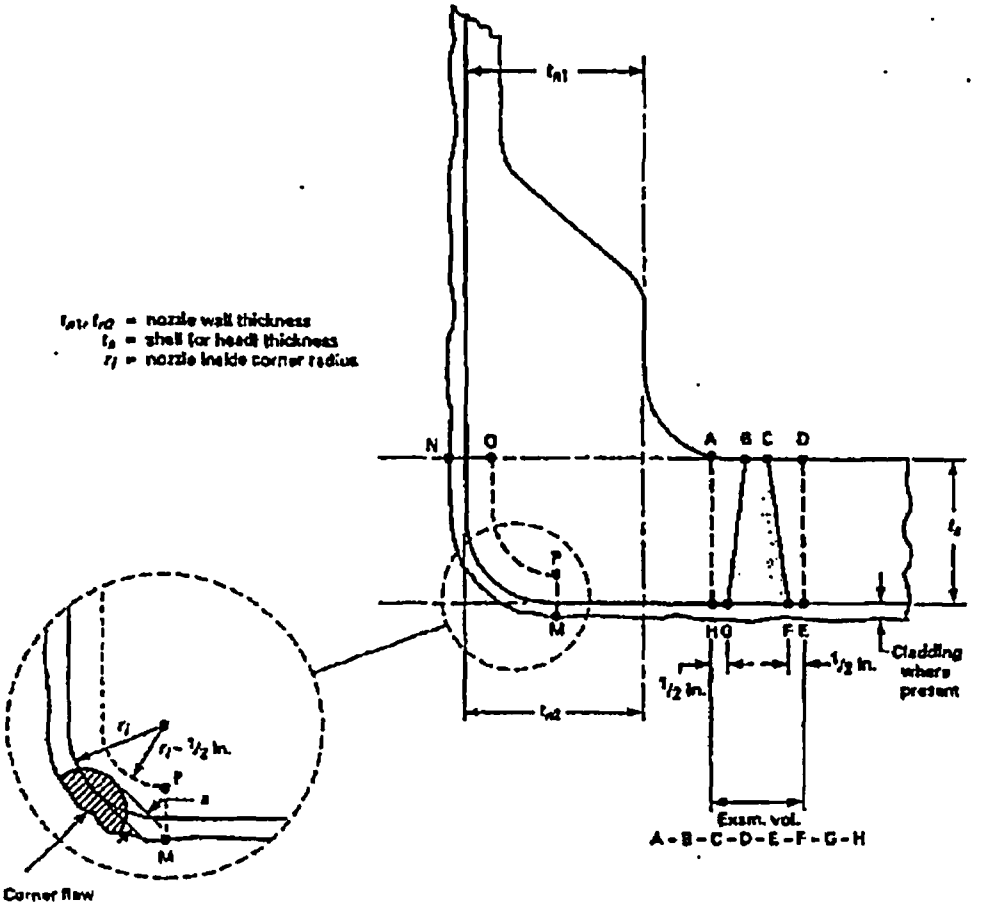

EXAMINATION REGION (Note (1))	EXAMINATION VOLUME (Note (2))
Shell (or head) adjoining region	C-D-E-F
Attachment weld region	B-C-F-G
Nozzle cylinder region	A-B-G-H
Nozzle inside corner region	M-N-O-P

NOTES:
(1) Examination regions are identified for the purpose of differentiating the acceptance standards in IWB-3512.
(2) Examination volumes may be determined either by direct measurements on the component or by measurements based on design drawings.

FIG. 2 NOZZLE IN SHELL OR HEAD
(Examination Zones in Flange Type Nozzles Joined by Full Penetration Butt Welds)

RELIEF REQUEST NUMBER: PRR-13
REVISION 0
(Page 6 of 6)

CASE (continued)

N-613-1

CASES OF ASME BOILER AND PRESSURE VESSEL CODE

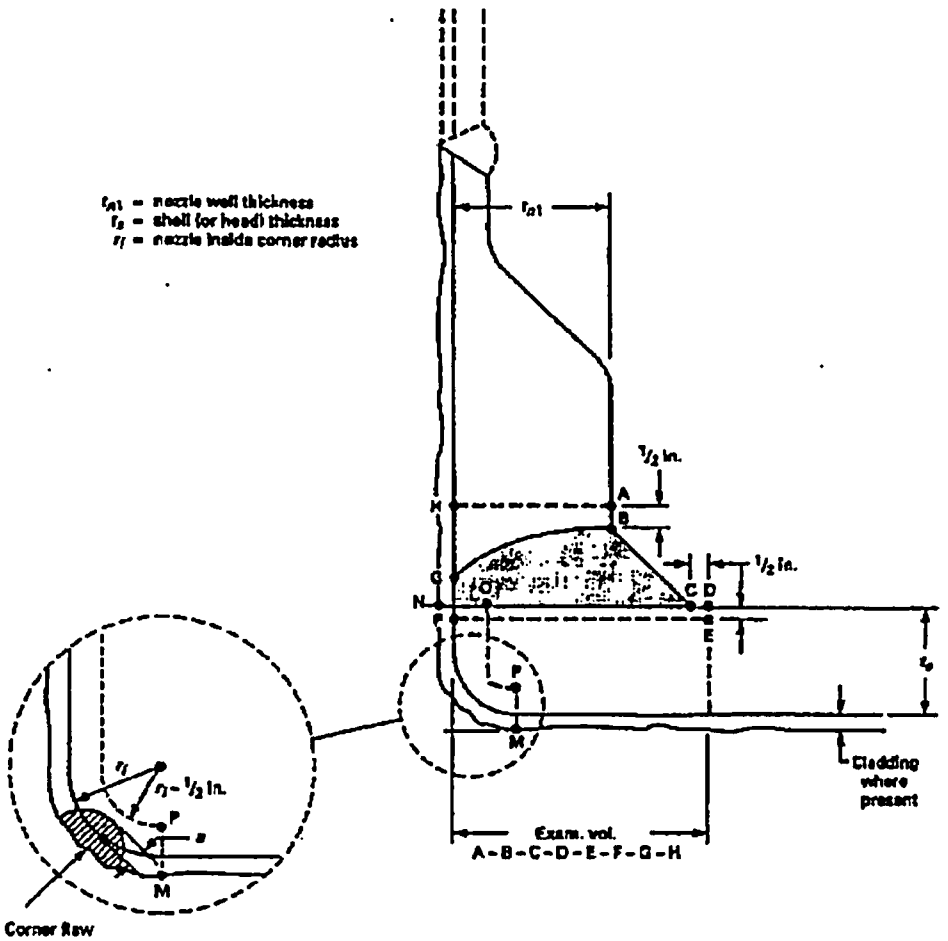

EXAMINATION REGION (Note (1))	EXAMINATION VOLUME (Note (2))
Shell (or head) adjoining region	C-D-E-F-G
Attachment weld region	B-C-G
Nozzle cylinder region	A-B-G-H
Nozzle inside corner region	M-N-G-P

NOTES:
(1) Examination regions are identified for the purpose of differentiating the acceptance standards in IWB-3512.
(2) Examination volumes may be determined either by direct measurements on the component or by measurements based on design drawings.

FIG. 3 NOZZLE IN SHELL OR HEAD
(Examination Zones in Set-On Type Nozzles Joined by Full Penetration Corner Welds)

SUPP. 6 - NC

1032

RELIEF REQUEST NUMBER: PRR-14
REVISION 0
(Page 1 of 10)

A. COMPONENT IDENTIFICATION

Class:	1
References:	None
Examination Category:	B-G-1: Code Items B6.120, B6.150, B6.160, B6.170, B6.180, B6.210 B-G-2: Code Items B7.10, B7.40, B7.50, B7.60, B7.70 C-D: Code Item C4.20
Description:	Use of Code Case N-652, as an Alternative to Categories B-G-1, B-G-2, and C-D Bolting Examination Methods and Selection Criteria

B. CODE REQUIREMENT

1. ASME Section XI, Category B-G-1, Code Item Nos. B6.120, B6.150, B6.180, and B6.210 requires volumetric examination of bolts and studs in heat exchangers, piping, pumps, and valves regardless of whether the bolts or studs are examined in place or removed.

2. For ASME Section XI, Category B-G-1, Code Item Nos. B6.120, B6.150, B6.180, and B6.210, volumetric examinations of bolting on heat exchangers, piping, pumps, and valves are limited to components selected for examination under Examination Categories B-B, B-J, B-L-2, and B-M-2.

3. For ASME Section XI, Category C-D, Code Item No. C4.20, the required inspection of 100% of bolts and studs at each bolted connection may be limited to the flange connections in piping runs selected for examination under Code Examination Category C-F.

4. ASME Section XI, Category B-G-2, Code Item Nos. B7.10, B7.40, B7.50, B7.60, and B7.70 require visual examination of all Class 1 bolts, studs, and nuts 2 inches and less in diameter in place under tension, when the connection is disassembled, or when the bolting is removed.

C. REASON FOR RELIEF REQUEST

Entergy is requesting relief to avoid unnecessary inspections and to conserve radiological dose, while still maintaining an adequate level of quality and safety for examination of the affected bolting. This relief is requested under 10CFR50.55a(a)(3)(i) in that the proposed alternatives would provide an acceptable level of quality and safety.

D. BASIS FOR RELIEF

The use of Code Case N-652 as an alternative to Section XI code requirements will avoid unnecessary inspections and will conserve radiological dose at PNPS. The service experience of bolting throughout the nuclear industry is exemplary. Bolting degradation is only associated with leakage and other provisions address examination of bolting at leaking connections. Entergy's basis for relief follows:

RELIEF REQUEST NUMBER: PRR-14
REVISION 0
(Page 2 of 10)

D. BASIS FOR RELIEF (cont'd)

1. New notes (Note 2 of Category B-G-1 and Note 5 of Category C-D in Code Case N-652) were added to Categories B-G-1 and C-D to allow surface examination to be substituted for volumetric examination when bolting is removed for the examination. This recognizes that bolting failures initiate from the OD surface and that a surface exam is an acceptable technique for detection of such defects.

   The existing examination methods require volumetric examination of removed bolting greater than two inches, even when surface examination is at least an equal, and possibly a more appropriate, examination.

   Code Case 307-2, in which examination of the borehole surfaces of bolts and studs was eliminated, demonstrates that cracking initiates on the outside surfaces of bolts and studs. For this reason, a qualified surface examination meeting the acceptance standards of IWB-3515 would provide at least the sensitivity for flaw detection that an end shot ultrasonic examination would provide on bolts and studs that have been removed for examination. Consequently, when bolts or studs are removed for examination, either a surface or volumetric examination should be allowed.

2. Note 3 of Section XI Category B-G-1 was changed (Note 4 in Code Case N-652 Category B-G-1) to require heat exchangers, pumps, and valves to be grouped based on design, type, and function, and then one component among the group to be volumetrically examined during the interval. In addition, if the component selected for examination included more than one bolted connection, then only one of those bolted connections is required to be examined. The note was also revised to apply only to volumetric examination as a new note was added to address visual examination of bolting for heat exchangers, pumps, and valves. Reference to examination of bolting for piping was also removed as a new note was added to address this.

   Previously, the Code only required bolting for heat exchangers, pumps and valves to be examined when the component was selected for examination under Categories B-B, B-L-2, or B-M-2. These Categories require the components to be selected for examination only when the component is disassembled. There appears to be no technical justification to tie volumetric examination of bolting to component disassembly. This change makes the Class 1 requirements for volumetric examination of bolting on these type components identical to the existing Class 2 requirements.

   Under existing Section XI examination rules, Category B-G-1 volumetric examination of bolted connections in heat exchangers, pumps, and valves is required only when the major component is disassembled for maintenance, repair, or volumetric examination. This is inconsistent with, and actually less stringent than, the requirements of Category C-D, wherein

D. BASIS FOR RELIEF (cont'd)

volumetric examination of a sample of bolted connections in vessels, pumps and valves is required regardless of whether the component is disassembled for maintenance or repair. Therefore, even though bolting inspection will be performed under a sample program (one connection of like connections), the change made by Code Case N-652 is more restrictive in that it will require examination of Category B-G-1 bolting regardless of whether the connection is disassembled.

3. A new note (Note 6 in Code Case N-652, Category B-G-1) was added in Category B-G-1 to clarify the requirements for examination of flange bolting in piping systems. It requires examination of one bolted connection among a group of bolted connections that are similar to design, type, function, and service.

   A new Note 3 was added in Code Case N-652, Category B-G-2 to clarify the requirements for examination of flange bolting in piping systems. It requires examination of one bolted connection among a group of bolted connections that are similar to design, type, function, and service.

   Note 2 of Category C-D was editorially revised to clarify the language. No technical changes were made to this note.

   Note 3 of Category C-D was revised to clarify the requirements for examination of flange bolting in piping systems. It requires examination of one bolted connection among a group of bolted connections that are similar to design, type, function, and service.

   The current code requires examination of bolting for piping when the component is selected for examination under Categories B-J or C-F, which is very difficult to comprehend. For bolting Categories B-G-1 and B-G-2 the existing notes require the examination of bolted connections in piping to be tied to components selected for examination under piping examination Category B-J. For bolting Category C-D, examination of bolted connections in piping is tied to piping examination Category C-F. These notes are confusing since it is difficult to limit examination of flange bolting in piping based on the piping welds selected for examination.

   Therefore, even though bolting inspection will be performed under a sample program (one connection of like connections), the change made by Code Case N-652 is more restrictive in that it will require examination of piping bolting regardless of when the piping is selected under other Categories.

4. Note 1 of Category B-G-2 was revised to state that visual examination of bolting is required only when the connection is disassembled or removed.

RELIEF REQUEST NUMBER: PRR-14
REVISION 0
(Page 4 of 10)

D. BASIS FOR RELIEF (cont'd)

Note 2 of Category B-G-2 was revised to clarify that visual examination of bolting for vessels, pumps, and valves is required only when the component is examined under Category B-B, B-L-2, or B-M-2. Reference to examination of bolting for piping was also removed as a new note (Note 6 in Code Case N-652) was added to address this.

The existing Section XI requires visual examination of this bolting when the component is "selected" for examination. Note 1 for Category B-G-2 of Code Case N-652 clarifies that examination is only required when the component is disassembled. It also clarifies that examination of any given bolted connection is required only once during the interval.

The existing Section XI Category B-G-2 Note 1 states that bolting may be examined in place under tension, when connection is disassembled, or when bolting is removed. This revision recognizes the fact that visual examination on bolting in place and under tension is not meaningful. Furthermore, the existing Section XI Category B-G-2 rules for piping do not tie the examination to disassembly of the connection as they do for heat exchangers, pumps, and valves.

Unlike volumetric examination, performing visual examinations of bolting while in place and under tension does not provide any meaningful information on the integrity of the bolting. Typically, the only portion of the bolting visible is the nuts and stud ends or the bolt head. Also, the only real degradation mechanism for flange bolting occurs when the connection is leaking. All Class 1 piping is subjected to a leakage test after each refueling outage and IWA-5000 already requires leaking flanges to be partially disassembled and the bolting to be examined for degradation. Performing a visual examination of bolting in place and under tension once every 10 years adds little value. This requirement is also inconsistent with the Class 1 rules for visual examination of bolting associated with heat exchangers pumps and valves, wherein the examination is tied to disassembly of the component. For these reasons it is more appropriate to tie the examination of bolted connections in piping to disassembly of the flange.

Compliance with the proposed alternatives described above will provide an adequate level of quality and safety for examination of the affected welds, and will not adversely impact the health and safety of the public.

E. ALTERNATIVE EXAMINATION

Bolting will be selected and examined in accordance with Code Case N-652. Specifically:

RELIEF REQUEST NUMBER: PRR-14
REVISION 0
(Page 5 of 10)

E. ALTERNATIVE EXAMINATION (cont'd)

1. In accordance with Code Case N-652, Category B-G-1, Note 2, a surface examination of bolts and studs per IWB-3515 may be substituted for volumetric examination when the bolts or studs are removed.

2. In accordance with Code Case N-652, Category B-G-1, Note 4, volumetric examinations may be conducted on one heat exchanger, one pump, or one valve among a group of heat exchangers, pumps, or valves that are similar in design, type, and function. In addition, when the component to be examined contains a group of bolted connections of similar design and size, such as flanged connections, examination may be conducted on one bolted connection among the group.

3. In accordance with Code Case N-652, Category B-G-1, Note 6; Category B-G-2, Note 3; and Category C-D, Note 4, examination of flanged piping bolting may be limited to one connection of a group of connections similar in design, size, function, and service.

4. In accordance with Code Case N-652, Category B-G-2, Note 1, bolting will only be examined when a connection is disassembled or the bolting is removed. (Effectively, the alternative only applies to piping bolting.)

F. IMPLEMENTATION SCHEDULE

Relief is requested for the Fourth Ten-Year Interval of the Pilgrim Station Inservice Inspection Program, beginning July 1, 2005.

G. PRECEDENTS

The NRC has granted similar relief to Entergy's Vermont Yankee Station (TAC No. MB8350).

H. ATTACHMENTS

1. Code Case N-652 (for information).

RELIEF REQUEST NUMBER: PRR-14
REVISION 0
(Page 6 of 10)

CASE
N-652

CASES OF ASME BOILER AND PRESSURE VESSEL CODE

Approval Date: August 14, 2001
See Numeric Index for expiration and any reaffirmation dates.

Case N-652
Alternative Requirements to Categories B-G-1, B-G-2, and C-D Bolting Examination Methods and Selection Criteria
Section XI, Division 1

Inquiry: What alternative requirements may be used in lieu of the examination methods and selection criteria of Table IWB-2500-1, Examination Categories B-G-1 and B-G-2, and Table IWC-2500-1, Examination Category C-D?

Reply: It is the opinion of the Committee that, as an alternative to the examination methods and selection criteria of, Table IWB-2500-1, Examination Categories B-G-1 and B-G-2, and Table IWC-2500-1, Examination Category C-D, Table 1, 2, and 3, respectively, may be used.

CASE (continued)
N-652

CASES OF ASME BOILER AND PRESSURE VESSEL CODE

TABLE 1
EXAMINATION CATEGORIES

EXAMINATION CATEGORY B-G-1, ALTERNATIVE RULES FOR PRESSURE RETAINING BOLTING, GREATER THAN 2 in. IN DIAMETER

Item No.	Parts Examined[1]	Examination Requirements/ Fig. No.	Examination Method[2]	Acceptance Standard	Extent and Frequency of Examinations: 1st Inspection Interval[3,4,5,6]	Extent and Frequency of Examinations: Successive Inspection Intervals[3,4,5,6]	Deferral of Examination to End of Interval
	Reactor Vessel				All bolts, studs, nuts, bushings, threads in flange stud holes	Same as for 1st interval	Permissible
B6.10	Closure Head Nuts	Surfaces	Visual, VT-1	IWB-3517			
B6.20	Closure Studs	IWB-2500-12	Volumetric	IWB-3515			
B6.40	Threads in Flange	IWB-2500-12	Volumetric	IWB-3515			
B6.50	Closure Washers, Bushings	Surfaces	Visual, VT-1	IWB-3517			
	Pressurizer				All bolts, studs, nuts, bushings and flange surfaces	Same as for 1st interval	Permissible
B6.60	Bolts and Studs	IWB-2500-12	Volumetric	IWB-3515			
B6.70	Flange Surface,[7] when connection disassembled	Surfaces	Visual, VT-1	IWB-3517			
B6.80	Nuts, Bushings, and Washers	Surfaces	Visual, VT-1	IWB-3517			
	Steam Generators				All bolts, studs, nuts, bushings, and flange surfaces	Same as for 1st interval	Permissible
B6.90	Bolts and Studs	IWB-2500-12	Volumetric	IWB-3515			
B6.100	Flange Surface,[7] when connection disassembled	Surfaces	Visual, VT-1	IWB-3517			
B6.110	Nuts, Bushings, and Washers	Surfaces	Visual, VT-1	IWB-3517			
	Heat Exchangers				All bolts, studs, nuts, bushings, and flange surfaces	Same as for 1st interval	Permissible
B6.120	Bolts and Studs	IWB-2500-12	Volumetric	IWB-3515			
B6.130	Flange Surface,[7] when connection disassembled	Surfaces	Visual, VT-1	IWB-3517			
B6.140	Nuts, Bushings, and Washers	Surfaces	Visual, VT-1	IWB-3517			

GENERAL NOTE: See Notes at end of Examination Category B-G-1.

TABLE 1
EXAMINATION CATEGORIES (CONT'D)

EXAMINATION CATEGORY 3-G-1, ALTERNATIVE RULES FOR PRESSURE RETAINING BOLTING, GREATER THAN 2 in. IN DIAMETER

Item No.	Parts Examined[1]	Examination Requirements/ Fig. No.	Examination Method[2]	Acceptance Standard	Extent and Frequency of Examinations: 1st Inspection Interval[3,4,5,6]	Extent and Frequency of Examinations: Successive Inspection Intervals[3,4,5,6]	Deferral of Examination to End of Interval
	Piping						
B6.150	Bolts and Studs	IWB-2500-12	Volumetric	IWB-3515	All bolts, studs, nuts, bushings, and flange surfaces	Same as for 1st interval	Permissible
B6.160	Flange Surface,[7] when connection disassembled	Surfaces	Visual, VT-1	IWB-3517			
B6.170	Nuts, Bushings, and Washers	Surfaces	Visual, VT-1	IWB-3517			
	Pumps						
B6.180	Bolts and Studs	IWB-2500-12	Volumetric	IWB-3515	All bolts, studs, nuts, bushings, and flange surfaces	Same as for 1st interval	Permissible
B6.190	Flange Surface,[7] when connection disassembled	Surfaces	Visual, VT-1	IWB-3517			
B6.200	Nuts, Bushings, and Washers	Surfaces	Visual, VT-1	IWB-3517			
	Valves						
B6.210	Bolts and Studs	IWB-2500-12	Volumetric	IWB-3515	All bolts, studs, nuts, bushings, and flange surfaces	Same as for 1st interval	Permissible
B6.220	Flange Surface,[7] when connection disassembled	Surfaces	Visual, VT-1	IWB-3517			
B6.230	Nuts, Bushings, and Washers	Surfaces	Visual, VT-1	IWB-3517			

NOTES:
(1) Bolting may be examined:
(a) in place under tension;
(b) when the connection is disassembled;
(c) when the bolting is removed.
(2) When bolts or studs are removed for examination, surface examination meeting the acceptance standards of IWB-3515 may be substituted for volumetric examination.
(3) Bushings and threads in base material of flanges are required to be examined only when the connections are disassembled. Bushings may be inspected in place.
(4) Volumetric examination of bolting for heat exchangers, pumps, or valves may be conducted on one heat exchanger, one pump, or one valve among a group of heat exchangers, pumps, or valves that are similar in design, type, and function. In addition when the component to be examined contains a group of bolted connections of similar design and size, such as flanged connections, the examination may be conducted on one bolted connection among the group.
(5) Visual examination of bolting for heat exchangers, pumps, or valves is required only when the componenet is examined under Examination Category B-B, B-L-2, or B-M-2. Examination of a bolted connection is required only once during the interval.
(6) The examination of flange bolting in piping systems may be limited to one bolted connection among a group of bolted connections that are similar in design, size, function, and service.
(7) Examination includes 1 in. annular surface of flange surrounding each stud.

CASE (continued)
N-652

CASES OF ASME BOILER AND PRESSURE VESSEL CODE

TABLE 2
EXAMINATION CATEGORIES

EXAMINATION CATEGORY B-G-2, ALTERNATIVE RULES FOR PRESSURE RETAINING BOLTING, 2 in. AND LESS IN DIAMETER							
Item No.	Parts Examined[1]	Examination Requirements/ Fig. No.	Examination Method	Acceptance Standard	Extent and Frequency of Examinations: 1st Inspection Interval[2,3]	Extent and Frequency of Examinations: Successive Inspection Interval[2,3]	Deferral of Examination to End of Interval
B7.10	Reactor Vessel Bolts, Studs, and Nuts	Surface	Visual, VT-1	IWB-3517	All bolts, studs, and nuts	Same as for 1st interval	Not permissible
B7.20	Pressurizer Bolts, Studs, and Nuts	Surface	Visual, VT-1	IWB-3517	All bolts, studs, and nuts	Same as for 1st interval	Not permissible
B7.30	Steam Generators Bolts, Studs, and Nuts	Surface	Visual, VT-1	IWB-3517	All bolts, studs, and nuts	Same as for 1st interval	Not permissible
B7.40	Heat Exchangers Bolts, Studs, and Nuts	Surface	Visual, VT-1	IWB-3517	All bolts, studs, and nuts	Same as for 1st interval	Not permissible
B7.50	Piping Bolts, Studs, and Nuts	Surface	Visual, VT-1	IWB-3517	All bolts, studs, and nuts	Same as for 1st interval	Not permissible
B7.60	Pumps Bolts, Studs, and Nuts	Surface	Visual, VT-1	IWB-3517	All bolts, studs, and nuts	Same as for 1st interval	Not permissible
B7.70	Valves Bolts, Studs, and Nuts	Surface	Visual, VT-1	IWB-3517	All bolts, studs, and nuts	Same as for 1st interval	Not permissible

NOTES:
(1) Bolting is required to be examined only when a connection is disassembled or bolting is removed.
(2) For vessels, pumps, or valves, examination of bolting is required only when the component is examined under Examination Category B-B, B-L-2, or B-M-2. Examination of a bolted connection is required only once during the interval.
(3) The examination of flange bolting in piping systems may be limited to one bolted connection among a group of bolted connections that are similar in design, size, function, and service. Examination is required only when the flange is disassembled. Examination of a bolted connection is required only once during the interval.

RELIEF REQUEST NUMBER: PRR-14
REVISION 0
(Page 10 of 10)

CASE (continued)
N-652

CASES OF ASME BOILER AND PRESSURE VESSEL CODE

TABLE 3
EXAMINATION CATEGORIES

EXAMINATION CATEGORY C-D, ALTERNATIVE RULES FOR PRESSURE RETAINING BOLTING GREATER THAN 2 in. IN DIAMETER						
Item No.	Parts Examined[1]	Examination Requirements/ Fig. No.	Examination Method[2]	Acceptance Standard	Extent of Examination[3,4,5]	Frequency of Examination[5]
C4.10	Pressure Vessels Bolts and Studs	IWC-2500-6	Volumetric	IWC-3513	100% bolts and studs at each bolted connection of components required to be inspected	Each inspection interval
C4.20	Piping Bolts and Studs	IWC-2500-6	Volumetric	IWC-3513	100% bolts and studs at each bolted connection of components required to be inspected	Each inspection interval
C4.30	Pumps Bolts and Studs	IWC-2500-6	Volumetric	IWC-3513	100% bolts and studs at each bolted connection of components required to be inspected	Each inspection interval
C4.40	Valves Bolts and Studs	IWC-2500-6	Volumetric	IWC-3513	100% bolts and studs at each bolted connection of components required to be inspected	Each inspection interval

NOTES:
(1) The examination may be performed on bolting in place under load or upon disassembly of the connection.
(2) When bolts or studs are removed for examination, surface examination meeting the acceptance standards of IWB-3515 may be substituted for volumetric examination.
(3) The examination of bolting for vessels, pumps, or valves may be conducted on one vessel, one pump, or one valve among a group of vessels, pumps, or valves that are similar in design, size, function, and service. In addition, when the component to be examined contains a group of bolted connections of similar design and size such as flange connections, or manway covers, the examination may be conducted on one bolted connection among the group.
(4) The examination of flange bolting in piping systems may be limited to one bolted connection among a group of bolted connections that are similar in design, size, function, and service.
(5) The areas selected for the initial examination shall be reexamined in the same sequence over the service lifetime of the component, to the extent practical.

RELIEF REQUEST NUMBER: PRR-15
REVISION 0
(Page 1 of 8)

A. COMPONENT IDENTIFICATION

A full structural weld overlay repair is proposed for the weldment associated with the following six (6) austenitic reactor pressure vessel (RPV) nozzle safe-end and dissimilar metal (DM) piping welds. This is proposed for contingency repair planning purposes and will only be used, if needed, during a refueling outage within the 4th ISI Interval.

WELD ID	DESCRIPTION	SYSTEM	MATERIAL	SIZE / WALL THICKNESS	DRAWING
2R-N2A-1	SAFE END TO NOZZLE	RPV	A-508 CL.2 NOZZLE FORGING, INCONEL 182 BUTTER, SA 182 F316 (Nuclear Grade C .020%max) SAFE END FORGING	13.38 in. dia. / 1.31 in.	ISI-I-2R-A
2R-N2B-1	SAFE END TO NOZZLE	RPV	A-508 CL.2 NOZZLE FORGING, INCONEL 182 BUTTER, SA 182 F316 (Nuclear Grade C .020%max) SAFE END FORGING	13.38 in. dia. / 1.31 in.	ISI-I-2R-A
2R-N2C-1	SAFE END TO NOZZLE	RPV	A-508 CL.2 NOZZLE FORGING, INCONEL 182 BUTTER, SA 182 F316 (Nuclear Grade C .020%max) SAFE END FORGING	13.38 in. dia. / 1.31 in.	ISI-I-2R-A
2R-N2H-1	SAFE END TO NOZZLE	RPV	A-508 CL.2 NOZZLE FORGING, INCONEL 182 BUTTER, SA 182 F316 (Nuclear Grade C .020%max) SAFE END FORGING	13.38 in. dia. / 1.31 in.	ISI-I-2R-B
2R-N2K-1	SAFE END TO NOZZLE	RPV	A-508 CL.2 NOZZLE FORGING, INCONEL 182 BUTTER, SA 182 F316 (Nuclear Grade C .020%max) SAFE END FORGING	13.38 in. dia. / 1.31 in.	ISI-I-2R-B
RPV-N9B-1	SAFE END TO NOZZLE	RPV	304 Stainless Steel	5" NPS / 0.625"	ISI-I-54-4

These are ISI Class 1 welds which fall within the scope of GL 88-01 and BWRVIP-75.

The weld overlay materials for the proposed repairs are as follows:

- For machine (GTAW) welding, the weld material will be ASME Section II, Part C, SFA 5-14 Filler Wire ER NiCrFe-7 UNS N06052 F-No. 43 known commercially as Alloy 52.
- For manual shielded metal arc weld (SMAW) welding, the weld material will be ASME Section II, Part C, SFA 5-11 Weld Electrode E NiCrFe-7 UNS W86152 known commercially as Alloy 152.

This relief is requested under the provisions of 10CFR50.55a(a)(3)(i), in that the proposed alternative would provide an acceptable level of quality and safety.

RELIEF REQUEST NUMBER: PRR-15
REVISION 0
(Page 2 of 8)

B. EXAMINATION AND REPAIR REQUIREMENTS

The weld overlays will be designed consistent with the requirements of NUREG-0313, (which was implemented by Generic Letter 88-01), ASME Code Cases N-504-2, N-638, and ASME, Section XI, Paragraph IWB-3640.

Welder Qualification and Welding Procedures

All welders and welding procedures will be qualified in accordance with ASME Section XI and any special requirements from Section XI or applicable code cases. If necessary, manual shielded metal arc weld (SMAW) procedure will be qualified to facilitate localized repairs and to provide a seal weld, prior to depositing the overlay. This procedure will make use of UNS W86152 SMAW electrodes consistent with the requirements of ASME Section XI. Personnel qualified in accordance with the Welding Procedure Specification (WPS) for welding Alloy 52/152 will perform the repair activities.

Welding Wire Material

A consumable welding wire highly resistant to intergranular stress corrosion cracking (IGSCC) will be used for the overlay material. This material, designated UNS N06052, is a nickel-based weld filler material, commonly referred to as Alloy 52, and will be applied using the gas tungsten arc welding (GTAW) process. Alloy 52 is identified as F-No. 43 Grouping for Ni-Cr-Fe, classification UNS N06052 Filler Metal. Alloy 52 contains about 30% chromium that imparts excellent corrosion resistance to this material. Alloy 152 welding wire may be used for manual (SMAW) seal welding activities.

Weld Overlay Design

The weld overlay will extend around the full circumference of the weldment location in accordance with NUREG-0313, Code Case N-504-2, Generic Letter 88-01, and BWRVIP-75. The overlay will be performed using a standard overlay design as described in NUREG-0313, Section 4.4.1. This design assumes a crack completely through the wall for 360°. The calculation methods for design of the overlay will be in accordance with NUREG-0313, Section 4.1.

The specific thickness and length will be computed according to guidance provided in ASME Section XI, Code Case N-504-2, and ASME Section XI, Paragraph IWB-3640, 1989 Edition. The overlay will completely cover any indication location and the existing Inconel 182 weld deposit butter with the highly corrosion resistant Alloy 52 material. In order to accomplish this objective, it is necessary to weld on the low alloy steel (LAS) material. A temper bead welding approach will be used for this purpose according to provisions of ASME Code Case N-638. This code case provides for machine gas tungsten-arc welding (GTAW) temper bead weld repairs to P No. 3 nozzle materials (SA 508 Cl. 2) at ambient temperature. The temper bead approach was selected because temper bead welding supplants the requirement for post weld heat treatment (PWHT) of heat-affected zones in welded LAS material.

RELIEF REQUEST NUMBER: PRR-15
REVISION 0
(Page 3 of 8)

B. EXAMINATION AND REPAIR REQUIREMENTS (cont'd)

The ASME Code Case N-638, General Requirements, 1(a) limits the maximum finished surface area of the weld overlay repair to 100 sq. in. The overlay repair (design and fabrication) on large diameter (13 and 29-inch OD) recirculation nozzle safe-end welds would exceed the 100 sq. in. limit and requires NRC approval for a maximum finished weld repair surface area up to 300 sq. in. on the basis of analysis in EPRI Technical Report 1003616, "Additional Evaluations to Extend Repair Limits for Pressure Vessels and Nozzles", dated March 2004. Susquehanna Station has used the EPRI Report as justification for recent nozzle weld overlay repairs. If the weld overlay necessary for a nozzle exceeds 300 sq. in., additional relief will be requested.

Examination Requirements

The repair, pre-service inspection (PSI), and in-service inspection (ISI) examinations of the weld overlay repair will be performed in accordance with the ISI Program and Plan along with NUREG-0313, Generic Letter 88-01, and approved plant procedures as specified by the ISI Repair / Replacement Program.

The weld overlay will be examined using the industry developed PDI procedure, as requested in PNPS 4th ISI Interval PRR-9 (Relief from ASME Code Section XI, Appendix VIII, Supplement 11, Qualification Requirements for Full Structural Overlaid Wrought Austenitic Piping Welds).

System leakage testing will be performed as allowed by Code Case N-416-2 with the additional condition that hold times specified in IWA-5213 (d) be observed, in lieu of the system hydrostatic test required by Code Case N-504-2. This complies with Regulatory Guide 1.147, Revision 13, relative to the NRC's conditional acceptance of Code Case N-416-2. The VT-2 inspections will be performed with the insulation removed from the locations where the proposed weld overlays are performed. This will allow a 10 minute hold before the VT-2 is performed.

The examinations and acceptance criteria, as identified below, will be in accordance with ASME Code, Section III, 1992 Edition, Subsection NB for Class 1 Components, ASME Code Section XI, 1989 Edition, and Code Cases N-504-2 and N-638.

A description of the required examinations for the weld overlay is provided in the following table:

Examination Description	Method	Technique	Reference
Weld Overlay Surface Area Preparation Exam	PT	Visible Dye	N-504-2
First Two Weld Overlay Layers Surface Exam	PT	Visible Dye	N-504-2

RELIEF REQUEST NUMBER: PRR-15
REVISION 0
(Page 4 of 8)

B. EXAMINATION AND REPAIR REQUIREMENTS (cont'd)

Examination Description	Method	Technique	Reference
First Two Weld Overlay Layers Thickness Measurements	UT or Mechanical	0° Long. UT or Mechanical Height Measurement	N-504-2
Completed Overlay Thickness Measurements	UT or Mechanical	0° Long. UT or Mechanical Height Measurement	N-504-2
Surface Exam of Final Overlay Surface and Adjacent Band within 1.5t (7/8" Band) of Weld Overlay. This also serves as Preservice Surface Examination of completed overlay.	PT	Visible Dye	NB-5350 IWB-3514 N-638 N-504-2
Volumetric Exam of Final Overlay and Adjacent Band within 1.5t (7/8" Band) of Weld Overlay. This also serves as Preservice Volumetric Examination of completed overlay.	UT	PDI Procedure	ASME 1995, Section XI Appendix VIII; ASME 1989 Section XI
Preservice Baseline Exam of Final Overlay Outer 25% of the Underlying Pipe Wall to Identify the Original Flaws.	UT	PDI Procedure	N-504-2

The acceptance criteria for the volumetric examinations shall be ASME Code Section XI Paragraph IWB-3514, "Standards for Examination Category B-F, Pressure Retaining Dissimilar Metal Welds, and Examination Category B-J, Pressure Retaining Welds in Piping".

It is noted that the curvatures of reactor nozzles require an exception to the ultrasonic inspection requirement for a 1.5t adjacent band volumetric examination at the end of the overlay on the nozzle end. The PT examination of this surface will constitute the acceptance testing for the overlay deposit.

RELIEF REQUEST NUMBER: PRR-15
REVISION 0
(Page 5 of 8)

B. EXAMINATION AND REPAIR REQUIREMENTS (cont'd)

Thickness will be characterized at four (4) azimuths representing each of the four (4) pipe quadrants. Thickness measurements may be determined using UT techniques or by mechanical measurement. Liquid penetrant examinations will be performed at the same stages of the overlay application as the thickness measurements identified above.

The alternative, as described below, provides an acceptable level of quality and safety while neither draining the reactor vessel nor applying preheat and post weld heat treatments.

C. ALTERNATIVE TO REPAIR REQUIREMENTS

The repair will utilize ASME Code Case N-504-2, "Alternative Rules for Repair of Class 1, 2, and 3 Austenitic Stainless Steel Piping," and Code Case N-638, "Similar and Dissimilar Metal Welding Using Ambient Temperature Machine GTAW Temper Bead Technique," with the following exceptions and clarifications.

Clarification of Code Case N-504-2 for Applicability to Nickel-Based Austenitic Alloy

Code Case N-504-2 was prepared specifically for austenitic stainless steel material. An alternate application to use nickel-based austenitic materials (i.e., Alloy 52) is requested due to the specific configuration of the nickel-based austenitic weldment.

Exception from Code Case N-504-2 Paragraph (b)

Code Case N-504-2 paragraph (b) requires that the reinforcement weld metal shall be low carbon (0.035 % maximum) austenitic stainless steel. In this application, a nickel-based filler is required and Alloy 52 has been selected in place of low carbon austenitic stainless steel.

Exception from Code Case N-504-2 Paragraph (e)

Code Case N-504-2 paragraph (e) requires as-deposited delta ferrite measurements of at least 7.5% for the weld reinforcement. These measurements have no meaning for nickel-based materials and will not be performed for these overlays.

Exception from Code Case N-504-2 Paragraph (h)

Code Case N-504-2 paragraph (h) requires a system hydrostatic test of completed repairs if the repaired flaw penetrated the original pressure boundary or if there is any observed indication of the flaw penetrating the pressure boundary during repairs. A system leak test of completed repairs may be used in lieu of a hydrostatic test.

Use of Code Case N-638 Applicability

Code Case N-638 shall be applied to the nozzle material.

RELIEF REQUEST NUMBER: PRR-15
REVISION 0
(Page 6 of 8)

C. ALTERNATIVE TO REPAIR REQUIREMENTS (cont'd)

Exception from Code Case N-638 Paragraph 1(a)

The Code case N-638, General Requirements, 1(a) limits the maximum finished surface area of the weld overlay repair to 100 sq. in. Relief is requested to extend the size of the repairs up to 300 sq. in. finished area to accommodate overlay repair on large diameter (13 and 29 -inch OD) recirculation nozzle safe-end welds.

D. BASIS FOR THE ALTERNATIVE

Clarification of Code Case N-504-2 for Applicability to Nickel-Based Austenitic Steel

The weldments being addressed are austenitic material having a mechanical behavior similar to austenitic stainless steel. The weldment is designed to be highly resistant to IGSCC and is compatible with the existing weldment and base metal materials. Accordingly, this alternative provides an acceptable level of quality and safety. Therefore, Code Case N-504-2 should be interpreted to apply equally to both materials.

Exception from Code Case N-504-2 Paragraph (b)

A consumable welding wire highly resistant to IGSCC was selected for the overlay material. This material, designated UNS N06052, is a nickel-based alloy weld filler material, commonly referred to as Alloy 52, and will be applied using the GTAW process. Alloy 52 contains about 30% chromium, which imparts excellent stress corrosion cracking resistance to this material. By comparison, Alloy 82 is identified as an IGSCC resistant material in NUREG 0313 and contains about 18 to 22% chromium while Alloy 182 has a nominal chromium composition of 13 to 17%. Alloy 52 with its high chromium content provides a high level of resistance to IGSCC consistent with the requirements of the code case. Therefore, this alternative provides an acceptable level of quality and safety.

Exception from Code Case N-504-2 Paragraph (e)

The composition of nickel-based Alloy 52 is such that delta ferrite is not formed during welding. Ferrite measurement requirements were developed for welding of 300 series stainless steels that required delta ferrite to develop corrosion resistance. Weld using Alloy 52 is 100% austenitic and contains no delta ferrite due to the high nickel composition (approximately 60% Ni and low iron content). Alloy 52 with its high chromium content provides a high level of resistance to hot cracking and IGSCC consistent with the purpose for the delta ferrite requirements for stainless steels of the code case. Therefore, this alternative provides an acceptable level of quality and safety.

Exception from Code Case N-504-2 Paragraph (h)

In lieu of the hydrostatic pressure test requirements defined in Code Case N-504-2, the required pressure test shall be performed in accordance with the Fourth Interval ISI Program Plan and Code

RELIEF REQUEST NUMBER: PRR-15
REVISION 0
(Page 7 of 8)

D. BASIS FOR THE ALTERNATIVE (cont'd)

Case N-416-2 with the exception that the volumetric examination performed shall be an ultrasonic examination of the weld overlay. These alternative requirements are sufficient to demonstrate that the overlay is of adequate quality to ensure the pressure boundary integrity. Accordingly, this alternative provides an acceptable level of quality and safety.

Use of Code Case N-638 Applicability

Code Case N-638 was developed for temper bead applications for similar and dissimilar metals. It permits the use of machine GTAW process at ambient temperature without the use of preheat or PWHT on Class 1, 2, and 3 components.

Temper bead welding methodology is not new. Numerous applications over the past decade have demonstrated the acceptability of temper bead technology in nuclear environments. Temper bead welding achieves heat affected zone (HAZ) tempering and grain refinement without subsequent PWHT. Excellent HAZ toughness and ductility are produced. Use of Code Case N-638 has been accepted in Regulatory Guide 1.147 Revision 13 as providing an acceptable level of quality and safety.

The overlay repair on large diameter (13 and 29-inch OD) recirculation nozzle safe-end welds would exceed the 100 sq. in. limit specified in Code Case N-638, paragraph 1(a). EPRI Technical Report 1003616, "Additional Evaluations to Extend Repair Limits for Pressure Vessels and Nozzles", dated March 2004, justifies extending the size of the temper bead repair finished area. The ASME Code Committees have recognized that the 100 sq. in. restriction on the overlay surface area is excessive and a draft code case, RRM-04, is currently being progressed within ASME Section XI to increase the area limit. Furthermore,
Three Mile Island and V. C. Summer have completed weld overlay repairs involving approximately 200 and 300 sq. inches respectively. Susquehanna Station in its Relief Request No.31 has used the EPRI Report, ASME proposed draft code case, V. C. Summer and Three Mile Island expanded repairs as justifications for recent expanded nozzle weld overlay repairs. As discussed in the EPRI Report, increasing the allowed areas for ambient temper bead repairs did not detrimentally change the residual stresses, thereby providing an acceptable level of quality and safety.

E. CONCLUSION

Weld overlays involve the application of weld metal circumferentially over and in the vicinity of the flawed weld to restore ASME Section XI margins as required by ASME Code Case N-504-2. Weld overlays have been used in the nuclear industry as an acceptable method to repair flawed weld. The use of overlay filler material that provides excellent resistance to IGSCC provides an effective barrier to crack extension.

RELIEF REQUEST NUMBER: PRR-15
REVISION 0
(Page 8 of 8)

E. CONCLUSION (cont'd)

The design of the overlay uses methods that are standard in the industry for size determination of pipe-to-pipe overlays. There are no new or different approaches used in these overlay designs that would be considered first of a kind or inconsistent with previous approaches. The overlay is designed as a full structural overlay in accordance with the recommendation of NUREG-0313, which was forwarded by Generic Letter 88-01, and Code Case N-504-2 and ASME Section XI Paragraph IWB-3640.

Temper bead techniques, as defined by Code Case N-638, will produce a tough corrosion resistant overlay deposit that meets or exceeds all code requirements for the weld overlay.

Pilgrim concludes that the contingency repair plan presents an acceptable level of quality and safety to satisfy the requirements of 10CFR50.55a(a)(3)(i). Similar proposed alternatives to the requirements of 10CFR50.55a(c)(3) have been previously approved by the NRC for James A Fitzpatrick (TAC No. MB0252, dated October 26, 2000), Duane Arnold Energy Center (NRC Staff's letter dated November 19, 1999), Nine Mile Point Unit 2 plant (NRC Staff's letter dated March 30,2000) and for Pilgrim to repair the RPV N10 nozzle to safe-end weld (3rd ISI Interval PRR-36 and 38).

F. DURATION OF THE PROPOSED ALTERNATIVE

The proposed alternative applies to the repairs of the identified RPV nozzle safe-end and piping welds for all scheduled refueling outages during the 4th ISI Interval and for the remaining service life of these welds. Re-inspection will be per BWRVIP-75 Guidelines.

G. PRECEDENTS

The six welds specified in this relief request (PRR-15) were not included in the NRC approved PRR-39, Rev. 2 from the 3rd ISI Interval (TAC No. MC2496). The weld overlay scope, examinations, and repair requirements for the six welds in PRR-15 are identical to that specified for the welds included in the approved PRR-39, Rev. 2.

PRR-39, Rev. 2 was approved for the current licensed life of the plant (2012); accordingly, PRR-39, Rev. 2 is carried forward to the 4th Interval for all the welds already approved in that relief request. Like PRR-39, 4th Interval PRR-15 is also a contingency repair plan for the specified welds.

H. ATTACHMENTS

None.

RELIEF REQUEST NUMBER: PRR-28
REVISION 1
(Page 1 of 13)

April 11, 2003

Mr. Mike Bellamy
Site Vice President
Entergy Nuclear Generation Company
Pilgrim Nuclear Power Station
600 Rocky Hill Road
Plymouth, MA 02360

SUBJECT: PILGRIM NUCLEAR POWER STATION - PILGRIM RELIEF REQUEST NO. 28, RELIEF FROM ASME CODE, SECTION XI, EXAMINATIONS OF REACTOR PRESSURE VESSEL CIRCUMFERENTIAL SHELL WELDS (TAC NO. MB6074)

Dear Mr. Bellamy:

By letter dated July 1, 2002, Entergy Nuclear Operations, Inc. (ENO, the licensee), submitted Pilgrim Relief Request (PRR)-28 requesting relief from American Society of Mechanical Engineers Boiler and Pressure Vessel Code (ASME Code), Section XI requirements related to examination of reactor pressure vessel circumferential shell welds at Pilgrim Nuclear Power Station. In response to the U.S. Nuclear Regulatory Commission staff's (NRC or the staff) request for additional information dated January 22, 2003, the licensee revised PRR-28 by letter dated February 3, 2003. The revised submittal, PRR-28, Revision 1, replaced the licensee's original request. The licensee submitted the request pursuant to Title 10 of the Code of Federal Regulations (10 CFR), Section 50.55a(a)(3)(i) and consistent with NRC Generic Letter (GL) 98-05, "Boiling Water Reactor Licensees Use of the BWRVIP-05 Report to Request Relief from Augmented Examination Requirements on Reactor Pressure Vessel Circumferential Shell Welds," as a proposed alternative to the requirements of ASME Code, Section XI.

The staff has reviewed the request against the requirements of ASME Code, Section XI, 1989 Edition, Subsection IWB, Table IWB 2500-1, Examination Category B-A, Item No. B1.11, the augmented examination requirements of 10 CFR 50.55a(g)(6)(ii)(A)(2), and the guidance of GL 98-05. The results of the review are documented in the enclosed Safety Evaluation.

The licensee's letter requested relief from the ASME Code, Section XI requirements pursuant to 10 CFR 50.55a(a)(3)(i). However, the applicable requirements for proposing alternatives related to augmented reactor shell weld examinations are contained in 10 CFR 50.55a(g)(6)(ii)(A)(5). The staff has reviewed your request, and, based on the information provided, concludes that the proposed alternative will provide an acceptable level of quality and safety for the remaining portion of the initial license period that expires in 2012. Therefore, the proposed alternative is authorized pursuant to 10 CFR 50.55a(g)(6)(ii)(A)(5).

M. Bellamy - 2-

If you have any questions, please contact Travis Tate at (301) 415-8474.

Sincerely,

/RA by JBoska for/

James W. Clifford, Chief, Section 2
Project Directorate I
Division of Licensing Project Management
Office of Nuclear Reactor Regulation

Docket No. 50-293

Enclosure: Safety Evaluation

cc w/encl: See next page

RELIEF REQUEST NUMBER: PRR-28
REVISION 1
(Page 3 of 13)

Pilgrim Nuclear Power Station

cc:

Resident Inspector
U. S. Nuclear Regulatory Commission
Pilgrim Nuclear Power Station
Post Office Box 867
Plymouth, MA 02360

Chairman, Board of Selectmen
11 Lincoln Street
Plymouth, MA 02360

Chairman, Duxbury Board of Selectmen
Town Hall
878 Tremont Street
Duxbury, MA 02332

Office of the Commissioner
Massachusetts Department of
Environmental Protection
One Winter Street
Boston, MA 02108

Office of the Attorney General
One Ashburton Place
20th Floor
Boston, MA 02108

Dr. Robert M. Hallisey, Director
Radiation Control Program
Commonwealth of Massachusetts
Executive Offices of Health and
Human Services
174 Portland Street
Boston, MA 02114

Regional Administrator, Region I
U. S. Nuclear Regulatory Commission
475 Allendale Road
King of Prussia, PA 19406

John M. Fulton
Assistant General Counsel
Pilgrim Nuclear Power Station
600 Rocky Hill Road
Plymouth, MA 02360-5599

Mr. Mike Bellamy
Site Vice President
Entergy Nuclear Operations, Inc.
Pilgrim Nuclear Power Station
600 Rocky Hill Road
Plymouth, MA 02360

Mr. C. Stephen Brennion
Licensing Superintendent
Pilgrim Nuclear Power Station
600 Rocky Hill Road
Plymouth, MA 02360-5599

Mr. Jack Alexander
Manager, Reg. Relations and Quality Assurance
Pilgrim Nuclear Power Station
600 Rocky Hill Road
Plymouth, MA 02360-5599

Mr. David F. Tarantino
Nuclear Information Manager
Pilgrim Nuclear Power Station
600 Rocky Hill Road
Plymouth, MA 02360-5599

Ms. Jane Perlov
Secretary of Public Safety
Executive Office of Public Safety
One Ashburton Place
Boston, MA 02108

Mr. Stephen J. McGrail, Director
Attn: James Muckerheide
Massachusetts Emergency Management Agency
400 Worcester Road
Framingham, MA 01702-5399

Chairman
Nuclear Matters Committee
Town Hall
11 Lincoln Street
Plymouth, MA 02360

RELIEF REQUEST NUMBER: PRR-28
REVISION 1
(Page 4 of 13)

Pilgrim Nuclear Power Station

cc:

Mr. William D. Meinert
Nuclear Engineer
Massachusetts Municipal Wholesale
Electric Company
P.O. Box 426
Ludlow, MA 01056-0426

SAFETY EVALUATION BY THE OFFICE OF NUCLEAR REACTOR REGULATION

ALTERNATIVES FOR EXAMINATION OF REACTOR PRESSURE VESSEL SHELL WELDS

PILGRIM NUCLEAR POWER STATION

ENTERGY NUCLEAR GENERATION COMPANY

DOCKET NO. 50-293

1.0 INTRODUCTION

By letter dated July 1, 2002, Entergy Nuclear Operations, Inc. (ENO, the licensee), submitted Pilgrim Relief Request (PRR)-28 requesting relief from American Society of Mechanical Engineers Boiler and Pressure Vessel Code (ASME Code), Section XI, requirements related to examination of reactor pressure vessel (RPV) circumferential shell welds at Pilgrim Nuclear Power Station (Pilgrim). In response to the U.S. Nuclear Regulatory Commission (NRC) staff's request for additional information dated January 22, 2003, the licensee revised PRR-28 by letter dated February 3, 2003. The revised submittal, PRR-28, Revision 1, replaced the licensee's original request.

The relief request would authorize the use of a proposed alternative to the RPV shell welds examination requirements of ASME Code, Section XI, for the remaining portion of the initial license period that expires in 2012.

2.0 REGULATORY EVALUATION

2.1 Applicable Requirements

Title 10 of the *Code of Federal Regulations* (10 CFR), Section 50.55a(g)(4), requires that ASME Code Class 1, 2, and 3 components must meet the requirements set forth in ASME Code, Section XI, "Rules for Inservice Inspection of Nuclear Power Plant Components," to the extent practical within the limitations of design, geometry and materials of construction of the components.[1] The regulations require that all inservice examinations and system pressure tests conducted during the first 10-year interval and subsequent intervals comply with the requirements in the latest edition and addenda of ASME Code, Section XI, incorporated by reference in 10 CFR 50.55a(b) on the date 12 months prior to the start of the 10-year interval. For Pilgrim, the 1989 Edition to ASME Code, Section XI, is the applicable edition for the current 10-year inservice inspection (ISI) interval.

1. Except for design and access provisions and preservice inspection requirements.

10 CFR 50.55a(g)(6)(ii)(A)(2) requires that all licensees augment their reactor vessel examination by implementing once, as part of the ISI interval in effect on September 8, 1992, the examination requirements for reactor vessel shell welds specified in Item No. B1.10, Examination Category B-A, "Pressure Retaining Welds in Reactor Vessel," Table IWB-2500-1 to Section XI. Additionally, 10 CFR 50.55a(g)(6)(ii)(A)(2) requires that the examinations cover essentially 100 percent of the RPV shell welds. Both Examination Category B-A and 10 CFR 50.55a(g)(6)(ii)(A)(2) define "essentially 100-percent" examination as covering 90 percent or more of the examination volume of each weld. The schedule for implementation of the augmented inspection is dependent upon the number of months remaining in the 10-year ISI interval that was in effect on September 8, 1992.

Alternatives to requirements may be authorized or relief granted by the NRC pursuant to 10 CFR 50.55a(a)(3)(i), 10 CFR 50.55a(a)(3)(ii), 10 CFR 50.55a(g)(6)(i) or 10 CFR 50.55a(g)(6)(ii)(A)(5). In proposing alternatives or requesting relief from the augmented reactor shell weld examinations under 50.55a(g)(6)(ii)(A), the licensee must demonstrate that the proposed alternatives provide an acceptable level of quality and safety. Pursuant to 10 CFR 50.55a(g)(4)(iv), ISI items may meet the requirements set forth in subsequent editions and addenda of the ASME Code that are incorporated by reference in 10 CFR 50.55a(b), subject to the limitations and modifications listed therein, and subject to Commission approval. Portions of editions and addenda may be used provided that related requirements of the respective editions and addenda are met.

The licensee submitted the request pursuant to 10 CFR 50.55a(a)(3)(i) and consistent with NRC Generic Letter (GL) 98-05, "Boiling Water Reactor (BWR) Licensees Use of the BWR Vessel and Internals Project (BWRVIP)-05 Report to Request Relief from Augmented Examination Requirements on Reactor Pressure Vessel Circumferential Shell Welds," dated November 10, 1998, as a proposed alternative to the requirements of ASME Code, Section XI. However, the applicable requirements for proposing alternatives related to augmented reactor vessel shell weld examinations are contained in 10 CFR 50.55a(g)(6)(ii)(A)(5). The licensee's proposed alternative is also consistent with the staff's safety evaluation report (SER), on EPRI Technical Report TR-105697, "Boiling Water Reactor Vessel and Internals Project, BWR Reactor Pressure Vessel Shell Weld Inspection Recommendations (BWRVIP-05)," issued July 28, 1998.

2.2 BWRVIP-05 Report

By letter dated September 28, 1995, as supplemented by letters dated June 24 and October 29, 1996, and May 16, June 4, June 13 and December 18, 1997, and January 13, 1998, the BWRVIP, submitted the proprietary report BWRVIP-05. As modified, the BWRVIP report proposed to reduce the scope of inspection of BWR RPV welds from essentially 100 percent of all RPV shell welds to examination of essentially 100 percent of the axial (i.e., longitudinal) welds and essentially zero percent of the circumferential RPV shell welds, except at the intersection of the axial and circumferential welds, thereby including approximately 2-3 percent of the circumferential welds. In addition, the report provided proposals to revise ASME Code requirements for successive and additional examinations of circumferential welds, provided in paragraph IWB-2420(b) of Section XI of the ASME Code.

On July 28, 1998, the NRC staff issued an SER on the BWRVIP-05 report. This evaluation concluded that the failure frequency of RPV circumferential welds in BWRs was sufficiently low

to justify elimination of ISI of these welds. In addition, the evaluation concluded that the BWRVIP proposals on successive and additional examinations of circumferential welds were acceptable. The evaluation indicated that examination of the circumferential welds shall be performed if axial weld examinations reveal an active, mechanistic mode of degradation.

In the BWRVIP-05 report, the BWRVIP concluded that the conditional probabilities of failure for BWR RPV circumferential welds are orders of magnitude lower than that of the longitudinal welds. As a part of its review of the report, the NRC conducted an independent risk-informed, probabilistic fracture mechanics assessment of the results presented in the BWRVIP-05 report. The staff's assessment conservatively calculated the conditional probability of failure from RPV axial and circumferential welds during the (current) initial 40-year license period and at conditions approximating an 80-year vessel lifetime for a BWR nuclear plant, as indicated respectively in Tables 2.6-4 and 2.6-5 of the staff's July 28, 1998, SER. The failure frequency for a reactor pressure vessel is calculated as the product of the frequency for the critical (limiting) transient event and the conditional probability of failure for the weld.

The staff determined the conditional probability of failure for longitudinal and circumferential welds in BWR vessels fabricated by Chicago Bridge and Iron (CB&I), Combustion Engineering (CE), and Babcock and Wilcox (B&W). The analysis identified a cold over-pressure event in a foreign reactor as the limiting event for BWR RPVs, with the pressure and temperature from this event used in the probabilistic fracture mechanics calculations. The staff estimated that the probability for the occurrence of the limiting over-pressurization transient was 1 x io per reactor year. For each of the vessel fabricators, Table 2.6-4 of the staff's SER identifies the conditional failure probabilities for the plant-specific conditions with the highest projected reference temperature (for that fabricator) after the initial 40-year license period.

2.3 GL 98-05

On November 10, 1998, the NRC issued GL 98-05 which stated that BWR licensees may request permanent (i.e., for the remaining term of operation under the existing, initial, license) relief from the ISI requirements of 10 CFR 50.55a(g) for the volumetric examination of circumferential reactor pressure vessel welds (ASME Code Section XI, Table IWB-2500-I, Examination Category B-A, Item No. B1.11, "Circumferential Shell Welds"), upon demonstrating that:

(1) At the expiration of the license, the circumferential welds will continue to satisfy the limiting conditional failure probability for circumferential welds in the NRC staff's July 28, 1998, safety evaluation, and

(2) Licensees have implemented operator training and established procedures that limit the frequency of cold over-pressure events to the amount specified in the NRC staff's July 28, 1998, safety evaluation.

Licensees would still need to perform the required inspections of "essentially 100 percent" of all axial welds.

3.0 TECHNICAL EVALUATION

3.1 Code Requirement for which Relief is Requested

The licensee requested relief from the requirements of ASME Code, Section XI, 1989 Edition, Subsection IWB, Table IWB 2500-1, Examination Category B-A, Item No. B1.11. In addition, the augmented examination requirements of 10 CFR 50.55a(g)(6)(ii)(A)(2) requires volumetric examination of essentially 100 percent of RPV circumferential weld and base material regions in the RPV each inspection interval.

3.1.1 Component(s) for which Relief is Requested

The requested relief from the Table IWB 2500-1 requirements applies to:

"ISI Class 1, Code Category B-A, "Pressure Retaining Welds in Reactor Vessel," Item B1.11, "Circumferential Shell Welds"

3.2 Licensee's Proposed Alternative to the ASME Code

Pursuant to the alternative provisions in 10 CFR 50.55a(a)(3)(i), and in compliance with the GL 98-05 provisions in the BWRVIP-05 safety evaluation, in its February 3, 2003 letter, the licensee proposed the following for the remaining portion of the initial operating license period that expires in 2012:

All longitudinal (axial) RPV shell welds, Code Item B1.11, will be examined to the extent possible. If less than 90% coverage is achieved, we shall request additional relief. In addition, essentially 1 to 3% of the incidental intersecting circumferential welds will be examined during refueling outage (RFO)-14 and/or RFO-15 (Third ISI interval).

3.3 Licensee's Bases for Alternative

The licensee states:

Pursuant to 10 CFR 55.55(a)(3)(i), and consistent with information contained in NRC Generic Letter 98-05, Pilgrim is requesting an alternative from ASME [Code,] Section XI requirements to examine essentially 100% of accessible Category B-A circumferential welds and is proposing permanent relief (for the remaining portion of the initial license period) from these examinations.

Pilgrim completed the first augmented RPV shell weld examination in 1995 during RFO 10. Refer to BECO [Boston Edison Co.] Letter 95-099. This examination included both horizontal and vertical RPV shell weld[s] to the extent possible and detected no flaws within the criteria of ASME [Code, Section] XI[,] IWB-3500.

Consistent with the NRC Generic Letter 98-05[,] the following is provided.

1. At expiration of license, the circumferential welds will continue to satisfy the limiting conditional failure probability for circumferential welds in the staffs July 30, 1998 safety [evaluation]. The NRC evaluation of BWRVIP-05 utilized

the FAVOR code to perform a probabilistic fracture mechanics analysis to estimate RPV failure probabilities. Although BWRVIP-05 provides the technical basis supporting the relief request, the following information is provided that shows Pilgrim['s] vessel is enveloped by the NRC analysis.

Pilgrim RPV Shell Weld Information
Bounding Circumferential Weld (1-344)
Wire Heat/Lot (21935/3869)

Parameter Description	Pilgrim RPV Shell Bounding Beltline 32 EFPY Bounding Comparative Parameters (Bounding Circumferential, Weld)	USNRC Limiting 32 EFPY Bounding CE Vessel Parameters SER Table 2.6-4
Neutron fluence at the end of the requested relief period (upper bound value @ ¼ t)	8.03×10^{17} n/cm^2	2.0×10^{18} n/cm^2
Initial (unirradiated) reference temperature (RT_{NDT}), °F	-50	0
Weld Chemistry Factor (CE), °F	172.2	172.2
Weld Copper content %	0.183	0.183
Weld Nickel content %	0.704	0.704
Increase in reference temperature (ΔRT_{NDT}), °F	64.5	98.1
Mean adjusted reference temperature (ART), °F $RT_{NDT(u)} + \Delta RT_{NDT}$	14.5	98.1

2. Pilgrim has implemented Operator training and established procedures that limit the frequency of cold over-pressure events to the amount specified in the staffs July 30, 1998 safety evaluation.

3.4 Evaluation

As described previously, CL 98-05 provides two criteria that BWR licensees requesting relief from ISI requirements of 10 CFR 50.55a(g) for the volumetric examination of circumferential RPV welds (ASME Code, Section XI, Table IWB-2500-1, Examination Category B-A, Item No. B1.11, Circumferential Shell Welds) must satisfy. These criteria are intended to demonstrate that the conditions at the applicant's plant are bounded by those in the safety

evaluation. The staff has reviewed the licensee's regulatory and technical analyses described in Attachments 1 and 2 of the February 3, 2003, submittal to determine if the licensee's proposed alternative inspection provides an acceptable level of quality and safety.

3.4.1 Circumferential Weld Conditional Failure Probability

The staff's SER for the BWRVIP-05 report evaluated the conditional failure probability of circumferential welds for the limiting plant-specific case of BWR RPVs manufactured by different vendors, including CE, using the highest mean irradiated RT_{NDT} to determine the limiting case. Since the Pilgrim RPV was fabricated by CE, the licensee compared the mean irradiated RT_{NDT} for Pilgrim to that for the limiting CE case described in Table 2.6-4 of the staff's SER for the BWRVIP-05 report. As indicated in the licensee's evaluation, the mean RT_{NDT} for Pilgrim is lower than that for the limiting CE case; therefore, the licensee concluded that the conditional failure probability for the Pilgrim circumferential welds is bounded by the conditional failure probabilities in the staff's SER through the end of the current license period.

The staff's SER provides a limiting conditional failure probability of 6.34×10^{-5} per-reactor-year for a limiting plant-specific mean RT_{NDT} of 98.1 °F for CE-fabricated RPVs. Comparing the information in the NRC Reactor Vessel Integrity Database with that submitted in the proposed relief request, the staff confirmed that the mean RT_{NDT} of the circumferential welds at Pilgrim is projected to be 14.5 °F at the end of the current license. In this evaluation, the chemistry factor, ΔRT_{NDT}, and mean RT_{NDT} were calculated consistent with the guidelines of Regulatory Guide (RG) 1.99, Revision 2. The calculated value of mean RT_{NDT} for the circumferential welds at Pilgrim is significantly lower than that for the limiting plant-specific case for CE-fabricated RPVs, indicating that the conditional failure probability of the Pilgrim circumferential welds is much less than 6.34×10^{-5} per-reactor-year.

The regulatory requirements for fluence calculations are defined in General Design Criteria (GDCs) 30 and 31, as established in Appendix A to 10 CFR Part 50. Additionally, in March 2001, the staff augmented those GDCs by issuing RG 1.190. As a result, when issuing License Amendment No. 190, dated April 13, 2001 (ML011060046), the staff noted that Pilgrim's plant-specific calculations for the original fluence value were outdated. The staff concluded that fluence calculations are acceptable if they are done with approved methodologies or other methods that are shown to adhere to the guidance of RG 1.190.

In regard to this relief request, the staff also evaluated the impact of the licensee's projected fluence value on Pilgrim's circumferential weld conditional failure probability since the calculation does not comply with the guidance of RG 1.190. The staff verified the licensee's input parameters and performed fluence calculations using the limiting CE vessel mean RT_{NDT}. The staff determined that the licensee's plant-specific calculations for the fluence value would have to be a factor of 10 higher to exceed the limiting case for CE-fabricated RPVs. Although the staff believes the licensee's fluence value calculation is outdated, the staff does not believe performing the fluence calculation in accordance with RG 1.190 would increase the licensee's estimate by a factor of 10. Therefore, the staff concludes that the licensee's fluence calculation does not significantly impact the calculated value of mean RT_{NDT} for the circumferential welds at Pilgrim and that the mean RT_{NDT} would remain below the limiting case for CE-fabricated vessels.

3.4.2 Cold Over-pressure Transient Probability

To satisfy the second condition of GL 98-05 regarding a cold over-pressure event, the licensee provided its analysis of the high-pressure injection sources, administrative controls, and operator training.

High-Pressure Injection Sources

The licensee assessed the systems that could lead to a cold over-pressurization of the Pilgrim RPV. These include the high-pressure core injection (HPCI), the reactor core isolation cooling (RCIC) system, the feedwater system, the condensate system, the standby liquid control (SLC) system, the low-pressure coolant injection (LPCI) system, the core spray (CS) system, the residual heat removal (RHR) system, the control rod drive (CRD) system, and the reactor water clean-up (RWCU) system. The licensee stated that the HPCI and RCIC systems use steam driven turbines to pump cold water into the vessel. During cold shutdown conditions, no steam is available to operate these systems; therefore, they could not cause a cold over-pressure event.

The feedwater/condensate systems are a potential source of high-pressure injection into the reactor vessel. The condensate pumps are a source of water to the reactor feed pumps. The reactor feed pumps are the high pressure makeup system during normal operation. The licensee's evaluation considered the availability of automatic trips of the condensate/feedwater systems on high vessel water level. Additionally, the licensee indicated that during refueling outages the feedwater lines are isolated by closing block valves inside the drywell. The feedwater regulating valves are also removed from service once the plant is at low power (approximately 10 percent). Controls on pressure and temperature are imposed by startup and cool down procedures which limit the capacity of the condensate/feedwater systems to inject water with reactor coolant temperature below 450 °F. The licensee concluded the potential for over-pressurization associated with feedwater/condensate systems is not significant.

The SLC system is an additional high-pressure source. However, there are no automatic starts associated with the SLC system. The system requires operator action to manually start the system by a key-lock switch; therefore, inadvertent manual initiation of SLC is an unlikely event. Additionally, in the event of manual initiation during shutdown, the maximum SLC injection rate of approximately 40 gpm would allow operators sufficient time to control reactor pressure. Procedures have been developed for operation of the SLC system and operators are trained on the system operation. The licensee concluded that the SLC does not present a significant potential for over-pressurization.

The licensee indicated that the LPCI, CS, and RHR systems operate at pressures below 400 psig. The pressure-temperature (P-T) limits permit pressures up to 310 psig at temperatures from 70 °F to 100 °F. At 100 °F, the permitted pressure increases rapidly to 660 psig. The shutoff head pressure for a CS pump is nominally 350 psig and a RHR pump is nominally 332 psig. Since these systems could pressurized the RPV to greater than 310 psig, the licensee evaluated the potential for over-pressurization associated with the LPCI, RHR, and CS operating modes.

During emergency situations, following a loss of shutdown cooling, an alternate shutdown cooling mode is permitted which uses a CS pump to circulate water from the condensate

storage tanks through the reactor vessel and safety relief valve (SRV) discharge lines to the torus. In this mode, the SRV control solenoids are energized allowing the SRV main discharge to open at 50 psig and coolant to exit the reactor vessel and flow to the torus. This mode of operation is permitted only when the P-T limits can be maintained and prevents the reactor pressure from exceeding 310 psig. Interlocks are in place to prevent flow into the reactor vessel during normal testing of the LPCI and CS with reactor pressure above 400 psig. During testing under shutdown conditions, an inadvertent injection of the LPCI or CS would be detected by operators and alarm of the reactor vessel level annunciator before exceeding 310 psig, and the injection would be terminated. Reactor head vents are administratively controlled to remain open until the reactor coolant temperature is greater than 212 °F and the vessel metal temperatures are acceptable for critical core operations. The reactor head vents prevent reactor vessel pressurization above 310 psig until operator action when using the RHR or CS pumps for reactor vessel fill from a cold and vented condition. Reactor head vents also prevent over-pressurization when using a CS pump for reactor vessel and cavity fill during an outage because the head vents open when the vessel is filled to the flange. Procedures are in place to limit injection during full-flow testing of the CS injection check valves under shutdown conditions. The procedures instruct operators to minimize reactor vessel level rise and the injection duration is limited to that which indicates a reactor vessel level change. These administrative actions prevent reactor pressure from exceeding 310 psig. While utilizing the shutdown-cooling mode of the RHR system, design interlocks close the suction valves from the reactor when pressure is greater than 70 psig. Closure of these suction valves will trip the running RHR pump and prevent over-pressurization. The licensee concluded the LPCI, CS, and RHR systems do not present a significant potential for over-pressurization.

During normal cold shutdown conditions, RPV level and pressure are controlled with the CRD system and the RWCU system using a "feed and bleed" process. The licensee has procedures in place to reduce the likelihood of a violation of the P-T limits, such as requiring the opening of the head vent valves after the reactor has been cooled to less than 220 °F. In addition, the slow injection rate of the CRD system (50 gpm) and the RWCU system (222 gpm) under these conditions, would allow the operator sufficient time to react to unanticipated changes in RPV level. During the RPV pressure test, procedural guidance is provided to allow operators to administratively monitor the RPV pressure and temperature while controlling CR0 and RWCU injection to assure a smooth, controlled method of increasing or decreasing pressure while the vessel temperature is being maintained above the required P-T limits. The licensee concluded that the CRD and RWCU systems do not present a significant potential for over-pressurization.

The staff has reviewed the licensee's assessment of systems that could lead to a cold over-pressurization of the RPV. Based on this assessment, the staff determined that the licensee has adequately identified systems that could cause a cold over-pressurization event. In addition, the staff determined that the licensee has implemented operator training and established procedures to limit the potential for a cold over-pressure event associated with the systems. Therefore, the staff concludes that the licensee's assessment of high-pressure injection sources satisfy the criteria of GL 98-05.

Operating Training and Work Control Process

The licensee stated that procedures and administrative controls for reactor temperature, water level, and pressure are in place to minimize the potential for RPV cold over-pressure events. In all cases, operators are trained in methods of controlling water level within specified limits in

RELIEF REQUEST NUMBER: PRR-28
REVISION 1
(Page 13 of 13)

- 9 -

addition to responding to abnormal water level conditions during shutdown. Plant-specific procedures have been established to provide guidance to the operators regarding compliance with P-T limits.

The licensee indicated that, during plant outages, work control procedures ensure that outage schedules and changes to schedules receive a risk assessment review commensurate with their safety significance. Additionally, individuals involved in work activity attend pre-job briefings that include discussions of expected plant responses and contingency actions which address unexpected conditions or responses that may be encountered.

The licensee concluded that the probability of a low temperature RPV over-pressure is bounded by that used in the staff's SE.

The staff has reviewed the licensee's evaluation of a cold over-pressure event. In particular, the staff reviewed the licensee's evaluation of the high-pressure injection sources, and its discussion of the operator training and work control process. Based on the implementation of operator training and establishment of procedures, the staff concludes that the licensee has provided an acceptable demonstration that the criteria in GL 98-05 is satisfied in regard to a cold over-pressure event.

4.0 CONCLUSION

The NRC staff has reviewed the licensee's submittal and finds that the licensee has provided an acceptable demonstration that the appropriate criteria in GL 98-05 and the staff's evaluation of the BWRVIP-05 report have been satisfied regarding permanent relief (i.e., for the remaining portion of the initial license period) from ISI requirements of ASME Code, Section XI, Table IWB-2500-1, Examination Category B-A, Item No. B1.11, for the volumetric examination of RPV circumferential welds.

The staff concludes that the licensee's proposed alternative examination is authorized pursuant to 10 CFR 50.55a(g)(6)(ii)(A)(5) for the remaining portion of the initial license period that expires in 2012, on the basis that the alternative provides an acceptable level of quality and safety.

All other requirements of the ASME Code, Section III and XI for which relief has not been specifically requested remain applicable, including third party review by the Authorized Nuclear Inservice Inspector.

Principal Contributors: S. Wall
T. Tate

Date: April 11, 2003

RELIEF REQUEST NUMBER: PRR-39
REVISION 2
(Page 1 of 16)

April 12, 2005

Mr. Michael R. Kansler, President
Entergy Nuclear Operations, Inc.
440 Hamilton Avenue
White Plains, NY 10601

SUBJECT: PILGRIM NUCLEAR POWER STATION - PILGRIM RELIEF REQUEST PRR-39 ALTERNATIVE CONTINGENCY REPAIR PLAN FOR REACTOR PRESSURE VESSEL NOZZLE SAFE-END AND DISSIMILAR METAL PIPING WELDS USING ASME CODE CASES N-638 AND N-504-2 WITH EXCEPTIONS (TAC NO. MC2496)

Dear Mr. Kansler:

By letter dated March 15, 2004, as supplemented by letters dated October 12, 2004, and March 16, 2005, Entergy Nuclear Operations, Inc. (Entergy) requested relief from certain requirements of the American Society of Mechanical Engineers Boiler and Pressure Vessel Code (ASME Code), Section XI, pertaining to flaw removal, heat treatment, and nondestructive examination at the Pilgrim Nuclear Power Station (PNPS). Specifically, Entergy requested that the Nuclear Regulatory Commission (NRC) review and approve Pilgrim Relief Request (PRR) No. 39, "Alternative Contingency Repair Plan for Reactor Pressure Vessel Nozzle Safe-end and Dissimilar Metal Piping Welds."

The proposed PRR uses the weld overlay method based on the methodology of the ASME Code, Section XI, Code Case N—504-2, "Alternative Rules for Repair of Class 1, 2, and 3 Austenitic Stainless Steel Piping," and Code Case N—638, "Similar and Dissimilar Metal Welding Using Ambient Temperature Machine GTAW [gas tungsten arc weld] Temper Bead Technique." PRR-39 is related to the repair of reactor pressure vessel nozzle safe-end welds and dissimilar metal piping welds in the core spray and recirculation systems.

The NRC staff has reviewed the proposed alternatives. The results of this review are provided in the enclosed safety evaluation. The NRC staff has concluded that the proposed alternatives to ASME Code requirements provided in PRR-39 provide reasonable assurance of structural integrity, and an acceptable level of quality and safety. Therefore, pursuant to Title 10 of the Code of Federal Regulations, Section 50.55a(a)(3)(i), the NRC staff authorizes the use of ASME Code Case N-504-2, as modified, and the use of ASME Code Case N-638, to perform weld overlay repairs at PNPS for the third 10-year inservice inspection interval.

All other ASME Code, Section XI requirements for which relief was not specifically requested and approved in this relief request remain applicable, including third-party review by the Authorized Nuclear Inservice Inspector.

M. Kansler - 2 -

If you have any questions regarding this approval, please contact the PNPS Project Manager, John Boska, at 301-415-2901.

Sincerely,

/RA by Victor Nerses for/

Darrell J. Roberts, Chief, Section 2
Project Directorate I
Division of Licensing Project Management
Office of Reactor Regulation

Docket No. 50-293

Enclosure: As stated

cc w/encl: See next page

RELIEF REQUEST NUMBER: PRR-39
REVISION 2
(Page 3 of 16)

Pilgrim Nuclear Power Station

cc:

Regional Administrator, Region I
U. S. Nuclear Regulatory Commission
475 Allendale Road
King of Prussia, PA 19406-1415

Senior Resident Inspector
U. S. Nuclear Regulatory Commission
Pilgrim Nuclear Power Station
Post Office Box 867
Plymouth, MA 02360

Chairman, Board of Selectme
11 Lincoln Street
Plymouth, MA 02360

Chairman
Nuclear Matters Committee
Town Hall
11 Lincoln Street
Plymouth, MA 02360

Chairman, Duxbury Board of Selectmen
Town Hall
878 Tremont Street
Duxbury, MA 02332

Office of the Commissioner
Massachusetts Department of
Environmental Protection
One Winter Street
Boston, MA 02108

Office of the Attorney General
One Ash burton Place
20th Floor
Boston, MA 02108

Director, Radiation Control Program
Commonwealth of Massachusetts
Executive Offices of Health and
Human Services
174 Portland Street
Boston, MA 02114

Secretary of Public Safety
Executive Office of Public Safety
One Ashburton Place
Boston, MA 02108

Director, Massachusetts Emergency Management
Agency
Attn: James Muckerheide
400 Worcester Road
Framingham, MA 01702-5399

Mr. William D. Meinert Nuclear Engineer
Massachusetts Municipal Wholesale Electric
Company
P.O. Box 426
Ludlow, MA 01056-0426

Mr. Michael A. Balduzzi Site Vice President
Entergy Nuclear Operations, Inc.
Pilgrim Nuclear Power Station
600 Rocky Hill Road
Plymouth, MA 02360-5508

Mr. Stephen J. Bethay
Director, Nuclear Assessment
Entergy Nuclear Operations, Inc.
Pilgrim Nuclear Power Station
600 Rocky Hill Road
Plymouth, MA 02360-5508

Mr. Bryan S. Ford
Manager, Licensing
Entergy Nuclear Operations, Inc.
Pilgrim Nuclear Power Station
600 Rocky Hill Road
Plymouth, MA 02360-5508

Mr. David F. Tarantino
Nuclear Information Manager
Pilgrim Nuclear Power Station
600 Rocky Hill Road
Plymouth, MA 02360-5508

Pilgrim Nuclear Power Station

cc:

Mr. Gary J. Taylor
Chief Executive Officer
Entergy Operations
1340 Echelon Parkway
Jackson, MS 39213

Mr. John T. Herron
Sr. VP and Chief Operating Officer
Entergy Nuclear Operations, Inc.
440 Hamilton Avenue
White Plains, NY 10601

Mr. Oscar Limpias
Vice President, Engineering
Entergy Nuclear Operations, Inc.
440 Hamilton Avenue
White Plains, NY 10601

Mr. Brian O'Grady
Vice President, Operations Support
Entergy Nuclear Operations, Inc.
440 Hamilton Avenue
White Plains, NY 10601

Mr. John F. McCann
Director, Nuclear Safety Assurance
Entergy Nuclear Operations, Inc.
440 Hamilton Avenue
White Plains, NY 10601

Ms. Charlene D. Faison
Manager, Licensing
Entergy Nuclear Operations, Inc.
440 Hamilton Avenue
White Plains, NY 10601

Mr. Michael J. Colomb
Director of Oversight
Entergy Nuclear Operations, Inc.
440 Hamilton Avenue
White Plains, NY 10601

Mr. John M. Fulton
Assistant General Counsel
Entergy Nuclear Operations, Inc.
440 Hamilton Avenue
White Plains, NY 10601

Ms. Stacey Lousteau
Treasury Department
Entergy Services, Inc.
639 Loyola Avenue
New Orleans, LA 70113

Mr. James Sniezek
5486 Nithsdale Drive
Salisbury, MD 21801

Mr. Kenneth L. Graesser
38832 N. Ashley Drive
Lake Villa, IL 60046

Mr. Ronald Toole
1282 Valley of Lakes
Box R-10
Hazelton, PA 18202

Ms. Deb Katz, Executive Director
Nuclear Security Coalition
c/o Citizens Awareness Network
Box 83
Shelburne Falls, MA 01370

SAFETY EVALUATION BY THE OFFICE OF NUCLEAR REACTOR REGULATION

RELIEF REQUEST FOR REPAIR OF SAFE-END AND DISSIMILAR WELDS

OF REACTOR VESSEL NOZZLES

ENTERGY NUCLEAR OPERATIONS, INC

PILGRIM NUCLEAR POWER STATION

DOCKET NO. 50-293

1.0 INTRODUCTION

By letter dated March 15, 2004, as supplemented by letters dated October 12, 2004, and March 16, 2005, Entergy Nuclear Operations, Inc. (Entergy) requested relief from certain requirements of the American Society of Mechanical Engineers Boiler and Pressure Vessel Code (ASME Code), Section XI, pertaining to flaw removal, heat treatment, and nondestructive examination (NDE) at the Pilgrim Nuclear Power Station (PNPS). Specifically, Entergy requested that the Nuclear Regulatory Commission (NRC or the Commission) review and approve Pilgrim Relief Request (PRR) No. 39, "Alternative Contingency Repair Plan for Reactor Pressure Vessel Nozzle Safe-End and Dissimilar Metal Piping Welds."

The proposed PRR uses the weld overlay method based on the methodology of the ASME Code, Section XI, Code Case N-504-2, "Alternative Rules for Repair of Class 1, 2, and 3 Austenitic Stainless Steel Piping," and Code Case N-638, "Similar and Dissimilar Metal Welding Using Ambient Temperature Machine GTAW [gas tungsten arc weld] Temper Bead Technique." PRR-39 is related to the repair of reactor pressure vessel nozzle safe-end welds and dissimilar metal piping welds in the core spray and recirculation systems.

2.0 REGULATORY EVALUATION

The inservice inspection (ISI) of the ASME Code Class 1, 2, and 3 components is to be performed in accordance with Section XI of the ASME Code and applicable edition and addenda as required by Title 10 of the *Code of Federal Regulations* (10 CFR) Section 50.55a(g), except where specific written relief has been granted by the Commission pursuant to 10 CFR 50.55a(g)(6)(i). Section 50.55a(a)(3) of 10 CFR states, in part, that alternatives to the requirements of paragraph (g) may be used, when authorized by the NRC, if Entergy demonstrates that: (i) the proposed alternatives would provide an acceptable level of quality and safety, or (ii) compliance with the specified requirements would result in hardship or unusual difficulty without a compensating increase in the level of quality and safety.

Enclosure

- 2 -

Pursuant to 10 CFR 50.55a(g)(4), ASME Code Class 1 2, and 3 components (including supports) will meet the requirements, except the design and access provisions and the preservice examination requirements, set forth in ASME Code, Section XI, "Rules for Inservice Inspection of Nuclear Power Plant Components," to the extent practical within the limitations of design, geometry, and materials of construction of the components. The regulations require that inservice examinations of components and system pressure tests conducted during the first 10-year ISI interval, and subsequent intervals, comply with the requirements in the latest edition and addenda of Section XI of the ASME Code, incorporated by reference in 10 CFR 50.55a(b), 12 months prior to the start of the 120-month interval, subject to the limitations and modifications listed therein. The ISI code of record for PNPS's third 10-year ISI interval, which began on July 1, 1995, and ends on June 30, 2005, is the 1989 Edition of the ASME Code, Section XI.

3.0 LICENSEE'S PROPOSED ALTERNATIVE

3.1 Components for Which Relief is Requested

Entergy proposed a full structural weld overlay repair for the austenitic reactor vessel nozzle safe-end and dissimilar metal piping welds in the core spray and recirculation systems as shown in the table below. This request is applicable for the welds which fall within the scope of Generic Letter (GL) 88-01, "NRC Position on IGSCC [intergranular stress-corrosion cracking] in BWR [boiling-water reactor] Austenitic Stainless Steel Piping," and BWRVIP-75, "BWR Vessel and Internals Project Technical Basis for Revisions to GL 88-01 Inspection Schedules."

WELD IDENTIFICATION	DESCRIPTION	SYSTEM
14-A-1	Safe-End to Nozzle	Core Spray
14-B-1	Safe-End to Nozzle	Core Spray
2R-N1B-1	Safe-End to Nozzle	Recirculation
2R-N2D-1	Safe-End to Nozzle	Recirculation
2R-N2E-1	Safe-End to Nozzle	Recirculation
2R-N2F-1	Safe-End to Nozzle	Recirculation
2R-N2G-1	Safe-End to Nozzle	Recirculation
2R-N2J-1	Safe-End to Nozzle	Recirculation
14-A-3	Pipe to Reducer	Core Spray
14-B-3	Pipe to Reducer	Core Spray
14-A-10A	Valve to Pipe	Core Spray
14-B-10A	Valve to Pipe	Core Spray

3.2 Code Requirements for which Relief is Requested

Entergy will design the weld overlay consistent with the requirements of NUREG-0313 which was implemented by GL 88-01; ASME Code Section XI, Code Cases N-504-2 and N-638; and ASME Code Section XI, Paragraph IW8-3640. Entergy will follow the examination and acceptance criteria in accordance with ASME Code Section III, 1992 Edition, subsection NB for class 1 components; ASME Code Section XI, 1989 Edition; and ASME Code Cases N-504-2 and N-638.

3.3 Welder Qualification and Welding Procedures

Entergy stated that all welders and welding procedures will be qualified in accordance with ASME Code Section XI, and any special requirements from Section XI or applicable code cases. If necessary, a manual shielded metal arc weld procedure will be qualified to facilitate localized repairs and to provide a seal weld, prior to depositing the overlay. This procedure uses UNS W86152 shielded metal arc weld electrodes consistent with the requirements of ASME Code Section XI. Personnel qualified in accordance with the welding procedure specification for welding Alloy 52/152 will perform the repair activities.

3.4 Welding Wire Material

Entergy stated that for machine GTAW, the weld material is ASME Code Section II, Part C, SFA 5-14 Filler Wire ER Nickel-Chromium-Iron-7 UNS N06052 F-No. 43, known commercially as Alloy 52. This weld material is resistant to IGSCC. Alloy 52 contains about 30% chromium and is corrosion resistant.

For manual shielded metal arc weld welding, the weld material is ASME Code Section II, Part C, SFA 5-11 Weld Electrode E Nickel-Chromium-Iron-7 UNS W86152, known commercially as Alloy 152.

3.5 Weld Overlay Design

Entergy stated that the weld overlay will extend around the full circumference of the weldment location in accordance with NUREG-0313, ASME Code Case N-504-2, GL 88-01, and BWRVIP-75. The overlay will be performed using a standard overlay design as described in NUREG-0313, Section 4.4.1. This design assumes a crack completely through the pipe wall for 360 degrees in circumferential extent. The calculation methods for design of the overlay will be in accordance with NUREG-0313, Section 4.1. The specific thickness and length will be computed according to ASME Code Section XI, Code Case N-504-2, and ASME Code Section XI, Paragraph IWB-3640, 1989 Edition.

The overlay will completely cover any indication location and the existing Inconel 182 weld deposit butter with the corrosion-resistant Alloy 52 material. In order to accomplish this objective, it is necessary to weld on the low alloy steel material. A temper bead welding approach will be used for this purpose according to provisions of ASME Code Case N-638. This code case provides requirements for weld repair using machine GTAW based on the temper bead process of P No. 3 nozzle materials (SA 508, Class 2) at ambient temperature. Entergy selected the temper bead approach because temper bead welding supplants the

requirement for post-weld heat treatment of heat-affected zones in welded low alloy steel material.

ASME Code Case N-638, paragraph 1(a), limits the maximum finished surface area of the weld overlay repair to 100 square inches. The overlay repair (design and fabrication) on large diameter (13 and 29-inch outside diameter) recirculation nozzle safe-end welds would exceed the 100 square-inch limit and requires NRC approval for a maximum finished weld repair surface area up to 300 square inches on the basis of analysis in Electric Power Research Institute (EPRI) Technical Report 1003616, "Additional Evaluations to Extend Repair Limits for Pressure Vessels and Nozzles", dated March 2004. Susquehanna Station has used the EPRI Report as justification for recent nozzle weld overlay repairs. If the weld overlay necessary for a nozzle exceeds 300 square inches, additional relief will be requested.

3.6 Examination Requirements

Entergy stated that the repair, preservice inspection, and ISI examinations of the weld overlay repair will be performed in accordance with the ISI program and plan along with NUREG-0313, GL 88-01, and plant procedures as specified by its Inservice Inspection Repair/Replacement Program. The weld overlay will be examined using the industry-developed performance demonstration initiative (PDI) procedure, which the staff approved in PNPS PRR-38 on February 26, 2004.

Entergy will perform system leakage testing as allowed by ASME Code Case N-416-2 with the additional condition that hold times specified in IWA-5213(d) be observed, in lieu of the system hydrostatic test required by ASME Code Case N-504-2. This complies with Regulatory Guide (RG) 1.147, Revision 13, relative to the NRC's conditional acceptance of Code Case N-416-2. Entergy will perform the VT-2 visual inspection with the insulation removed from the locations where the proposed weld overlays are performed. This will allow a 10-minute hold before the VT-2 visual inspection is performed.

The examinations and acceptance criteria will follow ASME Code Section III, 1992 Edition, Subsection NB for Class I Components; ASME Code Section XI, 1989 Edition; and ASME Code Cases N-504-2 and N-638. Entergy proposed the following examinations for the weld overlay:

RELIEF REQUEST NUMBER: PRR-39
REVISION 2
(Page 9 of 16)

- 5 -

EXAMINATION DESCRIPTION	METHOD	TECHNIQUE	REFERENCE
Weld overlay surface area preparation exam	Penetrant Test (PT)	Visible Dye	N-504-2
First two weld overlay layers surface exam	PT	Visible Dye	N-504-2
First two weld overlay layers thickness measurements	Ultrasonic Test (UT) or Mechanical	0° Longitudinal UT or Mechanical Height Measurement	N-504-2
Completed overlay or thickness measurements	UT or Mechanical	0° Longitudinal UT or Mechanical Height Measurement	N-504-2
Surface exam of final overlay surface and adjacent band within 1.5t (7/8" band) of weld overlay. This also serves as preservice surface examination of completed overlay.	PT	Visible Dye	NB-5350 IWB-3514 N-638 N-504-2
Volumetric exam of final overlay and adjacent band within 1.5t (7/8" band) of weld overlay. This also serves as preservice volumetric examination of completed overlay.	UT	PDI Procedure	ASME Code 1995, Section XI Appendix VIII; ASME Code 1989 Section XI
Preservice baseline exam of final overlay outer 25% of the underlying pipe wall to identify the original flaws.	UT	PDI Procedure	N-504-2

The acceptance criteria for the volumetric examinations shall be ASME Code Section XI Paragraph IWB-3514, "Standards for Examination Category B-F, Pressure Retaining Dissimilar Metal Welds, and Examination Category B-J, Pressure Retaining Welds in Piping".

Entergy noted that the curvatures of reactor nozzles require an exception to the ultrasonic inspection requirement for a 1.5t (7/8-inch band) adjacent band volumetric examination at the end of the overlay on the nozzle end. The liquid penetrant examination of this surface will constitute the acceptance testing for the overlay deposit. Thickness will be characterized at four azimuths representing each of the four pipe quadrants. Thickness measurements may be

determined using ultrasonic techniques or by mechanical measurement. Liquid penetrant examinations will be performed at the same stages of the overlay application as the thickness measurements identified above.

3.7 Licensee's Proposed Alternative and Associated Basis

For the proposed repair, Entergy will use ASME Code Case N-504-2 and ASME Code Case N-638 with the following exceptions and clarifications.

Clarification of ASME Code Case N-504-2 *for Applicability to Nickel-Based Austenitic Alloy*

ASME Code Case N-504-2 was prepared specifically for austenitic stainless steel material. An alternate application to use nickel-based austenitic materials (i.e., Alloy 52) is requested due to the specific configuration of the nickel-based austenitic weldment.

Basis: The weldment being addressed is austenitic material having a mechanical behavior similar to austenitic stainless steel. The weldment is designed to be highly resistant to IGSCC and is compatible with the existing weldment and base metal materials. ASME Code Case N-504-2 should be interpreted to apply equally to both weldment and base metal materials.

Exception from ASME Code Case N-504-2 *Paragraph (b)*

ASME Code Case N-504-2 paragraph (b) requires that the reinforcement weld metal shall be low carbon (0.035% maximum) austenitic stainless steel. In the proposed application, a nickel- based filler is required and Alloy 52 has been selected in place of low carbon austenitic stainless steel.

Basis: Entergy selected a consumable welding wire resistant to IGSCC for the overlay material. This material, designated UNS N06052, is a nickel-based alloy weld filler material, commonly referred to as Alloy 52, and will be applied using the GTAW process. Alloy 52 contains about 30% chromium that provides stress corrosion cracking resistance to this material. By comparison, Alloy 82 is identified as an IGSCC-resistant material in NUREG-0313 and contains about 18 to 22% chromium, while Alloy 182 has a nominal chromium composition of 13 to 17%. Alloy 52, with its high chromium content, provides a high level of resistance to IGSCC consistent with the requirements of the code case.

Exception from ASME Code Case N-504-2 Paragraph (e)

ASME Code Case N-504-2 paragraph (e) requires as-deposited delta ferrite measurements of at least 7.5% for the weld reinforcement. These measurements have no meaning for nickel-based weld materials and will not be performed for this overlay.

Basis: The composition of nickel-based Alloy 52 is such that delta ferrite is not formed during welding. Ferrite measurement requirements were developed for welding of 300 series stainless steels that required delta ferrite to develop corrosion resistance. The Alloy 52 weld is 100% austenitic and contains no delta ferrite due to the high nickel composition (approximately 60% nickel and low iron content). The Alloy 52 weld, with its high chromium content, provides a high

level of resistance to hot cracking and IGSCC. This characteristic is consistent with the purpose for the delta ferrite requirements for stainless steels of the code case.

Exception from ASME Code Case N-504-2 Paragraph (h)

ASME Code Case N-504-2 paragraph (h) requires a system hydrostatic test of completed repairs if the repaired flaw penetrated the original pressure boundary or if there is any observed indication of the flaw penetrating the pressure boundary during repairs. A system leak test of completed repairs will be used in lieu of a hydrostatic test.

Basis: In lieu of the hydrostatic pressure test requirements defined in ASME Code Case N-504-2, Entergy stated that the required pressure test shall be performed in accordance with the third interval ISI program and plan and ASME Code Case N-416-2 with the exception that the volumetric examination performed shall be an ultrasonic examination of the weld overlay.

Exception from ASME Code Case N-638 Paragraph 1(a)

ASME Code Case N-638 paragraph 1(a) limits the maximum finished surface area of the weld overlay repair to 100 square inches. Relief is requested to extend the size of the repairs up to a 300 square-inch finished area to accommodate overlay repair on large diameter (13 and 29- inch outside diameter) recirculation nozzle safe-end welds.

Basis: Entergy stated that ASME Code Case N-638 was developed for temper bead applications to similar and dissimilar metals. It permits the use of machine GTAW at ambient temperature without the use of preheat or post-weld heat treatment on ASME Code Class 1, 2, and 3 components.

Numerous applications over the past decade have demonstrated the acceptability of temper bead technology in nuclear environments. Temper bead welding achieves heat-affected zone tempering and grain refinement without subsequent post-weld heat treatment. Excellent heat affected zone toughness and ductility are produced. The use of ASME Code Case N-638 has been accepted in RG 1.147, Revision 13, as providing an acceptable level of quality and safety.

The overlay repair on large diameter (13 and 29-inch outside diameter) recirculation nozzle safe-end welds would exceed the 100 square inch limit specified in ASME Code Case N-638, paragraph 1(a). EPRI Technical Report 1003616 justifies extending the size of the temper bead repairs up to a 500 square-inch finished area. Entergy stated that the ASME Code Committees has recognized that the 100 square inches on the overlay surface area is too restrictive and a draft code case, RRM-04, is currently being processed within ASME Code Section XI to increase the area limit to 500 square inches.

3.8 Duration of the Proposed Alternative

Entergy stated that the proposed alternative applies to the repairs of reactor pressure vessel nozzle safe-end and piping welds for the scheduled outage and for the remaining service life of the welds. Re-inspection of the welds will be conducted in accordance with the guidelines in BWRVIP-75.

RELIEF REQUEST NUMBER: PRR-39
REVISION 2
(Page 12 of 16)

- 8 -

4.0 TECHNICAL EVALUATION

The staff evaluated the following issues:

1. The staff asked Entergy to discuss: (1) whether hydrogen water chemistry in BWRVIP-75 has been implemented in the primary water system to mitigate the potential of stress corrosion cracking in the recirculation and core spray piping at PNPS; (2) whether there have been any chemical intrusions which have occurred in the primary water system that would affect the welds in the proposed PRR; and (3) whether corrective actions have been implemented to minimize the chemical intrusions.

In its October 12, 2004, letter, Entergy responded that PNPS has maintained an average hydrogen water chemistry availability of 90.7% for the past five operating cycles since June 1993. The hydrogen water chemistry availability for the current operating cycle (15) is 93.0%. Hydrogen water chemistry availability should be 80% or greater for the weld inspection interval for a moderate hydrogen water chemistry plant in accordance with the staff's safety evaluation report for BWRVIP-75.

Only one chemical intrusion from a condensate polisher in December 2000 has occurred while above 200 degrees F. Entergy included this intrusion in the hydrogen water chemistry availability calculation. The intrusion was due to a failed condensate polisher lateral and under- drain. This problem was subsequently corrected for all the condensate polishers by a redesign of the laterals and under-drains. A review of the welds in PRR-39 showed that six safe-end-to- nozzle welds receive protection from hydrogen water chemistry. The six core spray welds are not protected by hydrogen water chemistry; however, Entergy will inspect the six core spray welds every 6 years in accordance with the guidelines in BWRVIP-75. The welds in recirculation systems that are protected by the hydrogen water chemistry will be inspected every 10 years.

The staff finds Entergy's management of those welds affected by water chemistry acceptable because Entergy follows the inspection frequency specified in BWRVIP-75. The periodic inspection provides adequate monitoring of potential degradation in the affected welds.

2. In PRR-39, Entergy specified that either UT or mechanical height measurement will be used to measure the thickness of the weld overlay. The staff asked Entergy to discuss the subsection in ASME Code Case N-504-2 that specifies these measurement requirements and which method will most likely be used in terms of reliability, sensitivity, and accuracy.

In its October 12, 2004, letter, Entergy responded that ASME Code Case N-504-2, paragraphs (c) and (g) provide examination requirements to verify the integrity of the weld overlay. A PT will be performed on the area to be welded in accordance with ASME Code Section III, NB Sections, 1992 Edition. If localized seal welding is required, this examination will be performed after the localized seal welding is completed. A final PT, in accordance with ASME Code Section III, NB Sections, 1992 Edition, and ASME Code Section XI, 1989 Edition, will be performed after completing all weld overlays.

- 9 -

ASME Code Case N-504-2 does not specify the method for measuring overlay thickness. A thickness examination using UT will be performed to demonstrate that the weld overlay meets the thickness requirements of the repair plan. UT is the preferred method for determining the thickness of the weld overlay. Mechanical measurements are included as an alternative to UT where suitable reference surfaces are available. If for any reason the UT method is not used to provide thickness data, mechanical measurements will be used where a suitable reference surface is available. Both methods provide reliable and accurate thickness measurement results, but the UT method is more sensitive to the surface roughness and requires a smooth surface for the UT probe. The final examination, in addition to a VT-2 visual inspection, will be a volumetric examination based on PDI/UT procedures in accordance with PRR-38.

Entergy will perform UT of the weld overlay volume to demonstrate that the repair volume is unflawed and meets thickness requirements of the design following application of the repair. Since the weld repair material is resistant to ongoing crack propagation and provides compressive residual stress, this examination assures continued integrity and adequacy of the weld overlay.

The staff finds that Entergy provides an acceptable strategy because it considered both UT and mechanical measurements in the measurement of weld overlay thickness.

3. In Sections C and D of PRR-39, Entergy stated that the system leakage test is adequate to ensure the pressure boundary integrity. However, ASME Code Case N-504-2, paragraph (h) specifies that if a flaw penetrates the original pressure boundary prior to or during the welding operation, a system hydrostatic test shall be performed. If the system pressure boundary has not been penetrated, a system leakage, in-service, or functional test shall be performed. ASME Code Case N-416-2 allows a system leakage test in lieu of a hydrostatic pressure test in weld repairs if an NDE is performed in accordance with the 1992 Edition of ASME Code Section III, which specifies that radiographic examination be performed.

Considering the above, the staff asked Entergy to: (a) Clarify whether a radiographic examination will be performed on the weld repair per the 1992 Edition of ASME Code Section III, if a flaw penetrates the pressure boundary prior to or during the welding process. If a radiographic examination will not be performed, discuss the basis and justify the performance of a ultrasonic examination in lieu of a radiographic examination of the weld overlay repair; (b) Discuss the technical basis why the system leakage test is adequate as compared to a hydrostatic test in demonstrating the structural integrity of the weld overlay repair; and (c) Discuss whether a system leakage test will be performed after each completed repair.

In response to Item (a), Entergy stated that the overlay welding would be examined to Supplement 11 as modified by PRR-38 for specific PDI procedures. The qualified procedures are in accordance with the ultrasonic acceptance standards included in ASME Code Section III NB-5330. The ultrasonic procedures and personnel used for this examination result in a weld material assessment for an overlay that cannot be achieved by radiography. This is based on the special nature of the weld overlay, which is similar to that recognized in ASME Code Section III NB-5270 "Special Welds" and the allowance as described in NB-5279 that there are special exceptions requiring ultrasonic rather than radiographic examinations. Pressure vessel and safe-end welded piping are filled with reactor water, which precludes use of radiography for

weld material assessment. Removal of fuel and draining the vessel to accommodate radiography presents additional nuclear safety and personal hazards. Radiography is not qualified under PDI for weld overlay inspections. Thus, UT under the PDI examination is the preferred method for weld method assessment. The qualification process for the Supplement 11 ultrasonic examination, the ability to size flaws for length and depth, and the fact that the qualification includes flaws that may be created during fabrication, meets the ultrasonic procedural requirements of the cited ASME Code Section III paragraphs.

The final weld examination would be a complete UT using EPRI PDI procedures in accordance with PRR-38. The weld overlay would meet the requirements of the ASME Code Section XI repair plan and PDI procedures. There would be no deviations from ASME Code Section III 1992 methods, as discussed above, and acceptance criteria or PDI and UT procedures.

ASME Code Section XI allows a repair to be performed by either removing a flaw or reducing it to an acceptable size, as documented in ASME Code Case N-504-2. The weld overlay approach does the latter. The allowable flaw size is defined in Table IWB-3641-1 of ASME Code Section XI. The initial flaw is conservatively assumed to be entirely through-wall and to extend entirely around the circumference of the repair location (through-wall x 360 degrees around). The weld overlay approach applies additional thickness to the flawed location, such that the repaired component meets the requirements of IWB-3640. This approach has been extensively used since the mid-1980's in repair of piping in BWRs. The weld overlay also imparts a compressive residual stress, which has been shown to reduce crack growth.

The weld overlay repairs will be completed using ASME Code Case N-504-2 for the repair design, fabrication, and examination methods applicable to a structural overlay type of repair. This type of repair is not included in ASME Code Section III. The NDE of weld overlays is not addressed in ASME Code Section III because Section III is a construction code used for the initial installation of welded joints. Welding performed under an ASME Code Section XI repair plan is typically examined in accordance with the code of construction, when applicable, and any Section XI baseline (preservice) ISI examinations.

For weld overlay repairs, the repair rules are provided by ASME Code Case N-504-2 which states that the required examinations are by the liquid penetrant and ultrasonic methods. This ASME Code Case is prescriptive about all aspects of the weld overlay repair including the overlay design, its fabrication, and the examinations performed before, during, and after the welding.

The type of weld examinations to be performed on the structural overlay weld would be based on ASME Code Case N-504-2, rather than ASME Code Section III, such that the required volumetric examination of weld overlay would be by the ultrasonic rather than radiographic method. An initial liquid penetrant examination would be performed on the area to be welded in accordance with ASME Code Case N-504-2. This examination will be performed, if required, after the localized seal welding is completed. A final liquid penetrant examination, in accordance with N-504-2 and ASME Code Section III 1992, would be performed after completing all weld overlay layers. An ultrasonic thickness examination will also be performed to demonstrate that the weld overlay met the thickness requirements of the repair plan.

RELIEF REQUEST NUMBER: PRR-39
REVISION 2
(Page 15 of 16)

- 11 -

The staff finds that Entergy provided sufficient basis to justify the use of liquid PT and UT in lieu of radiographic examination.

In response to Items (b) and (c), Entergy stated that the pressure test requirements in ASME Code Case N-504-2 are consistent with ASME Code Section XI Subarticle IWA-4700 "Pressure Test" rules that are applicable to all pressure boundary weld repairs performed under Section XI.

ASME Code Case N-416-2 is routinely used to allow a system leakage test to be performed in lieu of a system hydrostatic pressure test in most cases of weld repairs to existing piping, pump, and valve components at PNPS and other plants, including repairs that entirely replace components or penetrate the pressure boundary. ASME Code Case N-416-2 requires NDE be performed on welded repairs, fabrication and installation joints in accordance with the methods and acceptance criteria of the applicable Subsection of the 1992 Edition of Section III. As discussed above, the staff has determined that the performance of an ultrasonic examination in lieu of radiographic examination of the overlay is acceptable. Therefore, PNPS's use of AMSE Code Case N-416-2, which allows system leakage testing in accordance with IWA-5000 at nominal operating pressure and temperature, in lieu of a hydrostatic testing, continues to be acceptable.

4. Entergy stated that re-inspection of the welds will be conducted in accordance with the guidance in BWRVIP-75. The staff asked Entergy to (a) discuss the exact inspection schedule for the welds in the proposed relief request, identify the page, category, and section in BWRVIP-75 that discusses the inspection schedule that the licensee will follow; and (b) discuss the inspection method that will be used in the re-inspection of the welds.

In the October 12, 2004, letter, Entergy responded that PNPS intends to inspect any overlaid dissimilar welds in accordance with the requirements for Category E overlaid welds as described in Table 3-1 and Section 3.5.1.1 of BWRVIP-75, which states, in part, that "...For weld overlays applied in the future, a preservice examination followed by an inservice examination within three outages is required..." After this initial inservice examination within three outages of the repair, the inspection schedule would then revert to the sample frequency shown in Table 3-1 of BWRVIP-75, i.e., either 25% or 10% every 10 years depending on water chemistry classification. The re-inspection of the welds will be conducted using VT-2 visual inspection and volumetric ultrasonic testing of the PDI process in the re-inspection of the welds.

The staff finds that Entergy's response is acceptable because it will follow the appropriate inspection schedule and criteria of BWRVIP-75.

5. Entergy stated that the proposed alternative applies to the repairs of reactor pressure vessel nozzle safe-end and piping welds for the remaining service life of the welds, meaning to the end of the operating license of the plant. In general, the staff approves relief requests for only one inspection interval within certain fixed calendar dates. The staff requested Entergy to: (a) identify which inspection interval(s) this relief request will be applicable; (b) identify the current inspection interval; and (c) provide the end date of the operating license of the plant and the starting and end dates of the 3rd and 4th inspection intervals.

RELIEF REQUEST NUMBER: PRR-39
REVISION 2
(Page 16 of 16)

- 12 -

In the October 12, 2004, letter, Entergy responded that PNPS is in the third 10-year ISI interval, which began on July 1, 1995, and will end on June 30, 2005. The fourth 10-year ISI interval would begin on July 1, 2005 and would end on June 30, 2015. Entergy requested that PRR-39 be granted for the third 10-year ISI interval and the remaining service life of these welds, i.e., fourth 10-year inspection interval. The upcoming refueling outage 15 is the last refueling outage in the third inspection interval. The fourth inspection interval is short by 3 years of a 10-year interval because the operating license for PNPS expires on June 8, 2012. Therefore, the subject welds have a remaining service life of 8 years (2005 to 2012). The staff finds that Entergy's requested relief for the third and fourth 10-year inspection intervals is acceptable because the actual duration of this request is only 8 calendar years.

6. The staff reviewed EPRI Report 1003616 with respect to the request of allowing a weld overlay area of 300 square inches. The staff found that the EPRI report did not include a stress analysis of a weld overlay repair area of 300 square inches. The report does provide a stress analysis of weld overlay areas of 100 and 126 square inches. Although it was not analytically determined whether the stresses derived from the 100 or 126 square-inch model would be applicable to the 300 square-inch weld overlay area, the staff believes that the analyses presented in the EPRI report do provide sufficient understanding of the structural integrity of a weld overlay of 300 square-inch area. Also, the staff has approved a relief request from the Susquehanna nuclear power plant for a weld overlay area of 300 square inches based on the EPRI report. Therefore, the staff finds Entergy's requested weld overlay area of 300 square inches acceptable. The acceptability of any weld overlay area greater than 300 square inches would need to be demonstrated by a stress analysis that considers the exact weld overlay area, to demonstrate that the residual stresses from the weld overlay will not affect the structural integrity of the piping.

The staff has determined that the proposed alternative to use ASME Code Cases N-504-2 and N-638 for the weld overlay repair of recirculation and core spray piping is acceptable because the alternative will provide an acceptable level of quality and safety.

5.0 CONCLUSION

Based on the review of information submitted, the staff has determined that Entergy's proposed PRR-39 will provide an acceptable level of quality and safety. Therefore, pursuant to 10 CFR 50.55a(a)(3)(i), the NRC staff authorizes Entergy's proposed use of ASME Code Section XI Code Cases N-504-2 and N-638 with modifications as identified in Entergy's submittal to perform structural weld overlay repair of potential crack(s) in the recirculation and core spray piping at PNPS.

All other requirements of Section XI of the ASME Code for which relief has not been specifically requested remain applicable, including third party review by the Authorized Nuclear Inservice Inspector.

Principal Contributor: J. Tsao

Date: April 12, 2005

APPENDIX C

INSERVICE INSPECTION CALIBRATION STANDARDS

Appendix C: Inservice Inspection Calibration Standards

Table C.1 of this Appendix provides detailed information on the PNPS ISI Calibration Standards that will be used for NDE inspections during the 4th Inspection Interval. See Section 1.12 of this ISI Program Plan for additional information.

Table C.1
PNPS ISI CALIBRATION STANDARDS

ID NO.	MATERIAL TYPE	SIZE	THICKNESS	PLANT USAGE
PIL-4A	SA-106 GR-C (C.S.)	D=20"	T=1.031"	RETIRED; was previously used for 20"-EB-1, 20"-EL-10, 20"-EE-1.
PIL-5	SA-533 GR-B (C.S.)	Vessel Block	T=4.379" (91')	Reactor Pressure Vessel
PIL-5A	SA-533 GR-B (C.S.)	Vessel Block	T=7."x6.5"(74')	RPV-Nzl to Vsl Welds:RPV-N2A to -N2K, -N3A to -N3D, -N4A- to -N4D, -N6A, -N6B, -N9A, -N9B, -N10, -N1A, -N1B. RPV-Welds:-SW-0-360, -HF-0-360, -L-1 to -L-6, -L-1-338/339(A,B,C,),-L-2-338/339(A,B,C), -FT-1-56, -SF-0-360, -C-3-339A/B,-C-9-338
PIL-5B	SA-533 GR-B (C.S.)	Vessel Block	T=4.5"x6.0"	RPV-Nzl to Vsl Welds: RPV-N8, -N7A, -N7B. RPV-Welds: RPV-TH-C, RPV-BH-M1 to RPV-BH-M14, RPV-BH-C1 and RPV-BH-C2, RPV-TH-M1 to -M8
PIL-8A	SA-312 TP304 (S.S.)	D=10"	T=.593"	10"-DC-14, 10"-DCA-14
PIL-9A	SA-312 TP304 (S.S.)	D=6"	T=.416"	6"DCA-12, 6"-DA-6, 6"-DCA-10
PIL-12A	SA-333 GR-1 (C.S.)	D=4"	T=.437"	4"-DB-13
PIL-13A	SA-106 GR-B (C.S.)	D=4"	T=.350"	Not Currently Being Used
PIL-14A	SA-106 GR-B (C.S.)	D=10"	T=.593"	10"-EB-23,10"-DBA-14
PIL-15A	SA-106 GR-B (C.S.)	D=6"	T=.562"	6"-DL-12, 6-DL-6, 6-DB-13
PIL-17A	SA-106 GR-B (C.S.)	D=12"	T=1.000"	12"-DL-6
PIL-18A	SA-312 TP304 (S.S)	D=4"	T=.346"	4"-DM-12, 4"-EA-10, 4"-DA-12
PIL-23A	SA-358 TP304 (S.S)	D=18"	T=.750"	18"-DC-10
PIL-29A	SA-106 GR-B (C.S.)	D=18"	T=1.250"	18"-DB-10, 18"-DB/DC-10,18"-DL-6, 18"-DE/DL-6
PIL-30A	SA-240 TP304 (S.S.)	D=12"	T=1.000"	Not Currently Being Used
PIL-31	SA-540 GR-B23 (C.S.)	L=10" (Vessel Stud)	T=6.125"	RPV-Studs (No Longer Used)
PIL-32	SA-540 GR-B23 (C.S.)	D=8.75"	L=6.625"	Reactor Pressure Vessel Nuts
PIL-33	SA-508 CL2 (C.S.)	Large Nozzle Inner Radii	T=Various	RPV-Nozzles: RPV-N2A-NIR to RPV-N2K-NIR, RPV-N3A-NIR to RPV-N3D-NIR, RPV-N4A-NIR to RPV-N4D-NIR, RPV-N6A-NIR, RPV-N6B-NIR, RPV-N9A-NIR, RPV-N1A-NIR, RPV-N1B-NIR.
PIL-34	SA-182 TP-316 (S.S)	D=12.75"	T=1.145"	RPV-Nozzle to Safe End: 14-A-1 AND 14-B-1
PIL-34	SA-105 GR-B (C.S.)			
PIL-39A	SA-333 GR-6 (C.S.)	D=6"	T=.280"	6"-HL-10, 6"-HD-13, 6"-HL-13, 6"-HE-26, 6"-GB-14, 6"-HD-14, 6"-HB-10, 6"-GB-10
PIL-41A	SA-106 GR-B (C.S.)	D=10"	T=.364"	10"-GB-14, 10"-GL-10, 10-GB-10
PIL-44A	SA-106 GR-B (C.S.)	D=12"	T=.375"	12"-HL-10, 12"-HD-14, 12"-GB-10

Table C.1
PNPS ISI CALIBRATION STANDARDS

ID NO.	MATERIAL TYPE	SIZE	THICKNESS	PLANT USAGE
PIL-45A	SA-106 GR-B (C.S.)	D=14"	T=.937"	14"-DB-23, 14"-DB/DL-23
PIL-46A	SA-106 GR-B (C.S.)	D=16"	T=.375"	16"-HB-23, 16"-HD-23, 16"-HL-23, 16"-HE-26, 16"-GB-10, 16"-HBB-10, 16"-HL-10
PIL-47A	SA-106 GR-B (C.S.)	D=18"	T=.375"	18"-HL-10, 18"-HD-14, 18"-HL-14, 18"-HLB-14, 18"-HB-23, 18"-GB-10, 18"-HB-10
PIL-48A	SA-106 GR-B (C.S.)	Plate	T=.375"	Not Currently Being Used
PIL-50A	SA-106 GR-B (C.S.)	D=18"	T=.438"	Not Currently Being Used
PIL-55	SA-106 GR-B (C.S.)	D=18"	T=1.438"	18"-DL-6
PIL-56	SA-106 GR-B (C.S.)	D=4"	T=.252"	Not Currently Being Used
PIL-57	SA-106 GR-B (C.S.)	D=10"	T=.745"	10"-DB-23, 10"-DB-14
PIL-58	SA-106 GR-B (C.S.)	D=6"	T=.462"	Not Currently Being Used
PIL-59	SA-508 CL2 (C.S.)	Small Nozzle Inner Radii	T=Various	RPV-Nozzles: RPV-N8-NIR, RPV-N9B-NIR, RPV-N10-NIR, RPV-N7A-NIR, RPV-N7 B-NIR.
PIL-61	SA-358 TP316 (S.S.)	D=6"	T=.525"	6"-DCA-12, 6"-DCA/EA-12
PIL-62	SA-358 TP316 (S.S.)	D=10"	T=.690"	10"-DC/DCA-14
PIL-63	SA-358 TP316 (S.S.)	D=12"	T=.850"	12"-DCA-2
PIL-64	SA-358 TP316 (S.S.)	D=18"	T=.968"	18"-DCA-10, 18"-DC/DCA-10, 18"-DCA/DC-10
PIL-65	SA-358 TP316 (S.S.)	D=20"	T=1.081"	20"-DCA-10, 20"-DCA/EL-10
PIL-66	SA-358 TP316 (S.S.)	D=22"	T=1.750"	22"-DCA-2; welds 2R-HA-2, 2R-HA-3, 2R-HB-2, 2R-HB-3
PIL-67	SA-358 TP316 (S.S.)	D=28"	T=1.298"	28"-DCA-2
PIL-68	SA-358TP316 (S.S.)	D=28"	T=1.561"	28"-DCA-2
PIL-70	SA-376/655 TP316 (S.S.)	D=10"	T=.950"	Not Currently Being Used
PIL-73	SA-106 GR-B (C.S.)	D=6"	T=.437"	6"-EB-3, 6"-EB-1
PIL-74	SA-106 GR-B (C.S.)	D=12"	T=.688"	12"-EB-3
PIL-75	SA-358 TP316 (S.S.)	D=28"	T=2.265"	28"-DCA-2
PIL-78	SA-508 CL1 (C.S.)	D=12"	T=.950"	RPV-Nozzle to Safe End Welds: 2R-N2A-1 to 2R-N2K-1 (12"-DCA-2)
PIL-78	SA-182 GR-F316 (S.S.)	D=12"	T=1.325"	
PIL-79	SA-508 CL1 (C.S.)	D=28"	T=1.675"	RPV-Nozzle to Safe End Welds: 2R-N1A-1 and 2R-N1B-1
PIL-79	SA-182 GR-F316 (S.S.)	D=28"	T=2.178"	
PIL-80	SA-182 GR-F316 (S.S.)	Flange	T=1.755"	Not Currently Being Used (28"-DCA-2)

Table C.1
PNPS ISI CALIBRATION STANDARDS

ID NO.	MATERIAL TYPE	SIZE	THICKNESS	PLANT USAGE
PIL-84A	SA-193 GR-B7 (C.S.)	L=17.55"	T=2.75"	Recirc. Pump Bolting
PIL-85	SA-312 TP304 INC 82	D=5.062"	Weld Overlay	RPV-Nozzle: RPV-N9A-1; In lieu of block PIL-85, use sizing block PIL-102 or PIL-103.
PIL-86	SA-515 GR-70 (C.S.)	Plate	T=.734"	Not Currently Being Used
PIL-87	SA-312 TP304 (S.S.)	D=6"	T=.604"	Not Currently Being Used
PIL-88	SA-333 GR1 & 6 (C.S.)	D=12"	T=.500"	Not Currently Being Used
PIL-89	SA-333 GR1 (C.S.)	D=8"	T=.500"	Not Currently Being Used
PIL-90	SA-36 (C.S.)	Plate	T=.375"	Not Currently Being Used
PIL-91	SA-358 TP304 CL1 (S.S.)	D=18"	T=1.156"	18"-DB/DC-10 pipe; DC-10-F10R and DB/DC-10-3001-2-1
PIL-93	SA-182 TP304 (S.S.)	D=4"	T=.624"	RPV-Nozzle: RPV-N9B-1
PIL-94	SA-516 GR-70 (C.S.)	Plate	T=3.00"	RPV-Nozzles: RPV-N4A TO -N4D (BORE AREA)
PIL-95	SFA-5.3 INC 82 (C.S.)	D=5.125"	T=.600"	RPV-Nozzle: RPV-N10 Nozzle Cap Weld 3-I-1
PIL-96	SA-312 TP316 (S.S.)	D=6"	T=.432"	6"-EA-12
PIL-97	SA-312 TP316 (S.S.)	D=4"	T=.337"	4"-DA-12
PIL-98	SA-376 TP316 (S.S.)	D=4"	T=.337"	4"-DA-12
PIL-99	SA-508 GR-B (C.S.)	Vessel Stud	74' EL. Rx. Bldg.	RPV-Studs: RPV-CS-1-56, RPV-HB-41-44
PIL-100	SA-508 CL2 (C.S.)	D=9"	T=1.4375"	RPV-Nozzle: RPV-N7A-1, RPV-N7B-1
PIL-101	SA-508 CL2 (C.S.)	D=6"	T=1.0935"	RPV-Nozzle: RPV-N8-1
PIL-102	316 (S.S.)	N/A	T=2.500"	Sizing Block
PIL-103	316 (S.S.)	N/A	T=1.500"	Sizing Block
PIL-104	1018 (C.S.)	N/A	T=1.500"	Sizing Block
PIL-105	316 (S.S.)	N/A	T=.500"	Sizing Block
PIL-106	1018 (C.S.)	N/A	T=.500"	Sizing Block
PIL-107	A-333 GR.1 (CS)	D=8"	.322"	8-HL-13, 8-HB-13
PIL-108	A-333 GR.1 (CS)	D=12"	.406"	
PIL-109	A-106 GR.B (CS)	D=20"	.375"	20"-HB-10, 20"-HB-23, 20"-HL-23
PIL-110	A-333 GR. 1 (CS)	D=20"	.375"	
PIL-111	A-333 GR. 1 (CS)	D=24"	.375"	24"-HL-23
PIL-112	A-106 GR. B (CS)	D=20"	1.032"	20"-EB-1, 20"-EL-10, 20"-EE-1; (used to use PIL-4A).

Table C.1
PNPS ISI CALIBRATION STANDARDS

ID NO.	MATERIAL TYPE	SIZE	THICKNESS	PLANT USAGE
PIL-113	A-333 GR. 6 (CS)	D=20"	1.032"	
PIL-114	Carbon Steel	D=18"	.375"	18" Pipe; .50"/.100"/.150" Notches O.D. Sizing Block
PIL-115	A333-94 GR. 1&6	D=10"	594"	14-A-3, 14-A-10A, 14-B-3, 14-B-10A
PIL-116	SA-358 TP-316 (SS)	D=18"	.938"	10R2-IB-8
PIL-117	A335 Gr. P11	D=3"	.438"	Used for sizing pipe OD flaws
PIL-118	SB-167 Inconel	D=2"	.218"	N16B-INC (not entered into system yet) for weld RPV-N16-R-2. Ref. RIR# 04-0055.
PIL-119	SA-312/SS	D=2"	.218"	N16B-SS (not entered into system yet) for weld RPV-N16-R-2

APPENDIX D

10CFR50.55a(g)(4)(iv) Requests

APPENDIX D: 10CFR50.55a(g)(4)(iv) Requests

Proposed Uses of Subsequent Code Editions and Addenda

In accordance with 10CFR50.55a(g)(4)(iv), inservice examination of components and system pressure tests may meet the requirements set forth in subsequent editions and addenda that are incorporated by reference in paragraph 10CFR50.55a(b), subject to the limitations and modifications listed in paragraph 10CFR50.55a(b), and subject to USNRC approval. Portions of editions or addenda may be used provided that all related requirements of the respective editions or addenda are met.

Table D.1 below provides a summary listing and revision status of all 10CFR50.55a(g)(4)(iv) requests related to the use of subsequent editions and addenda of Section XI for inservice inspections at the Pilgrim Nuclear Power Station during the Fourth Ten-Year Interval. At the end of this table, each individual 10CFR50.55a(g)(4)(iv) request follows.

TABLE D.1
INSERVICE INSPECTION PROGRAM
10CFR50.55a(g)(4)(iv) REQUEST INDEX

10CFR50.55a(g)(4)(iv) REQUEST NUMBER	*PAGE(S)*	*REV.*	*DATE*	*TOPIC*
PIL-05-R-001	D-3	0	07/01/05	Use of the 2001 Edition, through the 2003 Addenda, Subparagraph IWA-4540(a) for pressure testing ISI Class 1, 2, and 3 Items following repair / replacement activities performed by welding or brazing on a pressure-retaining boundary.
PIL-05-R-002	D-4	0	07/01/05	Use of the 2001 Edition, through the 2003 Addenda, Subparagraph IWA-2210, including subsection IWA-2211 through IWA-2216, for clarifications as to the requirements of visual inspections to be performed on Class 1, 2, & 3 components during inservice examinations and repair / replacement activities.
PIL-05-R-003	D-5	0	07/01/05	Use of the 2001 Edition, through the 2003 Addenda, Table IWD-2500-1 for Examination Category D-B for all Class 3 component pressure test requirements, i.e., delete Class 3 system hydrostatic test requirements (Item D2.20).

10CFR50.55a Request Number: PIL-05-R-001
Revision 0
(Page 1 of 1)

Proposed Use of Subsequent Code Edition and Addenda
In Accordance with 10CFR50.55a(g)(4)(iv) for Inservice Inspection Items

1. **ASME Code Components Affected**

Pressure testing of all ISI Class 1, 2, and 3 Items following repair / replacement activities performed by welding or brazing on a pressure-retaining boundary.

2. **Applicable Code Edition and Addenda**

The proposed Code of Record for the Fourth Inservice Inspection Interval at Pilgrim is the ASME Boiler and Pressure Vessel Code Section XI, 1998 Edition, through the 2000 Addenda.

3. **Proposed Subsequent Code Edition and Addenda (or Portion)**

Entergy proposes to use the ASME Boiler and Pressure Vessel Code Section XI, 2001 Edition, through the 2003 Addenda, Subparagraph IWA-4540(a) as applicable for Class 1, 2, and 3 Items following repair / replacement activities performed by welding or brazing on a pressure-retaining boundary. The 2001 Edition, up to the 2003 Addenda of the ASME Section XI Code reduces the pressure test requirements and has been incorporated by reference in 10 CFR 50.55a(b) [Ref: 69 FR 58819 dated October 1, 2004].

4. **Related Requirements**

The changes to ASME Section XI, Subparagraph IWA-4540(a) for Pressure Testing of Class 1, 2, and 3 Items following repair/replacement activities performed by welding or brazing on a pressure-retaining boundary does not affect other parts of the Code. The 2001 Edition, 2003 Addenda of ASME Section XI Code requires that brazed joints and welds made in the course of a repair/replacement activity require pressurization and VT-2 visual examination during the test. This added requirement would also be followed under the Pilgrim Repair/Replacement Program.

5. **Duration of Proposed Request**

It is proposed to use the alternative code edition and addenda for the duration of the Fourth Inservice Inspection Interval at Pilgrim Nuclear Power Station.

10CFR50.55a Request Number: PIL-05-R-002
Revision 0
(Page 1 of 1)

Proposed Use of Subsequent Code Edition and Addenda
In Accordance with 10CFR50.55a(g)(4)(iv) for Inservice Inspection Items

1. **ASME Code Components Affected**

Code Class:	Class 1, 2, and 3
References:	IWA-2210, "Visual Examinations"; Tables IWB-, IWC-, IWD-, IWE-, IWF-, and IWL-2500-1.

2. **Applicable Code Edition and Addenda**

The Code of Record proposed for the Fourth Inservice Inspection Interval at Pilgrim Station is the ASME Boiler and Pressure Vessel Code Section XI, 1998 Edition, through the 2000 Addenda.

3. **Proposed Subsequent Code Edition and Addenda (or Portion)**

Entergy proposes to use the ASME Boiler and Pressure Vessel Code Section XI, 2001 Edition, through the 2003 Addenda, Subparagraph IWA-2210, including subsection IWA-2211 through IWA-2216. The 2001 Edition, up to the 2003 Addenda of the ASME Section XI Code has been incorporated by reference in 10 CFR 50.55a(b) [Ref: 69 FR 58819 dated October 1, 2004].

4. **Related Requirements**

The changes to ASME Section XI, Paragraph IWA-2200 including Subparagraphs IWA-2211 through IWA-2216 visual inspections for Class 1, 2, and 3 items does not affect other parts of the Code. The 2001 Edition, 2003 Addenda of ASME Section XI Code provides clarifications as to the requirements of visual inspections to be performed on Class 1, 2, & 3 components during inservice examinations. This requirement would also be followed under the Pilgrim Repair/Replacement Program.

5. **Duration of Proposed Request**

It is proposed to use the alternative code edition and addenda for the duration of the Fourth Inservice Inspection Interval at Pilgrim Nuclear Power Station.

10CFR50.55a Request Number: PIL-05-R-003
Revision 0
(Page 1 of 1)

Proposed Use of Subsequent Code Edition and Addenda
In Accordance with 10CFR50.55a(g)(4)(iv) for Inservice Inspection Items

1. **ASME Code Components Affected**

Code Class: ASME Code Class 3 (Subsection IWD) Pressure Retaining Components
Exam. Category: D-B (All Pressure Retaining Components)

2. **Applicable Code Edition and Addenda**

The proposed Code of Record for the Fourth Inservice Inspection Interval at Pilgrim is the ASME Boiler and Pressure Vessel Code Section XI, 1998 Edition, through the 2000 Addenda.

3. **Proposed Subsequent Code Edition and Addenda (or Portion)**

Entergy proposes to use Table IWD-2500-1 for Examination Category D-B from the ASME Boiler and Pressure Vessel Code Section XI, 2001 Edition, through the 2003 Addenda, in place of Table IWD-2500-1 for Examination Category D-B from the 1998 Edition, through the 2000 Addenda, for all Class 3 system pressure test requirements.

The 1998 Edition, through the 2000 Addenda requires a system hydrostatic test with a VT-2 examination of all Class 3 pressure retaining components under Item No. D2.20, each inspection interval. This requirement and Item No. D2.20 have been deleted in their entirety from the 2001 Edition, 2003 Addenda.

4. **Related Requirements**

The changes between the 2001E/2003A and the 1998E/2000A codes/editions to ASME Section XI, Table IWD-2500-1 for the Examination Category D-B pressure testing of Class 3 pressure retaining components does not affect other parts of the Code. Table IWD-2500-1 from the 1998E/2000A will be used for all other Class 3 Examination Categories.

5. **Duration of Proposed Request**

It is proposed to use the above alternative code edition and addenda for the duration of the Fourth Inservice Inspection Interval at Pilgrim Nuclear Power Station.

APPENDIX E

INSERVICE INSPECTION PROGRAM DRAWINGS

APPENDIX E: Inservice Inspection Program Drawings

This Appendix provides a listing of various ISI drawings applicable to the Pilgrim Inservice Inspection Program. These drawings are for reference only. The latest drawings should be obtained from Document Control.

E.1 Inservice Inspection Boundary Drawings

Table E.1 provides a listing of the Inservice Inspection Boundary Drawings applicable to the Fourth Interval at Pilgrim Station. These drawings are Pilgrim Station Piping & Instrumentation Drawings (P&IDs) that are coded to identify the ISI Class 1, 2 and 3 piping and components subject to inservice inspection.

TABLE E.1
INSERVICE INSPECTION BOUNDARY DRAWINGS

DRAWING NUMBER	TITLE
ISI-M-200	LEGEND & SYMBOLS
ISI-M-212 Sh. 1	SERVICE WATER, SCREEN WASH & HYPO-CHLORINATION SYSTEMS
ISI-M-215 Sh.1	COOLING WATER SYSTEM - REACTOR BUILDING
ISI-M-215 Sh. 2	COOLING WATER SYSTEM - REACTOR BUILDING
ISI-M-215 Sh. 3	COOLING WATER SYSTEM - REACTOR BUILDING
ISI-M-215 Sh. 4	COOLING WATER SYSTEM - REACTOR BUILDING
ISI-M-220 Sh. 1	COMPRESSED AIR
ISI-M-220 Sh. 2	COMPRESSED AIR
ISI-M-227 Sh. 1	CONTAINMENT ATMOSPHERIC CONTROL SYSTEM
ISI-M-227 Sh. 2	CONTAINMENT ATMOSPHERIC CONTROL SYSTEM
ISI-M-232	RADWASTE COLLECTION
ISI-M-239 Sh. 1	H_2 & O_2 ANALYZER AND REACTOR COOLANT PRESSURE BOUNDARY LEAK DETECTION SYSTEMS / POST ACCIDENT SAMPLING SYSTEM

TABLE E.1 (cont'd)
INSERVICE INSPECTION BOUNDARY DRAWINGS

DRAWING NUMBER	TITLE
ISI-M-239 Sh. 2	H_2 & O_2 ANALYZER AND REACTOR COOLANT PRESSURE BOUNDARY LEAK DETECTION SYSTEMS / POST ACCIDENT SAMPLING SYSTEM
ISI-M-241 Sh. 1	RESIDUAL HEAT REMOVAL SYSTEM
ISI-M-241 Sh. 2	RESIDUAL HEAT REMOVAL SYSTEM
ISI-M-242	CORE SPRAY SYSTEM
ISI-M-243	HPCI SYSTEM (SHEET 1)
ISI-M-244	HPCI SYSTEM (SHEET 2)
ISI-M-245	RCIC SYSTEM (SHEET 1)
ISI-M-246	RCIC SYSTEM (SHEET 2)
ISI-M-247	REACTOR WATER CLEAN-UP SYSTEM
ISI-M-249	STANDBY LIQUID CONTROL SYSTEM
ISI-M-250 Sh.1	CONTROL ROD DRIVE HYDRAULIC SYSTEM
ISI-M-250 Sh. 2	CONTROL ROD DRIVE HYDRAULIC SYSTEM
ISI-M-251 Sh. 1	RECIRCULATION PUMP INSTRUMENTATION
ISI-M-251 Sh. 2	RECIRCULATION PUMP INSTRUMENTATION
ISI-M-252 Sh. 1	NUCLEAR BOILER
ISI-M-252 Sh. 2	NUCLEAR BOILER
ISI-M-253 Sh. 1	NUCLEAR BOILER VESSEL INSTRUMENTATION
ISI-M-253 Sh. 2	NUCLEAR BOILER VESSEL INSTRUMENTATION

E.2 Piping Isometric Drawings

Table E.2 provides a listing of the Piping Isometric Drawings for PNPS systems subject to inservice inspection. These drawings identify pipe welds, flange and valve bolted connections, pumps, valves, integral attachments, and pipe supports that are within the non-exempt piping boundaries. In addition, system identifications, locations, room names, pipe size, and configuration are identified. Piping and components that are exempt from nondestructive and visual examination in accordance with ASME Section XI, Paragraphs IWB-1220, IWC-1220, and IWD-1220 are not normally depicted on these drawings. If exempt piping or components are shown, it is for information only.

TABLE E.2
PIPING ISOMETRIC DRAWINGS

ISI DRAWING NUMBER	TITLE
ISI I 0	ISOMETRIC LEGEND ISI WELD MAP
ISI-E206A	FUEL POOL COOLING HEAT EXCHANGER INTEGRAL ATTACHMENTS
ISI-E207A&B	RHR HEAT EXCHANGER ISI COMPONENT DRAWING
ISI-E209A	RBCCW HEAT EXCHANGER INTEGRAL ATTACHMENTS
ISI-E122A	TBCCW HEAT EXCHANGER INTEGRAL ATTACHMENTS
ISI-P202A	RBCCW PUMP SUPPORTS
ISI-P203A	RHR PUMP INTEGRAL ATTACHMENTS
ISI-P215A	CORE SPRAY PUMP INTEGRAL ATTACHMENTS
ISI I 1-1 Sh.1	MAIN STEAM SYSTEM MAIN STEAM & DRAIN MANIFOLD PIPING ISI WELD MAP
ISI I 1-1 Sh.2	MAIN STEAM SYSTEM MAIN STEAM & DRAIN MANIFOLD PIPING ISI WELD MAP
ISI I 2-0	RECIRCULATION LOOP DETAILS
ISI I 2R-A	NUCLEAR BOILER SYSTEM REACTOR RECIRCULATION PIPING LOOP A ISI WELD MAP
ISI I 2R-B	NUCLEAR BOILER SYSTEM REACTOR RECIRCULATION PIPING LOOP B ISI WELD MAP
ISI I 3-1	CONTROL ROD DRIVE HYDRAULIC SYSTEM REACTOR CONTROL ROD DRIVE PIPING ISI WELD MAP
ISI I 6-1	CONDENSATE & FEEDWATER SYSTEM FEEDWATER LOOP A & LOOP B ISI WELD MAP
ISI I 6-1A	CONDENSATE & FEEDWATER SYSTEM FEEDWATER LOOPS A & B ISI WELD MAP
ISI I 10-1	RESIDUAL HEAT REMOVAL SYSTEM RHR PIPING LOOPS A & B ISI WELD MAP
ISI I 10-1A	RESIDUAL HEAT REMOVAL SYSTEM RHR SUPPLY ISI WELD MAP

TABLE E.2
PIPING ISOMETRIC DRAWINGS

ISI DRAWING NUMBER	TITLE
ISI I 10-1B	RESIDUAL HEAT REMOVAL SYSTEM RHR PUMP SUCTION CROSS CONNECTION ISI WELD MAP
ISI I 10-1C	RESIDUAL HEAT REMOVAL SYSTEM FUEL POOL COOLING TO RHR SUCTION ISI WELD MAP
ISI I 10-2A	RESIDUAL HEAT REMOVAL SYSTEM RHR PUMPS P-203A & P-203C SUCTION ISI WELD MAP
ISI I 10-2B	RESIDUAL HEAT REMOVAL SYSTEM RHR PUMPS P-203B & P-203D SUCTION ISI WELD MAP
ISI I 10-3A	RESIDUAL HEAT REMOVAL SYSTEM PUMPS P-203A & P-203C DISCHARGE ISI WELD MAP
ISI I 10-3B	RESIDUAL HEAT REMOVAL SYSTEM PUMPS P-203B & P-203D DISCHARGE ISI WELD MAP
ISI I 10-4A Sh. 1	RESIDUAL HEAT REMOVAL SYSTEM DISCHARGE TO DRYWELL & TORUS ISI WELD MAP
ISI I 10-4A Sh. 2	RESIDUAL HEAT REMOVAL SYSTEM DISCHARGE TO DRYWELL & TORUS ISI WELD MAP
ISI I 10-4B Sh. 1	RESIDUAL HEAT REMOVAL SYSTEM RHR SYSTEM X-CONNECT DISCHARGE ISI WELD MAP
ISI I 10-4B Sh. 2	RESIDUAL HEAT REMOVAL SYSTEM RHR SYSTEM X-CONNECT DISCHARGE ISI WELD MAP
ISI I 10-5B Sh. 1	RHR & CORE SPRAY SYSTEMS RHR & CORE SPRAY DISCHARGE ISI WELD MAP
ISI I 10-5B Sh. 2	RHR & CORE SPRAY SYSTEMS RHR & CORE SPRAY DISCHARGE ISI WELD MAP
ISI I 11-1	STANDBY LIQUID CONTROL SYSTEM REACTOR INJECTION ISI WELD MAP
ISI I 12-1 Sh. 1	REACTOR WATER CLEAN-UP SYSTEM SUCTION & RPV DRAIN ISI WELD MAP
ISI I 12-1 Sh. 2	REACTOR WATER CLEAN-UP SYSTEM SUCTION & RPV DRAIN ISI WELD MAP
ISI I 12-2	REACTOR WATER CLEAN-UP SYSTEM HEAT EXCHANGER E208 DISCHARGE ISI WELD MAP

TABLE E.2
PIPING ISOMETRIC DRAWINGS

ISI DRAWING NUMBER	TITLE
ISI I 12-3	RWCU SYSTEM HEAT EXCHANGER PIPING ISI WELD MAP
ISI I 13-1	REACTOR CORE ISOLATION COOLING SYSTEM TURBINE STEAM FLOW MS LINE ISI WELD MAP
ISI I 13-2	REACTOR CORE ISOLATION COOLING SYSTEM RCIC PUMP SUCTION LINE ISI WELD MAP
ISI I 13-3	REACTOR CORE ISOLATION COOLING SYSTEM RCIC TURBINE EXHAUST ISI WELD MAP
ISI I 13-4	REACTOR CORE ISOLATION COOLING SYSTEM PUMP SUCTION FROM CONDENSATE ISI WELD MAP
ISI I 13-5	REACTOR CORE ISOLATION COOLING SYSTEM PUMP SUCTION FROM CONDENSATE ISI WELD MAP
ISI I 14-1	CORE SPRAY SYSTEM PUMPS P215A & P215B DISCHARGE ISI WELD MAP
ISI I 14-2A	CORE SPRAY SYSTEM A TRAIN ISI WELD MAP
ISI I 14-2B	CORE SPRAY SYSTEM B TRAIN ISI WELD MAP
ISI I 23-1	HIGH PRESSURE COOLANT INJECTION SYSTEM TURBINE STEAM SUPPLY & DISCHARGE ISI WELD MAP
ISI I 23-2	HIGH PRESSURE COOLANT INJECTION SYSTEM TURBINE STEAM SUPPLY ISI WELD MAP
ISI I 23-3	HIGH PRESSURE COOLANT INJECTION SYSTEM TURBINE EXHAUST SYSTEM ISI WELD MAP
ISI I 23-4	HIGH PRESSURE COOLANT INJECTION SYSTEM HIGH PRESSURE COOLANT ISI WELD MAP
ISI I 23-5	HIGH PRESSURE COOLANT INJECTION SYSTEM HIGH PRESSURE COOLANT ISI WELD MAP
ISI I 29-1 Sh. 1	SERVICE WATER SYSTEM SUPPLY & RETURN E209A & E209B & E122 A & E122B

TABLE E.2
PIPING ISOMETRIC DRAWINGS

ISI DRAWING NUMBER	TITLE
ISI I 29-1 Sh. 2	SERVICE WATER SYSTEM SERVICE WATER PUMPS DISCHARGE ISI WELD MAP
ISI I 30-1 Sh. 1	REACTOR BUILDING CLOSED COOLING WATER SYSTEM PUMPS DISCHARGE ISI WELD MAP
ISI I 30-1 Sh. 2	REACTOR BUILDING CLOSED COOLING WATER SYSTEM REACTOR BUILDING
ISI I 30-2 Sh. 1	REACTOR BUILDING CLOSED COOLING WATER SYSTEM REACTOR BUILDING
ISI I 30-2 Sh. 2	REACTOR BUILDING CLOSED COOLING WATER SYSTEM REACTOR BUILDING
ISI I 30-3	REACTOR BUILDING CLOSED COOLING WATER SYSTEM INTEGRAL ATTACHMENTS
ISI I-30-4 Sh. 1	REACTOR BUILDING CLOSED COOLING WATER SYSTEM CLASS I PBO
ISI I-30-4 Sh. 2	REACTOR BUILDING CLOSED COOLING WATER SYSTEM CLASS I PBO
ISI I-30-5	REACTOR BUILDING CLOSED COOLING WATER SYSTEM CLASS I PBO
ISI I-30-6	REACTOR BUILDING CLOSED COOLING WATER SYSTEM DRYWELL PIPING
ISI I-30-7	REACTOR BUILDING CLOSED COOLING WATER SYSTEM CLASS I PBO INTEGRAL ATTACHMENT TABLE
ISI I 50-1	CONTAINMENT ATMOSPHERIC CONTROL SYSTEM DRYWELL & TORUS PURGE & VENT PIPING ISI WELD MAP
ISI I 54-1	NUCLEAR BOILER SYSTEM REACTOR VESSEL WELDS & NOZZLES ISI WELD MAP
ISI I 54-2	NUCLEAR BOILER SYSTEM REACTOR VESSEL CLOSURE HEAD WELDS & NOZZLES ISI WELD MAP
ISI I 54-3	NUCLEAR BOILER SYSTEM REACTOR VESSEL BOTTOM HEAD WELDS & NOZZLES ISI WELD MAP
ISI I 54-4	NUCLEAR BOILER SYSTEM REACTOR VESSEL NOZZLES ISI WELD MAP

E.3 IWE Containment Inspection Program Drawings

Table E.3 lists the drawings prepared to aid in the performance of the IWE Containment Inspection Program.

TABLE E.3
IWE CONTAINMENT INSPECTION PROGRAM DRAWINGS

Drawing	Title
ISI-IWE-AUG-1	IWE Project Containment Vessel Augmented Inspection Points
ISI-IWE-AUG-2	IWE Boundary Reactor Building Plumbing and Drainage El. 74'-3"
ISI-IWE-1	Typical Piping Penetration
ISI-IWE-2	Typical Piping Penetration
ISI-IWE-3	Typical Piping Penetration
ISI-IWE-4	Typical Electrical Penetration
ISI-IWE-5	Typical Electrical Penetration for Coaxial Cable
ISI-IWE-6	Typical Electrical Penetration for Coaxial Cable
ISI-IWE-7	Typical Electrical Penetration for Medium Voltage Power Cable
ISI-IWE-8	Containment Vessel Section
ISI-IWE-9	Drywell Seal and Control Rod Inserts
ISI-IWE-10	CRD Hatch Drywell Penetration X-6
ISI-IWE-11	10'-0" Diameter Equipment Door Assembly
ISI-IWE-12	Suppression Chamber Access Penetrations X-200A and X-200B
ISI-IWE-13	Personnel Air Lock

APPENDIX F

REFERENCES AND CORRESPONDENCE

APPENDIX F: References and Correspondence

This Appendix contains various references and correspondence related to the Fourth Interval Inservice Inspection Plan at Pilgrim Station. The purpose of this Appendix is to incorporate important and relevant documents directly into the Inspection Plan so that related requests for information, submittals, decisions and approvals are permanently documented.

F.1 U.S. NUCLEAR REGULATORY COMMISSION (USNRC)

F.1.1 USNRC Information Notices

A. Information Notice 86-99, "Degradation of Steel Containments"
B. Information Notice 88-82, "Torus Shells With Corrosion and Degradation of Coatings"
C. Information Notice 89-79, Supplement 1, " Degraded Coatings and Corrosion of Steel Containment Vessels"
D. Information Notice 97-13, "Deficient Conditions Associated with Protective Coatings at Nuclear Power Plants"

F.1.2 USNRC Regulatory Guides

A. Regulatory Guide 1.26, "Quality Group Classifications and Standards for Water-, Steam-, and Radioactive-Waste-Containing Components of Nuclear Power Plants"
B. Regulatory Guide 1.84, "Design, Fabrication, and Materials Code Case Acceptability, ASME Section III"
C. Regulatory Guide 1.174, " An Approach for Using Probabilistic Risk Assessment in Risk-Informed Decisions on Plant-Specific Changes to the Licensing Basis"
D. Regulatory Guide 1.178, "An Approach for Plant-Specific Risk-Informed Decision Making Inservice Inspection of Piping"
E. Regulatory Guide 1.147, "Inservice Inspection Code Case Acceptability, ASME Section XI, Division 1"

F.1.3 USNRC Generic Letters

A. Generic Letter 88-01, "NRC Position on IGSCC in BWR Austenitic Stainless Steel Piping", January 25, 1988
B. Generic Letter 88-20, "Individual Plant Examination For Severe Accident Vulnerabilities"
C. Generic Letter 89-04, "Guidance on Developing Acceptable Inservice Testing Programs", April 3, 1989
D. Generic Letter 89-08, "Erosion/Corrosion-Induced Pipe Wall Thinning", May 2, 1989.
E. Generic Letter 89-13, "Service Water System Problems Affecting Safety-Related Equipment", July 18, 1989
F. Generic Letter 90-05, "Guidance for Performing Temporary Non-Code Repair of ASME Code Class 1, 2 and 3 Piping", June 15, 1990

F.1.4 USNRC Bulletins

A. Bulletin 88-08, "Thermal Stresses in Piping Connected to Reactor Cooling Systems", dated June 22, 1988.

F.1.5 USNRC NUREGs

A. NUREG 1482, "Guidelines for Inservice Testing at Nuclear Power Plants", Rev. 1

F.1.6 USNRC LETTERS & CORRESPONDENCE

A. NRC Regulatory Issue Summary (RIS) 2004-12, Clarification On Use Of Later Editions And Addenda To The ASME OM Code And Section XI, July 28, 2004

B. NRC Letter 1.01.046 dated May 2, 2001. J.W. Clifford to PNPS, "Pilgrim Nuclear PowerStation – Relief Request Regarding Approval of Alternative Risk-Informed Inservice Inspection Program for the Third Inspection Interval (TAC No. MB0841)"

C. NRC Letter 97-007, dated 2/18/97. P.D. Milano to E.T. Boulette, "Pilgrim Nuclear Power Station - Request Pertaining to Relief from ASME XI Inspections and Generic Letter (GL) 88-01 Intergranular Stress Corrosion Cracking (IGSCC) Inspections"

D. NRC Letter 99.106, dated 9/16/99. J.W. Clifford to T.A. Sullivan, "Evaluation of Requests for Relief from ASME Section XI Requirements for Containment Inspection for PNPS"

F.1.7 CODE OF FEDERAL REGULATIONS (CFR)

A. 10CFR Part 50, effective November 1, 2004.

F.2 BECo / ENTERGY LETTERS & CORRESPONDENCE

F.2.1 BECo Letter 98.011, dated 1/28/98. N.L. Desmond to NRC, "Revised Response to Generic Letter 88-01: NRC Position on IGSCC in BWR Austenitic Stainless Steel Pipe"

F.2.2 PNPS Letter 2.00.084, dated December 27, 2000. J. Alexander to NRC, "Pilgrim Risk-Informed Inservice Inspection Program"

F.2.3 PNPS Letter 2.01.013, dated January 19, 2001. J. Alexander to NRC, "Additional Information Related to Pilgrim Risk-Informed Inservice Inspection Program"

F.2.4 PNPS Letter 2.01.034, dated March 8, 2001. J. Alexander to NRC, "Update to the Pilgrim Risk-Informed Inservice Inspection Program"

F.2.5 PNPS Letter 2.01.044, dated March 27, 2001. J. Alexander to NRC, "Clarification Concerning Pilgrim Risk-Informed Inservice Inspection Program"

F.2.6 PNPS Letter 2.01.049, dated April 11, 2001. J. Alexander to NRC, "Implementation of Interim Thermal Fatigue Management Guideline (MRP-24) for Pilgrim Risk-Informed Inservice Inspection Program"

F.3 PNPS PLANT PROCEDURES

F.3.1 Procedure No. QA20.03, *First Ten-Year Interval IWE Containment Inspection Program*

F.3.2 Procedure No. NE15.03, *Performing, Reporting, and Controlling ISI Activities*

F.3.3 Procedure No. NE15.04, *IWE Augmented Examinations*

F.3.4 Procedure No. NE15.05, *Maintenance and Use of the ISIT Database*

F.3.5 Procedure No. NE15.06, *Conduct of On-Line ISI Examination*

F.3.6 Procedure No. NE15.07, *Preparation, Revision, Issuance, And Control of the Inservice Inspection Program*

F.3.7 Procedure No. NE15.08, *Control of Augmented Examinations*

F.3.8 Procedure No. NE15.09, *VT-3 Visual Examination*

F.3.9 Procedure No. NE15.10, *Visual Examination of IWE Components*

F.3.10 Procedure No. NE15.14, *First 10-Year Interval IWE Containment Inspection Program*

F.3.11 Procedure No. NE21.01, *Reactor Vessel Internals Inspection Implementing Procedure*

F.3.12 NOP01A1, *Reactor Vessel Internals Management Program*

F.3.13 NOP83M1, *ASME Code Repairs and Replacement*

F.3.14 NOP92M2, *ASME Section XI Inservice Inspection and Testing*

F.3.15 NOP02E1, *Service Water Inspections, Maintenance, and Testing in Response to Generic Letter 89-13*

F.3.16 Procedure No. 3.M.4-28, *Visual Examination and Service Life Verification of Safety Related Snubbers*

F.3.17 Procedure No. 1.5.20, *Work Control Process*

F.3.18 Procedure No. 2.1.8.2, *Safety Class 2 And 3 Pressure Test Procedure*

F.3.19 Procedure No. 2.1.8.3, *Visual Examination for Leakage During System Pressure Testing*

F.3.20 Procedure No. 2.1.8.5, *Reactor Vessel Pressurization and Temperature Control for Class 1 System Leakage Test*

F.3.21 Procedure No. 2.1.8.7, *ASME Code Visual Examination of Primary Containment*

F.3.22 Procedure No. 8.I.1.1, *Inservice Pump and Valve Testing Program*

F.4 **PNPS DESIGN SPECIFICATIONS**

F.4.1 M300, *Piping*

F.4.2 M301, *Field Fabrication and Installation of Piping and Instrumentation*

F.4.3 M577, *Piping Flow-Accelerated Corrosion Monitoring*

F.4.4 M591, *SSW & RBCCW Safety-Related Piping and Heat Exchanger Inspection, Maintenance, & Test Requirements in Response to Generic Letter 89-13*

F.4.5 M593, *PNPS Class I Pressure Boundary Only (PBO) Piping and Components Augmented Inspection Program*

F.4.6 M600, *Piping (ASME Section III Classes 1 and 2)*

F.5 PNPS DESIGN BASIS DOCUMENTS

F.5.1 TDBD-125, *Topical Design Basis Document For Inspection Of Reactor Vessel Internals*

F.5.2 TDBD-108, *Topical Design Basis Document for Inservice Inspection (ISI)*

F.5.3 SDBD No. 30A, *System Design Basis Document for the Reactor Building Closed Cooling Water (RBCCW) System*

F.6 ELECTRIC POWER RESEARCH INSTITUTE (EPRI)

F.6.1 EPRI TR-112657, "Revised Risk-Informed Inservice Inspection Evaluation Procedure", Rev. B-A

F.6.2 EPRI 1008004, "Risk-Informed Examination Coverage Requirements for Examination Category B-F, B-J, C-F-1, C-F-2 and R-A Piping Welds", Technical Update, December 2003

F.6.3 EPRI 1009631, "Risk-Informed / Safety Based (RIS_B) Inservice Inspection", Technical Update, December 2004

F.6.4 EPRI TR-113932, "BWR Vessel and Internals Project Technical Basis for Revisions to Generic Letter 88-01 Inspection Schedules (BWRVIP-75)", October 1999

F.7 VENDOR & MISCELLANEOUS REFERENCES

F.7.1 Vectra Report No. 0025-00241-001, Rev. 0, "Evaluation of Inservice Inspection Classification Boundaries at the Pilgrim Nuclear Power Station", February 1996

F.7.2 Inservice Engineering Report No. PNPS-02Q-401, "Risk-Informed Inservice Inspection Program Plan - Pilgrim Nuclear Power Station", December, 2000

F.7.3 Inservice Engineering Report No. PNPS-02Q-402, "Pilgrim Nuclear Power Station Risk-Informed Inservice Inspection Application to Class 1 Piping Basis Document", September 10, 2001

F.7.4 BECo Problem Report PR98.9531 "AE Inspection Has Not Found an Adequate Basis for the ISI Boundary Change from Class 3 to Class 0 at Normally Open RBCCW Essential Loop Isolation Valves", October 10, 1998

F.8 ENTERGY NUCLEAR MANAGEMENT MANUAL (NMM) PROCEDURE REFERENCES

F.8.1 ENN-DC-120, *ASME Section XI Code Programs*

F.8.2 ENN-DC-147, *Engineering Reports*

F.8.3 ENN-EP-S-001, *IWE General Containment Visual Inspection*

F.8.4 ENN-NDE-9.04, *Ultrasonic Examination Of Ferritic Piping Welds (ASME Section XI)*

F.8.5 ENN-NDE-9.07, *Straight Beam Ultrasonic Examination Of Bolts And Studs*

F.8.6 ENN-NDE-9.10, *Ultrasonic Examination Of Dissimilar Metal Piping Welds (ASME Section XI)*

F.8.7 ENN-NDE-9.11, *Manual Ultrasonic Examination Of Reactor Pressure Vessel Welds (Section XI App. VIII)*

F.8.8 ENN-NDE-9.12, *Manual Ultrasonic Through Wall And Length Sizing Of Ultrasonic Indications In Reactor Pressure Vessel Welds*

F.8.9 ENN-NDE-9.23, *Ultrasonic Examination Of Austenitic Piping Welds (ASME Section XI)*

F.8.10 ENN-NDE-9.28, *Manual Ultrasonic Through Wall Sizing In Pipe Welds*

F.8.11 ENN-NDE-10.01, *VT-1 Examination*

F.8.12 ENN-NDE-10.02, *VT-2 Examination*

F.8.13 ENN-NDE-10.03, *VT-3 Examination*

F.8.14 EN-LI-102, *Corrective Action Process*

F.8.15 ENN-NDE-2.10, *Certification of NDE Personnel*

F.8.16 ENN-NDE-2.11, *Qualification and Certification of ASME Section XI, Appendix VII, Ultrasonic Examination Personnel*

F.8.17 ENN-NDE-2.12, *Certification of Visual Testing (VT) Personnel*

APPENDIX G

ISI PROGRAM GLOSSARY

APPENDIX G: ISI Program Glossary

The following are various terms, listed alphabetically, that are associated with the PNPS ISI Program.

Abrasion – wearing away of a surface by rubbing and friction.

ASME Section XI – the eleventh section of the ASME Boiler and Pressure Vessel Code including its referenced Codes and Standards.

ASME Section XI Drawings – include Piping and Instrument Diagrams (P&IDs), isometrics and component drawings that delineate the specific boundaries, areas or items requiring NDE and augmented NDE.

Assess – to determine by evaluation of data compared with previously obtained data such as operating data or design specifications.

Augmented Requirements – those NDE required by documents other than ASME Section XI, such as: Regulatory Guides, NUREGs, NRC Generic Letters, I. E. Bulletins/Notices, FSAR, Technical Specifications, manufacturer's recommendations, Entergy Internal Commitments, etc.

Authorized Inspection Agency (AIA) – an organization that is empowered by an enforcement authority to provide inspection personnel and services as required by ASME Section XI.

Authorized Nuclear Inspector (ANI) – an employee of an Authorized Inspection Agency who has been qualified in accordance with NCA-5000 of Section III of the ASME Boiler and Pressure Vessel Code.

Authorized Nuclear Inservice Inspector (ANII) – a person who is employed and has been qualified by an Authorized Inspection Agency to verify that examinations, tests, and repair/replacement activities (that do not include welding or brazing) are performed in accordance with the requirements of ASME Section XI.

BWRVIP – Boiling Water Reactor Vessel and Internals Project.

BWRVIP Inspection and Evaluations Guidelines – Guidelines prepared by the BWRVIP for each Reactor Vessel internals component that performs a safety function to specify how to perform inspection and valuation of flaws. Examples are: BWRVIP-18 for the Core Spray piping and spargers, BWRVIP-25 for the core plate, BWRVIP-26 for the top guide, BWRVIP-27 for the SLC System, BWRVIP-38 the core shroud support, BWRVIP-41 for the jet pumps, BWRVIP-47 for the lower plenum components, BWRVIP-48 for the vessel ID attachment welds, BWRVIP-49 for the instrument penetrations, and BWRVIP-76 for the core shroud.

Calibration Block Standards Drawings – The drawings which detail the specific configuration of individual standards used for calibrating ultrasonic test equipment.

Cavitation – pitting of concrete caused by implosion.

Code – ASME Section XI, "Rules for Inservice Inspection of Nuclear Power Plant Components", and Addenda.

Component – an item in a nuclear power plant such as a vessel, pump, valve, or piping system.

Component Support – a metal support designed to transmit loads from a component to the load carrying building or foundation structure. Component supports include piping supports encompass those structural elements relied upon to either support the weight or provide structural stability to components.

Containment – the composite structure that serves as a leak-tight barrier which supports the load of the inside pressure in the event of a reactor coolant or steam system leak and prevents the uncontrolled release of radioactivity to the environment under normal and postulated accident conditions.

Containment Component – as applied to IWE, the component refers to a part that is designed to support the inside pressure load of the containment in the event of a Loss of Coolant Accident or High Energy Line Break. (i.e. the Drywell, Torus, Vent system, Airlocks, Equipment and Personnel Hatches, etc.).

Containment Nonstructural Attachment – also referred to as minor permanent and temporary attachments. Those attachments that do not perform a pressure retaining function nor are they in the containment vessel support path. Containment nonstructural attachments include such items as, insulation supports, cable tray supports, nameplates, locating & lifting lugs, lighting supports, pipe supports for 2" nominal or smaller piping.

Containment Structural Integral Attachments – attachments that are welded, cast, or forged integrally to the containment, and perform a pressure retaining function or are part of the containment load path.

Containment Support – a metal support designed to transmit loads from a component to the load carrying building or foundation structure. Containment supports encompass those structural elements (saddles, earthquake ties, columns) relied upon to either support the weight or provide stability to the component.

Crevice Corrosion (CC) – a Localized Corrosion (LC) piping component degradation mechanism that occurs when a crevice condition exists (i.e., thermal sleeves), and operating temperatures are > 150 °F, and oxygen or oxidizing species are present.

Defect – a flaw (imperfection or unintentional discontinuity) of such size, shape, orientation, location, or properties as to be rejectable.

Discontinuity – a lack of continuity or cohesion: an interruption in the normal physical structure of material or a product.

Efflorescence (Leeching) – a deposit of salts, usually white, formed on a surface, the substance having emerged in solution from within either concrete or masonry and subsequently been precipitated by evaporation.

Enforcement Authority – a regional or local governing body, such as a State or Municipality of the United States empowered to enact and enforce Boiler and Pressure Vessel Code legislation (i.e., State of Massachusetts).

Engineering Evaluation – an evaluation of indications that exceed allowable acceptance standards to determine if the margins required by the Design Specifications and Construction Codes are maintained.

Erosion – progressive disintegration of a solid by the abrasive or cavitation action of gases, fluids, or solids in motion.

Erosion -Corrosion (E-C) – a Flow Sensitive (FS) piping component degradation mechanism that exists at a cavitation source (i.e., throttling or pressure reducing valve or orifices) at operating temperatures < 250 °F, velocities > 30 ft/sec., and flow present > 100 hours/yr.

Evaluation – the process of determining the significance of examination or test results, including the comparison of examination or test results with applicable acceptance criteria or previous results.

Examination – the performance of visual observations and nondestructive examinations (NDE) such as radiography, magnetic particle, liquid penetrant, eddy current, and ultrasonic methods.

Examination Category – a grouping of items to examined or tested

Examination Plan – A document that provides detailed instructions for all aspects of the examination.

External Chloride Stress Corrosion Cracking (ECSCC) – a Stress Corrosion Cracking (SCC) piping component degradation mechanism that occurs at an operating temperature of > 150 °F, and when an outside piping surface is within five diameters of a probable leak path (e.g., valve stems) and is covered with non-metallic insulation that is not in compliance with USNRC Reg. Guide 1.36, or when an outside piping surface is exposed to wetting from concentrated chloride-bearing environments (e.g., seawater, brackish water, brine).

Flaw – an imperfection or unintentional discontinuity that is detectable by nondestructive examination.

Flow Accelerated Corrosion (FAC) – a Flow Sensitive (FS) degradation mechanism that is evaluated in accordance with the existing FAC Program.

Flow Sensitive (FS) – an ASME Code Case N-578 piping component degradation mechanism category consisting of various types: Erosion-Cavitation (E-C) and Flow Accelerated Corrosion (FAC).

General Corrosion – an approximately uniform wastage of a surface of a component, through chemical or electrochemical action, free of deep pits or cracks.

General Visual Inspection – a visual inspection performed either directly or remotely by persons qualified in IWE Containment Inspection, with sufficient illumination and resolution to assess the general condition that may affect the structural integrity or leak tightness of the pressure retaining component; the examination shall include all accessible interior and exterior surfaces of Class MC components, parts, and appurtenances.

Imperfection – a condition of being imperfect, a departure of a quality characteristic from its intended condition.

Indication – the response or evidence from the application of a nondestructive examination.

Inservice Examination – the process of visual, surface, or volumetric examination performed in accordance with the rules and requirements of ASME Section XI.

Inservice Inspection – methods and actions for assuring the structural and pressure-retaining integrity of safety-related nuclear power plant components in accordance with the rules of ASME Section XI.

Inspection – verification of the performance of examinations and tests by an Inspector.

Inspection Interval - as defined by regulations, a ten-year time interval, during which the ISI program is applicable using specific and Addenda of ASME Section XI. The First 10-Year Inspection Interval commences on the date of commercial operation with the successive intervals beginning on the date the previous interval ends. Each of the inspection intervals may be increased or decreased by as much as 1 year. Additionally, the interval may be extended for a period equivalent to an outage, which extends continuously for six months or more. Adjustments shall not cause successive intervals to be altered by more than 1 year from the original pattern of intervals.

Inspection Period – duration of time within an inspection interval, (i.e., 1st Period, 0-3 years; 2nd Period, 4-7 years; 3rd Period, 8-10 years). The time frame is approximately equivalent to one third of an interval. It is used for apportioning the implementation of ISI Program examinations and tests during the interval.

Inspection Program – the plan and schedule for performing examination and tests.

Item – a material, part, appurtenance, piping subassembly, component, or component support.

Instrument Root Valve – the first valve, in an instrument line, off of the main process line.

Intergranular Stress Corrosion Cracking (IGSCC) – a Stress Corrosion Cracking (SCC) piping component degradation mechanism that is evaluated in accordance with the existing IGSCC Program per USNRC Generic Letter 88-01.

In-Vessel-Visual-Inspection (IVVI) Program – a portion of the ISI Program that identifies the internal attachments, surfaces, welds and components within the reactor pressure vessel boundary, which require NDE during the 10-Year Interval.

IST Program – A PNPS controlled document (PNPS 8.I.1.1) that identifies the scope of components (pumps and valves) with their testing requirements for compliance with 10CFR50.55a(f) and NRC Generic Letter 89-04. The program includes valve cold shutdown justifications, refuel outage justifications, O&M Code justifications, and impractical Code requirements (relief requests) in accordance with 10CFR50.55a(f)(5), as applicable.

Localized Corrosion (LC) – an ASME Code Case N-578 piping component degradation mechanism category consisting of various types: Microbiologically Influenced Corrosion (MIC), Pitting Corrosion (PIT), and Crevice Corrosion (CC).

Microbiologically Influenced Corrosion (MIC) – a Localized Corrosion (LC) piping component degradation mechanism that occurs when the water source is not treated with biocides, or in the presence and/or intrusion of organic matter (i.e., raw water), when the operating temperature is < 150 °F, with low or intermittent flow and a pH of < 10.

National Board Inspection Code – The inspection code for the repair of pressure vessels and components required by the Commonwealth of Massachusetts.

Nominal Operating Pressure – for Class 1 systems, the range of pressures that may normally be expected when the system is known to be operating at 100% reactor power.

Nondestructive Examination – an examination by the visual, surface, or volumetric method.

Open Ended – a condition of piping or lines that permits free discharge to atmospheric or containment atmosphere.

Owner – the organization legally responsible for the construction and/or operation of a nuclear facility including but not limited to one who has applied for, or who has been granted, a construction permit or operating license by the regulatory authority having lawful jurisdiction (i.e., Entergy Nuclear).

Pitting Corrosion (PIT) – a Localized Corrosion (LC) piping component degradation mechanism that occurs when the potential exists for low flow, and oxygen or oxidizing species are present, and initiating contaminants (e.g., fluoride or chloride) are present.

Preservice Inspection (PSI) – those Nondestructive Examinations (NDE) including visual examinations performed on certain ASME Class 1, 2, 3 and MC components and their supports once, prior to initial plant operations as part of the Preservice Inspection Program, or following a component repair, replacement or modification. The results of these examinations provide a baseline for comparison to subsequent ISI examinations.

Pressure Test Program – a portion of the overall ISI Program which identifies the components and portions of piping in ASME Class 1, 2 and 3 systems, which are subject to various pressure tests during the 10-Year Interval. These tests include the pneumatic, leakage, functional or inservice types.

Primary Water Stress Corrosion Cracking (PWSCC) – a Stress Corrosion Cracking (SCC) piping component degradation mechanism that occurs when the piping or weld material is Alloy 600, 182, or 82, and the material is exposed to primary water at > 570 °F, and the material is mill-annealed and cold-worked, or the material is cold-worked and welded without stress relief.

Regulatory Authority – a Federal government agency empowered to issue and enforce regulations affecting the design, construction, and operation of nuclear power plants (i.e. United States Nuclear Regulatory Commission, USNRC).

Regulatory Issue Summaries – document NRC endorsement of the resolution of issues addressed by industry-sponsored initiatives, solicit voluntary licensee participation in staff-sponsored pilot programs, inform licensee of opportunities for regulatory relief, announce staff technical or policy positions not previously communicated to industry or not broadly understood, and address matters previously reserved for administrative letters.

Relief Request – a written request submitted to the regulatory authority which identifies specific components that cannot be examined or tested in accordance with ASME Section XI or Regulatory augmented requirements. It includes the reason these requirements cannot be met and technical justification for performing an alternative to the requirements.

Relevant Condition – a condition observed during a visual examination that requires supplement examination, corrective measure, and correction by repair/replacement activities, or analytical evaluation

Repair – the process of restoring a nonconforming item by welding, brazing, or metal removal such that existing design requirements are met.

Repair/Replacement Organization – the organization that performs repair/replacement activities under the provisions of the Owners Quality Assurance Program. The Owner may be the Repair/Replacement Organization.

Safe End – a metallic transition piece used to facilitate the welding of dissimilar metals in pipes, nozzles, valves, and fittings.

Safety Evaluation /Safety Evaluation Report (SER) – NRC safety evaluations (SEs) provide the regulatory bases for NRC decisions in licensing actions such as amendments, exemptions and relief requests. Safety Evaluation Reports (SERs) are generally used for more significant licensing actions such as initial licenses and renewed operating licenses. The distinction between an SE and SER is that the SER is issued as a NUREG series report. The SEs and SERs are valuable in that they provide the bases for the staff's decisions.

Source Document – any document containing requirements to which Entergy is committed or which apply to PNPS by virtue of law, such as federal, state and local laws and regulations.

Stress Corrosion Cracking (SCC) – an ASME Code Case N-578 piping component degradation mechanism category consisting of various types: External Chloride Corrosion Cracking (ECSCC), Primary Water Stress Corrosion Cracking (PWSCC), Intergranular Stress Corrosion Cracking (IGSCC), and Transgranular Stress Corrosion Cracking (TGSCC).

Structural Discontinuity Welds – include circumferential weld joints at pipe to vessel nozzle, pipe to valve body, pipe to pump casing, pipe to fittings and pipe to pipe of different schedule wall thickness.

Structural Integrity Test – the initial or subsequent pressure test of a containment structure to demonstrate the ability to withstand prescribed loads.

System Functional Test – A pressure test conducted to verify operability in systems (or components) not required to operate during normal plant operation while under system operating pressure [IWA-5211(b)].

System Hydrostatic Test – A pressure test conducted during a plant shutdown at an elevated test pressure [IWA-5211(b)].

System Leakage Test – A pressure test conducted while the system is in operation, during a system operability test, or while the system is at rest conditions using an external pressurization source [IWA-5211(a)].

System Pneumatic Test – An air pressure test conducted in lieu of a system leakage test or a system hydrostatic test for Class 2 and 3 systems [IWA-5211(c)].

Technical Position – an ISI Program record that documents the details of positions taken by Entergy with respect to generalized Code requirements, and do not conflict with code requirements. These records amplify the Code requirements and provide consistent guidance for the implementation of the requirement.

Terminal Ends – the extremities of piping runs that connect structures, components or pipe anchors, each of which acts as a rigid restraint or provides at least 2 degrees of restraint to piping due to piping thermal expansion.

Test – a procedure to obtain information, through measurement or observation to determine the operational readiness of a component or system while under controlled conditions.

Thermal Fatigue (TF) – an ASME Code Case N-578 piping component degradation mechanism category consisting of various types: Thermal Stratification, Cycling, and Striping (TASCS), and Thermal Transients (TT).

Thermal Stratification, Cycling, and Striping (TASCS) – a Thermal Fatigue (TF) piping component degradation mechanism that occurs when piping is > NPS 1, and the pipe segment has a slope < 45° from horizontal (includes elbow or tee into a vertical pipe), and the potential exists for low flow in a pipe section connected to a component allowing mixing of hot and cold fluids, or the potential exists for leakage flow past a valve (i.e., in-leakage, out-leakage, cross-leakage) allowing mixing of hot and cold fluids, or the potential exists for convection heating in dead-ended pipe sections connected to a source of hot fluid, or the potential exists for two phase (steam / water) flow, or the potential exists for turbulent penetration in branch pipe connected to header piping containing hot fluid with high turbulent flow, and calculated or measured ΔT is > 50°F, and the Richardson number is > 4.0.

Thermal Transients (TT) – a Thermal Fatigue (TF) piping component degradation mechanism that occurs at an operating temperature of > 270 °F for stainless steel, or >220 °F for carbon steel, and when the potential exists for relatively rapid temperature changes (including cold fluid injection into a hot pipe segment, or hot fluid injection into a cold pipe segment), and when the average temperature difference is > 200 °F for stainless steel, or >150 °F for carbon steel.

Topical Design Basis Document (TDBD) – A controlled document containing a consolidated summary of the current design and licensing basis for topical areas that are not associated with a specific system. Typical examples of "topical" subjects include: Accident Analysis, Environment Qualification, Missile Hazards, Human Factors, Inservice Inspection, etc. The TDBD states the "design basis", the reason and rational describing why the various design requirements have been applied to the system and related components designs.

Transgranular Stress Corrosion Cracking (TGSCC) – a Stress Corrosion Cracking (SCC) piping component

degradation mechanism that occurs at an operating temperature of > 150 °F, and when tensile stress (including residual stress) is present, and halides (e.g., fluoride, chloride) are present, or caustic (e.g., NaOH) is present, and oxygen or oxidizing species are present (only required to be present in conjunction with halides, not required with caustic).

Verify – to determine that a particular action has been performed in accordance with the rules and requirements of Section XI either by witnessing the action or by reviewing records.

VT-1 – A visual examination capable of achieving a resolution to discern a 1/32" black line on a gray card resolution (one-mil resolution may be substituted). It determines the condition of a part, component, or surface; including such conditions as cracks, wear, corrosion, erosion, or physical damage on the surfaces of the part or component.

VT-2 – A visual examination conducted to detect evidence of leakage from pressure retaining components, with or without leakage collection systems, as required during the conduct of a system pressure test.

VT-3 – A visual examination to determine the general mechanical and structural condition of components, such as the verification of clearances, settings, physical displacements, loose or missing parts, debris, corrosion, wear, erosion, or the loss of integrity at bolted or welded connections. A resolution demonstration is not required for a VT-3.