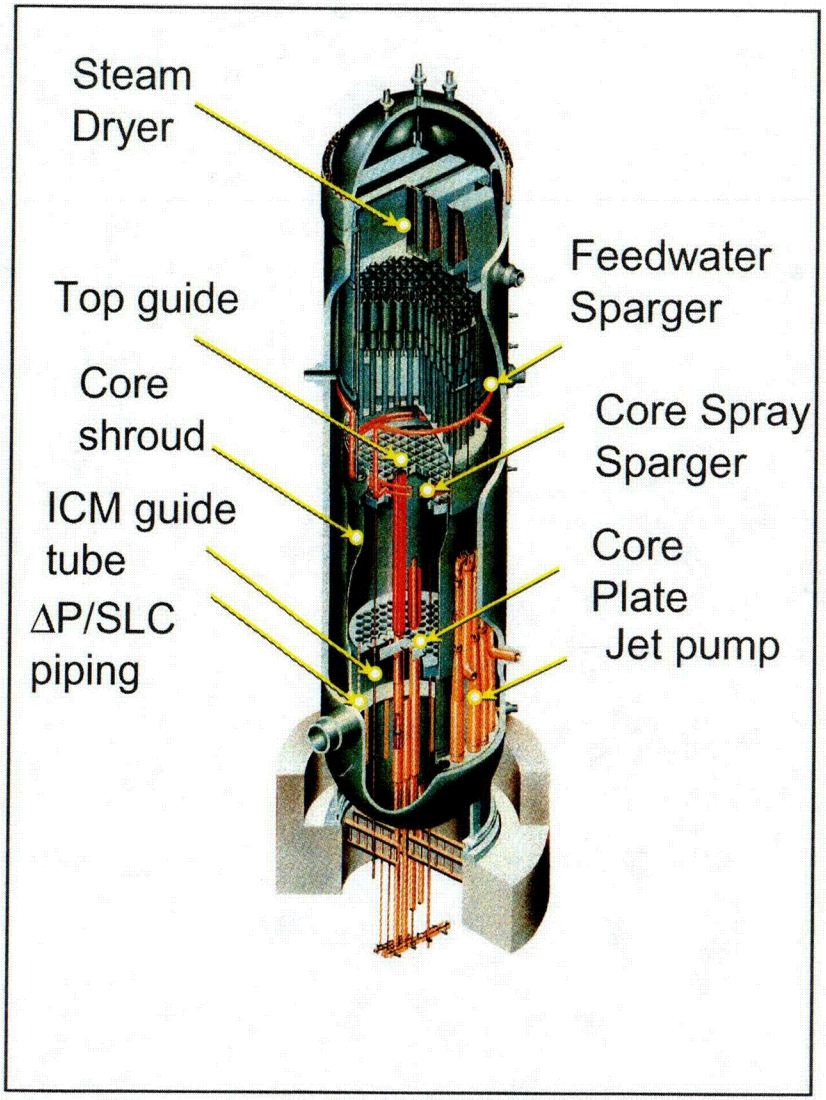

BWR Vessel and Internals Project (BWRVIP)

BWRVIP/NRC Coordination Meeting
NRC Offices
Rockville, MD
June 14, 2005

C01

Agenda

1:00 p.m.	Introductions/Meeting Objectives
1:15 p.m.	BWRVIP Approach to Management of Material Degradation
2:00 p.m.	BWRVIP Status and Future Direction
2:30 p.m.	BWRVIP/NRC Successes, Challenges and Approach for the Future
3:30 p.m.	Open Discussion/Action Item Identification
4:00 p.m.	Adjourn

Copyright © 2005 Electric Power Research Institute, Inc. All rights reserved.

Meeting Objectives

- Review BWRVIP approach to management of materials degradation
- Summarize BWRVIP status and future direction
- Agree on BWRVIP/NRC approach for the future
- Assure industry and NRC alignment on BWRVIP program expectations

Copyright © 2005 Electric Power Research Institute, Inc. All rights reserved.

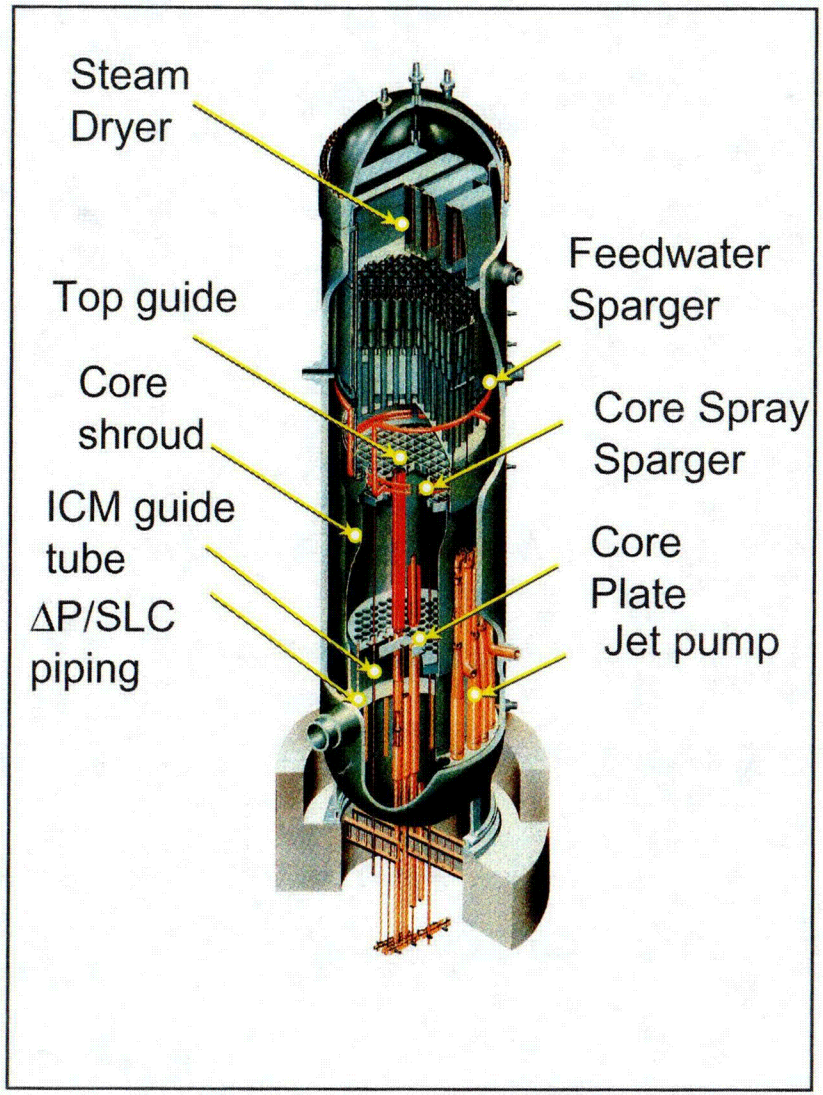

BWRVIP Approach to Management of Material Degradation

C02

BWRVIP History

- IGSCC in austenitic piping was a major issue for BWRs in the 1980s – susceptibility of reactor internals to IGSCC was also recognized by EPRI and the BWROG
- Shroud cracking in 1993-1994 confirmed that IGSCC of internals is a significant issue for BWRs
- BWR utility executives formed the BWRVIP in mid-1994 to proactively address BWR reactor vessel and internals material condition issues
- The goal was to lead industry toward proactive generic resolution of vessel and internals material condition issues with generic, cost-effective strategies

Copyright © 2005 Electric Power Research Institute, Inc. All rights reserved.

Capacity Factor Losses in BWRs

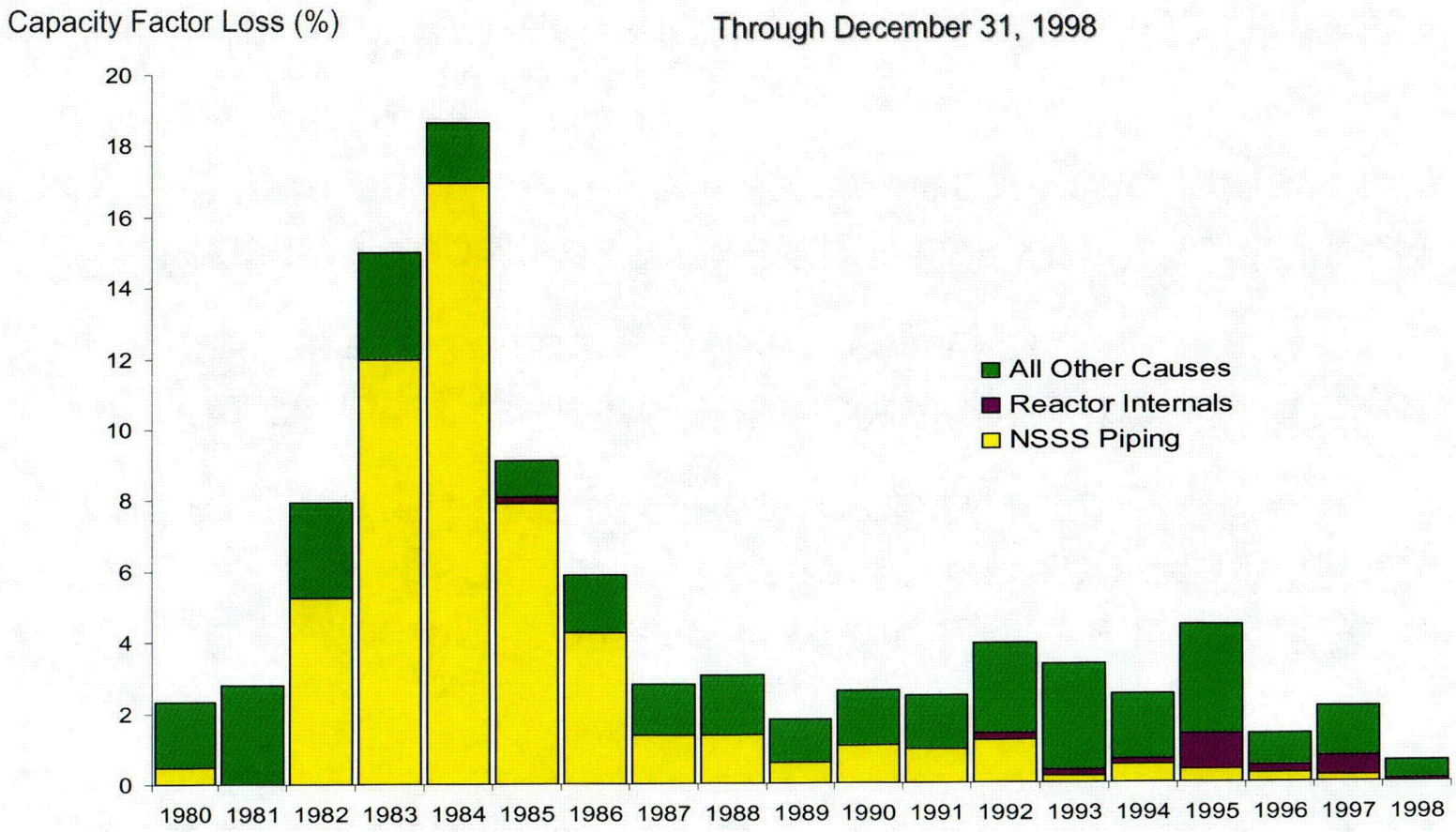

Copyright © 2005 Electric Power Research Institute, Inc. All rights reserved.

EPRI

C03

BWRVIP Objectives

- Lead industry toward proactive generic resolution of vessel and internals material condition issues
- Identify or develop generic, cost-effective strategies from which each operating plant will select the alternative most appropriate to their needs
- Serve as a focal point for the regulatory interface with the industry in BWR vessel and internals material condition issues (including license renewal)
- Share information among members to obtain useful data from many sources

Copyright © 2005 Electric Power Research Institute, Inc. All rights reserved.

Determination of BWRVIP Scope

- Safety assessment (BWRVIP-06) performed in 1995
- Assessment identified components that are necessary for safe operation and shutdown of the reactor
  - Maintain coolable geometry
  - Maintain rod insertion times
  - Maintain reactivity control
  - Assure core cooling
  - Assure instrumentation availability
- Some components (e.g., feedwater spargers) are not a safety issue

Copyright © 2005 Electric Power Research Institute, Inc. All rights reserved.

Safety Assessment (BWRVIP-06) Evaluation Basis

- Internal component locations assumed to be fully failed and the resulting safety consequences were evaluated
- Bounding characteristics of a location failure were assumed to assure a conservative assessment
- Failures evaluated are beyond the current design or licensing basis
- All reasonably postulated events were considered
- Followed up with a quantitative risk assessment (BWRVIP-09)

Copyright © 2005 Electric Power Research Institute, Inc. All rights reserved.

Component Prioritization Matrix

Priority	Component
High	Shroud
	Core Spray Piping and Sparger
	Shroud Support
	Top Guide
	Core Plate
	SLC
Medium	Jet Pump Assembly
Low	CRD Guide Tube
	CRD Stub Tube
	In-Core Housing
	Dry Tube
	Instrument Penetrations
	Vessel ID Brackets
	LPCI Coupling

Copyright © 2005 Electric Power Research Institute, Inc. All rights reserved.

Approach for Component Degradation Management

Assessment --	what needs to be inspected, when it needs to be inspected, inspection options, how to disposition observed degradation
Inspection --	how to inspect, what equipment and techniques are available, what are the associated uncertainties
Repair/replace --	what repair/replacement techniques are available and what are the associated requirements that must be met
Mitigation --	how can SCC degradation be prevented or reduced

Copyright © 2005 Electric Power Research Institute, Inc. All rights reserved.

BWRVIP Guidelines to Manage Degradation

Component	Assessment (I&E) Guidelines	Inspection Guidelines	Repair/Replace Design Criteria	Mitigation Recommendations
Core shroud	BWRVIP-76	BWRVIP-03	BWRVIP-02/-04-A	BWRVIP-62/-130
Core spray	BWRVIP-18	BWRVIP-03	BWRVIP-16/-19/-34	N/A
Shroud support	BWRVIP-38/-104	BWRVIP-03	BWRVIP-52	BWRVIP-62/-130
Top Guide	BWRVIP-26-A	BWRVIP-03	BWRVIP-50	N/A
Core Plate	BWRVIP-25	BWRVIP-03	BWRVIP-50	BWRVIP-62/-130
SLC	BWRVIP-27-A	BWRVIP-03	BWRVIP-53	BWRVIP-62/-130
Jet pump assembly	BWRVIP-41	BWRVIP-03	BWRVIP-51	BWRVIP-62/-130
CRD guide/stub tube	BWRVIP-47-A	BWRVIP-03	BWRVIP-17/-55/-58	BWRVIP-62/-130
In-core housing/dry tube	BWRVIP-47-A	BWRVIP-03	BWRVIP-17/-55	BWRVIP-62/-130
Instrument penetrations	BWRVIP-49-A	BWRVIP-03	BWRVIP-57	BWRVIP-62/-130
LPCI coupling	BWRVIP-42	BWRVIP-03	BWRVIP-56	N/A
Vessel ID brackets	BWRVIP-48-A	BWRVIP-03	BWRVIP-52	BWRVIP-62/-130
Reactor pressure vessel	BWRVIP-74-A*	N/A	N/A	N/A

*for license renewal

Copyright © 2005 Electric Power Research Institute, Inc. All rights reserved.

BWRVIP Guidelines

- I&E guidelines
  - What/when to inspect
  - Flaw evaluations
- NDE guidelines
  - How to implement inspection methods
- Repair guidelines
  - How to repair if necessary
- Mitigation guidelines
  - Criteria for effective HWC, NMCA, etc.

Copyright © 2005 Electric Power Research Institute, Inc. All rights reserved.

Contents of I&E Guidelines

- Description of component
- Discussion of susceptibility to degradation
- Discussion of consequences of failure of each location
- Inspection and performance history
- Inspection requirements – method and frequency
- Evaluation methods – Section XI, where applicable
- License renewal appendices

Copyright © 2005 Electric Power Research Institute, Inc. All rights reserved.

Supporting Documents

- Repair design criteria
- NDE guidelines (BWRVIP-03)
- Crack growth rate evaluations (stainless steel, nickel base, low alloy steel)
- Mitigation activities
  - Technical basis for inspection relief with hydrogen water chemistry (BWRVIP-62)
  - BWR water chemistry guidelines (BWRVIP-130)

Copyright © 2005 Electric Power Research Institute, Inc. All rights reserved.

Utility Program Implementation Guidance

- BWRVIP-94 establishes framework for structuring plant-specific BWRVIP program:
  - Develop/strengthen inspection program consistent with BWRVIP guidelines
  - Implement BWRVIP guidelines (as approved by Executive Committee) within two refueling outages
  - Notify NRC within 45 days of plans not to implement NRC-approved guidelines
  - Document technical justification for deviations from guidelines

Copyright © 2005 Electric Power Research Institute, Inc. All rights reserved.

Independent Program Review

- INPO performing reviews of U. S. utility BWRVIP programs
  - Independent assessment for plants
  - Assurance to regulators that inspections are being performed
  - Feedback to BWRVIP
- Initial INPO review for all U. S. BWR plants has been completed
- Second round of INPO reviews in progress
- Approximately 8 reviews per year
- INPO lessons learned and utility experience is being incorporated into revised BWRVIP reports (including BWRVIP-94)

Copyright © 2005 Electric Power Research Institute, Inc. All rights reserved.

BWRVIP/NRC Interactions

- Numerous technical meetings, conference calls, RAIs/responses, SEs, etc.
- NRC attendance at select BWRVIP meetings
- Detailed BWRVIP technical review session for NRC headquarters and regional staff (October 2002 – 257 slides)

Copyright © 2005 Electric Power Research Institute, Inc. All rights reserved.

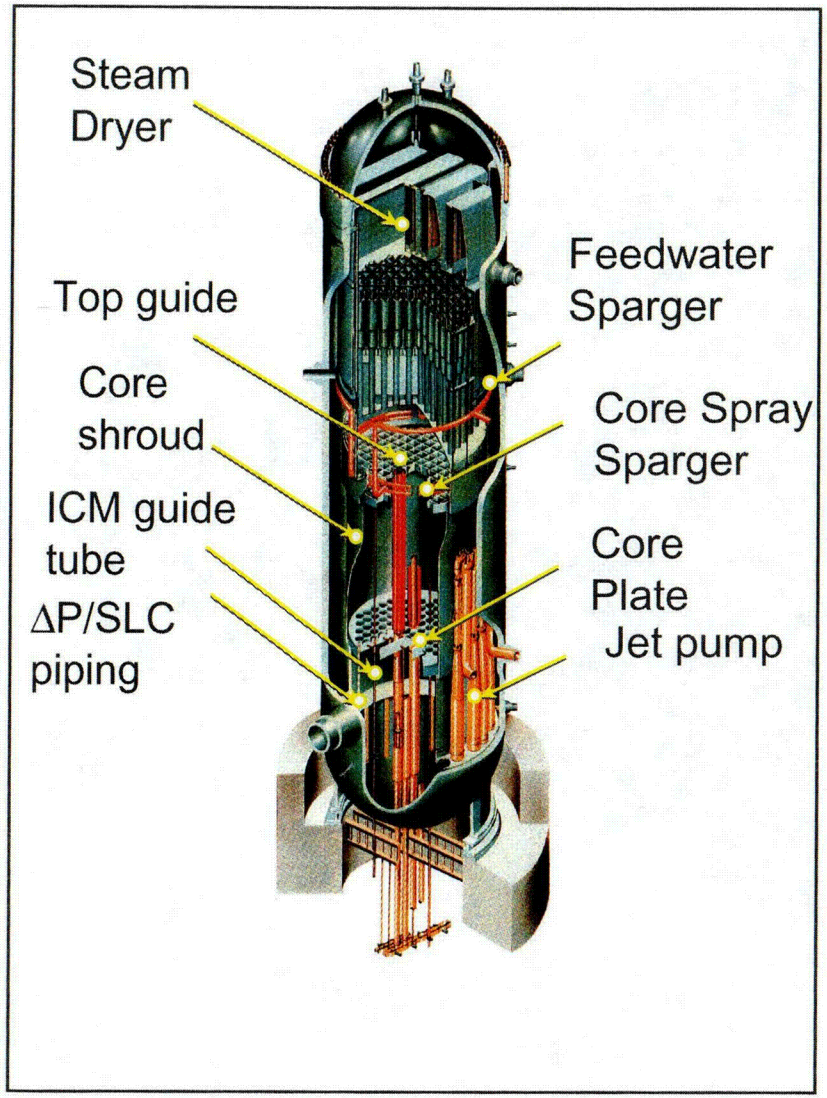

BWRVIP Status and Future Direction

COK

BWRVIP

An international program for managing BWR vessel, internals and piping material condition issues

Copyright © 2005 Electric Power Research Institute, Inc. All rights reserved.

BWRVIP Member Utilities

U. S. (13 utilities, 34 units)

- Constellation Nuclear, Nine Mile Point LLC
- DTE Energy
- Energy Northwest
- Entergy
- Exelon
- FirstEnergy
- Nebraska Public Power District
- Nuclear Management Co.
- PPL Susquehanna, LLC
- Progress Energy
- PSEG Nuclear
- Southern Nuclear Company
- Tennessee Valley Authority

International (12 utilities, 44 units)

- BKW FMB Energie AG – Switzerland
- Chubu Electric Power Company - Japan
- Chugoku Electric Power Company - Japan
- Comision Federal de Electricidad - Mexico
- Forsmarks Kraftgrupp AB - Sweden
- Iberdrola Generation - Spain
- Japan Atomic Power Company – Japan
- Kernkraftwerk Leibstadt – Switzerland
- OKG Aktiebolag - Sweden
- Taiwan Power Company - Taiwan
- Tohoku Electric Power Company - Japan
- Tokyo Electric Power Company - Japan

Copyright © 2005 Electric Power Research Institute, Inc. All rights reserved.

BWRVIP Utility Participation

- All U. S. BWR utilities actively participate in BWRVIP
- Most international BWR utilities participate in BWRVIP
  - Funding
  - Full member participation
  - Sharing of experience and data
  - Sharing of R&D results

Copyright © 2005 Electric Power Research Institute, Inc. All rights reserved.

BWRVIP Organizational Structure

Utility Executive Committee
Utility Executive Oversight Committee

Chairman

Vice Chairman

Assessment Committee	Mitigation Committee	Integration Oversight
Executive Chairman	Executive Chairman	Executive Chairman
Technical Chairman	Technical Chairman	Technical Chairman
EPRI Task Manager	EPRI Task Manager	EPRI Task Manager

Copyright © 2005 Electric Power Research Institute, Inc. All rights reserved.

BWRVIP Executive Oversight Committee Members

- Bill Eaton, Entergy, BWRVIP Chairman
- Lewis Sumner, Southern Nuclear
- Al Wrape, PPL Susquehanna
- Rick Libra, DTE Energy
- Amir Shahkarami, Exelon

Copyright © 2005 Electric Power Research Institute, Inc. All rights reserved.

BWRVIP Reports Transmitted to the NRC in 2004 and 2005

1. "BWR Vessel and Internals Inspection Summaries for Spring 2002 and Fall 2002 Outages," February 2004.
2. "BWRVIP-03, Revision 7: BWR Vessel and Internals Project, Reactor Pressure Vessel and Internals Examination Guidelines," EPRI Technical Report 1009910, December 2004.
3. "Hope Creek Flux Wire Dosimeter Activation Evaluation of Cycle 1," TransWare Enterprises Inc. Report TWE-PSE-001-R-001, Revision 0.
4. "BWRVIP-26-A: BWR Vessel and Internals Project, BWR Top Guide Inspection and Flaw Evaluation Guidelines," EPRI Technical Report 1009946, November 2004.
5. "BWRVIP-47-A: BWR Vessel and Internals Project, BWR Lower Plenum Inspection and Flaw Evaluation Guidelines," EPRI Technical Report 1009947, November 2004.
6. "BWRVIP-48-A: BWR Vessel and Internals Project, Vessel ID Attachment Weld Inspection and Flaw Evaluation Guidelines," EPRI Technical Report 1009948, November 2004.

Copyright © 2005 Electric Power Research Institute, Inc. All rights reserved.

BWRVIP Reports Transmitted to the NRC in 2004 and 2005 (continued)

7. "BWRVIP-128: BWR Vessel and Internals Project, Updated Fluence Calculations For Supplemental Surveillance Capsules D, G, and H Using RAMA Fluence Methodology," EPRI Technical Report 1010997, August 2004.
8. "BWRVIP-138: BWR Vessel and Internals Project, Updated Jet Pump Beam Inspection and Evaluation Guidelines," EPRI Technical Report 1008213, December 2004.
9. "BWR Vessel and Internals Inspection Summaries for Spring 2003 and Fall 2003 Outages," December 2004.
10. "BWRVIP-18-A: BWR Vessel and Internals Project, BWR Core Spray Internals Inspection and Flaw Evaluation Guidelines, " February 2005.
11. "BWRVIP-42-A: BWR Vessel and Internals Project, LPCI Coupling Inspection and Flaw Evaluation Guidelines," February 2005.
12. "BWR Vessel and Internals Inspection Summaries for Spring 2004 Outages," March 2005.

Copyright © 2005 Electric Power Research Institute, Inc. All rights reserved.

BWRVIP Reports Transmitted to the NRC in 2004 and 2005 (continued)

13. "BWRVIP-139: BWR Vessel and Internals Project, Steam Dryer Inspection and Flaw Evaluation Guidelines," EPRI Technical Report 1011463, April 2005.
14. Revised Section 4.0 "Consideration of Loose Parts" of BWRVIP-06-A: BWR Vessel and Internals Project, Safety Assessment of BWR Reactor Internals, May 2005.

Copyright © 2005 Electric Power Research Institute, Inc. All rights reserved.

Update of BWRVIP Reports Expected to be Submitted to the NRC in 2005

- BWRVIP-02-A: Core Shroud Repair Design Criteria
- BWRVIP-16-A: Core Spray Replacement Design Criteria
- BWRVIP-19-A: Core Spray Repair Design Criteria
- BWRVIP-41, Revision 1: Jet Pump I&E Guideline
- BWRVIP-50-A: Top Guide/Core Plate Repair Design Criteria
- BWRVIP-51-A: Jet Pump Repair Design Criteria
- BWRVIP-52-A: Shroud Support and Vessel Bracket Repair Design Criteria
- BWRVIP-53-A: SLC Repair Design Criteria
- BWRVIP-55-A: Lower Plenum Repair Design Criteria
- BWRVIP-56-A: LPCI Coupling Repair Design Criteria
- BWRVIP-57-A: Instrument Penetration Repair Design Criteria
- BWRVIP-58-A: CRD Weld Repair
- BWRVIP-75-A: Technical Basis for Revisions to Generic Letter 88-01 Inspection Schedules
- BWRVIP-95-A: Format and Content of Repair Design Submittals
- BWRVIP-96-A: Sampling and Analysis Guideline for Helium Determination

Previously planned to be submitted in 2005 but deferred to 2006:

- Steam Dryer Repair Design Criteria
- Assessment of Techniques for Welding Irradiated Materials
- Revised CRD Weld Repair Report
- Testing and Evaluation of BWR Supplemental Surveillance Program Capsules A, B and C
- BWRVIP-34-A: Core Spray Piping Weld Overlay
- BWRVIP-44-A: Underwater Welding
- BWRVIP-62-A: Technical Basis for Inspection Relief for BWR Internal Components with Hydrogen Injection
- BWRVIP-84-A: Material Guideline
- BWRVIP-97-A: Welding Guideline for Irradiated Material

Copyright © 2005 Electric Power Research Institute, Inc. All rights reserved.

Ongoing 2005 BWRVIP Major Tasks

- Crack Growth and Fracture Toughness in High Fluence BWR Materials*
- Continue Development of BWR Fluence Calculation Methodology
- Jet Pump Degradation Management*
- Continue Report Revisions with NRC Safety Evaluations Incorporated (Includes NRC Acceptance for Current and License Renewal Terms)
- Integrated Surveillance Program (ISP) – RPV Embrittlement
- Steam Dryer Inspection/Load Definition Coordination
- Continue NDE Technique Development and Maintenance
- Evaluation of Techniques for Welding Irradiated Material
- Evaluation of Alternative Techniques to Mitigate IGSCC*
- On-Line Noble Metal Chemical Application Demonstration Project*
- Radiolysis/ECP Code Improvement, Validation and Revision
- Sampling of Reactor Pressure Vessel and Steam Dryer Corrosion Products at Perry

*Key strategic activities

Copyright © 2005 Electric Power Research Institute, Inc. All rights reserved.

Approved 2006 BWRVIP Major Tasks

- Crack Growth and Fracture Toughness in High Fluence BWR Materials*
- Jet Pump Degradation Management*
- Continue Report Revisions with NRC Safety Evaluations Incorporated (Includes NRC Acceptance for Current and License Renewal Terms)
- Integrated Surveillance Program (ISP) – RPV Embrittlement
- Steam Dryer Coordination
- Reevaluation of Top Guide Grid Inspections for License Renewal
- Modeling of Weld Processes for Repairs to Irradiated Materials
- Qualification and Demonstration of Zirconia Coating Technology to Mitigate IGSCC*
- On-Line Noble Metal Chemical Application Demonstration Project*
- Radiolysis/ECP Code Improvement, Validation and Revision

*Key strategic activities

Copyright © 2005 Electric Power Research Institute, Inc. All rights reserved.

Future Direction of BWRVIP

- Serve as the focal point for material-related issues for BWR plants that affect pressure vessels, piping, RPV internals (including fluence) and water chemistry for current and license renewal terms
  - Maintain and update BWRVIP products
  - Serve as the lead for the U. S. industry on BWR material-related issues including OE and R&D – interface with USNRC, INPO, etc.
  - Serve as the repository for information on material-related issues for the worldwide fleet of BWRs
  - As requested, provide support to international members for interface with regulators on BWRVIP issues (e.g., HSK and ROC AEC)
- Coordinate BWR material-related activities with relevant PWR activities
- Support NEI 03-08 Initiative on Management of Materials Issues
- Provide technical support for INPO review visits that assess utility implementation of BWRVIP guidance

Copyright © 2005 Electric Power Research Institute, Inc. All rights reserved.

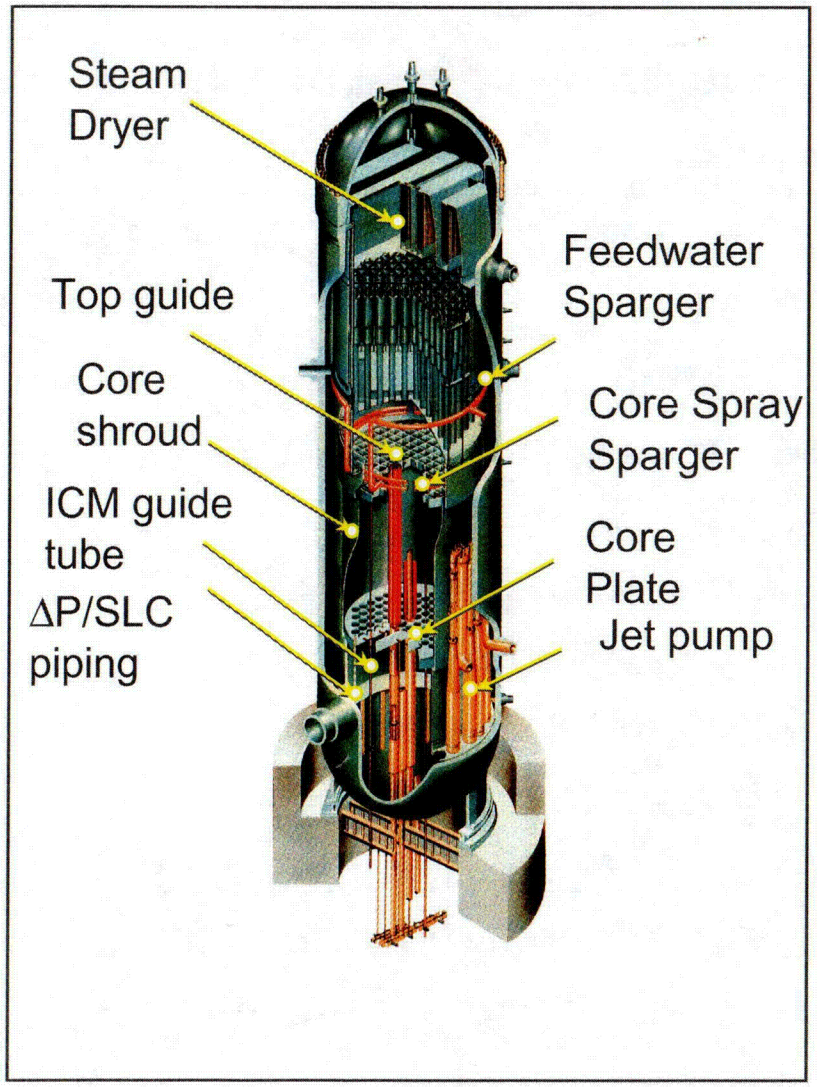

BWRVIP/NRC Successes, Challenges and Approach for the Future