AFFIDAVIT

STATE OF WASHINGTON)
) ss.
COUNTY OF BENTON)

1. My name is Jerald S. Holm. I am Manager, Product Licensing, for Framatome ANP Inc. ("FANP"), and as such I am authorized to execute this Affidavit.

2. I am familiar with the criteria applied by FANP to determine whether certain FANP information is proprietary. I am familiar with the policies established by FANP to ensure the proper application of these criteria.

3. I am familiar with the FANP information contained in viewgraphs presented to the NRC in a meeting on June 7 and 8 in Rockville, Md , and referred to herein as "Document." Information contained in this Document has been classified by FANP as proprietary in accordance with the policies established by FANP for the control and protection of proprietary and confidential information.

4. This Document contains information of a proprietary and confidential nature and is of the type customarily held in confidence by FANP and not made available to the public. Based on my experience, I am aware that other companies regard information of the kind contained in this Document as proprietary and confidential.

5. This Document has been made available to the U.S. Nuclear Regulatory Commission in confidence with the request that the information contained in this Document be withheld from public disclosure.

6. The following criteria are customarily applied by FANP to determine whether information should be classified as proprietary:

(a) The information reveals details of FANP's research and development plans and programs or their results.

(b) Use of the information by a competitor would permit the competitor to significantly reduce its expenditures, in time or resources, to design, produce, or market a similar product or service.

(c) The information includes test data or analytical techniques concerning a process, methodology, or component, the application of which results in a competitive advantage for FANP.

(d) The information reveals certain distinguishing aspects of a process, methodology, or component, the exclusive use of which provides a competitive advantage for FANP in product optimization or marketability.

(e) The information is vital to a competitive advantage held by FANP, would be helpful to competitors to FANP, and would likely cause substantial harm to the competitive position of FANP.

7. In accordance with FANP's policies governing the protection and control of information, proprietary information contained in this Document have been made available, on a limited basis, to others outside FANP only as required and under suitable agreement providing for nondisclosure and limited use of the information.

8. FANP policy requires that proprietary information be kept in a secured file or area and distributed on a need-to-know basis.

9. The foregoing statements are true and correct to the best of my knowledge, information, and belief.

SUBSCRIBED before me this 3rd

day of June, 2005.

Susan K. McCoy
NOTARY PUBLIC, STATE OF WASHINGTON
MY COMMISSION EXPIRES: 1/10/2008

SUSAN K. McCOY
COMMISSION EXPIRES
NOTARY
PUBLIC
1-10-08
STATE OF WASHINGTON

AREVA

AREVA

Applicability Framatome ANP Methods BWR EPU Conditions Introduction

Jerald S. Holm
Manager, Product Licensing
jerald.holm@framatome-anp.com
(509) 375-8142

Rockville, MD
June 7 & 8, 2005

AREVA

Introduction

> Objectives for meeting

- Understand perspectives on EPU vs Non-EPU conditions – NRC and FANP
- Summarize FANP analysis approach
  - Fuel vendor
  - Fuel only analyses
  - Plant/Cycle specific analyses – limited generic analyses
- Demonstrate that FANP methods are technically applicable and NRC approved for EPU conditions
  - EPU and Non-EPU range of conditions are essentially the same
- Respond to specific questions about FANP methods

AREVA

Agenda

> FANP Philosophy - Range of Applicability (Holm)

> FANP Procedures (Holm)

> FANP Fuel Licensing Analyses (Garrett)

> EPU and Non-EPU Analysis Conditions (Pruitt)

AREVA

Agenda (continued)

> NRC Questions

- 1. EPU Conditions (Grummer)
- 2. Non-EPU Conditions (Grummer)
- 3. Validation of MB2 for EPU (Grummer)
- 4. Reactivity-Void Coefficients (Grummer)
- 5. Void Quality Correlations (Keheley)
- 6. CHF/CPR Correlation (Keheley)
- 7. Two Phase Loss Coefficients (Keheley)
- 8. Bypass Modeling (Grummer)
- 9. SLMCPR Analysis (Garrett)

AREVA

Agenda (continued)

> Stability (Pruitt)

> Summary (Holm)

> NRC Feedback

Philosophy for Code and Methods Range of Applicability

> Codes and methods are subjected to a Verification and a Validation process
- Verification
  - The process of assuring that the code or method produces the intended result
- Validation
  - The process of assuring that a code or method produces results which are consistent with physical reality

Philosophy for Code and Methods Range of Applicability

> Verification
- Inspection of code or method; or
- Execution of test cases where result is known

> All FANP codes and methods have been verified

Philosophy for Code and Methods Range of Applicability

> Validation – two common approaches

> First approach

- Used to support empirical correlations such as CHF correlations
- Data which spans expected range of independent variables is used
- Explicit minimum and maximum values of each independent parameter defines range of applicability

Philosophy for Code and Methods Range of Applicability

> Validation – two common approaches

> Second approach

- Used to support codes or methods which have a solid theoretical foundation in conservation equations
  - Mass
  - Momentum
  - Energy
  - Neutrons
- Benchmark case(s) used to confirm theoretical foundation
- Each benchmark represents a *point* in the space to which the theoretical foundation applies
- Range of applicability is based on theoretical foundation, not the benchmark

Philosophy for Code and Methods Range of Applicability

> Framatome ANP topical reports have used both forms of validation
- First approach – validation based on data sets
  - Explicit ranges of applicability for each independent parameter
    - CHF correlation
    - Void-Quality correlation
    - Pressure Drop
- Second approach – validation based on benchmarks
  - Restrictions on the plant type and the event type
    - Neutronics
    - Transient
    - LOCA
    - Stability

Philosophy for Code and Methods Range of Applicability

> Range of applicability which needs to be justified based on criteria being satisfied
- MCPR
- Centerline Melt
- Peak Cladding Temperature

Philosophy for Code and Methods Range of Applicability

> Acceptable results are obtained by setting LCOs
- Operating MCPR limit
- Operating Fuel Design LHGR limit
- MAPLHGR

Use of NRC Approved BWR Methodology

> Primary goal is to use NRC approved methodology for all analyses

> Secondary goal is to inform customer when NRC approved methodology can not be used
- New generic topical report
- Or, plant specific LAR

Use of NRC Approved BWR Methodology

> Processes used to achieve goals
- Project Management Guidelines
- Design Implementation Process
- Engineering Guidelines
- Software Quality Assurance Program
- NRC SER Restrictions and Implementation

Use of NRC Approved BWR Methodology Project Management Guidelines

> Review meetings held to assure applicability of methodology
- Lead assembly projects
- Reload projects
- Engineering service projects

> Review performed for areas in Chapter 4 and 15 of Standard Review Plan
- Checklist
- Structure follows NRC approved topical report ANF-89-98(P)(A), *Generic Mechanical Design Criteria for BWR Fuel Designs*, May 1995

Use of NRC Approved BWR Methodology Design Implementation Process

> Review meetings held to assure applicability of methodology
  - Significant Design Changes

> Review performed for areas in Chapter 4 and 15 of Standard Review Plan

Use of NRC Approved BWR Methodology Engineering Guidelines

> Guidelines are developed to implement NRC approved methodology
  - Guidelines for all standard analyses
  - Reviewed by management and licensing to assure approved methodology is used appropriately
  - SER restrictions identified in guideline

Use of NRC Approved BWR Methodology Software Quality Assurance Program

> Computer codes are developed to implement NRC approved methodology
- A standard test suite used to assure continuity with code as used in NRC approved topical report
- Code reviewed to identify any changes in NRC approved method
- Appropriate SER restrictions implemented in code

Use of NRC Approved BWR Methodology NRC SER Restrictions and Implementation

> A summary of all SER restrictions for BWR methodology is maintained
- Each topical report listed
- SER restrictions stated
- Reference provided to where restriction is implemented
  - Guideline
  - Code

AREVA

AREVA

Framatome ANP (FANP) Fuel Licensing Analyses

Michael E. Garrett
Manager, BWR Safety Analysis
michael.garrett@framatome-anp.com
(509) 375-8294

Rockville, MD
June 7 & 8, 2005

AREVA

FANP Fuel Licensing Analyses
Presentation Goal

> Provide background information to facilitate follow-on discussions addressing NRC questions
- General licensing approach for FANP fuel
- Browns Ferry EPU fuel licensing approach
- Reload core design and analysis process
- Overview of safety analysis methodology
  - Major codes
  - Calculation process
  - Typical cycle-specific calculations

AREVA

Reload Core Licensing Approach

Reload Core Licensing Approach
Transition Cycle

> FANP currently is not a NSSS vendor (OEM) for any U.S. BWR

> FANP currently is the fuel vendor for several U.S. BWRs

> Introduction of FANP fuel requires confirmation that fuel-related and plant-related design and licensing criteria continue to be satisfied

> FANP licensing approach and analysis methodology was developed to support the introduction of FANP fuel into a BWR already licensed for operation in the U.S.

Reload Core Licensing Approach
Transition Cycle (continued)

> Maintain current plant licensing basis when possible

> Evaluate the introduction of FANP fuel per the requirements of 10 CFR 50.59
- Similar to approach used for any plant change
- Similar to approach used for each reload core design (except for scope)

> Identify plant safety analyses potentially affected by a fuel or core design change

> Assess impact on potentially affected safety analyses and repeat analyses as required

AREVA

Reload Core Licensing Approach
Transition Cycle (continued)

> Technical Specification changes generally limited to
- References to NRC-approved methods used to determine thermal limits specified in the COLR
- MCPR safety limit based on FANP methods
- Fuel design description

> COLR thermal limits are determined for the transition core based on analyses using NRC-approved methods

AREVA

Reload Core Licensing Approach
Transition Cycle (continued)

> Three steps performed as part of the transition process implement the licensing approach
- Establish current licensing basis
- Disposition of events
- Plant transition safety analysis

Reload Core Licensing Approach
Establish Current Licensing Basis

> Licensing basis consists of all analyses performed to demonstrate that regulatory requirements are met

> Licensing basis is defined in documents such as
- FSAR
- Technical Specifications
- Core Operating Limits Reports (COLRs)
- Technical Requirements Manual
- Cycle Reload Licensing Reports
- Extended Operating Domain (EOD) Reports (e.g. increased core flow operation)
- Equipment Out-of-Service (EOOS) Reports (e.g. feedwater heaters OOS)
- LOCA Analysis Reports

Reload Core Licensing Approach
Disposition of Events

> Review all event analyses in the current licensing basis

> Analyses are dispositioned as
- Not impacted by the change in fuel or core design
- Bounded by the consequences of another event
- Potentially limiting - reanalyze using FANP methodology

> Rated and off-rated conditions considered

> Results from the disposition of events define the safety analyses required for the transition cycle to address the change in fuel and core design

> Disposition of events is documented in calculation notebook and QA reviewed per FANP procedures

AREVA

Reload Core Licensing Approach
Plant Transition Safety Analysis

> Plant safety analyses are performed prior to the initial transition cycle design to support the introduction of FANP fuel
- Representative cycle design used in analyses
- Potentially limiting events from disposition are analyzed
- Analysis results may be used to disposition some events as non-limiting and not required for cycle-specific analyses
- Expected thermal limits ($MCPR_f$, $MCPR_p$, etc.) determined for normal operation
- Analyses performed for EOD and EOOS options
- Approach and basis for EOD/EOOS operating limits are established

> Results
- Identifies potentially limiting events that will be analyzed for the transition cycle core design
- Provides basis for events reanalyzed for each follow-on cycle

AREVA

Transition Cycle Analyses
Typical Disposition Conclusions

> Mechanical design

> Nuclear design
- Stability
- Shutdown margins

> Thermal-hydraulic design
- Hydraulic compatibility
- MCPR safety limit
- $MCPR_f$ (slow flow excursion)

> ASME overpressurization

> ATWS
- Overpressurization
- Standby liquid control system

Transition Cycle Analyses
Typical Disposition Conclusions

- Criticality analyses
  - New fuel storage
  - Spent fuel storage
- Anticipated operational occurrences
  - Load rejection no bypass
  - Turbine trip no bypass
  - Loss of feedwater heating
  - Inadvertent ECCS pump start
  - Control rod withdrawal error
  - Fuel assembly mislocation
  - Fuel assembly misorientation
  - Startup of idle recirculation loop
  - Feedwater controller failure

Transition Cycle Analyses
Typical Disposition Conclusions

- Design basis accidents
  - Control rod drop accident
  - Loss-of-coolant accident
  - Fuel handling accident
- Emergency operating procedures
  - Fuel dependent input parameters
- Post-fire safe shutdown (Appendix R)

Reload Core Licensing Approach
Follow-On Cycle

> Similar to transition core approach but generally with a reduced scope

> Disposition of events for transition cycle provides basis for analyses typically performed for follow-on reload cores

> All potentially limiting events are reanalyzed or justification provided for continued applicability of previous analysis

> If plant configuration or operational changes are planned during the refueling outage, a cycle-specific disposition of events is performed and additional analyses may be required

Reload Core Licensing Approach
Summary

> A fuel transition is addressed as a change in the plant design basis that is evaluated relative to the current plant licensing basis

> A systematic approach (disposition of events) is used to identify the impact of the change on the plant safety analyses that constitute the current plant licensing basis

> Potentially impacted safety analyses are reanalyzed with appropriate fuel and core characteristics to ensure that all design and licensing criteria continue to be satisfied

AREVA

Browns Ferry EPU Licensing Approach

AREVA

Browns Ferry Power Uprate
Licensing Approach

> TVA contracted GE Nuclear Energy (GENE) to perform a extended power uprate (EPU) for Browns Ferry Units 2 and 3 prior to FANP fuel contract

> GENE performed required safety analyses identified in the generically approved EPU approach

- Analyses assume a representative core of GE14 fuel

> GENE generated a series of plant-specific task reports to document the required safety analyses identified in the generically approved EPU approach

> Results from the task reports are summarized in a plant-specific uprate report prepared for submittal to the NRC

Browns Ferry Power Uprate
Licensing Approach

> Safety analyses performed for power uprate can be characterized as
- Fuel-related – Performed to demonstrate compliance with fuel or core design and licensing requirements
- Plant-related – Performed to demonstrate compliance with plant design and licensing requirements

> Plant-related analyses can be further characterized based on use of fuel design dependent input parameters
- Fuel design dependent analyses
- Fuel design independent analyses

Browns Ferry Power Uprate
Licensing Approach

> TVA contracted FANP to provide ATRIUM™-10 fuel for Browns Ferry Units 2 and 3
- Unit 3 startup in spring 2004 (not EPU)
- Unit 2 startup in spring 2005 (not EPU)

> To support EPU at Browns Ferry with ATRIUM-10 fuel, TVA also contracted FANP to
- Perform fuel-related uprate analyses for ATRIUM-10 fuel
- Review plant-related uprate analyses performed by GENE and determine if fuel design dependent
- If plant-related analysis is fuel design dependent, assess applicability of analysis for ATRIUM-10 fuel parameters
- If plant-related analysis is not applicable (not bounding) for ATRIUM-10 fuel parameters, TVA to contract for new analysis with bounding fuel parameters

Browns Ferry Power Uprate
Task Reports Reviewed

> Fuel-related task reports reviewed by FANP

Browns Ferry Power Uprate
Task Reports Reviewed

> Plant-related task reports reviewed by FANP

AREVA

Browns Ferry Power Uprate
Task Reports Reviewed

> Plant-related task reports reviewed by FANP *(continued)*

AREVA

Browns Ferry Power Uprate
Analyses Performed

> Fuel-related analyses

AREVA

Browns Ferry Power Uprate
Analyses Performed

> Fuel-related analyses *(continued)*

AREVA

Browns Ferry Power Uprate
Analyses Performed

> Plant-related analyses

AREVA

Browns Ferry Power Uprate
Licensing Approach

> FANP prepared a fuel supplement uprate report for NRC submittal that addresses the use of ATRIUM-10 fuel

- Provides results for fuel-related analyses for a representative core of ATRIUM-10 fuel
- Provides justification of continued applicability or assesses impact of fuel design on plant-related analyses
- All analyses identified in the base uprate submittal report were either justified to be applicable (bounding) for ATRIUM-10 fuel or reanalyzed for ATRIUM-10 fuel
- Table of contents is essentially the same for both the base and supplement report

AREVA

Browns Ferry Power Uprate
Summary

> The licensing approach for ATRIUM-10 fuel at Browns Ferry EPU conditions uses the same basic philosophy as used for reload core licensing

> Use of ATRIUM-10 fuel is addressed as a change in the plant design basis that is evaluated relative to EPU safety analyses

> A systematic approach (task report review) is used to identify the impact of the change on EPU safety analyses

> Potentially impacted safety analyses are reanalyzed with appropriate fuel and core characteristics to ensure that all design and licensing criteria continue to be satisfied

AREVA

Reload Core Design and Analysis Process

AREVA

Reload Core Design and Analysis Process

Key Steps

> Several steps in the core design and analysis process are directed towards ensuring that the planned scope, analysis methods, and input assumptions for the cycle safety analysis are valid

- **Project Initialization (Initial reload)**
- Fuel Mechanical Design (initial reload or design change)
- Preliminary Core Design
- **Plant Parameters Document**
- **Fuel Design Analysis Review**
- **Calculation Plan**
- Licensing Basis Core Design
- Safety Analyses
- Design and Licensing Reports
- Fuel Delivery
- Startup Support

Reload Core Design and Analysis Process

Project Initialization

> A Project Initialization meeting is conducted following finalization of a new or major revision to a contact (EMF-2911 Rev 3)

> Purpose
- Inform Engineering and Manufacturing of contractual provisions and schedule
- Identify any unique product, material, or commercial requirements
- Establish the need for any qualification or proof-of-fabrication activities

> Any unique engineering methodology, analysis, or reporting requirements should be identified (0315-02 Attch 3)

Reload Core Design and Analysis Process

Plant Parameters Document

> Defines plant configuration, operating conditions, and equipment performance characteristics used in FANP safety analyses

> Provides mechanism for utility to:
- Review and approve plant parameters used in safety analysis
- Determine when plant changes will impact safety analyses
- Notify FANP of planned plant changes during the next refueling outage

> FANP requests PPD updates for upcoming cycle (generally, a draft PPD with known changes is provided)

> Utility confirms or identifies PPD changes for upcoming cycle

> FANP reviews PPD changes and performs a disposition to identify any additional analyses required

> Ensures that FANP and utility have a mutual agreement on the plant configuration and operation basis used in safety analyses

Reload Core Design and Analysis Process

Fuel Design Analysis Review

> Primary purpose of the Fuel Design Analysis Review is to ensure that all analyses required to demonstrate compliance with design and licensing criteria are identified in the Calculation Plan (EMF-2911 Rev 3)

> Review includes
- Review design and identify appropriate criteria (0315-02 Attch 3)
- Review open issues in Correspondence Activity Tracking System
- Identify analyses required to demonstrate compliance with criteria (0315-02 Attch 7 and 9)
- Review methodology applicability and SER restrictions (0315-02 Attch 11)

> Preliminary Calculation Plan should be available prior to Review

> For initial reload, Review should be performed after completion of licensing basis determination and disposition of events

Reload Core Design and Analysis Process

Calculation Plan

> Defines the scope of the safety analyses to be performed for a specific reload including any additional analyses required due to PPD changes

> Provides cycle-specific reference identifying analyses to be performed, associated methodology, and key assumptions

> FANP provides draft calculation plan identifying all analyses to be performed for the cycle

> Following utility review and comment, final calculation plan is issued by FANP

> Assures that the work scope and analysis bases are understood and acceptable to all parties

Reload Core Design and Analysis Process
Summary

> The FANP core design and analysis process has procedurally controlled steps to ensure that the scope of safety analyses and applied methodology are appropriate to demonstrate that all design and licensing criteria are satisfied for the reload core design

Safety Analysis Methodology

Safety Analysis Methodology
Goals

> Perform analyses of anticipated operational occurrences (AOOs) to confirm or establish operating limits that:
- Adequately protect all fuel design criteria
- Ensure all licensing criteria are satisfied
- Promote economically efficient fuel cycles
- Provide operational flexibility

> Perform analyses of design basis accidents to confirm that results are within regulatory acceptable limits

> Perform analyses of special events to ensure regulatory requirements or industry codes are satisfied

Safety Analysis Methodology

> Safety analyses include
- Anticipated operational occurrence (AOO) analyses
- Accident analyses
- Special event analyses

> Safety analysis methodology includes
- Thermal-hydraulic analysis methodology
- Neutronic analysis methodology
- Transient analysis methodology
- LOCA analysis methodology

AOO Analyses

Typical Events and Applied Methodology

• Control rod withdrawal error • Loss-of-feedwater heating	Neutronic Methodology
• Load rejection without bypass • Turbine trip without bypass • Feedwater controller failure	System Transient Methodology
• Recirculation flow runup • Safety limit MCPR	Thermal-Hydraulic Methodology

Accident Analyses

Typical Events and Applied Methodology

• Loss-of-coolant-accident	LOCA Methodology
• Control rod drop accident • Fuel assembly loading accident • Fuel handling accident	Neutronic Methodology

Special Analyses

Typical Events and Applied Methodology

- Shutdown margin analysis
- Standby liquid control analysis
- Stability

Neutronics Methodology

- ASME overpressurization analysis
- ATWS overpressurization analysis

System Transient Methodology

Safety Analysis Methodology

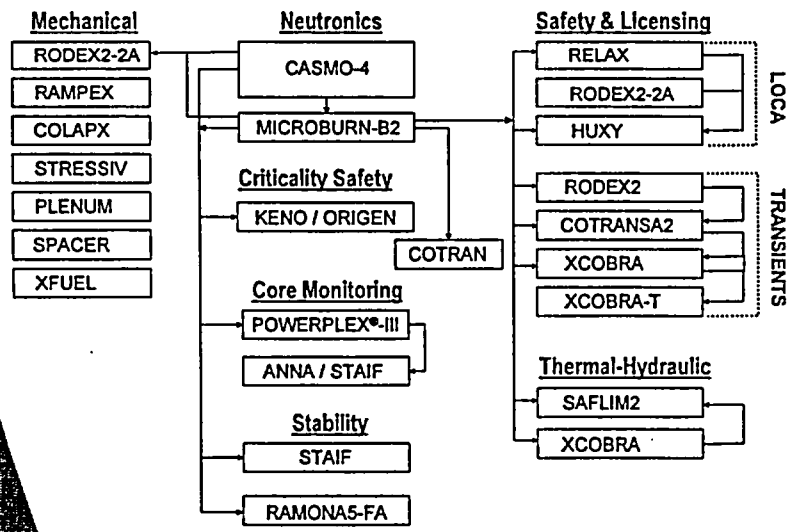

AREVA

Thermal-Hydraulic Analysis Methodology

AREVA

Thermal-Hydraulic Analysis Methodology

Major Computer Codes

Code	Use
XCOBRA	Predicts the steady-state thermal-hydraulic performance of BWR cores at various operating conditions and power distributions
SAFLIM2	Evaluate the safety limit MCPR (SLMCPR) which ensures that at least 99.9% of the fuel rods in the core are expected to have a MCPR value greater than 1.0

Thermal-Hydraulic Analysis Methodology

XCOBRA Computer Code

Description	XCOBRA predicts the steady-state thermal-hydraulic performance of BWR cores at various operating conditions and power distributions
Use	Evaluate the hydraulic compatibility of fuel designs. Evaluate core thermal-hydraulic performance (core pressure drop, core flow distribution, bypass flow, MCPR, etc.)
Documentation	XN-NF-CC-43(P), *XCOBRA Code Theory and User's Manual*
Acceptability	XN-NF-80-19(P)(A) Volume 3 Rev 2, *Exxon Nuclear Methodology for Boiling Water Reactors, THERMEX: Thermal Limits Methodology Summary Description,* January 1987 NRC accepts the use of XCOBRA based on the similarity of the computational models to those used in the approved code XCOBRA-T

XCOBRA Computer Code

Major Features

- Represents the core as collection of parallel flow channels
- Each flow channel can represent single or multiple fuel assemblies as well as the core bypass region
- Core flow distribution is calculated to equalize the pressure drop across each flow channel
- Pressure drop in each channel is determined through the use of the FANP thermal-hydraulic methodology
- Input includes fuel assembly geometry, pressure drop coefficients, and core operating conditions
- Water rods (or channels) can be explicitly modeled
- Calculates the flow and local fluid conditions at axial locations in each channel for use in evaluating MCPR

Thermal-Hydraulic Analysis Methodology
SAFLIM2 Computer Code

Description	SAFLIM2 is a computer code used to determine the number of fuel rods in the core expected to experience boiling transition for a specified core MCPR
Use	Evaluate the safety limit MCPR (SLMCPR) which ensures that at least 99.9% of the fuel rods in the core are expected to have a MCPR value greater than 1.0
Documentation	ANF-2392(P), *SAFLIM2: A Theory, Programmer's, and User's Manual*
Acceptability	ANF-524(P)(A) Rev 2 and Supplements, *ANF Critical Power Methodology for Boiling Water Reactors,* November 1990 The safety evaluation by the NRC for the topical report approves the SAFLIM2 methodology for licensing applications

SAFLIM2 Computer Code
Major Features

- Convolution of uncertainties via a Monte Carlo technique
- Consistent with POWERPLEX® CMSS calculation of MCPR
- Deterministic approach provides accurate determination of rods in boiling transition
- Appropriate critical power correlation used directly to determine if a rod is in boiling transition
- BT rods for all bundles in the core are summed
- Non-parametric tolerance limits used to determine the number of BT rods with 95% confidence
- Explicitly accounts for channel bow
- New fuel designs easily accommodated

Thermal-Hydraulic Analysis Methodology
Flow-Dependent MCPR ($MCPR_f$) Analysis

- > $MCPR_f$ limit is established to provide protection against fuel failures during a slow core flow excursion (i.e., SLMCPR is not violated during the event)
- > Analysis assumes core flow increases to the maximum physically attainable value
- > Limit is a function of initial core flow; a larger core flow increase (and resulting power increase) occurs from reduced core flow
- > XCOBRA computer code used to calculate change in CPR
- >

Thermal-Hydraulic Analysis Methodology
Flow-Dependent MCPR ($MCPR_f$) Analysis

Thermal-Hydraulic Analysis Methodology
Flow-Dependent MCPR ($MCPR_f$) Analysis

Thermal-Hydraulic Analysis Methodology
SLMCPR Analysis

- The purpose of the safety limit MCPR (SLMCPR) is to protect the core from boiling transition during both normal operation and anticipated operational occurrences (transients)
- At least 99.9% of the rods in the core are expected to avoid boiling transition when the minimum CPR during the transient is greater than the SLMCPR
- The SLMCPR analysis is performed each cycle using core and fuel design cycle-specific characteristics

Thermal-Hydraulic Analysis Methodology
SLMCPR Analysis

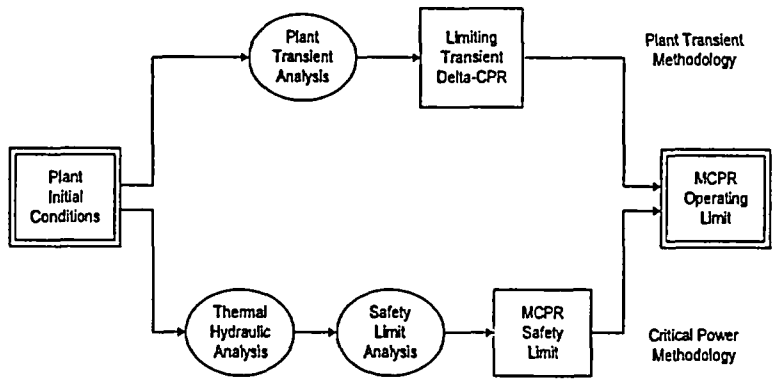

Thermal-Hydraulic Analysis Methodology
SLMCPR Analysis

Code	Use
MICROBURN-B2	Provides radial peaking factor and exposure for each bundle in the core and the core average axial power shape
CASMO-4	Provides local peaking factor distribution for each fuel type
XCOBRA	Provides hydraulic demand curves for each fuel type
SLPREP	Automation code which obtains neutronic data from MICROBURN-B2 and CASMO-4 and prepares SAFLIM2 input
SAFLIM2	Calculates the fraction of rods in boiling transition (BT) for a specified SLMCPR and exposure

Thermal-Hydraulic Analysis Methodology
SLMCPR Analysis

Thermal-Hydraulic Analysis Methodology
SLMCPR Analysis

AREVA

Thermal-Hydraulic Analysis Methodology
SLMCPR Analysis

Scope of analyses performed on a cycle-specific basis

AREVA

Neutronic Analysis Methodology

Neutronic Analysis Methodology
Major Computer Codes

Code	Use
CASMO-4	Performs fuel assembly burnup calculations and calculates nuclear data for MICROBURN-B2
MICROBURN-B2	Performs 3-dimensional steady-state reactor core neutronic analyses for assessing impact on thermal limits during localized and quasi-steady-state events
COTRAN	Determine core power response during a control rod drop accident
STAIF	Calculates the core and channel decay ratio (frequency domain)

Neutronic Analysis Methodology
CASMO-4 Computer Code

Description	Multi-group, 2-dimensional transport theory code
Use	Performs fuel lattice burnup calculations and generates nuclear data for use in MICROBURN-B2
Documentation	EMF-2158(P)(A) Rev 0, *Siemens Power Corporation Methodology for Boiling Water Reactors: Evaluation and Validation of CASMO-4/MICROBURN-B2*, October 1999
Acceptability	The safety evaluation by the NRC for the topical report EMF-2158(P)(A) approves the CASMO-4/ MICROBURN-B2 methodology for licensing applications

Neutronic Analysis Methodology
MICROBURN-B2 Computer Code

Description	A 3-dimensional, two group, diffusion theory code
Use	Performs 3-dimensional steady-state reactor core neutronic analyses for assessing impact on thermal limits during localized and quasi-steady-state events
Documentation	EMF-2158(P)(A) Rev 0, *Siemens Power Corporation Methodology for Boiling Water Reactors: Evaluation and Validation of CASMO-4/MICROBURN-B2*, October 1999
Acceptability	The safety evaluation by the NRC for the topical report EMF-2158(P)(A) approves the CASMO-4/ MICROBURN-B2 methodology for licensing applications

CASMO-4/MICROBURN-B2 Computer Code
Major Features

>
>
>
>
>
>
>
>
>
>

Neutronic Code Input Flow
CASMO-4/MICROBURN-B2

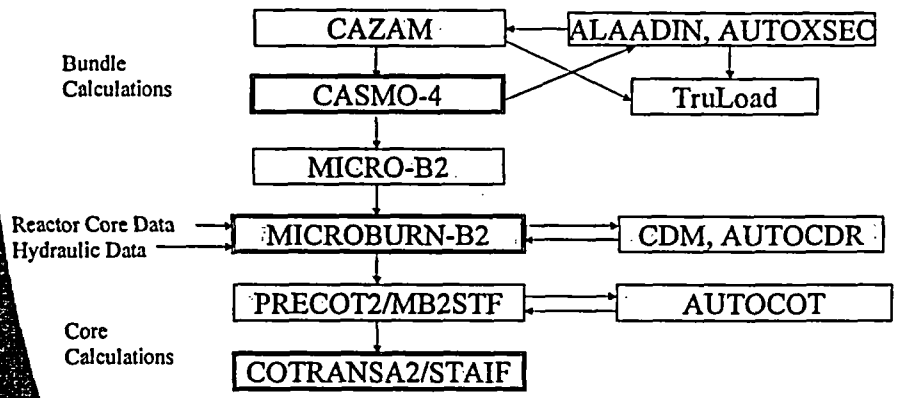

Neutronic Analysis Methodology
Cycle-Specific Analyses

- Cold shutdown margin
- Standby boron liquid control
- Control rod withdrawal error *
- Loss of feedwater heating
- Control rod drop accident
- Fuel assembly mislocation *
- Fuel assembly misorientation *
- Reactor core stability
- Core flow increase event ($LHGR_f$)
- Fuel storage criticality *
- Fuel handling accident *

* Cycle-specific confirmation that analysis remains bounding

Neutronic Analysis Methodology
Cycle-Specific Analyses

> Neutronic Input for $MCPR_f$, SLMCPR, LOCA

> Neutronic input for transient analyses

> POWERPLEX®-III CMSS input deck preparation

Transient Analysis Methodology

Transient Analysis Methodology
Major Computer Codes

Code	Use
RODEX2	Gap conductance for core and hot channel
XCOBRA	Hot channel active flow
COTRANSA2	System and core average transient response
XCOBRA-T	ΔCPR calculation
MICROBURN-B2	3D cross-sections at state point of interest
PRECOT2	1D cross-sections at state point of interest

Transient Analysis Methodology

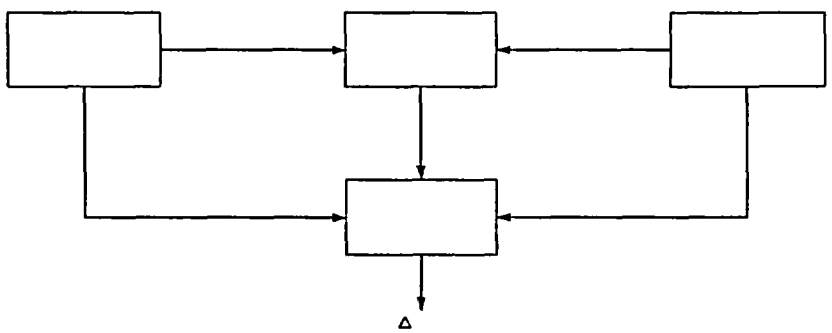

Thermal Limits Methodology

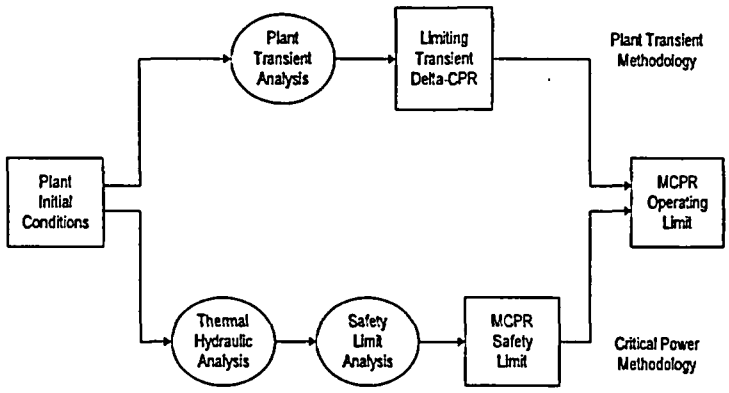

Transient Analysis Methodology

COTRANSA2 Computer Code

Description	COTRANSA2 is a BWR system transient analysis code with models representing the reactor core, reactor vessel, steam lines, recirculation loops, and control systems
Use	Evaluate key reactor system parameters such as power, flow, pressure, and temperature during core-wide BWR transient events Provide boundary conditions for hot channel analyses performed to calculate ΔCPR
Documentation	ANF-913(P)(A) Volume 1 Rev 1 and Supplements, *COTRANSA2: A Computer Program for Boiling Water Reactor Transient Analyses*, August 1990
Acceptability	The safety evaluation by the NRC for the topical report ANF-913(P)(A) approves COTRANSA2 for licensing applications

COTRANSA2 Computer Code

Major Features

> Nodal (volume-junction) code with 1-dimensional homogeneous flow for the reactor system

> 1-dimensional neutron kinetics model for the reactor core that captures the effects of axial power shifts during the transient

> Neutronics data obtained from MICROBURN-B2

> Core thermal-hydraulic model consistent with XCOBRA and XCOBRA-T

> Dynamic steam line model

Transient Analysis Methodology

Transient Analysis Methodology

XCOBRA-T Computer Code

Description	XCOBRA-T predicts the transient-thermal hydraulic performance of BWR cores during postulated system transients
Use	Evaluate the transient thermal-hydraulic response of individual fuel assemblies in the core during transient events Evaluate the ΔCPR for the limiting fuel assemblies in the core during system transients
Documentation	XN-NF-84-105(P)(A) Volume 1 and Supplements, *XCOBRA-T: A Computer Code for BWR Transient Thermal-Hydraulic Core Analysis,* February 1987
Acceptability	The safety evaluation by the NRC for the topical report XN-NF-84-105(P)(A) approves XCOBRA-T for licensing applications

XCOBRA-T Computer Code

Major Features

- A flow channel is used to represent the limiting assembly for each fuel type
- Hydraulic models are consistent with XCOBRA and COTRANSA2
- Transient fuel rod model with CHF prediction capability
- Non-limiting fuel assemblies are grouped into average flow channels
- Boundary conditions (core, power, axial power shape, inlet enthalpy, upper- and lower-plenum pressure) are applied to the core
- Iterates on hot channel power until CHF occurs at the limiting node at the limiting time during the transient
- ΔCPR is equal to the initial CPR minus 1.0

Transient Analysis Methodology

RODEX2 Computer Code

Description	Predicts the thermal and mechanical performance of BWR fuel rods as a function of power history
Use	Used to provide initial conditions for transient and accident analyses (hot channel and core average fuel rod gap conductance)
Documentation	XN-NF-81-58(P)(A) Rev 2 and Supplements, *RODEX2 Fuel Rod Thermal-Mechanical Response Evaluation Model*, March 1984
Acceptability	The safety evaluation by the NRC for XN-NF-81-58(P)(A) Rev 2 and Supplements approves RODEX2 for licensing applications

RODEX2 Computer Code

Major Models

> Fission gas release

> Fuel swelling, densification, and cracking

> Fuel to clad gap conductance

> Radial thermal conduction

> Free volume and internal gas pressure

> Fuel and cladding deformation

> Cladding corrosion

Transient Analysis Methodology

Calculation Process

Transient Analysis Methodology

Calculation Process

AREVA

Transient Analysis Methodology
Calculation Process (continued)

AREVA

Transient Analysis Methodology
Calculation Process (continued)

AREVA

Transient Analysis Methodology
Cycle-Specific Analyses

AREVA

Transient Analysis Methodology
Cycle-Specific Analyses

AREVA

Transient Analysis Methodology
Cycle-Specific Analyses

AREVA

LOCA Analysis Methodology

LOCA Analysis Methodology
Major Computer Codes

Code	Purpose
RODEX2	Fuel rod performance code used to predict the thermal-mechanical behavior of BWR fuel rods as a function of exposure
RELAX	BWR system analysis code used to calculate the reactor system and hot channel response during the blowdown, refill, and reflood phases of a LOCA
HUXY	Heat transfer code used to calculate the heatup of a BWR fuel assembly during all phases of a LOCA

LOCA Analysis Methodology
RODEX2 Computer Code

Description	Fuel rod performance code used to predict the thermal-mechanical behavior of BWR fuel rods as a function of exposure and power history
Use	Fuel rod stored energy Initial fuel rod thermal and mechanical properties
Documentation	XN-NF-81-58(P)(A) Rev 2 and Supplements, *RODEX2 Fuel Rod Thermal-Mechanical Response Evaluation Model*, March 1984
Acceptability	The safety evaluation by the NRC for XN-NF-81-58(P)(A) Rev 2 and Supplements approves RODEX2 for licensing applications

LOCA Analysis Methodology

RELAX Computer Code

Description	RELAX is a BWR systems analysis code used to calculate the reactor system and core hot channel response during a LOCA
Use	Evaluate the time required to reach the end of the blowdown phase and to reach core reflood during the refill/reflood phase of the LOCA analysis Evaluate hot channel fluid conditions during the blowdown phase of LOCA and time to reach hot channel reflood during the refill/reflood phase of the LOCA analysis
Documentation	EMF-2361(P)(A), *EXEM BWR-2000 ECCS Evaluation Model*, May 2001
Acceptability	The safety evaluation by the NRC for the topical report EMF-2361(P)(A) approves RELAX for licensing applications

RELAX Computer Code

Major Models

- Reactor system is nodalized into control volumes and junctions
- Mass and energy conservation equations are solved for control volumes
- Fluid momentum equation is solved at junctions to determine flow rates
- 1-dimensional, homogeneous equilibrium
- Three equation model with drift flux model
- Complies with Appendix K requirements for ECCS analysis
- Separate models for average core and hot assembly

RELAX System Model

RELAX Hot Channel Model

LOCA Analysis Methodology
HUXY Computer Code

Description	Heat transfer code used to calculate the heatup of the peak power plane in a BWR fuel assembly during the blowdown, refill, and reflood phases of a LOCA
Use	Evaluate the peak clad temperature and metal-water reaction in the fuel assembly resulting from a LOCA
Documentation	XN-CC-33(A) Rev 1, *HUXY: A Generalized Multirod Heatup Code With 10CFR50 Appendix K Heatup Option – User's Manual,* December 1975
Acceptability	The safety evaluation by the NRC for the topical report XN-CC-33(A) Rev 1 approves HUXY for licensing applications

HUXY Computer Code
Major Features

> Models an axial plane in a fuel assembly

> Models individual rods in plane of interest

> Models assembly local power distribution and rod-to-rod radiant heat transfer

> Uses RELAX hot channel boundary conditions during blowdown

> Uses spray heat transfer coefficients during refill (based on FANP ATRIUM-10 tests)

> Uses reflood heat transfer coefficients after hot node reflood

LOCA Analysis Methodology

LOCA Analysis Methodology
Cycle-Specific Analyses

> For each transition cycle, a complete plant-specific LOCA break spectrum analysis is performed
- Break location
- Break geometry (split, guillotine)
- Break size
- ECCS failure
- Axial power shape
- Initial core flow

> For each cycle, MAPLHGR limit analysis is performed
- Limiting break characteristics from break spectrum analysis
- Each lattice design in core
- Full exposure range

AREVA

LOCA Analysis Methodology
Break Spectrum Analyses

AREVA

LOCA Analysis Methodology
MAPLHGR Analyses

Safety Analysis Methodology
Analysis Conservatism

Approach for current NRC-approved methods

> Current methods are not best estimate

> Current methods provide conservative, bounding analysis results

> Current safety analyses have adequate conservatism to offset methodology uncertainties

> Conservatism is incorporated in safety analyses in two ways
- Computer code models produce conservative results on an integral basis
- Important input parameters are conservatively bounding

> All conservatisms are additive and not statistically combined
- Individual phenomena are not treated statistically

Safety Analysis Methodology
Examples of Analysis Conservatism for Limiting Events

Pressurization Events

> COTRANSA2 conservative prediction of Peach Bottom turbine trip tests
- Peak power >10% conservative

>
-
-
-

> Steady-state CPR correlation demonstrated to be conservative for transients (predicted dryout time occurs earlier than test data)

Safety Analysis Methodology
Examples of Analysis Conservatism for Limiting Events

Pressurization Events *(continued)*

> Bounding scram insertion times (delay and insertion rate)

> All control blades assumed to insert at the same time and rate
- Control blades actually insert at a distribution of speeds
- Control blades faster than average provide more negative reactivity than is lost by control blades slower than average

> All control rods assumed to be initially fully withdrawn (conservative for off-rated conditions and pre-EOC exposures)

> Conservative licensing basis step-through used for neutronics input
- More top-peaked axial power shape than design basis
- Longer cycle exposure than design basis

Safety Analysis Methodology
Examples of Analysis Conservatism for Limiting Events

Pressurization Events *(continued)*

> Bounding setpoints (analytical limits) and delays used
- Reactor protection system
- Turbine protection system

> Bounding equipment performance assumed
- Turbine control and stop valve closure times
- RPT delay time
- Turbine bypass
- Safety and relief valves

> The four steam lines are represented as a single, average steam line
- Accounting for differences causes the pressurization rate to be reduced

Safety Analysis Methodology
Examples of Analysis Conservatism for Limiting Events

Control Rod Withdrawal Error

> Reactor is at rated power, peak core reactivity, xenon-free

> Error rod is initially fully inserted

> Normal control rod pattern adjusted to put fuel located near the error rod on or near (within 3%) the CPR limit

- Leads to very conservative results (gives highest ΔCPRs and lowest MCPRs)
- Limiting CPR bundles tend not to be near full-in control rods
- Artificially forcing power toward the error rod before pulling it leads to the worse results

> The operator ignores LPRM and RBM alarms during the rod withdrawal event

> The worst credible RBM channel and LPRM failures (or out-of-service) combination surrounding the error rod location are assumed which minimizes RBM response

Safety Analysis Methodology
Summary

> FANP has a rigorous, systematic process for identifying the safety analyses required for each cycle to ensure that all design and licensing criteria are satisfied

> FANP has developed and obtained NRC approval of analytical methods necessary to perform the required safety analyses for each reload core

> FANP performs extensive cycle-specific analyses for each reload core

- Plant-specific parameters and models
- Cycle-specific core and fuel neutronic designs
- Allowed operating conditions (power/flow map, exposure, EOOS options)

AREVA

AREVA

EPU and Non-EPU Analysis Conditions

Douglas W. Pruitt
Manager, Methods Development
Douglas.Pruitt@framatome-anp.com
(509) 375-8382

Rockville, MD
June 7 & 8, 2005

AREVA

Reload Licensing Methodology

> Reload licensing analysis are performed to ensure that all fuel design and operating limits are satisfied for the limiting assembly in the core

> Applicability of design methodology was determined by reviewing the explicit SER restrictions on the BWR methodology

- No SER restrictions on power level for the Framatome ANP topical reports
- No SER restrictions on the parameters most impacted by the increased power level
  - Core average void fraction
  - Steam/Feed-water flow
  - Jet Pump M Ratio

> The impact of EPU on core and reactor conditions was evaluated to determine any challenges to the theoretical validity of the models

AREVA

Power Uprate Considerations

> Thermal operating limits (MCPR, MAPLHGR, LHGR) are fairly insensitive to power uprate

> The ranges of key physical phenomena (e.g., heat flux, fluid quality, assembly flow) in limiting assemblies during normal operation or transient events are not significantly different for uprated and non-uprated conditions

> Fuel specific determination of critical power is the most limiting methodology for non-uprated and uprated BWR operation

> FANP analysis methodologies impose critical power correlation limits so the fundamental range of assembly conditions must remain within the same parameter space under uprate conditions

AREVA

Power Uprate Observations

> Maintaining the same critical power limits with increased core power requires flattening of the normalized radial power distributions
  - Leads to a more uniform core flow distribution and slightly higher flow rates in the hottest assemblies
> More assemblies and fuel rods are near thermal limits and may result in a higher safety limit MCPR
> Higher steam flow rate and associated feedwater flow rate
> Core average void fraction will increase
> Higher core average power will lead to an increased core pressure drop and a slight decrease in jet pump performance

AREVA

Power Uprate Considerations

> Changes to the hot assemblies
  - Power will be approximately the same
  - Flow will slightly increase
> Changes to the average assemblies
  - Power will increase
  - Flow will slightly decrease

Conclusion:

> The current parametric envelope will continue to encompass the conditions for all assemblies in an uprated reactor.
> Therefore, the methods used to assess assembly thermal-hydraulics are applicable to power uprate

Thermal Hydraulic Core Analyses Testing Based

> FANP tests to confirm or establish the applicability of methods
- PHTF test measurements provide assembly flow and pressure drop characteristics (e.g., pressure loss coefficients)
- Karlstein test facility provides both the assembly two-phase pressure drop and CHF performance characteristics
- FCTF tests confirm the conservatism of the Appendix K spray heat transfer coefficients

> Supplemental testing at Karlstein extends the validation and applicability of our methods
- Hydraulic stability
- Oscillatory dryout and rewet
- Void fractions

Karlstein Thermal Hydraulic (KATHY) Test Loop

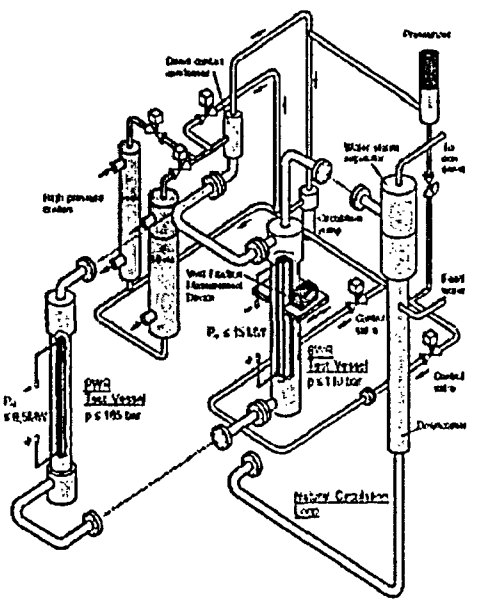

Critical Power Constraints

> SPCB fuel-specific CHF correlation based on KATHY test data

> Approved range of applicability for the SPCB correlation is enforced in codes (inlet subcooling, flow, pressure, boiling transition enthalpy) - uprate does not change this

- In some calculations, state conditions outside the limits are handled by NRC approved conservative assumptions

> LOCA calculations fall outside the SPCB parametric envelope during the accident simulation. In this case, the local conditions formulation of the modified Barnett correlation is used.

SPCB Out-of-Bounds Conditions

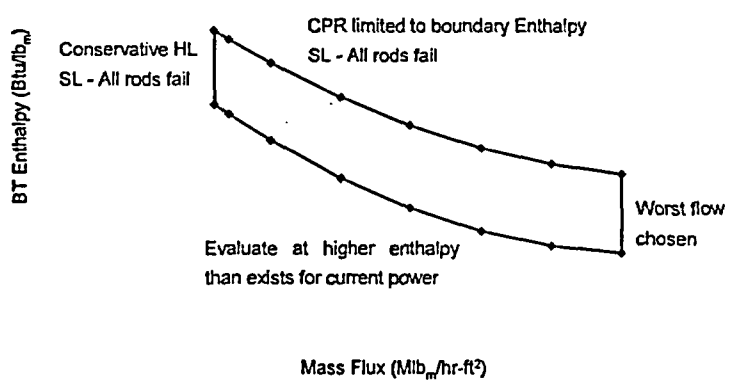

AREVA

Critical Power Constraints

> Since the CHF performance is characterized and imposed on a fuel design specific basis the assembly operating conditions must remain within the approved application range

> This fundamental restriction results in minimal differences between the bench-marked core conditions and those calculated for power uprate conditions.

> This similarity is confirmed by comparing the assembly exit conditions

- KATHY pressure drop measurements
- CASMO4/MICROBURN-B2 approved benchmark conditions (EMF-2158 (P)(A)
- Cycle depletion conditions for a BWR 120% power uprate / MELLLA+ core design.

AREVA

Pressure Drop Tests vs Reactor Benchmark and Design Conditions

CASMO-4/MICROBURN-B2 Operating Experience

Reactor	Reactor Size, #FA	Power, MWt (%Uprated)	Ave. Bundle Power, MWt/FA	Peak Bundle Power, MWt/FA	Cycles Calc. w/ MB2	Fuel/ Cycle Licensing*	Comments
GER-1	592	2575 (0.0)	4.4	7.2	8	X	
GER-2	592	2575 (0.0)	4.4	7.4	13	X	
GER-3	532	2292 (0.0)	4.3	7.3	11	(X)	
GER-4	840	3690 (0.0)	4.4	7.5	17	X	
FIN-1	500	2500 (15.7)	5.0	8.0	11	X	3 cycles oper.
SWE-1	444	1800 (5.9)	4.1	7.3	11	X	
SWE-2	676	2928 (8.0)	4.3	7.4	8	(X)	
SWE-3/4	700	3300 (9.3)	4.7	8.0	8/3	(X)/(X)	
GER-5, 6	784	3840 (0.0)	4.9	8.1	24	(X)	
SP-1	624	3237 (11.9)	5.2	7.8	3	(X)	
SWZ-1	648	3600 (14.7)	5.6	8.6	9	(X)	1 cycle oper.
SWE-5	648	2500 (10.1)	3.9	6.9	10	(X)	
US-1	624	3091 (6.7)	5.0	7.7	6	X	
US-2	800	3898 (1.7)	4.9	7.7	6	X	
US-3	764	3489 (5.0)	4.6	7.2	3	X	
				Total	>150		
Browns Ferry 2/3	764	3952 (20.0)	5.2	7.3		none	Equilibrium cycle study

* (x)=currently fuel licensing only (Europe).

Conclusions Thermal Hydraulic Core Analysis

> Power uprate introduces changes in core design and steam flow rate

> Assemblies are subject to the same LHGR, MAPLHGR, MCPR and cold shutdown margin limits

> These LCOs restrict the assembly powers, flows and void fractions typically within the ranges observed in current plant operation, the neutronics benchmarking database and the FANP testing experience.

> Therefore,

- Hydraulic models and constitutive relationships used to compute the core flow distribution and local void content remain applicable
- Neutronic methods used to compute the nodal reactivity and power distributions remain applicable

Power Uprate Impact on Transient Analysis

> Phenomena of interest for BWR AOO transient analysis
- Void fraction/quality relationships
- Determination of CHF
- Pressure drop
- Reactivity feedbacks
- Heat transfer characteristics

> The dominant phenomena of interest are related to the local assembly conditions, not the total core power

> FANP transient CHF measurements in KATHY are used to qualify the transient hydraulic solution
- Benchmarks capture the transient integration of the conservation equations and constitutive relations (including the void-quality closure relation) and determination of CHF with SPCB

> FANP benchmarks illustrate conservative predictions of time of dryout

Transient Qualification

Power Uprate Impact on Transient Analysis

> Outside the core, the system simulation relies on solutions of the basic conservation equations and equations of state
- Feedwater flow and Jet Pump M-ratio changes
- Steam flow rate and steamline dynamics for pressurization events
  - Impact of steam-flow rate dependent on valve characteristics for pressurization events
- Solution of conservation equations have no limitations within the range of variation associated with power uprate

> Reactivity feedbacks are validated in a variety of ways
- Fuel lattice benchmarks to Monte Carlo results (SER restriction)
- Steady-state monitoring of reactor operation (power distributions and eigenvalue)
- Benchmark of coupled system to the Peach Bottom 2 turbine trip transients that exhibit a minimum of 5% conservatism

> Transient analysis remain valid for power uprate

Power Uprate Impact on LOCA

> Local hot assembly parameters (PCT & % M/W reaction) are determined primarily from the hot assembly initial stored energy, hot assembly transient decay heating and primary system liquid inventories
- Hot assembly initial stored energy, decay heating, and fluid inventory are not expected to change significantly (same LHGR and MCPR limits)
- System inventory differences due to the increased core power have a transient feedback on the hot channel flow and fluid conditions.
  - Transient inventory differences due to power uprate are encompassed by the variation required to assess the entire break spectrum
  - Code capabilities are not challenged by the differences

> Local hot assembly PCT and % M/W reaction exhibit only small changes due to power uprate

> Core-wide parameters (Core-wide M/W reaction and demands on long term cooling) increase due to power uprate

> Current LOCA methodology covers all phenomena for uprated conditions

AREVA

Power Uprate Impact on Stability

> The flatter radial power profile induced by the power uprate will have a small impact on stability for same operating state point
- The flatter radial power profile may increase the core decay ratios
  - Potential reduction in the eigenvalue separation
  - More assemblies operating at higher P/F ratios

> The STAIF code computes the stability characteristics of the core
- Frequency domain solution of the applicable conservation and closure relationships
- Computes the regional mode directly using the actual state-point eigenvalue separation
- Benchmarked against full assembly tests, as well as global and regional reactor data as late as 1998

> The impact of the "flatter" core design on stability limits will be directly computed based on the projected operating conditions

AREVA

Power Uprate Impact on Special Events

> FANP performs ASME over-pressurization analysis to demonstrate compliance with the peak pressure criteria
- System response and sensitivities are essentially the same as AOO pressurization events

> FANP performs ATWS analysis to demonstrate compliance with the peak pressurization criteria which occurs early in the event
- Early system response and sensitivities are essentially the same as the transient simulations presented earlier

> Appendix R analysis is performed using the approved LOCA analysis codes.
- Like LOCA, the impact of power uprate is primarily through the increase in decay heat in the core.
- Decay heat is conservatively modeled using industry standards applied as specified by regulatory requirements.
- Use of Appendix K heat transfer correlations and logic is conservative for Appendix R calculations

AREVA

EPU Impact

> EPU operation does not challenge the applicability of the methods used to compute and monitor against licensing limits

> EPU operation is expected to impact the following areas:

- Safety Limit
- Transient response due to different balance between core voids, feedwater/steam flow rates and steamline valve characteristics
- LOCA core-wide metal water reaction
- LOCA long term cooling
- Backup stability protection – exclusion regions

AREVA

Power Uprate Applicability Summary

> Maintaining margin to fuel design safety limits imposes restrictions on the range of operating conditions an assembly may experience during steady-state and transient conditions

> Increasing the core thermal power is accommodated by radial power flattening so that limiting assembly conditions deviate only slightly from current operating experience values

> The FANP approved licensing methods directly assess the impacts of power uprate on operating limits without modification.

> The FANP approved licensing methods remain valid for power uprate conditions

AREVA

AREVA

EPU Conditions
Non-EPU Conditions
Validation of MB2 for EPU
Reactivity-Void Coefficients

Ralph Grummer
Manager, Core Physics Methods
Ralph.Grummer@framatome-anp.com
(509) 375-8427

Rockville, MD
June 7 & 8, 2005

AREVA

BWR Methodology Applicability

> Objective
- Describe the validation process used by Framatome-ANP
- Demonstrate that the Framatome-ANP Methodology is Applicable to EPU conditions at Browns Ferry
- Demonstrate that data provided in the Neutronic Methodology Topical report bounds the expected conditions of EPU operation at Browns Ferry
- Answer the questions provided by the NRC

AREVA

> Item 3 Validation of Steady State Neutronic Methods for EPU conditions
- 3-5 Provide presentation slides that tabulate the key parameters being validated (nodal power, pin power etc.), the type of benchmarking/validation that was performed and the bundle conditions corresponding to the validation. Specifically, state if Framatome's neutronic method was validated by gamma scan and core follow benchmarking based upon the current fuel designs operated under the current operating strategies and core conditions.

EMF-2158(P)(A) Validation Basis

- EMF-2158(P)(A) defined a set of criteria to demonstrate the acceptability of the Neutronic design code system
- Code system results were compared against critical experiments, higher order methods and actual commercial operating experience
- The SER states that the code system shall be applied in a manner such that results are within the range of the validation criteria (Tables 2.1, 2.2 and 2.3)

Fuel Lattice Criteria Table 2.1

AREVA

Fuel Lattice Criteria Table 2.1 (Cont.)

AREVA

Fuel Lattice Criteria Table 2.1 (Cont.)

AREVA

Core Simulator Validation Table 2.2

Data based upon unbiased results

AREVA

Core Simulator Validation Table 2.2 (Cont.)

AREVA

Core Simulator Validation Table 2.2 (Cont.)

> TIP data taken from operating commercial power plants

> Gamma scan data taken from Quad Cities measurements on 8x8 assemblies

> Gamma scan data taken from KWU-S measurements on ATRIUM-10 assemblies

Includes current fuel designs and operating strategies

AREVA

Measured Power Distribution Uncertainty Table 2.3

AREVA

> Item 3 Validation of Steady State Neutronic Methods for EPU conditions

- 3-2 Evaluate the validation data presented in EMF-2158(P)(A) and provide the ranges of void fractions the validation was based on.

AREVA

Topical Report Thermal Hydraulic Conditions

Maximum assembly powers approaching 8 MW are in the benchmark database

AREVA

Topical Report Thermal Hydraulic Conditions

Maximum exit voids of 90% are in the benchmark database

AREVA

Continuous Validation Process

- > FANP work practice P104,129 requires evaluation for a significant fuel design change
- > CASMO-4 and MCNP calculations are performed
- > Fission rate distribution statistics are compared to Table 2.1

ATRIUM-10 Lattice Validation

Fission Rate Criteria Met

Continuous Validation Process

- For a new reactor, benchmark calculations are performed
- Hot operating eigenvalue statistics are compared to Table 2.2
- Cold startup eigenvalue statistics are compared to Table 2.2
- TIP statistics are compared to Table 2.2
- Local peaking comparisons are determined from the lattice calculations

AREVA

Reactor Validation Results

Eigenvalue criteria are met

AREVA

Reactor Validation Results

> Measured power distribution uncertainties are a convolution of calculation and measurement uncertainties

- $\delta P^2 = \delta B^2 + \frac{\delta D^2 + \delta T^2}{NIJ}$
- δB is calculated power uncertainty
- δD is synthesized TIP uncertainty
- δT is calculated TIP uncertainty
- NIJ is the number of TIP's

AREVA

Reactor Validation Results

TIP comparisons include calculation and measurement uncertainties

AREVA

Reactor Validation Results

TIP measurement uncertainties are determined by comparison of symmetric TIP measurements

AREVA

Reactor Validation Results

> Measured and calculated TIP comparisons meet the requirements

> Measured symmetric TIP comparisons meet the requirements

> Together these indicate that the measured power uncertainty requirements are met

AREVA

Comparison of EPU and Non-EPU Thermal Hydraulic Conditions

> Item 1 Provide Predicted EPU High Powered Bundles Thermal Hydraulic Conditions

- 1-1 For the Predicted EPU conditions, provide comparisons of the limiting hot assembly operating conditions with exposure based on a specific EPU core and fuel design (e.g. ATRIUM-10 and BLEU)

> Item 2 Provide Non-EPU High Powered Bundles Thermal Hydraulic Conditions

- 2-1 Compare the EPU high powered assembly performance against the current experience base.

AREVA

Evaluation of Power Uprate for Browns Ferry

> The core power or average assembly power is being increased by ~15% to 120% of original licensed power
> The MCPR operating limit is expected to be nearly the same
> The maximum assembly power is limited by the MCPR operating limit
> Since the core flow is unchanged, the maximum assembly power remains essentially the same.

AREVA

Evaluation of Power Uprate for Browns Ferry

Max assembly powers are less than those presented in the topical report

Evaluation of Power Uprate for Browns Ferry

Max exit voids are less than those presented in the topical report

Thermal Hydraulic Conditions

> The range of thermal hydraulic conditions present in the topical report database envelopes EPU operation

> Critical parameters examined

- Maximum Assembly Power
- Maximum Exit Void Fraction

AREVA

Reactivity Coefficients – Void Coefficient

> Item 4 Reactivity Coefficients – Void Coefficient

- 4-2 Evaluate the Framatome-ANP methods and establish if the uncertainties and biases used in you reactivity coefficients (e.g. void coefficient) are applicable or remain valid for the neutronic and thermal-hydraulic conditions expected for EPU operation.

AREVA

Additional Validation

> In order to evaluate the accuracy of the void coefficient, MCNP runs have been made

> These results indicate that CASMO performs an accurate assessment of the void effect

CASMO-4 vs. MCNP Results

Casmo-4 void coefficient is nearly identical to MCNP

Void Coefficient Verification

- A measure of the quality of the simulator calculation is the variation of the critical eigenvalue.
- Observations of this behavior relative to core average void fraction indicate that there is no systematic bias.
- Cycle exposure trends are accounted for by the use of target eigenvalue curves.

Void Coefficient Verification from Topical Report

There is no trend in core eigenvalue relative to void fraction

Void Coefficient Verification

> The void coefficient is calculated accurately for a wide variety of core average void fractions

> The methodology retains the same accuracy for the conditions represented by EPU.

AREVA

Additional Validation

> Item 3 Validation of Steady State Neutronic Methods for EPU conditions

- 3-3 Provide data that demonstrates the current uncertainties and biases established in the benchmarkings and presented in table 9.8 and 9.9 of EMF-2158 (P)(A) remain valid for the neutronic and thermal hydraulic conditions predicted for the EPU operation.

AREVA

Additional Validation

> TIP measurements taken at reactors that have operated in extended power uprate conditions indicate that the calculation accuracy is not impacted.

AREVA

Additional Validation

Power uprate experience shows that uncertainties are unchanged

AREVA

Conclusion

> The neutronic methodology utilizing CASMO-4 and MICROBURN-B2 accurately models reactor cores with a wide range of operating conditions including those anticipated for EPU at Browns Ferry

> The uncertainties presented in EMF-2158(P)(A) continue to be applicable for EPU operation at Browns Ferry

AREVA

AREVA

Void Quality Correlation

Thomas H. Keheley
Senior Expert, Thermal Hydraulics
Methods Development
Thomas.Keheley@framatome-anp.com
(509) 375-8702

Rockville, MD
June 7 & 8, 2005

Void-Quality Correlation

>

-
-
-
-

Void-Quality Correlation

>

-
-

Void-Quality Correlation

>

>

XCOBRA Benchmarks to FRIGG Tests

XCOBRA Benchmarks to FRIGG Tests

MB2 Benchmarks to FRIGG Tests

MB2 Benchmarks to FRIGG Tests

XCOBRA Benchmarks to ATRIUM-10

XCOBRA Benchmarks to ATRIUM-10

MB2 Benchmarks to ATRIUM-10

Void-Quality Correlation

>

-
-
-
-

Void-Quality Correlation

>

-
-
-
-
-

Karlstein Void Measurement Current System

>

>

>

Karlstein Void Measurement Current System

Karlstein Void Measurement

Karlstein Void Measurement

Karlstein Void Measurement

Karlstein Void Measurement

AREVA

AREVA

CHF/CPR Correlation

Thomas H. Keheley
Senior Expert, Thermal Hydraulics
Methods Development
Thomas.Keheley@framatome-anp.com
(509) 375-8702

Rockville, MD
June 7 & 8, 2005

Correlation Form

> SPCB is a critical heat flux correlation of the form

$$q_{Base}'' = \frac{A - B(h_{bl} + C)}{1 - \frac{B}{G}}$$

$$F = \frac{\Omega}{q_{lc}''(1 - e^{-\Omega lc})} \int_0^{lc} \left[e^{-\Omega(lc - z)} \right] q''(Z)dz$$

$$q_{NU}'' = \frac{q_{base}''}{F}$$

Correlation Form

Where,

$$A = f(G, P)$$
$$B = f(G, P)$$
$$C = f(G, P, h)$$
$$\Omega = f(G, dq'')$$

AREVA

Correlation Database

> The database for the SPCB correlation is

> The axial power shapes of the tests were 1.4 peak to average cosine and 1.6 peak to average upskew and downskew

AREVA

Correlation Database

> Of the

> Transient tests were also performed in both cosine and upskew axial power profiles for correlation validation

AREVA

Correlation Statistics

> The correlation mean for the ATRIUM-9 is

> The correlation mean for the ATRIUM-10 is

AREVA

SPCB Measured vs Predicted Critical Power

AREVA

Correlation Range of Applicability

Because dryout tests are performed using electrically heated assemblies and control flow, pressure, inlet subcooling and power, the correlation range of applicability is set by the test conditions.

Pressure (psia)	571.4 to 1432.2
Inlet Mass Velocity (Mlb/hr*ft^2)	0.87 to 1.50
Inlet subcooling (Btu/lbm)	5.55 to 148.67
Design Local Peaking	1.5

In addition, an uncertainty has been determined for local peaking factors greater than the design local peaking.

AREVA

Correlation Enthalpy Bounds

AREVA

Correlation Enthalpy Bounds

> Note that the enthalpy at the plane of boiling transition is affected by the axial power profile

> Therefore, the enthalpy bounds checking is in fact an axial power profile bound

AREVA

Correlation Bounds Checking

> All codes that use the SPCB correlation use bounds checking to assure the range of applicability in the code

> The SPCB topical report (EMF-2209(P)(A)) details the required actions if any bounds are violated (Section 2.6)

AREVA

AREVA

Two-Phase Loss Coefficients

Thomas H. Keheley
Senior Expert, Thermal Hydraulics
Methods Development
Thomas.Keheley@framatome-anp.com
(509) 375-8702

Rockville, MD
June 7 & 8, 2005

AREVA

BWR Pressure Drop Methodology

> The BWR pressure drop methodology (XN-NF-79-59(P)(A)) was developed with data acquired during critical heat flux testing at Columbia University.

> A total of 419 data points were predicted for five test assemblies with two different spacer designs and three axial power profiles.

AREVA

BWR Pressure Drop Methodology

> The pressure drop calculation is based on one dimensional momentum equation for separated flow.

> The solution of the momentum equation requires determination of the void fraction and two phase friction multiplier.

AREVA

BWR Pressure Drop

> Single phase and two phase pressure drop testing is included as part of the dryout test program for new fuel assembly designs

> This data is then used to assess the reasonableness of the pressure drop methodology

AREVA

BWR Two Phase Pressure Drop Testing

AREVA

Predicted vs Measured DP Data
ATRIUM-10 Upper Spacer

AREVA

Predicted vs Measured DP Data
ATRIUM-10 Lower Spacer

AREVA

AREVA

Bypass Void Modeling

Ralph Grummer
Manager, Core Physics Methods
Ralph.Grummer@framatome-anp.com
(509) 375-6427
Rockville, MD
June 7 & 8, 2005

AREVA

Bypass Flow

> Total bypass flow is defined by the OEM to assure robust operation of TIPs, LPRMs and control blades

> The total bypass flow specified by the OEM is preserved for FANP fuel and core designs

> Bypass flow voiding affects the core flow distribution and axial power distribution

- Flow distribution effects are explicitly modeled in FANP analyses
- Reactivity effects are explicitly modeled for stability analysis
- Reactivity effects are negligible or conservative for other analyses

AREVA

Bypass Modeling

> FANP design codes implement appropriate bypass modeling capabilities

- Bypass is modeled as a single TH channel with direct energy deposition
- Sub-cooled boiling is not considered due to the low surface heat fluxes in the bypass region
- Flow based on inlet pressure loss coefficients and density head in the bypass region with core pressure drop boundary condition

AREVA

Sample Calculations

For most cases on the Power/Flow map boiling does not occur

AREVA

Code Capabilities

> Neutronics Core Simulator
- Direct energy deposition is dependent on:
  - Exposure
  - Void fraction
  - Control state
  - Fuel type

> Steady-state, transient and LOCA analysis
- Core average direct energy deposition based on the neutronics core simulator

> Stability
- Reactivity feedback based on equal importance of in-channel and bypass voids

> Safety Limit
- No bypass modeling, channel flow rates based on hydraulic demand curves from steady-state code

AREVA

Bypass Voiding Capabilities

> Bypass voiding is of concern only at off rated conditions typically associated with stability analysis

> A first order correction for bypass reactivity effects is included

- Reactivity feedback based on equal importance of in-channel and bypass voids

> Uncertainty in bypass voiding and reactivity feedback are included in the decay ratio uncertainties in STAIF

- Predicted bypass voiding for internal pump plants bounds that predicted for EPU/MELLLA+ operation

AREVA

Bypass Void Design Criteria

> The bypass voiding criteria is implicitly addressed by preserving the same bypass flow rate as the NSSS vendor

- Explicitly modeled NSSS vendor fuel and core to determine core support plate pressure coefficients
- FANP lower tie plate flow holes sized to preserve total bypass flow

> Bypass flow rates confirmed to be consistent with the NSSS vendor's fuel design for EPU conditions

AREVA

Bypass Voiding and EPU conditions

> Bypass voiding is directly computed by the core simulator
  - Determines core flow distributions
> Bypass voiding is expected to occur at some off-rated conditions for both non-EPU and EPU conditions
  - The degree of bypass voiding is approximately the same since the off-rated core power/flow conditions are identical
> Primary impact is stability calculations
  - Bypass boiling and reactivity feedbacks are modeled

AREVA

Conclusion

> EPU conditions do not present a significant challenge to bypass modeling
> Bypass voiding is modeled and included in the uncertainties of the methodology

AREVA

Safety Limit MCPR Methodology

Michael E. Garrett
Manager, BWR Safety Analysis
michael.garrett@framatome-anp.com
(509) 375-8294

Rockville, MD
June 7 & 8, 2005

AREVA

SLMCPR Methodology

> FANP calculates the safety limit MCPR (SLMCPR) on a cycle-specific basis
- Protects all allowed reactor operating conditions
- Actual reload fuel designs
- Actual core loading
- Power distributions obtained from the MICROBURN-B2 cycle-specific design basis step-through analysis (referred to as cycle step-through in following response)
  - Best projection of cycle operation
  - Reflects design energy and operating strategy based on utility input
  - Includes expected range of core flow and control rod patterns

SLMCPR Methodology

> Design basis power distribution

- The initial MCPR distribution of the core is major factor affecting how many rods are predicted to be in boiling transition

SLMCPR Methodology

> Conservative design basis power distribution

- The design basis step-through is required to have margin to the operating limit MCPR (OLMCPR), typically 6%-10%
- Flatter (less peaked) radial power distributions are conservative for the SLMCPR analysis

SLMCPR Methodology
Item 9-1

> Core flow considered in SLMCPR analysis
- Sensitivity studies show that SLMCPR is not very sensitive to core flow (when other parameters are held constant)
- Minimum flow at rated power is often limiting (dependent on many core and fuel design parameters)
- FANP methodology specifies that worse case conditions (including core flow) that put the maximum number of rods closest to the SLMCPR are considered (ANF-524(P)(A) Rev 2 SER Section 3.3 and Response 7)

SLMCPR Methodology
Item 9-1 (continued)

> Exposure considered in SLMCPR analysis
- Exposure is not a direct input to the SLMCPR analysis; the primary impact of exposure is on the power distribution used in the SLMCPR analysis

AREVA

SLMCPR Methodology
Item 9-2

> Control rod patterns considered in SLMCPR analysis

- Rod patterns are not a direct input to the SLMCPR analysis; the primary impact of rod patterns is on the power distribution used in the SLMCPR analysis

AREVA

SLMCPR Methodology
Item 9-3

> SLMCPR applicability for ARTS/MELLLA

- The primary impact of ARTS/MELLLA operation on the SLMCPR analysis is the lower minimum allowed core flow at rated power

AREVA

AREVA

Stability Methods

Douglas W. Pruitt
Manager, Methods Development
Douglas.Pruitt@framatome-anp.com
(509) 375-8382

Rockville, MD
June 7 & 8, 2005

AREVA

Background

> Two categories of stability protection systems
- Region Exclusion
  - Scram initiated upon entering pre-defined potentially unstable region on the power/flow map
  - Administrative controls on buffer regions
- Detect and Suppress Option III installed at Browns Ferry Units
  - OPRM signals analyzed to detect oscillations and initiate scram prior to violation of the SLMCPR
  - SLMCPR protection based on relative CPR response versus Oscillation Magnitude (DIVOM curve)

> Analytical methodologies address both exclusion region determination and DIVOM assessments

AREVA

Region Exclusion Capabilities

AREVA

Region Exclusion for Option III

> Exclusion Region calculations provide back-up stability protection when the OPRM system is inoperable
  - Provides protection against oscillations by restricting operation to regions of the power/flow map that are expected to be stable
> Region boundaries are imposed administratively
> The boundary calculations are performed with the STAIF frequency domain computer code
  - Computes the channel, global and regional decay ratios for the state-point being analyzed
  - Does not rely on a correlation between channel and global decay ratios to protect the regional mode
  - Therefore the impact of core loading and control rod patterns on the regional mode are directly computed.

AREVA

STAIF Validation

> STAIF is used to define exclusion regions on the reactor power/flow map.
  - Exclusion regions are defined based on computed Decay Ratios
  - Primary emphasis for benchmarking is decay ratios
    - Hydraulic decay ratio measurements
      - Assure that the theoretical models and solution schemes are robust with respect to operating conditions and fuel assembly geometrical conditions
    - Reactor decay ratio measurements and instability events
      - Assure that the theoretical models and solution schemes are robust over a range of mixed core conditions, operating conditions, fuel types and oscillation modes

STAIF Benchmarking Summary

>
-
-

>
-
-

> The MB2/STAIF stability methodology was submitted to the NRC in November 1999

> NRC approved in August 2000

NRC Range of Applicability

> The NRC staff concluded "that the STAIF methodology is acceptable for best-estimate decay ratio calculations."
- "This conclusion applies to the three types of instabilities relevant to BWR operation, which are quantified by the hot-channel, core-wide and out-of-phase decay ratios"

> The "data base now covers in depth all the expected operating range of applicability"

> "For decay ratio range of 0.0 to 1.1 the decay ratios are accurate within +/- 0.20 for the hot-channel decay ratio, +/- 0.15 for the core-wide decay ratio, and +/-0.20 for the out-of-phase decay ratio"

AREVA

NRC Range of Applicability

> STAIF is benchmarked for BWR jet pump and internal pump BWRS for decay ratios between 0.0 and 1.1

> Since the STAIF qualification is limited to relatively normal conditions of operating reactors some conditions are excluded

- Extremely abnormal conditions such as LOCA or very-low-water-level conditions that may result during ATWS conditions
- New passive reactors such as SBWR where components like the extended upper plenum riser may affect the reactor stability

AREVA

Option III DIVOM Capabilities

Option III Setpoints

> Three part methodology per NEDO-32465(A)

> Hot Channel Oscillation Magnitude
- Statistical Calculation
- Function of amplitude setpoint (Sp)
- 95/95 upper bound

> DIVOM = fractional change in CPR as a function of Hot Channel Oscillation magnitude

> Initial MCPR (IMCPR)
- 3-D Steady State core simulator (MICROBURN-B2)
- Simulates flow run back to natural circulation
- Establishes MCPR prior to oscillation

Flow Chart for Setpoint Calculation

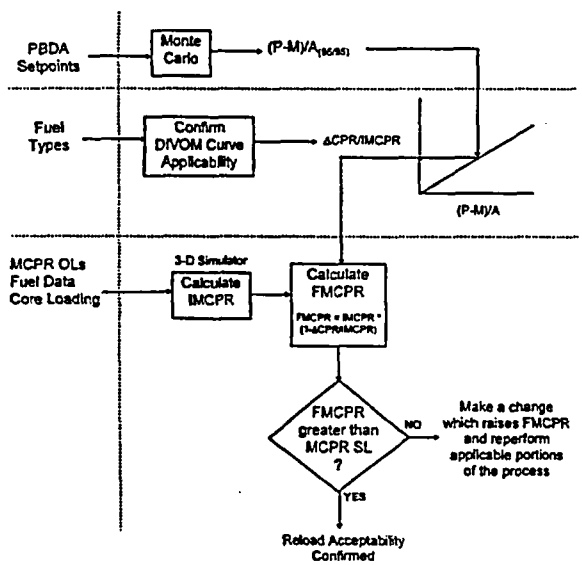

Issues with Option III

> 2001 Part 21 Report: Generic DIVOM curve nonconservative

> Increased the probability of Spurious Scram

- PBDA is sensitive to noise level which is high at reduced flow
- High DIVOM slope requires low magnitude setpoint, S_P
- Low S_P requires low confirmation counts, N_P
- Low setpoints may result in false oscillation identification or spurious scrams
- Example: Peach Bottom Unit 3 (Feb. 11, 2005)
  - Trip signal received, but OPRM system not yet activated
  - No other indication of oscillations
  - Attributed to overly conservative OPRM setpoints, and increased noise due to SLO Operation

Resolving Option III Issues

> Current Solutions:

- Figure Of Merit (FOM) DIVOM slope multiplier by GE
  - FOM Correlated with hot channel Power/Flow ratio
  - Produces high DIVOM slope and low S_P setpoint
- Cycle-Specific DIVOM calculation
  - Calculation scope limited to current cycle conditions
  - Elevated DIVOM slopes less likely for current cycle designs
  - DIVOM no longer generic

MICROBURN-B2/RAMONA5-FA Support for DIVOM Calculations

> Based on RAMONA5-2.4 (Studsvik-Scandpower)

> Many users worldwide:

- Framatome (FG) uses a RAMONA3 derivative
- Westinghouse
- Paul Scherrer Institut (Switzerland)
- Many utilities in Europe: TVO, Vattenfall, Phillipsgurg, Leibstadt etc.
- USNRC (RAMONA-4B at Brookhaven National Lab)

> USE Version Qualified to Framatome ANP Standards

Transient System Code

> Goal: Perform Well-Defined Numerical Analyses to Provide Data for DIVOM Relationship

> RAMONA5-2.4 → RAMONA5-FA

- Modal Kinetics
- Updated Closing Relations & Correlations
  - Applicable MB2 Steady-State Thermal-Hydraulic Set
  - STAIF Fuel Rod Performance Correlations
  - CPR Correlations
- Data Coupling of Input from MB2 (nodal cross sections & hydraulic data)
- Benchmarking & Sensitivity
  - Hydraulic stability
  - Oscillatory Dryout-Rewetting Tests in KATHY
  - Reactor Oscillations

RAMONA5-FA Validation

> RAMONA5-FA is used to define the relationship between the relative CPR response and the oscillation magnitude (DIVOM)

- RAMONA5-FA was benchmarked to assure that the theoretical models and solution scheme accurately predict the CPR response under oscillatory conditions
  - Hydraulic Decay Ratios confirm the density wave dynamics
  - Hydraulic and Reactor Oscillation Frequencies confirm the density wave dynamics and is an important consideration in the CPR response
  - Oscillatory Dryout and Rewet confirms the combination of the RAMONA5-FA hydraulic models and the CHF correlations to predict the CPR response
- Reactor Decay Ratio benchmarks were not necessary since the DIVOM response is nearly independent of the growth rate.

RAMONA5-FA Range of Applicability

> Based on the wide technical and industrial acceptance of RAMONA and the specific FANP benchmarks the following range of applicability is considered appropriate

- BWR-3 through BWR-6
- DIVOM analysis up to and including the onset of CHF conditions
  - RAMONA5-FA has not been qualified for post dryout conditions. Application to this domain would require additional justification
  - RAMONA5-FA has not been qualified for general stability analysis such as decay ratio / exclusion region analysis and would require additional justification

AREVA

Restriction on Option III Solution

AREVA

Restriction on Option III Solution

> Generic DIVOM Part 21 report
- Generic DIVOM slope may be non-conservative
- Interim solution related elevated DIVOM slope to the hot bundle power to average flow ratio
- MELLLA+ operation results in higher hot bundle power to average flow ratios

> Option III solution is not appropriate for MELLLA+ operation so when MELLLA+ operation is approved a valid LTS will be required

> Two Long Term Solutions have been proposed for MELLLA+ operation
- DSS-CD – currently under review
- "Enhance Option III" – Pre-submittal development

AREVA

MELLLA+ Long Term Solutions

> DSS-CD provides additional protection by eliminating the magnitude setpoint by requiring a multiplicity of OPRM confirmations
- Solution based on TRACG simulations
- ATRIUM-10 will be supported by GE TRACG simulations
- FANP will confirm the CPR response with SPCB and the TRAC-G boundary conditions

AREVA

AREVA

Applicability Framatome ANP Methods BWR EPU Conditions Summary

Jerald S. Holm
Manager, Product Licensing
jerald.holm@framatome-anp.com
(509) 375-8142

Rockville, MD
June 7 & 8, 2005

AREVA

Summary

> Objectives for meeting

- Understand perspectives on EPU vs Non-EPU conditions – NRC and FANP
- Summarize FANP analysis approach
  - Fuel vendor
  - Fuel only analyses
  - Plant/Cycle specific analyses – limited generic analyses
- Demonstrate that FANP methods are technically applicable and NRC approved for EPU conditions
  - EPU and Non-EPU range of conditions are essentially the same
- Respond to specific questions about FANP methods