# SAVANNAH RIVER(SR)

This material has been copied
under licence from CANCOPY.
Resale or further copying of this material is
strictly prohibited.

Le présent document a été reproduit
avec l'autorisation de CANCOPY.
La revente ou la reproduction ultérieure
est strictement interdites.

15 1963

TID-18967

# COMPARISON OF THE WORTH OF CRITICAL AND EXPONENTIAL MEASUREMENTS FOR HEAVY WATER MODERATED REACTORS*

by

W. E. Graves and E. J. Hennelly

Savannah River Laboratory
E. I. du Pont de Nemours and Co.
Aiken, South Carolina

MASTER

July 1963

Facsimile Price $ 4.60
Microfilm Price $ 1.70

Available from the
Office of Technical Services
Department of Commerce
Washington 25, D. C.

LEGAL NOTICE

This report was prepared as an account of Government sponsored work. Neither the United States, nor the Commission, nor any person acting on behalf of the Commission:

A. Makes any warranty or representation, expressed or implied, with respect to the accuracy, completeness, or usefulness of the information contained in this report, or that the use of any information, apparatus, method, or process disclosed in this report may not infringe privately owned rights; or

B. Assumes any liabilities with respect to the use of, or for damages resulting from the use of any information, apparatus, method, or process disclosed in this report.

As used in the above, "person acting on behalf of the Commission" includes any employee or contractor of the Commission, or employee of such contractor, to the extent that such employee or contractor of the Commission, or employee of such contractor prepares, disseminates, or provides access to, any information pursuant to his employment or contract with the Commission, or his employment with such contractor.

*The information contained in this paper was developed during the course of work under contract AT(07-2)-1 with the U. S. Atomic Energy Commission.

# COMPARISON OF THE WORTH OF CRITICAL AND EXPONENTIAL MEASUREMENTS FOR HEAVY WATER MODERATED REACTORS

by

W. E. Graves and E. J. Hennelly

Over the past ten years the Savannah River Laboratory (SRL) has operated a large heavy water critical, the PDP[1,2], and an exponential, the SE[3]. Since 1958 the Laboratory has also operated a pressurized exponential, the PSE[4]. The purpose of this paper is to summarize the results of this SRL experience and to give recommendations as to the applicability of the two kinds of facilities in six fields of reactor experimentation:

- Buckling Measurements in Uniform Lattices
- Anisotropic and Void Effects
- Evaluation of Control Systems
- Temperature Coefficients
- Mixed Lattices
- Subcriticality Studies of Fuel for Heavy Water Moderated Reactors

A great deal of data bearing on these subjects from the point of view of experimentation at SRL was contained in two recent review papers by J. L. Crandall[5,6]. Where such data are relevant in the present context they will be discussed, but only referenced rather than reproduced. Data given in detail in the present paper will, for the most part, be previously unpublished.

All six of the above listed topics involve macroscopic lattice parameters. Before dealing with them, a few words would be appropriate on the measurement of unit cell parameters such as thermal utilization, fast fission ratio, etc. by activation

techniques. Although such measurements are more usually carried out in a critical than in an exponential facility there seems no a priori reason why this should be so, provided that the neutron flux is sufficiently high in the exponential. At SRL the neutron source for the SE is a small reactor, the SP[7], and fluxes of $\sim 10^9$ n/cm$^2$-sec can be obtained at the bottom of the exponential tank. It has thus proved possible to make activation measurements of all types in the SE. While there is some reason to expect the measured microscopic parameters to change with leakage, in general the effects are small and/or correctable. Some discussion of such effects is given in the section on control systems. Extensive use of the SE for activation measurements has proved extremely convenient and has permitted the PDP to be used primarily for macroscopic measurements where its large size is a more positive advantage.

Buckling Measurements in Uniform Lattices

At SRL our most accurate values for the bucklings of uniform lattices have been obtained by mapping the flux distributions in critical one-region loadings in the PDP and fitting the data to the appropriate functions. Such a procedure minimizes the possibility of systematic error. However the measurements are expensive, both in terms of critical facility usage and of fuel requirements. They therefore seem justified in only a few circumstances. Two types of lattices, in particular, suggest themselves:

(1) Lattices containing fuel assemblies destined for use in a prototype or full sized power reactor. Here the fuel is already available and there is strong incentive to obtain quite accurate results in order to optimize the operation of the reactor.

(2) Lattices which cover an extreme range of lattice parameters. Here the measurements have as their primary purpose the provision of accurate experimental data for comparison with lattice calculations.

Since SRL, almost alone among laboratories dealing with heavy water lattice physics, has not been concerned in the immediate design of a prototype power reactor, we have felt free to pursue the second of the above alternatives in the PDP. Fuel assemblies used have included natural uranium metal rod clusters[8,9], natural $UO_2$ rod clusters[10], and, more recently, natural uranium metal tubular fuel assemblies. Since both sets of cluster measurements have already been fully reported, the tubular fuel assembly measurements are used as examples here. These latter measurements utilized two types of fuel assemblies: a single tube, and a rod surrounded by two concentric tubes. These assemblies are shown in Figure 1. Bucklings were measured over a range of triangular lattice pitches in the PDP, using standard techniques[8,10]. Both air and $D_2O$ were used as "coolants" within the assembly housings. Buckling results are given in Table I.

A secondary purpose which measurements such as the above serve is to provide a set of reference lattices of known bucklings to test alternate and simpler methods of measuring bucklings. Such measurements include exponential measurements, critical substitution measurements, and null reactivity or PCTR-type measurements.

Exponential measurements of buckling have great potential advantages over one-region critical measurements in terms of reducing time and material requirements as well as the criticality hazards potential. The greatly reduced time requirements can only be realized in practice, however, if the experimental measurements on a given lattice consist solely of measuring the inverse relaxation area $\chi^2$. Such measurements are particularly fast if the $\chi^2$ measurement is made with a flux monitor which is remotely controlled and moves vertically in the lattice. The requirement for this simple type of experiment to be feasible is that changes in the radial buckling of the exponential tank with lattice loading must be small and calculable.

Strong anomalous changes in measured radial bucklings with changing lattice loadings were first observed at the Argonne National Laboratory[11]. The Argonne experiments showed that the changes were independent of the presence or absence of a small reflector, and also indicated that the effects did not arise from external reflectors or foreign materials outside the cadmium-covered exponential tank.

Independently similar observations were made at SRL in a program to compare bucklings measured in one-region criticals and in exponentials. With an assumed constant radial buckling for the exponential, systematic differences appeared between the materi: bucklings measured in the two types of facilities[12]. Later measurements of radial bucklings in the exponential showed that essentially all of the differences could be ascribed to anomalously large changes in these bucklings[13]. The results of the Savannah River intercomparisons are shown in Figure 2[6]. This plot is, of course, only one method of presenting the results. An alternative presentation of the same data is shown in Figure 3. In this plot the exponential-critical difference is essentially a single valued and rather linear function of the material bucklings of the lattices. A physical explanation of these results has not been forthcoming. Similar results have been observed in Switzerland[14]. On the other hand, unpublished measurements referenced by Persson[15] for the ZEBRA exponential gave radial bucklings which fell within the range which would be predicted by standard reactor theory[16].

Another set of measurements bearing on radial buckling changes in exponentials was performed at Babcock and Wilcox[17]. These experiments indicated a strong dependence of radial buckling on the diameter of a cadmium aperture limiting the diameter of the source feeding the exponential.

The authors' conclusion from the above is that, at the present time, accurate exponential measurements in general

require a measurement of the radial buckling as well as the inverse relaxation area $\mathcal{H}^2$, for each lattice studied. Under these conditions, exponentials sacrifice their speed advantages, although the advantage of requiring less material than the criticals is retained. The accuracy of the bucklings obtained will be limited by the accuracy of the radial buckling measurements.

In practice, however, it is probably preferable to use values of the radial buckling that were obtained from previous exponential experiments or from intercalibrations with critical experiments, and accept the possibility of some small systematic error in the final result. Studies such as the SRL correlation[11] show that within a fairly limited range of lattice parameters, the error may even be less than the error on a single measurement of radial buckling.

A related problem in exponential experiments arises from the fact that it is rarely convenient to use a lattice pitch such that the lattice fits exactly into the exponential tank, i.e., the number of fuel assemblies times the area of a unit cell is usually not equal to the area of the tank. It is usually assumed that these effects do not change the radial buckling appreciably. This assumption is not a good one when the diffusion coefficient of the lattice is appreciably different from that of $D_2O$[18]. Furthermore, conventional two-group theory does not adequately predict the change in radial buckling[18]. It would thus appear advisable to directly measure the radial buckling in lattices which combine reflectors with air-filled housing tubes.

The critical substitution technique has been widely used at SRL as an alternative to the exponentials using comparable quantities of test fuel. In this technique the experiment begins with the measurement of the critical moderator height in a one-region loading of some standard lattice. Following this measurement, one or more of the central fuel assemblies are replaced by test fuel assemblies, and the critical moderator height again measured. If this process is repeated one or more times with different numbers of test assemblies, it is usually referred to as a successive substitution technique. The buckling of the test lattice must be inferred from the measured critical moderator heights.

Of the random sources of error in this type of measurement, the most important are (a) uncertainty in the measurement of the moderator height itself, (b) uncertainty in the temperature changes in the lattice between critical runs, (c) uncertainty in the moderator degradation between critical runs, and (d) quality control uncertainties in the test fuel assemblies. At SRL the relative moderator heights in the PDP are measured to $\pm 0.02$ cm and the relative lattice temperatures to $\pm 0.03^{\circ}C$. These uncertainties contribute negligible error to the results. Frequent remeasurements of the one-region critical moderator height eliminate (c) as an important source of error. Our largest source of random error in this type of experiment has been in quality control of a small number of test fuel assemblies[19].

A more serious problem than random error is the avoidance of systematic errors in the conversion of measured moderator heights into lattice bucklings. A perturbation analysis described by Persson[15,20] has enabled the Swedish group to obtain quite remarkable accuracy in interpreting successive substitution measurements. The use of this method of analysis at SRL has proved quite satisfactory over a large range of fuel assemblies, although quality control difficulties obscure systematic errors less than 0.05 $m^{-2}$[19]. As an alternative the two-group, two-region critical equations for a single substitution measurement give satisfactory results if the mismatch in resonance escape probability between reference and test region is not large[19].

When fuel sufficient for an exponential loading is available, the same fuel used in critical successive substitution measurements in an appropriate host lattice will probably produce somewhat more accurate results with a somewhat greater expenditure of time. Such differences are not very important, however. The greatest usefulness of critical substitution measurements occurs when there is insufficient test fuel for an exponential loading. With the substitution technique, bucklings can be measured to within 0.10-0.15 $m^{-2}$ with as few as seven test assemblies (assuming a hexagonal lattice pattern).

There is no reason in principle why the substitution method could not be applied in a subcritical exponential and indeed such measurements have been performed at other sites[21,22]. Random errors in the $\mathcal{H}^2$ measurements become important in such measurements, however, and the accuracy of the results is lowered correspondingly.

The null reactivity method pioneered at the PCTR and applied to exclusively heavy water moderated lattices at the PLATR[23] requires smaller amounts of material than any of the buckling measurements described thus far. Somewhat offsetting this advantage is the more indirect nature of the measurement compared to the others just described. That is, after experimentally verifying that a given poisoned lattice has an infinite multiplication constant of unity, a two-step calculational process must follow to obtain the buckling of the unpoisoned lattice, which is the quantity of direct interest to the lattice designer. These steps are, of course, the calculation of the $k_\infty$ of the lattice without poison, and then the calculation of the buckling through a critical equation.

The agreement between measurements of bucklings at SRL and measurements of $k_\infty$ by the null reactivity method at PCTR and PLATR[23] has been discussed by Crandall[6]. The essential conclusion was that no important systematic difference between the two types of measurements has been observed.

Anisotropic and Void Effects

Light water lattices have an inherent anisotropy resulting from the large differences in diffusion coefficients between the fuel and $H_2O$. In general, this is not the case in heavy water lattices where strong anisotropic effects are ordinarily encountered only when the lattices contain appreciable amounts of gas voids. As with the isotropic lattices, bucklings for the anisotropic heavy water lattices are best measured in

full scale criticals. Examples of such measurements from the PDP program are given in Table I and Reference (10). However, except for gas-cooled power reactor lattices, the voided lattices are usually studied only for accident analysis and the accuracy of a full critical is usually not justified. Here buckling changes between the voided and unvoided lattice are usually obtained by critical substitution techniques[19]. Exponential measurements are ruled out if the lattices contain large void fractions, because of the anisotropy of the lattices.

However, simply determining changes in buckling between the voided and unvoided lattices is not sufficient. The primary usefulness of such data is in safety analyses of the consequences of the coolant boiling completely out of the fuel assemblies. In such analyses, the change in the effective multiplication constant, not the buckling, is the crucial factor. Hence changes in the migration area must also be known. Several methods which have been used at SRL to obtain this information experimentally are described below.

The first method of measuring migration areas involves positive period measurements in a critical facility. This technique, as applied to $UO_2$ rod cluster lattices, has been described previously[10,6]. Briefly the procedure is as follows. The pile is held critical at a constant power for twenty minutes or more to establish delayed neutron equilibrium, and the critical moderator height is measured. The moderator is then pumped to a

larger height, pile power being maintained constant by insertion of control rods. After the new moderator height has been measured, the control rods are withdrawn rapidly, sending the pile on a positive period. The asymptotic period is obtained by monitoring the flux after a suitable[24] waiting time.

The change in vertical buckling can be computed from the moderator heights and known vertical extrapolation distances, while $\Delta k_{eff}$ can be obtained from the measured value of the period plus an inhour relation. Values of vertical migration area are then deduced from $(-\Delta k_{eff}/\Delta B_z^2)$ and a (usually two group) critical equation.

Errors in absolute values of migration areas obtained in this way depend not only on errors in the moderator height and period measurements, but also on uncertainties in the inhour relation and the critical equation. Such uncertainties are considerably larger in heavy water lattices than in other lattices because of the importance of photoneutron production and the uncertainty in the escape probability from the fuel of gamma rays giving rise to photoneutrons. However, inhour equation uncertainties practically cancel out if one takes ratios of migration areas in lattices with $D_2O$ in and $D_2O$ out of the void channels. Such ratios are then subject only to the experimental uncertainties in moderator height and period measurements.

Previously reported results[10,6] for this type of measurement in the PDP agreed rather well with predictions based on the Benoist theory[25,26]. The most recent PDP measurements of this type were made using the single natural uranium metal

tube shown in Figure 1. Results are given in Table II. In this case the Benoist three-region model cannot be used directly to obtain calculated values. Instead, the Benoist theory was used to calculate the change in vertical diffusion coefficient on voiding the housing tube-fuel tube annulus alone, and the Behrens' theory[27] to calculate the change on voiding the space within the fuel tube alone. The two changes were simply added. Changes in effective thermal cross section of the cell were computed using the P-3 approximation. The resulting calculated values of $L_z^2 + \tau_z$ are given in Table II for comparison with experiment. The agreement between experimental and calculated values is not bad, although outside of the assigned experimental error.

A less time consuming and in some ways more satisfactory approach to the problem of measuring lattice anisotropy effects lies in determining changes in diffusion coefficients rather than migration areas. Changes in both the radial and vertical one-group diffusion coefficients following $D_2O$ coolant loss have been measured by this technique in the PDP. In the vertical measurement, a single test assembly is placed in the central lattice position of the PDP with the rest of the pile containing reference fuel assemblies of well known properties. The critical moderator height is then measured with various levels of $D_2O$ coolant in the test assembly housing. In the corresponding radial measurement, critical moderator heights are measured with coolant in and out of the test housing and with the test assembly placed in lattice positions at various

radii in the pile. Remote expulsion of coolant must be used to take full advantage of the potential sensitivity of the method. Both sets of measurements are analyzed by perturbation theory[20] to obtain $\delta D_z/D$ and $\delta D_r/D$. Lattice anisotropy can be obtained from these values. This method, as applied to $UO_2$ rod clusters, has been discussed in detail previously[19,6].

Results are now available for changes in vertical one-group diffusion coefficients over a rather wide range of $UO_2$ tubular assemblies at two triangular lattice pitches, 9.33 inches and 11.10 inches. Cross sections of the fuel assemblies are shown in Figure 4. The natural $UO_2$ within the aluminum tubes was vibratorily compacted to a density of 8.9 $gm/cm^3$. The assemblies were constructed to permit the partial or total expulsion of coolant from any coolant channel or combination of channels by compressed helium. The results obtained are plotted in Figure 5 against void fraction in the cell. In principle, of course, the values of $\delta D_z/D$ are not a single valued function of the cell void fraction, but for the small void fractions involved in these assemblies the assumption is justified in practice.

Two calculated curves are also given in Figure 5. The lower one was computed by homogenizing transport cross sections. The resultant expression is $\delta D/D = X/(1-X)$ where X is the void fraction (ratio of void volume to cell volume). Since this method ignores streaming, $\delta D/D$ is underestimated.

The higher curve is based on the Benoist model[25,26] and assumes that $\delta D/D$ can be computed for each channel individually and the results added. The agreement between this latter curve and the experimental points is quite adequate.

Another type of anisotropy measurement, this time again yielding the change in migration area, involves only measurements of buckling changes. First, the buckling change on voiding the test assembly housings is measured by the critical substitution technique. Then the fuel assemblies are poisoned down and the buckling change remeasured. It is important that the poison be introduced quite close to the fuel, so that changes in flux ratios between poison and fuel on expelling the coolant can be reliably calculated by P-3 or other means. For tubular assemblies, copper sheet is convenient. Using one-group theory it is then possible to set up two simultaneous equations in two unknowns, $\Delta k_\infty$ and $\Delta M^2$ on voiding, and solve for these. The technique has been described in detail[28]. It has been used both with tubular and cluster type fuel assemblies at SRL. Our general conclusions on this method are that it is feasible but rather laborious, and appears to offer no particular advantages over the perturbation method of obtaining diffusion coefficient changes already discussed.

Although the perturbation method yields values of lattice anisotropy, it would be desirable to have at least a few examples of lattice anisotropy measurements made in a more direct manner. The most direct method of measuring anisotropy,

and therefore the one least subject to systematic error, would involve measuring the geometrical buckling of a lattice at critical in at least two different geometric configurations. A cooperative program with CEA-Saclay is presently underway at SRL to make precisely this measurement in a highly anisotropic lattice. The fuel assembly is a cluster of 19 half-inch diameter $UO_2$ rods on a 0.650 inch center-to-center spacing, contained in a five inch OD air-filled aluminum housing. The lattice pattern is square, with a 9.09 inch pitch. The identical fuel assemblies on a 9.33 inch triangular pitch were previously used in anisotropy measurements by the perturbation techniques, and yielded a ratio of vertical to radial diffusion coefficient of 1.20[6]. Radial and vertical buckling measurements at critical are being made on the square lattice, first using the full radial size of the PDP and then a greatly reduced radius. The results should permit the ratios of vertical to radial diffusion coefficients to be specified to within $\pm 0.03$. Perturbation measurements are also being made for comparison.

This same direct measurement of anisotropy can be accomplished by comparing results obtained in two different exponentials of greatly different radial bucklings. Such a comparison was made as part of an exchange program between A. B. Atomenergi, Studsvik, Sweden, and SRL. The fuel assemblies consisted of four coaxial uranium metal tubes in aluminum pressure tubes. Buckling measurements were made with $D_2O$ and with air within the housings in the 1-meter-diameter exponential ZEBRA[16]

and later in the 1.52-meter-diameter SE. Data on the ZEBRA measurements have been reported by A. B. Atomenergi[29]. The comparison has been summarized by Rogers[30]. The resulting anisotropies are plotted in Figure 6.

Evaluation of Control Systems

Two major questions arise in connection with reactor physics studies of control systems: the control system worth and the flux perturbations that it can introduce. If the control pattern is regular within the lattice, then the question of worth can be answered most conveniently by exponential measurements. Care must be exercised in analyzing the results, however, as shown by the following illustration.

An example of a lattice used for control rod measurements in the SE[31] is shown in Figure 7. The triangular lattice pitch was seven inches. At this pitch, 61 lattice positions fall within the SE tank wall. Seven lattice positions were occupied with clusters of control rods as shown. This lattice pattern has been discussed previously in another connection[32]. Values of $\mathcal{H}^2$ were measured with no control rods in place, and then with various combinations of control rods in the clusters. To a first approximation, the buckling worth of any control rod combination is simply the difference between the $\mathcal{H}^2$ measured in that case and the $\mathcal{H}^2$ with no rods in place. To obtain a more accurate result, one must look more critically at the difference between the exponential loading and the loading

which is really of interest: i.e., a large section of lattice with exactly a six-to-one ratio of fuel to control clusters, in an approximately flat radial flux ($B_r^2 \sim 0$). It is evident that there are two effects in the exponential loading which would not be present in a larger uniform loading in a flat flux: (a) There are twelve extra fuel assemblies in the outer part of the exponential loading over and above the part of the lattice that has a six-to-one fuel-to-control ratio, and (b) The control pattern is centered in a highly buckled flux. The first effect will make the "first approximation" result underestimate the rod worths, while the second effect will make it overestimate the worths.

In analyzing the SE experiment, the first step in taking account of these differences was to perform a two-group two-region calculation to obtain the buckling of the portion of the lattice with an exact six-to-one fuel-to-control ratio. The region comprising the inner 49 lattice positions was cylindricized. The region from this boundary to the extrapolated tank boundary was assumed to be filled with a lattice in which every lattice position was occupied by fuel. The buckling of such a lattice was known from previous experiments[31]. From calculated two-group parameters and measured values of $\mathcal{H}^2$, the effective material buckling of the inner region was computed. This buckling then had to be corrected to that which the lattice would have in a radially flat flux. The latter correction is most conveniently made by assuming that only the thermal utilization is affected, and calculating the change in thermal utilization.

It can easily be shown, if one ignores moderator absorption, that for this lattice, centered on a control cluster,

$$\frac{f - f'}{f} = (1 - f) \frac{6\ \Sigma' J_o(B_r r) - \Sigma J_o(B_r r)}{f\ \Sigma J_o(B_r r) + 6(1 - f)\Sigma' J_o(B_r r)} \qquad (1)$$

where f is ratio of fuel absorption to fuel-plus-control absorption in a radially flat flux, f' is the same quantity in a flux having a radial buckling of $B_r^2$, r is the distance from the central control cluster, $\Sigma$ is the summation over the lattice positions at which fuel assemblies are located, and $\Sigma'$ is the summation over the lattice positions at which control clusters are located. Calculated lattice parameters were used to convert the results of Equation (1) to a buckling correction to be made to the "first approximation" values of rod worths. The final correction curve is shown in Figure 8. From the direction of the correction it is evident that the favorable position of the control system, with respect to the center of symmetry of the flux was more important than the extra 12 fuel assemblies. The corrected rod worths were in closer agreement with critical facility results than the uncorrected ones[33].

The purpose of presenting the above example was to indicate that exponential measurements to determine the worth of control systems must be interpreted with some care even if the control pattern is quite regular. If the pattern is only slightly irregular, statistical weight arguments may permit proper analysis of exponential results. For really irregular

lattices, however, one must resort to a mockup in a critical facility. An example of such experiments in which the control system played an important part is the set of measurements made in the PDP on a mockup of the lattice of the HWCTR[34].

As one moves from the area of control system worths to the flux perturbations that the control systems can produce, the only alternative to critical experiments becomes calculation. The need for direct measurements in such an inhomogenous lattice as that of the HWCTR[34] is obvious. However, these measurements can also be important for much more regular lattices. This need is particularly acute if one looks on the control system of a power reactor not as a producer of undesirable flux perturbations, but rather as a powerful means of flattening the flux distribution both radially and vertically and thus achieving a considerably higher total pile power under the same heat flux limitations. Such control systems have to be rather complex, and could lead to rather unexpected flux shapes if not used carefully. An example of such an effect was observed in the PDP some time ago. A lattice similar to that shown in Figure 7 was loaded into the PDP, completely filling the tank. The control rods were placed so as to be slightly ($\sim$2 cm) off the theoretical lattice positions, and all in the same direction. The over-all pile flux was rather badly tilted as a result. Fluxes in many lattice positions were 20% higher than the fluxes at the corresponding positions on the opposite side of the pile[35].

Temperature Coefficients

It is rarely possible, in exponential or zero power critical facilities, to measure directly the reactivity changes that would occur as the result of the nonuniform temperature changes that would obtain in the operation of a high powered reactor. What is usually obtained by a temperature coefficient measurement in a zero power facility is the change in lattice buckling as the lattice is heated uniformly. With natural uranium systems in which there are no poisonous (target) materials, however, such measurements are usually sufficient to predict the actual temperature coefficient of an operating high power reactor. The work is most conveniently performed in an exponential, because of the smaller quantities of heavy water involved. At SRL, measurements up to about 90°C are carried out in the SE[3], while measurements up to 215°C are carried out in a pressurized facility, the PSE[4]. Buckling measurements at various temperatures are straightforward, and no special techniques are required. An example of such measurements at SRL involved fuel assemblies for the Swedish R3/Adam reactor[36].

The agreement of experiment with calculation for natural uranium lattices seems adequate for practical purposes[6] although the dependence of $\eta$ on temperature remains uncertain.

Another type of experiment in which the small amount of heavy water involved gives the exponential an even more obvious advantage over a critical involves measuring the reactivity effects of contamination of heavy water with light water.

Measurements in the SE have involved moderator purities ranging from 99.8 mol % $D_2O$ down to 92% $D_2O$[32].

Mixed Lattices

Actual reactors rarely use the simple uniform lattices to which the exponentials basically apply. The most obvious lattice irregularity is the control system. The interpretation of exponential experiments in this case has already been discussed. Additional lattice irregularities appear in lattices which incorporate nuclear superheat, "spikes", or isotope production. In heavy water exponentials of conventional size, it would usually not be possible to fit an integral number of the "supercells" which repeat the lattice pattern into the tank. In addition the measured value of $\gamma^2$ is sensitive to how the lattice is centered in the tank. For such lattices, critical experiments provide more easily interpretable measurements of reactivity.

There are two quite different sets of circumstances which have given rise to critical experiments with mixed loadings at SRL: (a) A specific lattice of a heterogeneous nature has been designed on the basis of calculation, but it is clear that the state of the art of calculation is not high enough to depend exclusively on calculation. A close mockup is therefore assembled in a critical facility. (b) It is desired to test fundamental methods of calculating the flux ratios and criticality of mixed loadings in general.

An example of measurements of type (a) is the set of experiments made in the PDP on a nuclear mockup of the HWCTR[34].

A lattice diagram of the HWCTR is shown in Figure 9. A glance at this diagram makes it clear that the uniform lattice calculation methods generally used in connection with heavy water lattice physics are inapplicable here. The mockup experiments served not only to prove the feasibility of the design and provide much information necessary to satisfactory operation, but also provided a wealth of experimental data on which to test calculational methods. The chief calculational method used thus far by the HWCTR group is based on the Westinghouse PDQ-3 code[37] and the auxiliary codes necessary to provide input information for it. Generally satisfactory agreement with experiment has resulted[38].

Such a lattice as that of the HWCTR is not ideal, however, for providing a test of theory. It is too complex, with too much room for accidental compensating errors in the calculation. To provide a good test of calculational methods, more precise critical experiments with simpler heterogeneous lattices would seem preferable. Such a set of experiments has recently been completed in the PDP.

The philosophy behind this short set of experiments was to provide critical moderator heights and flux ratio measurements in a number of mixed lattices chosen on the basis of availability of fuel components and on the convenience of the predicted critical moderator heights. Cross sections and dimensions of fuel and poison assemblies used in those experiments are shown in Figure 10. All lattices were assembled at a seven

inch triangular pitch in the central 85 positions in the PDP. These 85 positions were contained within a boundary of 36 poison rods. The five lattices studied are shown in Figures 11-15. The inner radius of the PDP tank wall is 247 cm, so that the reflector beyond the poison rod boundary was effectively infinite.

Vertical flux traverses to determine the vertical extrapolation distances were made by irradiating gold pins. These extrapolation distances were applied to the critical moderator heights measured when the gold pins with their holders were removed from the lattice. A small correction to the critical vertical bucklings thus obtained accounted for the presence in the lattice of a few aluminum guide tubes for control rods (the rods themselves always being completely removed from the lattice at the time of the measurement of the critical moderator height). To make this correction the worth of a few representative guide tubes was measured by inserting extra tubes, and the worth of the tubes already present was inferred from statistical weights. These standard techniques have been described in more detail previously[10]. The corrected critical vertical bucklings then correspond to the idealized lattice diagrams of Figures 11-15, a moderator purity of 99.59 mol %, and a temperature of 22°C.

During the irradiation to determine vertical extrapolation distances, flux ratios were also measured between lattice components of different types. Copper foils machined to the

same dimensions as the various fuel assemblies were enclosed in aluminum catcher foils and installed in their respective fuel assemblies. They were then irradiated and subsequently cut up and counted. Cadmium-covered copper foils placed at a different level in the lattice permitted epicadmium activations to be subtracted off the bare foil activities. A correction for the over-all radial flux shape in the pile then yielded the ratios of thermal fluxes averaged over the different lattice components in a flat radial flux. Results of these experiments are given in Table III.

There are two general methods of calculation which should permit computation of the above results. One is the heterogeneous reactor theory methods associated with the names of Feinberg[39] and Galanin[40], while the other involves two dimensional diffusion theory codes, such as PDQ-3[37]. Both of these methods will be tested against the data in Table III, but calculational results are not yet available.

## Light Water Subcriticality Studies of Fuel for Heavy Water Moderated Reactor

Most reactor physics studies with heavy water have involved the use of natural uranium fuel. However, economic studies[41] have shown that improved operation can be achieved by slight enrichment of the natural uranium fuel with U-235. The recycling of plutonium in heavy water reactors containing predominately natural uranium fuel is also attractive economically. Criticality problems will exist in the manufacturing,

shipping and storage of U-235 enriched or plutonium bearing fuel. A heavy water exponential is an ideal facility for measuring the light water reactivity of various arrangements because the usual size of an exponential (1 to 1.5 meters diameter) provides a facility with an effectively infinite reflector of $H_2O$.

The data are all obtained using exponential techniques. The method used at SRL is outlined below.

1. The test fuel array is added into the SE tank without any moderator present.
2. The neutron multiplication is monitored as $H_2O$ is added to the lattice to determine that it is in fact subcritical. Safety rods and safety circuits are provided which are actuated by signals from the neutron monitors.
3. Exponential measurements of $\gamma^2$ are obtained for the lattice being studied. Regular rectangular or triangular lattice arrays are used.
4. The transverse buckling is determined by measuring the vertical buckling for two or more different sizes of the same lattice arrangement. The material buckling is assumed constant for the different sized lattices. In this way it is possible to determine the value of the reflector savings and hence the transverse buckling that is consistent with all of the measurements.

5. Addition of the vertical or exponential buckling and the transverse buckling gives the material buckling,

$$B_m^2 = B_{x,y}^2 - \mathcal{H}_z^2$$

Maximum values of buckling as high as 90 $m^{-2}$ have been studied in the SE for 3" diameter, 3 w/o U-235, uranium metal rods. Maximum bucklings as low as 2-3 $m^{-2}$ have been measured for fuel of lower enrichment. Bucklings in the lower range cannot conveniently be measured in light water criticals because the amount of material would be extremely large. The exponential has the same inherent advantages as mentioned previously for $D_2O$ reactor physics studies. Bucklings in the higher ranges can be measured in critical facilities especially designed for that purpose, but in many cases the data are not as easy to interpret theoretically because regularly shaped lattices are not always achieved at criticality.

Experience at Savannah River has shown that the exponential technique outlined above is very useful, does not require additional facilities, and the exponential facility can readily be converted for $D_2O$ or $H_2O$ measurements, as the need arises.

## BIBLIOGRAPHY


(1) A.E. Dunklee, The Heavy Water System of the Process Development Pile, DP-567 (1961).

(2) N.P. Baumann, Process Development Pile Measurements of Parameters of Natural Uranium in Heavy Water, DP-407 (1959).

(3) O.A. Towler, Jr. and J.W. Wade, "Exponential Measurements in Heavy Water Systems", Chem. Eng. Progr. Symposium Ser. 52, 177-81 (1956).

(4) E.J. Hennelly, "Pressurized Subcritical Facility". Nucleonics 19, No. 3, 104-5 (1961).

(5) J.L. Crandall, Status of the United States Effort in $D_2O$ Reactor Physics, DP-787 (1962).

(6) J.L. Crandall, Efficacy of Experimental Physics Studies on Heavy Water Lattices, DP-833 (1963).

(7) R.C. Axtmann et al., Initial Operation of the Standard Pile, DP-32 (1953).

(8) T.J. Hurley, Jr., H.R. Fike, and G.F. O'Neill, "Experimental Bucklings of Heavy Water Moderated Lattices of Natural Uranium Metal Rod Clusters", Nuclear Sci. and Eng. 12, 341-347 (1962).

(9) T.J. Hurley, Jr., Measured Lattice Parameters for Natural Uranium Metal Rod Lattices in $D_2O$, DP-777 (1963).

(10) W.E. Graves, G.F. O'Neill and H.R. Fike, "Experimental Bucklings and Void Effects in Heavy Water Lattices of Natural Uranium Oxide Rod Clusters", Nuclear Sci. and Eng., 16, 186-195 (1963).

(11) W.C. Redman, "Recent Experience with $D_2O$ Subcritical Assemblies", Proceedings of the University Subcritical Assemblies Conference, TID-7619 (1961).

(12) E.C. Wingfield and E.J. Hennelly, "Exponential Measurements of Natural Uranium Rods in Heavy Water and Comparisons with Critical Experiments", Nuclear Sci. and Eng., 12, 348-58 (1962).

(13) E.C. Wingfield, unpublished. (See Reference (6)).

(14) H.R. Lutz, R. Meier, private communication.

(15) R. Persson, E. Hellstrand, and E. Johansson, Experimental Reactor Physics Work on Heavy Water Lattices in Sweden, presented to IAEA Panel on Heavy Water Lattices at Vienna, February 1963.

(16) R. Persson and E. Blomsjö, "Exponential Pile Measurements with Natural Uranium and Heavy Water", J. Nuclear Energy 3, 188-206 (1956).

(17) L.G. Barrett and J.H. Mortenson, Exponential Experiments on Lattices Moderated by $D_2O$-$H_2O$ Mixtures., BAW-1232 (1962).

(18) W.B. Rogers, Jr., "Effects of Reflectors and Voids on Exponential Measurements in $D_2O$ Natural Uranium Lattices", Trans. Am. Nuc. Soc. 5, No. 1, P. 74 (1962).

(19) W.E. Graves, Analysis of the Substitution Technique for the Determination of $D_2O$ Lattice Bucklings, DP-832 (1963).

(20) R. Persson, One-Group Perturbation Theory Applied to Substitution Measurements with Void, RFX-74 (1961).

(21) R. Persson et al., "Exponential Experiments on Heavy Water Natural Uranium Metal and Oxide Lattices", Proceedings of International Conference on the Peaceful Uses of Atomic Energy, Geneva 1958, 12, 364-373 (1958).

(22) H. Lutz, R. Meier and W. Winkler, "Unterkritische Zweizonenanordnungen" Neue Technik 3, No. 6, 343-351 (1961).

(23) W.L. Brooks, et al., Pawling Lattice Test Rig -- Test Report No. 1, PLATR-PCTR Comparison, NDA-2131-40 (1961).

(24) B.J. Toppel, "Sources of Error in Reactivity Determinations by Means of Asymptotic Period Measurements", Nuclear Sci. and Eng. 5, 88-98 (1959).

(25) P. Benoist, General Formulation of the Diffusion Coefficient in a Heterogeneous Medium Which May Contain Cavities, Commissariat à L'Energie Atomique, Paris, France. Report SPM-522 (1958).

(26) P. Benoist, A Simplified New Expression for the Radial Diffusion Coefficient for Fueled Channels. Commissariat à L'Energie Atomique, Paris, France. Report SPM-710 (1962).

(27) D.J. Behrens, The Migration Length of Neutrons in a Reactor, A.E.R.E. T/R 877, (1956).

(28) A.E. Dunklee, PDP Measurements of Coolant Void Reactivity Coefficients, DP-641 (1962).

(29) I. Erlandsson and R. Persson, Exponential Measurements on the SRL Four-Tube Fuel Assemblies with Void, A. B. Atomenergi, Studsvik, Sweden, RFX-89 (1962).

(30) W.B. Rogers, Jr., "Experimental Determination of Anisotropy in $D_2O$-Uranium Lattices Containing Voids", Trans. Amer. Nuc. Soc. 6, No. 1, 51-52 (1963).

(31) H.R. Fike, unpublished.

(32) B.S. Finn and J.W. Wade, "Effects of the Contamination by Light Water on Lattices of Natural Uranium Rods in Heavy Water", Nuclear Sci. and Eng. 7, 93-96 (1960).

(33) S.V. Topp, unpublished.

(34) W.E. Graves, Physics Data from a Mockup of the HWCTR Lattice in the PDP, DP-457 (1960).

(35) J.L. Crandall, et al., unpublished.

(36) N.P. Baumann, W.E. Graves, E.J. Hennelly, and G.F. O'Neill, High Temperature Exponential Measurements and Room Temperature Critical Substitution Measurements on Swedish R3/Adam Fuel Assemblies in Heavy Water, Nukleonik, Band 4, Heft 5, 200-208 (1962).

(37) W. R. Cadwell, PDQ-3, A Program for the Solution of the Neutron-Diffusion Equations in Two Dimensions on the IBM-704, WAPD-T17-179 (1960).

(38) B.C. Rusche, private communication.

(39) S.M. Feinberg, "Heterogeneous Methods for Calculating Reactors: Survey of Results and Comparison with Experiment". Proc. of the International Conf. on the Peaceful Uses of Atomic Energy 1955, Vol. V, P/669, 484-500 (1955).

(40) A.D. Galanin, "The Thermal Coefficient in a Heterogeneous Reactor", Proc. of the International Conf. on the Peaceful Uses of Atomic Energy 1955, Vol. V, P/666, 477-483 (1955).

(41) D. F. Babcock, et al., An Evaluation of Heavy Water Moderated Power Reactors, DP-830 (1963).

## TABLE I

## BUCKLINGS[a] OF LATTICES CONTAINING TUBULAR NATURAL URANIUM FUEL ASSEMBLIES

| Fuel[b] Assembly | Triangular Lattice Pitch, In. | "Coolant" | Corrected Experimental Buckling, $m^{-2}$ | | |
|---|---|---|---|---|---|
| | | | $B_z^2$ | $B_r^2$ | $B_m^2$ |
| Two Tubes and One Rod | 9.33 | Air | 2.12 ± 0.06 | 3.78 ± 0.05 | (5.90 ± 0.08)[c] |
| | | $D_2O$ | 1.78 ± 0.08 | 3.74 ± 0.03 | 5.52 ± 0.09 |
| | 12.12 | Air | 3.86 ± 0.06 | 2.12 ± 0.03 | (5.98 ± 0.07) |
| | | $D_2O$ | 3.31 ± 0.07 | 2.13 ± 0.02 | 5.44 ± 0.07 |
| | 14.00 | Air | 3.41 ± 0.06 | 1.64 ± 0.01 | (5.05 ± 0.06) |
| | | $D_2O$ | 2.82 ± 0.05 | 1.66 ± 0.02 | 4.48 ± 0.05 |
| Single Tube | 9.33 | Air | 1.98 ± 0.05 | 3.74 ± 0.02 | (5.72 ± 0.06) |
| | | $D_2O$ | 2.90 ± 0.08 | 3.83 ± 0.03 | 6.73 ± 0.09 |
| | 12.12 | Air | 3.12 ± 0.05 | 2.11 ± 0.03 | (5.23 ± 0.06) |
| | | $D_2O$ | 3.43 ± 0.05 | 2.16 ± 0.04 | 5.59 ± 0.06 |
| | 14.00 | Air | 2.71 ± 0.04 | 1.67 ± 0.02 | (4.38 ± 0.04) |
| | | $D_2O$ | 2.70 ± 0.04 | 1.69 ± 0.02 | 4.39 ± 0.04 |

(a) At 99.59 mol % $D_2O$ and 22°C.

(b) See Figure 1.

(c) Bucklings enclosed in parentheses refer to anisotropic lattices.

## TABLE II

## PERIOD MEASUREMENTS

### Single Tube Assembly, 9.33" Lattice Pitch

| Change in Pile Height, cm | $-\Delta B_z^2$, $m^{-2}$ | Doubling Time sec. | Experimental* $-\Delta k_{eff}/\Delta B_z^2$ $cm^2$ | Experimental* $L_z^2+\tau_z$ $cm^2$ | Calculated $L_z^2+\tau_z$ $cm^2$ |
|---|---|---|---|---|---|
| Air Filled Assemblies | | | | | |
| 1.87 | 0.0294 | 52 | 316 ± 5 | | |
| 1.63 | 0.0256 | 61 | 325 ± 5 | | |
| 1.46 | 0.0230 | 70 | 324 ± 5 | | |
| 1.32 | 0.0208 | 80 | 328 ± 6 | | |
| 1.08 | 0.0170 | 101 | 334 ± 7 | | |
| 1.03 | 0.0162 | 109 | 330 ± 7 | | |
| | | Avg. | 326 ± 2.5 | 357 ± 2.5 | 360 |
| $D_2O$ Filled Assemblies | | | | | |
| 1.46 | 0.0403 | 52 | 230 ± 4 | | |
| 1.44 | 0.0398 | 52 | 232 ± 4 | | |
| 1.23 | 0.0340 | 64 | 235 ± 4 | | |
| 1.13 | 0.0313 | 74 | 230 ± 4 | | |
| 1.12 | 0.0308 | 74 | 233 ± 4 | | |
| 0.97 | 0.0269 | 87 | 238 ± 5 | | |
| 0.97 | 0.0268 | 87 | 238 ± 5 | | |
| 0.78 | 0.0215 | 113 | 241 ± 6 | | |
| | | Avg. | 235 ± 2.3 | 256 ± 2.3 | 245 |
| $\frac{(L_z^2+\tau)_{air\ filled}}{(L_z^2+\tau)_{D_2O\ filled}}$ | | | | 1.39 ± 0.04 | 1.47 |

*Assigned errors based upon known random errors only and do not include possible systematic errors in the experimental method or the period-reactivity relationship.

## TABLE III

## RESULTS OF MIXED LATTICE EXPERIMENTS

| Lattice Number[a] | Critical Vertical Buckling, $m^{-2}$ | | Average Subcadmiun Flux Ratios[b] | Average Subcadmium Neutron Absorption Ratios[b] |
|---|---|---|---|---|
| 1 | 2.64 | | -- | -- |
| 2 | 0.98 | | -- | -- |
| 3 | 0.95 | IV/V[c] | 1.65 | 0.591 |
| 4 | 2.20 | I/III | 0.828 | 3.37 |
| 5 | 3.43 | I/II | 1.04 | 1.62 |
| | | I/III | 0.787 | 3.21 |

(a) See Figures 11-15.

(b) In assembly II, the flux and absorption refers to the fuel alone, not cladding or support tube. In assemblies III and IV, the flux and absorption refers to the one-inch diameter components, not including the aluminum containing tube. In assembly V, they refer to the Li-Al alloy alone. Ratios are corrected to an overall flat radial flux.

(c) See Figure 10.

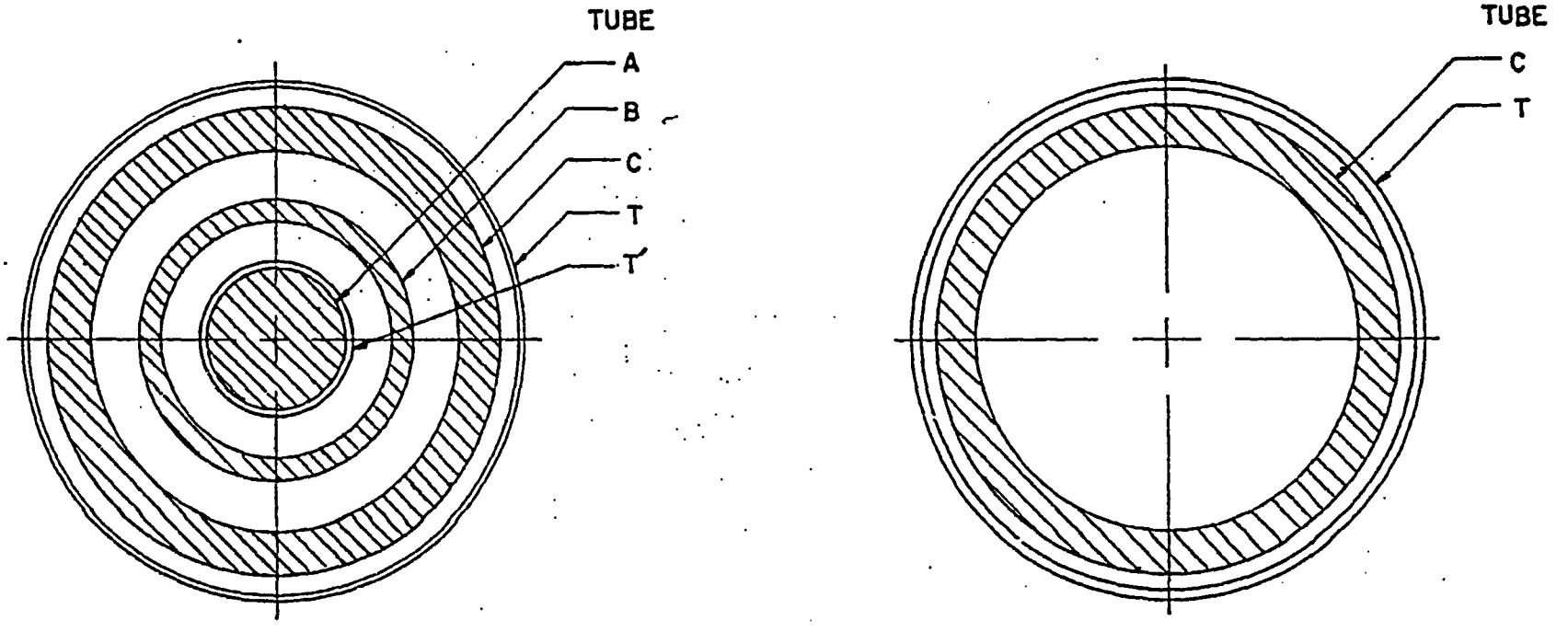


| TUBE | O.D.(in) | I.D.(in) | MATERIAL |
|---|---|---|---|
| A | 0.998 | | NATURAL U |
| B | 2.120 | 1.760 | NATURAL U |
| C | 3.500 | 2.860 | NATURAL U |
| T | 3.890 | 3.840 | AL (6063) |
| T' | 1.090 | 1.026 | AL (1100) |

FIG. 1 TUBULAR METAL FUEL ASSEMBLIES

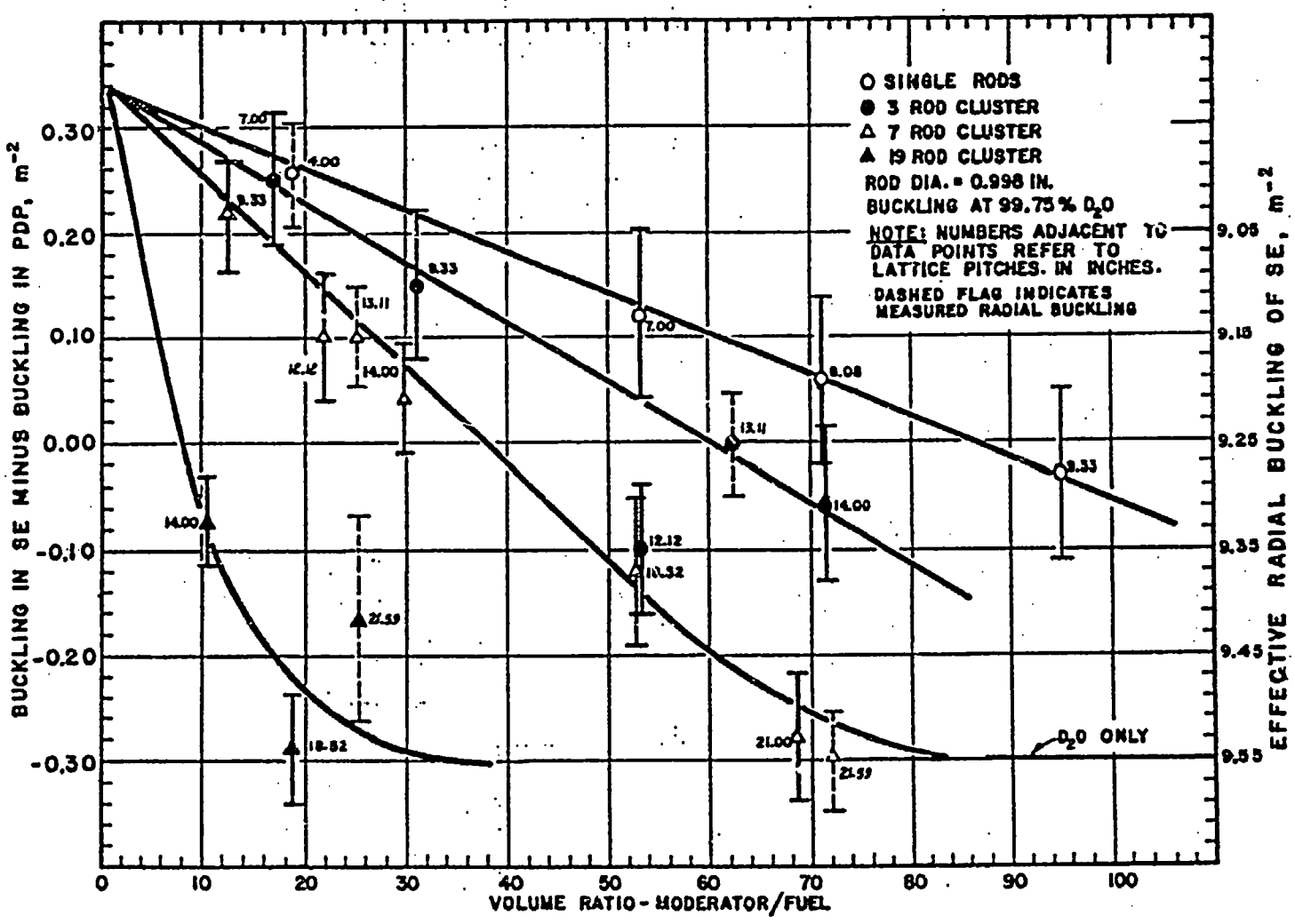


FIG. 2 EFFECT OF MODERATOR TO FUEL RATIO ON DIFFERENCES BETWEEN EXPONENTIAL AND CRITICAL BUCKLINGS FOR NATURAL U RODS IN $D_2O$

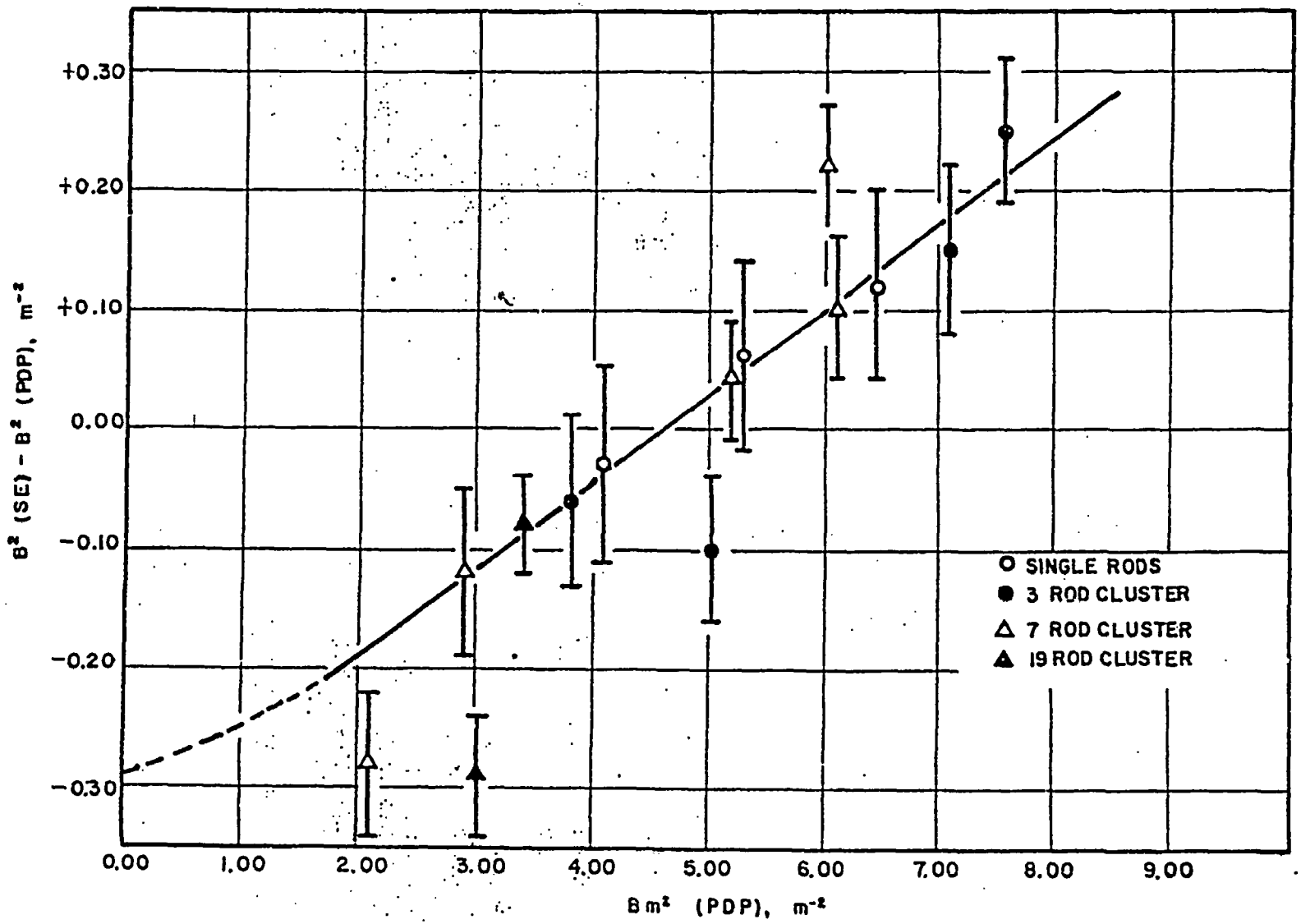


FIG. 3 EFFECT OF BUCKLING ON DIFFERENCES BETWEEN EXPOTENTIAL AND CRITICAL BUCKLING FOR NATURAL U RODS IN $D_2O$

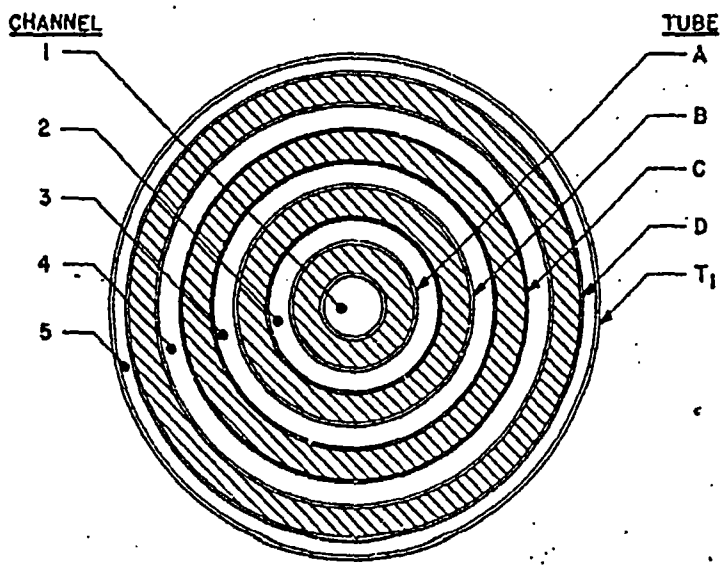


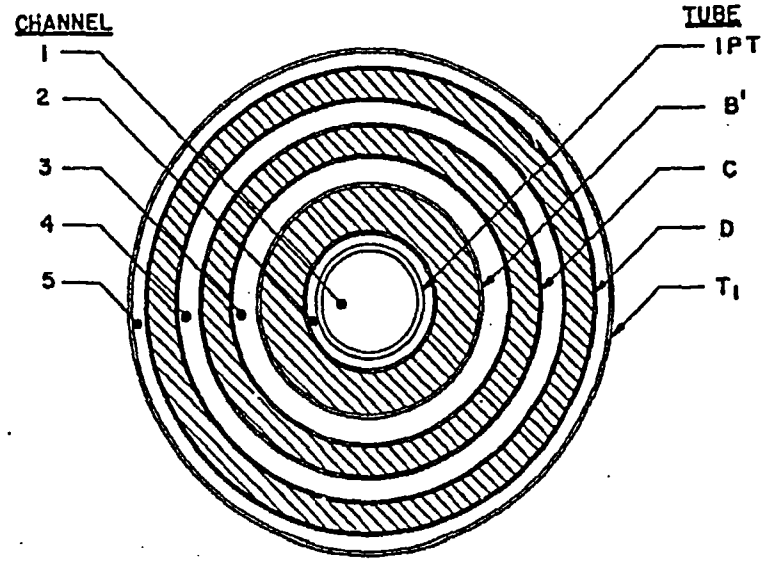


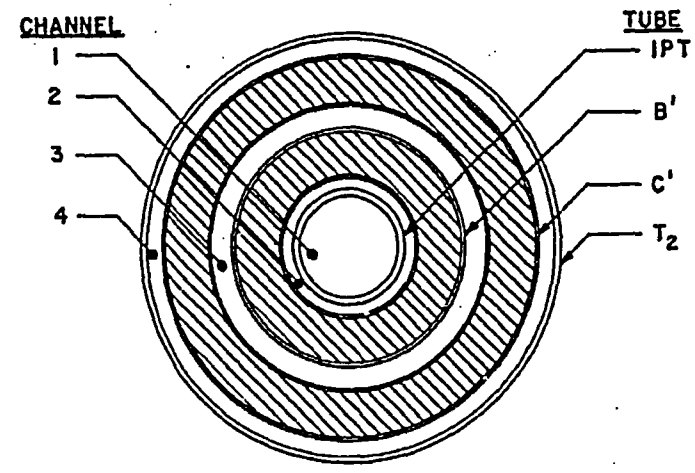


| TUBE | O.D. CLAD. (in.) | I.D. CLAD. (in.) | MATERIAL | DENSITY, g/cc |
|---|---|---|---|---|
| A | 1.12 | 0.50 | $UO_2$ | 8.896 |
| B | 2.10 | 1.48 | $UO_2$ | 8.849 |
| C | 3.08 | 2.46 | $UO_2$ | 8.872 |
| D | 4.06 | 3.44 | $UO_2$ | 8.904 |
| $T_1$ | 4.38 (O.D.) | 4.30 (I.D.) | 6061 AL | |
| IPT | 0.97 (O.D.) | 0.89 (I.D.) | 1100 AL | |
| B' | 2.10 | 1.18 | $UO_2$ | 8.928 |
| C' | 3.38 | 2.46 | $UO_2$ | 8.868 |
| $T_2$ | 3.70 (O.D.) | 3.62 (I.D.) | 6061 AL | |
| | | | | |

NOTE: ALL CLADDING – .030" THICK, 1100 AL
ABCD OXIDE – .250" THICK
B'C' OXIDE – .400" THICK

FIG. 4 CROSS SECTIONS OF $UO_2$ TUBE ASSEMBLIES

FIG. 5 CHANGE IN VERTICAL DIFFUSION COEFFICIENT ON VOIDING COOLANT CHANNELS IN $UO_2$ TUBE CLUSTERS

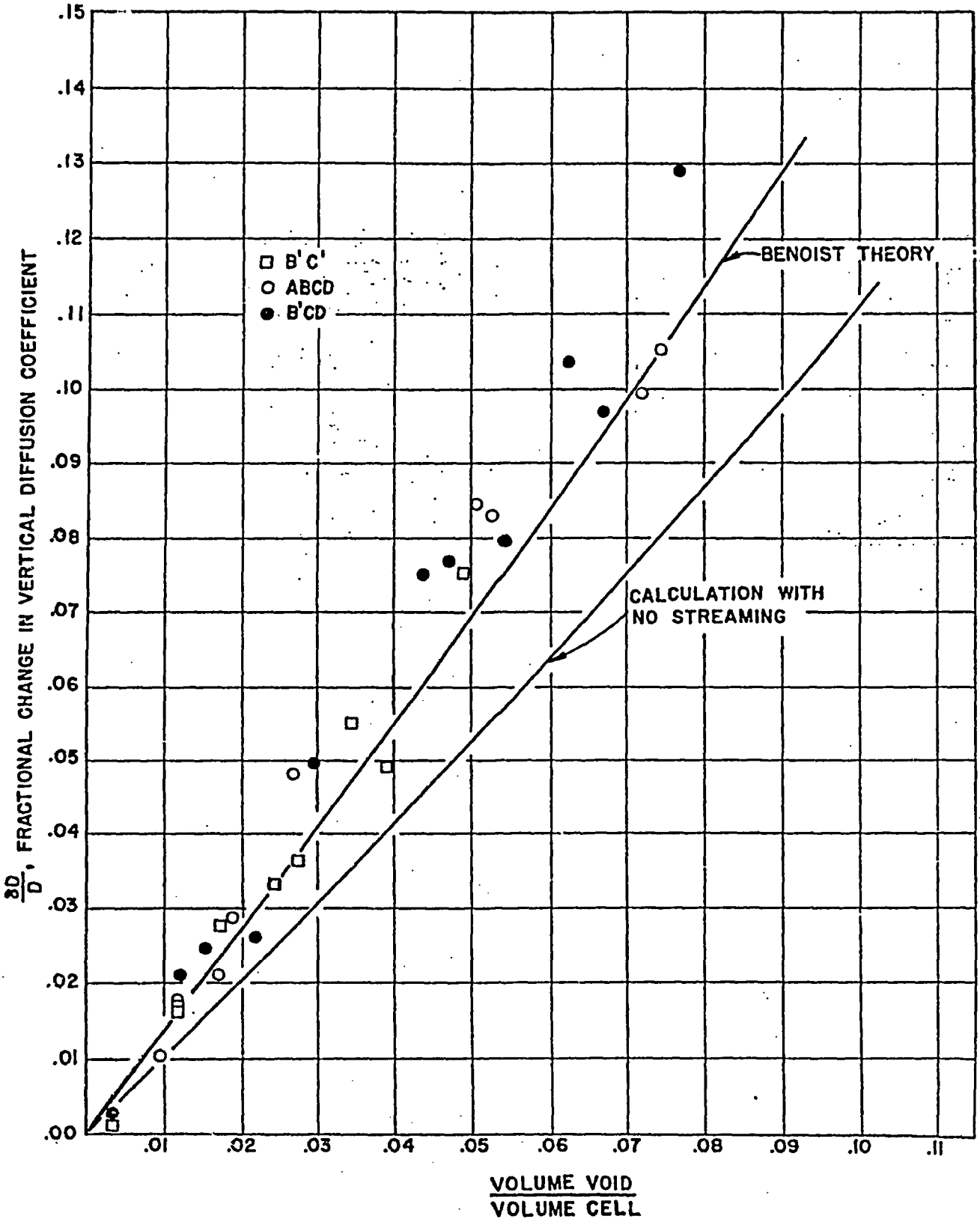

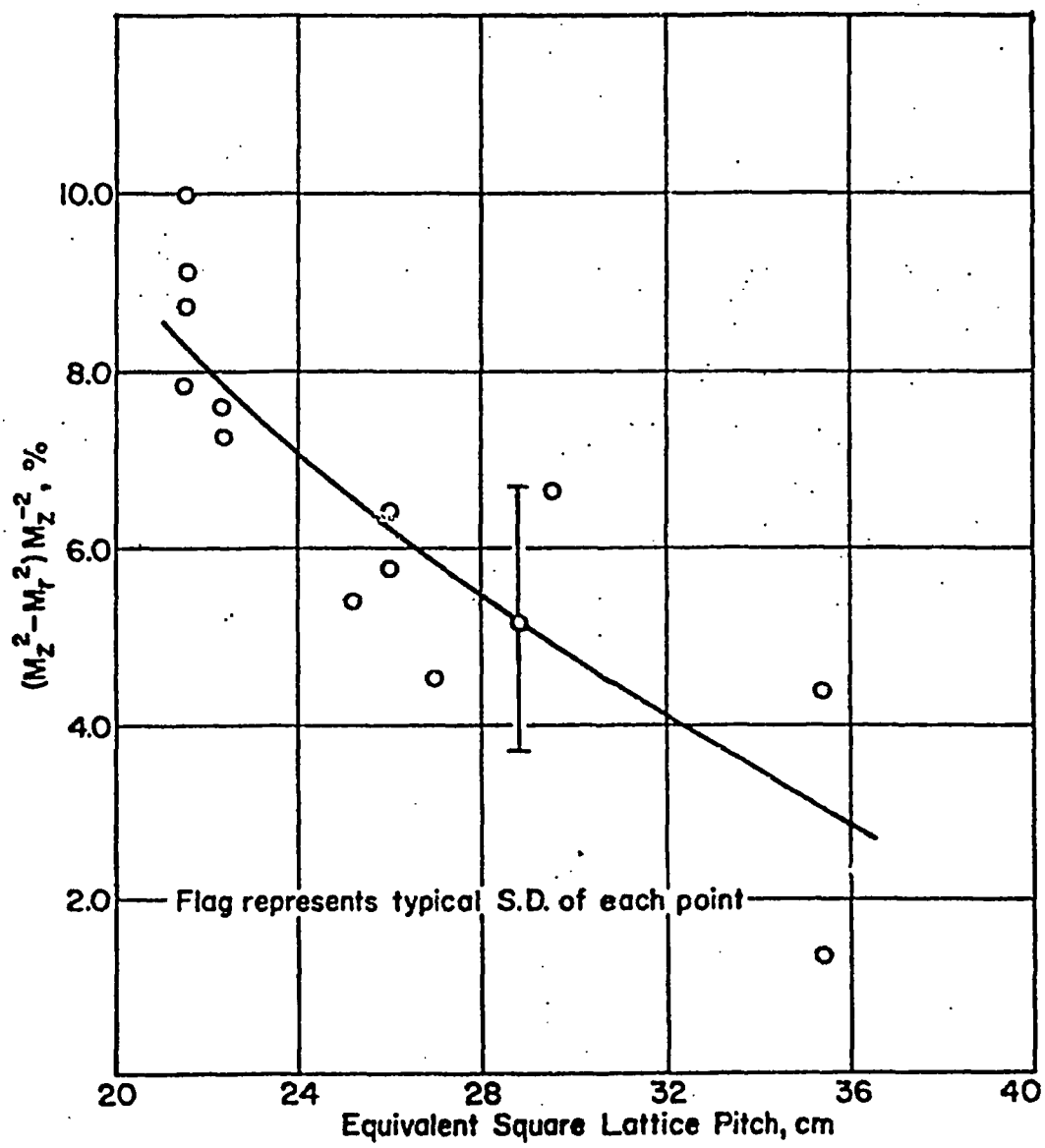


FIG.6 ANISOTROPY IN MIGRATION AREA
Air-filled Assemblies

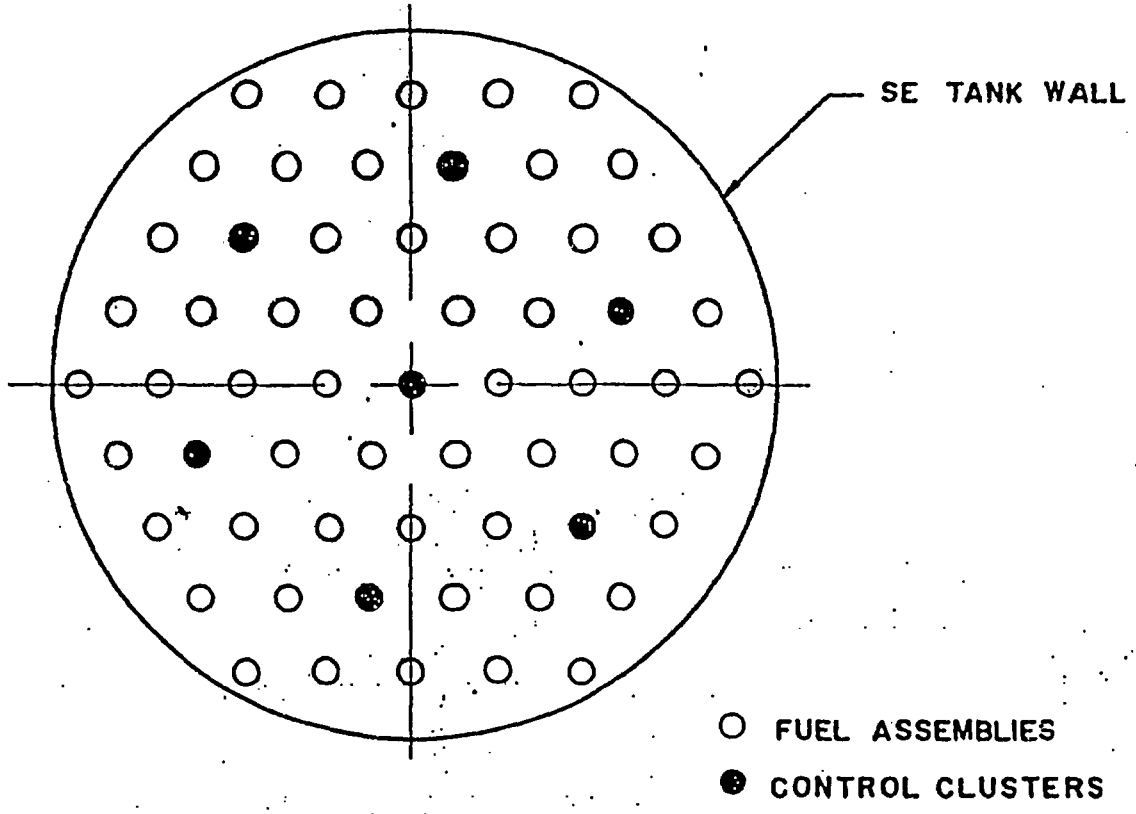


FIG. 7 LATTICE USED IN CONTROL ROD WORTH MEASUREMENTS IN THE SE

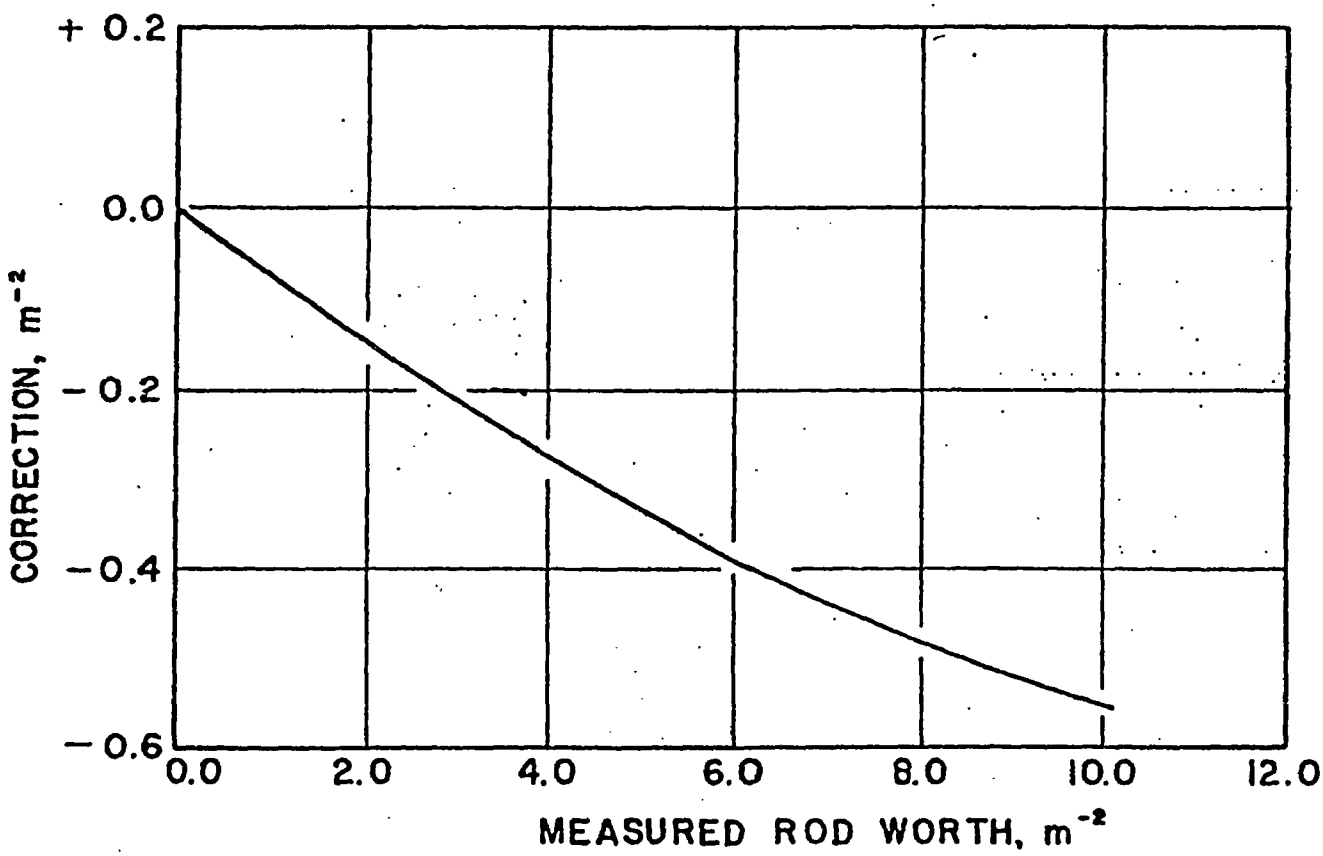


FIG. 8 CALCULATED CORRECTION TO RAW CONTROL ROD WORTHS MEASURED IN SE

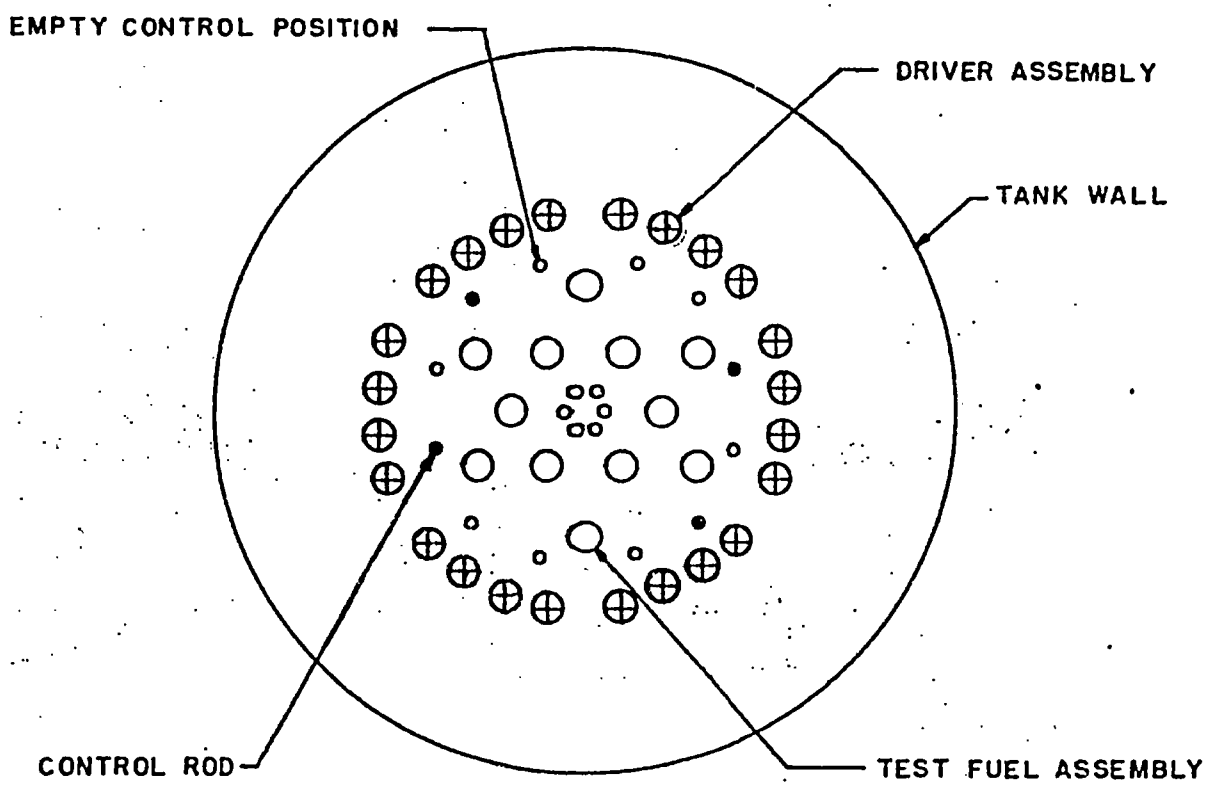


FIG. 9 HWCTR LATTICE

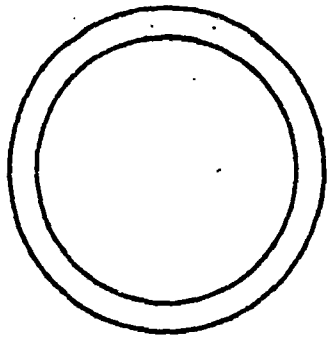

I.
NATURAL URANIUM METAL TUBE
DENSITY = 18.9 gm/cm$^3$
O.D. = 3.500 inch
I.D. = 2.860 inch

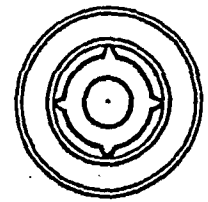

II.
CLAD URANIUM METAL TUBE
ENRICHMENT = 0.947 wt. % U-235
DENSITY = 18.9 gm/cm$^3$
CLADDING AND INNER SUPPORT TUBE MATERIAL = 1100 ALUMINUM
CLAD O.D. = 1.974 inch
CLAD I.D. = 1.166 inch
BARE FUEL O.D = 1.914 inch
BARE FUEL I.D. = 1.226 inch
SUPPORT TUBE O.D. = 0.832 inch
SUPPORT TUBE I.D = 0.532 inch
SUPPORT TUBE RIB D. = 1.146 inch

III
NATURAL URANIUM METAL ROD
DENSITY = 18.9 gm/cm$^3$
ROD O.D. = 0.998 inch
SHEATH MATERIAL = 1100 ALUMINUM
SHEATH O.D. = 1.090 inch
SHEATH I.D. = 1.026 inch
AIR BETWEEN SHEATH AND FUEL

IV
ENRICHED URANIUM-ALUM ALLOY ROD
ENRICHMENT > 90 % U-235
5.0 wt % U-235 in ALUMINUM
DENSITY = 2.82 gm/cm$^3$
ROD O.D. = 1.000 inch
SHEATH MATERIAL = 1100 ALUMINUM
SHEATH O.D. = 1.090 inch
SHEATH I.D. = 1.026 inch
AIR BETWEEN SHEATH AND FUEL

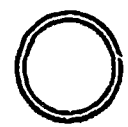

V
NATURAL LITHIUM-ALUM ALLOY ROD
LITHIUM IN ALUMINUM wt % = 4.9
DENSITY OF ALLOY = 2.35 gm/cm$^3$
ROD O.D. = 0.930 inch
CLADDING & SHEATH MATERIAL = 1100 ALUM.
CLADDING O.D. = 1.005 inch
CLADDING I.D. = 0.930 inch
SHEATH O.D. = 1.090 inch
SHEATH I.D. = 1.026 inch
AIR BETWEEN SHEATH & CLAD ROD

FIGURE 10 COMPONENTS USED IN MIXED LATTICE EXPERIMENTS

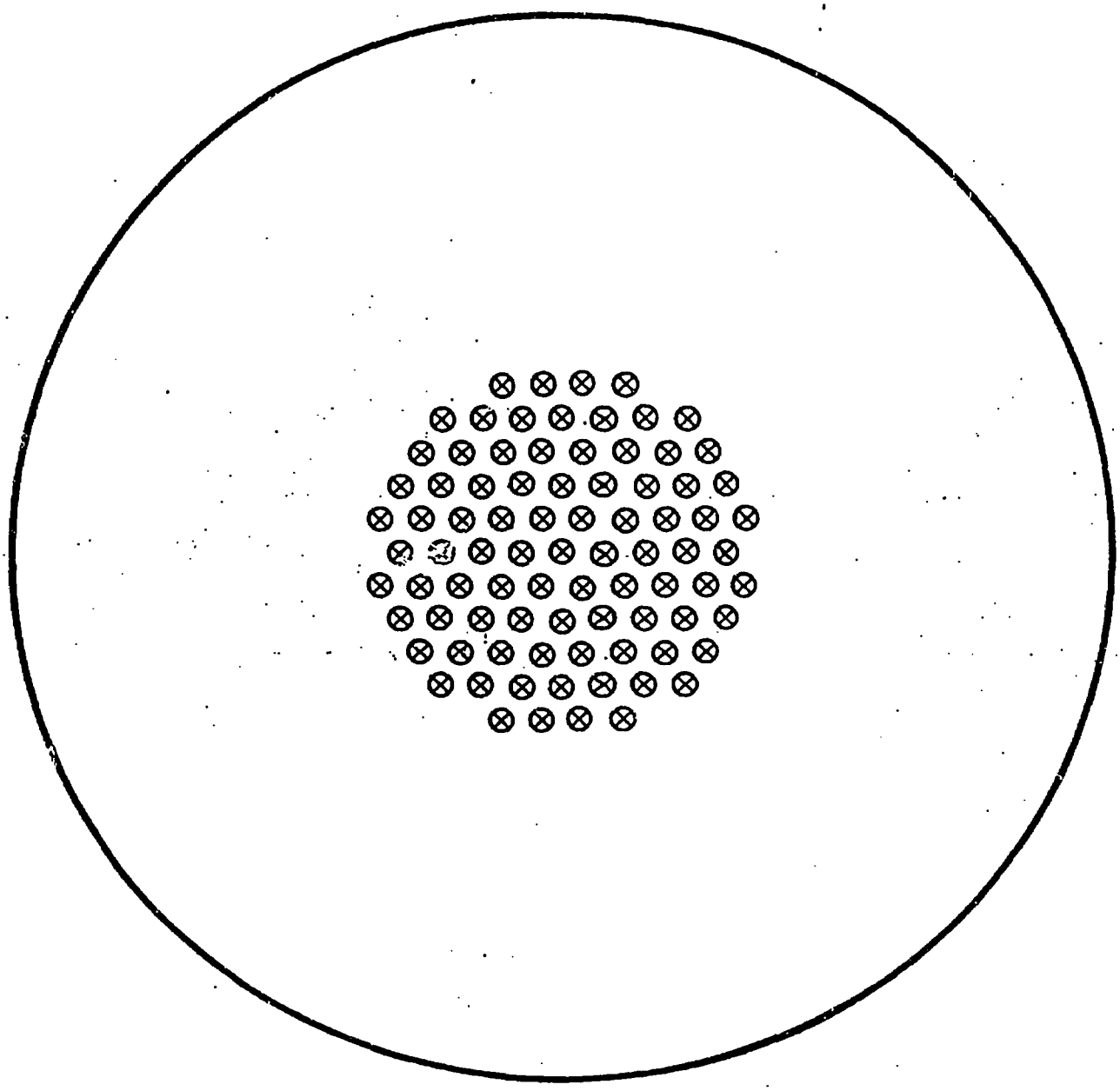

LEGEND

⊗ = III

SEE FIGURE 10

Figure II Pile Loading Number I

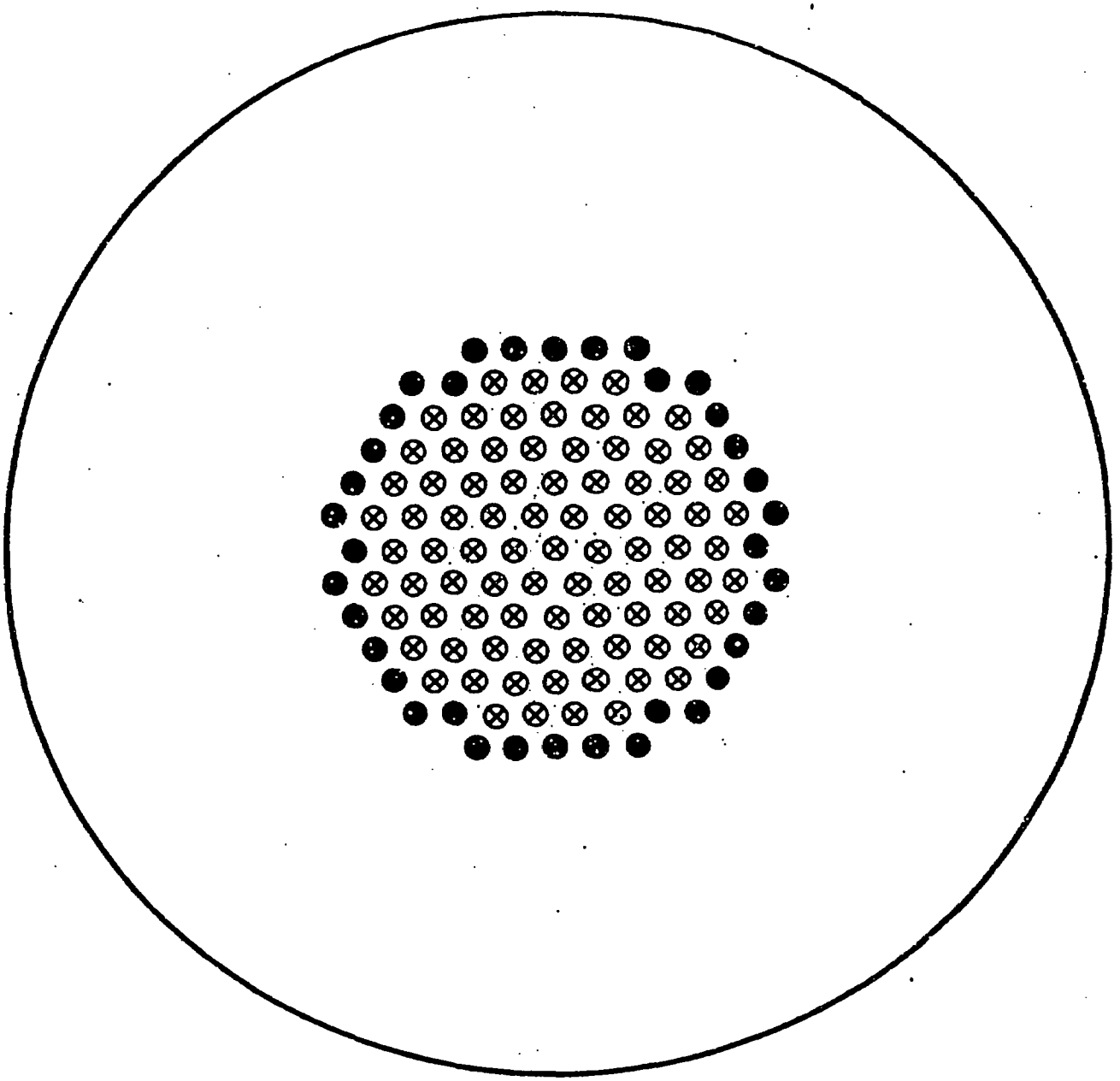

LEGEND

● = V

⊗ = III

SEE FIGURE 10

Figure 12 Pile Loading Number 2

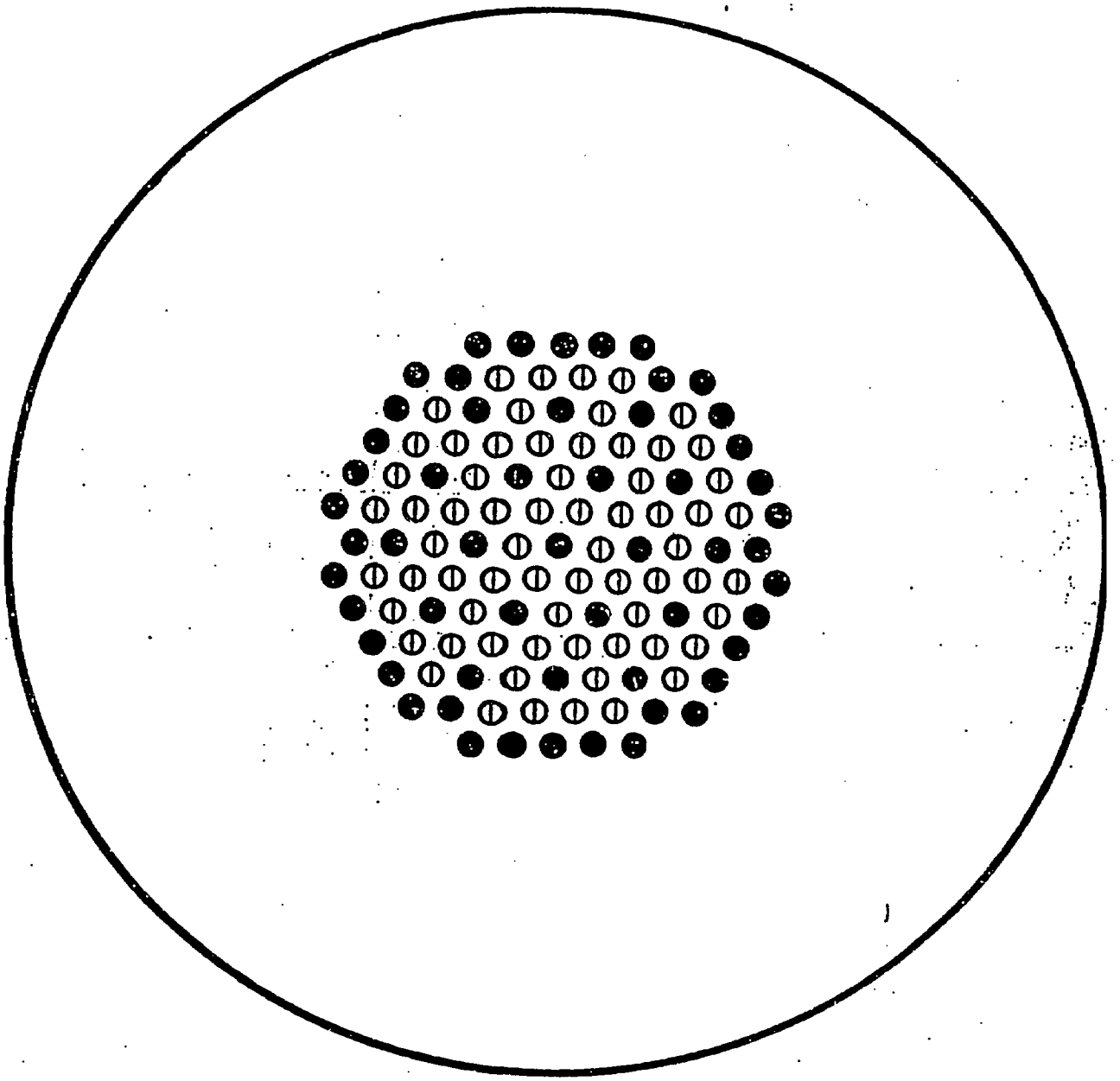

LEGEND

● = V

◐ = IV

SEE FIGURE 10

Figure 13 Pile Loading Number 3

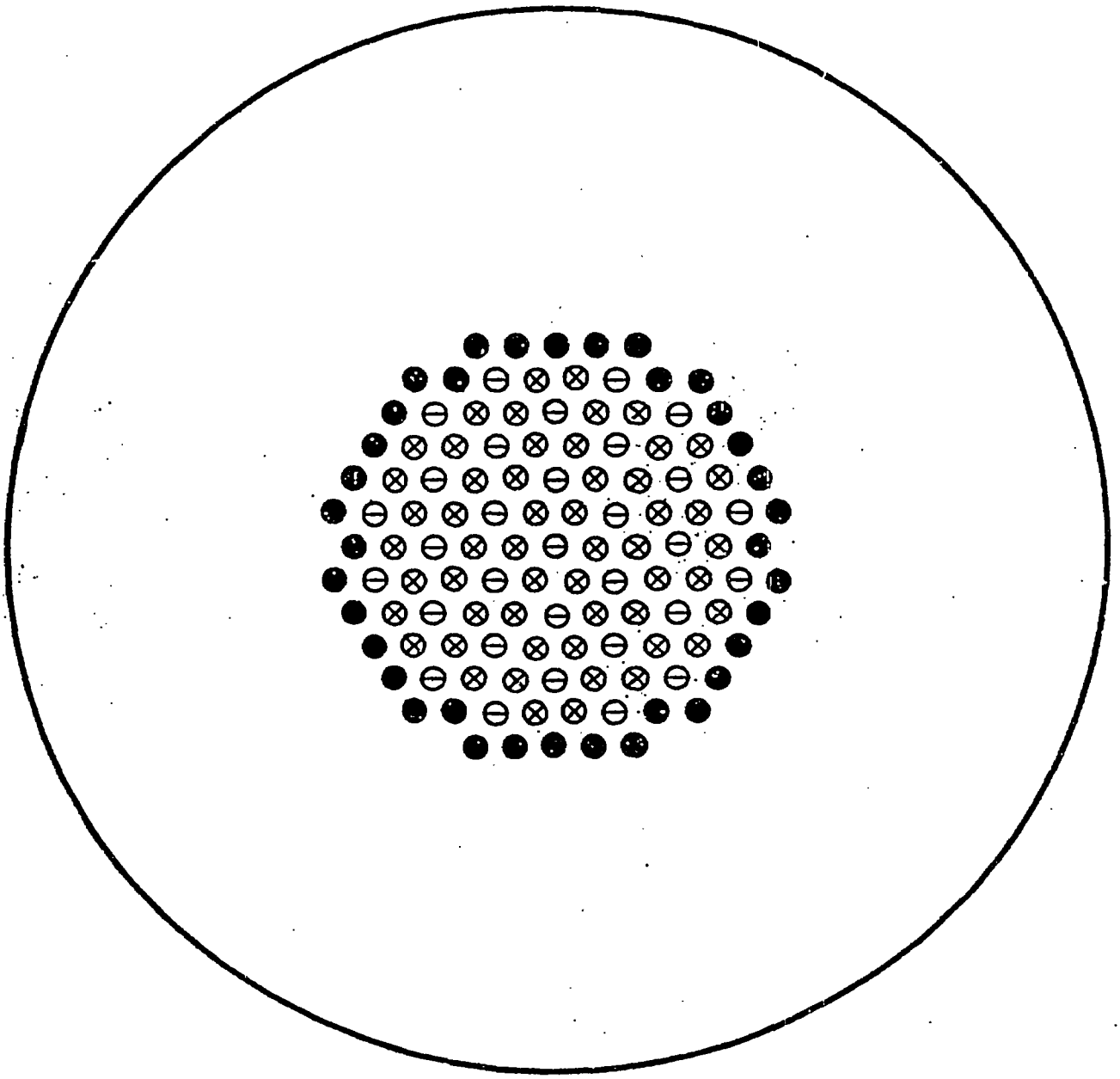

LEGEND

● = V

⊗ = III

⊖ = I

SEE FIGURE 10

Figure 14 Pile Loading Number 4

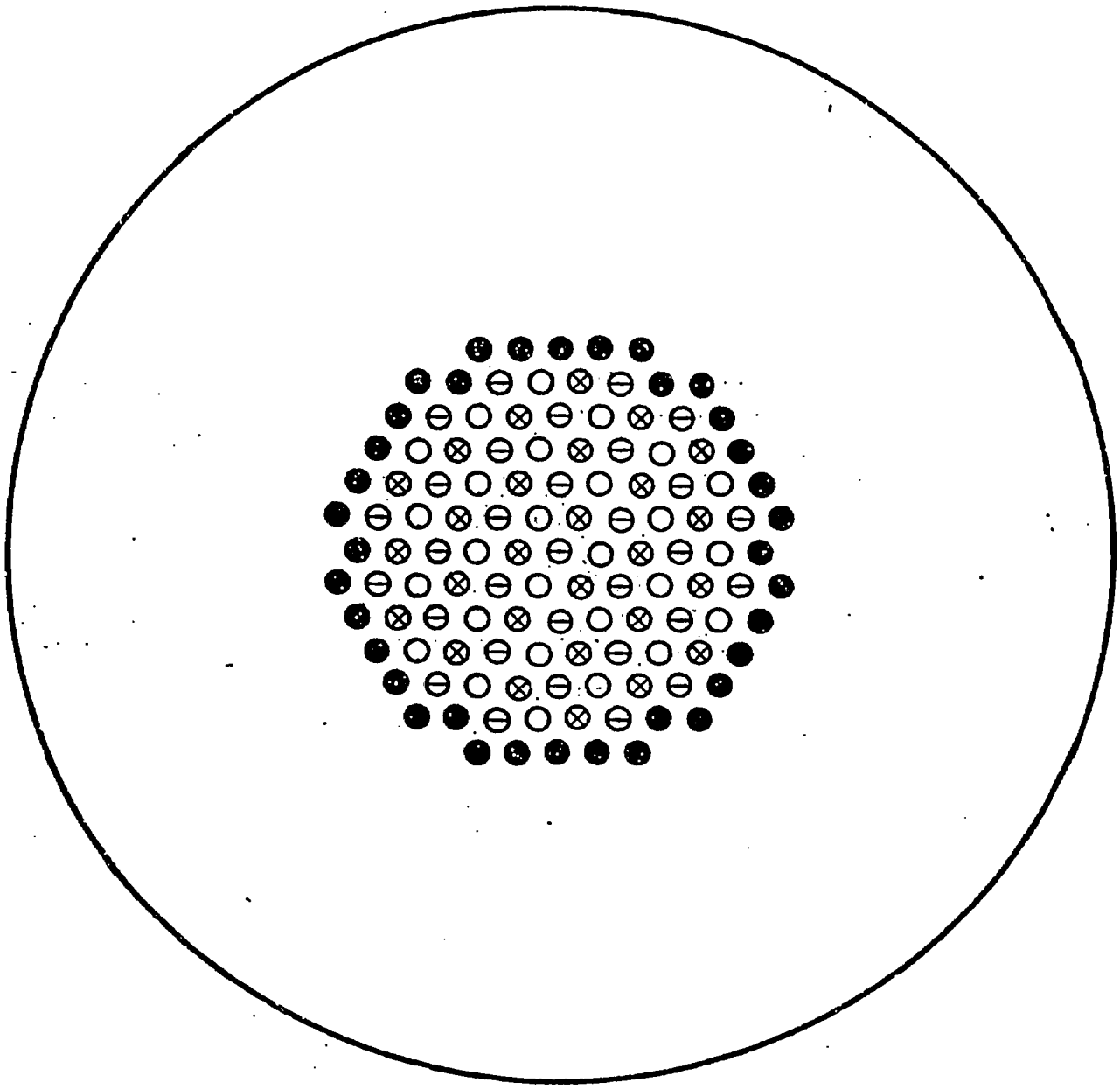

LEGEND

● = V
⊗ = III
○ = II
⊖ = I

SEE FIGURE 10

Figure 15 Pile Loading Number 5