FUGEN AND DCA
(F)

DESIGN STUDY OF
A COMMERCIAL FUGEN TYPE POWR REACTOR

PART II

A Preliminary Study

for

Reactor Structure, In-service Inspection
and Plant System

March 1976

Power Reactor and Nuclear Fuel
Development Corporation

This document is prepared only to provide the materials for technical dicussion on the commercial Fugen Project, and is not intended for publication. No public reference should be made to it without prior written consent of Power Reactor and Nuclear Fuel Development Corporation.

This study was done by Hitachi Ltd., and Power Reactor & Nuclear Fuel Development Corporation (PNC). The names of the persons who are mainly involved in this study are:

P N C	S. Sawai
	M. Akebi
	S. Hirayama
	S. Hattori
	T. Haga
	H. Nakagami
	S. Honda
	T. Kawada
	Y. Itami
	T. Komino
Hitachi Ltd.	H. Yamanouchi
	E. Shibata
	I. Oguchi
	T. Kishi
	K. Ogawa
	M. Suzuki
	T. Iwasaki
	M. Hirakawa

Contents

III. Plant System Principles of Emergency Core Cooling System

1. Introduction
2. Basic Requirements for the Safety Related System Design in Japan
3. System Design Bases for ECCS

I-1 PRELIMINARY STUDY FOR CONCEPTUAL DESIGN OF A CALANDRIA AND THERMAL SHIELDS FOR COMMERCIAL FUGEN TYPE REACTOR

1. INTRODUCTION

A preliminary design study of a 600 MWe class commercial Fugen type reactor is now proceeding, directed forward a future national project in Japan. In the case of the design of large scale reactors, one of the major concerns is to minimize the sizes of reactor components such as the calandria and the thermal shields in order to facilitate manufacture, transport and installation of these components. The component dimensions are basically determined from the sizes of the reactor core and the radiation shieldings.

Another concern is to avoid a large amount of the site work. In the case of the Fugen reactor, a considerable amount of work, such as the welding of the thermal shield sleeves and the rolled jointing of the calandria tubes had to be carried out at the site. Therefore, it should be designed for the commercial reactor that these tasks should be completed at the factory in order to reduce the time required for installation period and to improve quality.

In addition, with large core diameters, structual instabilities, under which the reactor compound structure must withstand any kind of load, would be increased especially in the case of vertical type reactors. Therefore, it is necessary to confirm the integrity of the reactor structure which should be able to withstand all kind of load.

This paper gives the outline of the structure design of the calandria and the thermal shields in consideration of the above criteria.

2. CALANDRIA AND THERMAL SHIELDS

2.1 GENERAL

The calandria and the thermal shields which surround the calandria form the basis of the core structure. In this study, the following basic specifications and assumptions are provided for:

(1) The reactor is oriented vertically.

(2) The number of pressure tube assemblies is 428.

(3) Refuelling is from the upper end only.

(4) There is no dump annulas of a moderator within the calandria.

(5) The square lattice pitch is assumed to be 280mm or 300mm.

(6) 34 in-core flux monitors are located at the center of the ligament.

(7) 4 in-core reactivity control mechanism components are located on the square lattice.

(8) The height of the thermal shields is assumed to be proportional to the core height of the Fugen reactor.

2.2 CALANDRIA

The calandria, which contains the heavy water moderator, and the reflector, mainly consists of a vertical, cylindrical, austenitic stainless steel tank and 428 zirconium alloy calandria tubes as illustrated in Figure 1. The calandria tank contains two radially disposed zones. The central zone contains the calandria tubes and the heavy water moderator. The central zone is surrounded by the second zone which contains only heavy water. No physical boundary separates these two zones. The calandria tubes are joined to the calandria tube sheets. This joint is of the sandwich type, the same as that employed in the Fugen reactor.

The calandria tank diameter is determined so as to add 24 inch diameter manhole pipes, which are connected to the upper calandria tank tube sheet, to the core diameter. The height of it is also determined to add the thicknesses of the axial reflectors and some internals to the core height.

A heavy water distribution plate is placed immediately below the upper tube sheet to cool the upper tube sheet, the calandria tubes and the calandria tank shell.

The calandria is supported by the lower thermal shield. This method of support was chosen so that the weight of the heavy water could be transferred directly to the lower thermal shield, through the calandria tank's lower tube sheet. The support rings are set up on the upper tube sheet of the lower thermal shield on each square lattice. Each of twelve equally spaced lugs is attached to the top and bottom of the calandria tank shell to transfer the seismic load applied to the calandria to the concrete biological shield through the thermal shields.

The calandria tube rolled joints can be carried out at the factory, because the thermal shield sleeves are not connected to the calandria tank tube sheets, as described in Section 2.3.

2.3 THERMAL SHIELDS

The thermal shield, which consists of the upper, radial and lower vessels, is an open type vertically oriented right cylinder of carbon steel and completely surrounds the calandria, as illustrated in Figure 1. The thermal shield slabs of carbon steel are contained in the central portion of the upper and lower thermal shields. Steel shots are used for the thermal shielding in the radial shield and in the annular portion of the upper and lower thermal shields. The upper and lower thermal shield sleeves of carbon steel are welded to the upper and lower tube sheets of each thermal shield.

The diameter of the thermal shield is determined so as to add the gap between the calandria tank shell and the radial thermal shield to the thickness of the radial thermal shielding.

The pressure tube assemblies are supported by the upper thermal shield sleeves. The axial stiffness of the upper thermal shield is provided by the upper and lower tube sheets and the upper thermal shield sleeves. In combination, these components form a "pancake" beam structure. This assembly support its own weight and the pressure tube assemblies. These loads are transferred by the radial thermal shield to the upper tube sheet of the lower thermal shield. The calandria is also supported by the upper tube sheet of the lower thermal shield, as described in Section 2.2. All of these loads including the weight of the lower thermal shield are supported by the support structure embedded in the concrete base, as in the Fugen reactor.

The lugs, which transfer the seismic loads applied to the calandria and thermal shields to the concrete biological shield, are attached as shown in Figure 1.

The thermal shield sleeves can be welded to the thermal shield tube sheets at the factory, because they are not connected to the calandria tank tube sheet.

2.4 STRUCTURAL IMPROVEMENTS FROM THE FUGEN REACTOR

In this study, some improvements in structure over the Fugen reactor are carried out as follows:

(1) The calandria tube rolled joints and welding of the thermal shield sleeves can be done at the factory.

(2) There are no dump annulus in the calandria since the reactor has no fast dump of the moderator.

(3) Steel shots are used for the thermal shielding in the radial thermal shield and in the annular portions of the upper and lower thermal shields, in consideration of ease of manufacture, transportation and installation.

(4) Vibration absorber lugs are attached to the calandria tank shell and the thermal shield shells.

(5) Thermal insulation plates are set up immediately outside the upper and lower thermal shield tube sheets in order to avoid any increase of temperature of these tube sheets due to heat transfer from the primary coolant.

3. CONCLUSION

The structure of the calandria and the thermal shields is basically established considering ease of manufacture, installation and maintenance, although some minor changes will be needed in accordance with further considerations.

Further investigations and developments required are as follows:

(1) Calandria tube rolled joints should be manufactured for trials in order to establish the optimum dimensions and to ensure mechanical and endurance properties.

(2) To eliminate excessive moderator heating, some internals such as headers and distribution tubes have to be set up in the calandria. Therefore, flow patterns and temperature distributions should be established by using a model of the calandria.

(3) Seismic analysis should be carried out for the reactor structure.

(4) As a result of the design study, it was found that the CO_2 gas system can not detect leaking tubes because the thermal shield sleeves are not connected to the calandria tank tube plates. Therefore, a method which can detect leaking tubes should be considered.

4. TECHNICAL PROBLEMS

(1) For large scale reactors especially in the case of vertical oriented

reactors, it is difficult to support the total weight of the reactor structure. In the case of the Fugen reactor, the total weight was supported by the support structure embedded in the concrete base which was under the lower thermal shield. This is also adopted for this commercial reactor. It was supported by radial cantilever beams weled at the upper thermal shield shell for CANDU-BLW-250 Gentilly. A similar method was adopted for the Winfrith SGHWR.

(2) The calandria tubes of the Fugen reactor were designed to be an internal part of the calandria pressure boundary, because of our Code or Control Board requirements.

The calandria tubes of CANDU-BLW-250, Gentilly were designed as internal baffles within the calandria tank.

(3) In contrast with the reactor structure of the Fugen reactor, the calandria and the thermal shields of the commercial reactor are not connected to the thermal shield sleeves. Therefore, the CO_2 gas leak detecting system can not detect the leaking tube or tubes.

I-2 PRELIMINARY STUDY FOR CONCEPTIONAL DESIGN OF PRESSURE TUBE ASSEMBLIES FOR A COMMERCIAL FUGEN TYPE REACTOR

1. INTRODUCTION

The pressure tube assemblies are the most important components of the reactor structure. The function of the 428 pressure tube assemblies is to contain the reactor fuel and coolant within the reactor core.

In this design study, it has been specified that the reactor is oriented vertically and that the off-power refuelling is done from the upper end only. These differences cause some structural variations from that of the Fugen reactor.

The pressure tube assemblies should also be designed in consideration of the need for ease of manufacture and installation.

This paper describes the outline of the pressure tube assembly based on experiences with the Fugen reactor in addition to the above items.

2. ENGINEERING DESIGN

2.1 GENERAL

Each pressure tube assembly consists of a zirconium-niobium alloy pressure tube connected at both ends to the martensitic stainless steel parts of the extension tubes by means of "sandwich" type rolled joints as shown in Figure 1. Each assembly is completely shop assembled to maintain quality level and to facilitate installation. Each assembly is installed in the lattice positions from the top end of the reactor and is supported by a bolted connection to the upper thermal shield. Each assembly is connected by weld joints to each inlet and outlet feeder of the primary circuit at the site, and the top of the assembly is closed with a seal plug and an auxiliary seal flange.

No radical change from the design and manufacturing procedures used for the Fugen reactor is envisaged in this design study, but some changes or improvements from the Fugen reactor are carried out in order to facilitate manufacture and installation.

2.2 STRUCTURE

The size of the pressure tube assembly is basically determined so as to be proportionate to the ratio of the inside diameter of the Fugen

pressure tube (117.8 mm) compared to that of this pressure tube (129.8 mm); except for the length, which is determined by the height of the calandria and the thermal shields.

Some design features of the pressure tube assemblies are outlined as follows:

(1) Considering ease of replacement of pressure tube assemblies, the length of the upper extention tube between the upper end and the support flange is required to be as short as possible in order to gain easy access to the support area. Therefore, a single seal plug, which has the functions of both sealing the primary coolant and supporting the fuel assembly and upper shield plug is adopted together with a back-up seal flange for safety. The seal plug contains a metal seal element only.

(2) The outlet nozzles of all pressure tube assemblies are located at the same position in order to promote simplification and standardization of the manufacture and installation of the pressure tube assemblies, and in order to ensure interchangeability.

(3) Round-locks are set up near the upper and in the lower support assemblies so as not to transfer torsional moments from the feeder pipes to the central region of the pressure tube assemblies.

(4) Metallic O rings and bellows are provided for the sealing of CO_2 gas at the upper and lower support assemblies respectively.

(5) The rolled joints are located outside the calandria tank tube sheets to reduce the irradiation effect.

(6) The thickness of the dissimilar metal weld near the upper rolled joint is reduced to decrease thermal stress and to improve weldability.

(7) A vibration absorber plate is set up at the top of the assembly.

2.3 PRESSURE TUBE MATERIAL

Zirconium alloys have been used as pressure tube materials because these materials have substantially a good neutron economy, high tensile strength and high corrosion resistance.

Considering the information from Canada and the UK, and experimental results in Japan, the most suitable materials for these alloys is proposed for this reactor as described below:

Table 1 shows the design data of heat-treated zirconium-2.5 wt % niobium (HT Zr-Nb), cold-worked zirconium-2.5 wt % niobium (CW Zr-Nb) and cold-worked zircaloy-2 (CW Zry-2). The allowable stresses are determined by using a similar method as that used for the Fugen reactor design.

HT Zr-Nb is proposed for the pressure tube material as follows:

(1) The use of HT Zr-Nb permits the thinnest-walled pressure tube.

(2) The predicted creep strain for a 30 years life is not more than the strain limit under the same operating conditions as those of the Fugen reactor.

(3) Hydrogen and irradiation embrittlement will not limit the useful life of this pressure tube under the same operating conditions as those of the Fugen reactor.

(4) HT Zr-Nb was used for the Fugen pressure tubes.

2.4 STRUCTURAL IMPROVEMENTS FROM THE FUGEN REACTOR

In this design study, some improvements in structure to the Fugen reactor design were carried out as follows:

(1) The outlet nozzles of all pressure tube assemblies are located at the same position as described in Section 2.2, while the inlet nozzles corresponding to the outlet nozzles of the commercial reactor are located at eight different positions for the Fugen reactor.

(2) For the Fugen reactor, soft packings were used for sealing CO_2 gas in the upper and lower support assemblies. To improve the reliability of sealing, metallic O rings and bellows are used for the commercial reactor as described in Section 2.2.

(3) Thermal insulation blocks are set up at the upper and lower support assemblies in order to thermally insulate it from the cold thermal shields.

(4) For the Fugen reactor, two plugs were provided at the bottom end of each assembly. One was used for supporting a fuel assembly and a lower shield plug. The other was used for sealing the primary coolant and consisted of organic and metallic seals. A plug which has both functions mentioned above, is used for the commercial reactor as described in Section 2.2.

(5) The round-locks are set up near the upper and in the lower support assemblies as described in Section 2.2.

(6) The vibration absorber plate is set up at the top end of the assembly as described in Section 2.2.

3. CONCLUSION

The configuration of the pressure tube assemblies is basically established in consideration of ease of manufacture, installation and maintenance, although some minor changes will be made in accordance with further considerations.

Further investigations and developments required are as follows.

(1) For HT Zr-Nb pressure tube material, long-term data on creep, corrosion, unstable fracture and so on under reactor environmental conditions should be attained.

(2) Pressure tube rolled joints should be manufactured for trial in order to establish optimum dimensions and to ensure their mechanical and endurance properties.

(3) Corrosion behaviour of carbon steel used for extension tubes should be investigated in relation to primary coolant chemistry.

(4) The design of the seal plug should be developed with R & D.

4. TECHNICAL PROBLEMS

4.1 PRESSURE TUBE MATERIAL

(1) In the case of HT Zr-Nb, the in-core creep rate is the most important factor to limit the life of a pressure tube. Therefore, although the equation has been used to obtain the strain figure at the end of the reactor life, it should be revised in accordance with the latest in-core creep test results.

(2) In this study, although HT Zr-Nb is proposed for the pressure tube material, further consideration has to be given to select the best pressure tube material. Information on CW Zr-Nb is little in comparison with that of other alloys, so knowledge should be gathered to provide the basis of further consideration for selection of the material.

4.2 STRUCTURE

(1) Rolled joint techniques have been established for the Fugen pressure tubes. Since the inside diameters of the pressure tubes are increased in this design study, a large numbers of trial manufactures will have to be carried out. From the standpoint of structural design, it seems unlikely that such changes will be made.

(2) For the Fugen reactor, the seal plug was set at the bottom end of the pressure tube assembly, so that the sealing was made for water only and that the seal element was maintain at a low temperature in comparison with other parts which were in contact with the primary coolant.

Because the seal plug is set at the top end of the assembly, the sealing has to be made for the high temperature of steam. In addition, in considering ease of replacement of the assembly, the sealing is made of a metal element only.

Thus, in order to assure the sealing capacity of the seal plug, a considerable amount of R & D is still required.

I-3 PRELIMINARY STUDY FOR CONCEPTUAL DESIGN ON CORE LATTICE PITCH FOR A COMMERCIAL FUGEN TYPE REACTOR

1. INTRODUCTION

For pressure tube type reactors, lattice pitch is the most basic and most important parameter both for structure and nuclear design. From the standpoint of structure design, the major dimensions of reactor components are directly determined by the lattice pitch.

In the case of Fugen, it was very difficult to weld the thermal shield sleeves to the thermal shield tube sheet and to inspect the welds due to the narrow lattice pitch (240 mm). This caused delay in the installation schedule.

For commercial reactors, lattice pitch should be determined in consideration of the manufacture and installation experience with Fugen.

In this paper, the required lattice pitch is considered in view of the manufacture, installation and maintenance of the reactor components.

2. LATTICE PITCH

2.1 GENERAL

The following premises are adopted to ensure reliability as a reactor structure and to enable repair and/or replacement of components.

(1) The manufacture and installation of the reactor components, such as pressure tube assemblies, the calandria and the thermal shields, can be carried out in accordance with quality control requirements.

(2) If components, such as pressure tube assemblies, inlet and outlet feeders, and calandria tubes, should be required to repair or to replace them, the access up to the place where operations would be done could be possible.

(3) Pressure tube rolled joints are located outside the calandria tank tube sheets in order to avoid excessive dosage.

(4) Dimensions of the pressure tube assemblies are the same as those set out in another paper.*

---

* Presented at the same meeting

2.2 REQUIRED LATTICE PITCH

The required lattice pitch is different for each part of the components. The results considered are shown in Table 1.

3. CONCLUSION

As shown in Table 1, the required lattice pitch for each case is summarized as follows:

(1) In the case that a pressure tube assembly is replaced and that a outlet feeder of the replaced assembly is cut out the require lattice pitch is 340 - 350 mm.

(2) In the case that a pressure tube assembly is replaced and that all outlet feeders belonging to the same row of the replaced assembly, the required lattice pitch is 310 mm.

(3) In the case that the thermal shield tube sheet/the thermal shield sleeve weld and the thermal shield tube steel/the in-core monitor guide tube bellow weld is inspected by magnetic particle examination, in accordance with the requirements of the MITI Technical Standard, the required lattice pitch is 310 mm.

(4) In the case that the same welds mentioned above are inspected by liquid penetrant examination which is the same inspection performed for the Fugen reactor, the required lattice pitch is 280 - 300 mm, where the welds are overlapped as in the case of 280 mm.

4. TECHNICAL PROBLEMS

From the standpoint of structure design, the lattice pitch is necessarily bigger.

On the other hand, the requirement of nuclear design is the opposite.

The minimum lattice pitch from the results of this study (step 1) is 280 mm, and the nuclear design study carried out simultaneously, required a lattice pitch of 265 mm.

The adjustment of this difference has to be made at the beginning of the conceptional design (step 2 in the design study).

I-4 PRELIMINARY STUDY FOR CONCEPTUAL DESIGN OF INLET AND OUTLET FEEDERS FOR COMMERCIAL FUGEN TYPE REACTOR

1. INTRODUCTION

In the case of large scale reactors, a large number of inlet and outlet feeders are set up around the reactor core. This causes complexity and difficulty of installation, inspection and maintenance. Therefore, in order to avoid such complexity and difficulty, sub-headers should be provided between the pressure tube assemblies, and the steam drums and inlet headers.

In addition, the selection of the material to be used for the feeders is also important. Austenitic stainless steel was used as the material of the feeders of the Fugen reactor. Recently, its corrosion behavior under the specific conditions has become a subject of discussion and an investigation has been under way. Therefore, the selection of the most suitable material, in consideration of information from other reactors, should be required.

In this paper, a preliminary design study of the feeders for a commercial Fugen type reactor is carried out to discover a suitable feeders arrangement and to review the materials used for the feeders.

2. FEEDER ARRANGEMENT

2.1 GENERAL

In considering the feeders arrangement, the following items are provided for:

(1) The sizes of the inlet and outlet feeders are 2 and 3 inches respectively.

(2) The sub-headers are set up between the pressure tube assemblies and the steam drums and inlet headers.

(3) The lattice pitch is 300 mm.

(4) The concrete biological shield is the same configuration as that of the Fugen reactor and its dimensions are shown in another paper.*

---

* "PRELIMINARY STUDY FOR CONCEPTUAL DESIGN OF CALANDRIA AND THERMAL SHIELD FOR COMMERCIAL FUGEN TYPE REACTOR", Presented at same meeting.

As for the proposed arrangement of the inlet feeders, their similarity in a quadrant is not possible because the control rod drive mechanisms are located on a square lattice and are located beneath the core as illustrated in Figure 1-3.

3. MATERIALS

Austenitic stainless steel has been used as the material of the primary circuits of conventional light water reactors, and also for the Fugen reactor. However, this material used for the primary circuits has recently become a subject of discussion due to its corrosion behaviour under specific conditions.

Therefore, the possibility of the use of carbon steel as the material of the primary circuits of a commercial Fugen type reactor should be considered, in careful consideration of water chemistry involved.

The most important factor which influences the carbon steel primary circuits is water chemistry directly related to general corrosion. On the basis of the experience and information from other boiling water reactors, the use of carbon steel for primary circuits is briefly reviewed in comparison with stainless steel, as summarized in Table 1. In addition, the material and water chemistry of the primary circuits of CANDU-BLW-250, Gentilly and Winfrith SGHWR are shown in Table 2.

4. CONCLUSION

4.1 FEEDERS ARRANGEMENT

A suitable arrangement of both inlet and outlet feeders is proposed in consideration of the evaluation described in Section 2.2. However, since there are some undecided questions and conditions, such as the layout and the size of all components in the pressure containment vessel, space for supports and insulation of the feeders and so on, the proposed arrangements should be subjected to continuous review.

4.2 MATERIALS

In this preliminary study, carbon steel is proposed as the material for the primary circuits for a commercial Fugen type reactor. In future, an effort should be made toward the investigation by experiments of confirming the suitable water chemistry conditions and its control.

As for the proposed arrangement of the inlet feeders, their similarity in a quadrant is not possible because the control rod drive mechanisms are located on a square lattice and are located beneath the core as illustrated in Figure 1-3.

3. MATERIALS

Austenitic stainless steel has been used as the material of the primary circuits of conventional light water reactors, and also for the Fugen reactor. However, this material used for the primary circuits has recently become a subject of discussion due to its corrosion behaviour under specific conditions.

Therefore, the possibility of the use of carbon steel as the material of the primary circuits of a commercial Fugen type reactor should be considered, in careful consideration of water chemistry involved.

The most important factor which influences the carbon steel primary circuits is water chemistry directly related to general corrosion. On the basis of the experience and information from other boiling water reactors, the use of carbon steel for primary circuits is briefly reviewed in comparison with stainless steel, as summarized in Table 1. In addition, the material and water chemistry of the primary circuits of CANDU-BLW-250, Gentilly and Winfrith SGHWR are shown in Table 2.

4. CONCLUSION

4.1 FEEDERS ARRANGEMENT

A suitable arrangement of both inlet and outlet feeders is proposed in consideration of the evaluation described in Section 2.2. However, since there are some undecided questions and conditions, such as the layout and the size of all components in the pressure containment vessel, space for supports and insulation of the feeders and so on, the proposed arrangements should be subjected to continuous review.

4.2 MATERIALS

In this preliminary study, carbon steel is proposed as the material for the primary circuits for a commercial Fugen type reactor. In future, an effort should be made toward the investigation by experiments of confirming the suitable water chemistry conditions and its control.

Table 1 Comparisons of Carbon Steel and Stainless Steel as Primary Circuit Materials

Problems	Influence on Materials		Countermeasures and Comments
	Carbon Steel	Stainless Steel	

Table 2

Material and Coolant Chemistry of the Primary Circuit of CANDU-BLW-250, Gentilly and SGHWR Winfrith

Table 2

Material and Coolant Chemistry of the Primary Circuit of CANDU-BLW-250, Gentilly and SGHWR, Winfrith

	CANDU-BLW-250, Gentilly*	SGHWR, Winfrith**
Material		
P.T. Ext. Tube	AISI 403 Mod. (SUS403 Mod.) ASTM A210 GR.A1 (STB 30)	12% chrome/stainless iron, (SUS 410)
Inlet Tube	ASTM A106 GR.B (STPT 42)	18% Cr, 10% Ni, 1% Ti or Nb, stainless steel (SUS 321)
Outlet Tube	ASTM A335 P22 (STPA 12)	
Coolant Chemistry		
PH	9.5 - 10.0	7 ± 0.2
Ammonia	10 - 20 ppm at inlet	
Oxygen	0.006 ppm max.	
Nitrate ions	0.1 ppm nom., 1.0 ppm max.	
Total solids	1.0 ppm max.	<0.5 ppm
Cation impurities-Fe	0.1 ppm	
-Other (Mg, Ca, Na)	0.2 ppm	
Anionic impurities-Cl	0.6 ppm	
SO_4		
HCO_3	0.1 ppm	
$-SiO_2$		
Conductivity		$< 1 \mu mho\ cm^{-1}$ (25°C)
Cl		< 0.05 ppm
SiO_2		< 0.05 ppm

* Smith, K.L. et al, Gentilly Nuclear Power Station Fuel Channel Design Submission
BLW-250 NOTE No.74, AECL, Dec., 1967

** Symposium on Some Engineering Aspects of the Winfrith Steam Generating Heavy Water Reactor, Thursday, 18th May 1967, Nuclear Energy Group of I.M.E., Conference on Steam generating and other heavy water reactors, 14-16 May, 1968, BNES
THE WINFRITH SGHWR, pamphlet, Reacter Group U.K.A.E.A.

II Assessment of the Tentative In-Service Inspection Program for the Prototype Heavy Water Moderated, Boiling Light Water Cooled Reactor "FUGEN"

1. INTRODUCTION

It has been recognized that the In-Service Inspection (ISI) of nuclear power facilities is one of the best means of assuring the reliability of these components against plant outages and economic loss from component failures. In addition, ISI will ensure the safety of plant personnel and safeguard public health.

The Prototype Advanced Thermal Reactor (ATR, Heavy Water Moderated, Boiling Light Water Cooled Reactor) "FUGEN" has been designed, fabricated, tested, inspected and installed in accordance with the Ministry of International Trade and Industry, Japan (MITI) Technical Standards (basically equivalent to ASME Boiler and Pressure Vessel Codes).

In the planning of an actual ISI program for any type of reactor, as recommended by the International Atomic Energy Agency (IAEA), the failure modes of pressure containing components which are peculiar to each type of nuclear power facility should be taken into consideration. On the basis of such studies, the actual ISI program should be planned as adequate and effective for each type of failure.

On the other hand, ASME Boiler and Pressure Vessel Codes, Section XI, "Rules for IN-SERVICE INSPECTION OF NUCLEAR REACTOR COOLANT SYSTEMS", which is the most representative ISI Code, is basically stated in accordance with its complete application to conventional pressure vessel type nuclear power reactors, such as BWRs and PWRs.

Therefore, a tentative ISI program for the "FUGEN" is specified with reference to ASME B & PV Codes, Sec. XI, taking into consideration differences such as systems, structures, materials including creep phenomena and unstable failure modes and safety criteria, compared with those of conventional pressure vessel types of reactors.

In this paper, an assessment review has been undertaken to ensure that the tentative ISI program for the "FUGEN" is properly specified in accordance with the basic principles of ASME B & PV Codes, Sec. XI and the basic design philosophy of the "FUGEN".

In addition, the Canadian standard for periodic inspection of Candu type nuclear power plant has been applied to the main components of the "FUGEN" for understanding in comparison with ASME B & PV Codes, Sec. XI. The tables of results are given in appendix, with a brief description of the leak detection system, on which R & D work is progressing in the Oarai Engineering Center of PNC.

2. ASSESSMENT

The tentative ISI program for the "FUGEN" assessed such items as 'Examination Category', 'Area Subject to Examination', 'Part to be Examined', 'Extent of Examination', 'Frequency of Examination' and 'Method of Examination' based on the specifications of ASME B & PV Codes, Sec. XI. The results are shown in Tables 1, 2, 3 and 4 together with some problems that have become evident.

3. CONCLUSION

According to the results of assessment as shown in Tables 1, 2, 3 and 4, it has become clear that some problems would arise in the direct application of the specifications of ASME B & PV Codes, Sec. XI to the "FUGEN", because there are many differences including systems, structures, materials and safety criteria between the conventional pressure vessel and the advanced pressure tube type reactos.

If great number of pressure tube assemblies and inlet/outlet feeder pipes are regarded as a reactor pressure vessel and recirculating pipes respectively as specified in ASME B & PV Codes, Sec. XI, difficulties arises that are inevitable to pressure tube type reactors; viz. the enormous number of examinations required and the amount of time involved, which would be impracticable for inspections, plus the extremely limited space to conduct inspections, making some subjects of inspection inaccessible.

In spite of these problems, it can well be understood that there are clear differences between vessels and pipings of the conventional pressure vessel and the advanced pressure tube type reactors, such as safety criteria, in which the question of whether a hypothetical failure accident of the components should or should not be assumed and whether leak-before-rupture criterion could or could not be applied.

Taking into consideration these clear differences, it has been concluded that the tentative ISI program for the "FUGEN" shown in Tables

1, 2, 3 and 4 could be met together with the leak detection systems with the requirement to assure the reliability of the components against plant outages and economic loss due to component failures, plus, the safety of plant personnel and the protection of the general public health. The program could be carried out also at appropriate intervals and within the allowable time limit to maintain plant availability just as well as with conventional pressure vessel type reactors.

Needless to say, the ISI program for the "FUGEN" is still tentative, and should be subject to continuous revision based on the latest results of R & D on leak detection systems and ISI results.

4. TECHNICAL PROBLEMS

From the direct application of the requirements of ASME Codes, Sec. XI and CSA preliminary standard N 285.4-1974 to the "FUGEN", several problems have arisen.

They are itemized below for discussion.

1) The general principles and problem of ISI, which should be considered for pressure tube type power reactors for commercial use.

2) Difference of ISI principles resulting from difference of safety criteria and materials (i.e. failure mode), particulary for pressure tubes, upper and lower extension tubes, and inlet and outlet feeder pipes.

3) Extension and frequency of examination.

   a) Region of the pressure tube which is exposed to neutron fluence in excess of 10^{19} nvt (energy of 1 MeV or above).

   b) Full penetration welds of nozzle of upper and lower extension tubes.

   c) Inlet and outlet feeder pipes.

4) Lack of method (or difficulty) of volumetric examination.

   a) Rolled joint areas of pressure tubes.

   b) Full penetration welds of nozzles of upper and lower extension tubes.

   c) Circumferential welds for upper extension tubes-to-reducers.

d) Manhole nozzles, safe-end welds and manhole bolts of steam drums and lower headers, mainly due to structural problems.

5) Lack (or very difficult) of accessibility for examination.

a) Upper extension tubes, mainly due to existence of radiation shield plug.

b) Interior clad surface of steam drum, due to high radiation level.

6) Interpretation of the requirements of standards.

a) Seal plugs of pressure tubes, as pressure retaining parts.

b) Lower radiation shield plugs including other components, as core-support structures.

7) Leak detection systems

a) Possibility of substitution of volumetric or surface examinations.

b) Type and present stage of R & D, if underway.

8) R & D, now proceeding in Japan.

a) Pressure tubes monitoring.

b) Remote control ISI apparatus for steam drum and lower header.

c) Ultrasonic technique for stainless steel welds and dissimilar metal welds.

d) Leak detection systems.

9) CSA Preliminary Standards N285-4-1974

a) The technical basis of size classification R_E = 0.1 and 0.3, and stress classification, R_{SA} = 1/3 and 2/3.

b) The classification of size of failure for vessels and their nozzles.

c) The proper application methods of reduction factor F_A and F_B to nozzles.

d) The safe-end welds of nozzles belonging to vessels, or to piping.

e) Inspection areas required by ASME Codes, Sec. XI and not by N285-4-1974.

i) Interior clad surface of steam drums.

ii) Vessels-to-nozzle welds radiused section.

10) Concrete program of pressure tubes inspection in accordance with requirements set out in clause 12 of N285-4-1974 (Clause 12 is not specific and clear enough for a concrete program to be worked out)

A p p e n d i x

A-1 Tables of the Application of the Canadian Standard to the Main Components of "Fugen"

A-2 Development of Primary Coolant Leakage Detection System in Japan

A.2 Development of Primary Coolant Leakage Detection System in Japan

1. Introduction

It is essential to reactor safety that a reactor be provided with detection systems for primary coolant leakage into the containment area, with high sensitivity and fast response. It has been confirmed that it takes a long time for a small through-wall crack beginning in the primary coolant pipe to enlarge to a flaw big enough to lead to pipe rapture. Therefore, detection of coolant leakage at an earlier stage of a crack could prevent loss of coolant accident (LOCA).

With a view of this, several types of coolant leakage detection systems have been used in light-water reactors (LWR): sump water level, airborne particulate radioactivity, containment atmosphere humidity, etc. The leakage detection systems are required to detect a leakage rate of one gpm in less than one hour.

Fugen has leakage detection systems similar to those of LWR. It is considered that sensitivity and response time required for detection systems are determined from the following factors.

1) time lag from the initiation of a through-wall crack to pipe rapture

2) critical size of the crack resulting in coolability crisis of any fuel channel.

2) is very important, especially in the case of a crack in the core-inlet tube of pressure-tube type reactors.

Development of a new detection method is in progress in PNC from this point of view.

2. Principle of new detection method

The discharge of high-temperature and high-pressure water through a crack produces a great sound. There are two methods to pick up the sound:

1) monitor airborne sound with microphone

2) monitor solid-borne sound with acoustic emission sensor

As the transport delay time of the leakage signal from its source to the detector location is much shorter by these two methods than with other

methods used in LWR, as mentioned above, it will be possible to obtain a faster response with the new detection method.

3. Criteria for the new detection system

Development is underway for the first step, with the following criteria:

1) capable of continuous monitoring during reactor operation
2) detect core-inlet tube failure only — no source location required
3) minimum number of sensors
4) capable of detecting a leakage rate of 0.5-l/min in 30 seconds or less

4. Development program for the first step

1) Measurement of signal level and its frequency spectrum of coolant discharge sound, with various types and sizes of cracks. 1975-1976
2) Measurement of background level and frequency spectrum of mechanical noises, pump and hydraulic, from two-phase flow. 1975-1977
3) Measurement of sound attenuation through stainless steel pipes and wave guides. 1975-1976
4) Mounting method of detectors 1976-1977
5) Durability of detectors in nuclear power plant environment 1976-1977
6) Performance test in Fugen 1978

III PLANT SYSTEM

PRINCIPLES OF EMERGENCY CORE COOLING SYSTEM

1. Introduction

Basic requirements for Emergency Core Cooling System (ECCS) were studied before conceptual design of plant (STEP-2).

Conceptual system design for ECCS will be studied in STEP-2. Technical problems of design principles for ECCS have been identified.

2. Basic Requirements for the Safety Related System Design in Japan

2.1 The ordinance of the Ministry of International Trade and Industry (MITI)

The Commercial Fugen Plant shall be designed in accordance with the technical standards established by the MITI. This departmental ordinance was revised partially in Dec. 23, 1975 and the regulation is now stronger than before.

Design criteria for safety related system required by the ordinance are as follows.

2.1.1 Safety Related Equipment

1) The same safety related equipment shall not be shared by more than two units. However, this sharing is allowed unless such sharing jeopardizes reactor operation in terms of adequate function, capability and structure of a safety related equipment.

2) A safety related equipment (excluding reactor containment) shall be designed to have redundancy as either a safety related equipment itself or as the system with this safety related equipment.

3) A safety related equipment shall be designed to avoid missile damage following failure of steam turbines or pumps by providing missile protection or other adequate features.

2.1.2 Emergency Core Cooling System (ECCS)

1) A nuclear power unit shall have ECCSs which is able to remove the heat created in the reactor pressure vessel, in the event of failure of the ordinary heat removal systems.

2) An ECCS shall have the following features:

i) to prevent over-increase of fuel cladding temperature if fuel melt or severe failure occurs

ii) to prevent excessive generation of hydrogen gas by fuel cladding -- coolant interaction.

3) The pump in the ECCS shall be designed to perform normal function under the severest conditions which might occur in terms of temperature and pressure of the coolant in the reactor pressure vessel and those of atmosphere in the reactor containment vessel.

2.2 The Guide line of the ECCS for safety evaluation by government

1) An ECCS shall be provided to prevent fuel melt or severe failure. The tentative criterion is that the temperature of fuel cladding in the event of fuel melt or failure would be 1200°C

2) The ECCS shall be able to prevent excessive production of hydrogen gas by metal-water interaction.

3) At least two independent ECCSs shall be provided for the protection of fuel

4) All active components of the ECCS shall be capable of being tested during plant operation.

5) The ECCS shall be capable of start up and operation with or without off-site power supplies.

3. System Design Bases for ECCS

The design bases for the ECCS are as follows.

(1) Range of Loss of Coolant

COMMERCIAL FUGEN TYPE REACTOR (C-FUGEN) is a 428 pressure-tube type reactor. C-FUGEN has two independent reactor coolant recirculating loops. Each loop has pressure-tubes, outlet feeders, outlet feeder subheaders, steam drums, downcomers, recirculating pumps, lower headers, inlet subheaders and inlet feeders.

The assumptions made in design base accident analysis, are:

i) one of the two coolant recirculating loops fails, and the other loop remains operable.

ii) The steam drums do not fail, because the In-Service Inspection (ISI) provided is adequate.

The ECCS shall be capable of providing adequate core cooling in the event of a break of any size or leak in the nuclear steam supply steam, including a double-ended downcomer pipe break.

The positions and sizes of failures as the design basis of the ECCS, involve various problems. Further examination will be made before the conceptual design of ECCS starts.

(2) Power Sources

For any break, the ECCSs shall be capable of start up and operation independent of availability of off-site power supplies.

This requirement is the same as with Light Water Reactors. Therefore, power sources of the ECCSs, which are necessary to start up and operation in the event of Loss of Coolant Accident (LOCA), shall be connected not only to off-site power supplies but also to an emergency diesel generator and/or emergency batteries.

The emergency diesel generator system shall have two independent generators, each of 100% capacity.

(3) Component Failure

During the initial short period after start up of the ECCS at LOCA, the ECCS network must operate to satisfy all criteria, that in the event of a LOCA no single active component failure in the ECCS will be able to prevent automatic initiation and operation.

In the event of an active (or passive) component failure in the ECCS at a later stage, long time core cooling can be accomplished by operation of one of ECCS.

APPENDIX

The ECCS of "FUGEN" has three systems: Accumulated Pressure Coolant Injection System (APCI), High Pressure Coolant Injection System (HPCI) and Low Pressure Coolant Injection System (LPCI). The purposes of this system are: 1) to prevent the fuel cladding melting in an unforeseeable loss of coolant accident, 2) to prevent any zirconium reaction.

The APCI is designed to be operated by a low-water-level signal in the steam drum in the event of a large rupture in the cooling system.

Water is injected from the accumulator to the lower header. The HPCI is designed to be operated by a low-water-level signal in the steam drum in the event of rupture of medium and small pipings, such as pressure tube inlet feeders. Water is injected from the condensate storage tank into the steam drum at a pressure range of 30-80 Kg/cm^2g. The LPCI is designed to be operated by a low-water-level signal in the steam drum in the event of a large rupture accident. Water is injected from the condensate storage tank to the lower header of the failed loop when the steam drum pressure falls below 40 Kg/cm^2g.

The Engineered Safeguard Systems are:

(1)	High-pressure Coolant Injection System	(HPCI)
(2)	Low-pressure Coolant Injection System	(LPCI)
(3)	Accumulated Pressure Coolant Injection System	(APCI)
(4)	Reactor Core Isolation Cooling System	(RCIC)
(5)	Residual Heat Removal System	(RHR)
(6)	Steam Release Pool Cooling System	(SRPC)
(7)	Containment Spray Cooling System	(CSC)

The flow diagram of the Engineered Safeguard Systems is shown in Fig. 1, (Engineered Safeguard System Flow Chart of "FUGEN")

Table 1 Comparison of Safety-related Systems between "FUGEN" (1/2)

Item \ Plant	"F U G E N"	N O T E S
1. System Design		
Design Bases	Loss of Coolant Accident Loss of Off-site Power One Component Failure	
Redundancy	Two Independent Systems (100% Capacity x 2)	
Power Sources	Emergency Diesel Generators or Off-site Power	
Seismic Classification	A_1 class	
2. Emergency Core Cooling in case of Small and Intermediate Size Pipe Break Accident	HPCI + LPCI	
3. Emergency Core Cooling in case of Large Size Pipe Break Accident	APCI + LPCI	
4. Reactor Cooling System in case of Reactor Isolation	RCIC + RHR	

Table 1 Comparison of Safety-related Systems between "FUGEN" (2/2)

Item \ Plant	"FUGEN"	NOTES
5. Containment Air Cooler		
Air Cooler	Not available for LOCA Available for Noraml Operation Available for LOCA	
Air Purification	Available for Normal Operation	
Containment Atmosphere Temperature	40°C	
6. Containment Vessel Depressurization System	Containment Spray System	
7. Containment System Type	Semidouble Containment with Annulus Wall	
Containment Vessel	Steel	
8. Safety Evaluation		
Maximum Credible Accident	Assumed that half core fuels are perforated.	
Hypothetical Accident	Assumed that half core fuels are melted.	

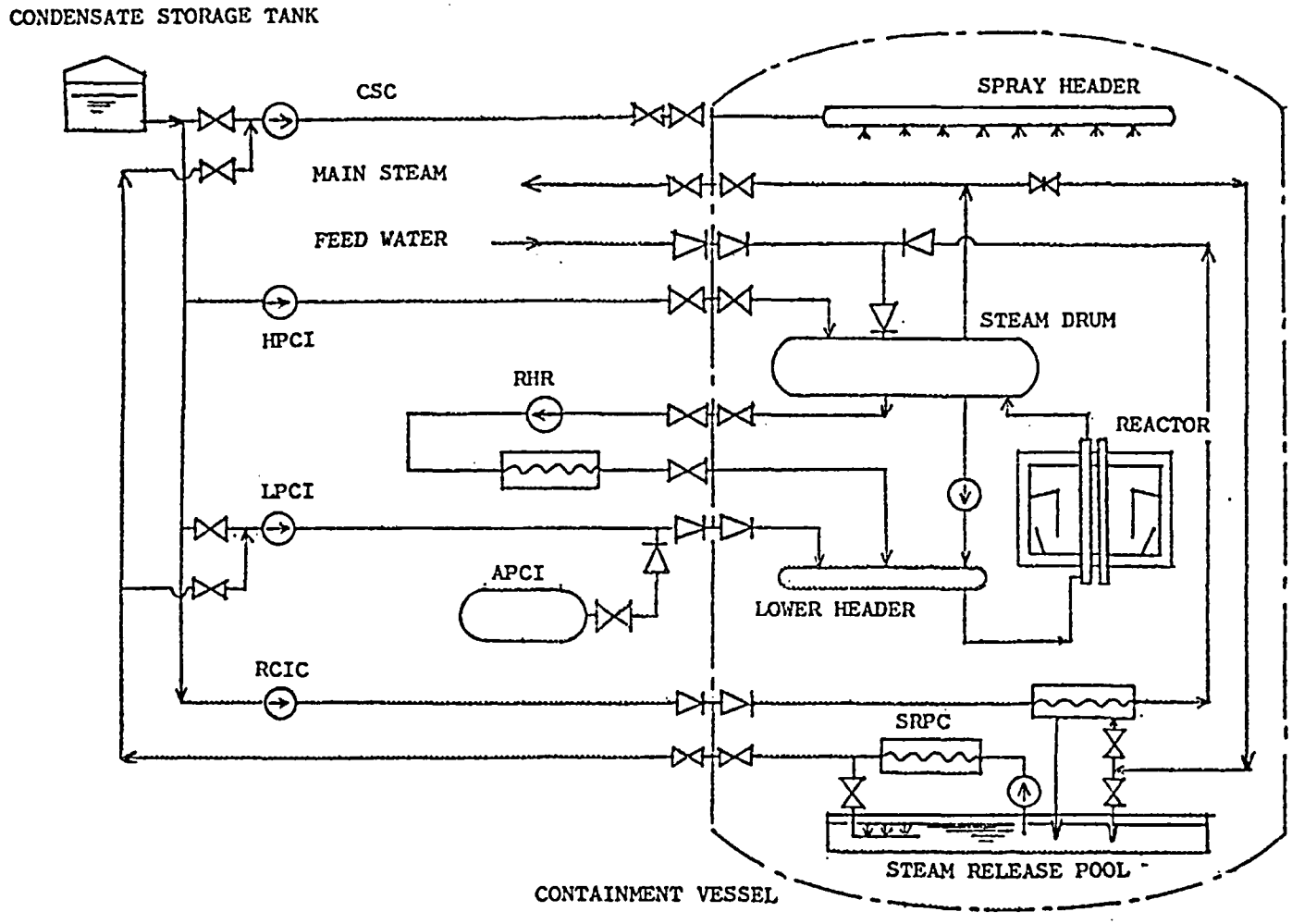

FIG. I ENGINEERED SAFEGUARD SYSTEM FLOW CHART OF"FUGEN"