The current status of experimental reactor physics, criticality and shielding studies

G. Ingram, BSc*
I. J. Curl, BSc, MSc, PhD†

Following brief descriptions of the AEA Technology low power reactors, DIMPLE and NESTOR, the current trends in reactor physics, criticality and shielding experiments are illustrated by examples of the recent experimental programmes on the two reactors. The topics covered range over pin power distributions in power reactors, irradiated fuel studies, the sub-criticality of fuel storage arrays and shielding in fast and thermal reactors. All the experiments have the common aim of validating calculation methods and data and reflect the steadily increasing trend for international collaboration in this field.

All the facilities for reactor physics, criticality and shielding experiments in the United Kingdom are now concentrated at the AEA Winfrith Technology Centre in Dorset. This allows close collaboration with those developing the codes and data for these fields, who occupy the same building complex. Central to the experimental studies are the versatile low power reactors DIMPLE and NESTOR, supported by the Reactor Services Counting Laboratory, and ARCAS, a facility for gamma-ray studies. The programmes for all four facilities are co-ordinated and run by a multidisciplinary team within AEA Reactor Services.

The prime objective of the experimental programmes is the design, execution and analysis of high quality benchmark experiments which are essential to the development and validation of the calculation methods and data employed in the reactor physics, criticality and shielding fields. All of the experiments have common themes, tending to focus either on those areas where there are likely to be significant economic benefits or those where safety is an overriding issue.

Each of the experimental facilities is briefly described here and then, to illustrate the trends in experimental studies, an outline is given of some examples of their more recent programmes.

Reactor physics and plant criticality studies

DIMPLE

DIMPLE is a versatile, water moderated, low power reactor. The main features are illustrated in Fig. 1. Essentially it comprises a large aluminium reactor tank, 4 m high and 2·6 m in diameter, within which arrays of fuel are supported and precisely located by a beam structure. The tank is enclosed in steel-lined concrete shielding, which also provides a secondary containment.

Conventional assemblies consist of arrays of fuel pins, where flexibility is achieved by varying the lattice plate design, the fuel type and the nature and quantity of structural or neutron absorbing materials incorporated within the lattice. In this way both simple geometry fuel pin benchmarks and more complex configurations, simulating operational or accident conditions, can be studied. Designs have also been investigated for other fuel geometries and for systems with neutron spectra ranging from fast to well thermalized.

The reactor is controlled by water level alone, precise amounts being added or removed to balance the reactor at power. Shutdown is by means of a fast dump system, which drops the water level in the reactor tank by 300 mm in about 1 s. This is accompanied by a simultaneous but slower dumping of the water into tanks located in a pit adjacent to the reactor. Although in principle DIMPLE can be operated with banks of conventional control rods, the present arrangement is ideally suited to reactor physics and criticality studies.

The reactor typically operates at power levels up to a few hundred watts, permitting rapid access and allowing complex programmes to be completed with a high level of efficiency.

PWR-related experiments in DIMPLE

Lattice studies in DIMPLE are providing experimental benchmark data for the validation of the calculation methods and data used in the design and operation of thermal power reactors. One important aspect of this work is the assessment of pin power predictions.

*Experimental Reactor Physics Department.
†Radiation Physics, Shielding and Criticality Department, Physics and Thermal Hydraulics Division, AEA Reactor Services, Winfrith Technology Centre, Dorchester, Dorset, UK.

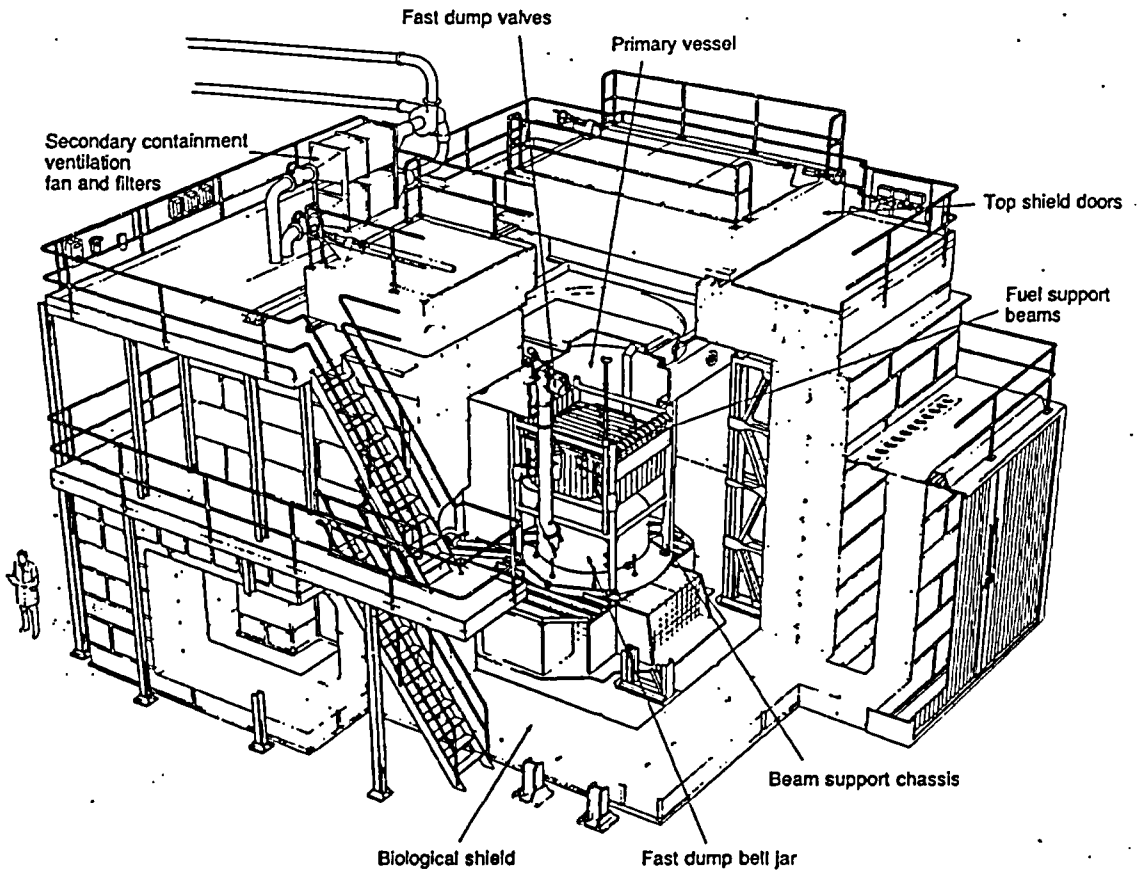

Fig. 1. DIMPLE low power research reactor

In analysing DIMPLE experiments with cylindrical geometry assemblies, it was observed that discrepancies up to 10% between pin-power predictions and experiment could exist at the core/reflector interface. To extend these studies to complex power reactor geometries, a reference cruciform array of 3072 stainless steel clad pins of 3% enriched uranium oxide on a 12·51 mm square pitch was established. This effectively represented twelve fuel elements in a rectangular corner configuration in the PWR. Pin power distributions have been studied in three major versions of this configuration. The first had a simple water reflector.[1] In the second, the assembly was enclosed azimuthally in a 27 mm thick stainless steel reflector, typical of a PWR baffle region. The third version investigated the impact of steel clad, borosilicate, burnable poison pins and empty guide thimbles on the adequacy of both fine structure and macroscopic power predictions.[2]

Predictions of the reaction rates in the assemblies have been calculated using the LWRWIMS lattice code,[3] with the 1986 WIMS data library[4] and with the options recommended for the Sizewell B PWR. This package is used to generate data for the three-dimensional steady-state, transient and fuel management code PANTHER.[5] A typical quarter-plan model of the cruciform assembly is shown in Fig. 2. A 39 × 39 mesh grid was used, allowing each cell associated with a fuel pin, a poison pin or an empty thimble to be represented individually. This mesh was continued across the baffle into the adjacent radial water reflector. Beyond this, the mesh was expanded to about two pin pitches. For each cell type, six group cross-section data were generated using collision probability calculations, using a multicell method to represent interaction effects. These data were then used in the diffusion theory code GOG, together with corrected diffusion coefficients appropriate to a transport theory model of the heterogeneous lattice, derived using the CACTUS DMOD option. A measured axial power profile was applied to the GOG calculations to represent axial neutron leakage.

Measurements of the reaction rates in the assemblies were obtained using standard techniques and involved over 1000 foil measurements. The reactions chosen were those of prime importance to the neutron balance in the lattice, i.e. fission in ^{235}U and fission and capture in ^{238}U, along with ^{239}Pu fission. Comparison of the measurements with prediction showed that in general there was good agreement over most of the assembly. However, in the outer row of fuel pins it was apparent there were significant differences. These were largest, reaching on average about 6% for ^{235}U fission,

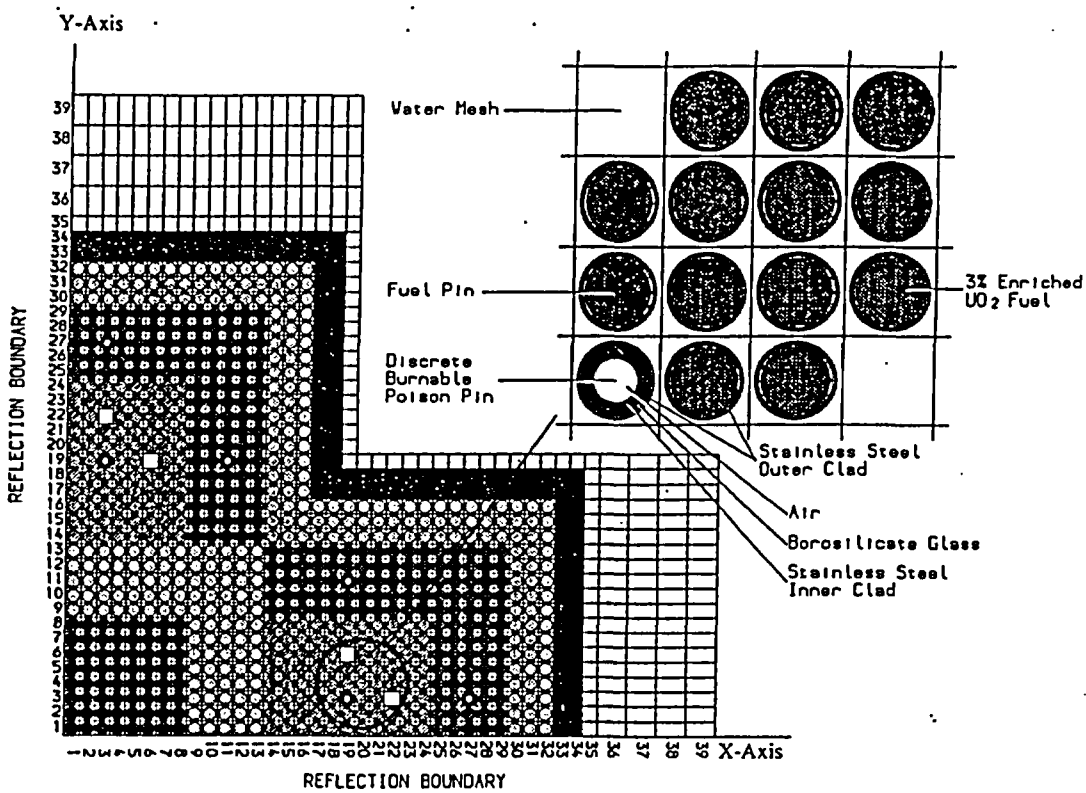

Fig. 2. Pin power predictions model

when there is no stainless steel baffle to attenuate the thermal neutrons returned from the water reflector.

The differences were smaller, by about a factor of three, with the baffle present and were relatively unaffected by the presence of burnable poison pins and empty thimbles. Additional measurements confirmed that the fine structure variations produced by these lattice perturbations were also, on the whole, well predicted. It is encouraging to note that the DIMPLE measurements, while showing that there are some shortcomings in predicted pin powers in the region immediately adjacent to the baffle, have none the less also served to demonstrate that the WIMS methods and data are adequate to meet the Sizewell B target accuracies of ±2%.

While accurate pin power predictions are a prerequisite for efficient fuel management, they also have an important impact on damage fluxes and the adequacy of ex-core surveillance procedures. Measurements were completed early in the cruciform lattice programme to assess the uncertainties in the radial fast neutron fluxes at various locations spanning the equivalent PWR barrel position. These measurements, which used absolutely calibrated sulphur and rhodium threshold detectors,[6] provided an important and consistent link with shielding studies using the ASPIS facility in NESTOR, which is described later in this Paper. More recently the DIMPLE studies have been extended to a direct simulation of the essential features of a PWR barrel, containment and ex-core surveillance detector (see Fig. 3). The purpose of this work was to provide experimental validation for the methods and data used to predict the response of the ex-core neutron detectors to a range of safety related events in the core. The results of this programme, which was completed earlier this year, are currently being analysed.

Criticality experiments in DIMPLE

Sub-critical monitoring has played an important role in the experimental programmes of low power reactors at Winfrith for many years. One approach, the modified source multiplication (MSM) technique, was developed to measure shutdown margins for core performance studies in the low power fast reactor ZEBRA.[7] The technique is now used routinely in the prototype fast reactor at Dounreay during refuelling operations.

Briefly the technique is based on the principle that in a system which is just sub-critical and which contains a neutron source, the inverse count rate from a neutron detector is directly related to the sub-criticality. Thus the amount by which a system is sub-critical can be obtained by comparing count rates with a reference system where the sub-criticality is known. This simple source multiplication model only applies close to a critical state, i.e. where the power distribution is appropriate to that of a self sustaining chain reaction. As the system becomes more sub-critical the neutron source and detector efficiencies change. In its

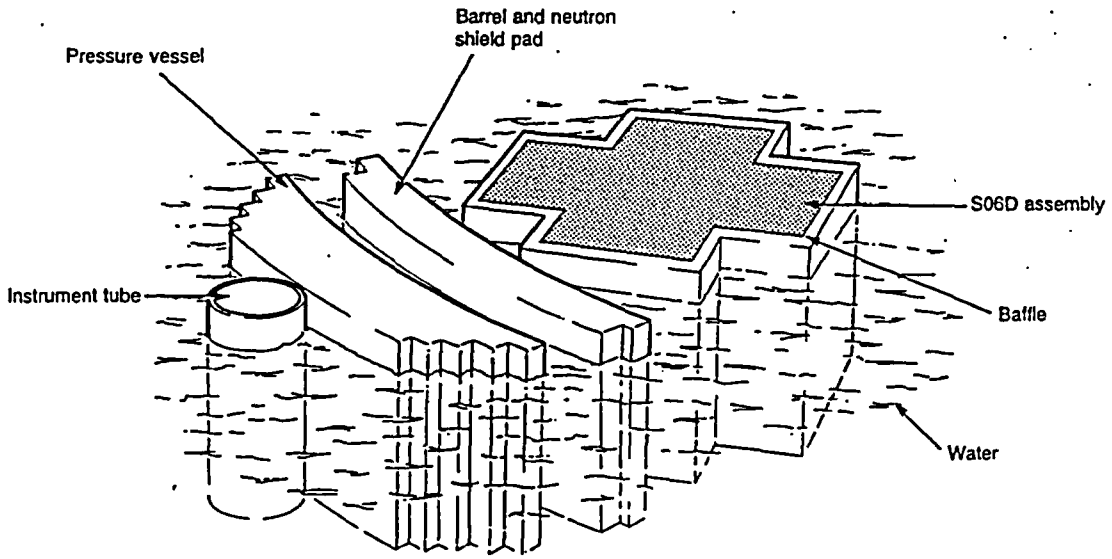

Fig. 3. Ex-core detector benchmark (simplified)

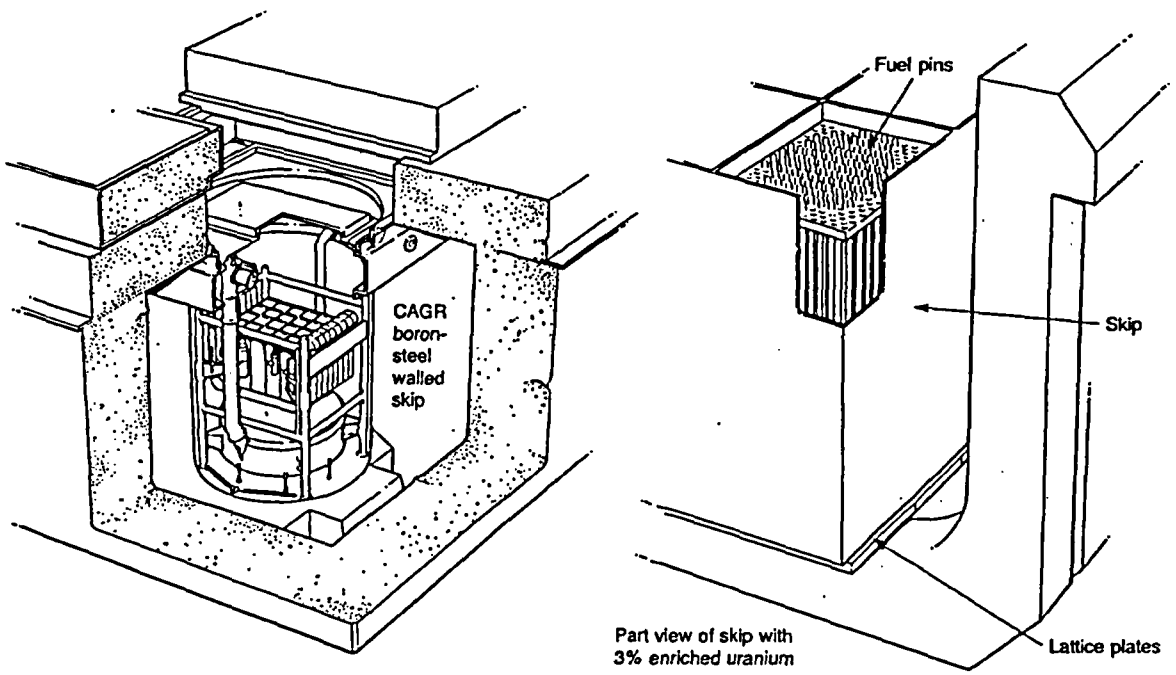

Fig. 4. Layout of CAGR skip in DIMPLE

modified form, source mode calculations are used to correct for these departures from linearity.

As part of a criticality code validation programme MSM has been applied in DIMPLE, in a series of sub-critical transport flask arrays. The measurements were made with a twenty compartment boron steel walled skip, 1·4 m long, 1 m wide and 0·9 m high. Skips of this type are used inside a steel container for pond storage of irradiated fuel from commercial advanced gas-cooled reactors (CAGRs) and this in turn is placed inside a lead-lined steel flask for fuel transport. Although of generic value, the measurements also provided direct support for the safety assessment of the BNFL Pond 5 CAGR dismantler facility at Sellafield.

The arrangement of the skip in DIMPLE is shown in Fig. 4. To establish a reactivity scale the skip was first loaded with fuel until criticality was reached. This was achieved with a uniform loading of 196 UO_2 pins, at 3% enrichment, on a square pitch across each of the compartments. With ^{252}Cf neutron sources installed in the skip and with the critical water height reduced by a small amount to provide a precisely

known level of sub-criticality, the count rates from BF_3 counters in and around the skip were then measured. Similar measurements in more realistic transport/storage arrays of pins were then compared with these reference results to obtain a measure of the sub-criticality.

For the majority of the sub-critical measurements the clusters of 3% enriched UO_2 pins were constrained in each compartment to a diameter appropriate to the CAGR dismantler. Here k_{eff} ranged from 0·71 for a 52 pin cluster, through an optimum of 0·84 for a 112 pin cluster and down to 0·78 for a tightly packed array of 221 pins. Small increases in k_{eff} were observed when the interaction between the compartments was increased. This was achieved in a number of ways, such as by increasing the cluster diameter, by moving the clusters, by increasing the pin loading density at the cluster edge, by voiding and by simulating loading accidents with extra pins added to the central compartments of the skip.[8]

The uncertainties in the k_{eff} values were typically ±0·01 (one standard deviation) where this corresponds to an uncertainty of about ±7% in the measured sub-criticality, ±5% coming from the calibration of the reference reactivity and the remainder coming from a combination of counting statistics, neutron detector reproducibility and the influence of asymmetries within the skip.

The experiments demonstrated that WIMS and the UK's standard criticality Monte-Carlo code, MONK6,[9] both of which were used in support of the CAGR dismantler safety cases, provided excellent predictions for the complex skip geometries. Further confirmation was provided by a series of critical experiments with the skip, which were designed in collaboration with the French Commisariat à l'Energie Atomique (CEA) at Fontenay-aux-Roses and which attracted funding from the Commission of the European Communities (CEC). These simulated an extreme transport flask loading accident, with a cluster of 7% enriched UO_2 pins replacing a 3% cluster firstly at the centre of the skip and then at the edge. In spite of the extreme tilts in power distribution present in these assemblies, MONK6, WIMS and the French Monte-Carlo code, MORET, all gave good agreement with experiment.[10]

The DIMPLE experiments demonstrated once again that MSM is a powerful technique for measuring sub-criticality. One limitation in its current application, however, is the need for calibration against a reference configuration in which the sub-criticality is known precisely. This poses no problems in a low power reactor, but precludes its application in a plant environment. To broaden the application requires a knowledge of the neutron source strength, which could then be used in a source mode calculation to obtain the spatial variation of count rates of absolutely calibrated neutron detectors as a function of k_{eff}.

Irradiated fuel studies in DIMPLE

Studies using small samples of irradiated fuel in DIMPLE are providing a series of well-defined measurements of the reactivity loss with burn-up for code validation. With the incentive to achieve higher fuel burn-ups and hence higher fission product concentrations in power reactors, these studies are of increasing importance for fuel management. However, the results have a broader application and are equally important in the criticality field, where economic pressures are already leading to a need for plant operators to take credit for fuel burn-up in their fuel storage criticality assessments.

An example of these studies is provided by a series of experiments with three CAGR fuel samples, irradiated to 20 GWd/t(U).[11] Sample lengths of 120 mm were selected from regions where the power history was well defined, and welded into low neutron absorption zircaloy cans. To identify how well the burn-up calculations predicted the sample compositions, the principal actinides and the neodymium fission products, which provide a measure of the total fission, were quantified by chemical and isotopic analysis of specimens taken from the regions adjacent to the samples. When received at DIMPLE the samples had decayed for about two years.

The reactivity of the samples was established to a high precision by measuring the rates of increase and decrease in reactor power level produced by inserting and removing

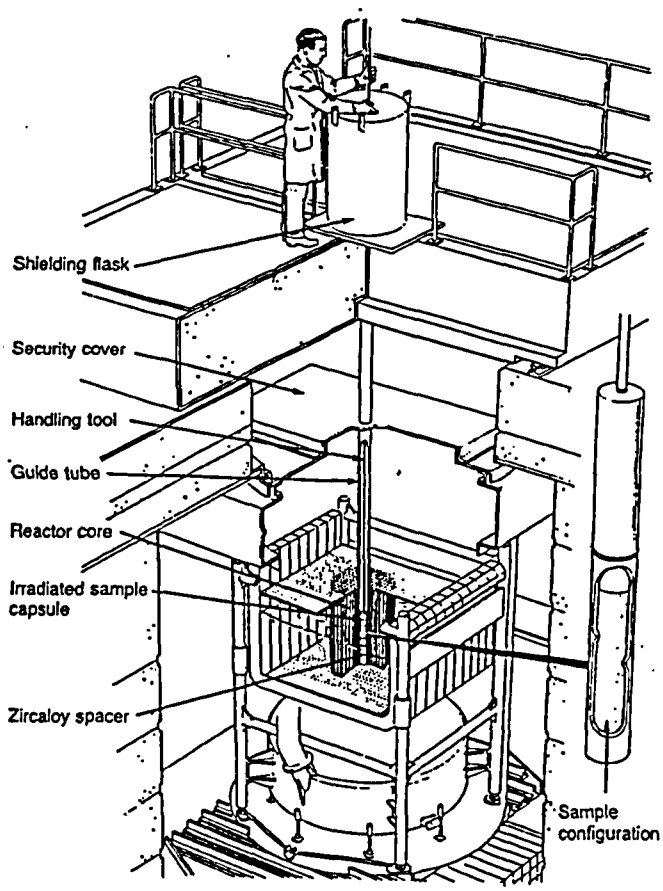

Fig. 5. Arrangements for handling irradiated fuel

the samples, these rates being converted to reactivity using the Inhour equation. Fig. 5 shows the handling arrangements in DIMPLE. To provide a reference reactivity scale, measurements were also made with a range of fissile and neutron absorbing standards. These included uranium and plutonium, with a variety of isotopic compositions, and boron, copper and steel.

To vary the neutron spectra the reactivity measurements were first made at the centre of a tightly packed assembly of 388 pins of 7% enriched UO_2, where about 50% of the neutron absorption in the fission products occurred in the resonance region. The second set of measurements were made at the centre of a 475 mm diameter aluminium tank containing heavy water, enclosed by annuli of 3% and 7% enriched UO_2 pins. Here about 90% of the neutron absorption in the fission products was in the thermal region. The third assembly was similar to the second but with a central light water region. In this case the reactivity changes were strongly dependent on the fission rate in the samples, the high energy fission neutrons being able to penetrate the water region and produce further fissions in the surrounding fuel. The reactivity changes were relatively insensitive to neutron absorption in the samples, this being negligible compared with that in the light water. Measurements here then provided a sensitive cross-check of the fissile content of the samples.

Two further sets of measurements were made with the irradiated samples. The first determined the neutron source strength by observing the change in power produced by inserting the sample in a sub-critical assembly and then comparing this with the corresponding change produced by an absolutely calibrated ^{252}Cf neutron source. The final set of measurements used gamma spectroscopy to identify the residual gamma activity in the samples.

The WIMS-E code[3] and the 1986 WIMS library[4] were compared with the reactivity measurements. A model of a CAGR cluster with its surrounding graphite, burnt up in accordance with the station power history, provided very good predictions of the actinide content and total fissions. Only small adjustments were required to bring these in line with the chemical and isotopic analyses for the subsequent reactivity calculations. The various contributions to the sample reactivities were obtained from a perturbation edit routine which combined fluxes, number densities and microscopic cross-sections from the WIMS-E model for each sample in each of the three assemblies with adjoints appropriate to the unperturbed configuration obtained from SNAP[12] calculations. A number of minor corrections, of the order of a few per cent, were necessary to allow for the approximations inherent in this approach.

The results from the assembly with a large light water central region confirmed the fissile contents of the irradiated fuel with an uncertainty of about ±1% (one standard deviation). The results also showed that in the predominantly thermal neutron spectrum, which is most relevant to the CAGRs, the WIMS data provided very good predictions of the reactivity loss with burn-up. This confirms reactor experience, with the added value of knowing that the agreement is not a fortuitous combination of compensating errors. Thus, comparing predictions with the irradiated fuel measurements and with similar measurements of the more important actinides present allows a breakdown of the various contributions to the irradiated fuel reactivity. On the basis of this analysis it was concluded that the fission product absorption is being predicted to an uncertainty better than ±6%.

In the assembly with a predominantly epithermal component to the neutron spectrum, an environment appropriate to some plant criticality situations, the agreement was less satisfactory. However, the predictions tended to underestimate the loss of reactivity with burn-up and so the use of WIMS data for criticality purposes would provide a pessimistic approach. The analysis of subsequent measurements with highly burnt up PWR fuel, currently in progress, may help to provide a better understanding of these discrepancies.

The measurements of the gamma and neutron source strengths in the irradiated samples were compared with predictions from the FISPIN code.[13] Gamma spectroscopy identified seven fission products — ^{95}Nb, ^{106}Rh, ^{125}Sb, ^{134}Cs, ^{137}Ba, ^{144}Pr and ^{154}Eu — which account for over 90% of the total gamma activity. Here agreement between prediction and experiment was generally good, except for ^{154}Eu where FISPIN significantly overestimated the content of each of the samples. The neutron source strengths were over-predicted by 6% to 16%, with an experimental uncertainty of ±5% (one standard deviation). Bearing in mind that the predominant neutron source, ^{244}Cm, results from a long chain of neutron captures, the agreement is surprisingly good. As indicated in the previous section, with this level of agreement, the outlook for making k value measurements in a plant environment using MSM is extremely promising.

The irradiated fuel work in DIMPLE has aroused considerable interest and plans are well advanced for a collaborative programme with CEA Cadarache. This programme will extend the range of irradiated samples and provide a consistent and quality assured database for validation purposes.

Shielding experiments

NESTOR and the ASPIS shielding facility

Methods of calculating radiation migration in reactor shields are continually evolving in order to allow more compact and efficient shields to be designed, and a sound experimental base is of importance for monitoring the performance of methods currently used or under development. A relatively strong source of neutrons is required to enable measurements to be made through typical shield configurations. The ASPIS shielding facility on the NESTOR

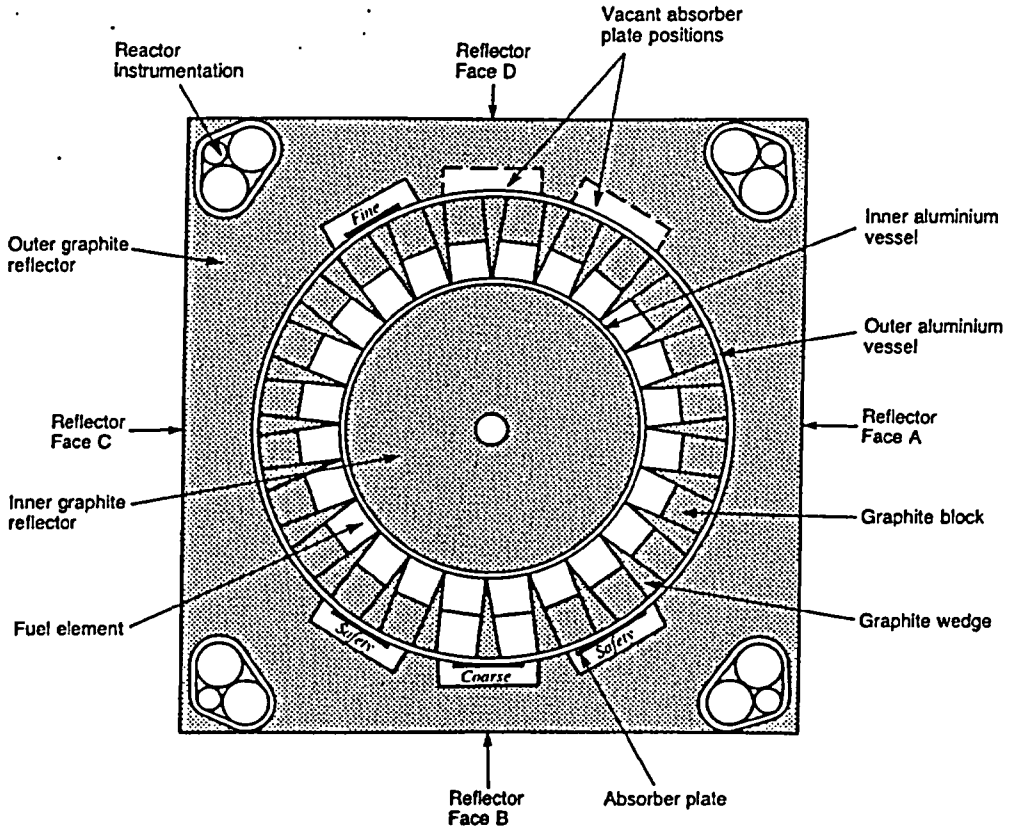

Fig. 6. Layout of NESTOR core

reactor has been used for this purpose since 1972 and is the sole facility for providing benchmark quality data for broad beam neutron penetration and streaming in the UK.

The host reactor NESTOR is a 30 kW, light water cooled neutron source reactor located adjacent to the DIMPLE reactor. Its annular reactor core resides at the centre of a 2 m graphite cube as shown in Fig. 6. Off each side face of the cube is an opening to a large shielded cave equipped with shutters of polyethylene, lead, cadmium and boral which can isolate the reactor and reduce the levels of radiation in the caves.

The ASPIS shielding facility is located on reflector face C of the reactor. One of its main features is the large mobile shield trolley which is 3·6 m long and has an internal cross section of 1·8 m × 1·9 m. When the trolley is parked outside the reactor cave (as shown in Fig. 7) test sections of shield can be installed. These are generally constructed with a slab-like geometry encompassing the whole range of potential shield materials and can, for instance, contain streaming penetrations. Access is left within the shield for neutron flux measuring devices such as threshold activation foils or gas filled proportional counters and for gamma devices. Prior to irradiation the trolley is pushed home into the reactor cave, rather like a filing cabinet.

The ASPIS trolley, loaded with a typical shield array, is shown in its irradiation position in Fig. 8. During irradiation the neutrons leaking from the NESTOR core enter the front face of the trolley and pass into the test shield. A prime requirement for any benchmark experiment is that the source of radiation should be well defined. For the type of deep penetration experiments required to support reactor assessment a good match to the actual neutron spectrum is also needed. To this end a simple fission plate of enriched uranium is located within the trolley to convert the low energy NESTOR leakage flux into a local primary fission neutron source. This can then be modified appropriately with a range of neutron scattering filters. The construction of one of the ASPIS fission plates, which provides a circular source of radius 56 cm, is shown in Fig. 8. The output of this fission plate is about 16 W. It is routinely calibrated in terms of spatial variation and strength to within an absolute neutron output of ±4%.

NESTOR is also host to several other facilities which have been used in support of ASPIS experiments. These are shown in Fig. 7. The thermal column, which has a cadmium ratio of about 2000, is used for instrument calibration. The NESSUS[14] reference radiation field, located at the centre of the inner reflector of the NESTOR core, has been used to compare ASPIS neutron activation detectors with those that are installed for dosimetry in commercial PWRs.

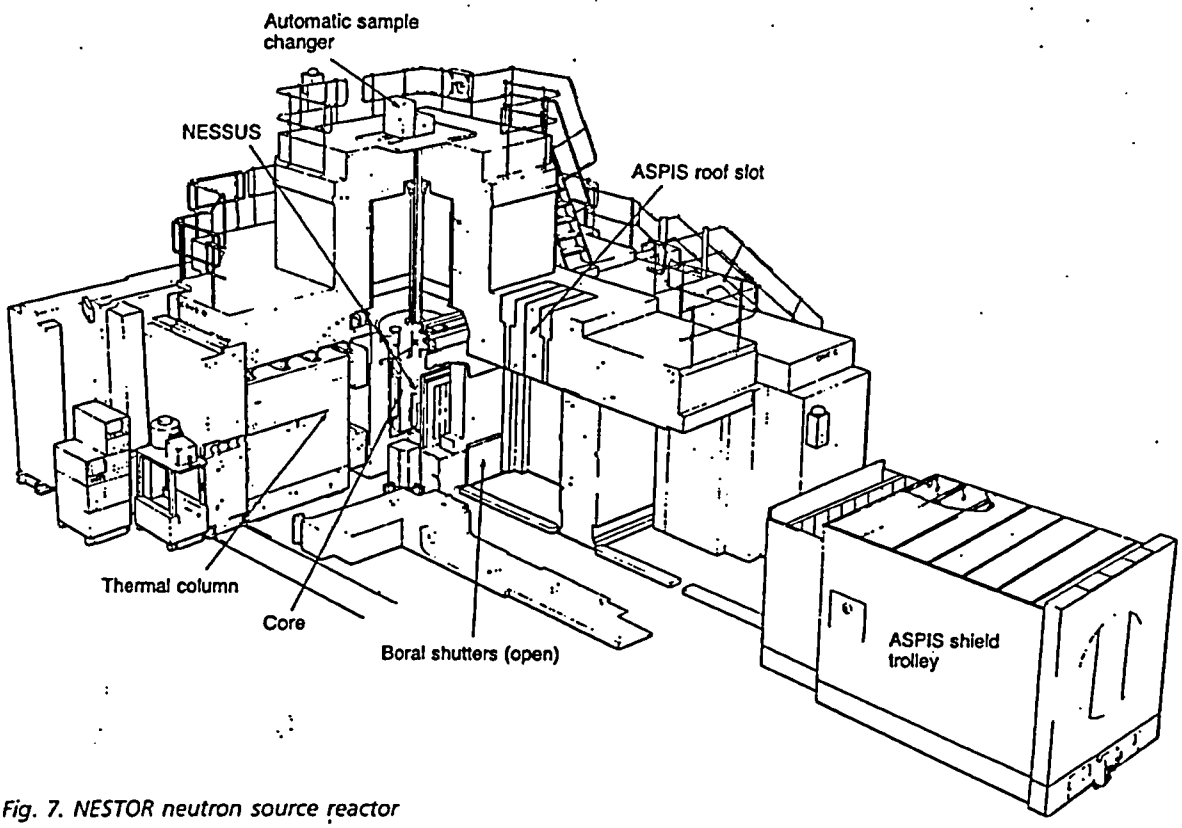

Fig. 7. NESTOR neutron source reactor

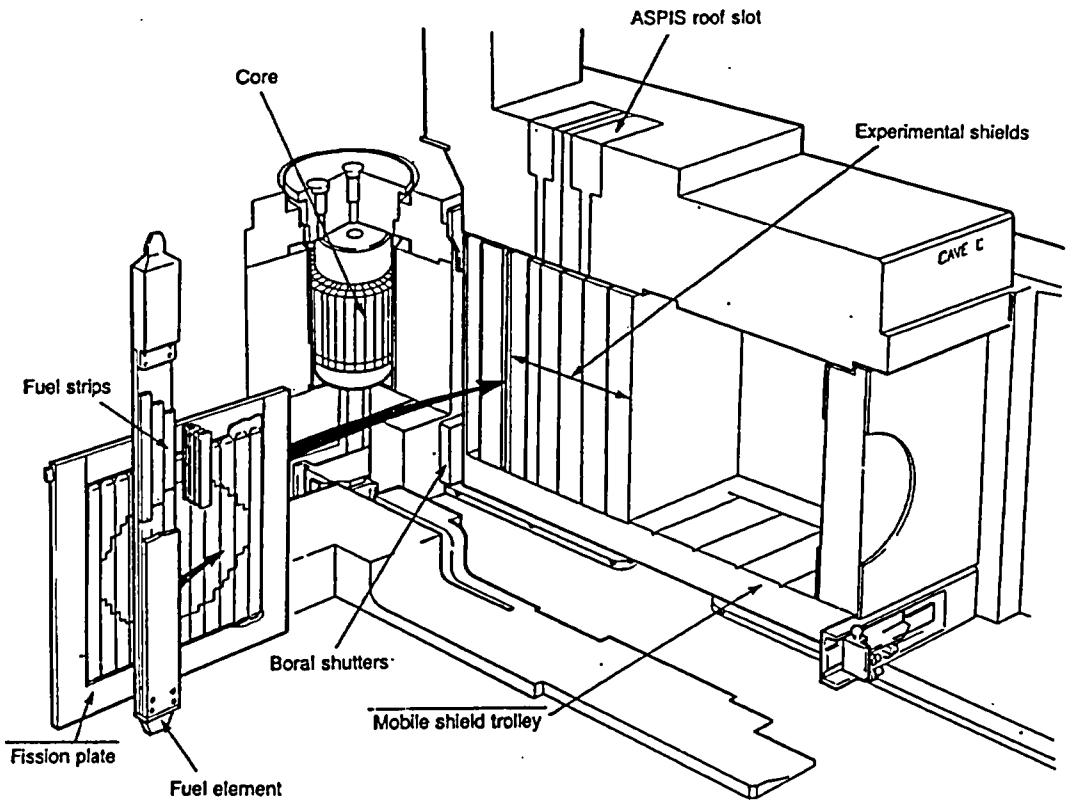

Fig. 8. ASPIS shielding facility

EFR related experiments in ASPIS

The approach adopted to support the radiation shielding requirements of the European fast reactor (EFR) is a good example of some of the major trends now influencing the generation of radiation shielding benchmarks. In 1986 there was a rationalization of all the key work areas for EFR. The purpose was to increase efficiency by removing duplication and increasing collaboration between the partners. As a result the French JASON shielding programme was moved, along with test shield components, to the ASPIS shielding facility. The collaborative programme called JANUS,[15] is aimed at assessing the accuracy of data and methods which will be used in the substantiation of the EFR design.

Due to the compact pool design of the EFR it is necessary to have efficient shielding around the core and around the internal fuel store to reduce the fission rate in the fuel store and to reduce activation of the secondary sodium in the intermediate heat exchanger. This has been achieved by the extensive use of shielding components with a high B_4C content in both the radial and axial shields. In conflict with the shielding requirement is the need for the detector flux at the neutron monitoring sites in the structure above the core to be greater than 10^9 n cm^{-2} s^{-1}.

The importance of predicting the accuracy of attenuation through B_4C components and the limited availability of benchmark data for B_4C, has made studies incorporating various dispositions of B_4C a major part of the JANUS programme. The programme has adopted a step-by-step approach. First, single material benchmarks comprising stainless steel, boron carbide or sodium slab components were devised to provide a consistent validation set for the basic nuclear data. Composite shields were then constructed from these materials to provide validation data for different combinations. In all cases a mild steel spectral filter was installed between the fission plate and the test shield to simulate a fast reactor core leakage spectrum. Seven out of the original nine bnechmark experiments were completed by April 1991 and further phases are planned to study the specific problem of streaming through control rod followers in the upper axial shield. All completed JANUS experiments are in the process of being comprehensively analysed by the EFR partners.

An example of the outcome of the analysis of the single material data testing benchmarks is provided by the analysis of the $^{32}S(n,p)^{32}P$ reaction rate data through the stainless steel benchmark. The sulphur reaction has a threshold around 2·6 MeV and is indicative of the penetrating neutrons which are of importance deep in the shield. The Monte-Carlo calculations using McBEND[16] showed a trend to under-predict the absolute reaction rates by 10% to 20% and to over-predict the attenuation by about 30% following an attenuation of 10^4.

An uncertainty analysis using the DATAK[17] method puts the total fractional standard deviation on the McBEND predictions of the sulphur reaction rate at ±30% after penetration through 35 cm of steel. Of this the stochastic uncertainty from the Monte-Carlo calculation accounts for only ±7%, the source strength ±4% and the sulphur response cross-sections ±7%. The major contribution of ±28% arises from uncertainties in the transmission data, mainly the non-elastic cross-sections, indicating that the discrepancies observed between prediction and experiment are primarily attributable to these. To comment on the adequacy of the nuclear data, use can be made of 'sensitivities', which are estimated during the McBEND calculation; sensitivities are estimates of the change in a detector response resulting from a change in the nuclear data. Applying the sensitivity data in a DATAK consistency analysis, wherein agreement was sought between calculation and the measured reaction rates, demonstrated that the JEF1 non-elastic iron cross-section in the energy range 0·71–4·4 MeV was probably too high.

The comparison of the analysis with experiment for the composite shields have permitted calculational biases, as a function of shield penetration, to be quantified for these types of shield. As an example, in the sodium region behind a 24 cm stainless steel shield containing 10 wt% B_4C, under-predictions by a factor of two in the low energy flux have been demonstrated. From measurements of the low energy flux within the B_4C it has been shown that helium production within the B_4C is generally well predicted. Future analysis of the recently completed Phase 7, which studies a 50 cm deep stainless steel/B_4C region containing 73 wt% B_4C will provide a more extreme test of the methods and data approaching the scale of EFR shield components.

PWR related experiments in ASPIS

Benchmark experiments cannot always be fully representative of the engineering scale of reactor shields but, when correctly designed, they can provide all the necessary validation data for the physical processes involved. The NESDIP[18] programme is an example of this type of work, conducted in support of the Sizewell B safety case. The NESDIP programme was initially designed to study neutron penetration through typical PWR radial shields for pressure vessel dosimetry purposes, but was extended to encompass neutron streaming within the reactor cavity to regions outside the primary shield for the assessment of personnel doses.

The path through the primary shield is by penetration through the radial shield, followed by streaming within the cavity and scattering from the nozzle region down the coolant duct. This path involves the three different processes of penetration, streaming and scatter and makes for a complex radiation transport problem, which is impractical to complete with a single calculation. The route followed used appropriate methods for the different penetration mechanisms, i.e. Monte-Carlo for radial shield penetration and a point kernel method for the cavity streaming. The prediction of these quantities required up to five linked calculations using the McBEND, MULTISORD and RANKERN[16] codes.

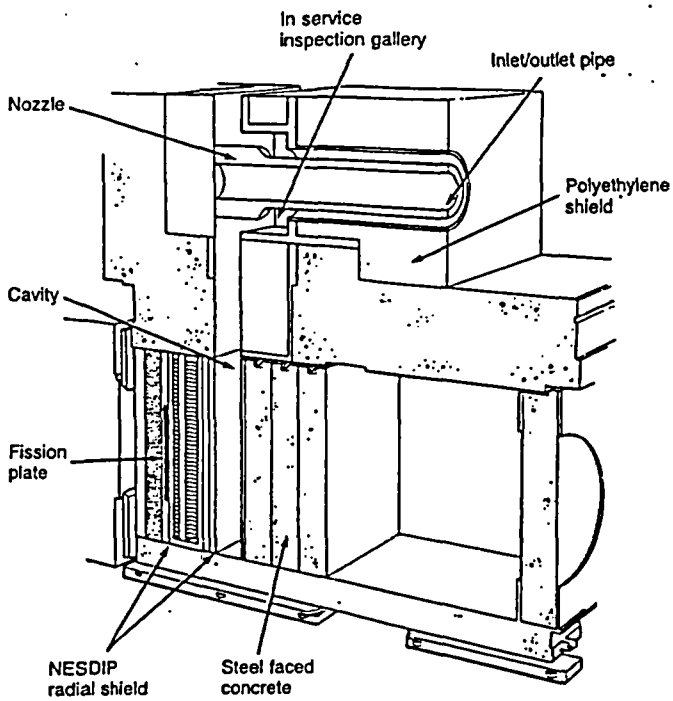

Fig. 9. ASPIS LWR streaming benchmark

To test the calculation route a simulation of the radial shield, reactor cavity and coolant inlet/outlet nozzles of a commercial PWR was constructed in the ASPIS facility as shown in Fig. 9. Within the trolley a simulated radial shield, cavity and biological shield was installed. The thickness of the radial shield was not full size, as this would have reduced the flux levels in the cavity below detection limits, but the leakage neutron spectrum was shown by measurement to be very similar to that found outside a full size radial shield. The cavity within the trolley was extended vertically through the demountable roof slot of ASPIS to a half size nozzle assembly.

Extensive use was made of gas filled proportional counters to map the neutron flux distributions and to measure neutron spectra within the cavity and around the nozzle assembly. The most extreme test of the calculation route, the prediction of low energy neutron activation fluxes at the outboard end of the coolant duct, was within a factor of 3 following a system attenuation of 10^7 for the high energy neutron flux; a satisfactory result in the context of dose assessment.

The NESDIP measurements incorporated a series of cause and effect studies, which are difficult to estimate theoretically. The effect of cavity insulation material on the shutdown dose rates at the flange where the nozzle meets the pressure vessel is in this class. Measurements were made using BF_3 chamber measurements below the nozzle region, with and without the insulation present. For a 21 cm cavity the effect of insulation was a reduction in the shutdown dose rates at the flange by a factor of 0·3; a worthwhile refinement to the study.

Shielding experiments in ARCAS

The ARCAS gamma ray shielding facility, which complements the neutron capabilities of the ASPIS shielding facility, is illustrated in Fig. 10. Essentially it consists of a large shielded cave, where up to 27 ^{60}Co sources, with a combined strength of 2×10^{12} Bq can be moved under computer control to simulate spatially complex radiation fields.

Many gamma ray shielding problems can be analysed using the simple point kernel method and the AEA code RANKERN is widely used in the UK nuclear industry for this purpose. There are, however, dangers in using the simple point kernel solution for shield design with the normal build up factors, which correct the uncollided flux for the scattered component. Most practical problems involve complicated geometries — even slab shields are no exception, if account it taken of the distribution of the source and dose points. A simple correction factor for oblique incidence derived from Monte-Carlo studies is used to extend the range of application of the point kernel method. Experiments were devised in ARCAS to confirm the range of validity of this method[19] when applied to realistic shield situations. In all the cases studied the oblique incidence correction factor was shown to be valid, provided the correction did not increase the dose rate by greater than a factor of 10 compared with the normal build up method.

This type of information is essential to the shield designer, who can then assess when it might be prudent to move to a more sophisticated calculation. Although this type of study could be completed using Monte-Carlo methods for instance, the experimental approach using ARCAS remains a valid option due to the low running costs of the facility. In addition a measured dose rate leaves little room for dispute in the case of a discrepancy.

Conclusions

Experimental validation is vital as increasing reliance is placed by the nuclear industry, and the licensing authorities in particular, on complex computer codes. Already there is a wealth of high quality, international, experimental data, much of it generated by the AEA using the experimental facilities at Winfrith. None the less, as shown by the examples described here, there continues to be a steady requirement for benchmarks.

The current experimental programmes reflect the pressures to reduce costs while maintaining high levels of precision. With these pressures the task of designing, executing and analysing benchmark experiments is increasingly undertaken on an international scale, a trend which seems likely to continue.

References

1. Knipe A.D., Burbidge B.L.H. and Franklin B.M. Core/reflector boundary studies in DIMPLE. *Proc. Int. Reactor Physics Conf.*, Jackson Hole, Wyoming, 18–22 September 1988, 3, pp. 465–476.

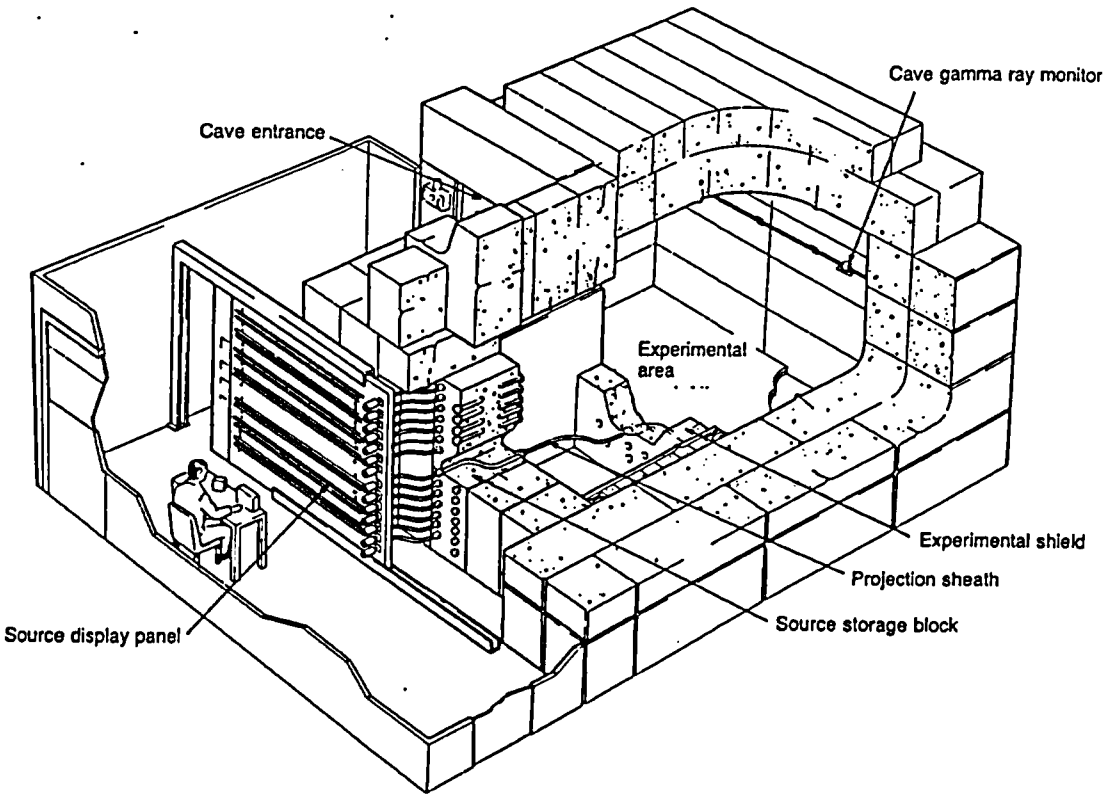

Fig. 10. ARCAS (generalized)

2. KNIPE A.D., BURBIDGE B.L.H. and FRANKLIN B.M. A burnable poison pin benchmark study in DIMPLE. *Proc. Int. Conf. Physics of Reactors: Operation, Design and Computation*, Marseille, 23–27 April 1990, 1, pp. 1–12.
3. HALSALL M.J., POWNEY D. and MOXOM M.R. LWRWIMS, the WIMS code for light water reactors. *Proc. Int. Conf. Physics of Reactors: Operation, Design and Computation*, Marseille, 23–27 April 1990, 3, pp. 45–55.
4. HALSALL M.J. and TAUBMAN C.J. *The '1986' WIMS Nuclear Data Library*. UK AEA Winfrith, AEEW-R2133, 1986.
5. EMMETTT J.C.A. and HUTT P.K. *PANTHER and the UK code package for fuel management calculations*. IAEA Technical Committee on Improvements of In-Core Fuel Management Codes, Madrid, 1988.
6. KNIPE A.D. *et al.* The use of a DIMPLE mock-up experiment to assess the uncertainties in the radial shield fluxes of a PWR. *Proc. 7th Int. Conf. Radiation Shielding*, Bournemouth, 12–16 September 1988, 1, pp. 231–239.
7. STEVENSON J.M. *et al.* Experience with subcritical monitoring in large critical assemblies. *Proc. Int. Symp. Fast Reactor Physics*, Aix-en-Provence, 24–28 September 1979, STI/PUB/529, 2, pp. 131–146.
8. INGRAM G, KNIPE A.D. and FRANKLIN B.M. Development of subcritical monitoring techniques using the DIMPLE reactor. *Proc. Int. Topical Meeting on Safety Margins in Criticality Safety*, San Francisco, 26–30 November 1989, p. 104.
9. BRISSENDEN R.J. and SUNMAN C. A short history of criticality safety in the UK. *Nucl. Energy*, 1991, 30, No. 5, Oct., 279–284.
10. STEVENSON J.M. *et al. Benchmark experiments to simulate a nuclear transport flask loading accident with fuel elements of unequal reactivity*. Commission of the European Communities. EUR-12048-EN.
11. MARSHALL J. *et al.* Irradiated fuel measurements in DIMPLE. *Proc. Int. Conf. Physics of Reactors: Operation, Design and Computation*, Marseille, 23–27 April 1990, 2, pp. 45–53.
12. MCCALLIEN C.W.J. *SNAP-3D a three-dimensional neutron diffusion code*. United Kingdom Atomic Energy Authority, Winfrith, 1975, TRG 2677 (R).
13. BURSTALL R.F. *FISPIN — a computer code for nuclide inventory calculations*. United Kingdom Atomic Energy Authority, Winfrith, 1979, ND-R-328 (R).
14. CARTER M.D. *et al.* A NESSUS reference field in the NESTOR reactor at Winfrith. *Proc. 7th Int. Conf. Radiation Shielding*, Bournemouth, 12–16 September 1988, 1, pp. 193–199.
15. CALAMAND D. and CURL I.J. A review of progress with the JANUS programme of fast reactor shielding benchmark experiments. *Proc. Int. Conf. Physics of Reactors: Operation, Design and Computation*, Marseille, 23–27 April 1990, 1, pp. 1–11.
16. MILLER P.C. *et al.* UK shielding methods in the 1990s — maintaining the role of the approximate and of the exact. *Nucl. Energy*, 1991, 30, No. 5, Oct., 307–314.
17. WRIGHT G.A. *et al.* Monte Carlo sensitivity analysis of the Winfrith benchmark experiments using JEF 1 cross-sections. *Proc. 7th Int. Conf. Radiation Shielding*, Bournemouth, 12–16 September 1988, 2, pp. 725–733.
18. BUTLER J. *et al.* A review of the NESTOR shielding and dosimetry improvement programme (NESDIP). *Reactor dosimetry: methods, applications and standardisation*. American Society for Testing and Materials, ASTM STP 1001.
19. COWAN P. *et al.* ARCAS — a facility for the validation of improved gamma-ray shielding methods. *Proc. 7th Int. Conf. Radiation Shielding*, Bournemouth, 12–16 September 1988, 1, pp. 164–172.