CERTIFICATE OF COMPLIANCE NO. 1014

APPENDIX A

TECHNICAL SPECIFICATIONS

FOR THE HI-STORM 100 CASK SYSTEM

TABLE OF CONTENTS

1.0 USE AND APPLICATION 1.1-1
1.1 Definitions 1.1-1
1.2 Logical Connectors 1.2-1
1.3 Completion Times 1.3-1
1.4 Frequency 1.4-1

2.0 ..... 2.0-1

3.0 LIMITING CONDITION FOR OPERATION (LCO) APPLICABILITY 3.0-1
3.0 SURVEILLANCE REQUIREMENT (SR) APPLICABILITY 3.0-2

3.1 SFSC INTEGRITY 3.1.1-1
3.1.1 Multi-Purpose Canister (MPC) 3.1.1-1
3.1.2 SFSC Heat Removal System 3.1.2-1
3.1.3 Fuel Cool-Down 3.1.3-1
3.1.4 Supplemental Cooling System 3.1.4-1

3.2 SFSC RADIATION PROTECTION 3.2.1-1
3.2.1 Deleted 3.2.1-1
3.2.2 TRANSFER CASK SURFACE CONTAMINATION 3.2.2-1
3.2.3 Deleted 3.2.3-1

3.3 SFSC CRITICALITY CONTROL 3.3-1
3.3.1 Boron Concentration 3.3.1-1

Table 3-1 MPC Cavity Drying Limits 3.4-1
Table 3-2 MPC Helium Backfill Limits 3.4-2

4.0 ..... 4.0-1

5.0 ADMINISTRATIVE CONTROLS 5.0-1
5.1 Deleted
5.2 Deleted
5.3 Deleted
5.4 Radioactive Effluent Control Program 5.0-1
5.5 Cask Transport Evaluation Program 5.0-2
5.6 Deleted
5.7 Radiation Protection Program 5.0-5

Table 5-1 TRANSFER CASK and OVERPACK Lifting Requirements 5.0-6

1.0 USE AND APPLICATION

1.1 Definitions

----------NOTE----------
The defined terms of this section appear in capitalized type and are applicable throughout these Technical Specifications and Bases.

Term	Definition
ACTIONS	ACTIONS shall be that part of a Specification that prescribes Required Actions to be taken under designated Conditions within specified Completion Times.
FUEL BUILDING	The FUEL BUILDING is the site-specific power plant facility, governed by the regulations of 10CFR Part 50, where the loaded OVERPACK or TRANSFER CASK is transferred to or from the transporter.
LOADING OPERATIONS	LOADING OPERATIONS include all licensed activities on an OVERPACK or TRANSFER CASK while it is being loaded with fuel assemblies. LOADING OPERATIONS begin when the first fuel assembly is placed in the MPC and end when the OVERPACK or TRANSFER CASK is suspended from or secured on the transporter. LOADING OPERATIONS does not included MPC transfer between the TRANSFER CASK and the OVERPACK.
MULTI-PURPOSE CANISTER (MPC)	MPCs are the sealed spent nuclear fuel canisters which consist of a honeycombed fuel basket contained in a cylindrical canister shell which is welded to a baseplate, lid with welded port cover plates, and closure ring. The MPC provides the confinement boundary for the contained radioactive materials.

(continued)

1.1 Definitions (continued)

OVERPACK	OVERPACKs are the casks which receive and contain the sealed MPCs for interim storage on the ISFSI. They provide gamma and neutron shielding, and provide for ventilated air flow to promote heat transfer from the MPC to the environs. The OVERPACK does not include the TRANSFER CASK.
SPENT FUEL STORAGE CASKS (SFSCs)	SFSCs are containers approved for the storage of spent fuel assemblies at the ISFSI. The HI-STORM 100 SFSC System consists of the OVERPACK and its integral MPC.
STORAGE OPERATIONS	STORAGE OPERATIONS include all licensed activities that are performed at the ISFSI while an SFSC containing spent fuel is sitting on a storage pad within the ISFSI perimeter. STORAGE OPERATIONS does not include MPC transfer between the TRANSFER CASK and the OVERPACK.
TRANSFER CASK	TRANSFER CASKs are containers designed to contain the MPC during and after loading of spent fuel assemblies and to transfer the MPC to or from the OVERPACK. The HI-STORM 100 System employs either the 125-Ton or the 100-Ton HI-TRAC TRANSFER CASK.

(continued)

1.1 Definitions (continued)

TRANSPORT OPERATIONS	TRANSPORT OPERATIONS include all licensed activities performed on an OVERPACK or TRANSFER CASK loaded with one or more fuel assemblies when it is being moved to and from the ISFSI. TRANSPORT OPERATIONS begin when the OVERPACK or TRANSFER CASK is first suspended from or secured on the transporter and end when the OVERPACK or TRANSFER CASK is at its destination and no longer secured on or suspended from the transporter. TRANSPORT OPERATIONS includes transfer of the MPC between the OVERPACK and the TRANSFER CASK.
UNLOADING OPERATIONS	UNLOADING OPERATIONS include all licensed activities on an SFSC to be unloaded of the contained fuel assemblies. UNLOADING OPERATIONS begin when the OVERPACK or TRANSFER CASK is no longer suspended from or secured on the transporter and end when the last fuel assembly is removed from the SFSC. UNLOADING OPERATIONS does not include MPC transfer between the TRANSFER CASK and the OVERPACK.

1.0 USE AND APPLICATION

1.2 Logical Connectors

PURPOSE

The purpose of this section is to explain the meaning of logical connectors.

Logical connectors are used in Technical Specifications (TS) to discriminate between, and yet connect, discrete Conditions, Required Actions, Completion Times, Surveillances, and Frequencies. The only logical connectors that appear in TS are AND and OR. The physical arrangement of these connectors constitutes logical conventions with specific meanings.

BACKGROUND

Several levels of logic may be used to state Required Actions. These levels are identified by the placement (or nesting) of the logical connectors and by the number assigned to each Required Action. The first level of logic is identified by the first digit of the number assigned to a Required Action and the placement of the logical connector in the first level of nesting (i.e., left justified with the number of the Required Action). The successive levels of logic are identified by additional digits of the Required Action number and by successive indentions of the logical connectors.

When logical connectors are used to state a Condition, Completion Time, Surveillance, or Frequency, only the first level of logic is used, and the logical connector is left justified with the statement of the Condition, Completion Time, Surveillance, or Frequency.

(continued)

1.2 Logical Connectors

EXAMPLES

The following examples illustrate the use of logical connectors.

EXAMPLE 1.2-1

ACTIONS

CONDITION	REQUIRED ACTION	COMPLETION TIME
A. LCO not met.	A.1 VERIFY . . . AND A.2 Restore . . .	

In this example the logical connector AND is used to indicate that when in Condition A, both Required Actions A.1 and A.2 must be completed.

(continued)

1.2 Logical Connectors

EXAMPLES (continued)

EXAMPLE 1.2-2

ACTIONS

CONDITION	REQUIRED ACTION	COMPLETION TIME
A. LCO not met.	A.1 Stop . . . OR A.2.1 Verify . . . AND A.2.2.1 Reduce . . . OR A.2.2.2 Perform . . . OR A.3 Remove . . .	

This example represents a more complicated use of logical connectors. Required Actions A.1, A.2, and A.3 are alternative choices, only one of which must be performed as indicated by the use of the logical connector OR and the left justified placement. Any one of these three ACTIONS may be chosen. If A.2 is chosen, then both A.2.1 and A.2.2 must be performed as indicated by the logical connector AND. Required Action A.2.2 is met by performing A.2.2.1 or A.2.2.2. The indented position of the logical connector

OR indicates that A.2.2.1 and A.2.2.2 are alternative choices, only one of which must be performed.

1.0 USE AND APPLICATION

1.3 Completion Times

PURPOSE	The purpose of this section is to establish the Completion Time convention and to provide guidance for its use.
BACKGROUND	Limiting Conditions for Operation (LCOs) specify the lowest functional capability or performance levels of equipment required for safe operation of the facility. The ACTIONS associated with an LCO state Conditions that typically describe the ways in which the requirements of the LCO can fail to be met. Specified with each stated Condition are Required Action(s) and Completion Times(s).
DESCRIPTION	The Completion Time is the amount of time allowed for completing a Required Action. It is referenced to the time of discovery of a situation (e.g., equipment or variable not within limits) that requires entering an ACTIONS Condition unless otherwise specified, providing the HI-STORM 100 System is in a specified condition stated in the Applicability of the LCO. Required Actions must be completed prior to the expiration of the specified Completion Time. An ACTIONS Condition remains in effect and the Required Actions apply until the Condition no longer exists or the HI-STORM 100 System is not within the LCO Applicability. Once a Condition has been entered, subsequent subsystems, components, or variables expressed in the Condition, discovered to be not within limits, will <u>not</u> result in separate entry into the Condition unless specifically stated. The Required Actions of the Condition continue to apply to each additional failure, with Completion Times based on initial entry into the Condition.

(continued)

1.3 Completion Times (continued)

EXAMPLES

The following examples illustrate the use of Completion Times with different types of Conditions and changing Conditions.

EXAMPLE 1.3-1

ACTIONS

CONDITION	REQUIRED ACTION	COMPLETION TIME
B. Required Action and associated Completion Time not met.	B.1 Perform Action B.1	12 hours
	AND	
	B.2 Perform Action B.2	36 hours

Condition B has two Required Actions. Each Required Action has its own separate Completion Time. Each Completion Time is referenced to the time that Condition B is entered.

The Required Actions of Condition B are to complete action B.1 within 12 hours AND complete action B.2 within 36 hours. A total of 12 hours is allowed for completing action B.1 and a total of 36 hours (not 48 hours) is allowed for completing action B.2 from the time that Condition B was entered. If action B.1 is completed within 6 hours, the time allowed for completing action B.2 is the next 30 hours because the total time allowed for completing action B.2 is 36 hours.

(continued)

1.3 Completion Times

EXAMPLES (continued)

EXAMPLE 1.3-2

ACTIONS

CONDITION	REQUIRED ACTION		COMPLETION TIME
A. One system not within limit.	A.1	Restore system to within limit.	7 days
B. Required Action and associated Completion Time not met.	B.1	Complete action B.1.	12 hours
	AND		
	B.2	Complete action B.2.	36 hours

When a system is determined not to meet the LCO, Condition A is entered. If the system is not restored within 7 days, Condition B is also entered and the Completion Time clocks for Required Actions B.1 and B.2 start. If the system is restored after Condition B is entered, Conditions A and B are exited, and therefore, the Required Actions of Condition B may be terminated.

(continued)

1.3 Completion Times

EXAMPLES (continued)

EXAMPLE 1.3-3

ACTIONS

----------NOTE----------
Separate Condition entry is allowed for each component.

CONDITION	REQUIRED ACTION	COMPLETION TIME
A. LCO not met.	A.1 Restore compliance with LCO.	4 hours
B. Required Action and associated Completion Time not met.	B.1 Complete action B.1. AND B.2 Complete action B.2.	6 hours 12 hours

The Note above the ACTIONS table is a method of modifying how the Completion Time is tracked. If this method of modifying how the Completion Time is tracked was applicable only to a specific Condition, the Note would appear in that Condition rather than at the top of the ACTIONS Table.

The Note allows Condition A to be entered separately for each component, and Completion Times tracked on a per component basis. When a component is determined to not meet the LCO, Condition A is entered and its Completion Time starts. If subsequent components are determined to not meet the LCO, Condition A is entered for each component and separate Completion Times start and are tracked for each component.

(continued)

1.3 Completion Times (continued)

IMMEDIATE COMPLETION TIME	When "Immediately" is used as a Completion Time, the Required Action should be pursued without delay and in a controlled manner.

1.0 USE AND APPLICATION

1.4 Frequency

PURPOSE

The purpose of this section is to define the proper use and application of Frequency requirements.

DESCRIPTION

Each Surveillance Requirement (SR) has a specified Frequency in which the Surveillance must be met in order to meet the associated Limiting Condition for Operation (LCO). An understanding of the correct application of the specified Frequency is necessary for compliance with the SR.

The "specified Frequency" is referred to throughout this section and each of the Specifications of Section 3.0, Surveillance Requirement (SR) Applicability. The "specified Frequency" consists of the requirements of the Frequency column of each SR.

Situations where a Surveillance could be required (i.e., its Frequency could expire), but where it is not possible or not desired that it be performed until sometime after the associated LCO is within its Applicability, represent potential SR 3.0.4 conflicts. To avoid these conflicts, the SR (i.e., the Surveillance or the Frequency) is stated such that it is only "required" when it can be and should be performed. With an SR satisfied, SR 3.0.4 imposes no restriction.

(continued)

1.4 Frequency (continued)

EXAMPLES

The following examples illustrate the various ways that Frequencies are specified.

EXAMPLE 1.4-1

SURVEILLANCE REQUIREMENTS

SURVEILLANCE	FREQUENCY
Verify pressure within limit	12 hours

Example 1.4-1 contains the type of SR most often encountered in the Technical Specifications (TS). The Frequency specifies an interval (12 hours) during which the associated Surveillance must be performed at least one time. Performance of the Surveillance initiates the subsequent interval. Although the Frequency is stated as 12 hours, an extension of the time interval to 1.25 times the interval specified in the Frequency is allowed by SR 3.0.2 for operational flexibility. The measurement of this interval continues at all times, even when the SR is not required to be met per SR 3.0.1 (such as when the equipment or variables are outside specified limits, or the facility is outside the Applicability of the LCO). If the interval specified by SR 3.0.2 is exceeded while the facility is in a condition specified in the Applicability of the LCO, the LCO is not met in accordance with SR 3.0.1.

If the interval as specified by SR 3.0.2 is exceeded while the facility is not in a condition specified in the Applicability of the LCO for which performance of the SR is required, the Surveillance must be performed within the Frequency requirements of SR 3.0.2 prior to entry into the specified condition. Failure to do so would result in a violation of SR 3.0.4

(continued)

1.4 Frequency

EXAMPLES
(continued)

EXAMPLE 1.4-2

SURVEILLANCE REQUIREMENTS

SURVEILLANCE	FREQUENCY
Verify flow is within limits.	Once within 12 hours prior to starting activity AND 24 hours thereafter

Example 1.4-2 has two Frequencies. The first is a one time performance Frequency, and the second is of the type shown in Example 1.4-1. The logical connector "AND" indicates that both Frequency requirements must be met. Each time the example activity is to be performed, the Surveillance must be performed within 12 hours prior to starting the activity.

The use of "once" indicates a single performance will satisfy the specified Frequency (assuming no other Frequencies are connected by "AND"). This type of Frequency does not qualify for the 25% extension allowed by SR 3.0.2.

"Thereafter" indicates future performances must be established per SR 3.0.2, but only after a specified condition is first met (i.e., the "once" performance in this example). If the specified activity is canceled or not performed, the measurement of both intervals stops. New intervals start upon preparing to restart the specified activity.

2.0

This section is intentionally left blank

3.0 LIMITING CONDITIONS FOR OPERATION (LCO) APPLICABILITY

LCO 3.0.1	LCOs shall be met during specified conditions in the Applicability, except as provided in LCO 3.0.2.
LCO 3.0.2	Upon discovery of a failure to meet an LCO, the Required Actions of the associated Conditions shall be met, except as provided in LCO 3.0.5. If the LCO is met or is no longer applicable prior to expiration of the specified Completion Time(s), completion of the Required Action(s) is not required, unless otherwise stated.
LCO 3.0.3	Not applicable.
LCO 3.0.4	When an LCO is not met, entry into a specified condition in the Applicability shall not be made except when the associated ACTIONS to be entered permit continued operation in the specified condition in the Applicability for an unlimited period of time. This Specification shall not prevent changes in specified conditions in the Applicability that are required to comply with ACTIONS or that are related to the unloading of an SFSC.
LCO 3.0.5	Equipment removed from service or not in service in compliance with ACTIONS may be returned to service under administrative control solely to perform testing required to demonstrate it meets the LCO or that other equipment meets the LCO. This is an exception to LCO 3.0.2 for the system returned to service under administrative control to perform the testing.

3.0 SURVEILLANCE REQUIREMENT (SR) APPLICABILITY

SR 3.0.1

SRs shall be met during the specified conditions in the Applicability for individual LCOs, unless otherwise stated in the SR. Failure to meet a Surveillance, whether such failure is experienced during the performance of the Surveillance or between performances of the Surveillance, shall be failure to meet the LCO. Failure to perform a Surveillance within the specified Frequency shall be failure to meet the LCO except as provided in SR 3.0.3. Surveillances do not have to be performed on equipment or variables outside specified limits.

SR 3.0.2

The specified Frequency for each SR is met if the Surveillance is performed within 1.25 times the interval specified in the Frequency, as measured from the previous performance or as measured from the time a specified condition of the Frequency is met.

For Frequencies specified as "once," the above interval extension does not apply. If a Completion Time requires periodic performance on a "once per..." basis, the above Frequency extension applies to each performance after the initial performance.

Exceptions to this Specification are stated in the individual Specifications.

SR 3.0.3

If it is discovered that a Surveillance was not performed within its specified Frequency, then compliance with the requirement to declare the LCO not met may be delayed, from the time of discovery, up to 24 hours or up to the limit of the specified Frequency, whichever is less. This delay period is permitted to allow performance of the Surveillance.

If the Surveillance is not performed within the delay period, the LCO must immediately be declared not met, and the applicable Condition(s) must be entered.

(continued)

SR 3.0.3 (continued)	When the Surveillance is performed within the delay period and the Surveillance is not met, the LCO must immediately be declared not met, and the applicable Condition(s) must be entered.
SR 3.0.4	Entry into a specified condition in the Applicability of an LCO shall not be made unless the LCO's Surveillances have been met within their specified Frequency. This provision shall not prevent entry into specified conditions in the Applicability that are required to comply with Actions or that are related to the unloading of an SFSC.

3.1 SFSC INTEGRITY

3.1.1 Multi-Purpose Canister (MPC)

LCO 3.1.1 The MPC shall be dry and helium filled.

APPLICABILITY: During TRANSPORT OPERATIONS and STORAGE OPERATIONS.

ACTIONS

----------NOTE----------
Separate Condition entry is allowed for each MPC.

CONDITION	REQUIRED ACTION	COMPLETION TIME
A. MPC cavity vacuum drying pressure or demoisturizer exit gas temperature limit not met.	A.1 Perform an engineering evaluation to determine the quantity of moisture left in the MPC. <u>AND</u> A.2 Develop and initiate corrective actions necessary to return the MPC to an analyzed condition.	7 days 30 days
B. MPC helium backfill limit not met.	B.1 Perform an engineering evaluation to determine the impact of helium differential. <u>AND</u> B.2 Develop and initiate corrective actions necessary to return the MPC to an analyzed condition.	72 hours 14 days

ACTIONS
(continued)

CONDITION	REQUIRED ACTION	COMPLETION TIME
C. MPC helium leak rate limit for vent and drain port cover plate welds not met.	C.1 Perform an engineering evaluation to determine the impact of increased helium leak rate on heat removal capability and offsite dose. <u>AND</u> C.2 Develop and initiate corrective actions necessary to return the MPC to an analyzed condition.	24 hours 7 days
D. Required Actions and associated Completion Times not met.	D.1 Remove all fuel assemblies from the SFSC.	30 days

SURVEILLANCE REQUIREMENTS

SURVEILLANCE		FREQUENCY
SR 3.1.1.1	Verify that the MPC cavity has been dried in accordance with the applicable limits in Table 3-1.	Once, prior to TRANSPORT OPERATIONS
SR 3.1.1.2	Verify MPC helium backfill quantity is within the limit specified in Table 3-2 for the applicable MPC model.	Once, prior to TRANSPORT OPERATIONS

3.1 SFSC INTEGRITY

3.1.2 SFSC Heat Removal System

LCO 3.1.2 The SFSC Heat Removal System shall be operable

APPLICABILITY: During STORAGE OPERATIONS.

ACTIONS

----------NOTE----------
Separate Condition entry is allowed for each SFSC.

CONDITION	REQUIRED ACTION	COMPLETION TIME
A. SFSC Heat Removal System inoperable.	A.1 Restore SFSC Heat Removal System to operable status.	8 hours
B. Required Action A.1 and associated Completion Time not met.	B.1 Measure SFSC dose rates in accordance with the Radiation Protection Program.	Immediately and once per 12 hours thereafter
	AND	
	B.2.1 Restore SFSC Heat Removal System to operable status.	64 hours
	OR	
	B.2.2 Transfer the MPC into a TRANSFER CASK.	64 hours

SURVEILLANCE REQUIREMENTS

SURVEILLANCE		FREQUENCY
SR 3.1.2.1	Verify all OVERPACK inlet and outlet air ducts are free of blockage.	24 hours
	OR	
	For OVERPACKS with installed temperature monitoring equipment, verify that the difference between the average OVERPACK air outlet temperature and ISFSI ambient temperature is ≤ 126°F.	24 hours

3.1 SFSC INTEGRITY

3.1.3 Fuel Cool-Down

LCO 3.1.3 The MPC cavity bulk helium temperature shall be ≤ 200° F

----------NOTE----------
The LCO is only applicable to wet UNLOADING OPERATIONS.

APPLICABILITY: UNLOADING OPERATIONS prior to re-flooding.

ACTIONS

----------NOTE----------
Separate Condition entry is allowed for each MPC.

CONDITION	REQUIRED ACTION	COMPLETION TIME
A. MPC cavity bulk helium temperature not within limit.	A.1 Establish MPC cavity bulk helium temperature within limit.	Prior to initiating MPC re-flooding operations
	AND	
	A.2 Ensure adequate heat transfer from the MPC to the environment.	Immediately

SURVEILLANCE REQUIREMENTS

SURVEILLANCE		FREQUENCY
SR 3.1.3.1	Ensure via analysis or direct measurement of MPC exit gas temperature that MPC cavity bulk helium temperature is within limit.	Prior to MPC re-flooding operations.

3.1 SFSC INTEGRITY

3.1.4 Supplemental Cooling System

LCO 3.1.4 The Supplemental Cooling System (SCS) shall be operable

----------NOTE----------
Upon reaching steady state operation, the SCS may be temporarily disabled for a short duration (≤ 7 hours) to facilitate necessary operational evolutions, such as movement of the TRANSFER CASK through a door way, or other similar operation.

APPLICABILITY: This LCO is applicable when the loaded MPC is in the TRANSFER CASK and:

a. Within 4 hours of the completion of MPC drying operations in accordance with LCO 3.1.1 or within 4 hours of transferring the MPC into the TRANSFER CASK if the MPC is to be unloaded

AND

b. The MPC contains one or more fuel assemblies with an average burnup > 45,000 MWD/MTU

ACTIONS

CONDITION	REQUIRED ACTION	COMPLETION TIME
A. SFSC Supplemental Cooling System inoperable.	A.1 Restore SFSC Supplemental Cooling System to operable status.	7 days
B. Required Action A.1 and associated Completion Time not met.	B.1 Remove all fuel assemblies from the SFSC.	30 days

SURVEILLANCE REQUIREMENTS

SURVEILLANCE		FREQUENCY
SR 3.1.4.1	Verify Supplemental Cooling System is operable.	2 hours

3.2 Deleted.

3.2.1 Deleted.

LCO 3.2.1 Deleted.

3.2 SFSC RADIATION PROTECTION.

3.2.2 TRANSFER CASK Surface Contamination.

LCO 3.2.2 Removable contamination on the exterior surfaces of the TRANSFER CASK and accessible portions of the MPC shall each not exceed:

a. 1000 dpm/100 cm^2 from beta and gamma sources

b. 20 dpm/100 cm^2 from alpha sources.

----------NOTE----------
This LCO is not applicable to the TRANSFER CASK if MPC transfer operations occur inside the FUEL BUILDING.

APPLICABILITY: During TRANSPORT OPERATIONS.

ACTIONS

----------NOTE----------
Separate Condition entry is allowed for each TRANSFER CASK.

CONDITION	REQUIRED ACTION	COMPLETION TIME
A. TRANSFER CASK or MPC removable surface contamination limits not met.	A.1 Restore removable surface contamination to within limits.	7 days

SURVEILLANCE REQUIREMENTS

SURVEILLANCE		FREQUENCY
SR 3.2.2.1	Verify that the removable contamination on the exterior surfaces of the TRANSFER CASK and accessible portions of the MPC containing fuel is within limits.	Once, prior to TRANSPORT OPERATIONS

3.2 Deleted.

3.2.3 Deleted.

LCO 3.2.3 Deleted.

3.3 SFSC CRITICALITY CONTROL

3.3.1 Boron Concentration

LCO 3.3.1 As required by CoC Appendix B, Table 2.1-2, the concentration of boron in the water in the MPC shall meet the following limits for the applicable MPC model and the most limiting fuel assembly array/class and classification to be stored in the MPC:

a. MPC-24 with one or more fuel assemblies having an initial enrichment greater than the value in Table 2.1-2 for no soluble boron credit and ≤ 5.0 wt% ^{235}U: ≥ 400 ppmb

b. MPC-24E or MPC-24EF (all INTACT FUEL ASSEMBLIES) with one or more fuel assemblies having an initial enrichment greater than the value in Table 2.1-2 for no soluble boron credit and ≤ 5.0 wt% ^{235}U: ≥ 300 ppmb

c. Deleted.

d. Deleted.

e. MPC-24E or MPC-24EF (one or more DAMAGED FUEL ASSEMBLIES or FUEL DEBRIS) with one or more fuel assemblies having an initial enrichment > 4.0 wt% ^{235}U and ≤ 5.0 wt% ^{235} U: ≥ 600 ppmb

f. MPC-32/32F: Minimum soluble boron concentration as required by the table below.

Array/Class	All INTACT FUEL ASSEMBLIES		One or more DAMAGED FUEL ASSEMBLIES or FUEL DEBRIS	
	Initial Enrichment ≤ 4.1 wt% ^{235} U (ppmb)	Initial Enrichment > 4.1 wt% and ≤ 5.0 wt% ^{235} U (ppmb)	Initial Enrichment ≤ 4.1 wt% ^{235} U (ppmb)	Initial Enrichment > 4.1 wt% and ≤ 5.0 wt% ^{235} U (ppmb)
14x14A/B/C/D/E	1,300	1,900	1,500	2,300
15x15A/B/C/G	1,800	2,500	1,900	2,700
15x15D/E/F/H	1,900	2,600	2,100	2,900
16x16A	1,300	1,900	1,500	2,300
17x17A/B/C	1,900	2,600	2,100	2,900

APPLICABILITY: During PWR fuel LOADING OPERATIONS with fuel and water in the MPC

AND

During PWR fuel UNLOADING OPERATIONS with fuel and water in the MPC.

ACTIONS

----------NOTE----------
Separate Condition entry is allowed for each MPC.

CONDITION	REQUIRED ACTION	COMPLETION TIME
A. Boron concentration not within limit.	A.1 Suspend LOADING OPERATIONS or UNLOADING OPERATIONS.	Immediately
	AND	
	A.2 Suspend positive reactivity additions.	Immediately
	AND	
	A.3 Initiate action to restore boron concentration to within limit.	Immediately

SURVEILLANCE REQUIREMENTS

SURVEILLANCE	FREQUENCY
----------NOTE---------- This surveillance is only required to be performed if the MPC is submerged in water or if water is to be added to, or recirculated through the MPC. ----------	Once, within 4 hours prior to entering the Applicability of this LCO.
SR 3.3.1.1 Verify boron concentration is within the applicable limit using two independent measurements.	AND Once per 48 hours thereafter.

Table 3-1
MPC Cavity Drying Limits

Fuel Burnup (MWD/MTU)	MPC Heat Load (kW)	Method of Moisture Removal (Notes 1 and 2)
All Assemblies ≤ 45,000	≤ 28.74	VDS or FHD
One or more assemblies > 45,000	≤ 28.74	FHD

Notes:

1. VDS means Vacuum Drying System. The acceptance criterion for VDS is MPC cavity pressure shall be ≤ 3 torr for ≥ 30 minutes.

2. FHD means Forced Helium Dehydration System. The acceptance criterion for the FHD System is gas temperature exiting the demoisturizer shall be ≤ 21°F for ≥ 30 minutes or gas dew point exiting the MPC shall be ≤ 22.9°F for ≥ 30 minutes .

Table 3-2
MPC Helium Backfill Limits[1]

MPC MODEL	LIMIT
MPC-24/24E/24EF	
i. Cask Heat Load ≤ 27.77 kW (MPC-24) or ≤ 28.17 kW (MPC-24E/EF)	0.1212 +0/-10% g-moles/l OR ≥ 29.3 psig and ≤ 33.3 psig
MPC-68/68F/68FF	
i. Cask Heat Load ≤ 28.19 kW	0.1218 +0/-10% g-moles/l OR ≥ 29.3 psig and ≤ 33.3 psig
MPC-32/32F	
Cask Heat Load ≤ 28.74 kW	≥ 29.3 psig and ≤ 33.3 psig

[1] Helium used for backfill of MPC shall have a purity of ≥ 99.995%. Pressure range is at a reference temperature of 70°F

4.0

This section is intentionally left blank

5.0 ADMINISTRATIVE CONTROLS AND PROGRAMS

The following programs shall be established, implemented and maintained.

5.1 Deleted.

5.2 Deleted.

5.3 Deleted.

5.4 Radioactive Effluent Control Program

This program implements the requirements of 10 CFR 72.44(d).

a. The HI-STORM 100 Cask System does not create any radioactive materials or have any radioactive waste treatment systems. Therefore, specific operating procedures for the control of radioactive effluents are not required. Specification 3.1.1, Multi-Purpose Canister (MPC), provides assurance that there are not radioactive effluents from the SFSC.

b. This program includes an environmental monitoring program. Each general license user may incorporate SFSC operations into their environmental monitoring programs for 10 CFR Part 50 operations.

c. An annual report shall be submitted pursuant to 10 CFR 72.44(d)(3).

(continued)

5.5 Cask Transport Evaluation Program

This program provides a means for evaluating various transport configurations and transport route conditions to ensure that the design basis drop limits are met. For lifting of the loaded TRANSFER CASK or OVERPACK using devices which are integral to a structure governed by 10 CFR Part 50 regulations, 10 CFR 50 requirements apply. This program is not applicable when the TRANSFER CASK or OVERPACK is in the FUEL BUILDING or is being handled by a device providing support from underneath (i.e., on a rail car, heavy haul trailer, air pads, etc.).

Pursuant to 10 CFR 72.212, this program shall evaluate the site-specific transport route conditions.

a. For free-standing OVERPACKS and the TRANSFER CASK, the following requirements apply:

1. The lift height above the transport route surface(s) shall not exceed the limits in Table 5-1 except as provided for in Specification 5.5.a.2. Also, the program shall ensure that the transport route conditions (i.e., surface hardness and pad thickness) are equivalent to or less limiting than either Set A or Set B in HI-STORM FSAR Table 2.2.9.

2. For site-specific transport route surfaces that are not bounded by either the Set A or Set B parameters of FSAR Table 2.2.9, the program may determine lift heights by analysis based on the site-specific conditions to ensure that the impact loading due to design basis drop events does not exceed 45 g's at the top of the MPC fuel basket. These alternative analyses shall be commensurate with the drop analyses described in the Final Safety Analysis Report for the HI-STORM 100 Cask System. The program shall ensure that these alternative analyses are documented and controlled.

(continued)

5.5 Cask Transport Evaluation Program (continued)

3. The TRANSFER CASK or OVERPACK, when loaded with spent fuel, may be lifted to any height necessary during transportation between the FUEL BUILDING and the CTF and/or ISFSI pad, provided the lifting device is designed in accordance with ANSI N14.6 and has redundant drop protection features.

4. The TRANSFER CASK and MPC, when loaded with spent fuel, may be lifted to those heights necessary to perform cask handling operations, including MPC transfer, provided the lifts are made with structures and components designed in accordance with the criteria specified in Section 3.5 of Appendix B to Certificate of Compliance No. 1014, as applicable.

b. For the transport of OVERPACKS to be anchored to the ISFSI pad, the following requirements apply:

1. Except as provided in 5.5.b.2, user shall determine allowable OVERPACK lift height limit(s) above the transport route surface(s) based on site-specific transport route conditions. The lift heights shall be determined by evaluation or analysis, based on limiting the design basis cask deceleration during a postulated drop event to $\leq$ 45 g's at the top of the MPC fuel basket. Evaluations and/or analyses shall be performed using methodologies consistent with those in the HI-STORM 100 FSAR.

2. The OVERPACK, when loaded with spent fuel, may be lifted to any height necessary during transportation between the FUEL BUILDING and the CTF and/or ISFSI pad provided the lifting device is designed in accordance with ANSI N14.6 and has redundant drop protection features.

(continued)

5.5 Cask Transport Evaluation Program (continued)

Table 5-1

TRANSFER CASK and Free-Standing OVERPACK Lifting Requirements

ITEM	ORIENTATION	LIFTING HEIGHT LIMIT (in.)
TRANSFER CASK	Horizontal	42 (Notes 1 and 2)
TRANSFER CASK	Vertical	None Established (Note 2)
OVERPACK	Horizontal	Not Permitted
OVERPACK	Vertical	11 (Note 3)

Notes:
1. To be measured from the lowest point on the TRANSFER CASK (i.e., the bottom edge of the cask/lid assemblage)
2. See Technical Specification 5.5.a.3 and 4
3. See Technical Specification 5.5.a.3.

(continued)

5.6 Deleted.

5.7 Radiation Protection Program

5.7.1 Each cask user shall ensure that the Part 50 radiation protection program appropriately addresses dry storage cask loading and unloading, as well as ISFSI operations, including transport of the loaded OVERPACK or TRANSFER CASK outside of facilities governed by 10 CFR Part 50. The radiation protection program shall include appropriate controls for direct radiation and contamination, ensuring compliance with applicable regulations, and implementing actions to maintain personnel occupational exposures As Low As Reasonably Achievable (ALARA). The actions and criteria to be included in the program are provided below.

5.7.2 As part of its evaluation pursuant to 10 CFR 72.212(b)(2)(i)(C), the licensee shall perform an analysis to confirm that the dose limits of 10 CFR 72.104(a) will be satisfied under the actual site conditions and ISFSI configuration, considering the planned number of casks to be deployed and the cask contents.

5.7.3 Based on the analysis performed pursuant to Section 5.7.2, the licensee shall establish individual cask surface dose rate limits for the HI-TRAC TRANSFER CASK and the HI-STORM OVERPACK to be used at the site. Total (neutron plus gamma) dose rate limits shall be established at the following locations:

a. The top of the TRANSFER CASK and the OVERPACK.
b. The side of the TRANSFER CASK and OVERPACK
c. The inlet and outlet ducts on the OVERPACK

5.7.4 Notwithstanding the limits established in Section 5.7.3, the measured dose rates on a loaded OVERPACK shall not exceed the following values:

a. 20 mrem/hr (gamma + neutron) on the top of the OVERPACK
b. 110 mrem/hr (gamma + neutron) on the side of the OVERPACK, excluding inlet and outlet ducts

5.7.5 The licensee shall measure the TRANSFER CASK and OVERPACK surface neutron and gamma dose rates as described in Section 5.7.8 for comparison against the limits established in Section 5.7.3 or Section 5.7.4, whichever are lower.

5.7 Radiation Protection Program (cont'd)

5.7.6 If the measured surface dose rates exceed the lower of the two limits established in Section 5.7.3 or Section 5.7.4, the licensee shall:

a. Administratively verify that the correct contents were loaded in the correct fuel storage cell locations.
b. Perform a written evaluation to verify whether placement of the as-loaded OVERPACK at the ISFSI will cause the dose limits of 10 CFR 72.104 to be exceeded.
c. Perform a written evaluation within 30 days to determine why the surface dose rate limits were exceeded.

5.7.7 If the evaluation performed pursuant to Section 5.7.6 shows that the dose limits of 10 CFR 72.104 will be exceeded, the OVERPACK shall not be placed into storage until appropriate corrective action is taken to ensure the dose limits are not exceeded.

5.7.8 TRANSFER CASK and OVERPACK surface dose rates shall be measured at approximately the following locations:

a. A minimum of four (4) dose rate measurements shall be taken on the side of the TRANSFER CASK approximately at the cask mid-height plane. The measurement locations shall be approximately 90 degrees apart around the circumference of the cask. Dose rates shall be measured between the radial ribs of the water jacket.

b. A minimum of four (4) TRANSFER CASK top lid dose rates shall be measured at locations approximately half way between the edge of the hole in the top lid and the outer edge of the top lid, 90 degrees apart around the circumference of the top lid.

c. A minimum of twelve (12) dose rate measurements shall be taken on the side of the OVERPACK in three sets of four measurements. One measurement set shall be taken approximately at the cask mid-height plane, 90 degrees apart around the circumference of the cask. The second and third measurement sets shall be taken approximately 60 inches above and below the mid-height plane, respectively, also 90 degrees apart around the circumference of the cask.

d. A minimum of five (5) dose rate measurements shall be taken on the top of the OVERPACK. One dose rate measurement shall be taken at approximately the center of the lid and four measurements shall be taken at locations on the top concrete shield, approximately half way between the center and the edge of the top concrete shield, 90 degrees apart around the circumference of the lid.

5.7 Radiation Protection Program (cont'd)

e. A dose rate measurement shall be taken on contact at the surface of each inlet and outlet vent duct screen.

CERTIFICATE OF COMPLIANCE NO. 1014

APPENDIX B

APPROVED CONTENTS AND DESIGN FEATURES

FOR THE HI-STORM 100 CASK SYSTEM

TABLE OF CONTENTS

1.0 DEFINITIONS 1-1

2.0 APPROVED CONTENTS 2-1

3.0 DESIGN FEATURES.....3-1

3.1 Site 3-1
3.2 Design Features Important for Criticality Control 3-1
3.3 Codes and Standards 3-2
3.4 Site Specific Parameters and Analyses 3-8
3.5 Cask Transfer Facility (CTF) 3-12
3.6 Forced Helium Dehydration System 3-15

Table 3-1 List of ASME Code Alternatives for HI-STORM 100 System 3-3
Table 3-2 Representative DBE Acceleration Values to Prevent HI-STORM 100 Sliding (μ = 0.53) 3-8
Table 3-3 Load Combinations and Service Condition Definitions For the CTF Structure 3-14

1.0 Definitions

----------NOTE----------
The defined terms of this section appear in capitalized type and are applicable throughout these Technical Specifications and Bases.

Term	Definition
CASK TRANSFER FACILITY (CTF)	The CASK TRANSFER FACILITY includes the following components and equipment: (1) a Cask Transfer Structure used to stabilize the TRANSFER CASK and MPC during lifts involving spent fuel not bounded by the regulations of 10 CFR Part 50, and (2) Either a stationary lifting device or a mobile lifting device used in concert with the stationary structure to lift the OVERPACK, TRANSFER CASK, and MPC
DAMAGED FUEL ASSEMBLY	DAMAGED FUEL ASSEMBLIES are fuel assemblies with known or suspected cladding defects, as determined by a review of records, greater than pinhole leaks or hairline cracks, empty fuel rod locations that are not filled with dummy fuel rods, or those that cannot be handled by normal means. Fuel assemblies that cannot be handled by normal means due to fuel cladding damage are considered FUEL DEBRIS.
DAMAGED FUEL CONTAINER (DFC)	DFCs are specially designed enclosures for DAMAGED FUEL ASSEMBLIES or FUEL DEBRIS which permit gaseous and liquid media to escape while minimizing dispersal of gross particulates. DFCs authorized for use in the HI-STORM 100 System are as follows: 1. Holtec Dresden Unit 1/Humboldt Bay design 2. Transnuclear Dresden Unit 1 design 3. Holtec Generic BWR design 4. Holtec Generic PWR design
FUEL DEBRIS	FUEL DEBRIS is ruptured fuel rods, severed rods, loose fuel pellets or fuel assemblies with known or suspected defects which cannot be handled by normal means due to fuel cladding damage.

(continued)

1.0 Definitions (continued)

INTACT FUEL ASSEMBLY	INTACT FUEL ASSEMBLIES are fuel assemblies without known or suspected cladding defects greater than pinhole leaks or hairline cracks and which can be handled by normal means. Fuel assemblies without fuel rods in fuel rod locations shall not be classified as INTACT FUEL ASSEMBLIES unless dummy fuel rods are used to displace an amount of water greater than or equal to that displaced by the fuel rod(s).
LOADING OPERATIONS	LOADING OPERATIONS include all licensed activities on an OVERPACK or TRANSFER CASK while it is being loaded with fuel assemblies. LOADING OPERATIONS begin when the first fuel assembly is placed in the MPC and end when the OVERPACK or TRANSFER CASK is suspended from or secured on the transporter. LOADING OPERATIONS does not included MPC transfer between the TRANSFER CASK and the OVERPACK.
MINIMUM ENRICHMENT	MINIMUM ENRICHMENT is the minimum assembly average enrichment. Natural uranium blankets are not considered in determining minimum enrichment.
MULTI-PURPOSE CANISTER (MPC)	MPCs are the sealed spent nuclear fuel canisters which consist of a honeycombed fuel basket contained in a cylindrical canister shell which is welded to a baseplate, lid with welded port cover plates, and closure ring. The MPC provides the confinement boundary for the contained radioactive materials.
NON-FUEL HARDWARE	NON-FUEL HARDWARE is defined as Burnable Poison Rod Assemblies (BPRAs), Thimble Plug Devices (TPDs), Control Rod Assemblies (CRAs), Axial Power Shaping Rods (APSRs), Wet Annular Burnable Absorbers (WABAs), Rod Cluster Control Assemblies (RCCAs), Control Element Assemblies (CEAs), water displacement guide tube plugs, orifice rod assemblies, and vibration suppressor inserts.
OVERPACK	OVERPACKs are the casks which receive and contain the sealed MPCs for interim storage on the ISFSI. They provide gamma and neutron shielding, and provide for ventilated air flow to promote heat transfer from the MPC to the environs. The OVERPACK does not include the TRANSFER CASK.

(continued)

1.0 Definitions (continued)

PLANAR-AVERAGE INITIAL ENRICHMENT	PLANAR-AVERAGE INITIAL ENRICHMENT is the average of the distributed fuel rod initial enrichments within a given axial plane of the assembly lattice.
SPENT FUEL STORAGE CASKS (SFSCs)	An SFSC is a container approved for the storage of spent fuel assemblies at the ISFSI. The HI-STORM 100 SFSC System consists of the OVERPACK and its integral MPC.
TRANSFER CASK	TRANSFER CASKs are containers designed to contain the MPC during and after loading of spent fuel assemblies and to transfer the MPC to or from the OVERPACK. The HI-STORM 100 System employs either the 125-Ton or the 100-Ton HI-TRAC TRANSFER CASK.
TRANSPORT OPERATIONS	TRANSPORT OPERATIONS include all licensed activities performed on an OVERPACK or TRANSFER CASK loaded with one or more fuel assemblies when it is being moved to and from the ISFSI. TRANSPORT OPERATIONS begin when the OVERPACK or TRANSFER CASK is first suspended from or secured on the transporter and end when the OVERPACK or TRANSFER CASK is at its destination and no longer secured on or suspended from the transporter. TRANSPORT OPERATIONS include transfer of the MPC between the OVERPACK and the TRANSFER CASK.
UNLOADING OPERATIONS	UNLOADING OPERATIONS include all licensed activities on an SFSC to be unloaded of the contained fuel assemblies. UNLOADING OPERATIONS begin when the OVERPACK or TRANSFER CASK is no longer suspended from or secured on the transporter and end when the last fuel assembly is removed from the SFSC. UNLOADING OPERATIONS does not include MPC transfer between the TRANSFER CASK and the OVERPACK.
ZR	ZR means any zirconium-based fuel cladding or fuel channel material authorized for use in a commercial nuclear power plant reactor.

2.0 APPROVED CONTENTS

2.1 Fuel Specifications and Loading Conditions

2.1.1 Fuel To Be Stored In The HI-STORM 100 SFSC System

a. INTACT FUEL ASSEMBLIES, DAMAGED FUEL ASSEMBLIES, FUEL DEBRIS, and NON-FUEL HARDWARE meeting the limits specified in Table 2.1-1 and other referenced tables may be stored in the HI-STORM 100 SFSC System.

b. For MPCs partially loaded with stainless steel clad fuel assemblies, all remaining fuel assemblies in the MPC shall meet the decay heat generation limit for the stainless steel clad fuel assemblies.

c. For MPCs partially loaded with DAMAGED FUEL ASSEMBLIES or FUEL DEBRIS, all remaining ZR clad INTACT FUEL ASSEMBLIES in the MPC shall meet the decay heat generation limits for the DAMAGED FUEL ASSEMBLIES. This requirement applies only to uniform fuel loading.

d. For MPCs partially loaded with array/class 6x6A, 6x6B, 6x6C, 7x7A, or 8x8A fuel assemblies, all remaining ZR clad INTACT FUEL ASSEMBLIES in the MPC shall meet the decay heat generation limits for the 6x6A, 6x6B, 6x6C, 7x7A and 8x8A fuel assemblies.

e. All BWR fuel assemblies may be stored with or without ZR channels with the exception of array/class 10x10D and 10x10E fuel assemblies, which may be stored with or without ZR or stainless steel channels.

2.1.2 Uniform Fuel Loading

Any authorized fuel assembly may be stored in any fuel storage location, subject to other restrictions related to DAMAGED FUEL, FUEL DEBRIS, and NON-FUEL HARDWARE specified in the CoC.

(continued)

2.0 Approved Contents

2.1 Fuel Specifications and Loading Conditions (cont'd)

2.1.3 Regionalized Fuel Loading

Users may choose to store fuel using regionalized loading in lieu of uniform loading to allow higher heat emitting fuel assemblies to be stored than would otherwise be able to be stored using uniform loading. Regionalized loading is limited to those fuel assemblies with ZR cladding. Figures 2.1-1 through 2.1-4 define the regions for the MPC-24, MPC-24E, MPC-24EF, MPC-32, MPC-32F, MPC-68, and MPC-68FF models, respectively[1]. Fuel assembly burnup, decay heat, and cooling time limits for regionalized loading are specified in Section 2.4.2. Fuel assemblies used in regionalized loading shall meet all other applicable limits specified in Tables 2.1-1 through 2.1-3.

2.2 Violations

If any Fuel Specifications or Loading Conditions of 2.1 are violated, the following actions shall be completed:

2.2.1 The affected fuel assemblies shall be placed in a safe condition.

2.2.2 Within 24 hours, notify the NRC Operations Center.

2.2.3 Within 30 days, submit a special report which describes the cause of the violation, and actions taken to restore compliance and prevent recurrence.

---

[1] These figures are only intended to distinguish the fuel loading regions. Other details of the basket design are illustrative and may not reflect the actual basket design details. The design drawings should be consulted for basket design details.

LEGEND:

REGION 1:

REGION 2:

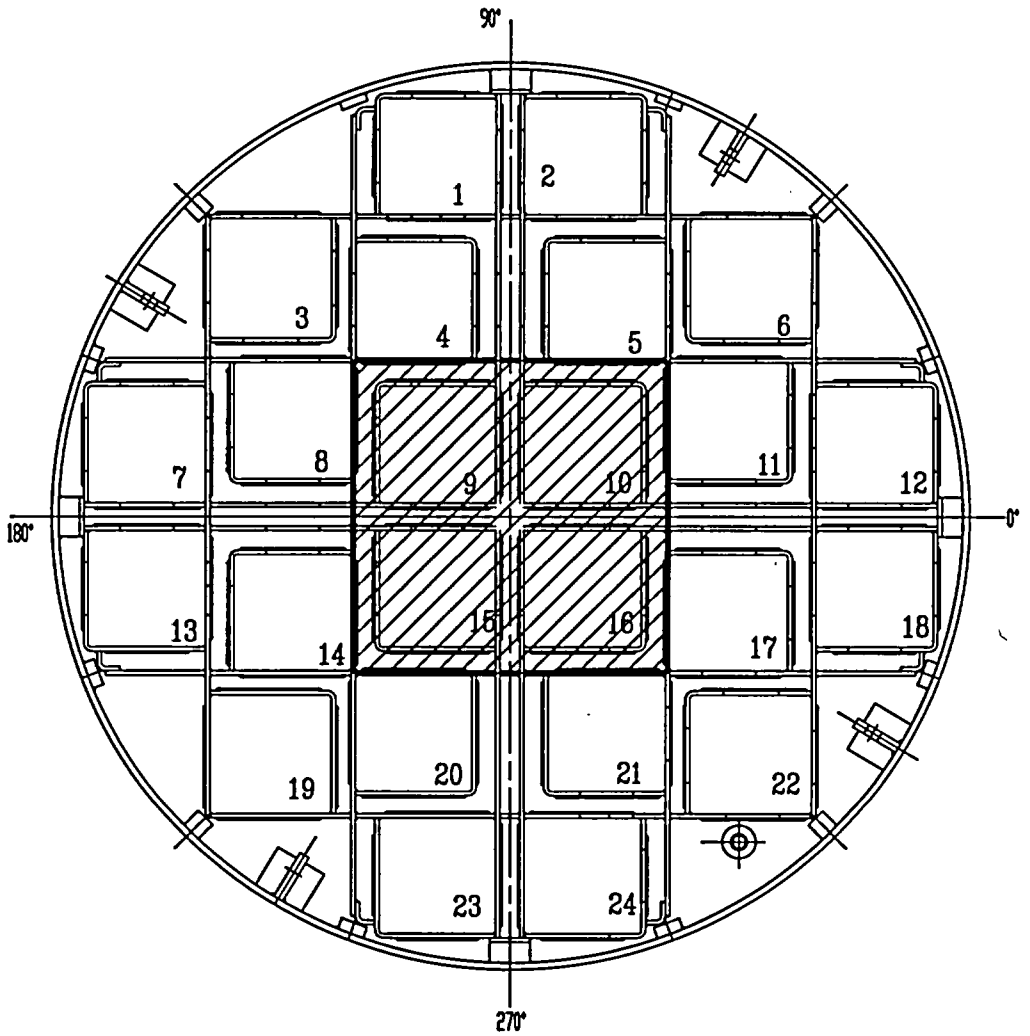

FIGURE 2.1-1
FUEL LOADING REGIONS - MPC-24

LEGEND:

REGION 1:

REGION 2:

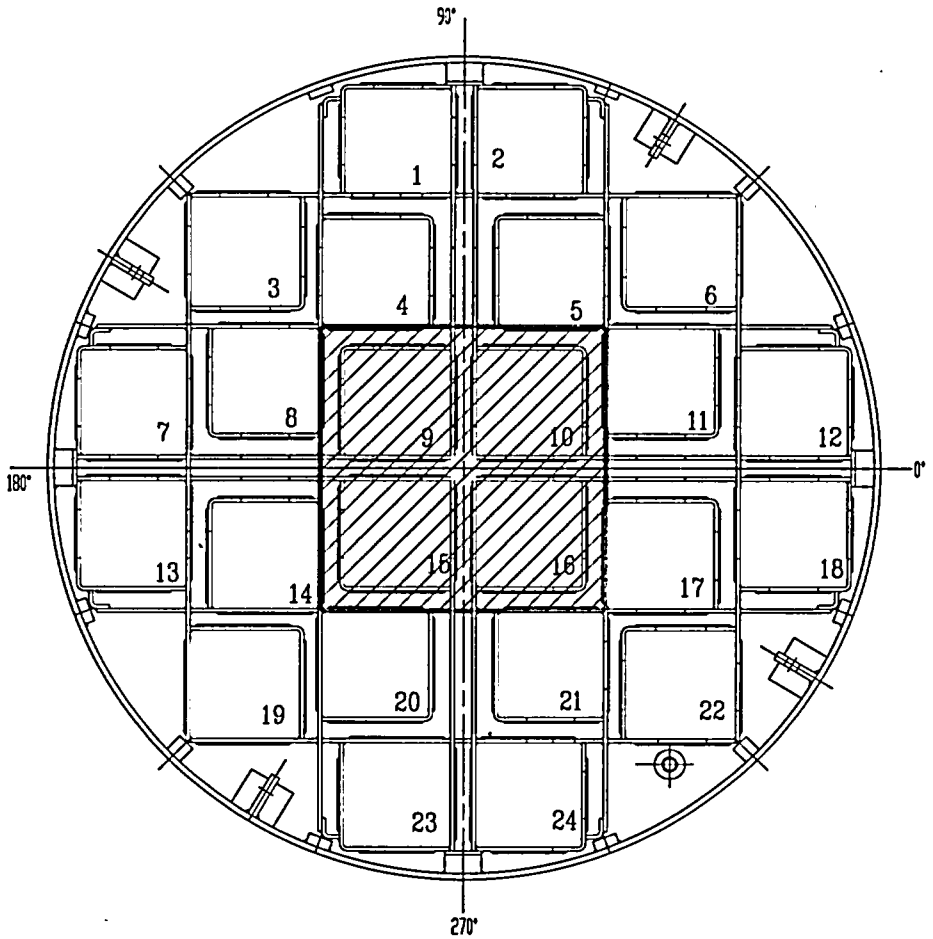

FIGURE 2.1-2

FUEL LOADING REGIONS - MPC-24E/24EF

LEGEND:

REGION 1:

REGION 2:

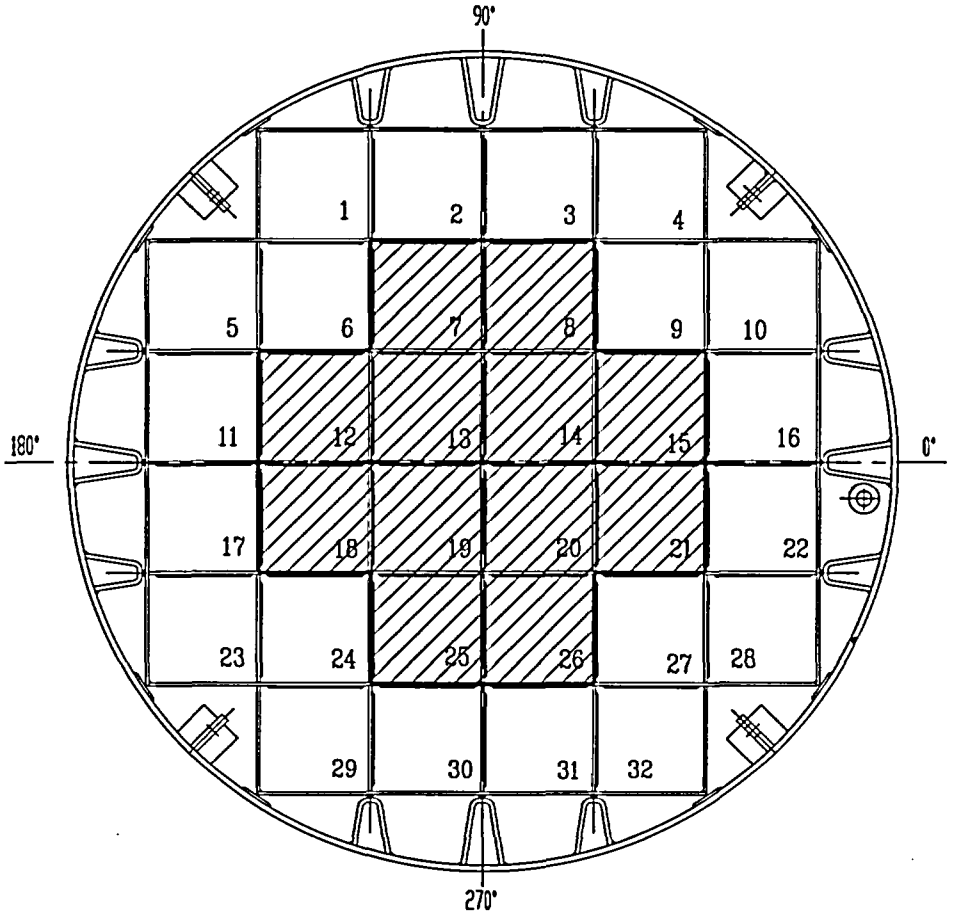

FIGURE 2.1-3

FUEL LOADING REGIONS - MPC-32/32F

LEGEND:

REGION 1:

REGION 2:

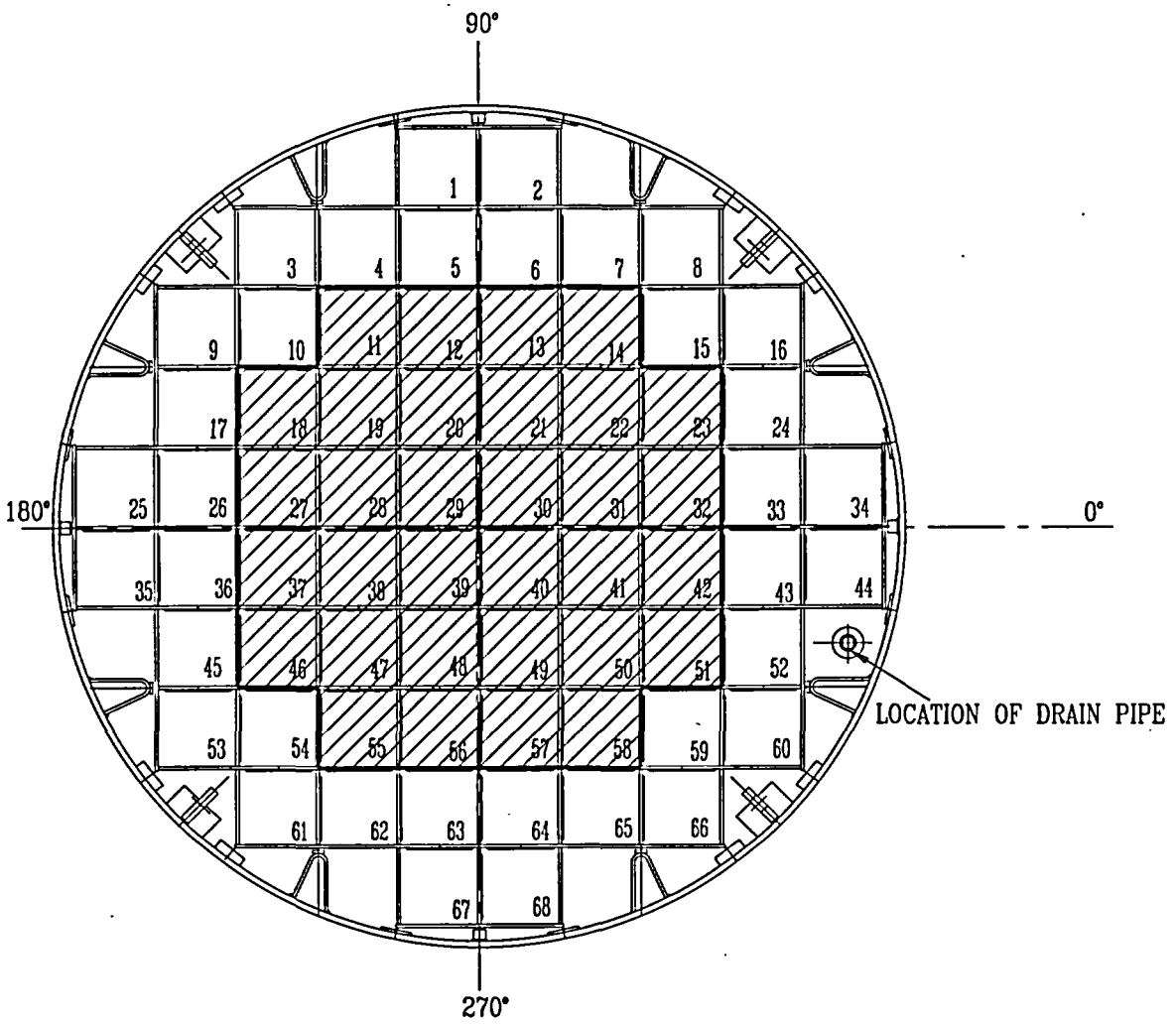

FIGURE 2.1-4

FUEL LOADING REGIONS - MPC-68/68FF

Table 2.1-1 (page 1 of 39)
Fuel Assembly Limits

I. MPC MODEL: MPC-24

A. Allowable Contents

1. Uranium oxide, PWR INTACT FUEL ASSEMBLIES listed in Table 2.1-2, with or without NON-FUEL HARDWARE and meeting the following specifications (Note 1):

a. Cladding Type:	ZR or Stainless Steel (SS) as specified in Table 2.1-2 for the applicable fuel assembly array/class.
b. Initial Enrichment:	As specified in Table 2.1-2 for the applicable fuel assembly array/class.
c. Post-irradiation Cooling Time and Average Burnup Per Assembly:	
i. Array/Classes 14x14D,14x14E, and 15x15G	Cooling time $\geq$ 8 years and an average burnup $\leq$ 40,000 MWD/MTU.
ii. All Other Array/Classes	Cooling time and average burnup as specified in Section 2.4.
iii. NON-FUEL HARDWARE	As specified in Table 2.1-8.

Table 2.1-1 (page 2 of 39)
Fuel Assembly Limits

I. MPC MODEL: MPC-24 (continued)

A. Allowable Contents (continued)

d. Decay Heat Per Fuel Storage Location:

i. Array/Classes 14x14D, 14x14E, and 15x15G — ≤ 710 Watts

ii All Other Array/Classes — As specified in Section 2.4.

e. Fuel Assembly Length: — ≤ 176.8 inches (nominal design)

f. Fuel Assembly Width: — ≤ 8.54 inches (nominal design)

g. Fuel Assembly Weight: — ≤ 1,680 lbs (including NON-FUEL HARDWARE)

B. Quantity per MPC: Up to 24 fuel assemblies.

C. Deleted.

D. Neutron sources and DAMAGED FUEL ASSEMBLIES and FUEL DEBRIS are not authorized for loading into the MPC-24.

Note 1: Fuel assemblies containing BPRAs, TPDs, WABAs, water displacement guide tube plugs, orifice rod assemblies, or vibration suppressor inserts may be stored in any fuel storage location. Fuel assemblies containing CRAs, RCCAs, CEAs, or APSRs may only be loaded in fuel storage locations 9, 10, 15, and/or 16. These requirements are in addition to any other requirements specified for uniform or regionalized fuel loading.

Table 2.1-1 (page 3 of 39)
Fuel Assembly Limits

II. MPC MODEL: MPC-68

A. Allowable Contents

1. Uranium oxide, BWR INTACT FUEL ASSEMBLIES listed in Table 2.1-3, with or without channels, and meeting the following specifications:

a. Cladding Type:	ZR or Stainless Steel (SS) as specified in Table 2.1-3 for the applicable fuel assembly array/class.
b. Maximum PLANAR-AVERAGE INITIAL ENRICHMENT:	As specified in Table 2.1-3 for the applicable fuel assembly array/class.
c. Initial Maximum Rod Enrichment:	As specified in Table 2.1-3 for the applicable fuel assembly array/class.
d. Post-irradiation Cooling Time and Average Burnup Per Assembly:	
i. Array/Classes 6x6A, 6x6C, 7x7A, and 8x8A:	Cooling time ≥ 18 years and an average burnup ≤ 30,000 MWD/MTU
ii. Array/Class 8x8F	Cooling time ≥ 10 years and an average burnup ≤ 27,500 MWD/MTU.
iii. Array/Classes 10x10D and 10x10E	Cooling time ≥ 10 years and an average burnup ≤ 22,500 MWD/MTU.
iv. All Other Array/Classes	As specified in Section 2.4.

Table 2.1-1 (page 4 of 39)
Fuel Assembly Limits

II. MPC MODEL: MPC-68 (continued)

A. Allowable Contents (continued)

e. Decay Heat Per Assembly:

i. Array/Classes 6x6A, 6x6C, 7x7A, and 8x8A	≤ 115 Watts
ii. Array/Class 8x8F	≤ 183.5 Watts.
iii. Array/Classes 10x10D and 10x10E	≤ 95 Watts
iv. All Other Array/Classes	As specified in Section 2.4.

f. Fuel Assembly Length:	≤ 176.5 inches (nominal design)
g. Fuel Assembly Width:	≤ 5.85 inches (nominal design)
h. Fuel Assembly Weight:	≤ 700 lbs, including channels

Table 2.1-1 (page 5 of 39)
Fuel Assembly Limits

II. MPC MODEL: MPC-68 (continued)

A. Allowable Contents (continued)

2. Uranium oxide, BWR DAMAGED FUEL ASSEMBLIES, with or without channels, placed in DAMAGED FUEL CONTAINERS. Uranium oxide BWR DAMAGED FUEL ASSEMBLIES shall meet the criteria specified in Table 2.1-3 and meet the following specifications:

a. Cladding Type:	ZR or Stainless Steel (SS) as specified in Table 2.1-3 for the applicable fuel assembly array/class.
b. Maximum PLANAR-AVERAGE INITIAL ENRICHMENT:	
i. Array/Classes 6x6A, 6x6C, 7x7A, and 8x8A	As specified in Table 2.1-3 for the applicable fuel assembly array/class.
ii. All Other Array/Classes specified in Table 2.1-3	4.0 wt% ^{235}U
c. Initial Maximum Rod Enrichment:	As specified in Table 2.1-3 for the applicable fuel assembly array/class.
d. Post-irradiation Cooling Time and Average Burnup Per Assembly:	
i. Array/Classes 6x6A, 6x6C, 7x7A,and 8x8A	Cooling time $\geq$ 18 years and an average burnup $\leq$ 30,000 MWD/MTU.
ii. Array/Class 8x8F	Cooling time $\geq$ 10 years and an average burnup $\leq$ 27,500 MWD/MTU.
iii. Array/Classes 10x10D and 10x10E	Cooling time $\geq$ 10 years and an average burnup $\leq$ 22,500 MWD/MTU.
iv. All Other Array Classes	As specified in Section 2.4.

Table 2.1-1 (page 6 of 39)
Fuel Assembly Limits

II. MPC MODEL: MPC-68 (continued)

A. Allowable Contents (continued)

e. Decay Heat Per Assembly:

i.	Array/Class 6x6A, 6x6C, 7x7A, and 8x8A	≤ 115 Watts
ii.	Array/Class 8x8F	≤ 183.5 Watts
iii.	Array/Classes 10x10D and 10x10E	≤ 95 Watts
iv.	All Other Array/Classes	As specified in Section 2.4.

f. Fuel Assembly Length:

i.	Array/Class 6x6A, 6x6C, 7x7A, or 8x8A	≤ 135.0 inches (nominal design)
ii.	All Other Array/Classes	≤ 176.5 inches (nominal design)

g. Fuel Assembly Width:

i.	Array/Class 6x6A, 6x6C, 7x7A, or 8x8A	≤ 4.70 inches (nominal design)
ii.	All Other Array/Classes	≤ 5.85 inches (nominal design)

h. Fuel Assembly Weight:

i.	Array/Class 6x6A, 6x6C, 7x7A, or 8x8A	≤ 550 lbs, including channels and DFC
ii.	All Other Array/Classes	≤ 700 lbs, including channels and DFC

Table 2.1-1 (page 7 of 39)
Fuel Assembly Limits

II. MPC MODEL: MPC-68 (continued)

A. Allowable Contents (continued)

3. Mixed oxide (MOX), BWR INTACT FUEL ASSEMBLIES, with or without channels. MOX BWR INTACT FUEL ASSEMBLIES shall meet the criteria specified in Table 2.1-3 for fuel assembly array/class 6x6B, and meet the following specifications:

a. Cladding Type:	ZR
b. Maximum PLANAR-AVERAGE INITIAL ENRICHMENT:	As specified in Table 2.1-3 for fuel assembly array/class 6x6B.
c. Initial Maximum Rod Enrichment:	As specified in Table 2.1-3 for fuel assembly array/class 6x6B.
d. Post-irradiation Cooling Time and Average Burnup Per Assembly:	Cooling time $\geq$ 18 years and an average burnup $\leq$ 30,000 MWD/MTIHM.
e. Decay Heat Per Assembly:	$\leq$ 115 Watts
f. Fuel Assembly Length:	$\leq$ 135.0 inches (nominal design)
g. Fuel Assembly Width:	$\leq$ 4.70 inches (nominal design)
h. Fuel Assembly Weight:	$\leq$ 400 lbs, including channels

Table 2.1-1 (page 8 of 39)
Fuel Assembly Limits

II. MPC MODEL: MPC-68 (continued)

A. Allowable Contents (continued)

4. Mixed oxide (MOX), BWR DAMAGED FUEL ASSEMBLIES, with or without channels, placed in DAMAGED FUEL CONTAINERS. MOX BWR DAMAGED FUEL ASSEMBLIES shall meet the criteria specified in Table 2.1-3 for fuel assembly array/class 6x6B, and meet the following specifications:

a. Cladding Type:	ZR
b. Maximum PLANAR-AVERAGE INITIAL ENRICHMENT:	As specified in Table 2.1-3 for array/class 6x6B.
c. Initial Maximum Rod Enrichment:	As specified in Table 2.1-3 for array/class 6x6B.
d. Post-irradiation Cooling Time and Average Burnup Per Assembly:	Cooling time ≥ 18 years and an average burnup ≤ 30,000 MWD/MTIHM.
e. Decay Heat Per Assembly:	≤ 115 Watts
f. Fuel Assembly Length:	≤ 135.0 inches (nominal design)
g. Fuel Assembly Width:	≤ 4.70 inches (nominal design)
h. Fuel Assembly Weight:	≤ 550 lbs, including channels and DFC

Table 2.1-1 (page 9 of 39)
Fuel Assembly Limits

II. MPC MODEL: MPC-68 (continued)

A. Allowable Contents (continued)

5. Thoria rods (ThO_2 and UO_2) placed in Dresden Unit 1 Thoria Rod Canisters and meeting the following specifications:

a. Cladding Type:	ZR
b. Composition:	98.2 wt.% ThO_2, 1.8 wt. % UO_2 with an enrichment of 93.5 wt. % ^{235}U.
c. Number of Rods Per Thoria Rod Canister:	$\leq$ 18
d. Decay Heat Per Thoria Rod Canister:	$\leq$ 115 Watts
e. Post-irradiation Fuel Cooling Time and Average Burnup Per Thoria Rod Canister:	A fuel post-irradiation cooling time $\geq$ 18 years and an average burnup $\leq$ 16,000 MWD/MTIHM.
f. Initial Heavy Metal Weight:	$\leq$ 27 kg/canister
g. Fuel Cladding O.D.:	$\geq$ 0.412 inches
h. Fuel Cladding I.D.:	$\leq$ 0.362 inches
i. Fuel Pellet O.D.:	$\leq$ 0.358 inches
j. Active Fuel Length:	$\leq$ 111 inches
k. Canister Weight:	$\leq$ 550 lbs, including fuel

Table 2.1-1 (page 10 of 39)
Fuel Assembly Limits

II. MPC MODEL: MPC-68 (continued)

B. Quantity per MPC:

1. Up to one (1) Dresden Unit 1 Thoria Rod Canister;

2. Up to 68 array/class 6x6A, 6x6B, 6x6C, 7x7A, or 8x8A DAMAGED FUEL ASSEMBLIES in DAMAGED FUEL CONTAINERS;

3. Up to sixteen (16) other BWR DAMAGED FUEL ASSEMBLIES in DAMAGED FUEL CONTAINERS in fuel storage locations 1, 2, 3, 8, 9, 16, 25, 34, 35, 44, 53, 60, 61, 66, 67, and/or 68; and/or

4. Any number of BWR INTACT FUEL ASSEMBLIES up to a total of 68.

C. Array/Class 10x10D and 10x10E fuel assemblies in stainless steel channels must be stored in fuel storage locations 19 - 22, 28 - 31, 38 -41, and/or 47 - 50.

D. Dresden Unit 1 fuel assemblies with one Antimony-Beryllium neutron source are authorized for loading in the MPC-68. The Antimony-Beryllium source material shall be in a water rod location.

E. FUEL DEBRIS is not authorized for loading in the MPC-68.

Table 2.1-1 (page 11 of 39)
Fuel Assembly Limits

III. MPC MODEL: MPC-68F

A. Allowable Contents

1. Uranium oxide, BWR INTACT FUEL ASSEMBLIES, with or without ZR channels. Uranium oxide BWR INTACT FUEL ASSEMBLIES shall meet the criteria specified in Table 2.1-3 for fuel assembly array class 6x6A, 6x6C, 7x7A or 8x8A, and meet the following specifications:

a. Cladding Type:	ZR
b Maximum PLANAR-AVERAGE INITIAL ENRICHMENT:	As specified in Table 2.1-3 for the applicable fuel assembly array/class.
c. Initial Maximum Rod Enrichment:	As specified in Table 2.1-3 for the applicable fuel assembly array/class.
d. Post-irradiation Cooling Time and Average Burnup Per Assembly:	Cooling time $\geq$ 18 years and an average burnup $\leq$ 30,000 MWD/MTU.
e. Decay Heat Per Assembly	$\leq$ 115 Watts
f. Fuel Assembly Length:	$\leq$ 135.0 inches (nominal design)
g. Fuel Assembly Width:	$\leq$ 4.70 inches (nominal design)
h. Fuel Assembly Weight:	$\leq$ 400 lbs, including channels

Table 2.1-1 (page 12 of 39)
Fuel Assembly Limits

III. MPC MODEL: MPC-68F (continued)

A. Allowable Contents (continued)

2. Uranium oxide, BWR DAMAGED FUEL ASSEMBLIES, with or without ZR channels, placed in DAMAGED FUEL CONTAINERS. Uranium oxide BWR DAMAGED FUEL ASSEMBLIES shall meet the criteria specified in Table 2.1-3 for fuel assembly array/class 6x6A, 6x6C, 7x7A, or 8x8A, and meet the following specifications:

a. Cladding Type:	ZR
b. Maximum PLANAR-AVERAGE INITIAL ENRICHMENT:	As specified in Table 2.1-3 for the applicable fuel assembly array/class.
c. Initial Maximum Rod Enrichment:	As specified in Table 2.1-3 for the applicable fuel assembly array/class.
d. Post-irradiation Cooling Time and Average Burnup Per Assembly:	Cooling time ≥ 18 years and an average burnup ≤ 30,000 MWD/MTU.
e. Decay Heat Per Assembly:	≤ 115 Watts
f. Fuel Assembly Length:	≤ 135.0 inches (nominal design)
g. Fuel Assembly Width:	≤ 4.70 inches (nominal design)
h. Fuel Assembly Weight:	≤ 550 lbs, including channels and DFC

Table 2.1-1 (page 13 of 39)
Fuel Assembly Limits

III. MPC MODEL: MPC-68F (continued)

A. Allowable Contents (continued)

3. Uranium oxide, BWR FUEL DEBRIS, with or without ZR channels, placed in DAMAGED FUEL CONTAINERS. The original fuel assemblies for the uranium oxide BWR FUEL DEBRIS shall meet the criteria specified in Table 2.1-3 for fuel assembly array/class 6x6A, 6x6C, 7x7A, or 8x8A, and meet the following specifications:

a. Cladding Type:	ZR
b. Maximum PLANAR-AVERAGE INITIAL ENRICHMENT:	As specified in Table 2.1-3 for the applicable original fuel assembly array/class.
c Initial Maximum Rod Enrichment:	As specified in Table 2.1-3 for the applicable original fuel assembly array/class.
d. Post-irradiation Cooling Time and Average Burnup Per Assembly	Cooling time $\geq$ 18 years and an average burnup $\leq$ 30,000 MWD/MTU for the original fuel assembly.
e. Decay Heat Per Assembly	$\leq$ 115 Watts
f. Original Fuel Assembly Length	$\leq$ 135.0 inches (nominal design)
g. Original Fuel Assembly Width	$\leq$ 4.70 inches (nominal design)
h. Fuel Debris Weight	$\leq$ 550 lbs, including channels and DFC

Table 2.1-1 (page 14 of 39)
Fuel Assembly Limits

III. MPC MODEL: MPC-68F (continued)

A. Allowable Contents (continued)

4. Mixed oxide (MOX), BWR INTACT FUEL ASSEMBLIES, with or without ZR channels. MOX BWR INTACT FUEL ASSEMBLIES shall meet the criteria specified in Table 2.1-3 for fuel assembly array/class 6x6B, and meet the following specifications:

a. Cladding Type:	ZR
b. Maximum PLANAR-AVERAGE INITIAL ENRICHMENT:	As specified in Table 2.1-3 for fuel assembly array/class 6x6B.
c. Initial Maximum Rod Enrichment:	As specified in Table 2.1-3 for fuel assembly array/class 6x6B.
d. Post-irradiation Cooling Time and Average Burnup Per Assembly:	Cooling time $\geq$ 18 years and an average burnup $\leq$ 30,000 MWD/MTIHM.
e. Decay Heat Per Assembly	$\leq$ 115 Watts
f. Fuel Assembly Length:	$\leq$ 135.0 inches (nominal design)
g. Fuel Assembly Width:	$\leq$ 4.70 inches (nominal design)
h. Fuel Assembly Weight:	$\leq$ 400 lbs, including channels

Table 2.1-1 (page 15 of 39)
Fuel Assembly Limits

III. MPC MODEL: MPC-68F (continued)

A. Allowable Contents (continued)

5. Mixed oxide (MOX), BWR DAMAGED FUEL ASSEMBLIES, with or without ZR channels, placed in DAMAGED FUEL CONTAINERS. MOX BWR DAMAGED FUEL ASSEMBLIES shall meet the criteria specified in Table 2.1-3 for fuel assembly array/class 6x6B, and meet the following specifications:

a. Cladding Type:	ZR
b. Maximum PLANAR-AVERAGE INITIAL ENRICHMENT:	As specified in Table 2.1-3 for fuel assembly array/class 6x6B.
c. Initial Maximum Rod Enrichment:	As specified in Table 2.1-3 for fuel assembly array/class 6x6B.
d. Post-irradiation Cooling Time and Average Burnup Per Assembly:	Cooling time $\geq$ 18 years and an average burnup $\leq$ 30,000 MWD/MTIHM.
e. Decay Heat Per Assembly	$\leq$ 115 Watts
f. Fuel Assembly Length:	$\leq$ 135.0 inches (nominal design)
g. Fuel Assembly Width:	$\leq$ 4.70 inches (nominal design)
h. Fuel Assembly Weight:	$\leq$ 550 lbs, including channels and DFC

Table 2.1-1 (page 16 of 39)
Fuel Assembly Limits

III. MPC MODEL: MPC-68F (continued)

A. Allowable Contents (continued)

6. Mixed Oxide (MOX), BWR FUEL DEBRIS, with or without ZR channels, placed in DAMAGED FUEL CONTAINERS. The original fuel assemblies for the MOX BWR FUEL DEBRIS shall meet the criteria specified in Table 2.1-3 for fuel assembly array/class 6x6B, and meet the following specifications:

a. Cladding Type:	ZR
b. Maximum PLANAR-AVERAGE INITIAL ENRICHMENT:	As specified in Table 2.1-3 for original fuel assembly array/class 6x6B.
c. Initial Maximum Rod Enrichment:	As specified in Table 2.1-3 for original fuel assembly array/class 6x6B.
d. Post-irradiation Cooling Time and Average Burnup Per Assembly:	Cooling time $\geq$ 18 years and an average burnup $\leq$ 30,000 MWD/MTIHM for the original fuel assembly.
e. Decay Heat Per Assembly	$\leq$ 115 Watts
f. Original Fuel Assembly Length:	$\leq$ 135.0 inches (nominal design)
g. Original Fuel Assembly Width:	$\leq$ 4.70 inches (nominal design)
h. Fuel Debris Weight:	$\leq$ 550 lbs, including channels and DFC

Table 2.1-1 (page 17 of 39)
Fuel Assembly Limits

III. MPC MODEL: MPC-68F (continued)

A. Allowable Contents (continued)

7. Thoria rods (ThO_2 and UO_2) placed in Dresden Unit 1 Thoria Rod Canisters and meeting the following specifications:

a. Cladding Type:	ZR
b. Composition:	98.2 wt.% ThO_2, 1.8 wt. % UO_2 with an enrichment of 93.5 wt. % ^{235}U.
c. Number of Rods Per Thoria Rod Canister:	$\leq$ 18
d. Decay Heat Per Thoria Rod Canister:	$\leq$ 115 Watts
e. Post-irradiation Fuel Cooling Time and Average Burnup Per Thoria Rod Canister:	A fuel post-irradiation cooling time $\geq$ 18 years and an average burnup $\leq$ 16,000 MWD/MTIHM.
f. Initial Heavy Metal Weight:	$\leq$ 27 kg/canister
g. Fuel Cladding O.D.:	$\geq$ 0.412 inches
h. Fuel Cladding I.D.:	$\leq$ 0.362 inches
i. Fuel Pellet O.D.:	$\leq$ 0.358 inches
j. Active Fuel Length:	$\leq$ 111 inches
k. Canister Weight:	$\leq$ 550 lbs, including fuel

Table 2.1-1 (page 18 of 39)
Fuel Assembly Limits

III. MPC MODEL: MPC-68F (continued)

B. Quantity per MPC (up to a total of 68 assemblies):
(All fuel assemblies must be array/class 6x6A, 6x6B, 6x6C, 7x7A, or 8x8A):

Up to four (4) DFCs containing uranium oxide BWR FUEL DEBRIS or MOX BWR FUEL DEBRIS. The remaining MPC-68F fuel storage locations may be filled with fuel assemblies of the following type, as applicable:

1. Uranium oxide BWR INTACT FUEL ASSEMBLIES;

2. MOX BWR INTACT FUEL ASSEMBLIES;

3. Uranium oxide BWR DAMAGED FUEL ASSEMBLIES placed in DFCs;

4. MOX BWR DAMAGED FUEL ASSEMBLIES placed in DFCs; or

5. Up to one (1) Dresden Unit 1 Thoria Rod Canister.

C. Fuel assemblies with stainless steel channels are not authorized for loading in the MPC-68F.

D. Dresden Unit 1 fuel assemblies with one Antimony-Beryllium neutron source are authorized for loading in the MPC-68F. The Antimony-Beryllium source material shall be in a water rod location.

Table 2.1-1 (page 19 of 39)
Fuel Assembly Limits

IV. MPC MODEL: MPC-24E

A. Allowable Contents

1. Uranium oxide, PWR INTACT FUEL ASSEMBLIES listed in Table 2.1-2, with or without NON-FUEL HARDWARE and meeting the following specifications (Note 1):

a. Cladding Type:	ZR or Stainless Steel (SS) as specified in Table 2.1-2 for the applicable fuel assembly array/class
b. Initial Enrichment:	As specified in Table 2.1-2 for the applicable fuel assembly array/class.
c. Post-irradiation Cooling Time and Average Burnup Per Assembly:	
i. Array/Classes 14x14D, 14x14E, and 15x15G	Cooling time $\geq$ 8 years and an average burnup $\leq$ 40,000 MWD/MTU.
ii. All Other Array/Classes	As specified in Section 2.4.
iii. NON-FUEL HARDWARE	As specified in Table 2.1-8.

Table 2.1-1 (page 20 of 39)
Fuel Assembly Limits

IV. MPC MODEL: MPC-24E (continued)

A. Allowable Contents (continued)

d. Decay Heat Per Fuel Storage Location:	
i. Array/Classes 14x14D, 14x14E, and 15x15G	≤ 710 Watts.
ii. All other Array/Classes	As specified in Section 2.4.
e. Fuel Assembly Length:	≤ 176.8 inches (nominal design)
f. Fuel Assembly Width:	≤ 8.54 inches (nominal design)
g. Fuel Assembly Weight:	≤ 1,680 lbs (including NON-FUEL HARDWARE)

Table 2.1-1 (page 21 of 39)
Fuel Assembly Limits

IV. MPC MODEL: MPC-24E (continued)

A. Allowable Contents (continued)

2. Uranium oxide, PWR DAMAGED FUEL ASSEMBLIES, with or without NON-FUEL HARDWARE, placed in DAMAGED FUEL CONTAINERS. Uranium oxide PWR DAMAGED FUEL ASSEMBLIES shall meet the criteria specified in Table 2.1-2 and meet the following specifications (Note 1):

a. Cladding Type:	ZR or Stainless Steel (SS) as specified in Table 2.1-2 for the applicable fuel assembly array/class
b. Initial Enrichment:	As specified in Table 2.1-2 for the applicable fuel assembly array/class.
c. Post-irradiation Cooling Time and Average Burnup Per Assembly:	
i. Array/Classes 14x14D, 14x14E, and 15x15G	Cooling time $\geq$ 8 years and an average burnup $\leq$ 40,000 MWD/MTU.
ii. All Other Array/Classes	As specified in Section 2.4.
iii. NON-FUEL HARDWARE	As specified in Table 2.1-8.

Table 2.1-1 (page 22 of 39)
Fuel Assembly Limits

IV. MPC MODEL: MPC-24E (continued)

A. Allowable Contents (continued)

d. Decay Heat Per Fuel Storage Location:	
i. Array/Classes 14x14D, 14x14E, and 15x15G	≤ 710 Watts.
ii. All Other Array/Classes	As specified in Section 2.4.
e. Fuel Assembly Length	≤ 176.8 inches (nominal design)
f. Fuel Assembly Width	≤ 8.54 inches (nominal design)
g. Fuel Assembly Weight	≤ 1,680 lbs (including NON-FUEL HARDWARE and DFC)

B. Quantity per MPC: Up to four (4) DAMAGED FUEL ASSEMBLIES in DAMAGED FUEL CONTAINERS, stored in fuel storage locations 3, 6, 19 and/or 22. The remaining MPC-24E fuel storage locations may be filled with PWR INTACT FUEL ASSEMBLIES meeting the applicable specifications.

C. Neutron sources and FUEL DEBRIS are not authorized for loading in the MPC-24E.

Note 1: Fuel assemblies containing BPRAs, TPDs, WABAs, water displacement guide tube plugs, orifice rod assemblies, or vibration supressor inserts may be stored in any fuel storage location. Fuel assemblies containing CRAs, RCCAs, CEAs, or APSRs may only be loaded in fuel storage locations 9, 10, 15, and/or 16. These requirements are in addition to any other requirements specified for uniform or regionalized fuel loading.

Table 2.1-1 (page 23 of 39)
Fuel Assembly Limits

V. MPC MODEL: MPC-32

A. Allowable Contents

1. Uranium oxide, PWR INTACT FUEL ASSEMBLIES listed in Table 2.1-2, with or without NON-FUEL HARDWARE and meeting the following specifications (Note 1):

a. Cladding Type:	ZR or Stainless Steel (SS) as specified in Table 2.1-2 for the applicable fuel assembly array/class
b. Initial Enrichment:	As specified in Table 2.1-2 for the applicable fuel assembly array/class.
c. Post-irradiation Cooling Time and Average Burnup Per Assembly	
i. Array/Classes 14x14D, 14x14E, and 15x15G	Cooling time ≥ 9 years and an average burnup ≤ 30,000 MWD/MTU or cooling time ≥ 20 years and an average burnup ≤ 40,000 MWD/MTU.
ii. All Other Array/Classes	As specified in Section 2.4.
iii. NON-FUEL HARDWARE	As specified in Table 2.1-8.

Table 2.1-1 (page 24 of 39)
Fuel Assembly Limits

V. MPC MODEL: MPC-32 (continued)

A. Allowable Contents (continued)

d. Decay Heat Per Fuel Storage Location:	
i. Array/Classes 14x14D, 14x14E, and 15x15G	≤ 500 Watts
ii. All Other Array/Classes	As specified in Section 2.4.
e. Fuel Assembly Length	≤ 176.8 inches (nominal design)
f. Fuel Assembly Width	≤ 8.54 inches (nominal design)
g. Fuel Assembly Weight	≤ 1,680 lbs (including NON-FUEL HARDWARE)

Table 2.1-1 (page 25 of 39)
Fuel Assembly Limits

V. MPC MODEL: MPC-32 (continued)

A. Allowable Contents (continued)

2. Uranium oxide, PWR DAMAGED FUEL ASSEMBLIES, with or without NON-FUEL HARDWARE, placed in DAMAGED FUEL CONTAINERS. Uranium oxide PWR DAMAGED FUEL ASSEMBLIES shall meet the criteria specified in Table 2.1-2 and meet the following specifications (Note 1):

a. Cladding Type:	ZR or Stainless Steel (SS) as specified in Table 2.1-2 for the applicable fuel assembly array/class
b. Initial Enrichment:	As specified in Table 2.1-2 for the applicable fuel assembly array/class.
c. Post-irradiation Cooling Time and Average Burnup Per Assembly:	
i. Array/Classes 14x14D, 14x14E, and 15x15G	Cooling time $\geq$ 9 years and an average burnup $\leq$ 30,000 MWD/MTU or cooling time $\geq$ 20 years and an average burnup $\leq$ 40,000 MWD/MTU.
ii. All Other Array/Classes	As specified in Section 2.4.
iii. NON-FUEL HARDWARE	As specified in Table 2.1-8.

Table 2.1-1 (page 26 of 39)
Fuel Assembly Limits

V. MPC MODEL: MPC-32 (continued)

A. Allowable Contents (continued)

d. Decay Heat Per Fuel Storage Location:	
i. Array/Classes 14x14D, 14x14E, and 15x15G	≤ 500 Watts.
ii. All Other Array/Classes	As specified in Section 2.4.
e. Fuel Assembly Length	≤ 176.8 inches (nominal design)
f. Fuel Assembly Width	≤ 8.54 inches (nominal design)
g. Fuel Assembly Weight	≤ 1,680 lbs (including NON-FUEL HARDWARE and DFC)

B. Quantity per MPC: Up to eight (8) DAMAGED FUEL ASSEMBLIES in DAMAGED FUEL CONTAINERS, stored in fuel storage locations 1, 4, 5, 10, 23, 28, 29, and/or 32. The remaining MPC-32 fuel storage locations may be filled with PWR INTACT FUEL ASSEMBLIES meeting the applicable specifications.

C. Neutron sources and FUEL DEBRIS are not authorized for loading in the MPC-32.

Note 1: Fuel assemblies containing BPRAs, TPDs, WABAs, water displacement guide tube plugs, orifice rod assemblies, or vibration suppressor inserts may be stored in any fuel storage location. Fuel assemblies containing CRAs, RCCAs, CEAs, or APSRs may only be loaded in fuel storage locations 13, 14, 19, and/or 20. These requirements are in addition to any other requirements specified for uniform or regionalized fuel loading.

Table 2.1-1 (page 27 of 39)
Fuel Assembly Limits

VI. MPC MODEL: MPC-68FF

A. Allowable Contents

1. Uranium oxide or MOX BWR INTACT FUEL ASSEMBLIES listed in Table 2.1-3, with or without channels and meeting the following specifications:

a. Cladding Type:	ZR or Stainless Steel (SS) as specified in Table 2.1-3 for the applicable fuel assembly array/class
b. Maximum PLANAR-AVERAGE INITIAL ENRICHMENT:	As specified in Table 2.1-3 for the applicable fuel assembly array/class.
c. Initial Maximum Rod Enrichment	As specified in Table 2.1-3 for the applicable fuel assembly array/class.
d. Post-irradiation Cooling Time and Average Burnup Per Assembly	
i. Array/Classes 6x6A, 6x6B, 6x6C, 7x7A, and 8x8A	Cooling time ≥ 18 years and an average burnup ≤ 30,000 MWD/MTU (or MTU/MTIHM).
ii. Array/Class 8x8F	Cooling time ≥ 10 years and an average burnup ≤ 27,500 MWD/MTU.
iii. Array/Classes 10x10D and 10x10E	Cooling time ≥ 10 years and an average burnup ≤ 22,500 MWD/MTU.
iv. All Other Array/Classes	As specified in Section 2.4.

Table 2.1-1 (page 28 of 39)
Fuel Assembly Limits

VI. MPC MODEL: MPC-68FF (continued)

A. Allowable Contents (continued)

e. Decay Heat Per Assembly

i. Array/Classes 6x6A, 6X6b, 6x6C, 7x7A, and 8x8A	≤ 115 Watts
ii. Array/Class 8x8F	≤ 183.5 Watts
iii. Array/Classes 10x10D and 10x10E	≤ 95 Watts
iv. All Other Array/Classes	As specified in Section 2.4.

f. Fuel Assembly Length

i. Array/Class 6x6A, 6x6B, 6x6C, 7x7A, or 8x8A	≤ 135.0 inches (nominal design)
ii. All Other Array/Classes	≤ 176.5 inches (nominal design)

g. Fuel Assembly Width

i. Array/Class 6x6A, 6x6B, 6x6C, 7x7A, or 8x8A	≤ 4.70 inches (nominal design)
ii. All Other Array/Classes	≤ 5.85 inches (nominal design)

h. Fuel Assembly Weight

i. Array/Class 6x6A, 6x6B, 6x6C, 7x7A, or 8x8A	≤ 550 lbs, including channels
ii. All Other Array/Classes	≤ 700 lbs, including channels

Table 2.1-1 (page 29 of 39)
Fuel Assembly Limits

VI. MPC MODEL: MPC-68FF (continued)

A. Allowable Contents (continued)

2. Uranium oxide or MOX BWR DAMAGED FUEL ASSEMBLIES or FUEL DEBRIS, with or without channels, placed in DAMAGED FUEL CONTAINERS. Uranium oxide and MOX BWR DAMAGED FUEL ASSEMBLIES and FUEL DEBRIS shall meet the criteria specified in Table 2.1-3, and meet the following specifications:

a. Cladding Type:	ZR or Stainless Steel (SS) in accordance with Table 2.1-3 for the applicable fuel assembly array/class.
b. Maximum PLANAR-AVERAGE INITIAL ENRICHMENT:	
i. Array/Classes 6x6A, 6x6B, 6x6C, 7x7A, and 8x8A.	As specified in Table 2.1-3 for the applicable fuel assembly array/class.
ii. All Other Array Classes	$\leq$ 4.0 wt.% ^{235}U.
c. Initial Maximum Rod Enrichment	As specified in Table 2.1-3 for the applicable fuel assembly array/class.
d. Post-irradiation Cooling Time and Average Burnup Per Assembly:	
i. Array/Class 6x6A, 6x6B, 6x6C, 7x7A, or 8x8A	Cooling time $\geq$ 18 years and an average burnup $\leq$ 30,000 MWD/MTU (or MWD/MTIHM).
ii. Array/Class 8x8F	Cooling time $\geq$ 10 years and an average burnup $\leq$ 27,500 MWD/MTU.
iii. Array/Class 10x10D and 10x10E	Cooling time $\geq$ 10 years and an average burnup $\leq$ 22,500 MWD/MTU.
iv. All Other Array/Classes	As specified in Section 2.4.

Table 2.1-1 (page 30 of 39)
Fuel Assembly Limits

VI. MPC MODEL: MPC-68FF (continued)

A. Allowable Contents (continued)

e. Decay Heat Per Assembly

i.	Array/Class 6x6A, 6x6B, 6x6C, 7x7A, or 8x8A	≤ 115 Watts
ii.	Array/Class 8x8F	≤ 183.5 Watts
iii.	Array/Classes 10x10D and 10x10E	≤ 95 Watts
iv.	All Other Array/Classes	As specified in Section 2.4.

f. Fuel Assembly Length

i.	Array/Class 6x6A, 6x6B, 6x6C, 7x7A, or 8x8A	≤ 135.0 inches (nominal design)
ii.	All Other Array/Classes	≤ 176.5 inches (nominal design)

g. Fuel Assembly Width

i.	Array/Class 6x6A, 6x6B, 6x6C, 7x7A, or 8x8A	≤ 4.70 inches (nominal design)
ii.	All Other Array/Classes	≤ 5.85 inches (nominal design)

h. Fuel Assembly Weight

i.	Array/Class 6x6A, 6x6B, 6x6C, 7x7A, or 8x8A	≤ 550 lbs, including channels and DFC
ii.	All Other Array/Classes	≤ 700 lbs, including channels and DFC

Table 2.1-1 (page 31 of 39)
Fuel Assembly limits

VI. MPC MODEL: MPC-68FF (continued)

B. Quantity per MPC (up to a total of 68 assemblies)

1. For fuel assembly array/classes 6x6A, 6X6B, 6x6C, 7x7A, or 8x8A, up to 68 BWR INTACT FUEL ASSEMBLIES and/or DAMAGED FUEL ASSEMBLIES. Up to eight (8) DFCs containing FUEL DEBRIS from these array/classes may be stored.

2. For all other array/classes, up to sixteen (16) DFCs containing BWR DAMAGED FUEL ASSEMBLIES and/or up to eight (8) DFCs containing FUEL DEBRIS. DFCs shall be located only in fuel storage locations 1, 2, 3, 8, 9, 16, 25, 34, 35, 44, 53, 60, 61, 66, 67, and/or 68. The remaining MPC-68FF fuel storage locations may be filled with fuel assemblies of the following type:

   i. Uranium Oxide BWR INTACT FUEL ASSEMBLIES; or

   ii. MOX BWR INTACT FUEL ASSEMBLIES.

C. Dresden Unit 1 fuel assemblies with one Antimony-Beryllium neutron source are authorized for loading in the MPC-68FF. The Antimony-Beryllium source material shall be in a water rod location.

D. Array/Class 10x10D and 10x10E fuel assemblies in stainless steel channels must be stored in fuel storage locations 19 - 22, 28 - 31, 38 -41, and/or 47 - 50.

Table 2.1-1 (page 32 of 39)
Fuel Assembly Limits

VII. MPC MODEL: MPC-24EF

A. Allowable Contents

1. Uranium oxide, PWR INTACT FUEL ASSEMBLIES listed in Table 2.1-2, with or without NON-FUEL HARDWARE and meeting the following specifications (Note 1):

a. Cladding Type:	ZR or Stainless Steel (SS) as specified in Table 2.1-2 for the applicable fuel assembly array/class
b. Initial Enrichment:	As specified in Table 2.1-2 for the applicable fuel assembly array/class.
c. Post-irradiation Cooling Time and Average Burnup Per Assembly:	
i. Array/Classes 14x14D, 14x14E, and 15x15G	Cooling time $\geq$ 8 years and an average burnup $\leq$ 40,000 MWD/MTU.
ii. All Other Array/Classes	As specified in Section 2.4.
iii. NON-FUEL HARDWARE	As specified in Table 2.1-8.

Table 2.1-1 (page 33 of 39)
Fuel Assembly Limits

VII. MPC MODEL: MPC-24EF (continued)

A. Allowable Contents (continued)

d. Decay Heat Per Fuel Storage Location:	
i. Array/Classes 14x14D, 14x14E, and 15x15G	≤ 710 Watts.
ii. All other Array/Classes	As specified in Section 2.4.
e. Fuel Assembly Length:	≤ 176.8 inches (nominal design)
f. Fuel Assembly Width:	≤ 8.54 inches (nominal design)
g. Fuel Assembly Weight:	≤ 1,680 lbs (including NON-FUEL HARDWARE)

Table 2.1-1 (page 34 of 39)
Fuel Assembly Limits

VII. MPC MODEL: MPC-24EF (continued)

A. Allowable Contents (continued)

2. Uranium oxide, PWR DAMAGED FUEL ASSEMBLIES and FUEL DEBRIS, with or without NON-FUEL HARDWARE, placed in DAMAGED FUEL CONTAINERS. Uranium oxide PWR DAMAGED FUEL ASSEMBLIES and FUEL DEBRIS shall meet the criteria specified in Table 2.1-2 and meet the following specifications (Note 1):

a. Cladding Type:	ZR or Stainless Steel (SS) as specified in Table 2.1-2 for the applicable fuel assembly array/class
b. Initial Enrichment:	As specified in Table 2.1-2 for the applicable fuel assembly array/class.
c. Post-irradiation Cooling Time and Average Burnup Per Assembly:	
i. Array/Classes 14x14D, 14x14E, and 15x15G	Cooling time $\geq$ 8 years and an average burnup $\leq$ 40,000 MWD/MTU.
ii. All Other Array/Classes	As specified in Section 2.4.
iii. NON-FUEL HARDWARE	As specified in Table 2.1-8.

Table 2.1-1 (page 35 of 39)
Fuel Assembly Limits

VII. MPC MODEL: MPC-24EF (continued)

A. Allowable Contents (continued)

d. Decay Heat Per Fuel Storage Location:	
i. Array/Classes 14x14D, 14x14E, and 15x15G	≤ 710 Watts.
ii. All Other Array/Classes	As specified in Section 2.4.
e. Fuel Assembly Length	≤ 176.8 inches (nominal design)
f. Fuel Assembly Width	≤ 8.54 inches (nominal design)
g. Fuel Assembly Weight	≤ 1,680 lbs (including NON-FUEL HARDWARE and DFC)

B. Quantity per MPC: Up to four (4) DAMAGED FUEL ASSEMBLIES and/or FUEL DEBRIS in DAMAGED FUEL CONTAINERS, stored in fuel storage locations 3, 6, 19 and/or 22. The remaining MPC-24EF fuel storage locations may be filled with PWR INTACT FUEL ASSEMBLIES meeting the applicable specifications.

C. Neutron sources are not permitted for loading in the MPC-24EF.

Note 1: Fuel assemblies containing BPRAs, TPDs, WABAs, water displacement guide tube plugs, orifice rod assemblies, or vibration suppressor inserts may be stored in any fuel storage location. Fuel assemblies containing CRAs, RCCAs, CEAs, or APSRs may only be loaded in fuel storage locations 9, 10, 15, and/or 16. These requirements are in addition to any other requirements specified for uniform or regionalized fuel loading.

Table 2.1-1 (page 36 of 39)
Fuel Assembly Limits

VIII. MPC MODEL: MPC-32F

A. Allowable Contents

1. Uranium oxide, PWR INTACT FUEL ASSEMBLIES listed in Table 2.1-2, with or without NON-FUEL HARDWARE and meeting the following specifications (Note 1):

a. Cladding Type:	ZR or Stainless Steel (SS) as specified in Table 2.1-2 for the applicable fuel assembly array/class
b. Initial Enrichment:	As specified in Table 2.1-2 for the applicable fuel assembly array/class.
c. Post-irradiation Cooling Time and Average Burnup Per Assembly:	
i. Array/Classes 14x14D, 14x14E, and 15x15G	Cooling time ≥ 9 years and an average burnup ≤ 30,000 MWD/MTU or cooling time ≥ 20 years and an average burnup ≤ 40,000 MWD/MTU.
ii. All Other Array/Classes	As specified in Section 2.4.
iii. NON-FUEL HARDWARE	As specified in Table 2.1-8.

Table 2.1-1 (page 37 of 39)
Fuel Assembly Limits

VIII. MPC MODEL: MPC-32F (cont'd)

A. Allowable Contents (cont'd)

d. Decay Heat Per Fuel Storage Location:	
i. Array/Classes 14x14D, 14x14E, and 15x15G	≤ 500 Watts.
ii. All Other Array/Classes	As specified in Section 2.4.
e. Fuel Assembly Length	≤ 176.8 inches (nominal design)
f. Fuel Assembly Width	≤ 8.54 inches (nominal design)
g. Fuel Assembly Weight	≤ 1,680 lbs (including NON-FUEL HARDWARE)

Table 2.1-1 (page 38 of 39)
Fuel Assembly Limits

VIII. MPC MODEL: MPC-32F (cont'd)

A. Allowable Contents (cont'd)

2. Uranium oxide, PWR DAMAGED FUEL ASSEMBLIES and FUEL DEBRIS, with or without NON-FUEL HARDWARE, placed in DAMAGED FUEL CONTAINERS. Uranium oxide PWR DAMAGED FUEL ASSEMBLIES and FUEL DEBRIS shall meet the criteria specified in Table 2.1-2 and meet the following specifications (Note 1):

a. Cladding Type:	ZR or Stainless Steel (SS) as specified in Table 2.1-2 for the applicable fuel assembly array/class
b. Initial Enrichment:	As specified in Table 2.1-2 for the applicable fuel assembly array/class.
c. Post-irradiation Cooling Time and Average Burnup Per Assembly:	
i. Array/Classes 14x14D, 14x14E, and 15x15G	Cooling time ≥ 9 years and an average burnup ≤ 30,000 MWD/MTU or cooling time ≥ 20 years and an average burnup ≤ 40,000 MWD/MTU.
ii. All Other Array/Classes	As specified in Section 2.4.
iii. NON-FUEL HARDWARE	As specified in Table 2.1-8.

Table 2.1-1 (page 39 of 39)
Fuel Assembly Limits

VIII. MPC MODEL: MPC-32F (cont'd)

A. Allowable Contents (cont'd)

d. Decay Heat Per Fuel Storage Location:

i. Array/Classes 14x14D, 14x14E, and 15x15G	≤ 500 Watts.
ii. All Other Array/Classes	As specified in Section 2.3.
e. Fuel Assembly Length	≤ 176.8 inches (nominal design)
f. Fuel Assembly Width	≤ 8.54 inches (nominal design)
g. Fuel Assembly Weight	≤ 1,680 lbs (including NON-FUEL HARDWARE and DFC)

B. Quantity per MPC: Up to eight (8) DAMAGED FUEL ASSEMBLIES and/or FUEL DEBRIS in DAMAGED FUEL CONTAINERS, stored in fuel storage locations 1, 4, 5, 10, 23, 28, 29, and/or 32. The remaining MPC-32F fuel storage locations may be filled with PWR INTACT FUEL ASSEMBLIES meeting the applicable specifications.

C. Neutron sources are not permitted for loading in the MPC-32F.

Note 1: Fuel assemblies containing BPRAs, TPDs, WABAs, water displacement guide tube plugs, orifice rod assemblies, or vibration suppressor inserts may be stored in any fuel storage location. Fuel assemblies containing CRAs, RCCAs, CEAs, or APSRs may only be loaded in fuel storage locations 13, 14, 19 and/or 20. These requirements are in addition to any other requirements specified for uniform or regionalized fuel loading.

Table 2.1-2 (page 1 of 4)
PWR FUEL ASSEMBLY CHARACTERISTICS (Note 1)

Fuel Assembly Array/Class	**14x14A**	**14x14B**	**14x14C**	**14x14D**	**14x14E**
Clad Material	ZR	ZR	ZR	SS	SS
Design Initial U (kg/assy.) (Note 3)	≤ 365	≤ 412	≤ 438	≤ 400	≤ 206
Initial Enrichment (MPC-24, 24E and 24EF without soluble boron credit) (wt % ^{235}U) (Note 7)	≤ 4.6 (24) ≤ 5.0 (24E/24EF)	≤ 4.6 (24) ≤ 5.0 (24E/24EF)	≤ 4.6 (24) ≤ 5.0 (24E/24EF)	≤ 4.0 (24) ≤ 5.0 (24E/24EF)	≤ 5.0 (24) ≤ 5.0 (24E/24EF)
Initial Enrichment (MPC-24, 24E, 24EF, 32, or 32F with soluble boron credit - see Note 5) (wt % ^{235}U)	≤ 5.0	≤ 5.0	≤ 5.0	≤ 5.0	≤ 5.0
No. of Fuel Rod Locations	179	179	176	180	173
Fuel Rod Clad O.D. (in.)	≥ 0.400	≥ 0.417	≥ 0.440	≥ 0.422	≥ 0.3415
Fuel Rod Clad I.D. (in.)	≤ 0.3514	≤ 0.3734	≤ 0.3880	≤ 0.3890	≤ 0.3175
Fuel Pellet Dia. (in.)	≤ 0.3444	≤ 0.3659	≤ 0.3805	≤ 0.3835	≤ 0.3130
Fuel Rod Pitch (in.)	≤ 0.556	≤ 0.556	≤ 0.580	≤ 0.556	Note 6
Active Fuel Length (in.)	≤ 150	≤ 150	≤ 150	≤ 144	≤ 102
No. of Guide and/or Instrument Tubes	17	17	5 (Note 4)	16	0
Guide/Instrument Tube Thickness (in.)	≥ 0.017	≥ 0.017	≥ 0.038	≥ 0.0145	N/A

Table 2.1-2 (page 2 of 4)
PWR FUEL ASSEMBLY CHARACTERISTICS (Note 1)

Fuel Assembly Array/Class	**15x15A**	**15x15B**	**15x15C**	**15x15D**	**15x15E**	**15x15F**
Clad Material	ZR	ZR	ZR	ZR	ZR	ZR
Design Initial U (kg/assy.) (Note 3)	≤ 473	≤ 473	≤ 473	≤ 495	≤ 495	≤ 495
Initial Enrichment (MPC-24, 24E and 24EF without soluble boron credit) (wt % ^{235}U) (Note 7)	≤ 4.1 (24) ≤ 4.5 (24E/24EF)	≤ 4.1 (24) ≤ 4.5 (24E/24EF)	≤ 4.1 (24) ≤ 4.5 (24E/24EF)	≤ 4.1 (24) ≤ 4.5 (24E/24EF)	≤ 4.1 (24) ≤ 4.5 (24E/24EF)	≤ 4.1 (24) ≤ 4.5 (24E/24EF)
Initial Enrichment (MPC-24, 24E, 24EF, 32, or 32F with soluble boron credit - see Note 5) (wt % ^{235}U)	≤ 5.0	≤ 5.0	≤ 5.0	≤ 5.0	≤ 5.0	≤ 5.0
No. of Fuel Rod Locations	204	204	204	208	208	208
Fuel Rod Clad O.D. (in.)	≥ 0.418	≥ 0.420	≥ 0.417	≥ 0.430	≥ 0.428	≥ 0.428
Fuel Rod Clad I.D. (in.)	≤ 0.3660	≤ 0.3736	≤ 0.3640	≤ 0.3800	≤ 0.3790	≤ 0.3820
Fuel Pellet Dia. (in.)	≤ 0.3580	≤ 0.3671	≤ 0.3570	≤ 0.3735	≤ 0.3707	≤ 0.3742
Fuel Rod Pitch (in.)	≤ 0.550	≤ 0.563	≤ 0.563	≤ 0.568	≤ 0.568	≤ 0.568
Active Fuel Length (in.)	≤ 150	≤ 150	≤ 150	≤ 150	≤ 150	≤ 150
No. of Guide and/or Instrument Tubes	21	21	21	17	17	17
Guide/Instrument Tube Thickness (in.)	≥ 0.0165	≥ 0.015	≥ 0.0165	≥ 0.0150	≥ 0.0140	≥ 0.0140

Table 2.1-2 (page 3 of 4)
PWR FUEL ASSEMBLY CHARACTERISTICS (Note 1)

Fuel Assembly Array/ Class	**15x15G**	**15x15H**	**16x16A**	**17x17A**	**17x17B**	**17x17C**
Clad Material	SS	ZR	ZR	ZR	ZR	ZR
Design Initial U (kg/assy.) (Note 3)	≤ 420	≤ 495	≤ 448	≤ 433	≤ 474	≤ 480
Initial Enrichment (MPC-24, 24E, and 24EF without soluble boron credit) (wt % ^{235}U) (Note 7)	≤ 4.0 (24) ≤ 4.5 (24E/24EF)	≤ 3.8 (24) ≤ 4.2 (24E/24EF)	≤ 4.6 (24) ≤ 5.0 (24E/24EF)	≤ 4.0 (24) ≤ 4.4 (24E/24EF)	≤ 4.0 (24) ≤ 4.4 (24E/24EF)	≤ 4.0 (24) ≤ 4.4 (24E/24EF)
Initial Enrichment (MPC-24, 24E, 24EF, 32, or 32F with soluble boron credit - see Note 5) (wt % ^{235}U)	≤ 5.0	≤ 5.0	≤ 5.0	≤ 5.0	≤ 5.0	≤ 5.0
No. of Fuel Rod Locations	204	208	236	264	264	264
Fuel Rod Clad O.D. (in.)	≥ 0.422	≥ 0.414	≥ 0.382	≥ 0.360	≥ 0.372	≥ 0.377
Fuel Rod Clad I.D. (in.)	≤ 0.3890	≤ 0.3700	≤ 0.3320	≤ 0.3150	≤ 0.3310	≤ 0.3330
Fuel Pellet Dia. (in.)	≤ 0.3825	≤ 0.3622	≤ 0.3255	≤ 0.3088	≤ 0.3232	≤ 0.3252
Fuel Rod Pitch (in.)	≤ 0.563	≤ 0.568	≤ 0.506	≤ 0.496	≤ 0.496	≤ 0.502
Active Fuel Length (in.)	≤ 144	≤ 150	≤ 150	≤ 150	≤ 150	≤ 150
No. of Guide and/or Instrument Tubes	21	17	5 (Note 4)	25	25	25
Guide/Instrument Tube Thickness (in.)	≥ 0.0145	≥ 0.0140	≥ 0.0400	≥ 0.016	≥ 0.014	≥ 0.020

Table 2.1-2 (page 4 of 4)
PWR FUEL ASSEMBLY CHARACTERISTICS

Notes:

1. All dimensions are design nominal values. Maximum and minimum dimensions are specified to bound variations in design nominal values among fuel assemblies within a given array/class.

2. Deleted.

3. Design initial uranium weight is the nominal uranium weight specified for each assembly by the fuel manufacturer or reactor user. For each PWR fuel assembly, the total uranium weight limit specified in this table may be increased up to 2.0 percent for comparison with users' fuel records to account for manufacturer's tolerances.

4. Each guide tube replaces four fuel rods.

5. Soluble boron concentration per LCO 3.3.1.

6. This fuel assembly array/class includes only the Indian Point Unit 1 fuel assembly. This fuel assembly has two pitches in different sectors of the assembly. These pitches are 0.441 inches and 0.453 inches.

7. For those MPCs loaded with both INTACT FUEL ASSEMBLIES and DAMAGED FUEL ASSEMBLIES or FUEL DEBRIS, the maximum initial enrichment of the INTACT FUEL ASSEMBLIES, DAMAGED FUEL ASSEMBLIES and FUEL DEBRIS is 4.0 wt.% ^{235}U.

Table 2.1-3 (page 1 of 5)
BWR FUEL ASSEMBLY CHARACTERISTICS (Note 1)

Fuel Assembly Array/Class	**6x6A**	**6x6B**	**6x6C**	**7x7A**	**7x7B**	**8x8A**
Clad Material	ZR	ZR	ZR	ZR	ZR	ZR
Design Initial U (kg/assy.) (Note 3)	≤ 110	≤ 110	≤ 110	≤ 100	≤ 198	≤ 120
Maximum PLANAR-AVERAGE INITIAL ENRICHMENT (wt.% ^{235}U) (Note 14)	≤ 2.7	≤ 2.7 for the UO_2 rods. See Note 4 for MOX rods	≤ 2.7	≤ 2.7	≤ 4.2	≤ 2.7
Initial Maximum Rod Enrichment (wt.% ^{235}U)	≤ 4.0	≤ 4.0	≤ 4.0	≤ 5.5	≤ 5.0	≤ 4.0
No. of Fuel Rod Locations	35 or 36	35 or 36 (up to 9 MOX rods)	36	49	49	63 or 64
Fuel Rod Clad O.D. (in.)	≥ 0.5550	≥ 0.5625	≥ 0.5630	≥ 0.4860	≥ 0.5630	≥ 0.4120
Fuel Rod Clad I.D. (in.)	≤ 0.5105	≤ 0.4945	≤ 0.4990	≤ 0.4204	≤ 0.4990	≤ 0.3620
Fuel Pellet Dia. (in.)	≤ 0.4980	≤ 0.4820	≤ 0.4880	≤ 0.4110	≤ 0.4910	≤ 0.3580
Fuel Rod Pitch (in.)	≤ 0.710	≤ 0.710	≤ 0.740	≤ 0.631	≤ 0.738	≤ 0.523
Active Fuel Length (in.)	≤ 120	≤ 120	≤ 77.5	≤ 80	≤ 150	≤ 120
No. of Water Rods (Note 11)	1 or 0	1 or 0	0	0	0	1 or 0
Water Rod Thickness (in.)	> 0	> 0	N/A	N/A	N/A	≥ 0
Channel Thickness (in.)	≤ 0.060	≤ 0.060	≤ 0.060	≤ 0.060	≤ 0.120	≤ 0.100

Table 2.1-3 (2 of 5)
BWR FUEL ASSEMBLY CHARACTERISTICS (Note 1)

Fuel Assembly Array/Class	**8x8B**	**8x8C**	**8x8D**	**8x8E**	**8x8F**	**9x9A**
Clad Material	ZR	ZR	ZR	ZR	ZR	ZR
Design Initial U (kg/assy.) (Note 3)	≤ 192	≤ 190	≤ 190	< 190	≤ 191	≤ 180
Maximum PLANAR-AVERAGE INITIAL ENRICHMENT (wt.% ^{235}U) (Note 14)	≤ 4.2	≤ 4.2	≤ 4.2	≤ 4.2	≤ 4.0	≤ 4.2
Initial Maximum Rod Enrichment (wt.% ^{235}U)	≤ 5.0	≤ 5.0	≤ 5.0	≤ 5.0	≤ 5.0	≤ 5.0
No. of Fuel Rod Locations	63 or 64	62	60 or 61	59	64	74/66 (Note 5)
Fuel Rod Clad O.D. (in.)	≥ 0.4840	≥ 0.4830	≥ 0.4830	≥ 0.4930	≥ 0.4576	≥ 0.4400
Fuel Rod Clad I.D. (in.)	≤ 0.4295	≤ 0.4250	≤ 0.4230	≤ 0.4250	≤ 0.3996	≤ 0.3840
Fuel Pellet Dia. (in.)	≤ 0.4195	≤ 0.4160	≤ 0.4140	≤ 0.4160	≤ 0.3913	≤ 0.3760
Fuel Rod Pitch (in.)	≤ 0.642	≤ 0.641	≤ 0.640	≤ 0.640	≤ 0.609	≤ 0.566
Design Active Fuel Length (in.)	≤ 150	≤ 150	≤ 150	≤ 150	≤ 150	≤ 150
No. of Water Rods (Note 11)	1 or 0	2	1 - 4 (Note 7)	5	N/A (Note 12)	2
Water Rod Thickness (in.)	≥ 0.034	> 0.00	> 0.00	≥ 0.034	≥ 0.0315	> 0.00
Channel Thickness (in.)	≤ 0.120	≤ 0.120	≤ 0.120	≤ 0.100	≤ 0.055	≤ 0.120

Table 2.1-3 (page 3 of 5)
BWR FUEL ASSEMBLY CHARACTERISTICS (Note 1)

Fuel Assembly Array/Class	**9x9B**	**9x9C**	**9x9D**	**9x9E (Note 13)**	**9x9F (Note 13)**	**9x9G**
Clad Material	ZR	ZR	ZR	ZR	ZR	ZR
Design Initial U (kg/assy.) (Note 3)	≤ 180	≤ 182	≤ 182	≤ 183	≤ 183	≤ 164
Maximum PLANAR-AVERAGE INITIAL ENRICHMENT (wt.% ^{235}U) (Note 14)	≤ 4.2	≤ 4.2	≤ 4.2	≤ 4.0	≤ 4.0	≤ 4.2
Initial Maximum Rod Enrichment (wt.% ^{235}U)	≤ 5.0	≤ 5.0	≤ 5.0	≤ 5.0	≤ 5.0	≤ 5.0
No. of Fuel Rod Locations	72	80	79	76	76	72
Fuel Rod Clad O.D. (in.)	≥ 0.4330	≥ 0.4230	≥ 0.4240	≥ 0.4170	≥ 0.4430	≥ 0.4240
Fuel Rod Clad I.D. (in.)	≤ 0.3810	≤ 0.3640	≤ 0.3640	≤ 0.3640	≤ 0.3860	≤ 0.3640
Fuel Pellet Dia. (in.)	≤ 0.3740	≤ 0.3565	≤ 0.3565	≤ 0.3530	≤ 0.3745	≤ 0.3565
Fuel Rod Pitch (in.)	≤ 0.572	≤ 0.572	≤ 0.572	≤ 0.572	≤ 0.572	≤ 0.572
Design Active Fuel Length (in.)	≤ 150	≤ 150	≤ 150	≤ 150	≤ 150	≤ 150
No. of Water Rods (Note 11)	1 (Note 6)	1	2	5	5	1 (Note 6)
Water Rod Thickness (in.)	> 0.00	≥ 0.020	≥ 0.0300	≥ 0.0120	≥ 0.0120	≥ 0.0320
Channel Thickness (in.)	≤ 0.120	≤ 0.100	≤ 0.100	≤ 0.120	≤ 0.120	≤ 0.120

Table 2.1-3 (page 4 of 5)
BWR FUEL ASSEMBLY CHARACTERISTICS (Note 1)

Fuel Assembly Array/Class	10x10A	10x10B	10x10C	10x10D	10x10E
Clad Material	ZR	ZR	ZR	SS	SS
Design Initial U (kg/assy.) (Note 3)	≤ 188	≤ 188	≤ 179	≤ 125	≤ 125
Maximum PLANAR-AVERAGE INITIAL ENRICHMENT (wt.% ^{235}U) (Note 14)	≤ 4.2	≤ 4.2	≤ 4.2	≤ 4.0	≤ 4.0
Initial Maximum Rod Enrichment (wt.% ^{235}U)	≤ 5.0	≤ 5.0	≤ 5.0	≤ 5.0	≤ 5.0
No. of Fuel Rod Locations	92/78 (Note 8)	91/83 (Note 9)	96	100	96
Fuel Rod Clad O.D. (in.)	≥ 0.4040	≥ 0.3957	≥ 0.3780	≥ 0.3960	≥ 0.3940
Fuel Rod Clad I.D. (in.)	≤ 0.3520	≤ 0.3480	≤ 0.3294	≤ 0.3560	≤ 0.3500
Fuel Pellet Dia. (in.)	≤ 0.3455	≤ 0.3420	≤ 0.3224	≤ 0.3500	≤ 0.3430
Fuel Rod Pitch (in.)	≤ 0.510	≤ 0.510	≤ 0.488	≤ 0.565	≤ 0.557
Design Active Fuel Length (in.)	≤ 150	≤ 150	≤ 150	≤ 83	≤ 83
No. of Water Rods (Note 11)	2	1 (Note 6)	5 (Note 10)	0	4
Water Rod Thickness (in.)	≥ 0.0300	> 0.00	≥ 0.031	N/A	≥ 0.022
Channel Thickness (in.)	≤ 0.120	≤ 0.120	≤ 0.055	≤ 0.080	≤ 0.080

Table 2.1-3 (page 5 of 5)
BWR FUEL ASSEMBLY CHARACTERISTICS

Notes:

1. All dimensions are design nominal values. Maximum and minimum dimensions are specified to bound variations in design nominal values among fuel assemblies within a given array/class.

2. Deleted.

3. Design initial uranium weight is the nominal uranium weight specified for each assembly by the fuel manufacturer or reactor user. For each BWR fuel assembly, the total uranium weight limit specified in this table may be increased up to 1.5 percent for comparison with users' fuel records to account for manufacturer tolerances.

4. $\leq$ 0.635 wt. % ^{235}U and $\leq$ 1.578 wt. % total fissile plutonium (^{239}Pu and ^{241}Pu), (wt. % of total fuel weight, i.e., UO_2 plus PuO_2).

5. This assembly class contains 74 total rods; 66 full length rods and 8 partial length rods.

6. Square, replacing nine fuel rods.

7. Variable.

8. This assembly contains 92 total fuel rods; 78 full length rods and 14 partial length rods.

9. This assembly class contains 91 total fuel rods; 83 full length rods and 8 partial length rods.

10. One diamond-shaped water rod replacing the four center fuel rods and four rectangular water rods dividing the assembly into four quadrants.

11. These rods may also be sealed at both ends and contain Zr material in lieu of water.

12. This assembly is known as "QUAD+." It has four rectangular water cross segments dividing the assembly into four quadrants.

13. For the SPC 9x9-5 fuel assembly, each fuel rod must meet either the 9x9E or the 9x9F set of limits for clad O.D., clad I.D., and pellet diameter.

14. For those MPCs loaded with both INTACT FUEL ASSEMBLIES and DAMAGED FUEL ASSEMBLIES or FUEL DEBRIS, the maximum PLANAR AVERAGE INITIAL ENRICHMENT for the INTACT FUEL ASSEMBLIES is limited to 3.7 wt.% ^{235}U, as applicable.

Table 2.1-4

TABLE DELETED

Table 2.1-5

TABLE DELETED

Table 2.1-6 (page 1 of 2)

TABLE DELETED

Table 2.1-6 (page 2 of 2)

TABLE DELETED

Table 2.1-7 (page 1 of 2)

TABLE DELETED

Table 2.1-7 (page 2 of 2)

TABLE DELETED

Table 2.1-8
NON-FUEL HARDWARE COOLING AND AVERAGE BURNUP (Notes 1, 2, and 3)

Post-irradiation Cooling Time (years)	INSERTS (Note 4) BURNUP (MWD/MTU)	GUIDE TUBE HARDWARE (Note 5) BURNUP (MWD/MTU)	CONTROL COMPONENT (Note 6) BURNUP (MWD/MTU)	APSR BURNUP (MWD/MTU)
≥ 3	≤ 24,635	NA (Note 7)	NA	NA
≥ 4	≤ 30,000	≤ 20,000	NA	NA
≥ 5	≤ 36,748	≤ 25,000	≤ 630,000	≤ 45,000
≥ 6	≤ 44,102	≤ 30,000	-	≤ 54,500
≥ 7	≤ 52,900	≤ 40,000	-	≤ 68,000
≥ 8	≤ 60,000	≤ 45,000	-	≤ 83,000
≥ 9	-	≤ 50,000	-	≤ 111,000
≥ 10	-	≤ 60,000	-	≤ 180,000
≥ 11	-	≤ 75,000	-	≤ 630,000
≥ 12	-	≤ 90,000	-	-
≥ 13	-	≤ 180,000	-	-
≥ 14	-	≤ 630,000	-	-

Notes:
1. Burnups for NON-FUEL HARDWARE are to be determined based on the burnup and uranium mass of the fuel assemblies in which the component was inserted during reactor operation.
2. Linear interpolation between points is permitted, except that TPD and APSR burnups > 180,000 MWD/MTU and ≤ 630,000 MWD/MTU must be cooled ≥ 14 years and ≥ 11 years, respectively.
3. Applicable to uniform loading and regionalized loading.
4. Includes Burnable Poison Rod Assemblies (BPRAs), Wet Annular Burnable Absorbers (WABAs), and vibration suppressor inserts..
5. Includes Thimble Plug Devices (TPDs), water displacement guide tube plugs, and orifice rod assemblies.
6. Includes Control Rod Assemblies (CRAs), Control Element Assemblies (CEAs), and Rod Cluster Control Assemblies (RCCAs).
7. NA means not authorized for loading at this cooling time.

2.4 Decay Heat, Burnup, and Cooling Time Limits for ZR-Clad Fuel

This section provides the limits on ZR-clad fuel assembly decay heat, burnup, and cooling time for storage in the HI-STORM 100 System. A detailed discussion of how to calculate the limits and verify compliance, including examples, is provided in Chapter 12 of the HI-STORM 100 FSAR.

2.4.1 Uniform Fuel Loading Decay Heat Limits for ZR-clad fuel

Table 2.4-1 provides the maximum allowable decay heat per fuel storage location for ZR-clad fuel in uniform fuel loading for each MPC model.

Table 2.4-1

Maximum Allowable Decay Heat per Fuel Storage Location
(Uniform Loading, ZR-Clad)

MPC Model	**Decay Heat per Fuel Storage Location** (kW)
Intact Fuel Assemblies	
MPC-24	≤ 1.157
MPC-24E/24EF	≤ 1.173
MPC-32/32F	≤ 0.898
MPC-68/68FF	≤ 0.414
Damaged Fuel Assemblies and Fuel Debris	
MPC-24	≤ 1.099
MPC-24E/24EF	≤ 1.114
MPC-32/32F	≤ 0.718
MPC-68/68FF	≤ 0.393

2.4.2 Regionalized Fuel Loading Decay Heat Limits for ZR-Clad Fuel

Table 2.4-2 provides the maximum allowable decay heat per fuel storage location for ZR-clad fuel in regionalized loading for each MPC model.

2.4.2 Regionalized Fuel Loading Decay Heat Limits for ZR-Clad Fuel (cont'd)

Table 2.4-2

Fuel Storage Regions and Maximum Decay Heat per MPC

MPC Model	Number of Fuel Storage Locations in Inner and Outer Regions	Inner Region Maximum Decay Heat per Assembly (kW)	Outer Region Maximum Decay Heat per Assembly (kW)
MPC-24	4 and 20	1.470	0.900
MPC-24E/24EF	4 and 20	1.540	0.900
MPC-32/32F	12 and 20	1.131	0.600
MPC-68/68FF	32 and 36	0.500	0.275

2.4.3 Burnup Limits as a Function of Cooling Time for ZR-Clad Fuel

The maximum allowable fuel assembly average burnup varies with the following parameters:

- Minimum fuel assembly cooling time
- Maximum fuel assembly decay heat
- Minimum fuel assembly average enrichment

The maximum allowable ZR-clad fuel assembly average burnup for a given MINIMUM ENRICHMENT is calculated as described below for minimum cooling times between 3 and 20 years using the maximum permissible decay heat determined in Section 2.4.1 or 2.4.2. Different fuel assembly average burnup limits may be calculated for different minimum enrichments (by individual fuel assembly) for use in choosing the fuel assemblies to be loaded into a given MPC.

2.4.3.1 Choose a fuel assembly minimum enrichment, E_{235}.

2.4.3.2 Calculate the maximum allowable fuel assembly average burnup for a minimum cooling time between 3 and 20 years using the equation below.

$$Bu = (A \times q) + (B \times q^2) + (C \times q^3) + [D \times (E_{235})^2] + (E \times q \times E_{235}) + (F \times q^2 \times E_{235}) + G$$

Equation 2.4.3

Where:

Bu = Maximum allowable average burnup per fuel assembly (MWD/MTU)

2.4.3 Burnup Limits as a Function of Cooling Time for ZR-Clad Fuel (cont'd)

q = Maximum allowable decay heat per fuel storage location determined in Section 2.4.1 or 2.4.2 (kW)

E_{235} = Minimum fuel assembly average enrichment (wt. % ^{235}U) (e.g., for 4.05 wt.%, use 4.05)

A through G = Coefficients from Tables 2.4-3 and 2.4-4 for the applicable fuel assembly array/class and minimum cooling time

2.4.3.3 Calculated burnup limits shall be rounded down to the nearest integer.

2.4.3.4 Calculated burnup limits greater than 68,200 MWD/MTU for PWR fuel and 65,000 MWD/MTU for BWR must be reduced to be equal to these values.

2.4.3.5 Linear interpolation of calculated burnups between cooling times for a given fuel assembly maximum decay heat and minimum enrichment is permitted. For example, the allowable burnup for a cooling time of 4.5 years may be interpolated between those burnups calculated for 4 year and 5 years.

2.4.3.6 Each ZR-clad fuel assembly to be stored must have a MINIMUM ENRICHMENT greater than or equal to the value used in Step 2.4.3.2.

2.4.4 When complying with the maximum fuel storage location decay heat limits, users must account for the decay heat from both the fuel assembly and any NON-FUEL HARDWARE, as applicable for the particular fuel storage location, to ensure the decay heat emitted by all contents in a storage location does not exceed the limit.

Table 2.4-3 (Page 1 of 8)

PWR Fuel Assembly Cooling Time-Dependent Coefficients
(ZR-Clad Fuel)

Cooling Time (years)	Array/Class 14x14A						
	A	B	C	D	E	F	G
≥ 3	20277.1	303.592	-68.329	-139.41	2993.67	-498.159	-615.411
≥ 4	35560.1	-6034.67	985.415	-132.734	3578.92	-723.721	-609.84
≥ 5	48917.9	-14499.5	2976.09	-150.707	4072.55	-892.691	-54.8362
≥ 6	59110.3	-22507	5255.61	-177.017	4517.03	-1024.01	613.36
≥ 7	67595.6	-30158.1	7746.6	-200.128	4898.71	-1123.21	716.004
≥ 8	74424.9	-36871.1	10169.4	-218.676	5203.64	-1190.24	741.163
≥ 9	81405.8	-44093.1	12910.8	-227.916	5405.34	-1223.27	250.224
≥ 10	86184.3	-49211.7	15063.4	-237.641	5607.96	-1266.21	134.435
≥ 11	92024.9	-55666.8	17779.6	-240.973	5732.25	-1282.12	-401.456
≥ 12	94775.8	-58559.7	19249.9	-246.369	5896.27	-1345.42	-295.435
≥ 13	100163	-64813.8	22045.1	-242.572	5861.86	-1261.66	-842.159
≥ 14	103971	-69171	24207	-242.651	5933.96	-1277.48	-1108.99
≥ 15	108919	-75171.1	27152.4	-243.154	6000.2	-1301.19	-1620.63
≥ 16	110622	-76715.2	28210.2	-240.235	6028.33	-1307.74	-1425.5
≥ 17	115582	-82929.7	31411.9	-235.234	5982.3	-1244.11	-1948.05
≥ 18	119195	-87323.5	33881.4	-233.28	6002.43	-1245.95	-2199.41
≥ 19	121882	-90270.6	35713.7	-231.873	6044.42	-1284.55	-2264.05
≥ 20	124649	-93573.5	37853.1	-230.22	6075.82	-1306.57	-2319.63

Table 2.4-3 (Page 2 of 8)

PWR Fuel Assembly Cooling Time-Dependent Coefficients
(ZR-Clad Fuel)

Cooling Time (years)	Array/Class 14x14B						
	A	B	C	D	E	F	G
≥ 3	18937.9	70.2997	-28.6224	-130.732	2572.36	-383.393	-858.17
≥ 4	32058.7	-4960.63	745.224	-125.978	3048.98	-551.656	-549.108
≥ 5	42626.3	-10804.1	1965.09	-139.722	3433.49	-676.643	321.88
≥ 6	51209.6	-16782.3	3490.45	-158.929	3751.01	-761.524	847.282
≥ 7	57829.9	-21982	5009.12	-180.026	4066.65	-846.272	1200.45
≥ 8	62758	-26055.3	6330.88	-196.804	4340.18	-928.336	1413.17
≥ 9	68161.4	-30827.6	7943.87	-204.454	4500.52	-966.347	1084.69
≥ 10	71996.8	-34224.3	9197.25	-210.433	4638.94	-1001.83	1016.38
≥ 11	75567.3	-37486.1	10466.9	-214.95	4759.55	-1040.85	848.169
≥ 12	79296.7	-40900.3	11799.6	-212.898	4794.13	-1040.51	576.242
≥ 13	82257.3	-43594	12935	-212.8	4845.81	-1056.01	410.807
≥ 14	83941.2	-44915.2	13641	-215.389	4953.19	-1121.71	552.724
≥ 15	87228.5	-48130	15056.9	-212.545	4951.12	-1112.5	260.194
≥ 16	90321.7	-50918.3	16285.5	-206.094	4923.36	-1106.35	-38.7487
≥ 17	92836.2	-53314.5	17481.7	-203.139	4924.61	-1109.32	-159.673
≥ 18	93872.8	-53721.4	17865.1	-202.573	4956.21	-1136.9	30.0594
≥ 19	96361.6	-56019.1	19075.9	-199.068	4954.59	-1156.07	-125.917
≥ 20	98647.5	-57795.1	19961.8	-191.502	4869.59	-1108.74	-217.603

Table 2.4-3 (Page 3 of 8)

PWR Fuel Assembly Cooling Time-Dependent Coefficients
(ZR-Clad Fuel)

Cooling Time (years)	Array/Class 14x14C						
	A	B	C	D	E	F	G
≥ 3	19176.9	192.012	-66.7595	-138.112	2666.73	-407.664	-1372.41
≥ 4	32040.3	-4731.4	651.014	-124.944	3012.63	-530.456	-890.059
≥ 5	43276.7	-11292.8	2009.76	-142.172	3313.91	-594.917	-200.195
≥ 6	51315.5	-16920.5	3414.76	-164.287	3610.77	-652.118	463.041
≥ 7	57594.7	-21897.6	4848.49	-189.606	3940.67	-729.367	781.46
≥ 8	63252.3	-26562.8	6273.01	-199.974	4088.41	-732.054	693.879
≥ 9	67657.5	-30350.9	7533.4	-211.77	4283.39	-772.916	588.456
≥ 10	71834.4	-34113.7	8857.32	-216.408	4383.45	-774.982	380.243
≥ 11	75464.1	-37382.1	10063	-218.813	4460.69	-776.665	160.668
≥ 12	77811.1	-39425.1	10934.3	-225.193	4604.68	-833.459	182.463
≥ 13	81438.3	-42785.4	12239.9	-220.943	4597.28	-803.32	-191.636
≥ 14	84222.1	-45291.6	13287.9	-218.366	4608.13	-791.655	-354.59
≥ 15	86700.1	-47582.6	14331.2	-218.206	4655.34	-807.366	-487.316
≥ 16	88104.7	-48601.1	14927.9	-219.498	4729.97	-849.446	-373.196
≥ 17	91103.3	-51332.5	16129	-212.138	4679.91	-822.896	-654.296
≥ 18	93850.4	-53915.8	17336.9	-207.666	4652.65	-799.697	-866.307
≥ 19	96192.9	-55955.8	18359.3	-203.462	4642.65	-800.315	-1007.75
≥ 20	97790.4	-57058.1	19027.7	-200.963	4635.88	-799.721	-951.122

Table 2.4-3 (Page 4 of 8)

PWR Fuel Assembly Cooling Time-Dependent Coefficients
(ZR-Clad Fuel)

Cooling Time (years)	Array/Class 15x15A/B/C						
	A	B	C	D	E	F	G
≥ 3	15789.2	119.829	-21.8071	-127.422	2152.53	-267.717	-580.768
≥ 4	26803.8	-3312.93	415.027	-116.279	2550.15	-386.33	-367.168
≥ 5	36403.6	-7831.93	1219.66	-126.065	2858.32	-471.785	326.863
≥ 6	44046.1	-12375.9	2213.52	-145.727	3153.45	-539.715	851.971
≥ 7	49753.5	-16172.6	3163.61	-166.946	3428.38	-603.598	1186.31
≥ 8	55095.4	-20182.5	4287.03	-183.047	3650.42	-652.92	1052.4
≥ 9	58974.4	-23071.6	5156.53	-191.718	3805.41	-687.18	1025
≥ 10	62591.8	-25800.8	5995.95	-195.105	3884.14	-690.659	868.556
≥ 11	65133.1	-27747.4	6689	-203.095	4036.91	-744.034	894.607
≥ 12	68448.4	-30456	7624.9	-202.201	4083.52	-753.391	577.914
≥ 13	71084.4	-32536.4	8381.78	-201.624	4117.93	-757.16	379.105
≥ 14	73459.5	-34352.3	9068.86	-197.988	4113.16	-747.015	266.536
≥ 15	75950.7	-36469.4	9920.52	-199.791	4184.91	-779.222	57.9429
≥ 16	76929.1	-36845.6	10171.3	-197.88	4206.24	-794.541	256.099
≥ 17	79730	-39134.8	11069.4	-190.865	4160.42	-773.448	-42.6853
≥ 18	81649.2	-40583	11736.1	-187.604	4163.36	-785.838	-113.614
≥ 19	83459	-41771.8	12265.9	-181.461	4107.51	-758.496	-193.442
≥ 20	86165.4	-44208.8	13361.2	-178.89	4107.62	-768.671	-479.778

Table 2.4-3 (Page 5 of 8)

PWR Fuel Assembly Cooling Time-Dependent Coefficients
(ZR-Clad Fuel)

Cooling Time (years)	Array/Class 15x15D/E/F/H						
	A	B	C	D	E	F	G
≥ 3	15192.5	50.5722	-12.3042	-126.906	2009.71	-235.879	-561.574
≥ 4	25782.5	-3096.5	369.096	-113.289	2357.75	-334.695	-254.964
≥ 5	35026.5	-7299.87	1091.93	-124.619	2664	-414.527	470.916
≥ 6	42234.9	-11438.4	1967.63	-145.948	2945.81	-474.981	1016.84
≥ 7	47818.4	-15047	2839.22	-167.273	3208.95	-531.296	1321.12
≥ 8	52730.7	-18387.2	3702.43	-175.057	3335.58	-543.232	1223.61
≥ 9	56254.6	-20999.9	4485.93	-190.489	3547.98	-600.64	1261.55
≥ 10	59874.6	-23706.5	5303.88	-193.807	3633.01	-611.892	1028.63
≥ 11	62811	-25848.4	5979.64	-194.997	3694.14	-618.968	862.738
≥ 12	65557.6	-27952.4	6686.74	-198.224	3767.28	-635.126	645.139
≥ 13	67379.4	-29239.2	7197.49	-200.164	3858.53	-677.958	652.601
≥ 14	69599.2	-30823.8	7768.51	-196.788	3868.2	-679.88	504.443
≥ 15	71806.7	-32425	8360.38	-191.935	3851.65	-669.917	321.146
≥ 16	73662.6	-33703.5	8870.78	-187.366	3831.59	-658.419	232.335
≥ 17	76219.8	-35898.1	9754.72	-189.111	3892.07	-694.244	-46.924
≥ 18	76594.4	-35518.2	9719.78	-185.11	3897.04	-712.82	236.047
≥ 19	78592.7	-36920.8	10316.5	-179.54	3865.84	-709.551	82.478
≥ 20	80770.5	-38599.9	11051.3	-175.106	3858.67	-723.211	-116.014

Table 2.4-3 (Page 6 of 8)

PWR Fuel Assembly Cooling Time-Dependent Coefficients
(ZR-Clad Fuel)

Cooling Time (years)	Array/Class 16X16A						
	A	B	C	D	E	F	G
≥ 3	17038.2	158.445	-37.6008	-136.707	2368.1	-321.58	-700.033
≥ 4	29166.3	-3919.95	508.439	-125.131	2782.53	-455.722	-344.199
≥ 5	40285	-9762.36	1629.72	-139.652	3111.83	-539.804	139.67
≥ 6	48335.7	-15002.6	2864.09	-164.702	3444.97	-614.756	851.706
≥ 7	55274.9	-20190	4258.03	-185.909	3728.11	-670.841	920.035
≥ 8	60646.6	-24402.4	5483.54	-199.014	3903.29	-682.26	944.913
≥ 9	64663.2	-27753.1	6588.21	-215.318	4145.34	-746.822	967.914
≥ 10	69306.9	-31739.1	7892.13	-218.898	4237.04	-746.815	589.277
≥ 11	72725.8	-34676.6	8942.26	-220.836	4312.93	-750.85	407.133
≥ 12	76573.8	-38238.7	10248.1	-224.934	4395.85	-757.914	23.7549
≥ 13	78569	-39794.3	10914.9	-224.584	4457	-776.876	69.428
≥ 14	81559.4	-42453.6	11969.6	-222.704	4485.28	-778.427	-203.031
≥ 15	84108.6	-44680.4	12897.8	-218.387	4460	-746.756	-329.078
≥ 16	86512.2	-46766.8	13822.8	-216.278	4487.79	-759.882	-479.729
≥ 17	87526.7	-47326.2	14221	-218.894	4567.68	-805.659	-273.692
≥ 18	90340.3	-49888.6	15349.8	-212.139	4506.29	-762.236	-513.316
≥ 19	93218.2	-52436.7	16482.4	-207.653	4504.12	-776.489	-837.1
≥ 20	95533.9	-54474.1	17484.2	-203.094	4476.21	-760.482	-955.662

Table 2.4-3 (Page 7 of 8)

PWR Fuel Assembly Cooling Time-Dependent Coefficients
(ZR-Clad Fuel)

Cooling Time (years)	Array/Class 17x17A						
	A	B	C	D	E	F	G
≥ 3	16784.4	3.90244	-10.476	-128.835	2256.98	-287.108	-263.081
≥ 4	28859	-3824.72	491.016	-120.108	2737.65	-432.361	-113.457
≥ 5	40315.9	-9724	1622.89	-140.459	3170.28	-547.749	425.136
≥ 6	49378.5	-15653.1	3029.25	-164.712	3532.55	-628.93	842.73
≥ 7	56759.5	-21320.4	4598.78	-190.58	3873.21	-698.143	975.46
≥ 8	63153.4	-26463.8	6102.47	-201.262	4021.84	-685.431	848.497
≥ 9	67874.9	-30519.2	7442.84	-218.184	4287.23	-754.597	723.305
≥ 10	72676.8	-34855.2	8928.27	-222.423	4382.07	-741.243	387.877
≥ 11	75623	-37457.1	9927.65	-232.962	4564.55	-792.051	388.402
≥ 12	80141.8	-41736.5	11509.8	-232.944	4624.72	-787.134	-164.727
≥ 13	83587.5	-45016.4	12800.9	-230.643	4623.2	-745.177	-428.635
≥ 14	86311.3	-47443.4	13815.2	-228.162	4638.89	-729.425	-561.758
≥ 15	87839.2	-48704.1	14500.3	-231.979	4747.67	-775.801	-441.959
≥ 16	91190.5	-51877.4	15813.2	-225.768	4692.45	-719.311	-756.537
≥ 17	94512	-55201.2	17306.1	-224.328	4740.86	-747.11	-1129.15
≥ 18	96959	-57459.9	18403.8	-220.038	4721.02	-726.928	-1272.47
≥ 19	99061.1	-59172.1	19253.1	-214.045	4663.37	-679.362	-1309.88
≥ 20	100305	-59997.5	19841.1	-216.112	4721.71	-705.463	-1148.45

Table 2.4-3 (Page 8 of 8)

PWR Fuel Assembly Cooling Time-Dependent Coefficients
(ZR-Clad Fuel)

Cooling Time (years)	Array/Class 17x17B/C						
	A	B	C	D	E	F	G
≥ 3	15526.8	18.0364	-9.36581	-128.415	2050.81	-243.915	-426.07
≥ 4	26595.4	-3345.47	409.264	-115.394	2429.48	-350.883	-243.477
≥ 5	36190.4	-7783.2	1186.37	-130.008	2769.53	-438.716	519.95
≥ 6	44159	-12517.5	2209.54	-150.234	3042.25	-489.858	924.151
≥ 7	50399.6	-16780.6	3277.26	-173.223	3336.58	-555.743	1129.66
≥ 8	55453.9	-20420	4259.68	-189.355	3531.65	-581.917	1105.62
≥ 9	59469.3	-23459.8	5176.62	-199.63	3709.99	-626.667	1028.74
≥ 10	63200.5	-26319.6	6047.8	-203.233	3783.02	-619.949	805.311
≥ 11	65636.3	-28258.3	6757.23	-214.247	3972.8	-688.56	843.457
≥ 12	68989.7	-30904.4	7626.53	-212.539	3995.62	-678.037	495.032
≥ 13	71616.6	-32962.2	8360.45	-210.386	4009.11	-666.542	317.009
≥ 14	73923.9	-34748	9037.75	-207.668	4020.13	-662.692	183.086
≥ 15	76131.8	-36422.3	9692.32	-203.428	4014.55	-655.981	47.5234
≥ 16	77376.5	-37224.7	10111.4	-207.581	4110.76	-703.37	161.128
≥ 17	80294.9	-39675.9	11065.9	-201.194	4079.24	-691.636	-173.782
≥ 18	82219.8	-41064.8	11672.1	-195.431	4043.83	-675.432	-286.059
≥ 19	84168.9	-42503.6	12309.4	-190.602	4008.19	-656.192	-372.411
≥ 20	86074.2	-43854.4	12935.9	-185.767	3985.57	-656.72	-475.953

Table 2.4-4 (Page 1 of 10)

BWR Fuel Assembly Cooling Time-Dependent Coefficients
(ZR-Clad Fuel)

Cooling Time (years)	Array/Class 7x7B						
	A	B	C	D	E	F	G
≥ 3	26409.1	28347.5	-16858	-147.076	5636.32	-1606.75	1177.88
≥ 4	61967.8	-6618.31	-4131.96	-113.949	6122.77	-2042.85	-96.7439
≥ 5	91601.1	-49298.3	17826.5	-132.045	6823.14	-2418.49	-185.189
≥ 6	111369	-80890.1	35713.8	-150.262	7288.51	-2471.1	86.6363
≥ 7	126904	-108669	53338.1	-167.764	7650.57	-2340.78	150.403
≥ 8	139181	-132294	69852.5	-187.317	8098.66	-2336.13	97.5285
≥ 9	150334	-154490	86148.1	-193.899	8232.84	-2040.37	-123.029
≥ 10	159897	-173614	100819	-194.156	8254.99	-1708.32	-373.605
≥ 11	166931	-186860	111502	-193.776	8251.55	-1393.91	-543.677
≥ 12	173691	-201687	125166	-202.578	8626.84	-1642.3	-650.814
≥ 13	180312	-215406	137518	-201.041	8642.19	-1469.45	-810.024
≥ 14	185927	-227005	148721	-197.938	8607.6	-1225.95	-892.876
≥ 15	191151	-236120	156781	-191.625	8451.86	-846.27	-1019.4
≥ 16	195761	-244598	165372	-187.043	8359.19	-572.561	-1068.19
≥ 17	200791	-256573	179816	-197.26	8914.28	-1393.37	-1218.63
≥ 18	206068	-266136	188841	-187.191	8569.56	-730.898	-1363.79
≥ 19	210187	-273609	197794	-182.151	8488.23	-584.727	-1335.59
≥ 20	213731	-278120	203074	-175.864	8395.63	-457.304	-1364.38

Table 2.4-4 (Page 2 of 10)

BWR Fuel Assembly Cooling Time-Dependent Coefficients
(ZR-Clad Fuel)

Cooling Time (years)	Array/Class 8x8B						
	A	B	C	D	E	F	G
≥ 3	28219.6	28963.7	-17616.2	-147.68	5887.41	-1730.96	1048.21
≥ 4	66061.8	-10742.4	-1961.82	-123.066	6565.54	-2356.05	-298.005
≥ 5	95790.7	-53401.7	19836.7	-134.584	7145.41	-2637.09	-298.858
≥ 6	117477	-90055.9	41383.9	-154.758	7613.43	-2612.69	-64.9921
≥ 7	134090	-120643	60983	-168.675	7809	-2183.3	-40.8885
≥ 8	148186	-149181	81418.7	-185.726	8190.07	-2040.31	-260.773
≥ 9	159082	-172081	99175.2	-197.185	8450.86	-1792.04	-381.705
≥ 10	168816	-191389	113810	-195.613	8359.87	-1244.22	-613.594
≥ 11	177221	-210599	131099	-208.3	8810	-1466.49	-819.773
≥ 12	183929	-224384	143405	-207.497	8841.33	-1227.71	-929.708
≥ 13	191093	-240384	158327	-204.95	8760.17	-811.708	-1154.76
≥ 14	196787	-252211	169664	-204.574	8810.95	-610.928	-1208.97
≥ 15	203345	-267656	186057	-208.962	9078.41	-828.954	-1383.76
≥ 16	207973	-276838	196071	-204.592	9024.17	-640.808	-1436.43
≥ 17	213891	-290411	211145	-202.169	9024.19	-482.1	-1595.28
≥ 18	217483	-294066	214600	-194.243	8859.35	-244.684	-1529.61
≥ 19	220504	-297897	219704	-190.161	8794.97	-10.9863	-1433.86
≥ 20	227821	-318395	245322	-194.682	9060.96	-350.308	-1741.16

Table 2.4-4 (Page 3 of 10)

BWR Fuel Assembly Cooling Time-Dependent Coefficients
(ZR-Clad Fuel)

Cooling Time (years)	Array/Class 8x8C/D/E						
	A	B	C	D	E	F	G
≥ 3	28592.7	28691.5	-17773.6	-149.418	5969.45	-1746.07	1063.62
≥ 4	66720.8	-12115.7	-1154	-128.444	6787.16	-2529.99	-302.155
≥ 5	96929.1	-55827.5	21140.3	-136.228	7259.19	-2685.06	-334.328
≥ 6	118190	-92000.2	42602.5	-162.204	7907.46	-2853.42	-47.5465
≥ 7	135120	-123437	62827.1	-172.397	8059.72	-2385.81	-75.0053
≥ 8	149162	-152986	84543.1	-195.458	8559.11	-2306.54	-183.595
≥ 9	161041	-177511	103020	-200.087	8632.84	-1864.4	-433.081
≥ 10	171754	-201468	122929	-209.799	8952.06	-1802.86	-755.742
≥ 11	179364	-217723	137000	-215.803	9142.37	-1664.82	-847.268
≥ 12	186090	-232150	150255	-216.033	9218.36	-1441.92	-975.817
≥ 13	193571	-249160	165997	-213.204	9146.99	-1011.13	-1119.47
≥ 14	200034	-263671	180359	-210.559	9107.54	-694.626	-1312.55
≥ 15	205581	-275904	193585	-216.242	9446.57	-1040.65	-1428.13
≥ 16	212015	-290101	207594	-210.036	9212.93	-428.321	-1590.7
≥ 17	216775	-299399	218278	-204.611	9187.86	-398.353	-1657.6
≥ 18	220653	-306719	227133	-202.498	9186.34	-181.672	-1611.86
≥ 19	224859	-314004	235956	-193.902	8990.14	145.151	-1604.71
≥ 20	228541	-320787	245449	-200.727	9310.87	-230.252	-1570.18

Table 2.4-4 (Page 4 of 10)

BWR Fuel Assembly Cooling Time-Dependent Coefficients
(ZR-Clad Fuel)

Cooling Time (years)	Array/Class 9x9A						
	A	B	C	D	E	F	G
≥ 3	30538.7	28463.2	-18105.5	-150.039	6226.92	-1876.69	1034.06
≥ 4	71040.1	-16692.2	1164.15	-128.241	7105.27	-2728.58	-414.09
≥ 5	100888	-60277.7	24150.1	-142.541	7896.11	-3272.86	-232.197
≥ 6	124846	-102954	50350.8	-161.849	8350.16	-3163.44	-91.1396
≥ 7	143516	-140615	76456.5	-185.538	8833.04	-2949.38	-104.802
≥ 8	158218	-171718	99788.2	-196.315	9048.88	-2529.26	-259.929
≥ 9	172226	-204312	126620	-214.214	9511.56	-2459.19	-624.954
≥ 10	182700	-227938	146736	-215.793	9555.41	-1959.92	-830.943
≥ 11	190734	-246174	163557	-218.071	9649.43	-1647.5	-935.021
≥ 12	199997	-269577	186406	-223.975	9884.92	-1534.34	-1235.27
≥ 13	207414	-287446	204723	-228.808	10131.7	-1614.49	-1358.61
≥ 14	215263	-306131	223440	-220.919	9928.27	-988.276	-1638.05
≥ 15	221920	-321612	239503	-217.949	9839.02	-554.709	-1784.04
≥ 16	226532	-331778	252234	-216.189	9893.43	-442.149	-1754.72
≥ 17	232959	-348593	272609	-219.907	10126.3	-663.84	-1915.3
≥ 18	240810	-369085	296809	-219.729	10294.6	-859.302	-2218.87
≥ 19	244637	-375057	304456	-210.997	10077.8	-425.446	-2127.83
≥ 20	248112	-379262	309391	-204.191	9863.67	100.27	-2059.39

Table 2.4-4 (Page 5 of 10)

BWR Fuel Assembly Cooling Time-Dependent Coefficients
(ZR-Clad Fuel)

Cooling Time (years)	Array/Class 9x9B						
	A	B	C	D	E	F	G
≥ 3	30613.2	28985.3	-18371	-151.117	6321.55	-1881.28	988.92
≥ 4	71346.6	-15922.9	631.132	-128.876	7232.47	-2810.64	-471.737
≥ 5	102131	-60654.1	23762.7	-140.748	7881.6	-3156.38	-417.979
≥ 6	127187	-105842	51525.2	-162.228	8307.4	-2913.08	-342.13
≥ 7	146853	-145834	79146.5	-185.192	8718.74	-2529.57	-484.885
≥ 8	162013	-178244	103205	-197.825	8896.39	-1921.58	-584.013
≥ 9	176764	-212856	131577	-215.41	9328.18	-1737.12	-1041.11
≥ 10	186900	-235819	151238	-218.98	9388.08	-1179.87	-1202.83
≥ 11	196178	-257688	171031	-220.323	9408.47	-638.53	-1385.16
≥ 12	205366	-280266	192775	-223.715	9592.12	-472.261	-1661.6
≥ 13	215012	-306103	218866	-231.821	9853.37	-361.449	-1985.56
≥ 14	222368	-324558	238655	-228.062	9834.57	3.47358	-2178.84
≥ 15	226705	-332738	247316	-224.659	9696.59	632.172	-2090.75
≥ 16	233846	-349835	265676	-221.533	9649.93	913.747	-2243.34
≥ 17	243979	-379622	300077	-222.351	9792.17	1011.04	-2753.36
≥ 18	247774	-386203	308873	-220.306	9791.37	1164.58	-2612.25
≥ 19	254041	-401906	327901	-213.96	9645.47	1664.94	-2786.2
≥ 20	256003	-402034	330566	-215.242	9850.42	1359.46	-2550.06

Table 2.4-4 (Page 6 of 10)

BWR Fuel Assembly Cooling Time-Dependent Coefficients
(ZR-Clad Fuel)

Cooling Time (years)	Array/Class 9x9C/D						
	A	B	C	D	E	F	G
≥ 3	30051.6	29548.7	-18614.2	-148.276	6148.44	-1810.34	1006
≥ 4	70472.7	-14696.6	-233.567	-127.728	7008.69	-2634.22	-444.373
≥ 5	101298	-59638.9	23065.2	-138.523	7627.57	-2958.03	-377.965
≥ 6	125546	-102740	49217.4	-160.811	8096.34	-2798.88	-259.767
≥ 7	143887	-139261	74100.4	-184.302	8550.86	-2517.19	-275.151
≥ 8	159633	-172741	98641.4	-194.351	8636.89	-1838.81	-486.731
≥ 9	173517	-204709	124803	-212.604	9151.98	-1853.27	-887.137
≥ 10	182895	-225481	142362	-218.251	9262.59	-1408.25	-978.356
≥ 11	192530	-247839	162173	-217.381	9213.58	-818.676	-1222.12
≥ 12	201127	-268201	181030	-215.552	9147.44	-232.221	-1481.55
≥ 13	209538	-289761	203291	-225.092	9588.12	-574.227	-1749.35
≥ 14	216798	-306958	220468	-222.578	9518.22	-69.9307	-1919.71
≥ 15	223515	-323254	237933	-217.398	9366.52	475.506	-2012.93
≥ 16	228796	-334529	250541	-215.004	9369.33	662.325	-2122.75
≥ 17	237256	-356311	273419	-206.483	9029.55	1551.3	-2367.96
≥ 18	242778	-369493	290354	-215.557	9600.71	659.297	-2589.32
≥ 19	246704	-377971	302630	-210.768	9509.41	1025.34	-2476.06
≥ 20	249944	-382059	308281	-205.495	9362.63	1389.71	-2350.49

Table 2.4-4 (Page 7 of 10)

BWR Fuel Assembly Cooling Time-Dependent Coefficients
(ZR-Clad Fuel)

Cooling Time (years)	Array/Class 9x9E/F						
	A	B	C	D	E	F	G
≥ 3	30284.3	26949.5	-16926.4	-147.914	6017.02	-1854.81	1026.15
≥ 4	69727.4	-17117.2	1982.33	-127.983	6874.68	-2673.01	-359.962
≥ 5	98438.9	-58492	23382.2	-138.712	7513.55	-3038.23	-112.641
≥ 6	119765	-95024.1	45261	-159.669	8074.25	-3129.49	221.182
≥ 7	136740	-128219	67940.1	-182.439	8595.68	-3098.17	315.544
≥ 8	150745	-156607	88691.5	-193.941	8908.73	-2947.64	142.072
≥ 9	162915	-182667	109134	-198.37	8999.11	-2531	-93.4908
≥ 10	174000	-208668	131543	-210.777	9365.52	-2511.74	-445.876
≥ 11	181524	-224252	145280	-212.407	9489.67	-2387.49	-544.123
≥ 12	188946	-240952	160787	-210.65	9478.1	-2029.94	-652.339
≥ 13	193762	-250900	171363	-215.798	9742.31	-2179.24	-608.636
≥ 14	203288	-275191	196115	-218.113	9992.5	-2437.71	-1065.92
≥ 15	208108	-284395	205221	-213.956	9857.25	-1970.65	-1082.94
≥ 16	215093	-301828	224757	-209.736	9789.58	-1718.37	-1303.35
≥ 17	220056	-310906	234180	-201.494	9541.73	-1230.42	-1284.15
≥ 18	224545	-320969	247724	-206.807	9892.97	-1790.61	-1381.9
≥ 19	226901	-322168	250395	-204.073	9902.14	-1748.78	-1253.22
≥ 20	235561	-345414	276856	-198.306	9720.78	-1284.14	-1569.18

Table 2.4-4 (Page 8 of 10)

BWR Fuel Assembly Cooling Time-Dependent Coefficients
(ZR-Clad Fuel)

Cooling Time (years)	Array/Class 9x9G						
	A	B	C	D	E	F	G
≥ 3	35158.5	26918.5	-17976.7	-149.915	6787.19	-2154.29	836.894
≥ 4	77137.2	-19760.1	2371.28	-130.934	8015.43	-3512.38	-455.424
≥ 5	113405	-77931.2	35511.2	-150.637	8932.55	-4099.48	-629.806
≥ 6	139938	-128700	68698.3	-173.799	9451.22	-3847.83	-455.905
≥ 7	164267	-183309	109526	-193.952	9737.91	-3046.84	-737.992
≥ 8	182646	-227630	146275	-210.936	10092.3	-2489.3	-1066.96
≥ 9	199309	-270496	184230	-218.617	10124.3	-1453.81	-1381.41
≥ 10	213186	-308612	221699	-235.828	10703.2	-1483.31	-1821.73
≥ 11	225587	-342892	256242	-236.112	10658.5	-612.076	-2134.65
≥ 12	235725	-370471	285195	-234.378	10604.9	118.591	-2417.89
≥ 13	247043	-404028	323049	-245.79	11158.2	-281.813	-2869.82
≥ 14	253649	-421134	342682	-243.142	11082.3	400.019	-2903.88
≥ 15	262750	-448593	376340	-245.435	11241.2	581.355	-3125.07
≥ 16	270816	-470846	402249	-236.294	10845.4	1791.46	-3293.07
≥ 17	279840	-500272	441964	-241.324	11222.6	1455.84	-3528.25
≥ 18	284533	-511287	458538	-240.905	11367.2	1459.68	-3520.94
≥ 19	295787	-545885	501824	-235.685	11188.2	2082.21	-3954.2
≥ 20	300209	-556936	519174	-229.539	10956	2942.09	-3872.87

Table 2.4-4 (Page 9 of 10)

BWR Fuel Assembly Cooling Time-Dependent Coefficients
(ZR-Clad Fuel)

Cooling Time (years)	Array/Class 10x10A/B						
	A	B	C	D	E	F	G
≥ 3	29285.4	27562.2	-16985	-148.415	5960.56	-1810.79	1001.45
≥ 4	67844.9	-14383	395.619	-127.723	6754.56	-2547.96	-369.267
≥ 5	96660.5	-55383.8	21180.4	-137.17	7296.6	-2793.58	-192.85
≥ 6	118098	-91995	42958	-162.985	7931.44	-2940.84	60.9197
≥ 7	135115	-123721	63588.9	-171.747	8060.23	-2485.59	73.6219
≥ 8	148721	-151690	84143.9	-190.26	8515.81	-2444.25	-63.4649
≥ 9	160770	-177397	104069	-197.534	8673.6	-2101.25	-331.046
≥ 10	170331	-198419	121817	-213.692	9178.33	-2351.54	-472.844
≥ 11	179130	-217799	138652	-209.75	9095.43	-1842.88	-705.254
≥ 12	186070	-232389	151792	-208.946	9104.52	-1565.11	-822.73
≥ 13	192407	-246005	164928	-209.696	9234.7	-1541.54	-979.245
≥ 14	200493	-265596	183851	-207.639	9159.83	-1095.72	-1240.61
≥ 15	205594	-276161	195760	-213.491	9564.23	-1672.22	-1333.64
≥ 16	209386	-282942	204110	-209.322	9515.83	-1506.86	-1286.82
≥ 17	214972	-295149	217095	-202.445	9292.34	-893.6	-1364.97
≥ 18	219312	-302748	225826	-198.667	9272.27	-878.536	-1379.58
≥ 19	223481	-310663	235908	-194.825	9252.9	-785.066	-1379.62
≥ 20	227628	-319115	247597	-199.194	9509.02	-1135.23	-1386.19

Table 2.4-4 (Page 10 of 10)

BWR Fuel Assembly Cooling Time-Dependent Coefficients
(ZR-Clad Fuel)

Cooling Time (years)	Array/Class 10x10C						
	A	B	C	D	E	F	G
≥ 3	31425.3	27358.9	-17413.3	-152.096	6367.53	-1967.91	925.763
≥ 4	71804	-16964.1	1000.4	-129.299	7227.18	-2806.44	-416.92
≥ 5	102685	-62383.3	24971.2	-142.316	7961	-3290.98	-354.784
≥ 6	126962	-105802	51444.6	-164.283	8421.44	-3104.21	-186.615
≥ 7	146284	-145608	79275.5	-188.967	8927.23	-2859.08	-251.163
≥ 8	162748	-181259	105859	-199.122	9052.91	-2206.31	-554.124
≥ 9	176612	-214183	133261	-217.56	9492.17	-1999.28	-860.669
≥ 10	187756	-239944	155315	-219.56	9532.45	-1470.9	-1113.42
≥ 11	196580	-260941	174536	-222.457	9591.64	-944.473	-1225.79
≥ 12	208017	-291492	204805	-233.488	10058.3	-1217.01	-1749.84
≥ 13	214920	-307772	221158	-234.747	10137.1	-897.23	-1868.04
≥ 14	222562	-326471	240234	-228.569	9929.34	-183.47	-2016.12
≥ 15	228844	-342382	258347	-226.944	9936.76	117.061	-2106.05
≥ 16	233907	-353008	270390	-223.179	9910.72	360.39	-2105.23
≥ 17	244153	-383017	304819	-227.266	10103.2	380.393	-2633.23
≥ 18	249240	-395456	321452	-226.989	10284.1	169.947	-2623.67
≥ 19	254343	-406555	335240	-220.569	10070.5	764.689	-2640.2
≥ 20	260202	-421069	354249	-216.255	10069.9	854.497	-2732.77

3.0 DESIGN FEATURES

3.1 Site

3.1.1 Site Location

The HI-STORM 100 Cask System is authorized for general use by 10 CFR Part 50 license holders at various site locations under the provisions of 10 CFR 72, Subpart K.

3.2 Design Features Important for Criticality Control

3.2.1 MPC-24

1. Flux trap size: $\geq$ 1.09 in.

2. ^{10}B loading in the neutron absorbers: $\geq$ 0.0267 g/cm^2 (Boral) and $\geq$ 0.0223 g/cm^2 (METAMIC)

3.2.2 MPC-68 and MPC-68FF

1. Fuel cell pitch: $\geq$ 6.43 in.

2. ^{10}B loading in the neutron absorbers: $\geq$ 0.0372 g/cm^2 (Boral) and $\geq$ 0.0310 g/cm^2 (METAMIC)

3.2.3 MPC-68F

1. Fuel cell pitch: $\geq$ 6.43 in.

2. ^{10}B loading in the Boral neutron absorbers: $\geq$ 0.01 g/cm^2

3.2.4 MPC-24E and MPC-24EF

1. Flux trap size:

   i. Cells 3, 6, 19, and 22: $\geq$ 0.776 inch

   ii. All Other Cells: $\geq$ 1.076 inches

2. ^{10}B loading in the neutron absorbers: $\geq$ 0.0372 g/cm^2 (Boral) and $\geq$ 0.0310 g/cm^2 (METAMIC)

3.2.5 MPC-32 and MPC-32F

1. Fuel cell pitch: $\geq$ 9.158 inches

2. ^{10}B loading in the neutron absorbers: $\geq$ 0.0372 g/cm^2 (Boral) and $\geq$ 0.0310 g/cm^2 (METAMIC)

DESIGN FEATURES

3.2 Design features Important for Criticality Control (cont'd)

3.2.6 Fuel spacers shall be sized to ensure that the active fuel region of intact fuel assemblies remains within the neutron poison region of the MPC basket with water in the MPC.

3.2.7 The B_4C content in METAMIC shall be $\leq$ 33.0 wt.%.

3.2.8 Neutron Absorber Tests

Section 9.1.5.3 of the HI-STORM 100 FSAR is hereby incorporated by reference into the HI-STORM 100 CoC. The minimum ^{10}B for the neutron absorber shall meet the minimum requirements for each MPC model specified in Sections 3.2.1 through 3.2.5 above.

3.3 Codes and Standards

The American Society of Mechanical Engineers Boiler and Pressure Vessel Code (ASME Code), 1995 Edition with Addenda through 1997, is the governing Code for the HI-STORM 100 System, as clarified in Specification 3.3.1 below, except for Code Sections V and IX. The latest effective editions of ASME Code Sections V and IX, including addenda, may be used for activities governed by those sections, provided a written reconciliation of the later edition against the 1995 Edition, including addenda, is performed by the certificate holder. American Concrete Institute (ACI) 349-85 is the governing Code for plain concrete as clarified in Appendix 1.D of the Final Safety Analysis Report for the HI-STORM 100 Cask System.

3.3.1 Alternatives to Codes, Standards, and Criteria

Table 3-1 lists approved alternatives to the ASME Code for the design of the HI-STORM 100 Cask System.

3.3.2 Construction/Fabrication Alternatives to Codes, Standards, and Criteria

Proposed alternatives to the ASME Code, Section III, 1995 Edition with Addenda through 1997 including modifications to the alternatives allowed by Specification 3.3.1 may be used on a case-specific basis when authorized by the Director of the Office of Nuclear Material Safety and Safeguards or designee. The request for such alternative should demonstrate that:

1. The proposed alternatives would provide an acceptable level of quality and safety, or

(continued)

DESIGN FEATURES

3.3.2 Construction/Fabrication Alternatives to Codes, Standards, and Criteria (cont'd)

2. Compliance with the specified requirements of the ASME Code, Section III, 1995 Edition with Addenda through 1997, would result in hardship or unusual difficulty without a compensating increase in the level of quality and safety.

Requests for alternatives shall be submitted in accordance with 10 CFR 72.4.

(continued)

Table 3-1 (page 1 of 9)
LIST OF ASME CODE ALTERNATIVES FOR HI-STORM 100 CASK SYSTEM

Component	Reference ASME Code Section/Article	Code Requirement	Alternative, Justification & Compensatory Measures
MPC, MPC basket assembly, HI-STORM OVERPACK steel structure, and HI-TRAC TRANSFER CASK steel structure	Subsection NCA	General Requirements. Requires preparation of a Design Specification, Design Report, Overpressure Protection Report, Certification of Construction Report, Data Report, and other administrative controls for an ASME Code stamped vessel.	Because the MPC, OVERPACK, and TRANSFER CASK are not ASME Code stamped vessels, none of the specifications, reports, certificates, or other general requirements specified by NCA are required. In lieu of a Design Specification and Design Report, the HI-STORM FSAR includes the design criteria, service conditions, and load combinations for the design and operation of the HI-STORM 100 System as well as the results of the stress analyses to demonstrate that applicable Code stress limits are met. Additionally, the fabricator is not required to have an ASME-certified QA program. All important-to-safety activities are governed by the NRC-approved Holtec QA program. Because the cask components are not certified to the Code, the terms "Certificate Holder" and "Inspector" are not germane to the manufacturing of NRC-certified cask components. To eliminate ambiguity, the responsibilities assigned to the Certificate Holder in the various articles of Subsections NB, NG, and NF of the Code, as applicable, shall be interpreted to apply to the NRC Certificate of Compliance (CoC) holder (and by extension, to the component fabricator) if the requirement must be fulfilled. The Code term "Inspector" means the QA/QC personnel of the CoC holder and its vendors assigned to oversee and inspect the manufacturing process.
MPC	NB-1100	Statement of requirements for Code stamping of components.	MPC enclosure vessel is designed and will be fabricated in accordance with ASME Code, Section III, Subsection NB to the maximum practical extent, but Code stamping is not required.

Table 3-1 (page 2 of 9)
LIST OF ASME CODE ALTERNATIVES FOR HI-STORM 100 CASK SYSTEM

Component	Reference ASME Code Section/Article	Code Requirement	Alternative, Justification & Compensatory Measures
MPC basket supports and lift lugs	NB-1130	NB-1132.2(d) requires that the first connecting weld of a nonpressure-retaining structural attachment to a component shall be considered part of the component unless the weld is more than 2t from the pressure-retaining portion of the component, where t is the nominal thickness of the pressure-retaining material. NB-1132.2(e) requires that the first connecting weld of a welded nonstructural attachment to a component shall conform to NB-4430 if the connecting weld is within 2t from the pressure-retaining portion of the component.	The MPC basket supports (nonpressure-retaining structural attachments)and lift lugs (nonstructural attachments (relative to the function of lifting a loaded MPC) that are used exclusively for lifting an empty MPC) are welded to the inside of the pressure-retaining MPC shell, but are not designed in accordance with Subsection NB. The basket supports and associated attachment welds are designed to satisfy the stress limits of Subsection NG and the lift lugs and associated attachment welds are designed to satisfy the stress limits of Subsection NF, as a minimum. These attachments and their welds are shown by analysis to meet the respective stress limits for their service conditions. Likewise, non-structural items, such as shield plugs, spacers, etc. if used, can be attached to pressure-retaining parts in the same manner.
MPC	NB-2000	Requires materials to be supplied by ASME-approved material supplier.	Materials will be supplied by Holtec-approved suppliers with Certified Material Test Reports (CMTRs) in accordance with NB-2000 requirements.

Table 3-1 (page 3 of 9)
LIST OF ASME CODE ALTERNATIVES FOR HI-STORM 100 CASK SYSTEM

Component	Reference ASME Code Section/Article	Code Requirement	Alternative, Justification & Compensatory Measures
MPC, MPC basket assembly, HI-STORM OVERPACK and HI-TRAC TRANSFER CASK	NB-3100 NG-3100 NF-3100	Provides requirements for determining design loading conditions, such as pressure, temperature, and mechanical loads.	These requirements are not applicable. The HI-STORM FSAR, serving as the Design Specification, establishes the service conditions and load combinations for the storage system.
MPC	NB-3350	NB-3352.3 requires, for Category C joints, that the minimum dimensions of the welds and throat thickness shall be as shown in Figure NB-4243-1.	Due to MPC basket-to-shell interface requirements, the MPC shell-to-baseplate weld joint design (designated Category C) does not include a reinforcing fillet weld or a bevel in the MPC baseplate, which makes it different than any of the representative configurations depicted in Figure NB-4243-1. The transverse thickness of this weld is equal to the thickness of the adjoining shell (1/2 inch). The weld is designed as a full penetration weld that receives VT and RT or UT, as well as final surface PT examinations. Because the MPC shell design thickness is considerably larger than the minimum thickness required by the Code, a reinforcing fillet weld that would intrude into the MPC cavity space is not included. Not including this fillet weld provides for a higher quality radiographic examination of the full penetration weld. From the standpoint of stress analysis, the fillet weld serves to reduce the local bending stress (secondary stress) produced by the gross structural discontinuity defined by the flat plate/shell junction. In the MPC design, the shell and baseplate thicknesses are well beyond that required to meet their respective membrane stress intensity limits.

Table 3-1 (page 4 of 9)
LIST OF ASME CODE ALTERNATIVES FOR HI-STORM 100 CASK SYSTEM

Component	Reference ASME Code Section/Article	Code Requirement	Alternative, Justification & Compensatory Measures
MPC, MPC Basket Assembly, HI-STORM OVERPACK steel structure, and HI-TRAC TRANSFER CASK steel structure	NB-4120 NG-4120 NF-4120	NB-4121.2, NG-4121.2, and NF-4121.2 provide requirements for repetition of tensile or impact tests for material subjected to heat treatment during fabrication or installation.	In-shop operations of short duration that apply heat to a component, such as plasma cutting of plate stock, welding, machining, coating, and pouring of lead are not, unless explicitly stated by the Code, defined as heat treatment operations. For the steel parts in the HI-STORM 100 System components, the duration for which a part exceeds the off-normal temperature limit defined in Chapter 2 of the FSAR shall be limited to 24 hours in a particular manufacturing process (such as the HI-TRAC lead pouring process).
MPC, MPC basket assembly, HI-STORM OVERPACK steel structure, and HI-TRAC TRANSFER CASK steel structure	NB-4220 NF-4220	Requires certain forming tolerances to be met for cylindrical, conical, or spherical shells of a vessel.	The cylindricity measurements on the rolled shells are not specifically recorded in the shop travelers, as would be the case for a Code-stamped pressure vessel. Rather, the requirements on inter-component clearances (such as the MPC-to-TRANSFER CASK) are guaranteed through fixture-controlled manufacturing. The fabrication specification and shop procedures ensure that all dimensional design objectives, including inter-component annular clearances are satisfied. The dimensions required to be met in fabrication are chosen to meet the functional requirements of the dry storage components. Thus, although the post-forming Code cylindricity requirements are not evaluated for compliance directly, they are indirectly satisfied (actually exceeded) in the final manufactured components.
MPC Lid and Closure Ring Welds	NB-4243	Full penetration welds required for Category C Joints (flat head to main shell per NB-3352.3).	MPC lid and closure ring are not full penetration welds. They are welded independently to provide a redundant seal. Additionally, a weld efficiency factor of 0.45 has been applied to the analyses of these welds.

Table 3-1 (page 5 of 9)
LIST OF ASME CODE ALTERNATIVES FOR HI-STORM 100 CASK SYSTEM

Component	Reference ASME Code Section/Article	Code Requirement	Alternative, Justification & Compensatory Measures
MPC Lid to Shell Weld	NB-5230	Radiographic (RT) or ultrasonic (UT) examination required	Only UT or multi-layer liquid penetrant (PT) examination is permitted. If PT alone is used, at a minimum, it will include the root and final weld layers and each approximately 3/8 inch of weld depth.
MPC Closure Ring, Vent and Drain Cover Plate Welds	NB-5230	Radiographic (RT) or ultrasonic (UT) examination required	Root (if more than one weld pass is required) and final liquid penetrant examination to be performed in accordance with NB-5245. The closure ring provides independent redundant closure for vent and drain cover plates.
MPC Enclosure Vessel and Lid	NB-6111	All completed pressure retaining systems shall be pressure tested.	The MPC enclosure vessel is seal welded in the field following fuel assembly loading. The MPC enclosure vessel shall then be pressure tested as defined in Chapter 9. Accessibility for leakage inspections preclude a Code compliant pressure test. All MPC enclosure vessel welds (except closure ring and vent/drain cover plate) are inspected by volumetric examination, except the MPC lid-to-shell weld shall be verified by volumetric or multi-layer PT examination. If PT alone is used, at a minimum, it must include the root and final layers and each approximately 3/8 inch of weld depth. For either UT or PT, the maximum undetectable flaw size must be demonstrated to be less than the critical flaw size. The critical flaw size must be determined in accordance with ASME Section XI methods. The critical flaw size shall not cause the primary stress limits of NB-3000 to be exceeded. The inspection results, including relevant findings (indications), shall be made a permanent part of the user's records by video, photographic, or other means which provide an equivalent retrievable record of weld integrity. The video or photographic records should be taken during the final interpretation period described in ASME Section V, Article 6, T-676. The vent/drain cover plate and the closure ring welds are confirmed by liquid penetrant examination. The inspection of the weld must be performed by qualified personnel and shall meet the acceptance requirements of ASME Code Section III, NB-5350 for PT or NB-5332 for UT.

Table 3-1 (page 6 of 9)
LIST OF ASME CODE ALTERNATIVES FOR HI-STORM 100 CASK SYSTEM

Component	Reference ASME Code Section/Article	Code Requirement	Alternative, Justification & Compensatory Measures
MPC Enclosure Vessel	NB-7000	Vessels are required to have overpressure protection	No overpressure protection is provided. The function of the MPC enclosure vessel is to contain the radioactive contents under normal, off-normal, and accident conditions. The MPC vessel is designed to withstand maximum internal pressure considering 100% fuel rod failure and maximum accident temperatures.
MPC Enclosure Vessel	NB-8000	States requirements for nameplates, stamping and reports per NCA-8000.	The HI-STORM100 System is to be marked and identified in accordance with 10CFR71 and 10CFR72 requirements. Code stamping is not required. QA data package to be in accordance with Holtec approved QA program.
MPC Basket Assembly	NG-2000	Requires materials to be supplied by ASME-approved material supplier.	Materials will be supplied by Holtec-approved supplier with CMTRs in accordance with NG-2000 requirements.

Table 3-1 (page 6 of 9)
LIST OF ASME CODE ALTERNATIVES FOR HI-STORM 100 CASK SYSTEM

Component	Reference ASME Code Section/Article	Code Requirement	Alternative, Justification & Compensatory Measures
MPC Enclosure Vessel	NB-7000	Vessels are required to have overpressure protection	No overpressure protection is provided. The function of the MPC enclosure vessel is to contain the radioactive contents under normal, off-normal, and accident conditions. The MPC vessel is designed to withstand maximum internal pressure considering 100% fuel rod failure and maximum accident temperatures.
MPC Enclosure Vessel	NB-8000	States requirements for nameplates, stamping and reports per NCA-8000.	The HI-STORM100 System is to be marked and identified in accordance with 10CFR71 and 10CFR72 requirements. Code stamping is not required. QA data package to be in accordance with Holtec approved QA program.
MPC Basket Assembly	NG-2000	Requires materials to be supplied by ASME-approved material supplier.	Materials will be supplied by Holtec-approved supplier with CMTRs in accordance with NG-2000 requirements.

Table 3-1 (page 7 of 9)
LIST OF ASME CODE ALTERNATIVES FOR HI-STORM 100 CASK SYSTEM

Component	Reference ASME Code Section/Article	Code Requirement	Alternative, Justification & Compensatory Measures
MPC basket assembly	NG-4420	NG-4427(a) allows a fillet weld in any single continuous weld to be less than the specified fillet weld dimension by not more than 1/16 inch, provided that the total undersize portion of the weld does not exceed 10 percent of the length of the weld. Individual undersize weld portions shall not exceed 2 inches in length.	Modify the Code requirement (intended for core support structures) with the following text prepared to accord with the geometry and stress analysis imperatives for the fuel basket: For the longitudinal MPC basket fillet welds, the following criteria apply: 1) The specified fillet weld throat dimension must be maintained over at least 92 percent of the total weld length. All regions of undersized weld must be less than 3 inches long and separated from each other by at least 9 inches. 2) Areas of undercuts and porosity beyond that allowed by the applicable ASME Code shall not exceed 1/2 inch in weld length. The total length of undercut and porosity over any 1-foot length shall not exceed 2 inches. 3) The total weld length in which items (1) and (2) apply shall not exceed a total of 10 percent of the overall weld length. The limited access of the MPC basket panel longitudinal fillet welds makes it difficult to perform effective repairs of these welds and creates the potential for causing additional damage to the basket assembly (e.g., to the neutron absorber and its sheathing) if repairs are attempted. The acceptance criteria provided in the foregoing have been established to comport with the objectives of the basket design and preserve the margins demonstrated in the supporting stress analysis. From the structural standpoint, the weld acceptance criteria are established to ensure that any departure from the ideal, continuous fillet weld seam would not alter the primary bending stresses on which the design of the fuel baskets is predicated. Stated differently, the permitted weld discontinuities are limited in size to ensure that they remain classifiable as local stress elevators ("peak stress", F, in the ASME Code for which specific stress intensity limits do not apply).
MPC Basket Assembly	NG-8000	States requirements for nameplates, stamping and reports per NCA-8000.	The HI-STORM100 System is to be marked and identified in accordance with 10CFR71 and 10CFR72 requirements. Code stamping is not required. The MPC basket data package to be in accordance with Holtec approved QA program.
OVERPACK Steel Structure	NF-2000	Requires materials to be supplied by ASME-approved material supplier.	Materials will be supplied by Holtec-approved supplier with CMTRs in accordance with NF-2000 requirements.

Table 3-1 (page 8 of 9)
LIST OF ASME CODE ALTERNATIVES FOR HI-STORM 100 CASK SYSTEM

Component	Reference ASME Code Section/Article	Code Requirement	Alternative, Justification & Compensatory Measures
TRANSFER CASK Steel Structure	NF-2000	Requires materials to be supplied by ASME-approved material supplier.	Materials will be supplied by Holtec-approved supplier with CMTRs in accordance with NF-2000 requirements.
OVERPACK Baseplate and Lid Top Plate	NF-4441	Requires special examinations or requirements for welds where a primary member of thickness 1 inch or greater is loaded to transmit loads in the through thickness direction.	The margins of safety in these welds under loads experienced during lifting operations or accident conditions are quite large. The OVERPACK baseplate welds to the inner shell, pedestal shell, and radial plates are only loaded during lifting conditions and have large safety factors during lifting. Likewise, the top lid plate to lid shell weld has a large structural margin under the inertia loads imposed during a non-mechanistic tipover event.
OVERPACK Steel Structure	NF-3256 NF-3266	Provides requirements for welded joints.	Welds for which no structural credit is taken are identified as "Non-NF" welds in the design drawings. These non-structural welds are specified in accordance with the pre-qualified welds of AWS D1.1. These welds shall be made by welders and weld procedures qualified in accordance with AWS D1.1 or ASME Section IX. Welds for which structural credit is taken in the safety analyses shall meet the stress limits for NF-3256.2, but are not required to meet the joint configuration requirements specified in these Code articles. The geometry of the joint designs in the cask structures are based on the fabricability and accessibility of the joint, not generally contemplated by this Code section governing supports.

Table 3-1 (page 9 of 9)
LIST OF ASME CODE ALTERNATIVES FOR HI-STORM 100 CASK SYSTEM

Component	Reference ASME Code Section/Article	Code Requirement	Alternative, Justification & Compensatory Measures
HI-STORM OVERPACK and HI-TRAC TRANSFER CASK	NF-3320 NF-4720	NF-3324.6 and NF-4720 provide requirements for bolting	These Code requirements are applicable to linear structures wherein bolted joints carry axial, shear, as well as rotational (torsional) loads. The OVERPACK and TRANSFER CASK bolted connections in the structural load path are qualified by design based on the design loadings defined in the FSAR. Bolted joints in these components see no shear or torsional loads under normal storage conditions. Larger clearances between bolts and holes may be necessary to ensure shear interfaces located elsewhere in the structure engage prior to the bolts experiencing shear loadings (which occur only during side impact scenarios). Bolted joints that are subject to shear loads in accident conditions are qualified by appropriate stress analysis. Larger bolt-to-hole clearances help ensure more efficient operations in making these bolted connections, thereby minimizing time spent by operations personnel in a radiation area. Additionally, larger bolt-to-hole clearances allow interchangeability of the lids from one particular fabricated cask to another.

DESIGN FEATURES (continued)

3.4 Site-Specific Parameters and Analyses

Site-specific parameters and analyses that will require verification by the system user are, as a minimum, as follows:

1. The temperature of 80° F is the maximum average yearly temperature.

2. The allowed temperature extremes, averaged over a 3-day period, shall be greater than -40° F and less than 125° F.

3. a. The resultant horizontal acceleration (vectorial sum of two horizontal Zero Period Accelerations (ZPAs) at a three-dimensional seismic site), G_H, and vertical ZPA, G_V, on the top surface of the ISFSI pad, expressed as fractions of 'g', shall satisfy the following inequality:

$$G_H + \mu G_V \leq \mu$$

where μ is either the Coulomb friction coefficient for the cask/ISFSI pad interface or the ratio r/h, where 'r' is the radius of the cask and 'h' is the height of the cask center-of-gravity above the ISFSI pad surface. The above inequality must be met for both definitions of μ, but only applies to ISFSIs where the casks are deployed in a freestanding configuration. Unless demonstrated by appropriate testing that a higher coefficient of friction value is appropriate for a specific ISFSI, the value used shall be 0.53. If acceleration time-histories on the ISFSI pad surface are available, G_H and G_V may be the coincident values of the instantaneous net horizontal and vertical accelerations. If instantaneous accelerations are used, the inequality shall be evaluated at each time step in the acceleration time history over the total duration of the seismic event.

If this static equilibrium based inequality cannot be met, a dynamic analysis of the cask/ISFSI pad assemblage with appropriate recognition of soil/structure interaction effects shall be performed to ensure that the casks will not tip over or undergo excessive sliding under the site's Design Basis Earthquake.

Table 3-2 (not used)

(continued)

DESIGN FEATURES

3.4 Site-Specific Parameters and Analyses (continued)

b. For free-standing casks, under environmental conditions that may degrade the pad/cask interface friction (such as due to icing) the response of the casks under the site's Design Basis Earthquake shall be established using the best estimate of the friction coefficient in an appropriate analysis model. The analysis should demonstrate that the earthquake will not result in cask tipover or cause a cask to fall off the pad. In addition, impact between casks should be precluded, or should be considered an accident for which the maximum g-load experienced by the stored fuel shall be limited to 45 g's.

c. For those ISFSI sites with design basis seismic acceleration values higher than those allowed for free-standing casks, the HI-STORM 100 System shall be anchored to the ISFSI pad. The site seismic characteristics and the anchorage system shall meet the following requirements:

i. The site acceleration response spectra at the top of the ISFSI pad shall have ZPAs that meet the following inequalities:

$$G_H \leq 2.12$$

AND

$$G_V \leq 1.5$$

Where:

G_H is the vectorial sum of the two horizontal ZPAs at a three-dimensional seismic site (or the horizontal ZPA at a two-dimensional site) and G_V is the vertical ZPA.

ii. Each HI-STORM 100 dry storage cask shall be anchored with twenty-eight (28), 2-inch diameter studs and compatible nuts of material suitable for the expected ISFSI environment. The studs shall meet the following requirements:

Yield Strength at Ambient Temperature: $\geq$ 80 ksi

Ultimate Strength at Ambient Temperature: $\geq$ 125 ksi

Initial Tensile Pre-Stress: $\geq$ 55 ksi AND $\leq$ 65 ksi

NOTE: The above anchorage specifications are required for the seismic

(continued)

DESIGN FEATURES

3.4 Site-Specific Parameters and Analyses (continued)

spectra defined in item 3.4.3.b.i. Users may use fewer studs or those of different diameter to account for site-specific seismic spectra less severe than those specified above. The embedment design shall comply with Appendix B of ACI-349-97. A later edition of this Code may be used, provided a written reconciliation is performed.

iii. Embedment Concrete Compressive Strength: ≥ 4,000 psi at 28 days

4. The analyzed flood condition of 15 fps water velocity and a height of 125 feet of water (full submergence of the loaded cask) are not exceeded.

5. The potential for fire and explosion shall be addressed, based on site-specific considerations. This includes the condition that the on-site transporter fuel tank will contain no more than 50 gallons of diesel fuel while handling a loaded OVERPACK or TRANSFER CASK.

6. a. For free-standing casks, the ISFSI pad shall be verified by analysis to limit cask deceleration during design basis drop and non-mechanistic tip-over events to ≤ 45 g's at the top of the MPC fuel basket. Analyses shall be performed using methodologies consistent with those described in the HI-STORM 100 FSAR. A lift height above the ISFSI pad is not required to be established if the cask is lifted with a device designed in accordance with ANSI N14.6 and having redundant drop protection features.

   b. For anchored casks, the ISFSI pad shall be designed to meet the embedment requirements of the anchorage design. A cask tip-over event for an anchored cask is not credible. The ISFSI pad shall be verified by analysis to limit cask deceleration during a design basis drop event to ≤ 45 g's at the top of the MPC fuel basket, except as provided for in this paragraph below. Analyses shall be performed using methodologies consistent with those described in the HI-STORM 100 FSAR. A lift height above the ISFSI pad is not required to be established if the cask is lifted with a device design in accordance with ANSI N14.6 and having redundant drop protection features.

7. In cases where engineered features (i.e., berms and shield walls) are used to ensure that the requirements of 10CFR72.104(a) are met, such features are to be considered important to safety and must be evaluated to determine the applicable Quality Assurance Category.

(continued)

DESIGN FEATURES

3.4 Site-Specific Parameters and Analyses (continued)

8. LOADING OPERATIONS, TRANSPORT OPERATIONS, and UNLOADING OPERATIONS shall only be conducted with working area ambient temperatures $\geq 0°$ F.

9. For those users whose site-specific design basis includes an event or events (e.g., flood) that result in the blockage of any OVERPACK inlet or outlet air ducts for an extended period of time (i.e, longer than the total Completion Time of LCO 3.1.2), an analysis or evaluation may be performed to demonstrate adequate heat removal is available for the duration of the event. Adequate heat removal is defined as fuel cladding temperatures remaining below the short term temperature limit. If the analysis or evaluation is not performed, or if fuel cladding temperature limits are unable to be demonstrated by analysis or evaluation to remain below the short term temperature limit for the duration of the event, provisions shall be established to provide alternate means of cooling to accomplish this objective.

(continued)

DESIGN FEATURES

3.5 Cask Transfer Facility (CTF)

3.5.1 TRANSFER CASK and MPC Lifters

Lifting of a loaded TRANSFER CASK and MPC using devices that are not integral to structures governed by 10 CFR Part 50 shall be performed with a CTF that is designed, operated, fabricated, tested, inspected, and maintained in accordance with the guidelines of NUREG-0612, "Control of Heavy Loads at Nuclear Power Plants" and the below clarifications. The CTF Structure requirements below do not apply to heavy loads bounded by the regulations of 10 CFR Part 50.

3.5.2 CTF Structure Requirements

3.5.2.1 Cask Transfer Station and Stationary Lifting Devices

1. The metal weldment structure of the CTF structure shall be designed to comply with the stress limits of ASME Section III, Subsection NF, Class 3 for linear structures. The applicable loads, load combinations, and associated service condition definitions are provided in Table 3-3. All compression loaded members shall satisfy the buckling criteria of ASME Section III, Subsection NF.

2. If a portion of the CTF structure is constructed of reinforced concrete, then the factored load combinations set forth in ACI-318 (89) for the loads defined in Table 3-3 shall apply.

3. The TRANSFER CASK and MPC lifting device used with the CTF shall be designed, fabricated, operated, tested, inspected and maintained in accordance with NUREG-0612, Section 5.1.

4. The CTF shall be designed, constructed, and evaluated to ensure that if the MPC is dropped during inter-cask transfer operations, its confinement boundary would not be breached. This requirements applies to CTFs with either stationary or mobile lifting devices.

(continued)

3.5.2.2 Mobile Lift Devices

If a mobile lifting device is used as the lifting device, in lieu of a stationary lifting device, is shall meet the guidelines of NUREG- 0612, Section 5.1, with the following clarifications:

1. Mobile lifting devices shall have a minimum safety factor of two over the allowable load table for the lifting device in accordance with the guidance of NUREG-0612, Section 5.1.6(1)(a) and shall be capable of stopping and holding the load during a Design Basis Earthquake (DBE) event.

2. Mobile lifting devices shall conform to meet the requirements of ANSI B30.5, "Mobile and Locomotive Cranes," in lieu of the requirements of ANSI B30.2, "Overhead and Gantry Cranes."

3. Mobile cranes are not required to meet the requirements of NUREG-0612, Section 5.1.6(2) for new cranes.

4. Horizontal movements of the TRANSFER CASK and MPC using a mobile crane are prohibited.

(continued)

Table 3-3

Load Combinations and Service Condition Definitions for the CTF Structure (Note 1)

Load Combination	ASME III Service Condition for Definition of Allowable Stress	Comment
D* D + S	Level A	All primary load bearing members must satisfy Level A stress limits
D + M + W' (Note 2) D + F D + E D + Y	Level D	Factor of safety against overturning shall be ≥ 1.1

D = Dead load
D* = Apparent dead load
S = Snow and ice load for the CTF site
M = Tornado missile load for the CTF site
W' = Tornado wind load for the CTF site
F = Flood load for the CTF site
E = Seismic load for the CTF site
Y = Tsunami load for the CTF site

Notes:
1. The reinforced concrete portion of the CTF structure shall also meet the factored combinations of loads set forth in ACI-318(89).
2. Tornado missile load may be reduced or eliminated based on a PRA for the CTF site.

DESIGN FEATURES

3.6 Forced Helium Dehydration System

3.6.1 System Description

Use of the Forced Helium Dehydration (FHD) system, (a closed-loop system) is an alternative to vacuum drying the MPC for moderate burnup fuel (≤ 45,000 MWD/MTU) and mandatory for drying MPCs containing one or more high burnup fuel assemblies. The FHD system shall be designed for normal operation (i.e., excluding startup and shutdown ramps) in accordance with the criteria in Section 3.6.2.

3.6.2 Design Criteria

3.6.2.1 The temperature of the helium gas in the MPC shall be at least 15°F higher than the saturation temperature at coincident pressure.

3.6.2.2 The pressure in the MPC cavity space shall be ≤ 60.3 psig (75 psia).

3.6.2.3 The hourly recirculation rate of helium shall be ≥ 10 times the nominal helium mass backfilled into the MPC for fuel storage operations.

3.6.2.4 The partial pressure of the water vapor in the MPC cavity will not exceed 3 torr. The limit is met if the gas temperature at the demoisturizer outlet is verified by measurement to remain ≤ 21°F for a period of 30 minutes or if the dew point of the gas exiting the MPC is verified by measurement to remain ≤ 22.9°F for ≥ 30 minutes.

3.6.2.5 The condensing module shall be designed to de-vaporize the recirculating helium gas to a dew point ≤ 120°F.

3.6.2.6 The demoisturizing module shall be configured to be introduced into its helium conditioning function after the condensing module has been operated for the required length of time to assure that the bulk moisture vaporization in the MPC (defined as Phase 1 in FSAR Appendix 2.B) has been completed.

3.6.2.7 The helium circulator shall be sized to effect the minimum flow rate of circulation required by these design criteria.

3.6.2.8 The pre-heater module shall be engineered to ensure that the temperature of the helium gas in the MPC meets these design criteria.

(continued)

DESIGN FEATURES

3.6 Forced Helium Dehydration System (continued)

3.6.3 Fuel Cladding Temperature

A steady-state thermal analysis of the MPC under the forced helium flow scenario shall be performed using the methodology described in HI-STORM 100 FSAR Section 4.4, with due recognition of the forced convection process during FHD system operation. This analysis shall demonstrate that the peak temperature of the fuel cladding under the most adverse condition of FHD system operation, is below the peak cladding temperature limit for normal conditions of storage for the applicable fuel type (PWR or BWR) and cooling time at the start of dry storage.

3.6.4 Pressure Monitoring During FHD Malfunction

During an FHD malfunction event, described in HI-STORM 100 FSAR Section 11.1 as a loss of helium circulation, the system pressure must be monitored to ensure that the conditions listed therein are met.

DESIGN FEATURES

3.7 Supplemental Cooling System

3.7.1 System Description

The SCS is a water circulation system for cooling the MPC inside the HI-TRAC transfer cask during on-site transport. Use of the Supplemental Cooling System (SCS) is required for post-backfill HI-TRAC operations of an MPC containing one or more high burnup (> 45,000 MWD/MTU) fuel assemblies. The SCS shall be designed for normal operation (i.e., excluding startup and shutdown ramps) in accordance with the criteria in Section 3.7.2.

3.7.2 Design Criteria

3.7.2.1 The system shall consist of a skid-mounted coolant pump and an air-cooled heat exchanger.

3.7.2.2 The pump shall be sized to limit the coolant temperature rise (from annulus inlet to outlet) to a reasonably low value (20ºF) and the air-cooled heat exchanger sized for the design basis heat load at an ambient air temperature of 100ºF. The pump and aircooler fan shall be powered by electric motors with a backup power supply for uninterrupted operation.

3.7.2.3 The system shall utilize a contamination-free fluid medium in contact with the external surfaces of the MPC and inside surfaces of the HI -TRAC transfer cask to minimize corrosion.

3.7.2.4 All passive components such as tubular heat exchangers, manually operated valves and fittings shall be designed to applicable standards (TEMA, ANSI).

3.7.2.5 The heat dissipation capacity of the SCS shall be equal to or greater than the minimum necessary to ensure that the peak cladding temperature is below 400ºC (752ºF). All heat transfer surfaces in heat exchangers shall be assumed to be fouled to the maximum limits specified in a widely used heat exchanger equipment standard such as the Standards of Tubular Exchanger Manufacturers Association.

3.7.2.6 The coolant utilized to extract heat from the MPC shall be high purity water. Antifreeze may be used to prevent water from freezing if warranted by operating conditions.

DESIGN FEATURES

3.7 Supplemental Cooling System (continued)

3.7.2.7 All pressure boundaries (as defined in the ASME Boiler and Pressure Vessel Code, Section VIII Division 1) shall have pressure ratings that are greater than the maximum system operating pressure by at least 15 psi.

3.7.2.8 All ASME Code components shall comply with Section VIII Division 1 of the ASME Boiler and Pressure Vessel Code.

3.7.2.9 All gasketed and packed joints shall have a minimum design pressure rating of the pump shut-off pressure plus 15 psi.

DESIGN FEATURES

3.8 Combustible Gas Monitoring During MPC Lid Welding

During MPC lid-to-shell welding operations, combustible gas monitoring of the space under the MPC lid is required, to ensure that there is no combustible mixture present in the welding area.