NRC Regulations
[10 CFR Part 63]

Regulatory Framework for Disposal of High-Level Radioactive Wastes in a Geological Repository at Yucca Mountain, Nevada

Philip Justus
Division of High-Level Waste Repository Safety
U.S. Nuclear Regulatory Commission

In collaboration with Timothy McCartin, DHLWRS

Contents

- Regulatory Arena: Laws, government agencies, stakeholders
- NRC Regulations: Title 10-Energy, Code of Federal Regulations, Part 63 – Disposal of High-Level Radioactive Wastes in a Geologic Repository at Yucca Mountain, Nevada (10 CFR Part 63)
- Regulatory Timeframes
- Pre-closure Time-Period: Safety analysis
- Pre-closure Waste Handling
- Post-closure Performance Assessment
- NRC staff's independent capability to comprehensively review a potential license application from DOE for a high-level waste repository at Yucca Mountain, Nevada
- Summary

Objectives

- Understand the regulatory framework for the potential Geologic Repository at Yucca Mountain, Nevada
- Understand the scope of NRC's regulatory requirements for Yucca Mountain
- Explain how NRC staff is prepared to independently review a potential license application for a High-Level Waste repository at Yucca Mountain, Nevada

Regulatory Arena

- Nuclear Waste Policy Act – amended
- Roles and Responsibilities
  - Environmental Protection Agency (EPA) - standards
  - Nuclear Regulatory Commission (NRC) - regulatory authority
  - Department of Energy (DOE) - potential applicant
- Stakeholders
  - State of Nevada
  - Affected Units of Local Government
    - Nye County (location of the site)
    - Nearby Counties
  - Other States
  - Other Federal agencies (e.g., Department of Transportation, Department of Defense, Department of Interior)
  - Indian tribes
  - Electric utilities
  - Public interest groups

Yucca Mountain Potential Geological Repository Site

- 161 kilometers (100 miles) northwest of Las Vegas, Nevada
- Federal land
  - Nellis Air Force Base
  - Nevada Test Site

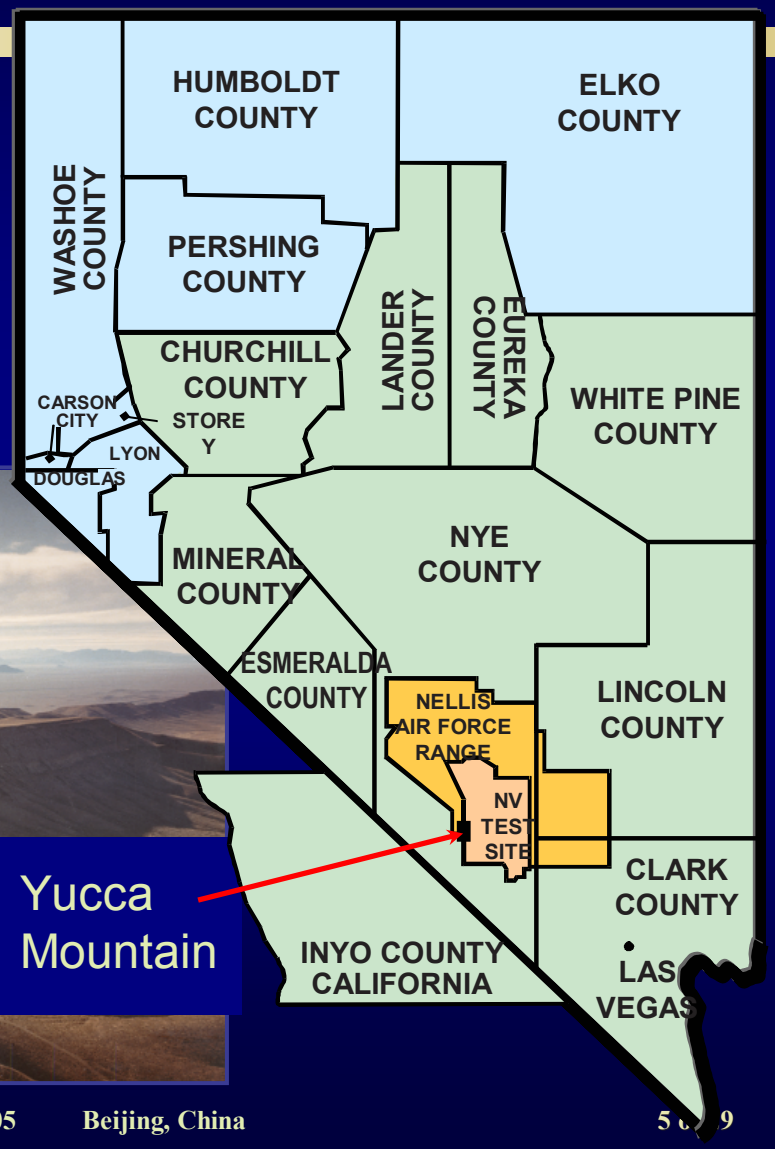

NRC Regulations

- Title 10, Code of Federal Regulations (10 CFR)
- Part 63, Disposal of High-Level Radioactive Wastes in a Geologic Repository at Yucca Mountain, Nevada
  - Risk informed
    - Focus only on significant aspects of the proposed design
    - Significance determined with a pre-closure safety assessment and post-closure performance assessment
  - Performance based
  - Pre-closure safety analysis (PCSA) per 10 CFR Part 63.21 and post-closure performance assessment (Total System Performance Assessment)
  - Consistent with Environmental Protection Agency (EPA) standard (40 CFR Part 197)

Regulatory Timeframes

- Pre-closure
  - Time before the repository is sealed
    - Operations and monitoring would be on the order of 100 years
- Post-closure
  - Time after the repository is sealed
    - Under reconsideration

Pre-closure Safety Analysis (PCSA)

- Systematic risk analysis using event tree / fault tree methods to determine event sequences
- Event sequences
  - Category 1: expected to occur one or more times
  - Category 2: chance of 1/10,000
- Performance objectives
  - Category 1 sequences taken together
    - Occupational: .05 Sv (5 rem) annual dose
    - Public: 0.15 mSv (15 mrem) annual dose
  - Category 2 sequences taken individually
    - Public: 0.05 Sv (5 rem) per event dose

Potential Yucca Mountain Facility Layout

Conceptual layout of emplacement drifts (~200 m below surface)

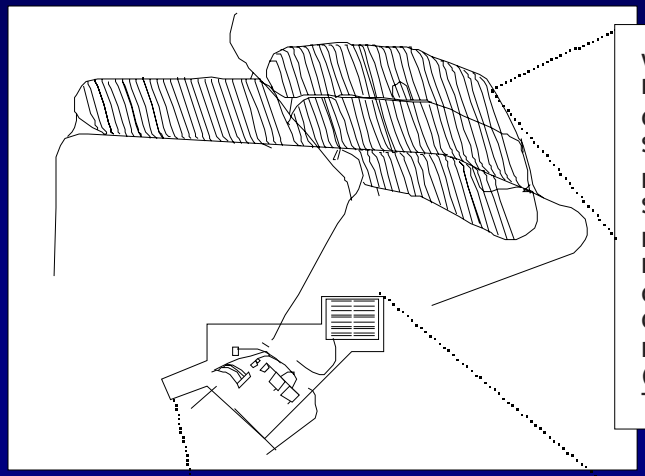

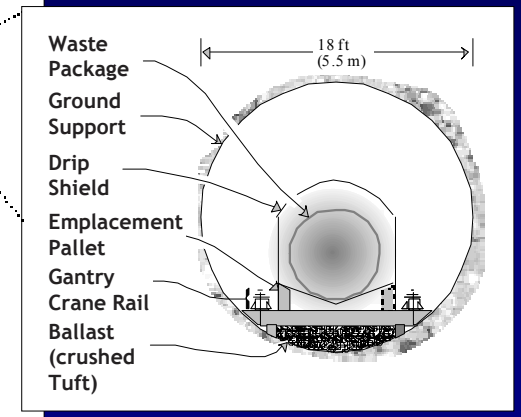

Nominal emplacement drift cross section

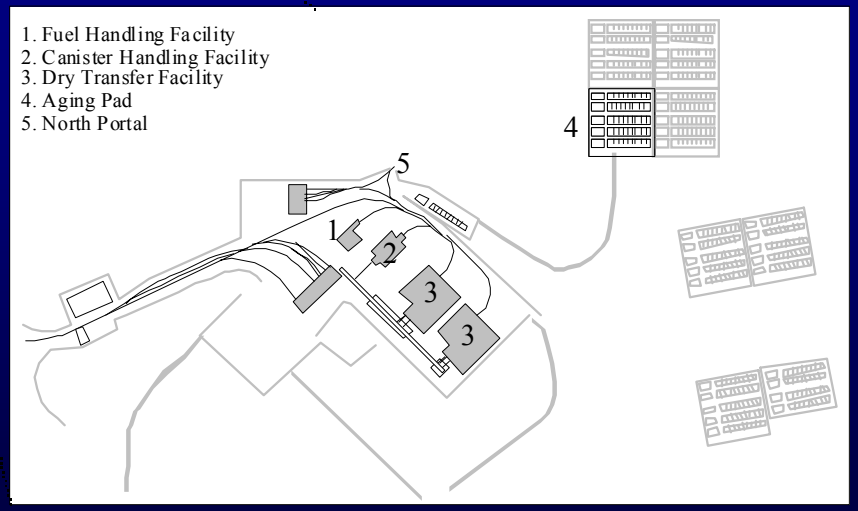

Example surface facility layout

Pre-closure Waste Handling

- Types of waste
  - Spent fuel from commercial nuclear power plants
  - DOE fuel (canisters)
  - Naval fuel (canisters)
  - High-Level Waste glass from reprocessing liquid waste
- During pre-closure, repository design must allow retrieval of waste packages
- Operations to be evaluated by a pre-closure safety analysis
  - Receipt of transportation casks
  - Transfer of High-Level Waste to waste packages
  - Emplace waste packages in the geologic repository for permanent disposal

Post-closure Performance

- Risk-informed
  - Consequence models of phenomena in repository (e.g., hydrology, chemistry, degradation of engineered barriers, thermal loads)
  - Weighted by annual probability of disruptive events (e.g., earthquake, volcano)
- Performance-based
  - Individual all pathway limit: 0.15 mSv per yr (15 mrem/yr)
  - Human Intrusion specified limit
  - Separate Groundwater Protection limits
  - Multiple barriers (at least 1 natural, 1 engineered barrier)

Post-Closure Safety Assessment Review

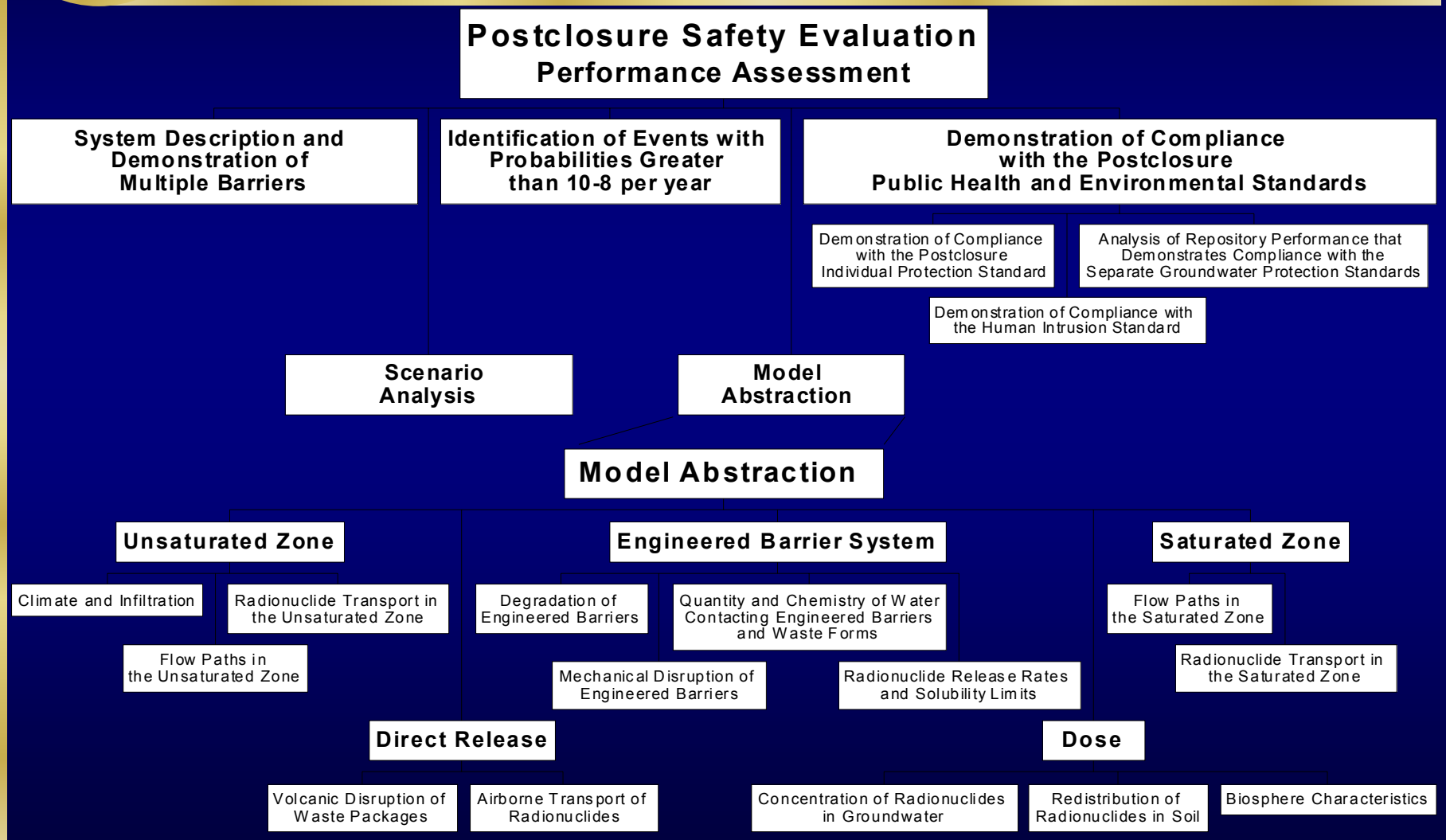

NRC Staff's Independent License Application Review Capability

- Focus on compliance with 10 CFR Part 63 Performance Objectives
  - Understand repository system behavior (technical support for assumptions, parameters, models)
  - Multiple lines of evidence (information from detailed process-level models, lab and field experiments, natural analogs)
- Use risk information
- Multiple barrier analysis
  - Identify barriers
  - Quantitative understanding of each barrier's capability (delay of release due to waste package, limited amount of water contacting waste, slow release from waste form, retardation of radionuclides in groundwater)
  - Focus on scenario analysis, event probability, model abstraction

NRC Staff's Independent License Application Review Capability, (cont'd)

- Scenario Analysis
  - Examine nominal and disruptive events
  - Review identification and screening of features, events and processes and construction of scenarios

- Model Abstraction
  - Based on prior performance assessments, knowledge of site characteristics and repository design
  - Review effort will depend on final DOE safety analysis
  - NRC acceptance criteria for each model abstraction:
    - System description and model integration
    - Data for model justification
    - Characterization and propagation of data uncertainty
    - Characterization and propagation of model uncertainty
    - Support for model abstraction output through objective comparisons

NRC Staff's Independent Review Capability, (cont'd)

- Determination of Compliance with Post-Closure Public Health and Environmental Standards
  - Apply criterion for compliance: reasonable expectation
  - Combine probability estimates from scenario analysis with estimates of consequences to estimate dose risk
  - Consider alternate conceptual models and parameter uncertainties
  - Use similar techniques for all (three) performance objectives
- Sensitivity Analyses
  - Insight into differences between NRC and DOE approaches and results
  - Risk insights into overall performance
- Develop methods, models, codes to support requests for information and supplemental analyses from DOE and others

Summary

- NRC is using risk-informed and performance-based regulations for evaluating safety of repository operations and post-closure performance
- NRC's licensing process includes many stakeholders and provides opportunities for public hearings
- The NRC has an independent technical review capability to thoroughly review a license application from DOE for a potential geologic repository at Yucca Mountain, Nevada

Optional Slides

The following slides provide a reference to each section of 10 CFR Part 63 and a brief description of selected sections:

Structure of 10 CFR Part 63

- Subpart A - General Provisions
- Subpart B - Licenses
- Subpart C - Participation by State, Affected Units of Local Government, and Affected Indian Tribes
- Subpart D - Records, Reports, Tests, and Inspections
- Subpart E - Technical Criteria
- Subpart F - Performance Confirmation Program
- Subpart G - Quality Assurance

Structure of 10 CFR Part 63, continued

- Subpart H - Training and Certification of Personnel
- Subpart I - Emergency Planning Criteria
- Subpart J - Violations
- Subpart K - Preclosure Public Health and Environmental Standards
- Subpart L - Postclosure Public Health and Environmental Standards

Subpart A
General Provisions

- Definitions
  - barrier
  - event sequence (category 1 and 2)
  - geologic repository

- Completeness and accuracy of information (63.10)
  - information must be complete and accurate in all material respects

Subpart B
Licenses

- Content of Application (63.21)
- Environmental Impact Statement (63.21, 63.24)
- Construction Authorization (63.31) – Amendments (63.33)
- License to Receive and Possess (63.41) – Amendments (63.45)
- Changes, Tests, and Experiments (63.44)
  - NRC notification
- Activities requiring license amendment (63.46)
- Amendment for Closure (63.51)
- Termination of the License (63.52)

Subpart C

Participation by State, Affected Units of Local Governments, and Affected Indian Tribes

- Provision of information (63.61)
  - plans/determinations with respect to Yucca Mountain
- Participation in license reviews (63.62 and 63.63)
  - NRC staff available to consult on status of site characterization
  - provided in subpart J of 10 CFR Part 2
  - NRC may fund activities as authorized by law that enhance communications and contribute to staff review

Subpart D

Records, Reports, Tests, and Inspections

- Reports of deficiencies (63.73)

Subpart E
Technical Criteria

- Purpose and nature of findings (63.101)
- Concepts (63.102)
- Preclosure Performance Objectives
  - compliance with Part 20 [63.111(a)(1)]
  - numerical guides for design [63.111(b)]
  - retrievability [63.111(e)]
  - preclosure safety analysis (63.112)
- Postclosure Performance Objectives
  - multiple barriers and EPA limits (63.113)
  - performance assessment (63.114)
  - demonstration of multiple barriers (63.115)
- Land Ownership and Control (63.121)

Subpart F

Performance Confirmation Program

- Provide data where practicable (63.131)
- Barriers functioning as intended and anticipated
- Monitors and analyzes changes from the baseline condition of parameters that could affect performance

Subpart G
Quality Assurance

- Quality assurance criteria (63.142)
  - - quality assurance program
  - - design control
  - - document control
  - - control of purshased material, equipment, services
  - - corrective action
  - - quality assurance records
  - - audits

Subpart H
Training and Certification of Personnel

- General requirements (63.151)
- Training and certification (63.152)
- Physical condition and health requirements (63.153)

Subpart I
Emergency Planning Criteria

- Cope with radiological accidents (63.161)

Subpart J
Violations

- Violations (63.171)
- Criminal penalties (63.172)

Subpart K
Preclosure Public Health and Environmental Standards

- Implements Environmental Protection Agency Standards (essentially verbatim) 63.201 – 63.204
  - no member of the public more than .15 mSv (15 mrem) annual dose during preclosure (63.204)

Subpart L

Postclosure Public Health and Environmental Standards

- Implements EPA Standards (essentially verbatim with important additions) 63.301 – 63.343
  - individual protection standard: .15 mSv (15 mrem) annual dose to RMEI from undisturbed system (63.311)
  - individual protection standard for human intrusion (63.321)
  - protection of drinking water (63.331)

Additions:

- Characteristics of the reference biosphere
  - biosphere consistent with arid or semi-arid conditions
- Reasonably Maximally Exposed Individual (RMEI) is an adult
- RMEI uses well water with average concentrations of radionuclides based on annual water demand of 3,700,500 m^3 (3,000 acre-ft)

Subpart L (cont.)

Additions (cont.)

- Human intrusion
  - no particulate waste material falls into borehole (i.e., only waste material transported by water is to be considered)

- Unlikely Features, Events and Processes (FEPs), currently defined as having less than 1 chance in 10 and at least 1 chance in 10,000 of occurring within 10,000 years of disposal