ENCLOSURE 4 TO SBK-L-05103

Offsite Dose Calculation Manual
Revision 28

RMD Controlled Copy _____

PROGRAM MANUAL

FOR INFORMATION ONLY

Offsite Dose Calculation Manual

SORC Review: 04-047 Date: 9/29/04

Effective Date: 10-07-04

FOR INFORMATION ONLY

ODCM
Rev. 28

Manual Owner:
D. A. Robinson

ABSTRACT

The Offsite Dose Calculation Manual (ODCM) contains details to implement the requirements of Technical Specifications 6.7.6g and 6.7.6h.

The Offsite Dose Calculation Manual (ODCM) is divided into two parts: (1) the Radioactive Effluent Controls Program for both in-plant radiological effluent monitoring of liquids and gases, along with the Radiological Environmental Monitoring Program (REMP) (Part A); and (2) approved methods to determine effluent monitor setpoint values and estimates of doses and radionuclide concentrations occurring beyond the boundaries of Seabrook Station resulting from normal Station operation (Part B).

The sampling and analysis requirements of the Radioactive Effluent Controls Program, specified in Part A, provide the inputs for the models of Part B in order to calculate offsite doses and radionuclide concentrations necessary to determine compliance with the dose and concentration requirements of the Station Technical Specification 6.7.6g. The REMP required by Technical Specification 6.7.6h, and as specified within this manual, provides the means to determine that measurable concentrations of radioactive materials released as a result of the operation of Seabrook Station are not significantly higher than expected.

OFFSITE DOSE CALCULATION MANUAL
(ODCM)

TABLE OF CONTENTS

CONTENT		PAGE
PART A: RADIOLOGICAL EFFLUENT CONTROL AND ENVIRONMENTAL MONITORING PROGRAMS		
1.0	INTRODUCTION	A.1-1
2.0	RESPONSIBILITIES (PART A)	A.2-1
3.0	DEFINITIONS	A.3-1
4.0	CONTROL AND APPLICABILITY	A.4-1
5.0	RADIOACTIVE EFFLUENT MONITORING INSTRUMENTATION	A.5-1
5.1	Liquids	A.5-1
5.2	Radioactive Gaseous Effluent Monitoring Instrumentation	A.5-11
6.0	RADIOACTIVE LIQUID EFFLUENTS	A.6-1
6.1	Concentration	A.6-1
6.2	Dose	A.6-9
6.3	Liquid Radwaste Treatment System	A.6-11
7.0	RADIOACTIVE GASEOUS EFFLUENTS	A.7-1
7.1	Dose Rate	A.7-1
7.2	Dose - Noble Gases	A.7-7
7.3	Dose - Iodine-131, Iodine-133, Tritium, and Radioactive Material in Particulate Form	A.7-9
7.4	Gaseous Radwaste Treatment System	A.7-11
8.0	TOTAL DOSE	A.8-1
9.0	RADIOLOGICAL ENVIRONMENTAL MONITORING	A.9-1
9.1	Monitoring Program	A.9-1
9.2	Land Use Census	A.9-11

CONTENT PAGE

9.3 Interlaboratory Comparison Program A.9-13

10.0 REPORTS A.10-1

10.1 Annual Radiological Environmental Operating Report A.10-1

10.2 Annual Radioactive Effluent Release Report A.10-2

PART B: RADIOLOGICAL CALCULATIONAL METHODS AND PARAMETERS

1.0 INTRODUCTION B.1-1

1.1 Responsibilities for Part B B.1-1

1.2 Summary of Methods, Dose Factors, Limits, Constants, Variables and Definitions B.1-2

2.0 METHOD TO CALCULATE OFF-SITE LIQUID CONCENTRATIONS B.2-1

2.1 Method to Determine F_1^{ENG} and C_1^{NG} B.2-1

2.2 Method to Determine Radionuclide Concentration for Each Liquid Effluent Source B.2-2

2.2.1 Waste Test Tanks B.2-2
2.2.2 Turbine Building Sump B.2-3
2.2.3 Steam Generator Blowdown Flash Tank B.2-3
2.2.4 Primary Component Cooling Water (PCCW) System B.2-3
2.2.5 Water Treatment System (Condensate Polishing System) B.2-3

3.0 OFF-SITE DOSE CALCULATION METHODS B.3-1

3.1 Introductory Concepts B.3-2

3.2 Method to Calculate the Total Body Dose from Liquid Releases B.3-4

3.2.1 Method I B.3-4
3.2.2 Method II B.3-5

3.3 Method to Calculate Maximum Organ Dose from Liquid Releases B.3-6

3.3.1 Method I B.3-6
3.3.2 Method II B.3-7

3.4 Method to Calculate the Total Body Dose Rate from Noble Gases B.3-8

3.4.1 Method I B.3-8
3.4.2 Method II B.3-10

CONTENT		PAGE
3.5	Method to Calculate the Skin Dose Rate from Noble Gases	B.3-11
3.5.1	Method I	B.3-11
3.5.2	Method II	B.3-14
3.6	Method to Calculate the Critical Organ Dose Rate from Iodines, Tritium and Particulates with $T_{1/2}$ Greater than 8 Days	B.3-15
3.6.1	Method I	B.3-15
3.6.2	Method II	B.3-18
3.7	Method to Calculate the Gamma Air Dose from Noble Gases	B.3-19
3.7.1	Method I	B.3-19
3.7.2	Method II	B.3-21
3.8	Method to Calculate the Beta Air Dose from Noble Gases	B.3-22
3.8.1	Method I	B.3-22
3.8.2	Method II	B.3-24
3.9	Method to Calculate the Critical Organ Dose from Iodines, Tritium and Particulates	B.3-25
3.9.1	Method I	B.3-25
3.9.2	Method II	B.3-27
3.10	Method to Calculate Direct Dose from Plant Operation	B.3-28
3.10.1	Method	B.3-28
3.11	Dose Projections	B.3-29
3.11.1	Liquid Dose Projections	B.3-29
3.11.2	Gaseous Dose Projections	B.3-30
3.12	Method to Calculate Total Dose from Plant Operations	B.3-34
3.12.1	Method	B.3-34
4.0	RADIOLOGICAL ENVIRONMENTAL MONITORING PROGRAM	B.4-1
5.0	SETPOINT DETERMINATIONS	B.5-1
5.1	Liquid Effluent Instrumentation Setpoints	B.5-1
5.1.1	Liquid Waste Test Tank Monitor (RM-6509)	B.5-1

CONTENT PAGE

5.1.1.1 Method to Determine the Setpoint of the Liquid Waste Test Tank Monitor (RM-6509) B.5-1

5.1.1.2 Liquid Waste Test Tank Monitor Setpoint Example B.5-5

5.1.2 Turbine Building Drains Liquid Effluent Monitor (RM-6521) B.5-6
5.1.3 Steam Generator Blowdown Liquid Sample Monitor (RM-6519) B.5-7
5.1.4 PCCW Head Tank Rate-of-Change Alarm Setpoint B.5-8
5.1.5 PCCW Radiation Monitor B.5-9
5.1.6 Water Treatment Liquid Effluent (CPS Rad Monitor RM-6473) B.5-9

5.2 Gaseous Effluent Instrumentation Setpoints B.5-10

5.2.1 Plant Vent Wide-Range Gas Monitors (RM-6528-1, 2 and 3) B.5-10

5.2.1.1 Method to Determine the Setpoint of the Plant Vent Wide Range Gas Monitors (RM-6528-1, 2 and 3) B.5-10

5.2.1.2 Plant Vent Wide Range Gas Monitor Setpoint Example for Limiting Case B.5-12

5.2.2 Waste Gas System Monitors (RM-6504 and RM-6503) B.5-15
5.2.3 Main Condenser Air Evacuation Monitor (RM-6505) B.5-15

6.0 LIQUID AND GASEOUS EFFLUENT STREAMS, RADIATION MONITORS AND RADWASTE TREATMENT SYSTEMS B.6-1

7.0 BASES FOR DOSE CALCULATION METHODS B.7-1

7.1 Liquid Release Dose Calculations B.7-1

7.1.1 Dose to the Total Body B.7-4
7.1.2 Dose to the Critical Organ B.7-4

7.2 Gaseous Release Dose Calculations B.7-7

7.2.1 Total Body Dose Rate from Noble Gases B.7-7
7.2.2 Skin Dose Rate from Noble Gases B.7-8
7.2.3 Critical Organ Dose Rate from Iodines, Tritium and Particulates with Half-Lives Greater Than Eight Days B.7-11
7.2.4 Gamma Dose to Air from Noble Gases B.7-13
7.2.5 Beta Dose to Air from Noble Gases B.7-14
7.2.6 Dose to Critical Organ from Iodines, Tritium and Particulates with Half-Lives Greater Than Eight Days B.7-16
7.2.7 Special Receptor Gaseous Release Dose Calculations B.7-18

7.2.7.1 Total Body Dose Rate from Noble Gases B.7-18

7.2.7.2 Skin Dose Rate from Noble Gases B.7-20

CONTENT PAGE

7.2.7.3 Critical Organ Dose Rate from Iodines, Tritium and Particulates with Half-Lives Greater Than Eight Days B.7-21

7.2.7.4 Gamma Dose to Air from Noble Gases B.7-22

7.2.7.5 Beta Dose to Air from Noble Gases B.7-23

7.2.7.6 Critical Organ Dose from Iodines, Tritium and Particulates with Half-Lives Greater Than Eight Days B.7-25

7.3 Receptor Points and Average Atmospheric Dispersion Factors for Important Exposure Pathways B.7-30

7.3.1 Receptor Locations B.7-30
7.3.2 Seabrook Station Atmospheric Dispersion Model B.7-30
7.3.3 Average Atmospheric Dispersion Factors for Receptors B.7-31

8.0 BASES FOR LIQUID AND GASEOUS MONITOR SETPOINTS B.8-1

8.1 Basis for the Liquid Waste Test Tank Monitor Setpoint B.8-1

8.2 Basis for the Plant Vent Wide Range Gas Monitor Setpoints B.8-5

8.3 Basis for PCCW Head Tank Rate-of-Change Alarm Setpoint B.8-10

8.4 Basis for Waste Gas Processing System Monitors (RM-6504 and RM-6503) B.8-11

8.5 Basis for the Main Condenser Air Evacuation Monitor Setpoint (RM-6505) B.8-13

8.5.1 Limiting Example for the Air Evacuation Monitor Setpoint During Normal Operations B.8-13

8.5.2 Example for the Air Evacuation Monitor Setpoint During Start Up (Hogging Mode) B.8-15

References R-1

Appendix A: Dose Conversion Factors A-1

Appendix B: Annual Average Effluent Concentration Limits Taken From 10 CFR 20, Appendix B B-1

Appendix C: EMS Software Documentation C-1

LIST OF TABLES AND FIGURES

PART A TABLES

A.5.1-1	Radioactive Liquid Effluent Monitoring Instrumentation	A.5-5
A.5.1-2	Radioactive Liquid Effluent Monitoring Instrumentation Surveillance Requirements	A.5-8
A.5.2-1	Radioactive Gaseous Effluent Monitoring Instrumentation	A.5-16
A.5.2-2	Radioactive Gaseous Effluent Monitoring Instrumentation Surveillance Requirements	A.5-18
A.6.1-1	Radioactive Liquid Waste Sampling and Analysis Program	A.6-3
A.7.1-1	Radioactive Gaseous Waste Sampling and Analysis Program	A.7-3
A.9.1-1	Radiological Environmental Monitoring Program	A.9-3
A.9.1-2	Detection Capabilities for Environmental Sample Analysis	A.9-7
A.9.1-3	Reporting Levels for Radioactivity Concentrations in Environmental Samples	A.9-10

PART B TABLES

B.1-1	Summary of Radiological Effluent Part A Controls and Implementing Equations	B.1-3
B.1-2	Summary of Method I Equations to Calculate Unrestricted Area Liquid Concentrations	B.1-6
B.1-3	Summary of Method I Equations to Calculate Off-Site Doses from Liquid Releases	B.1-7
B.1-4	Summary of Method I Equations to Calculate Dose Rates	B.1-8
B.1-5	Summary of Method I Equations to Calculate Doses to Air from Noble Gases	B.1-11
B.1-6	Summary of Method I Equations to Calculate Dose to an Individual from Tritium, Iodine and Particulates	B.1-13
B.1-7	Summary of Methods for Setpoint Determinations	B.1-14
B.1-8	Summary of Variables	B.1-15
B.1-9	Definition of Terms	B.1-22

CONTENT		PAGE
B.1-10	Dose Factors Specific for Seabrook Station for Noble Gas Releases	B.1-23
B.1-11	Dose Factors Specific for Seabrook Station for Liquid Releases	B.1-24
B.1-12	Dose and Dose Rate Factors Specific for Seabrook Station for Iodines, Tritium and Particulate Releases	B.1-25
B.1-13	Combined Skin Dose Rate Factors Specific for Seabrook Station Special Receptors for Noble Gas Release	B.1-26
B.1-14	Dose and Dose Rate Factors Specific for the Science and Nature Center for Iodine, Tritium, and Particulate Releases	B.1-27
B.1-15	Dose and Dose Rate Factors Specific for the "Rocks" for Iodine, Tritium, and Particulate Releases	B.1-28
B.4-1	Radiological Environmental Monitoring Stations	B.4-2
B.7-1	Usage Factors for Various Liquid Pathways at Seabrook Station	B.7-6
B.7-2	Environmental Parameters for Gaseous Effluents at Seabrook Station	B.7-27
B.7-3	Usage Factors for Various Gaseous Pathways at Seabrook Station	B.7-29
B.7-4	Seabrook Station Long-Term Average Dispersion Factors* Primary Vent Stack	B.7-33
B.7-5	Seabrook Station Long-Term Average Dispersion Factors for Special (On-Site) Receptors Primary Vent Stack	B.7-34
B.7-6	Seabrook Station Long-Term Atmospheric Diffusion and Deposition Factors Ground-Level Release Pathway	B.7-35
	PART B FIGURES	
B.4-1	Radiological Environmental Monitoring Locations within 4 Kilometers of Seabrook Station	B.4-6
B.4-2	Radiological Environmental Monitoring Locations Between 4 Kilometers and 12 Kilometers from Seabrook Station	B.4-7
B.4-3	Radiological Environmental Monitoring Locations Outside 12 Kilometers of Seabrook Station	B.4-8
B.4-4	Direct Radiation Monitoring Locations within 4 Kilometers of Seabrook Station	B.4-9
B.4-5	Direct Radiation Monitoring Locations Between 4 Kilometers and 12 Kilometers from Seabrook Station	B.4-10

CONTENT		PAGE
B.4-6	Direct Radiation Monitoring Locations Outside 12 Kilometers of Seabrook Station	B.4-11
B.6-1	Liquid Effluent Streams, Radiation Monitors, and Radwaste Treatment System at Seabrook Station	B.6-2
B.6-2	Gaseous Effluent Streams, Radiation Monitors, and Radwaste Treatment System at Seabrook Station	B.6-3

LIST OF EFFECTIVE PAGES

PAGE	REV.	PAGE	REV.	PAGE	REV.
Cover	28	B.8-1 thru B.8-18	28		
Abstract	24	R-1	21		
TOC 1 - 8	28	A-1 thur A-15	21		
LOEP 1	28	B-1 thru B-52	25		
A.1-1	28				
		C-1	22		
A.2-1	24	C-2	22		
		C-3	16		
A.3-1	24	C-4	16		
		C-5	16		
A.4-1 thru A.4-4	25	C-6	22		
A.5-1 thru A.5-19	28				
A.6-1 thru A.6-12	28				
A.7-1 thru A.7-12	25				
A.8-1	24				
A.8-2	24				
A.9-1 thru A.9-13	28				
A.10-1	24				
A.10-2	24				
A.10-3	24				
B.1-0 thru B.1-28	28				
B.2-1 thru B.2-3	28				
B.3-1 thru B.3-34	25				
B.4-1 thru B.4-11	28				
B.5-1 thru B.5-18	28				
B.6-1 thru B.6-3	28				
B.7-1 thru B.7-35	24				

PART A

RADIOLOGICAL EFFLUENT CONTROL AND ENVIRONMENTAL MONITORING PROGRAMS

1.0 INTRODUCTION

The Offsite Dose Calculation Manual (ODCM) contains details to implement the Radioactive Effluent Controls and Environmental Monitoring Programs" of Technical Specifications 6.7.6g and 6.7.6h.

The purpose of this manual is to contain details for the implementation of the Radioactive Effluent Technical Requirement Program (RETRP) and the Radiological Environmental Monitoring Program (REMP). These programs are required by Technical Specifications 6.7.6g and 6.7.6h.

Part A of this manual defines specific concentrations, sampling regimes and frequencies for both the RETRP and the REMP. These activities are the defined surveillances for radiological releases. Part A also defines specific sampling locations for the RETRP. The information contained in Part A is used as input into the models that are used in Part B. The Part B models identify the calculational methods for determining radiation monitor setpoints, offsite doses and effluent concentrations of radionuclides. Part B also defines sampling locations for the REMP. The data resulting from the surveillance and monitoring programs described in Part A provide a means to confirm that concentrations of radioactive material released, as a result of routine Seabrook Station operations, do not contribute to effluent dose significantly different than as postulated in Part B.

The ODCM Parts A and B containing guidance for handling (sampling and monitoring) Condensate Polisher System Effluent discharges (Neutralization Tank, Low Conductivity Tank, and Resin Megarinses) do not apply until the Polisher is declared operable and processing of Condensate through the demineralizer resin occurs.

2.0 RESPONSIBILITIES (PART A)

All changes to the ODCM shall be reviewed by the Station Operation Review Committee (SORC), approved by the Station Director, and documented per Administrative Control 6.13 of the Technical Specifications. The change process is controlled by the Applicability Determination Process as controlled by the 10 CFR 50.59 Resource Manual (5059RM). Changes made to Part A shall be submitted to the NRC for its information in the Annual Radioactive Effluent Release Report for the period in which the change(s) was made effective, pursuant to T.S. 6.13.

It shall be the responsibility of the Station Director to ensure that the ODCM is used in the performance of the Radioactive Effluent Control and Environmental Monitoring Program implementation requirements, as identified under Administrative Controls 6.7.6g and 6.7.6h of the Technical Specifications.

3.0 DEFINITIONS

The defined terms of this section appear in capitalized type and are applicable throughout these Controls. Terms used in these Controls and not defined herein have the same definition as listed in the Technical Specifications.

4.0 CONTROL AND APPLICABILITY

This section provides a summary listing of the Controls and Applicability requirements of the ODCM.

The RECP conforms with 10 CFR 50.36a for the control of radioactive effluents and for maintaining the doses to MEMBERS OF THE PUBLIC from radioactive effluents as low as reasonably achievable. The REMP provides for monitoring the radiation and radionuclides in the environs of the plant.

The specific implementation details for the RECP and REMP are located in the OFFSITE DOSE CALCULATION MANUAL (ODCM). Contained within the ODCM are the following CONTROLS:

C.5.1 - RADIOACTIVE EFFLUENT MONITORING INSTRUMENTATION – LIQUIDS

CONTROL - At All Times

The radioactive liquid effluent monitoring instrumentation channels shown in Table A.5.1-1 shall be OPERABLE with their Alarm/Trip Setpoints set to ensure that the limits of Control C.6.1.1 are not exceeded. The Alarm/Trip Setpoints of these channels shall be determined and adjusted in accordance with the methodology and parameters in the OFFSITE DOSE CALCULATION MANUAL (ODCM), Part B.

C.5.2 - RADIOACTIVE GASEOUS EFFLUENT MONITORING INSTRUMENTATION

CONTROL- As Shown on ODCM Table A.5.2-1

The radioactive gaseous effluent monitoring instrumentation channels shown in Table A.5.2-1 shall be OPERABLE with their Alarm/Trip Setpoints set to ensure that the limits of Control C.7.1.1 are not exceeded. The Alarm/Trip Setpoints of these channels meeting Control C.7.1.1 shall be determined and adjusted in accordance with the methodology and parameters in the ODCM (Part B).

C.6.1.1 - RADIOACTIVE LIQUID EFFLUENTS – CONCENTRATION

CONTROL - At All Times

The concentration of radioactive material released in liquid effluents at the point of discharge from the multiport diffuser (see Technical Specifications Figure 5.1-3) shall be limited to the concentrations specified in 10 CFR Part 20, Appendix B, Table 2, Column 2, for radionuclides other than dissolved or entrained noble gases. For dissolved or entrained noble gases, the concentration shall be limited to 2×10^{-4} microCurie/ml total activity.

C.6.2.1 – DOSE

CONTROL – At All Times

The dose or dose commitment to a MEMBER OF THE PUBLIC from radioactive materials in liquid effluents released, from each unit, to UNRESTRICTED AREAS (see Technical Specification Figure 5.1-3) shall be limited

- During any calendar quarter to less than or equal to 1.5 mrems to the whole body and to less than or equal to 5 mrems to any organ, and
- During any calendar year to less than or equal to 3 mrems to the whole body and to less than or equal to 10 mrems to any organ.

C.6.3.1 – LIQUID RADWASTE TREATMENT SYSTEM

CONTROL – At All Times

The Liquid Radwaste Treatment System shall be OPERABLE and appropriate portions of the system shall be used to reduce releases of radioactivity when the projected doses due to the liquid effluent to UNRESTRICTED AREAS (see Technical Specification Figure 5.1-3) would exceed 0.06 mrem to the whole body or 0.2 mrem to any organ in a 31-day period.

C.7.1.1 – RADIOACTIVE GASEOUS EFFLUENTS – DOSE RATE

CONTROL - At All Times

The dose rate due to radioactive materials released in gaseous effluents from the site to areas at and beyond the SITE BOUNDARY (see Technical Specification Figure 5.1-1) shall be limited to the following:

- For noble gases: Less than or equal to 500 mrems/yr to the whole body and less than or equal to 3000 mrems/yr to the skin, and
- For Iodine-131, for Iodine-133, for tritium, and for all radionuclides in particulate form with half-lives greater than 8 days: Less than or equal to 1500 mrems/yr to any organ.

C.7.2.1 – DOSE – NOBLE GASES

CONTROL - At All Times

The air dose due to noble gases released in gaseous effluents to areas at and beyond the SITE BOUNDARY (see Technical Specification Figure 5.1-1) shall be limited to the following:

- During any calendar quarter: Less than or equal to 5 mrads for gamma radiation and less than or equal to 10 mrads for beta radiation, and
- During any calendar year: Less than or equal to 10 mrads for gamma radiation and less than or equal to 20 mrads for beta radiation.

C.7.3.1 – DOSE – IODINE-131, TRITIUM, AND RADIOACTIVE MATERIAL IN PARTICULATE FORM

CONTROL- At All Times

The dose to a MEMBER OF THE PUBLIC from Iodine-131, Iodine-133, tritium, and all radionuclides in particulate form with half-lives greater than 8 days in gaseous effluents released to areas at and beyond the SITE BOUNDARY (see Technical Specification Figure 5.1-1) shall be limited to the following:

- During any calendar quarter: Less than or equal to 7.5 mrems to any organ, and
- During any calendar year: Less than or equal to 15 mrems to any organ.

C.7.4.1 - GASEOUS RADWASTE TREATMENT SYSTEM

CONTROL – At All Times

The VENTILATION EXHAUST TREATMENT SYSTEM and the GASEOUS RADWASTE TREATMENT SYSTEM shall be OPERABLE and appropriate portions of these system shall be used to reduce releases of radioactivity when the projected doses in 31 days due to gaseous effluent releases to areas at and beyond the SITE BOUNDARY (see Technical Specification Figure 5.1-1) would exceed

- 0.2 mrad to air from gamma radiation, or
- 0.4 mrad to air from beta radiation, or
- 0.3 mrem to any organ of a MEMBER OF THE PUBLIC.

C.8.1.1 - TOTAL DOSE

CONTROL- At All Times

The annual (calendar year) dose or dose commitment to any MEMBER OF THE PUBLIC due to releases of radioactivity and to radiation from uranium fuel cycle sources shall be limited to less than or equal to 25 mrems to the whole body or any organ, except the thyroid, which shall be limited to less than or equal to 75 mrems.

C.9.1.1 - RADIOLOGICAL ENVIRONMENTAL MONITORING – MONITORING PROGRAM

CONTROL – At All Times

The Radiological Environmental Monitoring Program (REMP) shall be conducted as specified in Table A.9.1-1.

C.9.2.1 – LAND USE CENSUS

CONTROL - At All Times

A Land Use Census shall be conducted and shall identify within a distance of 8 km (5 miles) the location in each of the 16 meteorological sectors of the nearest milk animal, the nearest residence, and the nearest garden** of greater than 50 m^2 (500 ft^2) producing broad leaf vegetation.

C.9.3.1 – INTERLABORATORY COMPARISON PROGRAM

CONTROL - At All Times

In accordance with Technical Specification 6.7.6.h.3, analyses shall be performed on all radioactive materials supplied as part of an Interlaboratory Comparison Program, that has been approved by the Commission, that correspond to samples required by REMP.

**Broad leaf vegetation sampling of at least three different kinds of vegetation may be performed at the SITE BOUNDARY in each of two different direction sectors with the highest predicted relative deposition values (D/Qs) in lieu of the garden census. Specifications for broad leaf vegetation sampling in the REMP shall be followed, including analysis of control samples.

5.0 RADIOACTIVE EFFLUENT MONITORING INSTRUMENTATION

5.1 Liquids

CONTROLS

C.5.1 The radioactive liquid effluent monitoring instrumentation channels shown in Table A.5.1-1 shall be OPERABLE with their Alarm/Trip Setpoints set to ensure that the limits of Control C.6.1.1 are not exceeded. The Alarm/Trip Setpoints of these channels shall be determined and adjusted in accordance with the methodology and parameters in the OFFSITE DOSE CALCULATION MANUAL (ODCM), Part B.

APPLICABILITY: At all times.

ACTION:

a. With a radioactive liquid effluent monitoring instrumentation channel Alarm/Trip Setpoint less conservative than required by the above specification, immediately suspend the release of radioactive liquid effluents monitored by the affected channel, or declare the channel inoperable.

b. With less than the minimum number of radioactive liquid effluent monitoring instrumentation channels OPERABLE, take the ACTION shown in Table A.5.1-1. Restore the inoperable instrumentation to OPERABLE status within 30 days and, if unsuccessful, explain in the next Annual Radioactive Effluent Release Report pursuant to Technical Specification 6.8.1.4 and Part A, Section 10.2, of the ODCM, why this inoperability was not corrected in a timely manner.

SURVEILLANCE REQUIREMENTS

S.5.1 Each radioactive liquid effluent monitoring instrumentation channel shall be demonstrated OPERABLE by performance of the CHANNEL CHECK, SOURCE CHECK, CHANNEL CALIBRATION, and CHANNEL OPERATIONAL TEST at the frequencies shown in Table A.5.1-2.

BASES

The radioactive liquid effluent instrumentation is provided to monitor and control, as applicable, the releases of radioactive materials in liquid effluents during actual or potential releases of liquid effluents. The Alarm/Trip Setpoints for these instruments shall be calculated and adjusted in accordance with the methodology and parameters in the ODCM to ensure that the alarm/trip will occur prior to exceeding the limits of 10 CFR Part 20. The OPERABILITY and use of this instrumentation is consistent with the requirements of General Design Criteria 60, 63, and 64 of Appendix A to 10 CFR Part 50.

Table A.5.1-2 Item 3a of Control C.5.1 requires that a Channel Operational Test be performed on the radioactivity monitors (RM-R-6515 and RM-R-6516) for the PCCW System. This channel operational test is a digital channel operational test and requires that it shall demonstrate automatic isolation of the pathway and control room alarm annunciation.

For Seabrook Station, these two radioactivity monitoring channels provide control room annunciation, but do not provide automatic isolation of the release pathway. This particular item was discussed in detail with the NRC staff reviewers. For this particular reason, the words "But Not Termination of Release" were added to Item 3 of Table A.5.1-2. The purpose of adding the above words to Item 3 was to preclude the addition of another Table Notation to Table A.5.1-2. Therefore, the channel operational test for these monitors only requires that they provide control room alarm annunciation.

The CHANNEL CHECK for Flow Rate Measurement Devices (Table A.5.1-2, items 2.a., 2.b. and 2.d.) is required "at least once per 24 hours on **days when continuous, periodic, or batch releases are made.**" Additionally, ACTION 31 of Table A.5.1-1 is only applicable during actual releases.

Based on the above requirements, these instruments are only required to be OPERABLE during actual releases. Therefore, the CHANNEL CHECK is only required during periods when continuous, periodic, or batch releases are being made.

The Primary Component Cooling Water (PCCW) System is monitored by radiation monitors, which are required by Technical Specifications 3.3.3.1 and ODCM C.5.1 to be OPERABLE, or sampling of the PCCW and Service Water (SW) Systems is required. Clarification of this requirement needs to be made for certain PCCW System conditions. Below is a list of 3 conditions and their corresponding requirements.

1) If the PCCW System is shut down but not drained, grab samples shall be taken of PCCW and SW, as required in Technical Specification Table 3.3-6, Items 6a and 6b (Action 28).

2) During transition times when the PCCW system is in the process of being drained, grab samples, as required by Technical Specification Table 3.3-6 and ODCM C.5.1, shall be taken until such time as sampling of PCCW is no longer possible. At this time neither PCCW nor SW need to be sampled. During transition times when the PCCW system is being filled, the taking of grab samples shall commence as soon as physically possible and continue in accordance with the requirements of Technical Specifications 3.3.3.1 and ODCM C.5.1 until PCCW is in service, the pumps are operating, and monitors are operable.

3) When PCCW is drained, there are no sampling requirements.

The above statements are consistent with the Technical Specification definition of OPERABILITY and with the Bases for Technical Specification 3.3.3.1.

The following actions are required when the Service Water side of the Primary Component Cooling Water (PCCW) Heat Exchanger is drained and grab samples of the Service Water System are required:

a. Grab samples from the Service Water System will be obtained at the frequencies specified in Technical Specification 3.3.3.1 and ODCM C.5.1 as the Service Water System is being drained until obtaining these samples is not physically possible.

b. Grab samples are not required once the Service Water System is drained such that it is not physically possible to obtain the samples.

c. When refilling the Service Water System, grab samples shall resume as soon as physically possible, at the intervals specified in the aforementioned sources, and continue until the PCCW radiation monitors (1-RM-6515 and 1-RM-6516) are OPERABLE.

Sampling of the PCCW system with the Service Water system drained and the PCCW system in operation shall continue per the requirements of Technical Specification 3.3.3.1 and this Control.

The purpose of the plant radiation monitors is to sense radiation levels in selected plant systems and locations and determine whether or not predetermined limits are being exceeded. In the case of the Primary Component Cooling Water (PCCW) loops, the radiation monitors (1-RM-6515 and 1-RM-6516) sense radiation in the PCCW system which could leak into the Service Water System and be discharged to the environment via the multiport diffuser. Per Control C.6.1.1, the concentration of radioactive material released in liquid effluents at the point of discharge from the multiport diffuser must be within specified limits. This limitation provides assurance that the levels of radioactive materials in unrestricted areas will not pose a threat to the health and safety of the public.

Based on the importance of maintaining radioactive effluent releases within limits that guarantee the health and safety of the public will not be at risk, the PCCW radiation monitors are required to be in operation at all times. When a radiation monitor is inoperable, grab samples from the PCCW and Service Water systems must be obtained and analyzed as a compensatory measure in accordance with Technical Specification 3.3.3.1, Table 3.3-6 Action 28 and this Control. If the service water system is drained, there is no potential for inadvertent radioactive liquid effluent release through the service water system to the environment via the multiport diffuser. Thus, when the system is drained there is no need to obtain the grab sample. However, when the system is being filled, grab samples must be obtained as soon as possible to ensure that the water discharged to the environment is in compliance with Control C.6.1.1.

The purpose of the PCCW monitors is to detect radioactivity indicative of a leak from the Reactor Coolant System or from one of the other radioactive systems which exchange with the PCCW System. These monitors are required to be operable at all times. Grab samples of PCCW are required when the PCCW monitors are not operable. Since the purpose of obtaining the PCCW samples is to provide an indication of a leak of radioactive liquid into the PCCW system, draining of the Service Water system does not remove the reason for obtaining the PCCW grab samples. These samples shall be obtained as specified in Technical Specification 3.3.3.1 and this Control. This determination is consistent with the Bases for Technical Specification 3.3.3.1.

The temporary lowering of an RDMS channel setpoint, by RDMS data base manipulation to verify alarm/trip functions, does not prevent the channel from continuously monitoring radiation levels (except WRGM). Additionally, when the setpoint is lowered below background radiation levels the associated trip functions will actuate equipment in their required operating mode as if a high radiation condition exists. The channel remains OPERABLE because monitoring and associated trip functions are not inhibited. Refer to TS-142 for further details.

When the SGBD demineralizers are being rinsed to the ocean using SGBD water, the SGBD flash tank radiation monitor (RM-6519) may become inoperable in this alignment from decreased backpressure to run the monitor sample pump. If this happens, the sampling requirements of Table A.5.1-1 ACTION 30 must be performed.

RM-6509, although in the flowpath of the SGBD demineralizer rinse, cannot perform the function of RM-6519 because it cannot achieve the same sensitivity to radiation. However, RM-6509 shall have its setpoints established per plant procedures since the discharge flow path is through the SGBD demineralizers (where a potential to acquire radioactivity exists), but after RM-6519.

If RM-6509 is inoperable, then in addition to the periodic sampling requirements of Table A.5.1-1 ACTION 30 for RM-6519, the batch sample and lineup verification of ACTION 29 would also have to be complied with, for RM-6509.

It should be noted that, during a SGBD demineralizer rinse to the discharge transition structure with SB liquid, SB-FE-1918 is not in the flow path. It is acceptable to use a flow monitoring device in the final flow path (such as WL-FIT-1458) so that Table A.5.1-1 ACTION 31 does **NOT** have to be entered.

The Note which corresponds to Table A.5.1-1 "**" states that pump performance curves generated in place "should" be used to estimate flow. Hence, there is no requirement to use the pump curves as described in these tables.

TABLE A.5.1-1

RADIOACTIVE LIQUID EFFLUENT MONITORING INSTRUMENTATION

INSTRUMENT	MINIMUM CHANNELS OPERABLE	ACTION
1. Radioactivity Monitors Providing Alarm and Automatic Termination of Release		
a. Liquid Radwaste Test Tank Discharge	1	29
b. Steam Generator Blowdown Flash Tank Drain	1*	30
c. Turbine Building Sump Effluent Line	1	30
d. Water Treatment Liquid Effluent Discharge	1	29
2. Flow Rate Measurement Devices		
a. Liquid Radwaste Test Tank Discharge	1	31
b. Steam Generator Blowdown Flash Tank Drain	1*	31
c. Circulating Water Discharge	1**	N.A.
d. Water Treatment Liquid Effluent Discharge	1	31

*Only applicable when steam generator blowdown is directed to the discharge transition structure without intermediate collection. The required radiation monitoring channel is RM-6519. The flow path must include a flow indicator which can be used to provide total flow discharged during period of interest.
**Pump performance curves generated in place should be used to estimate flow.

TABLE A.5.1-1

RADIOACTIVE LIQUID EFFLUENT MONITORING INSTRUMENTATION
(Continued)

INSTRUMENT	MINIMUM CHANNELS OPERABLE	ACTION
3. Radioactivity Monitors Providing Alarm but Not Termination of Release		
a. Primary Component Cooling Water System (in lieu of service water monitors)	1	32
4. Rate of Change Monitor		
a. Primary Component Cooling Water System Head Tank (in lieu of service water monitors)	1	33

TABLE A.5.1-1

(Continued)

ACTION STATEMENTS

ACTION 29 - With the number of channels OPERABLE less than the Minimum Channels OPERABLE requirement, effluent releases via this pathway may continue provided that prior to initiating a release

a. At least two independent samples are analyzed in accordance with Surveillance S.6.1.1, and

b. At least two technically qualified members of the station staff independently verify the release rate calculations and discharge line valving.

Otherwise, suspend release of radioactive effluents via this pathway.

ACTION 30 - With the number of channels OPERABLE less than the Minimum Channels OPERABLE requirement, effluent releases via this pathway may continue provided grab samples are analyzed for radioactivity at a lower limit of detection of no more than 10^{-7} microCurie/ml

a. At least once per 12 hours when the specific activity of the secondary coolant is greater than 0.01 microCurie/gram DOSE EQUIVALENT I-131, or

b. At least once per 24 hours when the specific activity of the secondary coolant is less than or equal to 0.01 microCurie/gram DOSE EQUIVALENT I-131.

ACTION 31 - With the number of channels OPERABLE less than the Minimum Channels OPERABLE requirement, effluent releases via this pathway may continue provided the flow rate is estimated at least once per 4 hours during actual releases. Pump performance curves generated in place may be used to estimate flow.

ACTION 32 - With the number of channels OPERABLE less than required by the Minimum Channels OPERABLE requirement, collect grab samples daily from the Primary Component Cooling Water System and the Service Water System and analyze the radioactivity until the inoperable channel(s) is restored to OPERABLE status.

ACTION 33 - With the number of channels OPERABLE less than required by the Minimum Channels OPERABLE requirement, effluent releases via this pathway may continue provided the radioactivity level is determined at least once per 12 hours during actual releases.

TABLE A.5.1-2

RADIOACTIVE LIQUID EFFLUENT MONITORING INSTRUMENTATION SURVEILLANCE REQUIREMENTS

INSTRUMENT	CHANNEL CHECK	SOURCE CHECK	CHANNEL CALIBRATION	CHANNEL OPERATIONAL TEST
1. Radioactivity Monitors Providing Alarm and Automatic Termination of Release				
a. Liquid Radwaste Test Tank Discharge	D	P	R(2)	P(1)
b. Steam Generator Blowdown Flash Tank Drain	D	M	R(2)	Q(1)
c. Turbine Building Sumps Effluent Line	D	M	R(2)	Q(1)
d. Water Treatment Liquid Effluent Discharge	D	P	R(2)	P(1)
2. Flow Rate Measurement Devices				
a. Liquid Radwaste Test Tank Discharge*	D(3)	N.A.	R	N.A.
b. Steam Generator Blowdown Flash Tank Drain***	D(3)	N.A.	R	N.A.
c. Circulating Water Discharge	**	N.A.	N.A.	N.A.
d. Water Treatment Liquid Effluent Discharge	D(3)	N.A.	R	N.A.

*Isolation of the flow path is accomplished by the Waste Test Tank Discharge Pump Trip Circuitry.
**Pump curves may be used to estimate flow.
***Applies to the flow indicator used in the discharge path when steam generator blowdown is directed to the discharge transition structure without intermediate collection.

TABLE A.5.1-2

RADIOACTIVE LIQUID EFFLUENT MONITORING INSTRUMENTATION SURVEILLANCE REQUIREMENTS

(Continued)

INSTRUMENT	CHANNEL CHECK	SOURCE CHECK	CHANNEL CALIBRATION	CHANNEL OPERATIONAL TEST
3. Radioactivity Monitor Providing Alarm but Not Termination of Release				
a. Primary Component Cooling Water System (in lieu of service water monitors)	D	M	R(2)	Q(1)
4. Rate of Change Monitor				
a. Primary Component Cooling Water System (in lieu of service water monitors)	D(4)	N.A.	R	N.A

TABLE A.5.1-2
(Continued)

TABLE NOTATIONS

(1) The DIGITAL CHANNEL OPERATIONAL TEST shall also demonstrate that automatic isolation of this pathway and Control Room alarm annunciation occurs if the instrument indicates measured levels above the normal or Surveillance test Alarm/Trip Setpoint.

(2) The initial channel calibration for radioactivity measurement instrumentation shall include the use of a known (traceable to National Institute for Standards and Technology) liquid radioactive source positioned in a reproducible geometry with respect to the sensor. These standards shall permit calibrating the system over its normal operating range of energy and rate. For subsequent channel calibrations, sources that have been related to the initial calibration shall be used.

(3) CHANNEL CHECK shall consist of verifying indication of flow during periods of release. CHANNEL CHECK shall be made at least once per 24 hours on days on which continuous, periodic, or batch releases are made.

(4) CHANNEL CHECK shall consist of verifying indication of tank level during periods of release. CHANNEL CHECK shall be made at least once per 24 hours.

5.2 Radioactive Gaseous Effluent Monitoring Instrumentation

CONTROLS

C.5.2 The radioactive gaseous effluent monitoring instrumentation channels shown in Table A.5.2-1 shall be OPERABLE with their Alarm/Trip Setpoints set to ensure that the limits of Control C.7.1.1 are not exceeded. The Alarm/Trip Setpoints of these channels meeting Control C.7.1.1 shall be determined and adjusted in accordance with the methodology and parameters in the ODCM (Part B).

APPLICABILITY: As shown in Table A.5.2-1.

ACTION:

a. With a radioactive gaseous effluent monitoring instrumentation channel Alarm/Trip Setpoint less conservative than required by the above specification, immediately suspend the release of radioactive gaseous effluents monitored by the affected channel, or declare the channel inoperable.

b. With the number of OPERABLE radioactive gaseous effluent monitoring instrumentation channels less than the Minimum Channels OPERABLE, take the ACTION shown in Table A.5.2-1. Restore the inoperable instrumentation to OPERABLE status within 30 days or, if unsuccessful, explain in the next Annual Radioactive Effluent Release Report pursuant to Technical Specification 6.8.1.4 and Part A, Section 10.2, of the ODCM, why this inoperability was not corrected in a timely manner.

SURVEILLANCE REQUIREMENTS

S.5.2 Each radioactive gaseous effluent monitoring instrumentation channel shall be demonstrated OPERABLE by performance of the CHANNEL CHECK, SOURCE CHECK, CHANNEL CALIBRATION and CHANNEL OPERATIONAL TEST at the frequencies shown in Table A.5.2-2.

BASES

The radioactive gaseous effluent instrumentation is provided to monitor and control, as applicable, the releases of radioactive materials in gaseous effluents during actual or potential releases of gaseous effluents. The Alarm/Trip Setpoints for these instruments shall be calculated and adjusted in accordance with the methodology and parameters in the ODCM (Part B) to ensure that the alarm/trip will occur prior to exceeding the limits of 10 CFR Part 20. The OPERABILITY and use of this instrumentation is consistent with the requirements of General Design Criteria 60, 63, and 64 of Appendix A to 10 CFR Part 50. The sensitivity of any noble gas activity monitors used to show compliance with the gaseous effluent release requirements of Control C.7.2.1 shall be such that concentrations as low as 1×10^{-6} μCi/cc are measurable.

The main condenser air evacuation radiation monitor, RM-6505, is included with the Turbine Gland Seal Condenser Exhaust in Tables A.5.2-1 and A.5.2-2. Table A.5.2-1 defines the minimum channels operable and the required actions for the radioactive gaseous effluent monitoring instrumentation. Table A.5.2-2 lists the surveillance requirements for this instrumentation.

It is recommended that the out-of-service time for RM-6505 be tracked for reporting per C.5.2. (Reference ACR 96-197).

The Plant Vent Wide Range Gas Monitor (WRGM) design includes three ranges of noble gas monitors and two ranges of iodine and particulate sampling filters. The noble gas monitor, the equipment necessary to provide flow through three ranges of the noble gas monitors, and the iodine and particulate sample filters all affect the operability of the WRGM. The various combinations of out-of-service components are addressed in this clarification.

The WRGM noble gas activity monitor has three overlapping detector ranges: low, mid, and high.

UFSAR Table 12.3-15 lists the following ranges for the WRGM:

Low Range 10^{-7} - 10^{-1} μCi/cc
Mid Range 10^{-3} - 10^{3}
High Range 10^{-1} - 10^{5}

The minimum number of operable channels for the noble gas activity monitor, the flow rate monitors and the iodine sampler and particulate sampler is one, respectively.

The Controls do not list the specific WRGM noble gas activity monitor, the iodine/particulate sampler or the flow rate monitor channels separately by an instrumentation identification tag number.

Heat tracing of the sample lines, from the plant vent to the WRGM, is not listed as a specific requirement for WRGM operability. However, these circuits are necessary to ensure that the particulate and iodine concentration of the sample reaching the WRGM is representative of the effluent. The purpose of heat tracing is to ensure that the sample lines are free of moisture due to condensation. The low temperature alarm setpoint is variable based on outside ambient air temperature, and ensures that the sample line tubing metal temperature is high enough to prevent the moisture in the air from condensing inside of the sample line. The ability to detect of noble gases is not affected by the operational status of the heat tracing circuits.

The heat tracing on the sample lines within the PAB (CP 433, circuit 55) is not required for WRGM operation. (Engineering Evaluation, SS-EV-960017)

The following equipment normally defines an operational WRGM:

<u>During routine releases</u>,

-Sample flow through one of the particulate and iodine (P&I) filters F-156-1,2,3 and channel 1 (low range) noble gas (NG) detectors using pump P-240-2, and

-Sample flow through P&I filters F-156-7,8 using pump RM-P-391.

or in the event the noble gas activity is in the mid/high range,

-Sample flow through one of the particulate/iodine (P&I) filters F-156-4,5,6 and channels 2 or 3 (mid/high range) NG detectors using pump P-240-1, and

-Sample flow bypassing P&I filters F-156-7,8 using pump RM-P-391.

At all times,

-Heat tracing (HT) on the sample lines from the plant vent to the WRGM.

Note: Dewpoint measurements may be used if heat tracing is out of service. (See the following table)

-Vent stack flow rate monitor.

-WRGM sample flow rate for the channel(s) in service.

The table below lists the action required in the event that a WRGM component is out of service.

Out of Service Component	Action
Low range NG detector	Enter Action 33. Perform grab sampling as required.
High range NG detector	Enter Action 33. The actions required by Action 33 are satisfied provided the Low range NG detector provides continuous indication of the effluent concentrations, grab sampling not required. In the unlikely event that elevated effluent concentrations above the capability of the low range detector are present, then grab sampling or backup monitoring will/may be required.
Mid range NG detector	No action required, detection capability met by the overlapping ranges of the low and high NG detectors. (May need to ensure that the high range pump [RM-P-240-1] starts on increasing activity.)
RM-P-391	Enter Action 35. The mid and high range particulate and iodine sampling capability is lost. If a low range P&I filter F-156-1,2 or 3 is in service then no further action is required. If the low range P&I filters are out of service then comply with Action 35 within one hour.
P-240-1 (High range pump)	Enter Action 33 and 35. Action 33 is satisfied provided the low range NG detector provides continuous indication of the effluent concentrations, grab sampling is not required. Action 35 is satisfied if P-240-2 , and filters F-156-1,-2, or -3 are in service. If these P&I filters are out of service and the NG activity is in the low range, then ensure compliance with Action 35 within one hour of identifying the out of service condition. In the unlikely event that elevated effluent concentrations above the capability of the low range detector are present, then, with P-391 operating, install a portable sample pump across valves V28 and V29 to facilitate P&I grab sampling using filters F-156-4,-5, or -6, and noble gas sampling using the medium and high range detectors.
P-240-2 (Low range pump)	Enter Action 33 and 35. Action 33 is satisfied by performing grab samples. Action 35 is satisfied by ensuring the operation of P-391 with filters F-156-7 & 8 in service within one hour of identifying the out-of-service condition.

HT circuit: CP-434 Ckt 28. (Sample line temperature less than setpoint.)	Enter Action 36. Action 36 is satisfied and the WRGM may remain OPERABLE with CP-434 Ckt 28 out of service provided that CP-426 Ckt 46 is energized within 1 hr of the out-of-service condition.
Flow rate monitor and/or sampler flow rate monitor.	Comply with Action 32.

Action Statement 35 provides no guidance with regard to time required to initiate auxiliary sampling upon failure of a monitor. A finite time is required to take the appropriate actions to initiate auxiliary sampling. An interval of 60 minutes is a reasonable period of time in which to accomplish these actions provided that no activity occurs during this period which could result in an increase in radiation release levels.

Since the intent of Action 35 is to allow continued release of gaseous effluents provided an alternate means of continuous monitoring/collection capability is on-going during the release of radioactive gaseous effluents, the 60 minute time frame for auxiliary sampling to be established is still a reasonable period of time to complete the necessary manual actions to establish auxiliary sampling. If auxiliary sampling cannot be established within 60 minutes then the initial action of immediately suspending the release of radioactive gaseous effluents should be done, as specified in Action a. of C.5.2. It should be noted that for lack of specified criteria the 60-minute time period is solely based on prudent engineering judgment for completion of manual actions in order to satisfy the intent of Action 35. Operation beyond 60 minutes without auxiliary sampling service would need to be justified by engineering calculation to ensure continued compliance with 10 CFR Part 20 limits.

On those occasions when a radiation monitor or any system/component must be rendered inoperable to perform a surveillance test, the Station Management Manual (SSMM) policy regarding "the use of ACTION requirements to perform maintenance or a test" applies.

When a surveillance test must be performed on the WRGM, rendering it inoperable, Action 35 cannot be fully satisfied because of the nature of testing is incompatible with the Action 35 required installation of auxiliary sampling equipment. However, because the performance of the WRGM surveillance renders it inoperable for only a short period of time (e.g., less than one hour), it is reasonable to allow the surveillance test to be performed without the installation of the auxiliary sampling equipment. It should be noted that neither C.5.2 Action a. nor Action b. requires the immediate establishment of auxiliary sampling. However, if there is concern that the results of surveillance testing activities will identify the instrumentation as inoperable then it would be prudent to set up the auxiliary sampling equipment prior to surveillance testing. The prudent action would prevent the potential situation of continued release of gaseous effluents beyond 60 minutes without continuous monitoring/collection capability.

The current procedural method of collecting the grab sample from the plant vent release pathway requires the shutdown of the compensatory sampling equipment pump (for pressure equilibrium purposes) whenever a grab sample is to be withdrawn into the sample bottle. Shutting down the pump raises the question as to whether this action contradicts the "continuous collection" requirement of Action 35.

Action 35 allow effluent release to continue provided samples are continuously collected (as required in Table A.7.1-1) with auxiliary equipment whenever the number of channels OPERABLE is less than the Minimum Channels OPERABLE requirement. Table A.7.1-1 requires that the sampling frequency be continuous for iodine and particulate and a monthly grab sample for noble gasses (Kr and Xe). The ODCM also requires that the ratio of the sample flow rate to the sampled stream flow rate be known/determined for the time period covered by each dose or dose rate calculation made in accordance with C.7.1.1, C.7.2.1, and C.7.3.1 (i.e., weekly and/or monthly).

It must be noted that Action 35 pertains to the iodine and particulate samplers. For noble gas collection, Action 33 is applicable which requires grab samples be taken once per 12 hours and analyzed for radioactivity within 24 hours. Action 33 does not specify that auxiliary sampling for noble gas must be continuous; therefore, the concern for "continuous" monitoring/collection is not applicable for auxiliary sampling of noble gas.

Whenever the station is operating under the auspices of Action 35 the process of collecting grab samples by the auxiliary sampling method necessitates, on occasions, the temporary disablement of permanent and/or temporary equipment (e.g., installation, and disconnection of auxiliary sampling equipment, pressure equalization, etc.) in order to achieve and comply with the requirements of Action 35. Therefore, actions required (e.g. temporarily shutting down the sample pump in order to install / remove / equalize sample bottles, thus interrupting continuous flow) to obtain a grab sample are not considered actions that are contrary in meeting the intent of Action 35.

The temporary lowering of an RDMS channel setpoint, by RDMS data base manipulation to verify alarm/trip functions, does not prevent the channel from continuously monitoring radiation levels (except WRGM). Additionally, when the setpoint is lowered below background radiation levels the associated trip functions will actuate equipment in their required operating mode as if a high radiation condition exists. The channel remains OPERABLE because monitoring and associated trip functions are not inhibited. Refer to TS-142 for further details. Therefore, during performance of a RDMS channel DCOT, the LCO remains satisfied. Entering an ACTION statement is not appropriate nor required (except for WRGM DCOT). However, because the channel is in alarm status, increased operator vigilance is required to note any increase in radiation levels during the DCOT surveillance period and to take remedial actions if required.

C.5.2 ACTION Statement #33 is applied if RM-6504 is inoperable. The intent of the last sentence is that RM-6503 may be used instead of taking a grab sample. It is not intended that RM-6503 be used in place of RM-6504 and ACTION Statement #33 not entered.

RM-6504 monitors the radiation level of the gas stream at the outlet of the waste gas compressors. If a high radiation level is detected, RM-6504 automatically closes WG-FV-1602. The closing of WG-FV-1602 isolates a potential radiological release path to the environment. RM-6503, located at the inlet to the waste gas compressor, provides alarm and monitoring functions only. It does not have the ability to terminate a radiological release. Therefore, it cannot be used as a substitute for RM-6504.

C.5.2 ACTION b. permits operations to continue for up to 30 days with an inoperable instrument channel. If the inoperable instrument is not returned to OPERABLE status within this time, a report must be submitted explaining why the inoperability was not corrected in a timely manner. If RM-6503 were considered a alternate for RM-6504 then operations could continue indefinitely without the ability to automatically terminate a radiological release. This is clearly not the intent of C.5.2 ACTION Statement #33.

Table A.5.2-1, Radioactive Gaseous Effluent Monitoring Instrumentation, specifically lists RM-6504 as the instrument required to satisfy the Limiting Condition for operation. This table also states that the monitor provide the functions of alarm and automatic termination of release.

TABLE A.5.2-1

RADIOACTIVE GASEOUS EFFLUENT MONITORING INSTRUMENTATION

INSTRUMENT		MINIMUM CHANNELS OPERABLE	APPLICABILITY	ACTION
1.	(Not Used)			
2.	PLANT VENT-WIDE RANGE GAS MONITOR			
	a. Noble Gas Activity Monitor	1	*	33
	b. Iodine Sampler	1	*	35
	c. Particulate Sampler	1	*	35
	d. Flow Rate Monitor	1	*	32
	e. Sampler Flow Rate Monitor	1	*	32, 35
	f. Sample Line Temperature	1	*	36
3.	GASEOUS WASTE PROCESSING SYSTEM (Providing Alarm and Automatic Termination of Release - RM-6504)			
	a. Noble Gas Activity Monitor (Process)	1	*	33
4.	TURBINE GLAND SEAL CONDENSER EXHAUST			
	a. Iodine Sampler	1	***	35
	b. Particulate Sampler	1	***	35
	c. Sampler Flow Rate Indicator		***	32, 35
	d. Noble Gas Activity Monitor (RM 6505)	1	***	34

* At all times.

** (Not Used.)

*** When the gland seal exhauster is in operation.

TABLE A.5.2-1
(Continued)

ACTION STATEMENTS

ACTION 32 - With the number of channels OPERABLE less than the Minimum Channels OPERABLE requirement, effluent releases via this pathway may continue provided the flow rate is estimated at least once per 4 hours.

ACTION 33 - With the number of channels OPERABLE less than the Minimum Channels OPERABLE requirement, effluent releases via this pathway may continue provided grab samples are taken at least once per 12 hours and these samples are analyzed for radioactivity within 24 hours. For RM-6504, RM-6503 may be used instead of taking grab samples (see Bases for reporting requirements).

ACTION 34 - With RM-6505 INOPERABLE and the gland seal exhauster in operation, effluent releases via the turbine gland seal condenser exhaust may continue provided grab samples from condenser air evacuation pump effluent are taken at least once per 12 hours, and analyzed for radioactivity within 24 hours.

ACTION 35 - With the number of channels OPERABLE less than the Minimum Channels OPERABLE requirement, effluent releases via the affected pathway may continue provided samples are continuously collected with auxiliary sampling equipment as required in this document.

Auxiliary sampling must be initiated within 60 minutes. Additionally, the auxiliary sampling equipment need not be installed during surveillance activities provided the surveillance testing is completed in less than one hour. Actions required (e.g., temporarily shutting down the sample pump in order to install / remove / equalize sample bottles, thus interrupting continuous flow) to obtain a grab sample are not considered actions that are contrary in meeting the intent of this Action.

Auxiliary sample equipment includes sample flow monitoring to provide information used in the sample analysis.

ACTION 36 - If, for any reason, the sample line temperature cannot be maintained greater than 20° above outside ambient air temperature, the WRGM may remain OPERABLE provided dewpoint measurements are obtained every 12 hours verifying that conditions do not exist for condensation in the sample line with the inservice operating sample pump. (CX0901.38)

TABLE A.5.2-2

RADIOACTIVE GASEOUS EFFLUENT MONITORING INSTRUMENTATION SURVEILLANCE REQUIREMENTS

INSTRUMENT	CHANNEL CHECK	SOURCE CHECK	CHANNEL CALIBRATION	CHANNEL OPERATIONAL TEST	MODES FOR WHICH SURVEILLANCE IS REQUIRED
1 (Not Used)					
2. PLANT VENT-WIDE RANGE GAS MONITOR					
a. Noble Gas Activity Monitor	D	M	R(3)	Q(2)	*
b. Iodine Sampler	W	N.A	N.A.	N.A.	*
c. Particulate Sampler	W	N.A.	N.A.	N.A.	*
d. Flow Rate Monitor	D	N.A.	R	Q****	*
e. Sampler Flow Rate Monitor	D	N.A.	R	Q****	*
f. Sample Line Temperature	N.A.	N.A.	R	N.A.	*
3. GASEOUS WASTE PROCESSING SYSTEM (Providing Alarm and Automatic Termination of Release)					
a. Noble Gas Activity Monitor (Process)	D	N.A.	R(5)	Q(1)	*
4. TURBINE GLAND SEAL CONDENSER EXHAUST					
a. Iodine Sampler	W	N.A.	N.A.	N.A.	***
b. Particulate Sampler	W	N.A.	N.A.	N.A.	***
c. Sampler Flow Rate Indicator	D	N.A.	N.A.	N.A.	***
d. Noble Gas Activity Monitor (RM 6505)	D	M	R(3)	Q(2)	***

TABLE A.5.2-2
(Continued)

TABLE NOTATIONS

* At all times.

** (Not Used.)

*** When the gland seal exhauster is in operation.

**** The CHANNEL OPERATIONAL TEST for the flow rate monitor shall consist of a verification that the Radiation Data Management System (RDMS) indicated flow is consistent with the operational status of the plant.

(1) The DIGITAL CHANNEL OPERATIONAL TEST shall also demonstrate that automatic isolation of this pathway and Control Room alarm annunciation occurs if the instrument indicates measured levels above the normal or Surveillance test Alarm/Trip Setpoint.

(2) The DIGITAL CHANNEL OPERATIONAL TEST shall also demonstrate that Control Room alarm annunciation occurs if the instrument indicates measured levels above the normal or Surveillance test Alarm Setpoint.

(3) The initial channel calibration for radioactivity measurement instrumentation shall include the use of a known (traceable to National Institute for Standards and Technology) radioactive source positioned in a reproducible geometry with respect to the sensor. These standards should permit calibrating the system over its normal operating range of rate capabilities. For subsequent channel calibrations, sources that have been related to the initial calibration shall be used.

(4) (Not Used).

(5) The CHANNEL CALIBRATION shall be performed using sources of various activities covering the measurement range of the monitor to verify that the response is linear. Sources shall be used to verify the monitor response only for the intended energy range.

6.0 RADIOACTIVE LIQUID EFFLUENTS

6.1 Concentration

CONTROLS

C.6.1.1 The concentration of radioactive material released in liquid effluents at the point of discharge from the multiport diffuser (see Technical Specifications Figure 5.1-3) shall be limited to not more than ten times the concentrations specified in 10 CFR Part 20, Appendix B, Table 2, Column 2, for radionuclides other than dissolved or entrained noble gases. For dissolved or entrained noble gases, the concentration shall be limited to 2×10^{-4} µCi/ml total activity.

APPLICABILITY: At all times.

ACTION:

With the concentration of radioactive material released in liquid effluents at the point of discharge from the multiport diffuser exceeding the above limits, restore the concentration to within the above limits within 15 minutes.

SURVEILLANCE REQUIREMENTS

S.6.1.1 Radioactive liquid wastes shall be sampled and analyzed according to the sampling and analysis program specified in Table A.6.1-1.

S.6.1.2 The results of the radioactivity analyses shall be used in accordance with the methodology and parameters in Part B of the ODCM to assure that the concentrations at the point of release are maintained within the limits of Control C.6.1.1.

BASES

This Control is provided to ensure that the concentration of radioactive materials released in liquid waste effluents at the point of discharge from the multiport diffuser will be less than the concentration levels specified in 10 CFR Part 20, Appendix B to 20, Table 2, Column 2 (most restrictive). This limitation provides additional assurance that the levels of radioactive materials in bodies of water in UNRESTRICTED AREAS will result in exposures within (1) the Section II.A design objectives of Appendix I, 10 CFR Part 50, to a MEMBER OF THE PUBLIC, and (2) the limits of Appendix I, 10 CFR 20.1301 and 20.1302 to the population. Those values assure a continuous discharge at those concentrations (8760 hours per year). Pursuant to the requirements of 10 CFR 50.36a to maintain effluent concentrations as low as reasonably achievable (ALARA), Appendix I to10 CFR 50 specifies dose values that are a small percentage of the dose limits in 10 CFR 20.1301. Consistent with Appendix I to10 CFR 50, to allow operational flexibility, this specification in conjunction with the dose specification in Section C-6.2 permits an instantaneous concentration release rate up to a factor of ten times greater than specified in 10 CFR 20, Appendix B, Table 2, Column 2 while continuing to limit the total annual discharge to a small fraction of the allowable annual dose as specified in Appendix I.

The concentration limit for dissolved or entrained noble gases is based upon the assumption that Xe-135 is the controlling radioisotope and its MPC in air (submersion) was converted to an equivalent concentration in water using the methods described in International Commission on Radiological Protection (ICRP) Publication 2. For technical requirements associated with the release of liquid effluent, the method currently in use for controlling releases of dissolved and entrained noble gases is suitable for demonstrating conformance to the requirements of the "new" 10 CFR 20, Appendix B ECL concentration limits because the $2X10^{-4}\mu Ci/ml$ criterion is based on the "old" MPC value for Xe-135 as the driving radionuclide. Controlling liquid effluent to within the MPC values based on an instantaneous release rate (i.e., no time averaging of effluent concentrations) is considered more conservative than the requirements of the new Part 20 which have limits stated as effluent concentrations averaged over a year. In other words, if discharged dissolved and entrained noble gas concentrations remain within the instantaneous concentration limit of $2X10^{-4}\mu Ci/ml$ during the times that discharges actually take place, then there is reasonable confidence that the annual average limits established by the ECL values will also be met. This position is based on a June 30, 1993 letter from Thomas E. Murley (then Director, Office of Nuclear Reactor Regulation) to Thomas E. Tipton of NEI, in which the NRC responded to an industry inquiry on promulgation of a new Part 20.

Controls C.6.1.1 and C.5.1 provide controls to ensure that the concentration of radioactive materials released in liquid waste effluents at the point of discharge from the multiport diffuser will be less than the concentration levels specified in 10 CFR 20, Appendix B, Table 2, Column 2. As no LLD is specified for the compensatory samples taken for an inoperable PCCW Head Tank Rate of Change Monitor, the LLD for these samples must ensure that these limits are met.

Although the periodic Service Water System sample is counted to an LLD of $5x10^{-7}\mu Ci/cc$, the compensatory samples for inoperable SGBD Flash Tank and Turbine Building Sump Monitors are required to be counted to an LLD of $1x10^{-7}\mu Ci/cc$. This more restrictive limit will ensure that the limits of 10 CFR 20 are met during periods of PCCW Head Tank Rate of Change Monitor inoperability, thereby ensuring compliance with the requirements of the respective Controls.

Counting the required grab samples to an LLD of $1x10^{-7}\mu Ci/cc$ is therefore an acceptable method of complying with these requirements; it is not necessary to meet the LLD of $1x10^{-8}\mu Ci/cc$ specified as the equivalent sensitivity of the PCCW Head Tank Rate of Change Monitor.

TABLE A.6.1-1

RADIOACTIVE LIQUID WASTE SAMPLING AND ANALYSIS PROGRAM

Liquid Release Type	Sampling Frequency	Minimum Analysis Frequency	Type of Activity Analysis	Lower Limit of Detection (LLD) [1] (μCi/ml)
A. 1. Liquid Radwaste Test Tanks (WL-TK-63A+B) (BRS-TK58A+B) SGBD Waste Holdup Sump	P Each Batch	P Each Batch	Principal Gamma Emitters[3]	5×10^{-7}
2. Neutralization Tank (TK-32)			I-131	1×10^{-6}
3. Low Conductivity Tank (TK-274)	P One Batch/M	M	Dissolved and Entrained Gases (Gamma Emitters)	1×10^{-5}
(Batch Release)[2]	P Each Batch	M[4] Composite	H-3	1×10^{-5}
			Gross Alpha	1×10^{-7}
	P Each Batch	Q[4] Composite	Sr-89, Sr-90	5×10^{-8}
			Fe-55	1×10^{-6}
B. 1. Turbine Building Sump Effluent[8]	W Grab Sample	W	Principal Gamma Emitters[3]	5×10^{-7}
2. Steam Generator Blowdown [6][8]				
3. Condensate Polishing / Steam Generator Blowdown Demineralizer Megarinse [8][12]			I-131	1×10^{-6}
(Continuous Release) [5]	W Grab Sample	M	Dissolved and Entrained Gases (Gamma Emitters)	1×10^{-5}

TABLE A.6.1-1
RADIOACTIVE LIQUID WASTE SAMPLING AND ANALYSIS PROGRAM
(Continued)

Liquid Release Type	Sampling Frequency	Minimum Analysis Frequency	Type of Activity Analysis	Lower Limit of Detection (LLD) [1] (µCi/ml)
B. (Continued)	W Grab Sample	M	H-3	1×10^{-5}
			Gross Alpha	1×10^{-7}
	W Grab Sample	Q (9)	Sr-89, Sr-90	5×10^{-8}
			Fe-55	1×10^{-6}
C. Service Water[7][10]	W Grab Sample	W	Principal Gamma Emitters[3]	5×10^{-7}
			I-131	1×10^{-6}
	W Grab Sample	M	Dissolved and Entrained Gases (Gamma Emitters)	1×10^{-5}
	W Grab Sample	M	H-3	1×10^{-5}
			Gross Alpha	1×10^{-7}
	W Grab Sample	Q	Sr-89, Sr-90	5×10^{-8}
			Fe-55	1×10^{-6}

TABLE A.6.1-1
RADIOACTIVE LIQUID WASTE SAMPLING AND ANALYSIS PROGRAM
(Continued)

Liquid Release Type	Sampling Frequency	Minimum Analysis Frequency	Type of Activity Analysis	Lower Limit of Detection (LLD) [1] (µCi/ml)
D. Subsurface Dewatering [11]	M Grab Sample	M	Principal Gamma Emitters [3]	5×10^{-7}
			H-3	2×10^{-6}
	M Grab Sample	M	Gross Alpha	1×10^{-7}
	M Grab Sample	Q	Sr-89, Sr-90	5×10^{-8}
			Fe-55	1×10^{-6}

P - Prior to Discharge
W - Weekly
M - Monthly
Q - Quarterly

TABLE A.6.1-1
RADIOACTIVE LIQUID WASTE SAMPLING AND ANALYSIS PROGRAM
(Continued)

Notations

(1) The LLD is defined, for purposes of these specifications, as the smallest concentration of radioactive material in a sample that will yield a net count, above system background, that will be detected with 95 percent probability with only 5 percent probability of falsely concluding that a blank observation represents a "real" signal.

For a particular measurement system, which may include radiochemical separation:

$$LLD = \frac{4.66\, S_b}{E \times V \times 2.22 \times 10^6 \times Y \times \exp(-\lambda \Delta t)}$$

Where:

LLD = the "a priori" lower limit of detection (microcurie per unit mass or volume),

4.66 = a constant derived from the K_{alpha} and K_{beta} values for the 95% confidence level;

S_b = the standard deviation of the background counting rate or of the counting rate of a blank sample as appropriate (counts per minute),

E = the counting efficiency (counts per disintegration),

V = the sample size (units of mass or volume),

2.22×10^6 = the number of disintegrations per minute per microcurie,

Y = the fractional radiochemical yield, when applicable,

λ = the radioactive decay constant for the particular radionuclide (s^{-1}), and

Δt = the elapsed time between the midpoint of sample collection and the time of counting(s).

Typical values of E, V, Y, and Δt should be used in the calculation.

It should be recognized that the LLD is defined as an a priori (before the fact) limit representing the capability of a measurement system and not as an a posteriori (after the fact) limit for a particular measurement.

(2) A batch release is the discharge of liquid wastes of a discrete volume. Prior to sampling for analyses, each batch shall be isolated, and then thoroughly mixed to assure representative sampling.

TABLE A.6.1-1
RADIOACTIVE LIQUID WASTE SAMPLING AND ANALYSIS PROGRAM
(Continued)

Notations
(Continued)

(3) The principal gamma emitters for which the LLD specification applies include the following radionuclides: Mn-54, Fe-59, Co-58, Co-60, Zn-65, Mo-99, Cs-134, Cs-137, Ce-141, and Ce-144. This list does not mean that only these nuclides are to be considered. Other gamma peaks that are identifiable, together with those of the above nuclides, shall also be analyzed and reported in the Annual Radioactive Effluent Release Report in accordance with Technical Specification 6.8.1.4. Isotopes which are not detected should be reported as "not detected." Values determined to be below detectable levels are not used in dose calculations.

(4) A composite sample is one in which the quantity of liquid sampled is proportional to the quantity of liquid waste discharged and in which the method of sampling employed results in a specimen that is representative of the liquids released.

(5) A continuous release is the discharge of liquid wastes of a nondiscrete volume, e.g., from a volume of a system that has an input flow during the continuous release.

(6) Sampling and analysis is only required when Steam Generator Blowdown is directed to the discharge transition structure.

(7) Principal gamma emitters shall be analyzed weekly in Service Water. Sample and analysis requirements for dissolved and entrained gases, tritium, gross alpha, strontium 89 and 90, and Iron 55 shall only be required when analysis for principal gamma emitters exceeds the LLD.

The following are additional sampling and analysis requirements:

a. PCCW sampled and analyzed weekly for principal gamma emitters.

b. Sample Service Water System (SWS) daily for principal gamma emitters whenever primary component cooling water (PCCW) activity exceeds $1x10^{-3}$ μC/cc.

c. With the PCCW System radiation monitor inoperable, sample PCCW and SWS daily for principal gamma emitters.

d. With a confirmed PCCW/SWS leak and PCCW activity in excess of $1x10^{-4}$ μC/cc, sample SWS every 12 hours for principal gamma emitters.

e. The setpoint on the PCCW head tank liquid rate-of-change alarm will be set to ensure that its sensitivity to detect a PCCW/SWS leak is equal to or greater than that of an SWS radiation monitor, located in the unit's combined SWS discharge, with an LLD of $1x10^{-8}$ μC/cc. If this sensitivity cannot be achieved, the SWS will be sampled once every 12 hours.

TABLE A.6.1-1
RADIOACTIVE LIQUID WASTE SAMPLING AND ANALYSIS PROGRAM
(Continued)

Notations
(Continued)

(8) If the Turbine Building Sump, Steam Generator Blowdown Flash Tank, Steam Generator Blowdown Demineralizer Megarinse, or Condensate Polishing Demineralizer Megarinse isolate due to high concentration of radioactivity, that liquid stream will be sampled and analyzed for Iodine-131 and principal gamma emitters prior to release.

(9) Quarterly composite analysis requirements shall only be required when analysis for principal gamma emitters indicate positive radioactivity.

(10) A grab sample can be considered as a combination of aliquots taken from each SW train during the same collection cycle or as individual samples taken from each train in service.

(11) Principal gamma emitters and tritium shall be analyzed monthly in subsurface dewatering samples. Sample analysis requirements for gross alpha, strontium 89 and 90, and Iron 55 shall only be required when analysis for principal gamma emitters exceeds the LLD.

(12) Condensate Polishing Demineralizer or Steam Generator Blowdown Megarinse water shall be sampled and analyzed for principal gamma emitters and I-131 prior to initiation of the megarinse discharge to the circulating water system

6.2 Dose

CONTROLS

C.6.2.1 The dose or dose commitment to a MEMBER OF THE PUBLIC from radioactive materials in liquid effluents released, from each unit, to UNRESTRICTED AREAS (see Technical Specification Figure 5.1-3) shall be limited

a. During any calendar quarter to less than or equal to 1.5 mrems to the whole body and to less than or equal to 5 mrems to any organ, and

b. During any calendar year to less than or equal to 3 mrems to the whole body and to less than or equal to 10 mrems to any organ.

APPLICABILITY: At all times.

ACTION:

With the calculated dose from the release of radioactive materials in liquid effluents exceeding any of the above limits, prepare and submit to the Commission within 30 days, pursuant to Technical Specification 6.8.2, a Special Report that identifies the cause(s) for exceeding the limit(s) and defines the corrective actions that have been taken to reduce the releases and the proposed corrective actions to be taken to assure that subsequent releases will be in compliance with the above limits.

SURVEILLANCE REQUIREMENTS

S.6.2.1 Cumulative dose contributions from liquid effluents for the current calendar quarter and the current calendar year shall be determined in accordance with the methodology and parameters in Part B of the ODCM at least once per 31 days.

This Control is provided to implement the requirements of Sections II.A, III.A, and IV.A of Appendix I to 10 CFR Part 50. The Control implements the guides set forth in Section II.A of Appendix I. The ACTION statements provide the required operating flexibility and at the same time implement the guides set forth in Section IV.A of Appendix I to assure that the releases of radioactive material in liquid effluents to UNRESTRICTED AREAS will be kept as low as is reasonably achievable. The dose calculation methodology and parameters in the ODCM implement the requirements in Section III.A of Appendix I that conformance with the guides of Appendix I be shown by calculational procedures based on models and data, such that the actual exposure of a MEMBER OF THE PUBLIC through appropriate pathways is unlikely to be substantially underestimated. The equations specified in the ODCM for calculating the doses due to the actual release rates of radioactive materials in liquid effluents are consistent with the methodology provided in Regulatory Guide 1.109, "Calculation of Annual Doses to Man from Routine Releases of Reactor Effluents for the Purpose of Evaluating Compliance with 10 CFR Part 50, Appendix I," Revision 1, October 1977 and Regulatory Guide 1.113, "Estimating Aquatic Dispersion of Effluents from Accidental and Routine Reactor Releases for the Purpose of Implementing Appendix I," April 1977.

6.3 Liquid Radwaste Treatment System

CONTROLS

C.6.3.1 The Liquid Radwaste Treatment System shall be OPERABLE and appropriate portions of the system shall be used to reduce releases of radioactivity when the projected doses due to the liquid effluent to UNRESTRICTED AREAS (see Technical Specification Figure 5.1-3) would exceed 0.06 mrem to the whole body or 0.2 mrem to any organ in a 31-day period.

APPLICABILITY: At all times.

ACTION:

With radioactive liquid waste being discharged without treatment and in excess of the above limits and any portion of the Liquid Radwaste Treatment System which could reduce the radioactive liquid waste discharged not in operation, prepare and submit to the Commission within 30 days, pursuant to Specification 6.8.2, a Special Report that includes the following information:

a. Explanation of why liquid radwaste was being discharged without treatment, identification of any inoperable equipment or subsystems, and the reason for the inoperability,

b. Action(s) taken to restore the inoperable equipment to OPERABLE status, and

c. Summary description of action(s) taken to prevent a recurrence.

SURVEILLANCE REQUIREMENTS

S.6.3.1 Doses due to liquid releases from each unit to UNRESTRICTED AREAS shall be projected at least once per 31 days in accordance with the methodology and parameters in Part B of the ODCM when Liquid Radwaste Treatment Systems are not being fully utilized.

S.6.3.2 The installed Liquid Radwaste Treatment System shall be considered OPERABLE by meeting Controls C.6.1.1 and C.6.2.1.

The OPERABILITY of the Liquid Radwaste Treatment System ensures that this system will be available for use whenever liquid effluents require treatment prior to release to the environment. The requirement that the appropriate portions of this system be used when specified provides assurance that the releases of radioactive materials in liquid effluents will be kept as low as is reasonably achievable. This specification implements the requirements of 10 CFR 50.36a, General Design Criterion 60 of Appendix A to 10 CFR Part 50, and the design objective given in Section II.D of Appendix I to 10 CFR Part 50. The specified limits governing the use of appropriate portions of the Liquid Radwaste Treatment System were specified as a suitable fraction of the dose design objectives set forth in Section II.A of Appendix A to 10 CFR Part 50 for liquid effluents.

7.0 RADIOACTIVE GASEOUS EFFLUENTS

7.1 Dose Rate

CONTROLS

C.7.1.1 The dose rate due to radioactive materials released in gaseous effluents from the site to areas at and beyond the SITE BOUNDARY (see Technical Specification Figure 5.1-1) shall be limited to the following:

a. For noble gases: Less than or equal to 500 mrems/yr to the whole body and less than or equal to 3000 mrems/yr to the skin, and

b. For Iodine-131, for Iodine-133, for tritium, and for all radionuclides in particulate form with half-lives greater than 8 days: Less than or equal to 1500 mrems/yr to any organ.

APPLICABILITY: At all times.

ACTION:

With the dose rate(s) exceeding the above limits, decrease the release rate within 15 minutes to within the above limit(s).

SURVEILLANCE REQUIREMENTS

S.7.1.1 The dose rate due to noble gases in gaseous effluents shall be determined to be within the above limits in accordance with the methodology and parameters in Part B of the ODCM.

S.7.1.2 The dose rate due to Iodine-131, Iodine-133, tritium, and all radionuclides in particulate form with half-lives greater than 8 days in gaseous effluents shall be determined to be within the above limits in accordance with the methodology and parameters in the ODCM by obtaining representative samples and performing analyses in accordance with the sampling and analysis program specified in Table A.7.1-1.

This Control is provided to ensure that the dose at any time at and beyond the SITE BOUNDARY from gaseous effluents from all units on the site will be within the annual dose limits of 10 CFR Part 20 to UNRESTRICTED AREAS. The annual dose limits are the doses associated with the concentrations of 10 CFR Part 20, Appendix B, Table 2, Column 1. These limits provide reasonable assurance that radioactive material discharged in gaseous effluents will not result in the exposure of a MEMBER OF THE PUBLIC in an UNRESTRICTED AREA, either within or outside the SITE BOUNDARY, to annual average concentrations exceeding the limits specified in Appendix B, Table 2 of 10 CFR Part 20 (10 CFR Part 20.1302[c]). For MEMBERS OF THE PUBLIC who may at times be within the SITE BOUNDARY, the occupancy of the MEMBER OF THE PUBLIC will usually be sufficiently low to compensate for any increase in the atmospheric diffusion factor above that for the SITE BOUNDARY. Examples of calculations for such MEMBERS OF THE PUBLIC, with the appropriate occupancy factors, shall be given in the ODCM. The specified release rate limits restrict, at all times, the corresponding gamma and beta dose rates above background to a MEMBER OF THE PUBLIC at or beyond the SITE BOUNDARY to less than or equal to 500 mrems/year to the whole body or to less than or equal to 3000 mrems/year to the skin. These release rate limits also restrict, at all times, the corresponding thyroid dose rate above background to a child via the inhalation pathway to less than or equal to 1500 mrems/year.

TABLE A.7.1-1

RADIOACTIVE GASEOUS WASTE SAMPLING AND ANALYSIS PROGRAM

Gaseous Release Type	Sampling Frequency	Minimum Analysis Frequency	Type of Activity Analysis	Lower Limit of Detection[1] (LLD) (μCi/cc)
1. Plant Vent	M[3][4] Grab Sample	M	Principal Gamma Emitters[2]	$1x10^{-4}$
			H-3	$1x10^{-6}$
	Continuous[5]	W[6] Charcoal Sample	I-131	$1x10^{-12}$
	Continuous[5]	W[6] Particulate Sample	Principal Gamma Emitters[2]	$1x10^{-11}$
	Continuous[5]	M Composite Particulate Sample	Gross Alpha	$1x10^{-11}$
	Continuous[5]	Q Composite Particulate Sample	Sr-89, Sr-90	$1x10^{-11}$
2. Condenser Air Removal Exhaust	M[7] Grab Sample	M[7] Noble Gases	Principal Gamma Emitters[2]	$1x10^{-4}$
			H-3	$1x10^{-6}$

TABLE A.7.1-1
RADIOACTIVE GASEOUS WASTE SAMPLING
AND ANALYSIS PROGRAM
(Continued)

Gaseous Release Type	Sampling Frequency	Minimum Analysis Frequency	Type of Activity Analysis	Lower Limit of Detection[1] (LLD) (μCi/cc)
3. Gland Steam Packing Exhauster	Continuous	W Particulate Sample	Principal Gamma Emitters[2]	$1x10^{-11}$
	Continuous	W Charcoal Sample	I-131	$1x10^{-12}$
	Continuous	M Composite Particulate Sample	Gross Alpha	$1x10^{-11}$
	Continuous	Q Composite Particulate Sample[8]	Sr-89, Sr-90	$1x10^{-11}$
4. Containment Purge	P[3] Each Purge Grab Sample	P Each Purge	Principal Gamma Emitters[2]	$1x10^{-4}$
			H-3 (oxide)	$1x10^{-6}$

TABLE A.7.1-1
RADIOACTIVE GASEOUS WASTE SAMPLING
AND ANALYSIS PROGRAM
(Continued)

Notations

(1) The LLD is defined, for purposes of these specifications, as the smallest concentration of radioactive material in a sample that will yield a net count, above system background, that will be detected with 95 percent probability with only 5 percent probability of falsely concluding that a blank observation represents a "real" signal.

For a particular measurement system, which may include radiochemical separation:

$$LLD = \frac{4.66\, S_b}{E \times V \times 2.22 \times 10^6 \times Y \times \exp(-\lambda \Delta t)}$$

Where:

LLD = the "a priori" lower limit of detection (microcurie per unit mass or volume),

4.66 = a constant derived from the K_{alpha} and K_{beta} values for the 95% confidence level;

S_b = the standard deviation of the background counting rate or of the counting rate of a blank sample as appropriate (counts per minute),

E = the counting efficiency (counts per disintegration),

V = the sample size (units of mass or volume),

2.22×10^6 = the number of disintegrations per minute per microcurie,

Y = the fractional radiochemical yield, when applicable,

λ = the radioactive decay constant for the particular radionuclide (s^{-1}), and

Δt = the elapsed time between the midpoint of sample collection and the time of counting(s).

Typical values of E, V, Y, and Δt should be used in the calculation.

It should be recognized that the LLD is defined as an a priori (before the fact) limit representing the capability of a measurement system and not as an a posteriori (after the fact) limit for a particular measurement.

TABLE A.7.1-1
RADIOACTIVE GASEOUS WASTE SAMPLING
AND ANALYSIS PROGRAM
(Continued)

Notations
(Continued)

(2) The principal gamma emitters for which the LLD specification applies include the following radionuclides: Kr-87, Kr-88, Xe-133, Xe-133m, Xe-135, and Xe-138 in noble gas releases and Mn-54, Fe-59, Co-58, Co-60, Zn-65, Mo-99, I-131, Cs-134, Cs-137, Ce-141 and Ce-144 in iodine and particulate releases. This list does not mean that only these nuclides are to be considered. Other gamma peaks that are identifiable, together with those of the above nuclides, shall also be analyzed and reported in the Annual Radioactive Effluent Release Report in accordance with Technical Specification 6.8.1.4 and Part A, Section 10.2 of the ODCM. Isotopes which are not detected should be reported as "not detected." Values determined to be below detectable levels are not used in dose calculations.

(3) Sampling and analysis shall also be performed following shutdown, startup, or a THERMAL POWER change exceeding 15 percent of RATED THERMAL POWER within a one hour period unless; 1) analysis shows that the DOSE EQUIVALENT I-131 concentrations in the primary coolant has not increased more than a factor of 3; 2) the noble gas activity monitor for the plant vent has not increased by more than a factor of 3. For containment purge, requirements apply only when purge is in operation.

(4) Tritium grab samples shall be taken at least once per 24 hours when the refueling canal is flooded.

(5) The ratio of the sample flow rate to the sampled stream flow rate shall be known for the time period covered by each dose or dose rate calculation made in accordance with Controls C.7.1.1, C.7.2.1, and C.7.3.1.

(6) Samples shall be changed at least once per seven (7) days and analyses shall be completed within 48 hours after changing, or after removal from sampler. Sampling shall also be performed at least once per 24 hours for at least seven (7) days following each shutdown, startup, or THERMAL POWER change exceeding 15 percent of RATED THERMAL POWER within a one-hour period and analyses shall be completed within 48 hours of changing. When samples collected for 24 hours are analyzed, the corresponding LLDs may be increased by a factor of 10. This requirement does not apply if 1) analysis shows that the DOSE EQUIVALENT I-131 concentration in the reactor coolant has not increased more than a factor of 3; and 2) the noble gas monitor shows that effluent activity has not increased more than a factor of 3.

(7) Samples shall be taken prior to start-up of condenser air removal system when there have been indications of a primary to secondary leak.

(8) Quarterly composite analysis requirements shall only be required when analysis for principal gamma emitters indicate positive radioactivity.

7.2 Dose - Noble Gases

CONTROLS -

C.7.2.1 The air dose due to noble gases released in gaseous effluents to areas at and beyond the SITE BOUNDARY (see Technical Specification Figure 5.1-1) shall be limited to the following:

a. During any calendar quarter: Less than or equal to 5 mrads for gamma radiation and less than or equal to 10 mrads for beta radiation, and

b. During any calendar year: Less than or equal to 10 mrads for gamma radiation and less than or equal to 20 mrads for beta radiation.

APPLICABILITY: At all times.

ACTION:

With the calculated air dose from radioactive noble gases in gaseous effluents exceeding any of the above limits, prepare and submit to the Commission within 30 days, pursuant to Technical Specification 6.8.2, a Special Report that identifies the cause(s) for exceeding the limit(s) and defines the corrective actions that have been taken to reduce the releases and the proposed corrective actions to be taken to assure that subsequent releases will be in compliance with the above limits.

SURVEILLANCE REQUIREMENTS

S.7.2.1 Cumulative dose contributions for the current calendar quarter and current calendar year for noble gases shall be determined in accordance with the methodology and parameters in Part B of the ODCM at least once per 31 days.

This Control is provided to implement the requirements of Sections II.B, III.A, and IV.A of Appendix I to 10 CFR Part 50. The Control implements the guides set forth in Section I.B of Appendix I. The ACTION statements provide the required operating flexibility and at the same time implement the guides set forth in Section IV.A of Appendix I at the SITE BOUNDARY that the releases of radioactive material in gaseous effluents to UNRESTRICTED AREAS will be kept as low as reasonably achievable. The Surveillance Requirements implement the requirements in Section III.A of Appendix I that conformance with the guides of Appendix I be shown by calculational procedures based on models and data such that the actual exposure of a MEMBER OF THE PUBLIC through appropriate pathways is unlikely to be substantially underestimated. The dose calculation methodology and parameters established in the ODCM for calculating the doses due to the actual release rates of radioactive noble gases in gaseous effluents are consistent with the methodology provided in Regulatory Guide 1.109, "Calculation of Annual Doses to Man from Routine Releases of Reactor Effluents for the Purpose of Evaluating Compliance with 10 CFR Part 50, Appendix I," Revision 1, October 1977, and Regulatory Guide 1.111, "Methods for Estimating Atmospheric Transport and Dispersion of Gaseous Effluents in Routine Releases from Light-Water Cooled Reactors," Revision 1, July 1977. The ODCM equations provided for determining the air doses at and beyond the SITE BOUNDARY are based upon the historical average atmospheric conditions.

7.3 Dose - Iodine-131, Iodine-133, Tritium, and Radioactive Material in Particulate Form

CONTROLS

C.7.3.1 The dose to a MEMBER OF THE PUBLIC from Iodine-131, Iodine-133, tritium, and all radionuclides in particulate form with half-lives greater than 8 days in gaseous effluents released to areas at and beyond the SITE BOUNDARY (see Technical Specification Figure 5.1-1) shall be limited to the following:

a. During any calendar quarter: Less than or equal to 7.5 mrems to any organ, and

b. During any calendar year: Less than or equal to 15 mrems to any organ.

APPLICABILITY: At all times.

ACTION:

With the calculated dose from the release of Iodine-131, Iodine-133, tritium, and radionuclides in particulate form with half-lives greater than 8 days, in gaseous effluents exceeding any of the above limits, prepare and submit to the Commission within 30 days, pursuant to Technical Specification 6.8.2, a Special Report that identifies the cause(s) for exceeding the limit(s) and defines the corrective actions that have been taken to reduce the releases and the proposed corrective actions to be taken to assure that subsequent releases will be in compliance with the above limits.

SURVEILLANCE REQUIREMENTS

S.7.3.1 Cumulative dose contributions for the current calendar quarter and current calendar year for Iodine-131, Iodine-133, tritium, and radionuclides in particulate form with half-lives greater than 8 days shall be determined in accordance with the methodology and parameters in Part B of the ODCM at least once per 31 days.

This Control is provided to implement the requirements of Sections II.C, III.A, and IV.A of Appendix I to 10 CFR Part 50. The Controls are the guides set forth in Section II.C of Appendix I. The ACTION statements provide the required operating flexibility and at the same time implement the guides set forth in Section IV.A of Appendix I to assure that the releases of radioactive materials in gaseous effluents at the SITE BOUNDARY will be kept as low as reasonably achievable. The ODCM calculation methods specified in the Surveillance Requirements implement the requirements in Section III.A of Appendix I that conformance with the guides of Appendix I be shown by calculational procedures based on models and data such that the actual exposure of a MEMBER OF THE PUBLIC through appropriate pathways is unlikely to be substantially underestimated. The ODCM calculational methodology and parameters for calculating the doses due to the actual release rates of the subject materials are consistent with the methodology provided in Regulatory Guide 1.109, "Calculation of Annual Doses to Man from Routine Releases of Reactor Effluents for the Purpose of Evaluating Compliance with 10 CFR Part 50, Appendix I," Revision 1, October 1977, and Regulatory Guide 1.111, "Methods for Estimating Atmospheric Transport and Dispersion of Gaseous Effluents in Routine Releases from Light-Water Cooled Reactors," Revision 1, July 1977. These equations also provide for determining the actual doses based upon the historical Iodine-133, tritium, and radionuclides in particulate form with half-lives greater than 8 days are dependent upon the existing radionuclide pathways to man in the areas at and beyond the SITE BOUNDARY. The pathways that were examined in the development of the calculations were

(1) individual inhalation of airborne radionuclides,

(2) deposition of radionuclides onto green leafy vegetation with subsequent consumption by man,

(3) deposition of radionuclides onto grassy areas where milk animals and meat-producing animals graze followed by human consumption of that milk and meat, and

(4) deposition of radionuclides on the ground followed by subsequent human exposure.

7.4 Gaseous Radwaste Treatment System

CONTROLS

C.7.4.1 The VENTILATION EXHAUST TREATMENT SYSTEM and the GASEOUS RADWASTE TREATMENT SYSTEM shall be OPERABLE and appropriate portions of these system shall be used to reduce releases of radioactivity when the projected doses in 31 days due to gaseous effluent releases to areas at and beyond the SITE BOUNDARY (see Technical Specification Figure 5.1-1) would exceed

a. 0.2 mrad to air from gamma radiation, or

b. 0.4 mrad to air from beta radiation, or

c. 0.3 mrem to any organ of a MEMBER OF THE PUBLIC.

APPLICABILITY: At all times.

ACTION:

With radioactive gaseous waste being discharged without treatment and in excess of the above limits, prepare and submit to the Commission within 30 days, pursuant to Specification 6.8.2, a Special Report that includes the following information:

a. Identification of any inoperable equipment or subsystems, and the reason for the inoperability,

b. Action(s) taken to restore the inoperable equipment to OPERABLE status, and

c. Summary description of action(s) taken to prevent a recurrence.

SURVEILLANCE REQUIREMENTS

S.7.4.1 Doses due to gaseous releases from each unit to areas at and beyond the SITE BOUNDARY shall be projected at least once per 31 days in accordance with the methodology and parameters in Part B of the ODCM when Gaseous Radwaste Treatment Systems are not being fully utilized.

S.7.4.2 The installed VENTILATION EXHAUST TREATMENT SYSTEM and GASEOUS RADWASTE TREATMENT SYSTEM shall be considered OPERABLE by meeting Controls C.7.1.1, and C.7.2.1, or C.7.3.1.

The OPERABILITY of the GASEOUS RADWASTE TREATMENT SYSTEM and the VENTILATION EXHAUST TREATMENT SYSTEM ensures that the systems will be available for use whenever gaseous effluents require treatment prior to release to the environment. The requirement that the appropriate portions of these systems be used, when specified, provides reasonable assurance that the releases of radioactive materials in gaseous effluents will be kept as low as is reasonably achievable. This Control implements the requirements of 10 CFR 50.36a, General Design Criterion 60 of Appendix A to 10 CFR Part 50, and the design objectives given in Section II.D of Appendix I to 10 CFR Part 50. The specified limits governing the use of appropriate portions of the systems were specified as a suitable fraction of the dose design objectives set forth in Sections II.B and II.C of Appendix I to 10 CFR Part 50, for gaseous effluents.

8.0 TOTAL DOSE

CONTROL

C.8.1.1 The annual (calendar year) dose or dose commitment to any MEMBER OF THE PUBLIC due to releases of radioactivity and to radiation from uranium fuel cycle sources shall be limited to less than or equal to 25 mrems to the whole body or any organ, except the thyroid, which shall be limited to less than or equal to 75 mrems.

APPLICABILITY: At all times.

ACTION:

With the calculated doses from the release of radioactive materials in liquid or gaseous effluents exceeding twice the limits of Controls C.6.2.1.a, C.6.2.1.b, C.7.2.1.a, C.7.2.1.b, C.7.3.1.a, or C.7.3.1.b, calculations shall be made including direct radiation contributions from the units and from outside storage tanks to determine whether the above limits of Control C.8.1.1 have been exceeded. If such is the case, prepare and submit to the Commission within 30 days, pursuant to Technical Specification 6.8.2, a Special Report that defines the corrective action to be taken to reduce subsequent releases to prevent recurrence of exceeding the above limits and includes the schedule for achieving conformance with the above limits. This Special Report, as defined in 10 CFR 20.405(c), shall include an analysis that estimates the radiation exposure (dose) to a MEMBER OF THE PUBLIC from uranium fuel cycle sources, including all effluent pathways and direct radiation, for the calendar year that includes the release(s) covered by this report. It shall also describe levels of radiation and concentrations of radioactive material involved, and the cause of the exposure levels or concentrations. If the estimated dose(s) exceeds the above limits, and if the release condition resulting in violation of 40 CFR Part 190 has not already been corrected, the Special Report shall include a request for a variance in accordance with the provisions of 40 CFR Part 190. Submittal of the report is considered a timely request, and a variance is granted until staff action on the request is complete.

SURVEILLANCE REQUIREMENTS

S.8.1.1 Cumulative dose contributions from liquid and gaseous effluents shall be determined in accordance with Surveillance Requirement S.6.2.1, S.7.2.1, and S.7.3.1, and in accordance with the methodology and parameters in Part B of the ODCM.

S.8.1.2 Cumulative dose contributions from direct radiation from the units and from radwaste storage tanks shall be determined in accordance with the methodology and parameters in Part B of the ODCM. This requirement is applicable only under conditions set forth in ACTION a. of Control C.8.1.1.

BASES

This Control is provided to meet the dose limitations of 40 CFR Part 190 that have been incorporated into 10 CFR Part 20 by 46FR18525. The specification requires the preparation and submittal of a Special Report whenever the calculated doses due to releases of radioactivity and to radiation from uranium fuel cycle sources exceed 25 mrems to the whole body or any organ, except the thyroid, which shall be limited to less than or equal to 75 mrems. For sites containing up to four reactors, it is highly unlikely that the resultant dose to a MEMBER OF THE PUBLIC will exceed the dose limits of 40 CFR Part 190 if the individual reactors remain within twice the dose design objectives of Appendix I, and if direct radiation doses from the units (including outside storage tanks, etc.) are kept small. The Special Report will describe a course of action that should result in the limitation of the annual dose to a MEMBER OF THE PUBLIC to within the 40 CFR Part 190 limits. For the purposes of the Special Report, it may be assumed that the dose commitment to the MEMBER OF THE PUBLIC from other uranium fuel cycle sources is negligible, with the exception that dose contributions from other nuclear fuel cycle facilities at the same site are within a radius of 8 km must be considered. If the dose to any MEMBER OF THE PUBLIC is estimated to exceed the requirements of 40 CFR Part 190, the Special Report with a request for a variance (provided the release conditions resulting in violation of 40 CFR Part 190 have not already been corrected), in accordance with the provisions of 40 CFR 190.11 and 10 CFR 20.405c, is considered to be a timely request and fulfills the requirements of 40 CFR Part 190 until NRC staff action is completed. The variance only relates to the limits of 40 CFR Part 190, and does not apply in any way to the other requirements for dose limitation of 10 CFR Part 20, as addressed in Controls C.6.1.1 and C.7.1.1. An individual is not considered a MEMBER OF THE PUBLIC during any period in which he/she is engaged in carrying out any operation that is part of the nuclear fuel cycle.

9.0 RADIOLOGICAL ENVIRONMENTAL MONITORING

9.1 Monitoring Program

CONTROL

C.9.1.1 The Radiological Environmental Monitoring Program (REMP) shall be conducted as specified in Table A.9.1-1.

APPLICABILITY: At all times.

ACTION:

a. With the REMP not being conducted as specified in Table A.9.1-1, prepare and submit to the Commission, in the Annual Radiological Environmental Operating Report required by Technical Specification 6.8.1.3 and Part A, Section 10.1 of the ODCM, a description of the reasons for not conducting the program as required and the plans for preventing a recurrence.

b. With the level of radioactivity as the result of plant effluents in an environmental sampling medium at a specified location exceeding the reporting levels of Table A.9.1-3 when averaged over any calendar quarter, prepare and submit to the Commission within 30 days from receipt of the laboratory analyses, pursuant to Technical Specification 6.8.2, a Special Report that identifies the cause(s) for exceeding the limit(s) and defines the corrective actions to be taken to reduce radioactive effluents so that the potential annual dose* to a MEMBER OF THE PUBLIC is less than the calendar year limits of Control C.6.2.1, C.7.2.1, or C.7.3.1. When more than one of the radionuclides in the REMP are detected in the sampling medium, this report shall be submitted if

$$\frac{\text{concentration (1)}}{\text{reporting level (1)}} + \frac{\text{concentration (2)}}{\text{reporting level (2)}} + \ldots \geq 1.0$$

When radionuclides other than those listed in the REMP are detected and are the result of plant effluents, this report shall be submitted if the potential annual dose* to a MEMBER OF THE PUBLIC from all radionuclides is equal to or greater than the calendar year limits of Control C.6.2.1, C.7.2.1, or C.7.3.1. This report is not required if the measured level of radioactivity was not the result of plant effluents; however, in such an event, the condition shall be reported and described in the Annual Radiological Environmental Operating Report required by Technical Specification 6.8.1.3 and Part A, Section 10.1 of the ODCM.

*The methodology and parameters used to estimate the potential annual dose to a MEMBER OF THE PUBLIC shall be indicated in this report.

ACTION: (Continued)

With milk or fresh leafy vegetable samples unavailable from one or more of the sample locations required by the REMP, identify specific locations for obtaining replacement samples and add them within 30 days to the REMP given in the ODCM. The specific locations from which samples were unavailable may then be deleted from the monitoring program. Pursuant to Technical Specification 6.13, and Part A, Section 10.2, of the ODCM, submit in the next Annual Radioactive Effluent Release Report documentation for a change in the ODCM including a revised figure(s) and table for the ODCM reflecting the new location(s) with supporting information identifying the cause of the unavailability of samples and justifying the selection of the new locations(s) for obtaining samples.

SURVEILLANCE REQUIREMENTS

S.9.1.1 The radiological environmental monitoring samples shall be collected pursuant to Table A.9.1-1 from the specific locations given in the table and figure(s) in Part B of the ODCM, and shall be analyzed pursuant to the requirements of Table A.9.1-1 and the detection capabilities required by Table A.9.1-2.

BASES

The REMP required by this Control provides representative measurements of radiation and of radioactive materials in those exposure pathways and for those radionuclides that lead to the highest potential radiation exposures of MEMBERS OF THE PUBLIC resulting from the plant operation. This monitoring program implements Section IV.B.2 of Appendix I to 10 CFR Part 50, and thereby supplements the REMP by verifying that the measurable concentrations of radioactive materials and levels of radiation are not higher than expected on the basis of the effluent measurements and the modeling of the environmental exposure pathways. Guidance for this monitoring program is provided by the Radiological Assessment Branch Technical Position on Environmental Monitoring, Revision 1, November 1979. The initially specified monitoring program will be effective for at least the first 3 years of commercial operation. Following this period, program changes may be initiated based on operational experience.

Detailed discussion of the LLD and other detection limits can be found in Currie, L.A., "Lower Limit of Detection: Definition and Elaboration of a Proposed Position for Radiological Effluent and Environmental Measurements," NUREG/CR-4007 (September 1984).

TABLE A.9.1-1
RADIOLOGICAL ENVIRONMENTAL MONITORING PROGRAM

Exposure Pathway and/or Sample	Number of Representative Samples and Sample Locations[a]	Sampling and Collection Frequency	Type and Frequency of Analysis
1. DIRECT RADIATION[b]	40 routine monitoring stations with two or more dosimeters placed as follows: An inner ring of stations, one in each meteorological sector in the general area of the SITE BOUNDARY; An outer ring of stations, one in each meteorological sector, generally in the 6 to 8-km range from the site; The balance of the stations to be placed in special interest areas such as population centers, nearby residences, schools, and control locations.	Quarterly.	Gamma dose quarterly.
2. AIRBORNE Radioiodine and Particulates	Samples from five locations[d]: Three samples from close to the three SITE BOUNDARY locations, in different sectors, of high calculated long-term average ground-level D/Q. One sample from the vicinity of a community having the highest calculated long-term average ground-level D/Q.	Continuous sampler operation with sample collection biweekly (approx. 14 days), or more frequently if required by dust loading.	Radioiodine Canister: I-131 analysis biweekly (approx. 14 days). Particulate Sampler: Gross beta radioactivity analysis following filter change[c]; Gamma isotopic analysis[c] of composite (by location) quarterly.

TABLE A.9.1-1
RADIOLOGICAL ENVIRONMENTAL MONITORING PROGRAM
(Continued)

Exposure Pathway and/or Sample	Number of Representative Samples and Sample Locations[a]	Sampling and Collection Frequency	Type and Frequency of Analysis
2. (Continued)	One sample from a control location, as for example 15-30 km distant and in the least prevalent wind direction.		
3. WATERBORNE			
a. Surface	One sample in the discharge area. One sample from a control location.	Monthly grab sample.	Gamma isotopic analysis[e] monthly. Composite for tritium analysis quarterly.
b. Sediment from shoreline	One sample from area with existing or potential recreational value.	Semiannually.	Gamma isotopic analysis[e] semiannually.
4. INGESTION			
a. Milk	Samples from milking animals in three locations within 5 km distance having the highest dose potential. If there are none, then, one sample from milking animals in each of three areas between 5 to 8 km distant where doses are calculated to be greater than 1 mrem per yr.[f] One sample from milking animals at a control location, as for example, 15-30 km distant and in the least prevalent wind direction.	Semimonthly when milking animals are on pasture, monthly at other times.	Gamma isotopic[e] and I-131 analysis on each sample.

TABLE A.9.1-1
RADIOLOGICAL ENVIRONMENTAL MONITORING PROGRAM
(Continued)

Exposure Pathway and/or Sample	Number of Representative Samples and Sample Locations[a]	Sampling and Collection Frequency	Type and Frequency of Analysis
4. (Continued)			
b. Fish and Invertebrates	One sample of each of three commercially and recreationally important species in vicinity of plant discharge area.	Sample in season, or semiannually if they are not seasonal.	Gamma isotopic analysis[e] on edible portions.
	One sample of similar species in areas not influenced by plant discharge.		
c. Food Products	Samples of three (if practical) different kinds of broad leaf vegetation[g] grown nearest each of two different off-site locations of highest predicted long-term average ground-level D/Q if milk sampling is not performed.	Monthly, when available.	Gamma isotopic[e] and I-131 analysis.
	One sample of each of the similar broad leaf vegetation[g] grown at a control location, as for example 15-30 km distant in the least prevalent wind direction, if milk sampling is not performed.	Monthly, when available.	Gamma isotopic[e] and I-131 analysis.

TABLE A.9.1-1
RADIOLOGICAL ENVIRONMENTAL MONITORING PROGRAM
(Continued)

Table Notations

a. Specific parameters of distance and direction sector from the centerline of the Unit 1 reactor, and additional description where pertinent, shall be provided for each and every sample location in Table B.4-1 in the ODCM, Part B. Deviations are permitted from the required sampling schedule if specimens are unobtainable due to circumstances such as hazardous conditions, seasonal unavailability and malfunction of automatic sampling equipment. If specimens are unobtainable due to sampling equipment malfunction, effort shall be made to complete corrective action prior to the end of the next sampling period. All deviations from the sampling schedule shall be documented in the Annual Radiological Environmental Operating Report as specified in Part A, Section 10.1. It is recognized that, at times, it may not be possible or practicable to continue to obtain samples of the media of choice at the most desired location or time. In these instances suitable alternative media and locations may be chosen for the particular pathway in question and appropriate substitutions made within 30 days in the Radiological Environmental Monitoring Program. Identify the cause of the unavailability of samples for that pathway and identify the new location(s), if available, for obtaining replacement samples in the next Semiannual Radioactive Effluent Release Report as specified in Part A, Section 10.2 and also include in the report a revised figure(s) and table for the ODCM reflecting the new location(s).

b. A thermoluminescent dosimeter (TLD) is considered to be one phosphor; two or more phosphors in a packet are considered as two or more dosimeters.

c. Airborne particulate sample filters shall be analyzed for gross beta radioactivity 24 hours or more after sampling to allow for radon and thoron daughter decay. If gross beta activity in air particulate samples is greater than ten times the yearly mean of control samples, gamma isotopic analysis shall be performed on the individual samples.

d. Optimal air sampling locations are based not only on D/Q but on factors such as population in the area, year-round access to the site, and availability of power.

e. Gamma isotopic analysis means the identification and quantification of gamma-emitting radionuclides that may be attributable to the effluents from the facility.

f. The dose shall be calculated for the maximum organ and age group, using the methodology and parameters in the ODCM, Part B.

g. If broad leaf vegetation is unavailable, other vegetation will be sampled.

TABLE A.9.1-2

DETECTION CAPABILITIES FOR ENVIRONMENTAL SAMPLE ANALYSIS[a,f,g]

Lower Limit of Detection (LLD)[b]

Analysis	Water (pCi/kg)	Airborne Particulate or Gas (pCi/kg, wet)	Fish and Invertebrates (pCi/kg, wet)	Milk (pCi/kg)	Food Products (pCi/kg, wet)	Sediment (pCi/kg, dry)
Gross Beta	4	0.01				
H-3	3,000					
Mn-54	15		130			
Fe-59	30		260			
Co-58, 60	15		130			
Zn-65	30		260			
Zr-Nb-95	15[c]					
I-131	15	0.07		1	60[e]	
Cs-134	15	0.05	130	15	60	150
Cs-137	18	0.06	150	18	80	180
Ba-La-140	15[c,d]			15[c,d]		

TABLE A.9.1-2
DETECTION CAPABILITIES FOR ENVIRONMENTAL SAMPLE ANALYSIS
(Continued)

Table Notations

a. This list does not mean that only these nuclides are to be considered. Other peaks that are identifiable, together with those of the above nuclides, shall also be analyzed and reported in the Annual Radiological Environmental Operating Report.

b. The LLD is defined, for purposes of these specifications, as the smallest concentration of radioactive material in a sample that will yield a net count, above system background, that will be detected with 95% probability with only 5% probability of falsely concluding that a blank observation represents a "real" signal.

For a particular measurement system, which may include radiochemical separation:

$$LLD = \frac{4.66\,Sb}{E \times V \times 2.22 \times 10^{6} \times Y \times \exp(-\lambda \Delta t)}$$

Where:

LLD is the "a priori" lower limit of detection as defined above, as picocuries per unit mass or volume;

4.66 is a constant derived from the K_{alpha} and K_{beta} values for the 95% confidence level;

s_b is the standard deviation of the background counting rate or of the counting rate of a blank sample as appropriate, as counts per minute;

E is the counting efficiency, as counts per disintegration;

V is the sample size in units of mass or volume;

2.22 is the number of disintegrations per minute per picocurie;

Y is the fractional radiochemical yield, when applicable;

λ is the radioactive decay constant for the particular radionuclide as per second; and

Δ t for environmental samples is the elapsed time between sample collection and time of counting, as seconds.

Typical values of E, V, Y, and Δ t should be used in the calculation.

In calculating the LLD for a radionuclide determined by gamma ray spectrometry, the background shall include the typical contributions of other radionuclides normally present in the samples (e.g., Potassium-40 in milk samples).

TABLE A.9.1-2
DETECTION CAPABILITIES FOR ENVIRONMENTAL SAMPLE ANALYSIS
(Continued)

Table Notations
(Continued)

It should be recognized that the LLD is defined as an a priori (before the fact) limit representing the capability of a measurement system and not as an a posteriori (after the fact) limit for a particular measurement. This does not preclude the calculation of an a posteriori LLD for a particular measurement based upon the actual parameters for the sample in question and appropriate decay correction parameters such as decay while sampling and during analysis. Analyses shall be performed in such a manner that the stated LLDs will be achieved under routine conditions. Occasionally background fluctuations, unavoidable small sample sizes, the presence of interfering nuclides, or other uncontrollable circumstances may render these LLDs unachievable. In such cases, the contributing factors shall be identified and described in the Annual Radiological Environmental Operating Report per Part A, Section 10.1.

c. Parent only.

d. The Ba-140 LLD and concentration can be determined by the analysis of its short-lived daughter product La-140 subsequent to an eight-day period following collection. The calculation shall be predicated on the normal ingrowth equations for a parent-daughter situation and the assumption that any unsupported La-140 in the sample would have decayed to an insignificant amount (at least 3.6% of its original value). The ingrowth equations will assume that the supported La-140 activity at the time of collection is zero.

e. Broad leaf vegetation only.

f. If the measured concentration minus the three standard deviation uncertainty is found to exceed the specified LLD, the sample does not have to be analyzed to meet the specified LLD.

g. Required detection capabilities for thermoluminescent dosimeters used for environmental measurements shall be in accordance with recommendations of Regulatory Guide 4.13, Revision 1, July 1977.

TABLE A.9.1-3

REPORTING LEVELS FOR RADIOACTIVITY CONCENTRATIONS IN ENVIRONMENTAL SAMPLES

Analysis	Water (pCi/kg)	Airborne Particulate or Gas (pCi/kg, wet)	Fish and Invertebrates (pCi/kg, wet)	Milk (pCi/kg)	Food Products (pCi/kg, wet)
H-3	30,000***				
Mn-54	1,000		30,000		
Fe-59	400		10,000		
Co-58	1,000		30,000		
Co-60	300		10,000		
Zn-65	300		20,000		
Zr-Nb-95	400*				
I-131	100	0.9		3	100**
Cs-134	30	10	1,000	60	1,000
Cs-137	50	20	2,000	70	2,000
Ba-La-140	200*			300*	

* Parent only.

** Broad leaf vegetation only.

***Plant dewatering reporting level = 20,000 pCi/kg (2E-05 μCi/ml)

9.2 Land Use Census

CONTROL

C.9.2.1 A Land Use Census shall be conducted and shall identify within a distance of 8 km (5 miles) the location in each of the 16 meteorological sectors of the nearest milk animal, the nearest residence, and the nearest garden** of greater than 50 m^2 (500 ft^2) producing broad leaf vegetation.

APPLICABILITY: At all times.

ACTION

a. With a Land Use Census identifying a location(s) that yields a calculated dose or dose commitment greater than the values currently being calculated in Surveillance S.7.3.1 pursuant to Technical Specification 6.8.1.4 and Part A, Section 10.2, of the ODCM, identify the new location(s) in the next Annual Radioactive Effluent Release Report.

b. With a Land Use Census identifying a location(s) that yields a calculated dose or dose commitment (via the same exposure pathway) 20% greater than at a location from which samples are currently being obtained in accordance with Control C.9.1.1, add the new location(s) within 30 days to the REMP given in the ODCM, if permission from the owner to collect samples can be obtained and sufficient sample volume is available. The sampling location(s), excluding the Control station location, having the lowest calculated dose or dose commitment(s), via the same exposure pathway, may be deleted from this monitoring program after October 31 of the year in which this Land Use Census was conducted. Pursuant to Technical Specification 6.13 and Part A, Section 10.2 of the ODCM, submit in the next Annual Radioactive Effluent Release Report documentation for a change in the ODCM including a revised figure(s) and table(s) for the ODCM reflecting the new location(s) with information supporting the change in sampling locations.

SURVEILLANCE REQUIREMENTS

S.9.2.1 The Land Use Census shall be conducted during the growing season at least once per 12 months using a method such as by a door-to-door survey, aerial survey, or by consulting local agriculture authorities, as described in the ODCM. The results of the Land Use Census shall be included in the Annual Radiological Environmental Operating Report pursuant to Part A, Section 10.1 of the ODCM.

**Broad leaf vegetation sampling of at least three different kinds of vegetation may be performed at the SITE BOUNDARY in each of two different direction sectors with the highest predicted relative deposition values (D/Qs) in lieu of the garden census. Specifications for broad leaf vegetation sampling in the REMP shall be followed, including analysis of control samples.

This specification is provided to ensure that changes in the use of areas at and beyond the SITE BOUNDARY are identified and that modifications to the REMP given in the ODCM are made if required by the results of this census. Information from methods such as the door-to-door survey, from aerial survey, of from consulting with local agricultural authorities shall be used. This census satisfies the requirements of Section IV.B.3 of Appendix I to 10 CFR Part 50. Restricting the census to gardens of greater than 50 m^2 provides assurance that significant exposure pathways via leafy vegetables will be identified and monitored, since a garden of this size is the minimum required to produce the quantity (26 kg/year) of leafy vegetables assumed in Regulatory Guide 1.109 for consumption by a child. To determine this minimum garden size, the following assumptions were made: (1) 20% of the garden was used for growing broad-leaf vegetation (i.e., similar to lettuce and cabbage), and (2) there was a vegetation yield of 2 kg/m^2.

9.3 Interlaboratory Comparison Program

CONTROL

C.9.3.1 In accordance with Technical Specification 6.7.6h.3, analyses shall be performed on all radioactive materials supplied as part of an Interlaboratory Comparison Program, that has been approved by the Commission, that correspond to samples required by REMP.

APPLICABILITY: At all times.

ACTION:

With analyses not being performed as required above, report the corrective actions taken to prevent a recurrence to the Commission in the Annual Radiological Environmental Operating Report pursuant to Part A, Section 10.1 of the ODCM.

SURVEILLANCE REQUIREMENTS

S.9.3.1 The Interlaboratory Comparison Program shall be identified in Part B of the ODCM. A summary of the results obtained as part of the above required Interlaboratory Comparison Program shall be included in the Annual Radiological Environmental Operating Report pursuant to Part A, Section 10.1 of the ODCM.

BASES

The requirement for participation in an approved Interlaboratory Comparison Program is provided to ensure that independent checks on the precision and accuracy of the measurements of radioactive material in environmental sample matrices are performed as part of the Quality Assurance Program for environmental monitoring in order to demonstrate that the results are valid for the purposes of Section IV.B.2 of Appendix I to 10 CFR Part 50.

10.0 REPORTS

10.1 Annual Radiological Environmental Operating Report

Routine Annual Radiological Environmental Operating Reports covering the operation of the station during the previous calendar year shall be submitted prior to May 1 of each year pursuant to Technical Specification 6.8.1.3.

The Annual Radiological Environmental Operating Reports shall include summaries, interpretations, and an analysis of trends of the results of the radiological environmental Surveillance activities for the report period, including a comparison with preoperational studies, with operational Controls, as appropriate, and with previous environmental Surveillance reports, and an assessment of the observed impacts of the plant operation on the environment. The reports shall also include the results of the Land Use Census required by Control C.9.2.1.

The Annual Radiological Environmental Operating Reports shall include the results of analysis of all radiological environmental samples and of all environmental radiation measurements taken during the period pursuant to the locations specified in the table and figures in Part B of the ODCM, as well as summarized and tabulated results of these analyses and measurements in the format of the table in the Radiological Assessment Branch Technical Position, Revision 1, November 1979. In the event that some individual results are not available for inclusion with the report, the report shall be submitted noting and explaining the reasons for the missing results. The missing data shall be submitted as soon as possible in a supplementary report.

The reports shall also include the following: a summary description of the Radiological Environmental Monitoring Program; at least two legible maps**** covering all sampling locations keyed to a table giving distances and directions from the centerline of one reactor; the results of licensee participation in the Interlaboratory Comparison Program and the corrective action taken if the specified program is not being performed as required by Control C.9.3.1; reason for not conducting the Radiological Environmental Monitoring Program as required by Control C.9.1.1, and discussion of all deviations from the sampling schedule; discussion of environmental sample measurements that exceed the reporting levels but are not the result of plant effluents, pursuant to ACTION b. of Control C.9.1.1; and discussion of all analyses in which the LLD required was not achievable.

****One map shall cover locations near the SITE BOUNDARY; the more distant locations shall be covered by one or more additional maps.

10.2 Annual Radioactive Effluent Release Report

A routine Annual Radioactive Effluent Release Report covering the operation of the station during the previous calendar year of operation shall be submitted by May 1 of each year, pursuant to Technical Specification 6.8.1.4.

The Annual Radioactive Effluent Release Reports shall include a summary of the quantities of radioactive liquid and gaseous effluents and solid waste released from the station as outlined in Regulatory Guide 1.21, "Measuring, Evaluating, and Reporting Radioactivity in Solid Wastes and Releases of Radioactive Materials in Liquid and Gaseous Effluents from Light-Water-Cooled Nuclear Power Plants," Revision 1, June 1974, with data summarized on a quarterly basis following the format of Appendix B thereof. For solid wastes, the format for Table 3 in Appendix B shall be supplemented with three additional categories: class of solid wastes (as defined by 10 CFR Part 61), type of container (e.g., LSA, Type A, Type B, Large Quantity) and SOLIDIFICATION agent or absorbent (e.g., cement).

The Annual Radioactive Effluent Release Report shall include an annual summary of hourly meteorological data collected over the previous year. This annual summary may be either in the form of an hour-by-hour listing on magnetic tape of wind speed, wind direction, atmospheric stability, and precipitation (if measured), or in the form of joint frequency distributions of wind speed, wind direction, and atmospheric stability.***** This same report shall include an assessment of the radiation doses due to the radioactive liquid and gaseous effluents released from the unit or station during the previous calendar year. This same report shall also include an assessment of the radiation doses from radioactive liquid and gaseous effluents to MEMBERS OF THE PUBLIC due to their activities inside the SITE BOUNDARY Technical Specification (Figure 5.1-3) during the report period. All assumptions used in making these assessments, i.e., specific activity, exposure time, and location, shall be included in these reports. The meteorological conditions concurrent with the time of release of radioactive materials in gaseous effluents, as determined by sampling frequency and measurement, shall be used for determining the gaseous pathway doses. The assessment of radiation doses shall be performed in accordance with the methodology and parameters in the OFFSITE DOSE CALCULATION MANUAL (ODCM).

The Annual Radioactive Effluent Release Report shall also include an assessment of radiation doses to the likely most exposed MEMBER OF THE PUBLIC from reactor releases and other nearby uranium fuel cycle sources, including doses from primary effluent pathways and direct radiation, for the previous calendar year to show conformance with 40 CFR Part 190, "Environmental Radiation Protection Standards for Nuclear Power Operation." Acceptable methods for calculating the dose contribution from liquid and gaseous effluents are given in Regulatory Guide 1.109, Rev. 1, October 1977.

*****In lieu of submission with the Annual Radioactive Effluent Release Report, the licensee has the option of retaining this summary of required meteorological data on site in a file that shall be provided to the NRC upon request.

The Annual Radioactive Effluent Release Report shall include a list and description of unplanned releases from the site to UNRESTRICTED AREAS of radioactive materials in gaseous and liquid effluents made during the reporting period.

The Annual Radioactive Effluent Release Report shall include any changes made during the reporting period to the PROCESS CONTROL PROGRAM and the ODCM, pursuant to Technical Specifications 6.12 and 6.13, respectively, as well as any major change to Liquid, Gaseous, or Solid Radwaste Treatment Systems pursuant to Control 11.0. It shall also include a listing of new locations for dose calculations and/or environmental monitoring identified by the Land Use Census pursuant to Control C.9.2.

The Annual Radioactive Effluent Release Report shall also include the following: an explanation as to why the inoperability of liquid or gaseous effluent monitoring instrumentation was not corrected within the time specified in Control C.5.1 or C.5.2, respectively; and description of the events leading to liquid holdup tanks or gas storage tanks exceeding the limits of Technical Specification 3.11.1.4.

SEABROOK STATION ODCM

PART B

RADIOLOGICAL CALCULATIONAL METHODS AND PARAMETERS

1.0 INTRODUCTION

The Offsite Dose Calculation Manual (ODCM) contains details to implement Radioactive Effluent Controls and Environmental Monitoring Program as required by Technical Specifications 6.7.6g and 6.7.6h.

Part B of the ODCM provides formal and approved methods for the calculation of off-site concentration, off-site doses and effluent monitor setpoints, and indicates the locations of environmental monitoring stations in order to comply with the Seabrook Station Radioactive Effluent Controls Program (RECP), and Radiological Environmental Monitoring Program (REMP) detailed in Part A of the manual. The ODCM forms the basis for station procedures which document the off-site doses due to station operation which are used to show compliance with the numerical guides for design objectives of Section II of Appendix I to 10CFR Part 50. The methods contained herein follow accepted NRC guidance, unless otherwise noted in the text.

The references to 10 CFR Part 20 in Part B of the ODCM refer to revisions of 10 CFR Part 20 published prior to 1 January 1993. The decision to continue the use of the "old" version of 10 CFR Part 20 is based on an NRC letter dated June 30, 1993, from Thomas E. Murley to Thomas E. Tipton. For the convenience of the plant staff a copy of 10 CFR Part 20 (Rev. 1, January 1992) has been included in Appendix B.

1.1 Responsibilities for Part B

All changes to the ODCM shall be reviewed by the Station Operation Review Committee (SORC), approved by the Station Director, and documented in accordance with Technical Specification 6.13. The change process is controlled by the Applicability Determination Process as controlled by the 10 CFR 50.59 Resource Manual (5059RM). Changes made to Part B shall be submitted to the Commission for their information in the Annual Radioactive Effluent Release Report for the period in which the change(s) was made effective.

It shall be the responsibility of the Station Director to ensure that the ODCM is used in the performance of surveillance requirements and administrative controls in accordance with Technical Specifications 6.7.6g and 6.7.6h, and Effluent Control Program and Radiological Environmental Monitoring Program detailed in Part A of the manual.

In addition to off-site dose calculations for the demonstration of compliance with Technical Specification dose limits at and beyond the site boundary, 10 CFR 20.1302 requires that compliance with the dose limits for individual members of the public (100 mrem/yr total effective dose equivalent) be demonstrated in controlled areas on-site. Demonstration of compliance with the dose limits to members of the public in controlled areas is implemented per Health Physics Department Procedures, and is outside the scope of the ODCM. However, calculations performed in accordance with the ODCM can be used as one indicator of the need to perform an assessment of exposure to members of the public within the site boundary. Since external direct exposure pathways are already subject to routine exposure rate surveys and measurements, only the inhalation pathway need be assessed. The accumulated critical organ dose at the site boundary, as calculated per ODCM Part B Sections 3.9 and 3.11, can be used as an indicator of when additional assessments of on-site exposure to members of the public is advisable (see Section 3.11.2). Off-site critical organ doses from station effluents should not, however, be the only indicator of potential on-site doses.

1.2 Summary of Methods, Dose Factors, Limits, Constants, Variables and Definitions

This section summarizes the Method I dose equations which are used as the primary means of demonstrating compliance with RECP. The concentration and setpoint methods are identified in Table B.1-2 through Table B.1-7. Appendix C provides documentation for an alternate computerized option, designated as Method IA in the ODCM, for calculating doses necessary to demonstrate compliance with RECP. The Effluent Management System (EMS) software package used for this purpose is provided by Canberra Industries, Inc. Where more refined dose calculations are needed, the use of Method II dose determinations are described in Sections 3.2 through 3.9 and 3.11. The dose factors used in the equations are in Tables B.1-10 through B.1-14 and the Regulatory Limits are summarized in Table B.1-1.

The variables and special definitions used in this ODCM, Part B, are in Tables B.1-8 and B.1-9.

TABLE B.1-1

SUMMARY OF RADIOLOGICAL EFFLUENT PART A CONTROLS AND IMPLEMENTING EQUATIONS

Part A Control		Category	Method I[1]	Limit
C.6.1.1	Liquid Effluent Concentration	Total Fraction of ECL Excluding Noble Gases	Eq. 2-1	≤ 1.0
		Total Noble Gas Concentration	Eq. 2-2	$\leq 2 \times 10^{-4}$ µCi/ml
C.6.2.1	Liquid Effluent Dose	Total Body Dose	Eq. 3-1	≤ 1.5 mrem in a qtr.
				≤ 3.0 mrem in a yr.
		Organ Dose	Eq. 3-2	≤ 5 mrem in a qtr.
				≤ 10 mrem in a yr.
C.6.3.1	Liquid Radwaste Treatment Operability	Total Body Dose	Eq. 3-1	≤ 0.06 mrem in a mo.
		Organ Dose	Eq. 3-2	≤ 0.2 mrem in a mo.
C.7.1.1	Gaseous Effluents Dose Rate	Total Body Dose Rate from Noble Gases	Eq. 3-3	≤ 500 mrem/yr.
		Skin Dose Rate from Noble Gases	Eq. 3-4	≤ 3000 mrem/yr.
		Organ Dose Rate from I-131, I-133, Tritium and Particulates with $T_{1/2} > 8$ Days	Eq. 3-5	≤ 1500 mrem/yr.

TABLE B.1-1
SUMMARY OF RADIOLOGICAL EFFLUENT PART A CONTROLS AND IMPLEMENTING EQUATIONS
(Continued)

Part A Control		Category	Method I[1]	Limit
C.7.2.1	Gaseous Effluents Dose from Noble Gases	Gamma Air Dose from Noble Gases	Eq. 3-6	≤ 5 mrad in a qtr.
				≤ 10 mrad in a yr.
		Beta Air Dose from Noble Gases	Eq. 3-7	≤ 10 mrad in a qtr.
				≤ 20 mrad in a yr.
C.7.3.1	Gaseous Effluents Dose from I-131, I-133, Tritium, and Particulates	Organ Dose from Iodines, Tritium and Particulates with $T_{1/2}$ > 8 Days	Eq. 3-8	≤ 7.5 mrem in a qtr.
				≤ 15 mrem in a yr.
C.7.4.1	Ventilation Exhaust Treatment	Organ Dose	Eq. 3-8	≤ 0.3 mrem in a mo.
C.8.1.1	Total Dose (from All Sources)	Total Body Dose	Footnote (2).	≤ 25 mrem in a yr.
		Organ Dose		≤ 25 mrem in a yr.
		Thyroid Dose		≤ 75 mrem in a yr.
C.5.1	Liquid Effluent Monitor Setpoint			
	Liquid Waste Test Tank Monitor	Alarm Setpoint	Eq. 5-1	Control C.6.1.1

TABLE B.1-1
SUMMARY OF RADIOLOGICAL EFFLUENT PART A CONTROLS AND IMPLEMENTING EQUATIONS
(Continued)

Part A Controls		Category	Method I[1]	Limit
C.5.2	Gaseous Effluent Monitor Setpoint			
	Plant Vent Wide Range Gas Monitors	Alarm/Trip Setpoint For Total Body Dose Rate	Eq. 5-9	Control C.7.1.1a (Total Body)
		Alarm/Trip Setpoint for Skin Dose Rate	Eq. 5-10	Control C.7.1.1a (Skin)

(1) More accurate methods may be available (see subsequent chapters).

(2) Part A Control C.8.1.1a requires this evaluation only if twice the limit of equations 3-1, 3-2, 3-12, 3-15 or 3-18 is reached. If this occurs a Method II calculation, using actual release point parameters with annual average or concurrent meteorology and identified pathways for a real individual, shall be made.

TABLE B.1-2
SUMMARY OF METHOD I EQUATIONS TO CALCULATE
UNRESTRICTED AREA LIQUID CONCENTRATIONS

Equation Number	Category	Equation
2-1	Total Fraction of ECL in Liquids, Except Noble Gases	$F_i^{ENG} = \sum_p \sum_i \frac{C_{pi}}{ECL_i} \leq 10$
2-2	Total Activity of Dissolved and Entrained Noble Gases from all Station Sources	$C_i^{NG}\left(\frac{\mu Ci}{ml}\right) = \sum_i C_i^{NG} \leq 2E\text{-}04$

TABLE B.1-3
SUMMARY OF METHOD I EQUATIONS TO CALCULATE
OFF-SITE DOSES FROM LIQUID RELEASES

Equation Number	Category	Equation
3-1	Total Body Dose	$D_{tb}(\text{mrem}) = k \sum_i Q_i DFL_{itb}$
3-2	Maximum Organ Dose	$D_{mo}(\text{mrem}) = k \sum_i Q_i DFL_{imo}$

TABLE B.1-4
SUMMARY OF METHOD I EQUATIONS TO CALCULATE DOSE RATES

Category	Equation Number	Receptor Location[a]	Release Height[b]	Equation
Total Body Dose Rate From Noble Gases	3-3a	OS	E	$\dot{D}_{tb(e)} = 0.85 * \sum_i (\dot{Q}_i * DFB_i)$
	3-3b	OS	G	$\dot{D}_{tb(g)} = 3.4 * \sum_i (\dot{Q}_i * DFB_i)$
	3-3c	EC	E	$\dot{D}_{tbE(e)} = 0.0015 * \sum_i (\dot{Q}_i * DFB_i)$
	3-3d	EC	G	$\dot{D}_{tbE(g)} = 0.0074 * \sum_i (\dot{Q}_i * DFB_i)$
	3-3e	R	E	$\dot{D}_{tbR(e)} = 0.038 * \sum_i (\dot{Q}_i * DFB_i)$
	3-3f	R	G	$\dot{D}_{tbR(g)} = 0.2 * \sum_i (\dot{Q}_i * DFB_i)$

[a]OS = Off-Site, EC = Science & Nature Center, formerly the Education Center, R = The "Rocks"
[b]E = Elevated, G = Ground

TABLE B.1-4
SUMMARY OF METHOD I EQUATIONS TO CALCULATE DOSE RATES
(Continued)

Category	Equation Number	Receptor Location[a]	Release Height[b]	Equation
Skin Dose Rate From Noble Gases	3-4a	OS	E	$\dot{D}_{skin(e)} = \sum_i (\dot{Q}_i * DF'_{i(e)})$
	3-4b	OS	G	$\dot{D}_{skin(g)} = \sum_i (\dot{Q}_i * DF'_{i(g)})$
	3-4c	EC	E	$\dot{D}_{skinE(e)} = 0.0014 * \sum_i (\dot{Q}_i * DF'_{iE(e)})$
	3-4d	EC	G	$\dot{D}_{skinE(g)} = 0.0014 * \sum_i (\dot{Q}_i * DF'_{iE(g)})$
	3-4e	R	E	$\dot{D}_{skinR(e)} = 0.0076 * \sum_i (\dot{Q}_i * DF'_{iR(e)})$
	3-4f	R	G	$\dot{D}_{skinR(g)} = 0.0076 * \sum_i (\dot{Q}_i * DF'_{iR(g)})$

[a]OS = Off-Site, EC = Science & Nature Center, formerly the Education Center, R = The "Rocks"
[b]E = Elevated, G = Ground

TABLE B.1-4
SUMMARY OF METHOD I EQUATIONS TO CALCULATE DOSE RATES
(Continued)

Category	Equation Number	Receptor Location[a]	Release Height[b]	Equation
Critical Organ Dose Rate From I-131, I-133, H-3, and Particulate With $T_{1/2}$ >8 Days	3-5a	OS	E	$\dot{D}_{co(e)} = \sum_i (\dot{Q}_i * DFG'_{ico(e)})$
	3-5b	OS	G	$\dot{D}_{co(g)} = \sum_i (\dot{Q}_i * DFG'_{ico(g)})$
	3-5c	EC	E	$\dot{D}_{coE(e)} = 0.0014 * \sum_i (\dot{Q}_i * DFG'_{icoE(e)})$
	3-5d	EC	G	$\dot{D}_{coE(g)} = 0.0014 * \sum_i (\dot{Q}_i * DFG'_{icoE(g)})$
	3-5e	R	E	$\dot{D}_{coR(e)} = 0.0076 * \sum_i (\dot{Q}_i * DFG'_{icoR(e)})$
	3-5f	R	G	$\dot{D}_{coR(g)} = 0.0076 * \sum_i (\dot{Q}_i * DFG'_{icoR(g)})$

[a]OS = Off-Site, EC = Science & Nature Center, formerly the Education Center, R = The "Rocks"
[b]E = Elevated, G = Ground

TABLE B.1-5

SUMMARY OF METHOD I EQUATIONS TO CALCULATE DOSES TO AIR FROM NOBLE GASES

Category	Equation Number	Receptor Location[a]	Release Height[b]	Equation
Gamma Dose to Air From Noble Gases	3-6a	OS	E	$D^{\gamma}_{air(e)} = 3.2\,E\text{-}07 * t^{-0.275} * \sum_i (Q_i * DF^{\gamma}_i)$
	3-6b	OS	G	$D^{\gamma}_{air(g)} = 1.6\,E\text{-}06 * t^{-0.293} * \sum_i (Q_i * DF^{\gamma}_i)$
	3-6c	EC	E	$D^{\gamma}_{airE(e)} = 4.9\,E\text{-}10 * t^{-0.252} * \sum_i (Q_i * DF^{\gamma}_i)$
	3-6d	EC	G	$D^{\gamma}_{airE(g)} = 4.4\,E\text{-}09 * t^{-0.321} * \sum_i (Q_i * DF^{\gamma}_i)$
	3-6e	R	E	$D^{\gamma}_{airR(e)} = 5.1\,E\text{-}09 * t^{-0.155} * \sum_i (Q_i * DF^{\gamma}_i)$
	3-6f	R	G	$D^{\gamma}_{airR(g)} = 4.1\,E\text{-}08 * t^{-0.204} * \sum_i (Q_i * DF^{\gamma}_i)$

[a]OS = Off-Site, EC = Science & Nature Center, formerly the Education Center, R = The "Rocks"

[b]E = Elevated, G = Ground

TABLE B.1-5
SUMMARY OF METHOD I EQUATIONS TO CALCULATE DOSES TO AIR FROM NOBLE GASES
(Continued)

Category	Equation Number	Receptor Location[a]	Release Height[b]	Equation
Beta Dose to Air From Noble Gases	3-7a	OS	E	$D^{\beta}_{air(e)} = 4.1\,E\text{-}07 * t^{-0.3} * \sum_i (Q_i * DF_i^{\beta})$
	3-7b	OS	G	$D^{\beta}_{air(g)} = 6.0\,E\text{-}06 * t^{-0.319} * \sum_i (Q_i * DF_i^{\beta})$
	3-7c	EC	E	$D^{\beta}_{airE(e)} = 1.8\,E\text{-}09 * t^{-0.35} * \sum_i (Q_i * DF_i^{\beta})$
	3-7d	EC	G	$D^{\beta}_{airE(g)} = 2.4\,E\text{-}08 * t^{-0.347} * \sum_i (Q_i * DF_i^{\beta})$
	3-7e	R	E	$D^{\beta}_{airR(e)} = 3.9\,E\text{-}08 * t^{-0.249} * \sum_i (Q_i * DF_i^{\beta})$
	3-7f	R	G	$D^{\beta}_{airR(g)} = 4.6\,E\text{-}07 * t^{-0.267} * \sum_i (Q_i * DF_i^{\beta})$

[a]OS = Off-Site, EC = Science & Nature Center, formerly the Education Center, R = The "Rocks"
[b]E = Elevated, G = Ground

TABLE B.1-6
SUMMARY OF METHOD I EQUATIONS TO CALCULATE
DOSE TO AN INDIVIDUAL FROM TRITIUM, IODINE AND PARTICULATES

Category	Equation Number	Receptor Location[a]	Release Height[b]	Equation
Dose to Critical Organ From Iodines, Tritium, and Particulates	3-8a	OS	E	$D_{co(e)} = 14.8 * t^{-0.297} * \Sigma(Q_i * DFG_{ico(e)})$
	3-8b	OS	G	$D_{co(g)} = 17.7 * t^{-0.316} * \Sigma(Q_i * DFG_{ico(g)})$
	3-8c	EC	E	$D_{co\,E(e)} = 3.3\,E\text{-}02 * t^{-0.349} * \Sigma(Q_i * DFG_{ico\,E(e)})$
	3-8d	EC	G	$D_{co\,E(g)} = 3.3\,E\text{-}02 * t^{-0.347} * \Sigma(Q_i * DFG_{ico\,E(g)})$
	3-8e	R	E	$D_{co\,R(e)} = 7.3\,E\text{-}02 * t^{-0.248} * \Sigma(Q_i * DFG_{ico\,R(e)})$
	3-8f	R	G	$D_{co\,R(g)} = 8.6\,E\text{-}02 * t^{-0.267} * \Sigma(Q_i * DFG_{ico\,R(g)})$

[a]OS = Off-Site, EC = Science & Nature Center, formerly the Education Center, R = The "Rocks"
[b]E = Elevated, G = Ground

TABLE B.1-7
SUMMARY OF METHODS FOR
SETPOINT DETERMINATIONS

Equation Number	Category	Equation
5-1	Liquid Effluents: Liquid Waste Test	$R_{setpoint}\left(\frac{\mu Ci}{ml}\right) = f_l \frac{F_d}{F_m X DF_{min_\gamma}} \Sigma C\gamma i$
	Tank Monitor (RM-6509) (1)	
5-23	PCCW Rate-of-Change Alarm	$RC_{set}(gph) = 1x10^{-8} \cdot SWF \cdot \frac{1}{PCC}$
	Gaseous Effluents:	
	Plant Vent Wide Range Gas Monitors (RM-6528-1, 2, 3)	
5-5	Total Body	$R_{tb}(\mu Ci/sec) = 588 \frac{1}{DFB_e} f_v$
5-6	Skin	$R_{skin}(\mu Ci/sec) = 3000 \frac{1}{DE_e'} f_v$

(1) This equation maybe used for other effluent radiation monitors, such as the CPS Rad Monitor (RM-6473) where the fraction of total FCL (f,) is administratively adjusted for the particular pathway.

TABLE B.1-8
SUMMARY OF VARIABLES

Variable		Definition	Units
C_{li}^{NG}	=	Concentration at point of discharge and entrained noble gas "i" in liquid pathways from all station sources	µCi/ml
C_{l}^{NG}	=	Total activity of all dissolved and entrained noble gases in liquid pathways from all station sources	µCi/ml
C_{di}	=	Concentration of radionuclide "i" at the point of liquid discharge	µCi/ml
C_i	=	Concentration of radionuclide "i"	µCi/ml
C_{pi}	=	Concentration, exclusive of noble gases, of radionuclide "i" from tank "p" at point of discharge	µCi/ml
$C_{\gamma i}$	=	Concentration of radionuclide "i" in mixture at the monitor	µCi/ml
$D_{air(e)}^{\beta}$	=	Off-site beta dose to air due to noble gases in elevated release	mrad
$D_{air(g)}^{\beta}$	=	Off-site beta dose to air due to noble gas in ground level release	mrad
$D_{airE(e)}^{\beta}$	=	Beta dose to air at Science & Nature Center due to noble gases in elevated release	mrad
$D_{airE(g)}^{\beta}$	=	Beta dose to air at Science & Nature Center due to noble gases in ground level release	mrad
$D_{airR(e)}^{\beta}$	=	Beta dose to air at "Rocks" due to noble gases in elevated release	mrad
$D_{airR(g)}^{\beta}$	=	Beta dose to air at "Rocks" due to noble gases in ground level release	mrad
$D_{air(e)}^{\gamma}$	=	Off-site gamma dose to air due to noble gases in elevated release	mrad
$D_{air(g)}^{\gamma}$	=	Off-site gamma dose to air due to noble gases in ground level release	mrad
$D_{airE(e)}^{\gamma}$	=	Gamma dose to air at Science & Nature Center due to noble gases in elevated release	mrad
$D_{airE(g)}^{\gamma}$	=	Gamma dose to air at Science & Nature Center due to noble gases in ground level release	mrad
$D_{airR(e)}^{\gamma}$	=	Gamma dose to air at "Rocks" due to noble gases in elevated release	mrad

TABLE B.1-8
SUMMARY OF VARIABLES
(Continued)

Variable		Definition	Units
$D^{\gamma}_{airR(g)}$	=	Gamma dose to air at "Rocks" due to noble gases in ground level release	mrad
$D_{co(e)}$	=	Critical organ dose from an elevated release to an off-site receptor	mrem
$D_{co(g)}$	=	Critical organ dose from a ground level release to an off-site receptor	mrem
$D_{coE(e)}$	=	Critical organ dose from an elevated release to a receptor at the Science & Nature Center	mrem
$D_{coE(g)}$	=	Critical organ dose from a ground level release to a receptor at the Science & Nature Center	mrem
$D_{coR(e)}$	=	Critical organ dose from an elevated release to a receptor at the "Rocks"	mrem
$D_{coR(g)}$	=	Critical organ dose from a ground level release to a receptor at the "Rocks"	mrem
D_d	=	Direct dose	mrem
D^{γ}_{finite}	=	Gamma dose to air, corrected for finite cloud	mrad
D_{mo}	=	Dose to the maximum organ	mrem
D^S	=	Dose to skin from beta and gamma	mrem
D_{tb}	=	Dose to the total body	mrem
DF_{min}	=	Minimum required dilution factor based on all (beta – emitting and gamma – emitting) radionuclides	ratio
$DF_{min\gamma}$	=	Minimum required dilution factor necessary to ensure that the sum of the ratios for the concentration of each gamma-emitting radionuclide to the respective ECL value is not greater than 1 (dimensionless).	
DF'_i	=	Composite skin dose factor for off-site receptor	mrem-sec/μCi-yr
DF'_{iE}	=	Composite skin dose factor for Science & Nature Center	mrem-sec/μCi-yr
DF'_{iR}	=	Composite skin dose factor for the "Rocks"	mrem-sec/μCi-yr
DFB_i	=	Total body gamma dose factor for nuclide "i" (Table B.1-10)	$\frac{mrem^3}{pCi\text{-}yr}$

TABLE B.1-8
SUMMARY OF VARIABLES
(Continued)

Variable		Definition	Units
DFB_c	=	Composite total body dose factor	$\frac{mrem^3}{pCi\text{-}yr}$
DFL_{itb}	=	Site-specific, total body dose factor for a liquid release of nuclide "i" (Table B.1-11)	mrem/μCi1
DFL_{imo}	=	Site-specific, maximum organ dose factor for a liquid release of nuclide "i" (Table B.1-11)	mrem/μCi
$DFB_{ico(e)}$	=	Site-specific, critical organ dose factor for an elevated gaseous release of nuclide "i" (Table B.1-12)	mrem/μCi
$DFG_{ico(g)}$	=	Site-specific critical organ dose factor for a ground level release of nuclide "i" (Table B.1-12)	mrem/μCi
$DFG_{icoE(e)}$	=	Science & Nature Center-specific critical organ dose factor for an elevated release of nuclide "i" (Table B.1-14)	mrem/μCi
$DFG_{icoE(g)}$	=	Science & Nature Center-specific critical organ dose factor for a ground level release of nuclide "i" (Table B.1-14)	mrem/μCi
$DFG_{icoR(e)}$	=	The "Rocks"-specific critical organ dose factor for an elevated release of nuclide "i" (Table B.1-15)	mrem/μCi
$DFG_{icoR(g)}$	=	The "Rocks"-specific critical dose factor for a ground level release of nuclide "i" (Table B.1-15)	mrem/μCi
$DFG'_{ico(e)}$	=	Site-specific critical organ dose rate factor for an elevated gaseous release of nuclide "i" (Table B.1-12)	mrem-sec/μCi-yr
$DFG'_{ico(g)}$	=	Site-specific critical organ dose rate factor for a ground level release of nuclide "i" (Table B.1-12)	mrem-sec/μCi-yr
$DFG'_{icoE(e)}$	=	Science & Nature Center-specific critical organ dose rate factor for an elevated release of nuclide "i" (Table B.1-14)	mrem-sec/μCi-yr
$DFG'_{icoE(g)}$	=	Science & Nature Center-specific critical organ dose rate factor for a ground level release of nuclide "i" (Table B.1-14)	mrem-sec/μCi-yr
$DFG'_{icoR(e)}$	=	The "Rocks"-specific critical organ dose rate factor for an elevated release of nuclide "i" (Table B.1-15)	mrem-sec/μCi-yr
$DFG'_{icoR(g)}$	=	The "Rocks"-specific critical organ dose rate factor for a ground level release of nuclide "i" (Table B.1-15)	mrem-sec/μCi-yr

TABLE B.1-8
SUMMARY OF VARIABLES
(Continued)

Variable		Definition	Units
DFS_i	=	Beta skin dose factor for nuclide "i" (Table B.1-10)	$\frac{\text{mrem-m}^3}{\text{pCi-yr}}$
DF'_i	=	Combined skin dose factor for nuclide "i" (Table B.1-10)	mrem-sec/μCi-yr
DF_i^{γ}	=	Gamma air dose factor for nuclide "i" (Table B.1-10)	$\frac{\text{mrad-m}^3}{\text{pCi-yr}}$
DF_i^{β}	=	Beta air dose factor for nuclide "i" (Table B.1-10)	$\frac{\text{mrad-m}^3}{\text{pCi-yr}}$
$\dot{D}_{co(e)}$	=	Critical organ dose rate to an off-site receptor due to elevated release of iodines, tritium, and particulates	$\frac{\text{mrem}}{\text{yr}}$
$\dot{D}_{co(g)}$	=	Critical organ dose rate to an off-site receptor due to ground level release of iodines, tritium, and particulates	$\frac{\text{mrem}}{\text{yr}}$
$\dot{D}_{coE(e)}$	=	Critical organ dose rate to a receptor at the Science & Nature Center due to an elevated release of iodines, tritium, and particulates	$\frac{\text{mrem}}{\text{yr}}$
$\dot{D}_{coE(g)}$	=	Critical organ dose rate to a receptor at the Science & Nature Center due to a ground level release of iodines, tritium, and particulates	$\frac{\text{mrem}}{\text{yr}}$
$\dot{D}_{coR(e)}$	=	Critical organ dose rate to a receptor at the "Rocks" due to an elevated release of iodines, tritium, and particulates	$\frac{\text{mrem}}{\text{yr}}$
$\dot{D}_{coR(g)}$	=	Critical organ dose rate to a receptor at the "Rocks" due to a ground level release of iodines, tritium, and particulates	$\frac{\text{mrem}}{\text{yr}}$
$\dot{D}_{skin(e)}$	=	Skin dose rate to an off-site receptor due to noble gases in an elevated release	$\frac{\text{mrem}}{\text{yr}}$
$\dot{D}_{skin(g)}$	=	Skin dose rate to an off-site receptor due to noble gases in a ground level release	$\frac{\text{mrem}}{\text{yr}}$
$\dot{D}_{skinE(e)}$	=	Skin dose rate to a receptor at the Science & Nature Center due to noble gases in an elevated release	$\frac{\text{mrem}}{\text{yr}}$
$\dot{D}_{skinE(g)}$	=	Skin dose rate to a receptor at the Science & Nature Center due to noble gases in a ground level release	$\frac{\text{mrem}}{\text{yr}}$

TABLE B.1-8
SUMMARY OF VARIABLES
(Continued)

Variable		Definition	Units
$\dot{D}_{skinR(e)}$	=	Skin dose rate to a receptor at the "Rocks" due to noble gases in an elevated release	$\frac{mrem}{yr}$
$\dot{D}_{skinR(g)}$	=	Skin dose rate to a receptor at the "Rocks" due to noble gases in a ground level release	$\frac{mrem}{yr}$
$\dot{D}_{tb(e)}$	=	Total body dose rate to an off-site receptor due to noble gases in an elevated release	$\frac{mrem}{yr}$
$\dot{D}_{tb(g)}$	=	Total body dose rate to an off-site receptor due to noble gases in a ground level release	$\frac{mrem}{yr}$
$\dot{D}_{tbE(e)}$	=	Total body dose rate to a receptor at the Science & Nature Center due to noble gases in an elevated release	$\frac{mrem}{yr}$
$\dot{D}_{tbE(g)}$	=	Total body dose rate to a receptor at the Science & Nature Center due to noble gases in a ground level release	$\frac{mrem}{yr}$
$\dot{D}_{tbR(e)}$	=	Total body dose rate to a receptor at the "Rocks" due to noble gases in an elevated release	$\frac{mrem}{yr}$
$\dot{D}_{tbR(g)}$	=	Total body dose rate to a receptor at the "Rocks" due to noble gases in a ground level release	$\frac{mrem}{yr}$
D/Q	=	Deposition factor for dry deposition of elemental radioiodines and other particulates	$\frac{1}{m^2}$
ECL_i	=	Effluent concentration limit (ECL) for radionuclide "i" (excluding dissolved and entrained noble gas) as specified in 10 CFR 20, Appendix B, Table 2.	µCi/ml
f_v	=	The fraction of the offsite limiting total body dose rate administratively assigned to the plant vent release	Dimensionless
F_d	=	Actual or estimated flow rate out of discharge tunnel	gpm or ft^3/sec
F_m	=	Flow rate past liquid waste test tank monitor	gpm
F_{max}	=	Maximum allowable discharge flow rate from liquid test tanks based on all (beta – emitting and gamma – emitting) radionuclides	gpm
$F_{max\gamma}$	=	Maximum allowable discharge flow rate from the test tank past the monitor which would equate to the control concentration limit for the gamma radioactivity mixture determined to be in the test tank	gpm

TABLE B.1-8
SUMMARY OF VARIABLES
(Continued)

Variable		Definition	Units
f_g	=	The fraction of the offsite limiting total body dose rate administratively assigned to monitored ground level release	Dimensionless
F	=	Flow rate past plant vent monitor	$\frac{cc}{sec}$
f_{gland}	=	Release reduction factor to be administratively assigned to account for potential unmonitored contributions from the Turbine Gland Seal Exhaust	Dimensionless
$f_1; f_2; f_3; f_4; f_5$	=	Fraction of total ECL associated with Paths 1, 2, 3, 4, and 5, the sum of which is ≤ 1.	Dimensionless
F_I^{ENG}	=	Total fraction of ECL in liquid pathways (excluding noble gases)	Dimensionless
MPC_i	=	Maximum permissible concentration for radionuclide "i" ("old" 10 CFR 20, Appendix B, Table II, Column 2)	µCi/cc
Q_i	=	Release to the environment for radionuclide "i"	curies, or µ curies
$\dot{Q}_i$	=	Release rate to the environment for radionuclide "i"	µCi/sec
$R_{setpoint}$	=	Liquid monitor response for the limiting concentration at the point of discharge	µCi/ml
R_{skin}	=	Response of the noble gas monitor to limiting total body dose rate	cpm, or µCi/sec
R_{tb}	=	Response of the noble gas monitor to limiting total body dose rate	cpm, or µCi/sec
S_F	=	Shielding factor	Dimensionless
S_g	=	Detector counting efficiency from the gas monitor calibration	$\frac{cpm}{\mu Ci\text{-}cc}$ or $\frac{mR/hr}{\mu Ci/cc}$
S_{gi}	=	Detector counting efficiency for noble gas "i"	$\frac{cpm}{\mu Ci\text{-}cc}$ or $\frac{mR/hr}{\mu Ci/cc}$
S_l	=	Detector counting efficiency from the liquid monitor calibration	cps/µCi/ml
S_{li}	=	Detector counting efficiency for radionuclide "i"	cps/µCi/ml
X/Q	=	Average long-term undepleted atmospheric dispersion factor (Tables B.7-4, B.7-5, and B.7-6)	$\frac{sec}{m^3}$

TABLE B.1-8
SUMMARY OF VARIABLES
(Continued)

Variable		Definition	Units
$[X/Q]\gamma$	=	Effective long-term average gamma atmospheric dispersion factor (Tables B.7-4, B.7-5, and B.7-6)	$\frac{sec}{m^3}$
SWF	=	Service Water System flow rate	gph
PCC	=	Primary component cooling water measured (decay corrected) gross radioactivity concentration	µCi/ml
t^{-a}	=	Unitless factor which adjusts the value of atmospheric dispersion factors for elevated or ground-level releases with a total release duration of t hours	Dimensionless

TABLE B.1-9
DEFINITION OF TERMS

Critical Receptor - A hypothetical or real individual whose location and behavior cause him or her to receive a dose greater than any other possible real individual.

Dose - As used in Regulatory Guide 1.109, the term "dose," when applied to individuals, is used instead of the more precise term "dose equivalent," as defined by the International Commission on Radiological Units and Measurements (ICRU). When applied to the evaluation of internal deposition or radioactivity, the term "dose," as used here, includes the prospective dose component arising from retention in the body beyond the period of environmental exposure, i.e., the dose commitment. The dose commitment is evaluated over a period of 50 years. The dose is measured in mrem to tissue or mrad to air.

Dose Rate - The rate for a specific averaging time (i.e., exposure period) of dose accumulation.

Liquid Radwaste Treatment System - The components or subsystems which comprise the available treatment system as shown in Figure B.6-1.

TABLE B.1-10

DOSE FACTORS SPECIFIC FOR SEABROOK STATION FOR NOBLE GAS RELEASES

Radio-nuclide	Gamma Total Body Dose Factor DFB_i $(\frac{mrem-m^3}{pCi-yr})$	Beta Skin Dose Factor DFS_i $(\frac{mrem-m^3}{pCi-yr})$	Combined Skin Dose Factor for Elevated Release Points $DF'_{i(e)}$ $(\frac{mrem-sec}{\mu Ci-yr})$	Combined Skin Dose Factor for Ground Level Release Points $DF'_{i(g)}$ $(\frac{mrem-sec}{\mu Ci-yr})$	Beta Air Dose Factor DF_i^{β} $(\frac{mrad-m^3}{pCi-yr})$	Gamma Air Dose Factor DF_i^{γ} $(\frac{mrad-m^3}{pCi-yr})$
Ar-41	8.84E-03	2.69E-03	1.09E-02	6.20E-02	3.28E-03	9.30E-03
Kr-83m	7.56E-08	-----	1.81E-05	7.28E-05	2.88E-04	1.93E-05
Kr-85m	1.17E-03	1.46E-03	2.35E-03	1.92E-02	1.97E-03	1.23E-03
Kr-85	1.61E-05	1.34E-03	1.11E-03	1.35E-02	1.95E-03	1.72E-05
Kr-87	5.92E-03	9.73E-03	1.38E-02	1.21E-01	1.03E-02	6.17E-03
Kr-88	1.47E-02	2.37E-03	1.62E-02	8.10E-02	2.93E-03	1.52E-02
Kr-89	1.66E-02	1.01E-02	2.45E-02	1.66E-01	1.06E-02	1.73E-02
Kr-90	1.56E-02	7.29E-03	2.13E-02	1.34E-01	7.83E-03	1.63E-02
Xe-131m	9.15E-05	4.76E-04	5.37E-04	5.35E-03	1.11E-03	1.56E-04
Xe-133m	2.51E-04	9.94E-04	1.12E-03	1.12E-02	1.48E-03	3.27E-04
Xe-133	2.94E-04	3.06E-04	5.83E-04	4.39E-03	1.05E-03	3.53E-04
Xe-135m	3.12E-03	7.11E-04	3.74E-03	1.98E-02	7.39E-04	3.36E-03
Xe-135	1.81E-03	1.86E-03	3.33E-03	2.58E-02	2.46E-03	1.92E-03
Xe-137	1.42E-03	1.22E-02	1.14E-02	1.28E-01	1.27E-02	1.51E-03
Xe-138	8.83E-03	4.13E-03	1.20E-02	7.60E-02	4.75E-03	9.21E-03

8.84E-03 = 8.84×10^{-3}

TABLE B.1-11

DOSE FACTORS SPECIFIC FOR SEABROOK STATION

FOR

LIQUID RELEASES

Radionuclide	Total Body Dose Factor DFL_{itb} $(\frac{mrem}{\mu Ci})$	Maximum Organ Dose Factor DFL_{imo} $(\frac{mrem}{\mu Ci})$
H-3	3.02E-13	3.02E-13
Na-24	1.38E-10	1.42E-10
Cr-51	1.83E-11	1.48E-09
Mn-54	5.15E-09	2.68E-08
Fe-55	1.26E-08	7.67E-08
Fe-59	8.74E-08	6.66E-07
Co-58	2.46E-09	1.40E-08
Co-60	6.15E-08	9.22E-08
Zn-65	2.73E-07	5.49E-07
Br-83	1.30E-14	1.89E-14
Rb-86	4.18E-10	6.96E-10
Sr-89	2.17E-10	7.59E-09
Sr-90	3.22E-08	1.31E-07
Nb-95	5.25E-10	1.58E-06
Mo-99	3.72E-11	2.67E-10
Tc-99m	5.22E-13	1.95E-12
Ag-110m	1.01E-08	6.40E-07
Sb-124	1.71E-09	9.89E-09
Sb-125	6.28E-09	8.31E-09
Te-127m	7.07E-08	1.81E-06
Te-127	3.53E-10	9.54E-08
Te-129m	1.54E-07	3.46E-06
Te-129	7.02E-14	1.05E-13
Te-131m	3.16E-08	2.94E-06
Te-132	9.06E-08	3.80E-06
I-130	2.75E-11	3.17E-09
I-131	2.30E-10	1.00E-07
I-132	6.28E-11	6.36E-11
I-133	3.85E-11	1.15E-08
I-134	1.19E-12	1.41E-12
I-135	5.33E-11	4.69E-10
Cs-134	3.24E-08	3.56E-08
Cs-136	2.47E-09	3.27E-09
Cs-137	3.58E-08	4.03E-08
Ba-140	1.70E-10	3.49E-09
La-140	1.07E-10	4.14E-08
Ce-141	3.85E-11	9.31E-09
Ce-144	1.96E-10	6.46E-08
Other*	3.12E-08*	1.58E-06*

* Dose factors to be used in Method I calculation for any "other" detected gamma emitting radionuclide which is not included in the above list.

TABLE B.1-12

DOSE AND DOSE RATE FACTORS SPECIFIC FOR SEABROOK STATION

FOR

IODINES, TRITIUM AND PARTICULATE RELEASES

Radio-nuclide	Critical Organ Dose Factor for Elevated Release Point $DFG_{ico(e)}$ $(\frac{mrem}{\mu Ci})$	Critical Organ Dose Factor for Ground Level Release Point $DFG_{ico(g)}$ $(\frac{mrem}{\mu Ci})$	Critical Organ Dose Rate Factor for Elevated Release Point $DFG'_{ico(e)}$ $(\frac{mrem\text{-}sec}{yr\text{-}\mu Ci})$	Critical Organ Dose Rate Factor for Ground Level Release Point $DFG'_{ico(g)}$ $(\frac{mrem\text{-}sec}{yr\text{-}\mu Ci})$
H-3	3.08E-10	3.76E-09	9.71E-03	1.19E-01
Cr-51	8.28E-09	2.89E-08	2.91E-01	1.01E+00
Mn-54	1.11E-06	3.79E-06	4.38E+01	1.50E+02
Fe-59	1.06E-06	3.65E-06	3.53E+01	1.21E+02
Co-58	5.56E-07	1.91E-06	2.00E+01	6.88E+01
Co-60	1.21E-05	4.12E-05	5.42E+02	1.85E+03
Zn-65	2.33E-06	7.93E-06	7.82E+01	2.66E+02
Sr-89	1.98E-05	6.73E-05	6.24E+02	2.12E+03
Sr-90	7.21E-04	2.47E-03	2.27E+04	7.79E+04
Zr-95	1.10E-06	3.77E-06	3.63E+01	1.24E+02
Nb-95	2.01E-06	6.86E-06	6.40E+01	2.20E+02
Mo-99	1.63E-08	1.10E-07	5.39E-01	3.56E+00
Ru-103	3.03E-06	1.04E-05	9.62E+01	3.31E+02
Ag-110m	5.02E-06	1.72E-05	1.80E+02	6.15E+02
Sb-124	1.83E-06	6.28E-06	6.15E+01	2.11E+02
I-131	1.47E-04	5.04E-04	4.64E+03	1.59E+04
I-133	1.45E-06	5.72E-06	4.57E+01	1.80E+02
Cs-134	5.62E-05	1.91E-04	1.81E+03	6.18E+03
Cs-137	5.47E-05	1.86E-04	1.79E+03	6.09E+03
Ba-140	1.55E-07	6.39E-07	5.01E+00	2.06E+01
Ce-141	2.65E-07	9.28E-07	8.45E+00	2.96E+01
Ce-144	6.09E-06	2.09E-05	1.93E+02	6.62E+02
Other*	4.09E-06	1.39E-05	1.29E+02	4.38E+02

* Dose factors to be used in Method I calculations for any "other" detected gamma emitting radionuclide which is not included in the above list.

TABLE B.1-13

COMBINED SKIN DOSE RATE FACTORS SPECIFIC FOR SEABROOK STATION SPECIAL RECEPTORS[1] FOR NOBLE GAS RELEASE

Radio-nuclide	Science & Nature Center Combined Skin Dose Rate Factor for Elevated Release Point $DF'_{iE(e)}$ $(\frac{mrem\text{-}sec}{\mu Ci\text{-}yr})$	Science & Nature Center Combined Skin Dose Rate Factor for Ground Level Release Point $DF'_{iE(g)}$ $(\frac{mrem\text{-}sec}{\mu Ci\text{-}yr})$	The "Rocks" Combined Skin Dose Rate Factor for Elevated Release Point $DF'_{iR(e)}$ $(\frac{mrem\text{-}sec}{\mu Ci\text{-}yr})$	The "Rocks" Combined Skin Dose Rate Factor for Ground Level Release Point $DF'_{iR(g)}$ $(\frac{mrem\text{-}sec}{\mu Ci\text{-}yr})$
Ar-41	1.57E-02	1.17E-01	9.73E-02	6.99E-01
Kr-83m	2.35E-05	1.13E-04	1.07E-04	5.57E-04
Kr-85m	3.84E-03	4.08E-02	3.16E-02	2.69E-01
Kr-85	2.16E-03	3.09E-02	2.29E-02	2.15E-01
Kr-87	2.31E-02	2.60E-01	2.00E-01	1.73E+00
Kr-88	2.23E-02	1.44E-01	1.25E-01	8.18E-01
Kr-89	3.73E-02	3.34E-01	2.68E-01	2.12E+00
Kr-90	3.15E-02	2.64E-01	2.14E-01	1.64E+00
Xe-131m	9.52E-04	1.19E-02	8.96E-03	8.07E-02
Xe-133m	1.99E-03	2.48E-02	1.87E-02	1.68E-01
Xe-133	9.20E-04	9.11E-03	7.16E-03	5.91E-02
Xe-135m	5.24E-03	3.61E-02	3.07E-02	2.11E-01
Xe-135	5.32E-03	5.41E-02	4.23E-02	3.53E-01
Xe-137	2.14E-02	2.89E-01	2.16E-01	2.00E+00
Xe-138	1.78E-02	1.49E-01	1.21E-01	9.27E-01

[1] See Seabrook Station Technical Specification Figure 5.1-1.

TABLE B.1-14

DOSE AND DOSE RATE FACTORS SPECIFIC FOR THE SCIENCE & NATURE CENTER FOR IODINE, TRITIUM, AND PARTICULATE RELEASES

Radio-nuclide	Critical Organ Dose Factor for Elevated Release Point $DFG_{icoE(e)}$ $(\frac{mrem}{\mu Ci})$	Critical Organ Dose Factor for Ground Level Release Point $DFG_{icoE(g)}$ $(\frac{mrem}{\mu Ci})$	Critical Organ Dose Rate Factor for Elevated Release Point $DFG'_{icoE(e)}$ $(\frac{mrem\text{-}sec}{\mu Ci\text{-}yr})$	Critical Organ Dose Rate Factor for Ground Level Release Point $DFG'_{icoE(g)}$ $(\frac{mrem\text{-}sec}{\mu Ci\text{-}yr})$
H-3	6.45E-11	9.27E-10	2.03E-03	2.92E-02
Cr-51	4.98E-09	2.88E-08	2.12E-01	1.11E+00
Mn-54	1.39E-06	5.71E-06	6.24E+01	2.39E+02
Fe-59	3.09E-07	1.89E-06	1.29E+01	7.16E+01
Co-58	3.89E-07	2.10E-06	1.72E+01	8.26E+01
Co-60	2.17E-05	8.03E-05	9.78E+02	3.63E+03
Zn-65	7.34E-07	3.19E-06	3.31E+01	1.33E+02
Sr-89	1.15E-07	1.61E-06	3.63E+00	5.08E+01
Sr-90	5.14E-06	7.19E-05	1.62E+02	2.27E+03
Zr-95	3.38E-07	2.57E-06	1.35E+01	9.15E+01
Nb-95	1.53E-07	9.35E-07	6.43E+00	3.53E+01
Mo-99	1.62E-08	1.92E-07	5.58E-01	6.21E+00
Ru-103	1.30E-07	8.64E-07	5.33E+00	3.19E+01
Ag-110m	3.43E-06	1.54E-05	1.55E+02	6.34E+02
Sb-124	6.96E-07	4.46E-06	2.89E+01	1.67E+02
I-131	7.79E-07	1.08E-05	2.47E+01	3.41E+02
I-133	1.84E-07	2.56E-06	5.83E+00	8.11E+01
Cs-134	6.83E-06	2.53E-05	3.08E+02	1.14E+03
Cs-137	1.03E-05	3.81E-05	4.64E+02	1.72E+03
Ba-140	1.14E-07	1.42E-06	3.85E+00	4.54E+01
Ce-141	4.09E-08	4.51E-07	1.45E+00	1.48E+01
Ce-144	6.95E-07	9.11E-06	2.27E+01	2.90E+02
Other*	2.26E-06	9.24E-06	1.02E+02	3.91E+02

* Dose factors to be used in Method I calculations for any "other" detected gamma emitting radionuclide which is not included in the above list.

TABLE B.1-15

DOSE AND DOSE RATE FACTORS SPECIFIC FOR THE "ROCKS" FOR IODINE, TRITIUM, AND PARTICULATE RELEASES

Radio-nuclide	Critical Organ Dose Factor for Elevated Release Point $DFG_{icoR(e)}$ $(\frac{mrem}{\mu Ci})$	Critical Organ Dose Factor for Ground Level Release Point $DFG_{icoR(g)}$ $(\frac{mrem}{\mu Ci})$	Critical Organ Dose Rate Factor for Elevated Release Point $DFG'_{icoR(e)}$ $(\frac{mrem\text{-}sec}{\mu Ci\text{-}yr})$	Critical Organ Dose Rate Factor for Ground Level Release Point $DFG'_{icoR(g)}$ $(\frac{mrem\text{-}sec}{\mu Ci\text{-}yr})$
H-3	6.85E-10	6.45E-09	2.16E-02	2.03E-01
Cr-51	2.68E-08	1.75E-07	1.07E+00	6.53E+00
Mn-54	5.84E-06	3.18E-05	2.55E+02	1.31E+03
Fe-59	1.74E-06	1.17E-05	6.78E+01	4.29E+02
Co-58	2.01E-06	1.25E-05	8.11E+01	4.79E+02
Co-60	8.83E-05	4.09E-04	3.97E+03	1.85E+04
Zn-65	3.23E-06	1.80E-05	1.37E+02	7.29E+02
Sr-89	1.23E-06	1.15E-05	3.88E+01	3.63E+02
Sr-90	5.48E-05	5.14E-04	1.73E+03	1.62E+04
Zr-95	2.22E-06	1.68E-05	8.14E+01	5.83E+02
Nb-95	8.59E-07	5.79E-06	3.37E+01	2.13E+02
Mo-99	1.50E-07	1.34E-06	4.92E+00	4.32E+01
Ru-103	7.74E-07	5.47E-06	2.95E+01	1.96E+02
Ag-110m	1.54E-05	8.77E-05	6.47E+02	3.53E+03
Sb-124	4.04E-06	2.80E-05	1.56E+02	1.01E+03
I-131	8.27E-06	7.73E-05	2.61E+02	2.44E+03
I-133	1.95E-06	1.83E-05	6.18E+01	5.77E+02
Cs-134	2.78E-05	1.29E-04	1.25E+03	5.80E+03
Cs-137	4.19E-05	1.94E-04	1.89E+03	8.77E+03
Ba-140	1.10E-06	9.99E-06	3.56E+01	3.19E+02
Ce-141	3.59E-07	3.14E-06	1.20E+01	1.02E+02
Ce-144	7.02E-06	6.46E-05	2.25E+02	2.05E+03
Other*	9.56E-06	5.09E-05	4.16E+02	2.12E+03

* Dose factors to be used in Method I calculations for any "other" detected gamma emitting radionuclide which is not included in the above list.

2.0 METHOD TO CALCULATE OFF-SITE LIQUID CONCENTRATIONS

Chapter 2 contains the basis for station procedures used to demonstrate compliance with ODCM Part A Control C.6.1.1, which limits the total fraction of ECL in liquid pathways, other than noble gases (denoted here as F_1^{ENG}) at the point of discharge from the station to the environment (see Figure B.6-1).

F_1^{ENG} is limited to less than or equal to one, i.e.,

$$F_1^{ENG} \leq 1.$$

The total concentration of all dissolved and entrained noble gases at the point of discharge from the multiport diffuser from all station sources combined, denoted C_1^{NG}, is limited to 2E-04 μCi/ml, i.e.,

$C_1^{NG} \leq$ 2E-04 μCi/ml.

Appendix C, Attachments 3 and 4, provide the option and bases for the use of the EMS determination of liquid concentration limits for plant discharges to the environment.

2.1 Method to Determine F_1^{ENG} AND C_1^{NG}

First, determine the total fraction of ECL (excluding noble gases), at the point of discharge from the station from all significant liquid sources denoted F_1^{ENG}; and then separately determine the total concentration at the point of discharge of all dissolved and entrained noble gases from all station sources, denoted C_1^{NG}, as follows:

$$F_1^{ENG} = \sum_p \sum_i \frac{C_{pi}}{ECL_i} \leq 10 \qquad (2\text{-}1)$$

$$\left(\frac{\mu Ci/ml}{\mu Ci/ml}\right)$$

and:

$$C_1^{NG} = \sum_i C_{1i}^{NG} \leq 2E-04 \qquad (2\text{-}2)$$

(μCi/ml) (μCi/ml) (μCi/ml)

where:

F_1^{ENG} = Total fraction of ECL in liquids, excluding noble gases, at the point of discharge from the multiport difuser.

C_{pi} = Concentration at point of discharge from the multiport diffuser of radionuclide "i", except for dissolved and entrained noble gases, from all tanks and other significant sources, p, from which a discharge may be made (including the waste test tanks and any other significant source from which a discharge can be made). C_{pi} is determined by dividing the product of the measured radionuclide concentration in liquid waste test tanks, PCCW, steam generator blowdown, or other effluent streams times their discharge flow rate by the total available dilution water flow rate of circulating and service water at the time of release (μCi/ml).

ECL_i = Effluent concentration limit (ECL) for radionuclide "i" (except for dissolved and entrained noble gases) in μCi/ml as specified in 10 CFR 20, Appendix B, Table 2. See Appendix B for a list of ECL values.

C_I^{NG} = Total concentration at point of discharge of all dissolved and entrained noble gases in liquids from all station sources (μCi/ml)

C_{Ii}^{NG} = Concentration at point of discharge of dissolved and entrained noble gas "i" in liquids from all station sources (μCi/ml)

2.2 Method to Determine Radionuclide Concentration for Each Liquid Effluent Source

2.2.1 Waste Test Tanks

C_{pi} is determined for each radionuclide detected from the activity in a representative grab sample of any of the waste test tanks and the predicted flow at the point of discharge.

The batch releases are normally made from two 25,000-gallon capacity waste test tanks. These tanks normally hold liquid waste which may have been processed through the installed vendor equipment. The waste test tanks can also contain other waste such as liquid taken directly from the floor drain/chemical drain treatment tanks when that liquid does not require processing in the evaporator, from the installed vendor resin skid, distillate from the boron recovery evaporator when the BRS evaporator is substituting for the waste evaporator, or waste distillate from the Steam Generator Blowdown System when that system must discharge liquid off site.

If testing indicates that purification of the waste test tank contents is required prior to release, the liquid can be circulated through the waste demineralizer and filter.

The contents of the waste test tank may be reused in the Nuclear System if the sample test meets the purity requirements.

Prior to discharge, each waste test tank is analyzed for principal gamma emitters in accordance with the liquid sample and analysis program outlined in Part A to the ODCM.

2.2.2 Turbine Building Sump

The Turbine Building sump collects leakage from the Turbine Building floor drains and discharges the liquid unprocessed to the circulating water system.

Sampling of this potential source is normally done once per week for determining the radioactivity released to the environment (see Table A.6.1-1).

2.2.3 Steam Generator Blowdown Flash Tank

The primary method to process radioactive secondary liquid from the steam generators is to direct steam blowdown flash tank bottoms cooler discharge to the floor drain tanks. If no secondary pressure is available, the steam blowdown and wet lay-ups pumps can be used. From the floor drain tanks, processing through the installed vendor resin skid (WL-SKD-135) to the waste test tanks is the preferred method. Other methods may be used as defined below.

The steam generator blowdown evaporators may process the liquid from the steam generator blowdown flash tank when there is primary to secondary leakage. Distillate from the evaporators can be sent to the waste test tanks or recycled to the condensate system. When there is no primary to secondary leakage, flash tank liquid is processed through the steam generator blowdown demineralizers and returned to the secondary side.

Steam generator blowdown is only subject to sampling and analysis when all or part of the blowdown liquid is being discharged to the environment instead of the normal recycling process (see Table A.6.1-1).

2.2.4 Primary Component Cooling Water (PCCW) System

The PCCW System is used to cool selected primary components.

The system is normally sampled weekly to determine if there is any radwaste in-leakage. If leakage has been determined, the Service Water System is sampled to determine if any release to the environment has occurred.

2.2.5 Water Treatment System (Condensate Polishing System)

The addition to the plant design of a Condensate Polishing System (CPS) for secondary side water treatment creates the potential for radiological contaminated effluents to be discharge from the Mixed Bed or Cation Demineralizers (during Megarinse) and from the Neutralization Tank (1-WT-TK-32) and the Low Conductivity Tank (1-CPS-TK-274) to the Circulating Water System via the Water Treatment System Piping following regeneration of the resin beds.

Prior to discharge, each tank or vessel to be processed is sampled and analyzed for principal gamma emitters in accordance with the Liquid Sample and Analysis Program outlined in Part A to the ODCM.

3.0 OFF-SITE DOSE CALCULATION METHODS

Chapter 3 provides the basis for station procedures required to meet the Radiological Effluent Control Program (RECP) dose and dose rate requirements contained in ODCM Part A Controls. A simple, conservative method (called Method I) is listed in Tables B.1-2 to B.1-7 for each of the requirements of the RECP. Each of the Method I equations is presented in Part B, Sections 3.2 through 3.9. As an alternate to Method I, the EMS computer program documented in Appendix C can be used to determine regulatory compliance for effluent doses and dose rates. The use of the EMS software is designated as Method IA in Chapter 3. In addition, those sections include more sophisticated methods (called Method II) for use when more refined results are needed. This chapter provides the methods, data, and reference material with which the operator can calculate the needed doses, dose rates and setpoints. For the requirements to demonstrate compliance with Part A off-site dose limits, the contribution from all measured ground level releases must be added to the calculated contribution from the vent stack to determine the Station's total radiological impact. The bases for the dose and dose rate equations are given in Chapter 7.0. Method IA bases and software verification documentation are contained in Appendix C.

The Annual Radioactive Effluent Release Report, to be filed after January 1 each year per Technical Specification 6.8.1.4, and Part A, Section 10.2, requires that meteorological conditions concurrent with the time of release of radioactive materials in gaseous effluents, as determined by sampling frequency and measurement, be used for determining the gaseous pathway doses. For continuous release sources (i.e., plant vent, condenser air removal exhaust, and gland steam packing exhauster), concurrent quarterly average meteorology will be used in the dose calculations along with the quarterly total radioactivity released. For batch releases or identifiable operational activities (i.e., containment purge or venting to atmosphere of the Waste Gas System), concurrent meteorology during the period of release will be used to determine dose if the total noble gas or iodine and particulates released in the batch exceeds five percent of the total quarterly radioactivity released from the unit; otherwise quarterly average meteorology will be applied. Quarterly average meteorology will also be applied to batch releases if the hourly met data for the period of batch release is unavailable.

Annual dose assessment reports prepared in accordance with the requirements of the ODCM will include a statement indicating that the appropriate portions of Regulatory Guide 1.109 (as identified in the individual subsections of the ODCM for each class of effluent exposure) have been used to determine dose impact from station releases. Any deviation from the methodology, assumptions, or parameters given in Regulatory Guide 1.109, and not already identified in the bases of the ODCM, will be explicitly described in the effluent report, along with the bases for the deviation.

3.1 Introductory Concepts

In Part A Controls, the RECP limits for dose or dose rate are stated. The term "dose" for ingested or inhaled radioactivity means the dose commitment, measured in mrem, which results from the exposure to radioactive materials that, because of uptake and deposition in the body, will continue to expose the body to radiation for some period of time after the source of radioactivity is stopped. The time frame over which the dose commitment is evaluated is 50 years. The phrases "annual dose" or "dose in one year" then refers to the 50-year dose commitment resulting from exposure to one year's worth of releases. "Dose in a quarter" similarly means the 50-year dose commitment resulting from exposure to one quarter's releases. The term "dose," with respect to external exposures, such as to noble gas clouds, refers only to the doses received during the actual time period of exposure to the radioactivity released from the plant. Once the source of the radioactivity is removed, there is no longer any additional accumulation to the dose commitment.

"Dose rate" is the total dose or dose commitment divided by exposure period. For example, an individual who is exposed via the ingestion of milk for one year to radioactivity from plant gaseous effluents and receives a 50-year dose commitment of 10 mrem is said to have been exposed to a dose rate of 10 mrem/year, even though the actual dose received in the year of exposure may be less than 10 mrem.

In addition to limits on dose commitment, gaseous effluents from the station are also controlled so that the maximum or peak dose rates at the site boundary at any time are limited to the equivalent annual dose limits of 10 CFR Part 20 to unrestricted areas (if it were assumed that the peak dose rates continued for one year). These dose rate limits provide reasonable assurance that members of the public, either inside or outside the site boundary, will not be exposed to annual averaged concentrations exceeding the limits specified in Appendix B, Table 2 of 10 CFR Part 20. See Appendix B for a listing of these concentration limits.

The quantities ΔD and $\dot{D}$ are introduced to provide calculable quantities, related to off-site doses or dose rates that demonstrate compliance with the RETS.

Delta D, denoted ΔD, is the quantity calculated by the Part B, Chapter 3, Method I dose equations. It represents the conservative increment in dose. The ΔD calculated by Method I equations is not necessarily the actual dose received by a real individual, but usually provides an upper bound for a given release because of the conservative margin built into the dose factors and the selection and definition of critical receptors. The radionuclide specific dose factors in each Method I dose equation represent the greatest dose to any organ of any age group. (Organ dose is a function of age because organ mass and intake are functions of age.) The critical receptor assumed by "Method I" equations is then generally a hypothetical individual whose behavior - in terms of location and intake - results in a dose which is higher than any real individual is likely to receive. Method IA dose calculations using the EMS software evaluate each age group and organ combination to determine the maximum organ dose for each mix of radionuclides specified in a release period. Method II also allows for a more exact dose calculation for each individual if necessary.

D dot, denoted $\dot{D}$, is the quantity calculated in the Part B, Chapter 3 dose rate equations. It is calculated using the station's effluent monitoring system reading and an annual or long-term average atmospheric dispersion factor. $\dot{D}$ predicts the maximum off-site annual dose if the peak observed radioactivity release rate from the plant stack continued for one entire year. Since peak release rates, or resulting dose rates, are usually of short time duration on the order of an hour or less, this approach then provides assurance that 10 CFR 20.106 limits will be met.

Each of the methods to calculate dose or dose rate is presented in the following subsections. Each dose type has two levels of complexity. Method I is the simplest and contains many conservative factors. As an alternate to Method I the EMS computer program documented in Appendix C can be used to determine regulatory compliance for effluent doses and dose rates. The use of the EMS system is designated as Method IA in Chapter 3 of Part B.

Method II is a more realistic analysis which makes use of the models in Regulatory Guide 1.109 (Revision 1), as noted in each subsection of Part B, Chapter 3 for the various exposure types. A detailed description of the methodology, assumptions, and input parameters to the dose models that are applied in each Method II calculation, if not already explicitly described in the ODCM, shall be documented and provided when this option is used for NRC reporting and ODCM, Part A RECP dose compliance.

3.2 Method to Calculate the Total Body Dose from Liquid Releases

Part A Control C.6.2.1 limits the total body dose commitment to a member of the public from radioactive material in liquid effluents to 1.5 mrem per quarter and 3 mrem per year per unit. Part A Control C.6.3.1 requires liquid radwaste treatment when the total body dose estimate exceeds 0.06 mrem in any 31-day period. Part A Control C.8.1.1 limits the total body dose commitment to any real member of the public from all station sources (including liquids) to 25 mrem in a year.

Use Method I or Method IA first to calculate the maximum total body dose from a liquid release from the station as it is simpler to execute and more conservative than Method II.

Use Method II if a more refined calculation of total body dose is needed, i.e., Method I or Method IA indicates the dose might be greater than Part A Control limits.

To evaluate the total body dose, use Equation 3-1 to estimate the dose from the planned release and add this to the total body dose accumulated from prior releases during the month. See Part B, Section 7.1.1 for basis.

3.2.1 Method I

The total body dose from a liquid release is:

$$D_{tb} = k \sum_i Q_i \; DFL_{itb} \qquad (3\text{-}1)$$

$$(\text{mrem}) = (\;)\;(\mu Ci)\left(\frac{\text{mrem}}{\mu\text{Ci}}\right)$$

where

DFL_{itb} = Site-specific total body dose factor (mrem/μCi) for a liquid release. It is the highest of the four age groups. See Table B.1-11.

Q_i = Total activity (μCi) released for radionuclide "i". (For strontiums, use the most recent measurement available.)

k = $918/F_d$; where F_d is the average (typically monthly average) dilution flow of the Circulating Water System at the point of discharge from the multiport diffuser (in ft^3/sec). For normal operations with a cooling water flow of 918 ft^3/sec, k is equal to 1. During periods when no or low flow is recorded from the Discharge Transition Structure (DTS), a minimum dilution flow of 23 ft^3/sec (10,500 gpm for one service water pump) can be used since this would be the minimum flow available when discharges to the tunnel are reestablished. Alternately, the monthly average discharge flow for the period in which the release occurs can be used when this value is available.

3.2 Method to Calculate the Total Body Dose from Liquid Releases

3.2.1 Method I (Continued)

Equation 3-1 can be applied under the following conditions (otherwise, justify Method I or consider Method II):

1. Liquid releases via the multiport diffuser to unrestricted areas (at the edge of the initial mixing or prompt dilution zone that corresponds to a factor of 10 dilution), and

2. Any continuous or batch release over any time period up to 1 year. For annual dose estimates, the annual average discharge flow from the DTS should be used as the dilution flow estimate.

Method IA is implemented by the EMS software as described in Appendix C. Liquid release models are detailed in sections 2.1 - 2.6 of the EMS Technical Reference Manual (Attachment 4 of Appendix C).

3.2.2 Method II

Method II consists of the models, input data and assumptions (bioaccumulation factors, shore-width factor, dose conversion factors, and transport and buildup times) in Regulatory Guide 1.109, Rev. 1 (Reference A), except where site-specific data or assumptions have been identified in the ODCM. The general equations (A-3 and A-7) taken from Regulatory Guide 1.109, and used in the derivation of the simplified Method I approach as described in the Bases section, are also applied to Method II assessments, except that doses calculated to the whole body from radioactive effluents are evaluated for each of the four age groups to determine the maximum whole body dose of an age-dependent individual via all existing exposure pathways. Table B.7-1 lists the usage factors of Method II calculations. As noted in Section B.7.1, the mixing ratio associated with the edge of the 1°F surface isotherm above the multiport diffuser may be used in Method II calculations for the shoreline exposure pathway (Mp = 0.025). Aquatic food ingestion pathways shall limit credit taken for mixing zone dilution to the same value assumed in Method I ($M_p = 0.10$).

3.3 Method to Calculate Maximum Organ Dose from Liquid Releases

Part A Control C.6.2.1 limits the maximum organ dose commitment to a Member of the Public from radioactive material in liquid effluents to 5 mrem per quarter and 10 mrem per year per unit. Part A Control C.6.3.1 requires liquid radwaste treatment when the maximum organ dose projected exceeds 0.2 mrem in any 31 days (see Part B, Subsection 3.11 for dose projections). Part A Control C.8.1.1 limits the maximum organ dose commitment to any real member of the public from all station sources (including liquids) to 25 mrem in a year except for the thyroid, which is limited to 75 mrem in a year.

Use Method I or Method IA first to calculate the maximum organ dose from a liquid release to unrestricted areas (see Figure B.6-1) as it is simpler to execute and more conservative than Method II.

Use Method II if a more refined calculation of organ dose is needed, i.e., Method I or Method IA indicates the dose may be greater than the limit.

Use Equation 3-2 to estimate the maximum organ dose from individual or combined liquid releases. See Part B, Section 7.1.2 for basis.

3.3.1 Method I

The maximum organ dose from a liquid release is:

$$D_{mo} = k \sum_i Q_i \; DFL_{imo} \qquad (3\text{-}2)$$

$$(\text{mrem}) = (\;)\;(\mu\text{Ci})\left(\frac{\text{mrem}}{\mu\text{Ci}}\right)$$

where

DFL_{imo} = Site-specific maximum organ dose factor (mrem/μCi) for a liquid release. It is the highest of the four age groups. See Table B.1-11.

Q_i = Total activity (μCi) released for radionuclide "i". (For composited analyses of strontiums, use the most recent measurement available.)

k = $918/F_d$; where F_d is the average (typically monthly average) dilution flow of the Circulating Water System at the point of discharge from the multiport diffuser (in ft^3/sec). For normal operations with a cooling water flow of 918 ft^3/sec, k is equal to 1. During periods when no or low flow is recorded from the Discharge Transition Structure (DTS), a minimum dilution flow of 23 ft^3/sec (10,500 gpm for one service water pump) can be used since this would be the minimum flow available when discharges to the tunnel are reestablished. Alternately, the monthly average discharge flow for the period in which the release occurs can be used when this value is available.

3.3 Method to Calculate Maximum Organ Dose from Liquid Releases

3.3.1 Method I (Continued)

Equation 3-2 can be applied under the following conditions (otherwise, justify Method I or consider Method II):

1. Liquid releases via the multiport diffuser to unrestricted areas (at the edge of the initial mixing or prompt dilution zone that corresponds to a factor of 10 dilution), and

2. Any continuous or batch release over any time period up to 1 year. For annual dose estimates, the annual average discharge flow from the DTS should be used as the dilution flow estimate.

Method IA is implemented by the EMS software as described in Appendix C. Liquid release models are detailed in sections 2.1 - 2.6 of the EMS Technical Reference Manual (Attachment 4 of Appendix C).

3.3.2 Method II

Method II consists of the models, input data and assumptions (bioaccumulation factors, shore-width factor, dose conversion factors, and transport and buildup times) in Regulatory Guide 1.109, Rev. 1 (Reference A), except where site-specific data or assumptions have been identified in the ODCM. The general equations (A-3 and A-7) taken from Regulatory Guide 1.109, and used in the derivation of the simplified Method I approach as described in the Bases section, are also applied to Method II assessments, except that doses calculated to critical organs from radioactive effluents are evaluated for each of the four age groups to determine the maximum critical organ of an age-dependent individual via all existing exposure pathways. Table B.7-1 lists the usage factors for Method II calculations. As noted in Section B.7.1, the mixing ratio associated with the edge of the 1°F surface isotherm above the multiport diffuser may be used in Method II calculations for the shoreline exposure pathway (Mp = 0.025). Aquatic food ingestion pathways shall limit credit taken for mixing zone dilution to the same value assumed in Method I ($M_p = 0.10$).

3.4 Method to Calculate the Total Body Dose Rate from Noble Gases

Part A Control C.7.1.1 limits the dose rate at any time to the total body from noble gases at any location at or beyond the site boundary to 500 mrem/year. The Part A Control indirectly limits peak release rates by limiting the dose rate that is predicted from continued release at the peak rate. By limiting $\dot{D}_{tb}$ to a rate equivalent to no more than 500 mrem/year, we assure that the total body dose accrued in any one year by any member of the general public is less than 500 mrem.

Use Method I or Method IA first to calculate the Total Body Dose Rate from the peak release rate via the station vents or ground level effluent release points. Method I applies at all release rates.

Use Method II if a more refined calculation of $\dot{D}_{tb}$ is desired by the station (i.e., use of actual release point parameters with annual or actual meteorology to obtain release-specific X/Qs) or if Method I or Method IA predicts a dose rate greater than the Part A Control limit to determine if it had actually been exceeded during a short time interval. See Part B, Section 7.2.1 for basis.

Compliance with the dose rate limits for noble gases are continuously demonstrated when effluent release rates are below the plant vent noble gas activity monitor alarm setpoint by virtue of the fact that the alarm setpoint is based on a value which corresponds to the off-site dose rate limit, or a value below it. Determinations of dose rate for compliance with Part A Control are performed when the effluent monitor alarm setpoint is exceeded, or as required by the Action Statement (Part A Control C.5.2, Table A.5.2-1) when the monitor is inoperable.

3.4.1 Method I

The Total Body Dose Rate to an off-site receptor due to noble gases in effluents released via the plant vent can be determined as follows:

$$\dot{D}_{tb(e)} = 0.85 * \sum_i \left(\dot{Q}_i \cdot DFB_i \right) \qquad (3\text{-}3a)$$

$$\frac{mrem}{yr} = \left(\frac{pCi - sec}{\mu Ci - m^3} \right) \sum \left(\frac{\mu Ci}{sec} \right) \left(\frac{mrem - m^3}{pCi - yr} \right)$$

where

$\dot{D}_{tb(e)}$ = The off-site total body dose rate (mrem/yr) due to noble gases in elevated effluent releases,

$\dot{Q}_i$ = the release rate at the station vents (μCi/sec), for each noble gas radionuclide, "i", shown in Table B.1-10, and

DFB_i = total body gamma dose factor (see Table B.1-10).

The Total Body Dose Rate (to an off-site receptor) due to noble gas in ground level effluent releases can be determined as follows:

3.4 Method to Calculate the Total Body Dose Rate from Noble Gases

3.4.1 Method I (Continued)

$$\dot{D}_{tb(g)} = 3.4 * \sum_i (\dot{Q}_i * DFB_i) \qquad (3\text{-}3b)$$

$$\frac{\text{mrem}}{\text{yr}} = \left(\frac{\text{pCi - sec}}{\mu\text{Ci} - \text{m}^3}\right) \sum \left(\frac{\mu\text{Ci}}{\text{sec}}\right) \left(\frac{\text{mrem - m}^3}{\text{pCi - yr}}\right)$$

where

$\dot{D}_{tb(g)}$ = The total off-site body dose rate (mrem/yr) due to noble gases in ground level equivalent effluent releases, and

$\dot{Q}_i$ and DFB_i are as defined for Equation 3-3a.

For the special on-site receptor locations, the Science & Nature Center and the "Rocks," the total body dose rates due to noble gases in effluent discharges can be determined as follows:

For the Science & Nature Center, elevated effluent release:

$$\dot{D}_{tbE(e)} = 0.0015 * \sum_i (\dot{Q}_i * DFB_i) \qquad (3\text{-}3c)$$

For the Science & Nature Center, ground level effluent release:

$$\dot{D}_{tbE(g)} = 0.0074 * \sum_i (\dot{Q}_i * DFB_i) \qquad (3\text{-}3d)$$

For the "Rocks," elevated effluent release:

$$\dot{D}_{tbR(e)} = 0.038 * \sum_i (\dot{Q}_i * DFB_i) \qquad (3\text{-}3e)$$

For the "Rocks," ground level effluent release:

$$\dot{D}_{tbR(g)} = 0.2 * \sum_i (\dot{Q}_i * DFB_i) \qquad (3\text{-}3f)$$

where

$\dot{D}_{tbE(e)}$, $\dot{D}_{tbE(g)}$, $\dot{D}_{tbR(e)}$, and $\dot{D}_{tbR(g)}$ = The total body dose rate (mrem/yr) at the Science & Nature Center and the "Rocks," respectively, due to noble gases in gaseous discharges from elevated (e) and ground level (g) release points, and

$\dot{Q}_i$ and DFB_i are as defined previously.

Equations 3-3a through 3-3f can be applied under the following conditions (otherwise, justify Method I or consider Method II):

1. Normal operations (nonemergency event), and

2. Noble gas releases via any station vent to the atmosphere.

Method IA is implemented by the EMS software as described in Appendix C. Gaseous release models are detailed in Section 6.7.3 of the EMS Software Requirements Specification (Attachment 3 of Appendix C).

3.4.2 Method II

Method II consists of the model and input data (whole body dose factors) in Regulatory Guide 1.109, Rev. 1 (Reference A), except where site-specific data or assumptions have been identified in the ODCM. The general equation (B-8) taken from Regulatory Guide 1.109, and used in the derivation of the simplified Method I approach as described in the Bases section, is also applied to a Method II assessment. No credit for a shielding factor (S_F) associated with residential structures is assumed. Concurrent meteorology with the release period may be utilized for the gamma atmospheric dispersion factor identified in ODCM Equation 7-3 (Part B, Section 7.2.1), and determined as indicated in Part B, Section 7.3.2 for the release point (either ground level or vent stack) from which recorded effluents have been discharged.

3.5 METHOD TO CALCULATE THE SKIN DOSE RATE FROM NOBLE GASES

Part A Control C.7.1.1 limits the dose rate at any time to the skin from noble gases at any location at or beyond the site boundary to 3,000 mrem/year. The Part A Control indirectly limits peak release rates by limiting the dose rate that is predicted from continued release at the peak rate. By limiting $\dot{D}_{skin}$ to a rate equivalent to no more than 3,000 mrem/year, we assure that the skin dose accrued in any one year by any member of the general public is less than 3,000 mrem. Since it can be expected that the peak release rate on which $\dot{D}_{skin}$ is derived would not be exceeded without corrective action being taken to lower it, the resultant average release rate over the year is expected to be considerably less than the peak release rate.

Use Method I or Method IA first to calculate the Skin Dose Rate from peak release rate via station vents. Method I applies at all release rates.

Use Method II if a more refined calculation of $\dot{D}_{skin}$ is desired by the station (i.e., use of actual release point parameters with annual or actual meteorology to obtain release-specific X/Qs) or if Method I or Method IA predicts a dose rate greater than the Part A Control limit to determine if it had actually been exceeded during a short time interval. See Part B, Section 7.2.2 for basis.

Compliance with the dose rate limits for noble gases are continuously demonstrated when effluent release rates are below the plant vent noble gas activity monitor alarm setpoint by virtue of the fact that the alarm setpoint is based on a value which corresponds to the off-site dose rate limit, or a value below it. Determinations of dose rate for compliance with Part A Controls are performed when the effluent monitor alarm setpoint is exceeded.

3.5.1 Method I

For an off-site receptor and elevated effluent release, the Skin Dose Rate due to noble gases is:

$$\dot{D}_{skin(e)} = \sum_i (\dot{Q}_i * DF'_{i(e)}) \qquad (3\text{-}4a)$$

$$\frac{\text{mrem}}{\text{yr}} = \sum \left(\frac{\mu\text{Ci}}{\text{sec}}\right) \left(\frac{\text{mrem - sec}}{\mu\text{Ci - yr}}\right)$$

where

$\dot{D}_{skin(e)}$ = the off-site skin dose rate (mrem/yr) due to noble gases in an effluent discharge from an elevated release point,

$\dot{Q}_i$ = as defined previously, and

$DF'_{i(e)}$ = the combined skin dose factor for elevated discharges (see Table B.1-10).

For an off-site receptor and ground level release, the skin dose rate due to noble gases is:

$$\dot{D}_{skin(g)} = \sum_i (\dot{Q}_i * DF'_{i(g)}) \quad (3\text{-}4b)$$

where

$\dot{D}_{skin(g)}$ = The off-site skin dose rate (mrem/yr) due to noble gases in an effluent discharge from a ground level release point,

$\dot{Q}_i$ = as defined previously, and

$DF'_{i(g)}$ = The combined skin dose factor for ground level discharges (see Table B.1-10).

For an on-site receptor at the Science & Nature Center and elevated release conditions, the skin dose rate due to noble gases is:

$$\dot{D}_{skinE(e)} = 0.0014 * \sum_i (\dot{Q}i * DF'_{iE(e)}) \quad (3\text{-}4c)$$

where

$\dot{D}_{skinE(e)}$ = The skin dose rate (mrem/yr) at the Science & Nature Center due to noble gases in an elevated release,

$\dot{Q}_i$ = as defined previously, and

$DF'_{iE(e)}$ = the combined skin dose factor for elevated discharges (see Table B.1-13).

For an on-site receptor at the Science & Nature Center and ground level release conditions, the skin dose rate due to noble gases is:

$$\dot{D}_{skinE(g)} = 0.0014 * \sum_i (\dot{Q}i * DF'_{iE(g)}) \quad (3\text{-}4d)$$

where

$\dot{D}_{skinE(g)}$ = the skin dose rate (mrem/yr) at the Science & Nature Center due to noble gases in a ground level release,

$\dot{Q}_i$ = as defined previously, and

$DF'_{iE(g)}$ = The combined skin dose factor for ground level discharges (see Table B.1-13).

For an on-site receptor at the "Rocks" and elevated release conditions, the skin dose rate due to noble gases is:

$$\dot{D}_{skinR(e)} = 0.0076 * \sum_i (\dot{Q}i * DF'_{iR(e)}) \quad (3\text{-}4e)$$

where

$\dot{D}_{skinR(e)}$ = the skin dose rate at the "Rocks" due to noble gases in an elevated release,

$\dot{Q}_i$ = as defined previously, and

$DF'_{iR(e)}$ = The combined skin dose factor for elevated discharges (see Table B.1-13).

For an on-site receptor at the "Rocks" and ground level release conditions, the skin dose rate due to noble gases is:

$$\dot{D}_{skinR(g)} = 0.0076 * \sum_i (\dot{Q}_i * DF'_{iR(g)}) \quad (3\text{-}4f)$$

where

$\dot{D}_{skinR(g)}$ = the skin dose rate (mrem/yr) at the "Rocks" due to noble gases in a ground level release,

$\dot{Q}_i$ = as defined previously, and

$DF'_{iR(g)}$ = the combined skin dose factor for ground level discharges (see Table B.1-13).

Equations 3-4a through 3-4f can be applied under the following conditions (otherwise, justify Method I or consider Method II).

1. Normal operations (nonemergency event), and

2. Noble gas releases via any station vent to the atmosphere.

Method IA is implemented by the EMS software as described in Appendix C. Gaseous release models are detailed in Section 6.7.3 of the EMS Software Requirements Specification (Attachment 3 of Appendix C).

3.5.2 Method II

Method II consists of the model and input data (skin dose factors) in Regulatory Guide 1.109, Rev. 1 (Reference A), except where site-specific data or assumptions have been identified in the ODCM. The general equation (B-9) taken from Regulatory Guide 1.109, and used in the derivation of the simplified Method I approach as described in the Bases section, is also applied to a Method II assessment, no credit for a shielding factor (S_F) associated with residential structures is assumed. Concurrent meteorology with the release period may be utilized for the gamma atmospheric dispersion factor and undepleted atmospheric dispersion factor identified in ODCM Equation 7-8 (Part B, Section 7.2.2), and determined as indicted in Part B, Sections 7.3.2 and 7.3.3 for the release point (either ground level or vent stack) from which recorded effluents have been discharged.

3.6 Method to Calculate the Critical Organ Dose Rate from Iodines, Tritium and Particulates with $T_{1/2}$ Greater Than 8 Days

Part A Control C.7.1.1 limits the dose rate at any time to any organ from ^{131}I, ^{133}I, ^{3}H and radionuclides in particulate form with half lives greater than 8 days to 1500 mrem/year to any organ. The Part A Control indirectly limits peak release rates by limiting the dose rate that is predicted from continued release at the peak rate. By limiting $\dot{D}_{co}$ to a rate equivalent to no more than 1500 mrem/year, we assure that the critical organ dose accrued in any one year by any member of the general public is less than 1500 mrem.

Use Method I or Method IA first to calculate the Critical Organ Dose Rate from the peak release rate via the station vents. Method I applies at all release rates.

Use Method II if a more refined calculation of $\dot{D}_{co}$ is desired by the station (i.e., use of actual release point parameters with annual or actual meteorology to obtain release-specific X/Qs) or if Method I or Method IA predicts a dose rate greater than the Part A Control limit to determine if it had actually been exceeded during a short time interval. See Part B, Section 7.2.3 for basis.

3.6.1 Method I

The Critical Organ Dose Rate to an off-site receptor and elevated release conditions can be determined as follows:

$$\dot{D}_{co(e)} = \sum_i (\dot{Q} * DFG'_{ico(e)}) \qquad (3\text{-}5a)$$

$$\left(\frac{\text{mrem}}{\text{yr}}\right) = \sum \left(\frac{\mu\text{Ci}}{\text{sec}}\right) * \left(\frac{\text{mrem - sec}}{\mu\text{Ci - yr}}\right)$$

where

$\dot{D}_{co(e)}$ = The off-site critical organ dose rate (mrem/yr) due to iodine, tritium, and particulates in an elevated release,

$\dot{Q}_i$ = the activity release rate at the station vents of radionuclide "i" in µCi/sec (i.e., total activity measured of radionuclide "i" averaged over the time period for which the filter/charcoal sample collector was in the effluent stream. For i = Sr89 or Sr90, use the best estimates, such as most recent measurements), and

$DFG'_{ico(e)}$ = the site-specific critical organ dose rate factor $\left(\frac{\text{mrem - sec}}{\mu\text{Ci - yr}}\right)$ for an elevated gaseous release (See Table B.1-12).

For an off-site receptor and ground level release, the critical organ dose rate can be determined as follows:

$$\dot{D}_{co(g)} = \sum_i (\dot{Q}_i \, DFG'_{ico(g)}) \qquad (3\text{-}5b)$$

where

$\dot{D}_{co(g)}$ = the off-site critical organ dose rate (mrem/yr) due to iodine, tritium, and particulates in a ground level release,

$\dot{Q}_i$ = as defined previously, and

$DFG'_{ico(g)}$ = the site-specific critical organ dose rate factor for a ground level gaseous discharge (see Table B.1-12).

For an on-site receptor at the Science & Nature Center and elevated release conditions, the critical organ dose rate can be determined as follows:

$$\dot{D}_{coE(e)} = 0.0014 * \sum_i (\dot{Q}_i \, DFG'_{icoE(e)}) \qquad (3\text{-}5c)$$

where

$\dot{D}_{coE(e)}$ = The critical organ dose rate (mrem/yr) to a receptor at the Science & Nature Center due to iodine, tritium, and particulates in an elevated release,

$\dot{Q}_i$ = as defined previously, and

$DFG'_{icoE(e)}$ = the Science & Nature Center-specific critical organ dose rate factor for an elevated discharge (see Table B.1-14).

For an on-site receptor at the Science & Nature Center and ground level release conditions, the critical organ dose rate is:

$$\dot{D}_{coE(g)} = 0.0014 * \sum_i (\dot{Q}_i * DFG'_{icoE(g)}) \quad (3\text{-}5d)$$

where

$\dot{D}_{coE(g)}$ = the critical organ dose rate (mrem/yr) to a receptor at the Science & Nature Center due to iodine, tritium, and particulates in a ground level release,

$\dot{Q}_i$ = as defined previously, and

$DFG'_{icoE(g)}$ = the Science & Nature Center-specific critical organ dose rate factor for a ground level discharge (see Table B.1-14).

For an on-site receptor at the "Rocks" and elevated release conditions, the critical organ dose rate is:

$$\dot{D}_{coR(e)} = 0.0076 * \sum_i (\dot{Q}_i * DFG'_{icoR(e)}) \quad (3\text{-}5e)$$

where

$\dot{D}_{coR(e)}$ = The critical organ dose rate (mrem/yr) to a receptor at the "Rocks" due to iodine, tritium, and particulates in an elevated release,

$\dot{Q}_i$ = as defined previously, and

$DFG'_{icoR(e)}$ = the "Rocks"-specific critical organ dose rate factor for an elevated discharge (see Table B.1-15).

For an on-site receptor at the "Rocks" and ground level release conditions, the critical organ dose rate is:

$$\dot{D}_{coR(g)} = 0.0076 * \sum_i (\dot{Q}_i * DFG'_{icoR(g)}) \quad (3\text{-}5f)$$

where

$\dot{D}_{coR}$ and $\dot{Q}_i$ = are as defined previously, and

$DFG'_{icoR(g)}$ = the "Rocks"-specific critical organ dose rate factor for a ground level discharge (see Table B.1-15).

Equations 3-5a through 3-5f can be applied under the following conditions (otherwise, justify Method I or consider Method II):

1. Normal operations (not emergency event), and

2. Tritium, I-131 and particulate releases via monitored station vents to the atmosphere.

Method IA is implemented by the EMS software as described in Appendix C. Gaseous release models are detailed in Section 6.7.3 of the EMS Software Requirements Specification (Attachment 3 of Appendix C).

3.6.2 Method II

Method II consists of the models, input data and assumptions in Appendix C of Regulatory Guide 1.109, Rev. 1 (Reference A), except where site-specific data or assumptions have been identified in the ODCM (see Tables B.7-2 and B.7-3). The critical organ dose rate will be determined based on the location (site boundary, nearest resident, or farm) of receptor pathways as identified in the most recent annual land use census, or by conservatively assuming the existence of all pathways (ground plane, inhalation, ingestion of stored and leafy vegetables, milk, and meat) at an off-site location of maximum potential dose. Concurrent meteorology with the release period may be utilized for determination of atmospheric dispersion factors in accordance with Part B, Sections 7.3.2 and 7.3.3 for the release point (either ground level or vent stack) from which recorded effluents have been discharged. The maximum critical organ dose rates will consider the four age groups independently, and take no credit for a shielding factor (S_F) associated with residential structures.

3.7 Method to Calculate the Gamma Air Dose from Noble Gases

Part A Control C.7.2.1 limits the gamma dose to air from noble gases at any location at or beyond the site boundary to 5 mrad in any quarter and 10 mrad in any year per unit. Dose evaluation is required at least once per 31 days.

Use Method I or Method IA first to calculate the gamma air dose from the station gaseous effluent releases during the period.

Use Method II if a more refined calculation is needed (i.e., use of actual release point parameter with annual or actual meteorology to obtain release-specific X/Qs), or if Method I or Method IA predicts a dose greater than the Part A Control limit to determine if it had actually been exceeded. See Part B, Section 7.2.4 for basis.

3.7.1 Method I

The general form of the gamma air dose equation is:

$$D^{\gamma}_{air} = 3.17E-02 * \left[\frac{X}{Q}\right]^{\gamma}_{1hr} * t^{-a} * \sum_i \left(Q_i * DF^{\gamma}_i\right) \qquad (3\text{-}6)$$

$$(\text{mrad}) = \left(\frac{\text{pCi-yr}}{\mu\text{Ci-sec}}\right) * \left(\frac{\text{sec}}{\text{m}^3}\right) * (\ ) * \Sigma(\mu\text{Ci}) \left(\frac{\text{mrad-m}^3}{\text{pCi-yr}}\right)$$

where

D^{γ}_{air} is the gamma air dose.

3.17E-02 is the number of pCi per μCi divided by the number of second per year,

$[X/Q]^{\gamma}_{1hr}$ is the 1-hour gamma atmospheric dispersion factor,

t^{-a} is a unitless factor which adjusts the 1-hour $[X/Q]^{\gamma}$ value for a release with a total duration of t hours,

Q_i is the total activity in μCi of each radionuclide "i" released to the atmosphere from the station gaseous effluent release point during the period of interest, and

DF^{γ}_i is the gamma dose factor to air for radionuclide "i" (see Table B.1-10).

Incorporating receptor location-specific atmospheric dispersion factors ($[X/Q]^{\gamma}$), adjustment factors (t^{-a}) for elevated and ground-level effluent release conditions, and occupancy factors when applicable (see Section 7.2.7), yields a series of equations by which the gamma air dose can be determined.

a. Maximum off-site receptor location, elevated release conditions:

$$D^{\gamma}_{air(e)} = 3.2E-07 * t^{-0.275} * \sum_i (Q_i * DF^{\gamma}_i) \quad (3\text{-}6a)$$

$$(\text{mrad}) = \left(\frac{\text{pCi - yr}}{\mu\text{Ci - m}^3}\right) * (\ ) * \Sigma(\mu\text{Ci}) \left(\frac{\text{mrad - m}^3}{\text{pCi - yr}}\right)$$

b. Maximum off-site receptor location, ground-level release conditions:

$$D^{\gamma}_{air(g)} = 1.6E-06 * t^{-0.293} * \sum_i (Q_i * DF^{\gamma}_i) \quad (3\text{-}6b)$$

$$(\text{mrad}) = \left(\frac{\text{pCi - yr}}{\mu\text{Ci - m}^3}\right) * (\ ) * \Sigma(\mu\text{Ci}) \left(\frac{\text{mrad - m}^3}{\text{pCi - yr}}\right)$$

c. Science & Nature Center receptor; elevated release conditions:

$$D^{\gamma}_{airE(e)} = 4.9E-10 * t^{-0.252} * \sum_i (Q_i * DF^{\gamma}_i) \quad (3\text{-}6c)$$

$$(\text{mrad}) = \left(\frac{\text{pCi- yr}}{\mu\text{Ci- m}^3}\right) * (\ ) \Sigma \left(\mu\text{Ci} * \frac{\text{mrad- m}^3}{\text{pCi- yr}}\right)$$

d. Science & Nature Center receptor; ground-level release conditions:

$$D^{\gamma}_{airE(g)} = 4.4E-09 * t^{-0.321} * \sum_i (Q_i * DF^{\gamma}_i) \quad (3\text{-}6d)$$

$$(\text{mrad}) = \left(\frac{\text{pCi- yr}}{\mu\text{Ci- m}^3}\right) * (\ ) \Sigma \left(\mu\text{Ci} * \frac{\text{mrad- m}^3}{\text{pCi- yr}}\right)$$

e. Receptor at the "Rocks"; elevated release conditions:

$$D^{\gamma}_{airR(e)} = 5.1E-09 * t^{-0.155} * \sum_i (Q_i * DF^{\gamma}_i) \quad (3\text{-}6e)$$

$$(\text{mrad}) = \left(\frac{\text{pCi- yr}}{\mu\text{Ci- m}^3}\right) * (\ ) \Sigma \left(\mu\text{Ci} * \frac{\text{mrad- m}^3}{\text{pCi- yr}}\right)$$

f. Receptor at the "Rocks"; ground-level release conditions:

$$D^{\gamma}_{airR(g)} = 4.1E\text{-}08 * t^{-0.204} * \sum_i (Q_i * DF^{\gamma}_i) \qquad (3\text{-}6f)$$

$$(\text{mrad}) = \left(\frac{\text{pCi-yr}}{\mu\text{Ci-m}^3}\right) * (\ ) \sum \left(\mu\text{Ci} * \frac{\text{mrad-m}^3}{\text{pCi-yr}}\right)$$

Equations 3-6a through 3-6f can be applied under the following conditions (otherwise justify Method I or consider Method II):

1. Normal operations (nonemergency event), and

2. Noble gas releases via station vents to the atmosphere.

Method IA is implemented by the EMS software as described in Appendix C. Gaseous release models are detailed in Section 6.7.3 of the EMS Software Requirements Specification (Attachment 3 of Appendix C).

3.7.2 Method II

Method II consists of the models, input data (dose factors) and assumptions in Regulatory Guide 1.109, Rev. 1 (Reference A), except where site-specific data or assumptions have been identified in the ODCM. The general equations (B-4 and B-5) taken from Regulatory Guide 1.109, and used in the derivation of the simplified Method I approach as described in the Part B Bases Section 7.2.4 are also applied to Method II assessments. Concurrent meteorology with the release period may be utilized for the gamma atmospheric dispersion factor identified in ODCM Equation 7-14, and determined as indicated in Part B, Section 7.3.2 for the release point (either ground level or vent stack) from which recorded effluents have been discharged.

3.8 Method to Calculate the Beta Air Dose from Noble Gases

Part A Control C.7.2.1 limits the beta dose to air from noble gases at any location at or beyond the site boundary to 10 mrad in any quarter and 20 mrad in any year per unit. Dose evaluation is required at least once per 31 days.

Use Method I or Method IA first to calculate the beta air dose from gaseous effluent releases during the period. Method I applies at all dose levels.

Use Method II if a more refined calculation is needed (i.e., use of actual release point parameters with annual or actual meteorology to obtain release-specific X/Qs) or if Method I or Method IA predicts a dose greater than the Part A Control limit to determine if it had actually been exceeded. See Part B, Section 7.2.5 for basis.

3.8.1 Method I

The general form of the beta air dose equation is:

$$D_{air}^{\beta} = 3.17E\text{-}02 * (X/Q)_{1hr} * t^{-a} * \sum(Q_i * DF_i^{\beta}) \qquad (3\text{-}7)$$

$$(\text{mrad}) = \left(\frac{\text{pCi-yr}}{\mu\text{Ci-m}^3}\right) * \left(\frac{\text{sec}}{\text{m}^3}\right) * (\ ) * \Sigma\left(\mu\text{Ci} * \frac{\text{mrad-m}^3}{\text{pCi-yr}}\right)$$

where

D_{air}^{β} is the beta air dose,

3.17E-02 is the number of pCi per µCi divided by the number of seconds per year,

$(X/Q)_{1hr}$ is the 1-hour undepleted atmospheric dispersion factor,

t^{-a} is a unitless factor which adjusts the 1-hour X/Q value for a release with a total duration of t hours,

Q_i is the total activity (µCi) of each radionuclide "i" released to the atmosphere during the period of interest, and

DF_i^{β} is the beta dose factor to air for radionuclide "i" (see Table B.1-10).

Incorporating receptor location-specific atmospheric dispersion factor (X/Q), adjustment factors (t^{-a}) for elevated and ground-level effluent release conditions, and occupancy factors when applicable (see Section 7.2.7) yields a series of equations by which the Beta Air Dose can be determined.

a. Maximum off-site receptor location, elevated release conditions:

$$D^{\beta}_{air(e)} = 4.1E\text{-}7 * t^{-0.3} * \sum_i (Q_i * DF_i^{\beta}) \qquad (3\text{-}7a)$$

$$(\text{mrad}) = (\frac{\text{pCi-yr}}{\mu\text{Ci-m}^3}) * (\ ) \Sigma (\mu\text{Ci} * \frac{\text{mrad-m}^3}{\text{pCi-yr}})$$

b. Maximum off-site receptor location, ground-level release conditions:

$$D^{\beta}_{air(g)} = 6.0E\text{-}06 * t^{-0.319} * \sum_i (Q_i * DF_i^{\beta}) \qquad (3\text{-}7b)$$

$$(\text{mrad}) = (\frac{\text{pCi-yr}}{\mu\text{Ci-m}^3}) * (\ ) \Sigma (\mu\text{Ci} * \frac{\text{mrad-m}^3}{\text{pCi-yr}})$$

c. Science & Nature Center receptor; elevated release conditions:

$$D^{\beta}_{airE(e)} = 1.8E\text{-}09 * t^{-0.35} * \sum_i (Q_i * DF_i^{\beta}) \qquad (3\text{-}7c)$$

$$(\text{mrad}) = (\frac{\text{pCi-yr}}{\mu\text{Ci-m}^3}) * (\ ) \Sigma (\mu\text{Ci} * \frac{\text{mrad-m}^3}{\text{pCi-yr}})$$

d. Science & Nature Center receptor; ground-level release conditions:

$$D^{\beta}_{airE(g)} = 2.4E\text{-}08 * t^{-0.347} * \sum_i (Q_i * DF_i^{\beta}) \qquad (3\text{-}7d)$$

$$(\text{mrad}) = (\frac{\text{pCi-yr}}{\mu\text{Ci-m}^3}) * (\ ) \Sigma (\mu\text{Ci} * \frac{\text{mrad-m}^3}{\text{pCi-yr}})$$

e. Receptor at the "Rocks"; elevated release conditions:

$$D^{\beta}_{airR(e)} = 3.9E\text{-}08 * t^{-0.249} * \sum_i (Q_i * DF_i^{\beta}) \qquad (3\text{-}7e)$$

$$(\text{mrad}) = (\frac{\text{pCi-yr}}{\mu\text{Ci-m}^3}) * (\ ) \Sigma (\mu\text{Ci} * \frac{\text{mrad-m}^3}{\text{pCi-yr}})$$

f. Receptor at the "Rocks"; ground-level release conditions:

$$D^{\beta}_{airR(g)} = 4.6E\text{-}07 * t^{-0.267} * \sum_i (Q_i * DF_i^{\beta}) \qquad (3\text{-}7f)$$

$$(\text{mrad}) = (\frac{\text{pCi-yr}}{\mu\text{Ci-m}^3}) * (\ ) \Sigma (\mu\text{Ci} * \frac{\text{mrad-m}^3}{\text{pCi-yr}})$$

Equations 3-7a through 3-7f can be applied under the following conditions (otherwise justify Method I or consider Method II):

1. Normal operations (nonemergency event), and

2. Noble gas releases via station vents to the atmosphere.

Method IA is implemented by the EMS software as described in Appendix C. Gaseous release models are detailed in Section 6.7.3 of the EMS Software Requirements Specification (Attachment 3 of Appendix C).

3.8.2 Method II

Method II consists of the models, input data (dose factors) and assumptions in Regulatory Guide 1.109, Rev. 1 (Reference A), except where site-specific data or assumptions have been identified in the ODCM. The general equations (B-4 and B-5) taken from Regulatory Guide 1.109, and used in the derivation of the simplified Method I approach as described in the Part B Bases Section 7.2.5, are also applied to Method II assessments. Concurrent meteorology with the release period may be utilized for the atmospheric dispersion factor identified in ODCM Equation 7-15, and determined, as indicated in Part B, Sections 7.3.2 and 7.3.3 for the release point (either ground level or vent stack) from which recorded effluents have been discharged.

3.9 Method to Calculate the Critical Organ Dose from Iodines, Tritium and Particulates

Part A Control C.7.3.1 limits the critical organ dose to a member of the public from radioactive iodines, tritium, and particulates with half-lives greater than 8 days in gaseous effluents to 7.5 mrem per quarter and 15 mrem per year per unit. Part A Control C.7.3.1 limits the total body and organ dose to any real member of the public from all station sources (including gaseous effluents) to 25 mrem in a year except for the thyroid, which is limited to 75 mrem in a year.

Use Method I or Method IA first to calculate the critical organ dose from gaseous effluent releases as it is simpler to execute and more conservative than Method II.

Use Method II if a more refined calculation of critical organ dose is needed (i.e., Method I or Method IA indicates the dose is greater than the limit). See Part B, Section 7.2.6 for basis.

3.9.1 Method I

$$D_{co} = (X/Q)_{1hr}^{depl} / (X/Q)_{an}^{depl} * t^{-a} * \sum_i (Q_i * DFG_{ico}) \qquad (3\text{-}8)$$

$$(\text{mrem}) = (\frac{\text{sec}}{\text{m}^3}) / (\frac{\text{sec}}{\text{m}^3}) * (\ ) * \Sigma(\mu\text{Ci}) * (\frac{\text{mrem}}{\mu\text{Ci}})$$

where

D_{co} is the critical organ dose from iodines, tritium, and particulates,

$(X/Q)_{1hr}^{depl}$ is the 1-hour depleted atmospheric dispersion factor.

$(X/Q)_{an}^{depl}$ is the annual average depleted atmospheric dispersion.

t^{-a} is a unitless adjustment factor to account for a release with a total duration of t hours,

Q_i is the total activity in μCi of radionuclide "i" released to the atmosphere during the period of interest (for strontiums, use the most recent measurement), and

DFG_{ico} is the site-specific critical organ dose factor for radionuclide "i", see Tables B.1-12, B.1-14, and B.1-15. (For each radionuclide, it is the age group and organ with the largest dose factor.)

Incorporating receptor location-specific atmospheric dispersion factors ($(X/Q)_{1hr}^{depl}$ and $(X/Q)_{an}^{depl}$) and adjustment factors (t^{-a}) for elevated and ground-level release conditions, and incorporating occupancy factors when applicable (see Section 7.2.7), yields a series of equations by which the critical organ dose can be determined.

a. Maximum off-site receptor location, elevated release conditions:

$$D_{co(e)} = 14.8 * t^{-0.297} * \sum_i (Q_i * DFG_{ico(e)}) \quad (3\text{-}8a)$$

$$(\text{mrem}) = (\ ) * (\ ) \Sigma (\mu\text{Ci} * \frac{\text{mrem}}{\mu\text{Ci}})$$

b. Maximum off-site receptor location, ground-level release conditions:

$$D_{co(g)} = 17.7 * t^{-0.316} * \sum_i (Q_i * DFG_{ico(g)}) \quad (3\text{-}8b)$$

$$(\text{mrem}) = (\ ) * (\ ) \Sigma (\mu\text{Ci} * \frac{\text{mrem}}{\mu\text{Ci}})$$

c. Science & Nature Center receptor; elevated release conditions:

$$D_{coE(e)} = 3.3\text{E-}02 * t^{-0.349} * \sum_i (Q_i * DFG_{icoE(e)}) \quad (3\text{-}8c)$$

$$(\text{mrem}) = (\ ) * (\ ) \Sigma (\mu\text{Ci} * \frac{\text{mrem}}{\mu\text{Ci}})$$

d. Science & Nature Center receptor; ground-level release conditions:

$$D_{coE(g)} = 3.3\text{E-}02 * t^{-0.347} * \sum_i (Q_i * DFG_{icoE(g)}) \quad (3\text{-}8d)$$

$$(\text{mrem}) = (\ ) * (\ ) \Sigma (\mu\text{Ci} * \frac{\text{mrem}}{\mu\text{Ci}})$$

e. Receptor at the "Rocks"; elevated release conditions:

$$D_{coR(e)} = 7.3\text{E-}02 * t^{-0.248} * \sum_i (Q_i * DFG_{icoR(e)}) \quad (3\text{-}8e)$$

$$(\text{mrem}) = (\ ) * (\ ) \Sigma (\mu\text{Ci} * \frac{\text{mrem}}{\mu\text{Ci}})$$

f. Receptor at the "Rocks"; ground-level release conditions:

$$D_{coR(g)} = 8.6\text{E-}02 * t^{-0.267} * \sum_i (Q_i * DFG_{icoR(g)}) \quad (3\text{-}8f)$$

$$(\text{mrem}) = (\ ) * (\ ) \Sigma (\mu\text{Ci} * \frac{\text{mrem}}{\mu\text{Ci}})$$

Equations 3-8a through 3-8f can be applied under the following conditions (otherwise, justify Method I or consider Method II):

1. Normal operations (nonemergency event),

2. Iodine, tritium, and particulate releases via station vents to the atmosphere, and

3. Any continuous or batch release over any time period.

Method IA is implemented by the EMS software as described in Appendix C. Gaseous release models are detailed in Section 6.7.3 of the EMS Software Requirements Specification (Attachment 3 of Appendix C).

3.9.2 Method II

Method II consists of the models, input data and assumptions in Appendix C of Regulatory Guide 1.109, Rev. 1 (Reference A), except where site-specific data or assumptions have been identified in the ODCM (see Tables B.7-2 and B.7-3). The critical organ dose will be determined based on the location (site boundary, nearest resident, or farm) of receptor pathways, as identified in the most recent annual land use census, or by conservatively assuming the existence of all pathways (ground plane, inhalation, ingestion of stored and leafy vegetables, milk and meat) at an off-site location of maximum potential dose. Concurrent meteorology with the release period may be utilized for determination of atmospheric dispersion factors in accordance with Part B, Sections 7.3.2 and 7.3.3 for the release point (either ground level or vent stack) from which recorded effluents have been discharged. The maximum critical organ dose will consider the four age groups independently, and use a shielding factor (S_F) of 0.7 associated with residential structures.

3.10 Method to Calculate Direct Dose from Plant Operation

Part A Control C.8.1.1 restricts the dose to the whole body or any organ to any member of the public from all uranium fuel cycle sources to 25 mrem in a calendar year (except the thyroid, which is limited to 75 mrem). Direct radiation from contained sources is required to be included in the assessment of compliance with this standard.

3.10.1 Method

The direct dose from the station will be determined by obtaining the dose from TLD locations situated on-site near potential sources of direct radiation, as well as those TLDs near the site boundary which are part of the environmental monitoring program, and subtracting out the dose contribution from background. Additional methods to calculate the direct dose may also be used to supplement the TLD information, such as high pressure ion chamber measurements, or analytical design calculations of direct dose from identified sources (such as solid waste storage facilities).

The dose determined from direct measurements or calculations will be related to the nearest real person off-site, as well as those individuals on-site involved in activities at either the Education Center or the Rocks boat landing, to assess the contribution of direct radiation to the total dose limits of Part A Control C.8.1.1 in conjunction with liquid and gaseous effluents.

3.11 Dose Projections

Part A Controls C.6.3.1 and C.7.4.1 require that appropriate portions of liquid and gaseous radwaste treatment systems, respectively, be used to reduce radioactive effluents when it is projected that the resulting dose(s) would exceed limits which represent small fractions of the "as low as reasonably achievable" criteria of Appendix I to 10 CFR Part 50. The surveillance requirements of these Part A Controls state that dose projections be performed at least once per 31 days when the liquid radwaste treatment systems or gaseous radwaste treatment systems are not being fully utilized.

Since dose assessments are routinely performed at least once per 31 days to account for actual releases, the projected doses shall be determined by comparing the calculated dose from the last (typical of expected operations) completed 31-day period to the appropriate dose limit for use of radwaste equipment, adjusted if appropriate for known or expected differences between past operational parameters and those anticipated for the next 31 days.

3.11.1 Liquid Dose Projections

The 31-day liquid dose projections are calculated by the following:

a. Determine the total body D_{tb} and organ dose D_{mo} (Equations 3-1 and 3-2, respectively) for the last typical completed 31-day period. The last typical 31-day period should be one without significant identified operational differences from the period being projected to, such as full power operation vs. periods when the plant is shut down. For periods with identified operational differences, skip to subsection 3.11.1.e. below.

b. Calculate the ratio (R_1) of the total estimated volume of batch releases expected to be released for the projected period to that actually released in the reference period.

c. Calculate the ratio (R_2) of the estimated gross primary coolant activity for the projected period to the average value in the reference period. Use the most recent value of primary coolant activity as the projected value if no trend in decreasing or increasing levels can be determined.

d. Determine the projected dose from:

Total Body: $D_{tb\,pr} = D_{tb} \cdot R_1 \cdot R_2$

Max. Organ: $D_{mo\,pr} = D_{mo} \cdot R_1 \cdot R_2$

e. During periods when significant operational differences are identified, such as shutdowns vs. normal power operations, or when specific treatment components are expected to be bypassed or out of service for repair or maintenance, the projected dose should be based on an assessment of the expected amount of radioactivity that could be discharged, both through treated and any untreated pathways, over the next 31 days. Specific consideration should be given to effluent streams and treatment systems noted on Figure B.6-1. The volume of liquid to be released, the current or projected maximum radioactivity concentration in the effluent streams either prior to treatment or at the point of release to the environment, and the duration of expected release evaluations should be estimated as part of the projection of offsite dose.

For these periods outside the bounds of steps 3.11.1.a. when significant operational differences exist from the last reference period, the projected dose to the total body D_{tb} and organ dose D_{mo} shall use Equations 3-1 and 3-2, respectively to project dose for each definable time segment of release evolution and summed over the next 31 days. The radioactive release quantity, Q_i, in equations 3-1 and 3-2 represents the estimated quantity of radionuclide "i" estimated to be released over the next 31 days, or during short time periods for defined plant operational evaluations, based on expected volumes, concentrations and treatment options to be applied.

The EMS software can also be used to perform monthly projected dose calculations as described in Appendix C. The methodology applied by EMS in projecting liquid doses is outlined in Section 2.7 of Attachment 4 to Appendix C (EMS Technical Reference Manual).

3.11.2 Gaseous Dose Projections

1. For the gaseous radwaste treatment system, the 31-day dose projections are calculated by the following:

   a. Determine the gamma air dose D^{γ}_{air} (Equation 3-6a), and the beta air dose D^{β}_{air} (Equation 3-7a) from the last typical 31-day operating period. The last typical 31-day period should be one without significant identified operational differences from the period being projected to, such as full power steady state operation vs. periods when the plant is shutdown. For periods with identified operational differences, skip to subsection 3.11.2.2.e. below.

   b. Calculate the ratio (R3) of anticipated number of curies of noble gas to be released from the hydrogen surge tank to the atmosphere over the next 31 days to the number of curies released in the reference period on which the gamma and beta air doses are based. If no differences between the reference period and the next 31 days can be identified, set R3 to 1.

   c. Determine the projected dose from:

   Gamma Air: $D^{\gamma}_{air\,pr} = D^{\gamma}_{air} \cdot R_3$

   Beta Air: $D^{\beta}_{air\,pr} = D^{\beta}_{air} \cdot R_3$

2. For the ventilation exhaust treatment system, the critical organ dose from iodines, tritium, and particulates are projected for the next 31 days by the following:

   a. Determine the critical organ dose D_{co} (Equation 3-8a) from the last typical 31-day operating period. (If the limit of Part A Control C.7.4.1.c (i.e., 0.3 mrem in 31 days) is exceeded, the projected controlled area annual total effective dose equivalent from all station sources should be assessed to assure that the 10 CFR 20.1301 dose limits to members of the public are not exceeded.)* . The last typical 31-day period should be one without significant identified operational differences from the period being projected to, such as full power steady state operation vs. periods when the plant is shutdown. For periods with identified operational differences, skip to subsection 3.11.2.2.e. below.

b. Calculate the ratio (R_4) of anticipated primary coolant dose equivalent I-131 for the next 31 days to the average dose equivalent I-131 level during the reference period. Use the most current determination of DE I-131 as the projected value if no trend can be determined.

c. Calculate the ratio (R_5) of anticipated primary system leakage rate to the average leakage rate during the reference period. Use the current value of the system leakage as an estimate of the anticipated rate for the next 31 days if no trend can be determined.

d. Determine the projected dose from:

Critical Organ: $D_{co\,pr} = D_{co} \cdot R_4 \cdot R_5$

e. During periods when significant operational differences are identified, such as shutdowns vs. normal power operations, or when specific treatment components are expected to be bypassed or out of service for repair or maintenance, the projected dose should be based on an assessment of the expected amount of radioactivity that could be discharged, both through treated and any untreated pathways, over the next 31 days. Specific consideration should be given to effluent streams and treatment systems noted on Figure B.6-2. The volume or flow rate of gas to be released, the current or projected maximum radioactivity concentration in the effluent streams either prior to treatment or at the point of release to the environment, and the duration of expected release evaluations should be estimated as part of the projection of offsite dose.

For these periods outside the bounds of steps 3.11.2.1.a or 3.11.2.2.a. when significant operational differences exist from the last reference period, the projected air dose from gamma and beta emissions from noble gases (Equations 3-6 and Equations 3-7, respectively), or from iodines, tritium, and particulates (Equations 3-8) shall use the referenced equations to project dose for each definable time segment of release evolution and summed over the next 31 days. The radioactive release quantity, Q_i in the dose equations represents the estimated quantity of radionuclide "i" estimated to be released over the next 31 days, or during short time periods for defined plant operational evaluations, based on expected volumes, concentrations and treatment options to be applied.

3. Alternate Projection Method for Use with Containment Ventilation Exhaust Treatment System (Charcoal Filters)

During periods when the Containment Building air needs to be vented to the atmosphere, the decision to use the Containment charcoal filter train to exhaust Containment air can be based on dose conversion factors and critical organ dose equation that reflect only those real exposure pathways in the offsite environment as indicated by the annual Land Use Census. This reduces the excess conservatism associated with the standard Method I assumptions that all typical (potential) exposure pathways (including milk) may exist at the most limiting atmospheric dispersion point off site.

In place of the dose conversion factors found in Table B.1-12, and critical organ dose equation 3-8a for Dco, Chemistry Department technical evaluation CHSTID 02-004 contains the dose conversion factors (DFG) and critical organ dose equation which were developed in the same manner as the current Method I factors and time dependent dose equation, but which utilize the most recent Land Use Census data to define which exposure pathways and identified receptor locations exist. CHSTID 02-004 documents the development of this alternate dose projection method. After the Land Use Census is performed each year, and before application to any Containment venting evolution, CHSTID 02-004 will be reviewed to see if any new receptor location impacts the selection of controlling dose location.

The EMS software can also be used to perform monthly projected dose calculations as described in Appendix C. The methodology applied by EMS in projecting gaseous dose is outlined in Section 3.8 of Attachment 4 to Appendix C (EMS Technical Reference Manual).

*Note: This action is based on the assumption that tritium is the controlling nuclide for whole body exposures through the inhalation pathway. Maximum annual average on-site X/Q's for station effluent release points are approximately 100 times the values used for the site boundary dose calculations. However, the site boundary doses calculated by the ODCM for iodines, tritium, and particulates with half lives greater than 8 days, includes all potential off-site exposure pathways. For tritium, the inhalation pathway only accounts for 10% of the total dose contribution being calculated. As a result, if the monthly calculation indicates that the site boundary maximum organ dose reached 0.3 mrem, the on-site maximum dose due to inhalation would be approximately 3.0 mrem for this period. If this were projected to continue for a year with a 2000 hour occupancy factor applied, the projected inhalation whole body dose would be approximately 8 mrem, or 8% of the 10 CFR 20.1301 limit. This is a reasonable trigger value for the need to consider the dose contribution from all station sources to members of the public in controlled areas.

3.12 Method to Calculate Total Dose From Plant Operations

ODCM Control C.8.1.1 restricts the annual dose to the whole body or any organ of a member of the public from all uranium fuel cycle sources (including direct radiation) to 25 mrem (except the thyroid, which is limited to 75 mrem). These cumulative dose contribution limits from liquids and gaseous effluents, and direct radiation, implement the Environmental Protection Agency (EPA) 40 CFR 190, "Environmental Standards for the Uranium Fuel Cycle."

3.12.1 Method

Compliance with the Seabrook Station Effluent Controls dose objectives for the maximum individual, as calculated by the methods described in sections B.3.2, B.3.3, B.3.7, B.3.8, B.3.9 of the ODCM also demonstrates compliance with the EPA limits to any member of the public. This indirect determination of compliance is based on the fact that the Effluent Control liquid and gaseous dose objectives are taken from 10 CFR 50, Appendix I, and represent lower values than the 40 CFR 190 dose limits. Direct radiation dose from contained sources is not expected to be a significant contributor to the total dose to areas beyond the site boundary. If the operational dose objectives in the Seabrook ODCM Effluent Controls C.6.2.1.a, C.6.2.1.b, C.7.2.1.a, C.7.2.1.b, C.7.3.1.a, or C.7.3.1.b are determined to be exceeded by a factor of two, a Special Report must be prepared. The purpose of this Special Report is to determine by direct assessment if the cumulative dose (calendar year) to any member of the public (real individual) from all sources is within the limits of the Total Dose Control C.8.1.1.

In addition, section A.10.2, "Annual Radioactive Effluent Release Report," requires that an assessment of radiation doses to the likely most exposed member of the public from all effluent and direct radiation sources be included for the previous calendar year to show compliance with 40 CFR 190.

When required, the total dose to a member of the public will be calculated for all significant effluent release points for all real pathways, including direct radiation. Only effluent releases from Seabrook Station need be considered since no other uranium fuel cycle facilities exist within five miles. EPA has determined that for fuel cycle facilities separated by more than five miles, their contribution to each other's total dose would not be significant and cause dose Standard for the Uranium Fuel Cycle to be exceeded. The calculations will be based on the liquid and gaseous Methods II dose models as described in Section B.3, including usage factors and other documented site-specific parameters reflecting realistic assumptions, where appropriate. The liquid and gaseous effluent Method II models are derived from the methods given in Regulatory Guide 1.109, Rev. 1, October 1977.

The direct radiation component from the facility can be determined using environmental TLD results as noted in Section B.3.10.1 (or alternately, high pressure ion chamber measurements or analytical design calculations for estimating the direct radiation dose from identified contained radioactive sources within the facility).

4.0 RADIOLOGICAL ENVIRONMENTAL MONITORING PROGRAM

The radiological environmental monitoring stations are listed in Table B.4-1. The locations of the stations with respect to the Seabrook Station are shown on the maps in Figures B.4-1 to B.4-6.

Direct radiation measurements are analyzed at the station. All other radiological analyses for environmental samples are performed at a contractor laboratory. The contractor laboratory participates in an Interlaboratory Comparison Program for all relevant species in an aqueous (water) matrix. An independent vendor (Analytics) supplies the remaining cross check samples. These samples are presented on an air filter and in milk and water matrices.

Pursuant to Part A Surveillance S.9.2.1, the land use census will be conducted "during the growing season" at least once per 12 months. The growing season is defined, for the purposes of the land use census, as the period from June 1 to October 1. The method to be used for conducting the census will consist of one or more of the following, as appropriate: door-to-door survey, visual inspection from roadside, aerial survey, or consulting with local agricultural authorities.

Technical Specification 6.8.1.3 and Part A, Section 10.1 of the ODCM require that the results of the Radiological Environmental Monitoring Program be summarized in the Annual Radiological Environmental Operating Report "in the format of the table in the Radiological Assessment Branch Technical Position, Revision 1, 1979." The general table format will be used with one exception and one clarification, as follows. The mean and range values will be based not upon detectable measurements only, as specified in the NRC Branch Technical Position, but upon all measurements. This will prevent the positive bias associated with the calculation of the mean and range based upon detectable measurements only. Secondly, the Lower Limit of Detection column will specify the LLD required by ODCM Table A.9.1-2 for that radionuclide and sample medium.

TABLE B.4-1

RADIOLOGICAL ENVIRONMENTAL MONITORING STATIONS[a]

Exposure Pathway and/or Sample	Sample Location and Designated Code		Distance From Unit 1 Containment (km)	Direction From the Plant
1. AIRBORNE (Particulate and Radioiodine)				
	AP/CF-01	PSNH Barge Landing Area	2.6	ESE
	AP/CF-02	Harbor Road	2.5	E
	AP/CF-03	SW Boundary	1.0	SW
	AP/CF-04	W. Boundary	1.2	W
	AP/CF-05	Winnacunnet H.S.[b]	4.0	NNE
	AP/CF-07	(PSNH Substation)	5.7	NNW
	AP/CF-08	E&H Substation[b]	3.4	SSE
	AP/CF-09	Georgetown Electric Light (Control)	21.4	SSW
2. WATERBORNE				
a. Surface	WS-01	Hampton-Discharge Area	5.3	E
	WS-51	Ipswich Bay (Control)	16.9	SSE
b. Sediment	SE-02	Hampton-Discharge Area[b]	5.3	E
	SE-07	Hampton Beach[b]	3.1	E
	SE-08	Seabrook Beach	3.2	ESE
	SE-52	Ipswich Bay (Control)[b]	16.9	SSE
	SE-57	Plum Island Beach (Control)[b]	15.9	SSE
3. INGESTION				
a. Milk	TM-09	Hampton, NH [d]	5.3	NNW
	TM-15	Hampton Falls, NH [d]	6.9	NW
	TM-20	Rowley, MA [d]	17.0	S
	TM-23	Newbury, MA[d]	12.0	S
b. Fish and Invertebrates[c]				
	FH-03	Hampton - Discharge Area	4.5	ESE
	FH-53	Ipswich Bay (Control)	16.4	SSE
	HA-04	Hampton - Discharge Area	5.5	E
	HA-54	Ipswich Bay (Control)	17.2	SSE
	MU-06	Hampton - Discharge Area	5.2	E
	MU-09	Hampton Harbor[b]	2.6	E
	MU-56	Ipswich Bay (Control)	17.4	SSE
	MU-59	Plum Island[b]	15.8	SSE

TABLE B.4-1
RADIOLOGICAL ENVIRONMENTAL MONITORING STATIONS[a]
(Continued)

Exposure Pathway and/or Sample	Sample Location and Designated Code		Distance From Unit 1 Containment (km)	Direction From the Plant
c. Food Products				
	TG-08	Site Boundary	1.05	W
	TG-09	Site Boundary	.94	SW
	TG-10	Georgetown Light	21.4	SSW
4. DIRECT RADIATION				
	TL-1	Brimmer's Lane, Hampton Falls	.97	N
	TL-2	Landing Rd., Hampton	3.0	NNE
	TL-3	Glade Path, Hampton Beach	2.9	NE
	TL-4	Island Path, Hampton Beach	2.3	ENE
	TL-5	Harbor Rd., Hampton Beach	2.6	E
	TL-6	PSNH Barge Landing Area	2.7	ESE
	TL-7	Cross Rd., Seabrook Beach	2.6	SE
	TL-8	Farm Lane, Seabrook	1.3	SSE
	TL-9	Farm Lane, Seabrook	1.3	S
	TL-10	Site Boundary Fence	1.2	SSW
	TL-11	Site Boundary Fence	1.0	SW
	TL-12	Site Boundary Fence	1.2	WSW
	TL-13	Inside Site Boundary	1.2	W
	TL-14	Trailer Park, Seabrook	1.3	WNW
	TL-15	Brimmer's Lane, Hampton Falls	1.4	NW
	TL-16	Brimmer's Lane, Hampton Falls	1.2	NNW
	TL-17	South Rd., N. Hampton	7.8	N
	TL-18	Mill Rd., N. Hampton	7.6	NNE
	TL-19	Appledore Ave., N. Hampton	7.7	NE
	TL-20	Ashworth Ave., Hampton Beach	3.2	ENE
	TL-21	Route 1A, Seabrook Beach	3.7	SE
	TL-22	Cable Ave., Salisbury Beach	7.6	SSE

TABLE B.4-1
RADIOLOGICAL ENVIRONMENTAL MONITORING STATIONS[a]
(Continued)

Exposure Pathway and/or Sample	Sample Location and Designated Code		Distance From Unit 1 Containment (km)	Direction From the Plant
	TL-23	Ferry Rd., Salisbury	8.1	S
	TL-24	Ferry Lots Lane, Salisbury	7.2	SSW
	TL-25	Elm St., Amesbury	7.6	SW
	TL-26	Route 107A, Amesbury	8.1	WSW
	TL-27	Highland St., S. Hampton	7.5	W
	TL-28	Route 150, Kensington	7.5	WNW
	TL-29	Frying Pan Lane, Hampton Falls	7.2	NW
	TL-30	Route 27, Hampton	7.6	NNW
	TL-31	Alumni Drive, Hampton	3.8	NNE
	TL-32	Seabrook Elementary School	2.0	S
	TL-33	Dock Area, Newburyport	9.8	S
	TL-34	Bow St., Exeter	12.0	NW
	TL-35	Lincoln Ackerman School	2.3	NNW
	TL-36	Route 97, Georgetown (Control)	22.6	SSW
	TL-37	Plaistow, NH (Control)	21.5	WSW
	TL-38	Hampstead, NH (Control)	27.7	W
	TL-39	Fremont, NH (Control)	27.0	WNW
	TL-40	Newmarket, NH (Control)	21.6	NNW
	TL-41	Portsmouth, NH, (Control)[b]	21.0	NNE
	TL-42	Ipswich, MA (Control)[b]	22.8	SSE

TABLE B.4-1
RADIOLOGICAL ENVIRONMENTAL MONITORING STATIONS[a]
(Continued)

(a) Sample locations are shown on Figures B.4-1 to B.4-6.

(b) This sample location is not required by monitoring program defined in Part A of ODCM; program requirements specified in Part A do not apply to samples taken at this location.

(c) Samples will be collected pursuant to ODCM Table A.9.1-1. Samples are not required from all stations listed during any sampling interval (FH = Fish; HA = Lobsters; MU = Mussels). Table A.9.1-1 specifies that "one sample of three commercially and recreationally important species" be collected in the vicinity of the plant discharge area, with similar species being collected at a control location. (This wording is consistent with the NRC Final Environmental Statement for Seabrook Station.) Since the discharge area is off-shore, there is a great number of fish species that could be considered commercially or recreationally important. Some are migratory (such as striped bass), making them less desirable as an indicator of plant-related radioactivity. Some pelagic species (such as herring and mackerel) tend to school and wander throughout a large area, sometimes making catches of significant size difficult to obtain. Since the collection of all species would be difficult or impossible, and would provide unnecessary redundancy in terms of monitoring important pathways to man, three fish and invertebrate species have been specified as a minimum requirement. Samples may include marine fauna such as lobsters, clams, mussels, and bottom-dwelling fish, such as flounder or hake. Several similar species may be grouped together into one sample if sufficient sample mass for a single species is not available after a reasonable effort has been made (e.g., yellowtail flounder and winter flounder)

(d) Monitoring program defined in Part A of ODCM does not require this sample location; food product sampling is being implemented in lieu of an insufficient number ok milk locations.

FIGURE B.4-1
RADIOLOGICAL ENVIRONMENTAL MONITORING LOCATIONS
WITHIN 4 KILOMETERS OF SEABROOK STATION

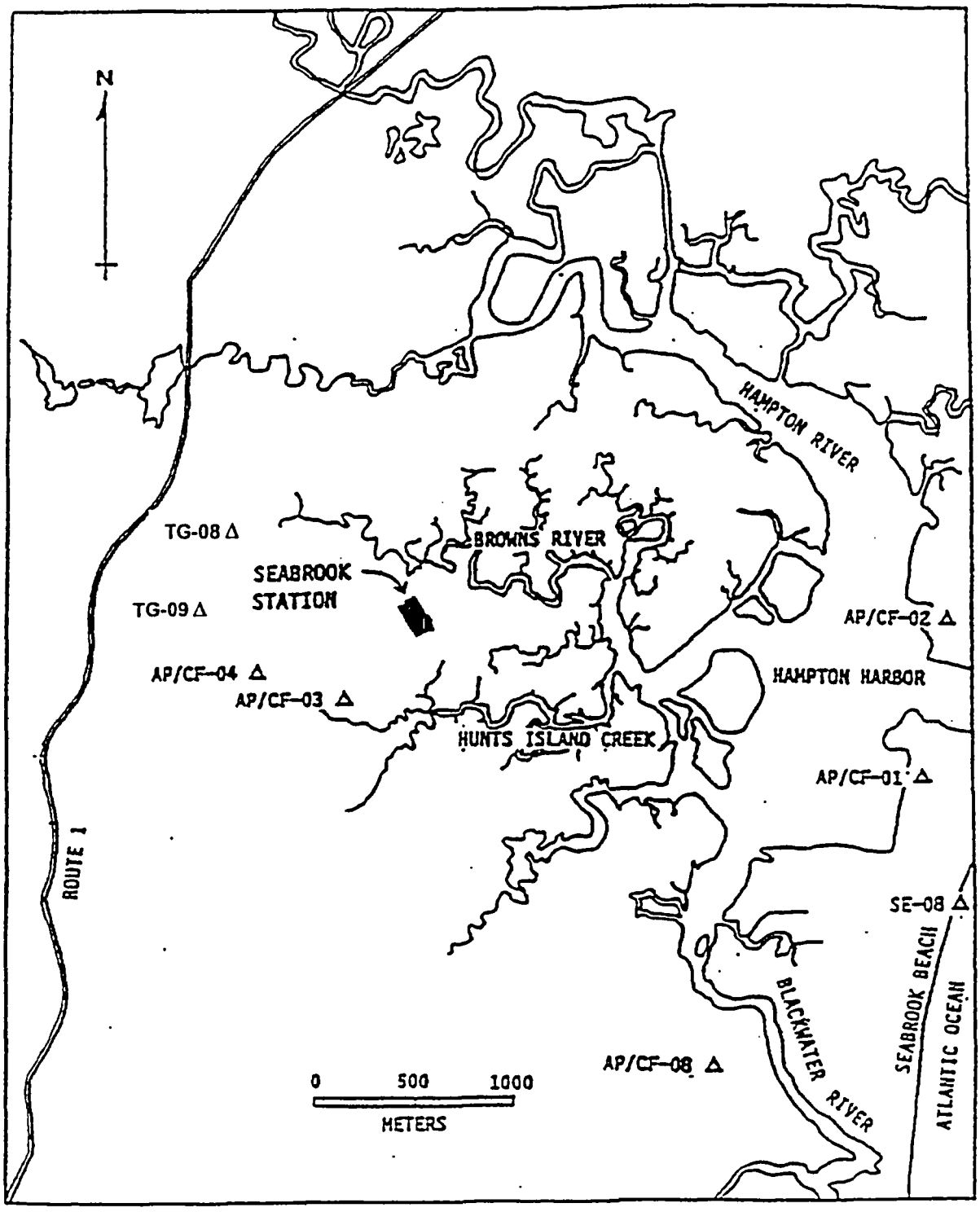

FIGURE B.4-2
RADIOLOGICAL ENVIRONMENTAL MONITORING LOCATIONS
BETWEEN 4 KILOMETERS AND 12 KILOMETERS FROM SEABROOK STATION

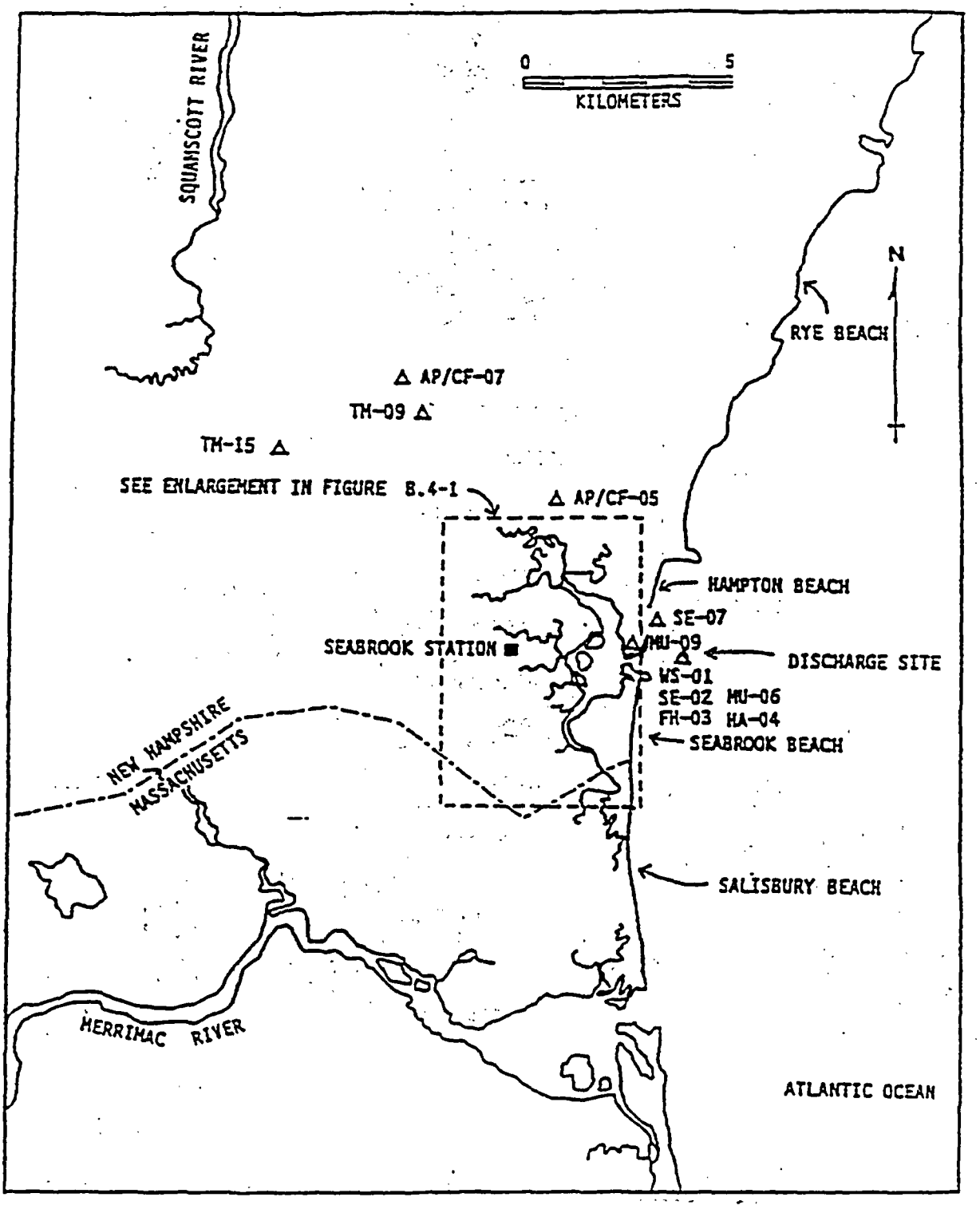

FIGURE B.4-3
RADIOLOGICAL ENVIRONMENTAL MONITORING LOCATIONS
OUTSIDE 12 KILOMETERS OF SEABROOK STATION

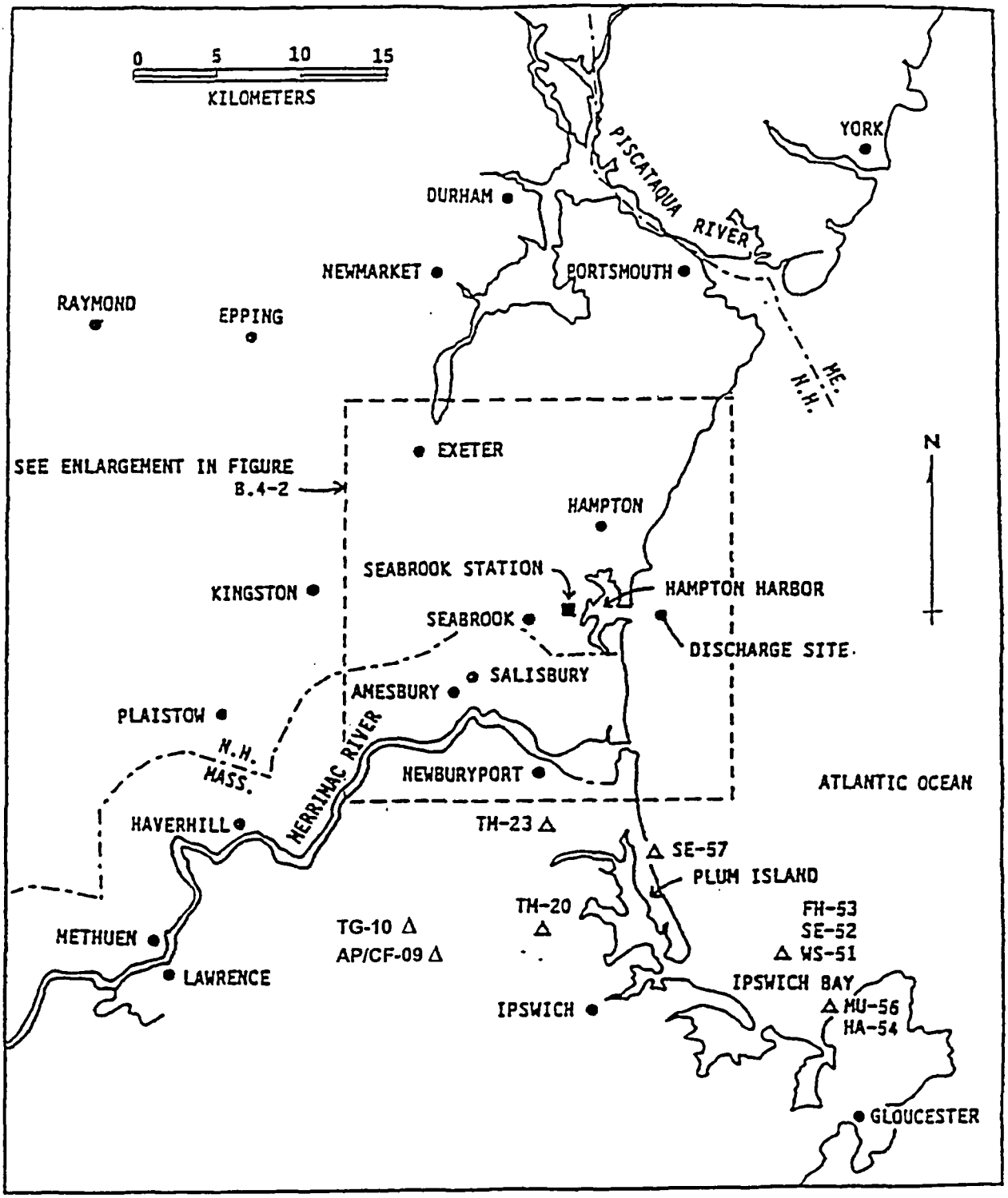

FIGURE B.4-4
DIRECT RADIATION MONITORING LOCATIONS WITHIN
4 KILOMETERS OF SEABROOK STATION

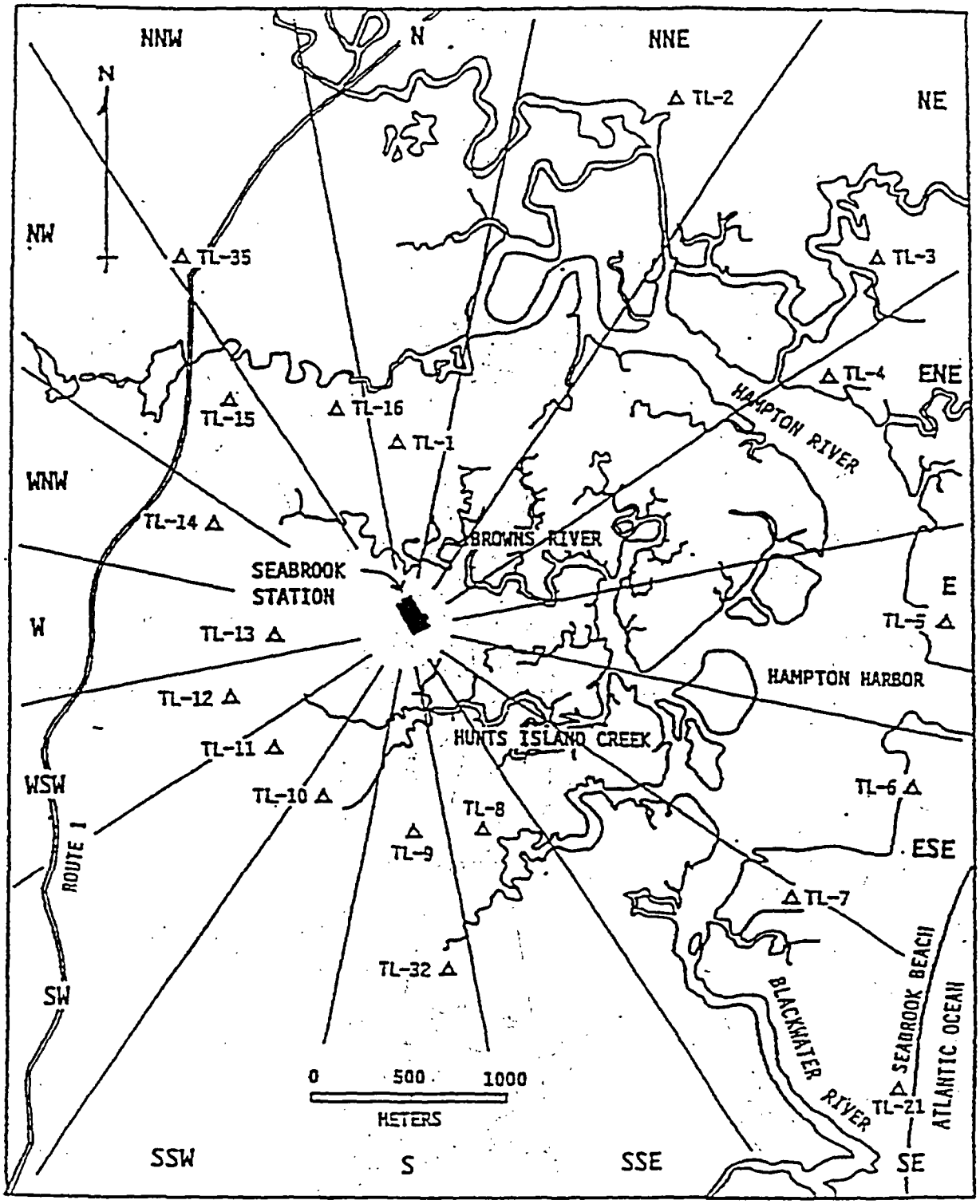

FIGURE B.4-5
DIRECT RADIATION MONITORING LOCATIONS BETWEEN
4 KILOMETERS AND 12 KILOMETERS FROM SEABROOK STATION

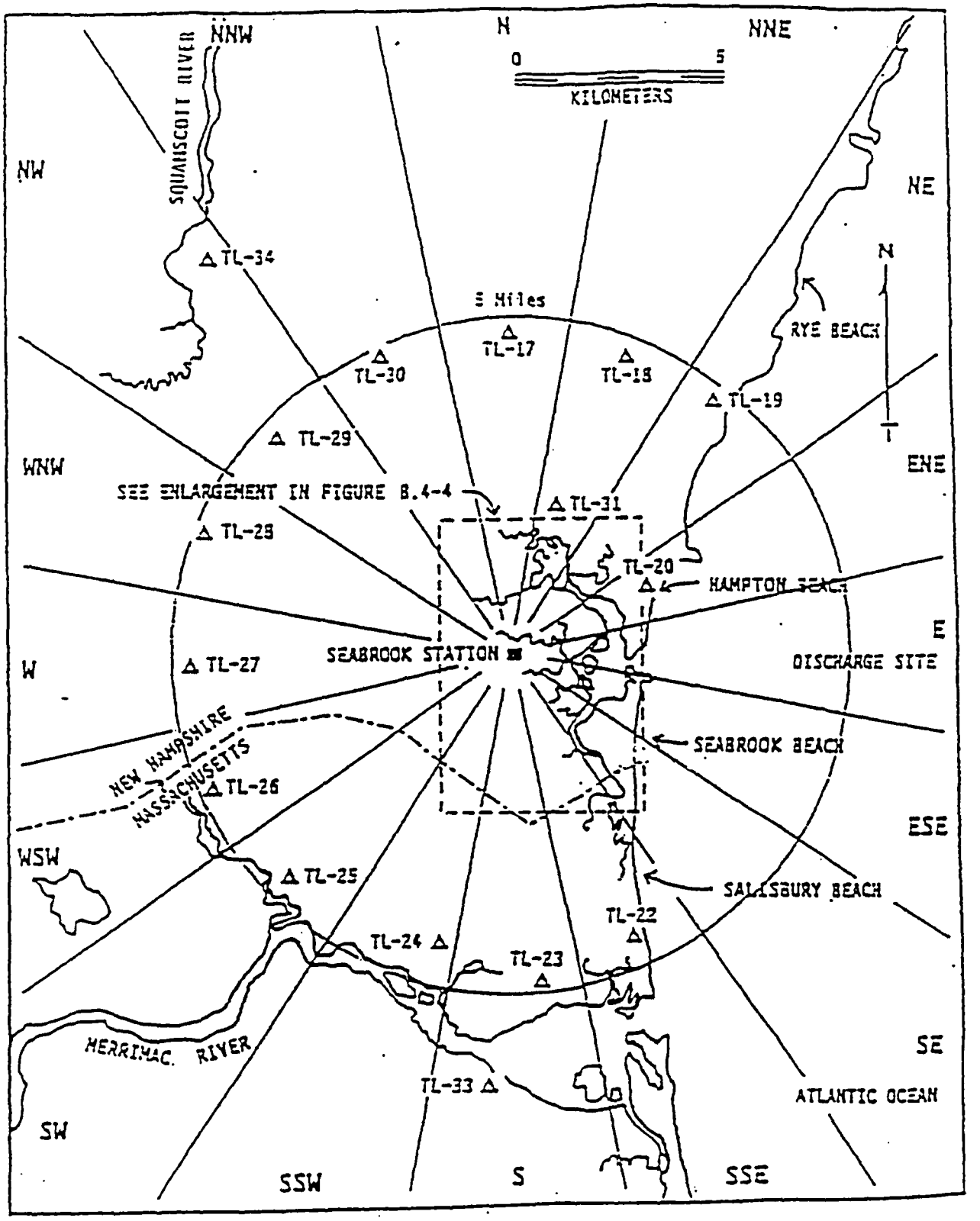

FIGURE B.4-6
DIRECT RADIATION MONITORING LOCATIONS OUTSIDE
12 KILOMETERS OF SEABROOK STATION

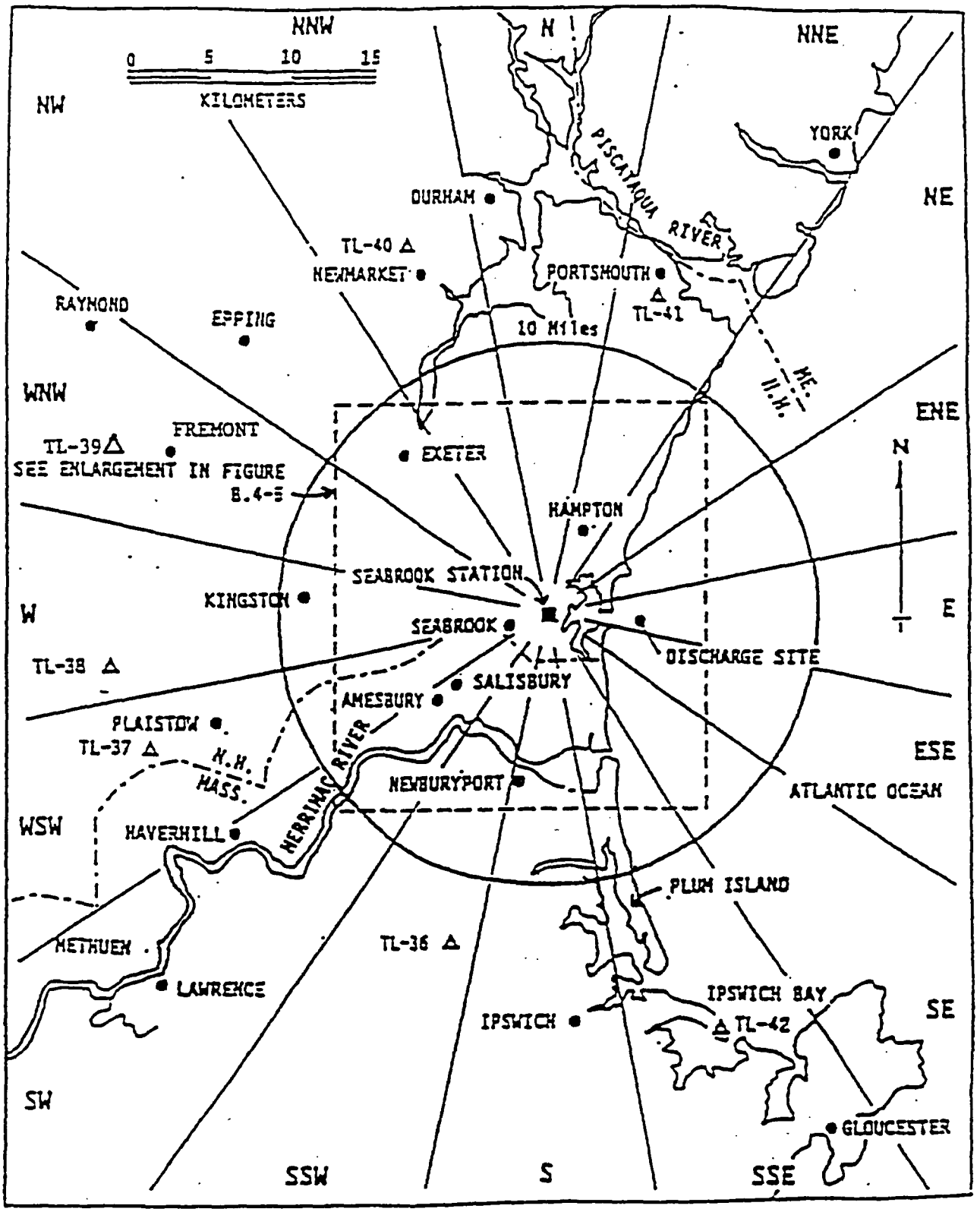

5.0 SETPOINT DETERMINATIONS

Chapter 5 contains the methodology for the calculation of effluent monitor setpoints to implement the requirements of the radioactive effluent monitoring systems Part A Controls C.5.1 and C.5.2 for liquids gases, respectively.

Example setpoint calculations are provided for each of the required effluent monitors.

5.1 *Liquid Effluent Instrumentation Setpoints*

Part A Control C.5.1 requires that the radioactive liquid effluent instrumentation in Table A.5.1-1 of Part A have alarm setpoints in order to ensure that Part A Control C.6.1.1 is not exceeded. Part A Control C.6.1.1 limits the activity concentration in liquid effluents to ten times the ECL values in 10 CFR 20, Appendix B, Table 2, and a total noble gas MPC.

5.1.1 Liquid Waste Test Tank Monitor (RM-6509)

The liquid waste test tank effluent monitor provides alarm and automatic termination of release prior to exceeding ten times the concentration limits specified in 10 CFR 20, Appendix B, Table 2, Column 2 to the environment. It is also used to monitor discharges from various waste sumps to the environment.

5.1.1.1 Method to Determine the Setpoint of the Liquid Waste Test Tank Monitor (RM-6509)

The alarm setpoint is based on ensuring that radioactive effluents in liquid waste are in compliance with Control limits which are based on the concentration limits in Appendix B to 10 CFR 20. The alarm point depends on available dilution flow through the discharge tunnel, radwaste discharge flow rate from the test tanks, the isotopic composition of the liquid waste, and the monitor response efficiency and background count rate applicable at the time of the discharge. The alarm/trip setpoint is determined prior to each batch release taking into account current values for each variable parameter. The following steps are used in determining the monitor setpoint:

First, the minimum required dilution factor is determined by evaluating the isotopic analysis of each test tank to be released along with ECL requirements for each radionuclide. The most recent analysis data for tritium and other beta emitters that are analyzed only monthly or quarterly on composite samples can be used as an estimate of activity concentration in the tank to be released. For noble gases, the Control limit (C.6.1.1) is defined as 2E-04 µCi/ml total for all dissolved and entrained gases. Therefore,

$$DF_{min} = \Sigma \frac{C_i}{10ECL_i} \quad \text{or} \quad \Sigma \frac{C_{NG}}{2E-04}, \text{ whichever is larger.} \qquad (5\text{-}3)$$

Where:

DF_{min} = Minimum required dilution factor necessary to ensure that the sum of the ratios for each nuclide concentration divided by its ECL value is not greater than 10 (dimensionless).

C_i = Activity concentration of each radionuclide "i" (except noble gases) determined to be in the test tank (μCi/ml). This includes tritium and other non gamma emitting isotopes either measured or estimated from the most recent composite analysis.

C_{ng} = The sum of all dissolved and entrained noble gases identified in each test tank (μCi/ml).

ECL_i = Effluent concentration limit (ECL) for radionuclide "i" (except for dissolved an entrained noble gas) in μCi/ml as specified in 10 CFR 20, Appendix B, Table 2

See ODCM, Appendix B, for a listing. In the event that no activity is expected to be discharged, or can be measured in the system, the liquid monitor setpoint should be based on the most restrictive ECL for an "unidentified" mixture or a mixture known not to contain certain radionuclides as given in 10 CFR 20, Appendix B, notes.

2E-04 = The total dissolved and entrained noble gas Technical Specification concentration limit in liquid effluents from the plant (μCi/ml).

Next, the available dilution flow through the discharge tunnel (F_d), or a conservative estimate for it, is divided by the minimum dilution factor (DF_{min}) to determine the maximum allowable discharge flow rate (F_{max}) that the test tanks could be released at without exceeding the ECL limits, assuming no additional radioactive flow paths are discharging at the time of release of the test tanks. Therefore,

$$F_{max} = \frac{F_d}{DF_{min}}$$

Where:

F_{max} = The maximum allowable discharge flow rate from the test tank past the monitor which would equate to the Control concentration limit for the radioactivity mixture determined to be in the test tank (gpm).

F_d = The actual or conservative estimate of the flow rate out of the discharge tunnel (gpm).

For Waste Test Tank (WTT) releases, tritium is expected to be the radionuclide with the highest concentration, and therefore requires the highest dilution flow in order to satisfy the discharge concentration limits. Unlike concentrations of other dissolved or suspended radionuclides, tritium concentrations are not expected to vary because they are unaffected by plant cleanup systems used to reduce or control waste radioactivity levels. As such, events that cause sudden increases in the concentrations of other dissolved or suspended radionuclides, such as changes in waste cleanup efficiencies, crud bursts or failed fuel fractions would not change the tritium concentrations. As long as the minimum required dilution factor (DF_{min}) for all radionuclides present in the liquid waste is satisfied, the alarm setpoint for the Waste Test Tank monitor need only consider the potential changes to the concentrations of detectable gamma-emitting radionuclides. Therefore, the required dilution for detectable activity by the WTT monitor can be determined by applying the definition of DF_{min} (given in equation (5-3)) to only the gamma-emitting radionuclides present in the waste.

$$DF_{min\gamma} = \Sigma (C_{i\gamma}/10ECL_i) \qquad (5\text{-}3a)$$

Where:

$DF_{min\gamma}$ = Minimum required dilution factor necessary to ensure that the sum of the ratios for the concentration of each gamma-emitting radionuclide to the respective ECL value is not greater than 10 (dimensionless).

$C_{i\gamma}$ = Activity concentration of each detectable gamma-emitting radionuclide "i" in the mixture (μCi/ml).

ECL_i = As defined previously.

As in the determination of F_{max} for the total radioactivity mixture, the maximum allowable discharge flow rate that the waste from the test tanks could be released at without exceeding the concentration limit for gamma-emitters, $F_{max\gamma}$, is obtained by dividing the discharge tunnel flow, F_d, by $DF_{min\gamma}$. This determination is based on the assumption that there are no additional discharges of liquid waste at the time of release from the test tanks. Therefore,

$$F_{max\gamma} = F_d / DF_{min\gamma}$$

Where:

$F_{max\gamma}$ = The maximum allowable discharge flow rate from the test tank past the monitor which would equate to the control concentration limit for the gamma radioactivity mixture determined to be in the test tank (gpm).

F_d = The actual or conservative estimate of the flow rate out of the discharge tunnel (gpm).

The selection of the actual discharge flow rate (F_m) from the test tanks compared to the maximum allowable discharge rate based on all radionuclides that are present (F_{max}) and the maximum allowable discharge rate based on only gamma-emitting radionuclides that are present ($F_{max\gamma}$) must satisfy the following:

$$F_m \leq F_{max} * f_{tt} \leq F_{max\gamma} * f_{tt}$$

Where the f_{tt} represents an administrative fraction of the maximum allowable discharge flow from the test tanks. This fraction provides additional margin in meeting ECL limits for non-gamma emitters (such as tritium) at the discharge point to the ocean when other flow paths may contribute to the total site release at the time of tank discharges and minimum dilution flow conditions exist.

With the above conditions on discharge and dilution flow rates satisfied, the alarm/trip setpoint for the monitor which corresponds to the maximum allowable concentration at the point of discharge is determined as follows:

$$R_{setpoint} = f_1 \times \frac{F_d}{F_m \times DF_{min\gamma}} \times \sum C\gamma i \qquad (5\text{-}1)$$

Where:

$R_{setpoint}$ = The maximum allowable alarm/trip setpoint for an instrument response (μCi/ml) that ensures the limiting concentration at the point of discharge is not exceeded.

f_1 = The fraction of the total contribution of ECL at the discharge point to be associated with the test tank effluent pathway, where f_2, f_3, f_4, and f_5, are the fractions for the Turbine Building Sump, Steam Generator Blowdown, Primary Component Cooling and Water Treatment Effluent (Condensate Polishing System) pathways contribution to the total, respectively ($f_1+f_2+f_3+f_4+f_5 \leq 1$). Each of the fractions may be conservatively set administratively such that the sum of the fractions is less than 1. This additional margin can be used to account for the uncertainty in setpoint parameters such as estimated concentration of non gamma emitters that are based on previous composite analyses of the waste stream.

5.1.1.2 Liquid Waste Test Tank Monitor Setpoint Example

The radioactivity concentration of each radionuclide, C_i, in the waste test tank is determined by analysis of a representative grab sample obtained at the radwaste sample sink, and analyzed prior to release for gamma emitters, or as part of a composite analysis for non gamma emitters. The maximum allowable instantaneous effluent concentrations (i.e., ten time the ECL values in 10 CFR 20, Appendix B, Table 2) are used to illustrate a monitor setpoint determination. This setpoint example is based on the following data:

i	C_i (μCi/ml)	ECL_i (μCi/ml)	Ten Times ECL_I (μCi/ml)
Cs-134	2.15E-05	9E-07	9E-06
Cs-137	7.48E-05	1E-06	1E-05
Co-60	2.56E-05	3E-06	3E-05
H-3	1.50E-01	1E-03	1E-02

The minimum required dilution factor for this mix of radionuclides (including beta-emitters) is:

$$DF_{min} = \Sigma \frac{C_i}{10ECL_i} = \frac{2.15E-05}{9E-06} + \frac{7.48E-05}{1E-05} + \frac{2.56E-05}{3E-05} + \frac{1.50E-01}{1E-02} = 26$$

The release flow rate (F_m) from the waste test tanks can be set between 10 and 150 gpm. The cooling water tunnel discharge dilution flow rate (F_d) can typically vary from approximately 8,800 to 412,000 gpm depending on the operating status of the plant. In this example, if the dilution flow (F_d) is taken as 412,000 gpm, the maximum allowable discharge rate (F_{max}) is:

$$F_{max} = \frac{F_d}{DF_{min}}$$
$$= \frac{412,000}{26} \text{ gpm}$$
$$= 15,846 \text{ gpm}$$

Next, the required dilution factor for only gamma emitters in the mix is:

$$DF_{min\gamma} = \Sigma (C_{i\gamma}/10ECL_i) = \frac{2.15E-05}{9E-06} + \frac{7.48E-05}{1E-05} + \frac{2.56E-05}{3E-05} = 11$$

The maximum allowable discharge flow rate ($F_{max\gamma}$) considering only gamma emitters is given as:

$$F_{max\gamma} = \frac{F_d}{DF_{min\gamma}} = \frac{412,000}{11} \text{ gpm} = 37,455 \text{ gpm}$$

With the selected release rate from the test tank set at 150 gpm, and the administrative flow fraction (f_{tt}) assumed in this example to be 0.7, the condition for the control concentration limits is met since:

F_m (equal to 150) < F_{max} (equal to 15,846 gpm) x f_{tt} (set at 0.7)
< $F_{maxγ}$ (equal to 37,455 gpm x F_{tt} (set at 0.7)

$$150 < 11092 < 26219$$

and the monitor response due to the mix of the gamma emitters is:

i	$C\gamma_i$ (μCi/ml)
Cs-134	2.15E-05
Cs-137	7.48E-05
Co-60	2.56E-05
	$\sum C_{\gamma i}$ = 1.22E-04 μCi/ml

Under these conditions, the alarm/trip setpoint for the liquid radwaste discharge monitor is:

$$R_{setpoint} = f_1 \times \frac{F_d}{F_m \times DF_{min\gamma}} \times \sum C\gamma i \qquad (5\text{-}1)$$

μCi/ml ( ) ( ) μCi/ml

$$R_{setpoint} = 0.4 \times \frac{412{,}000}{150 \times 11} \times 1.22E-04$$

$$= 1.22E-02\ \mu Ci/ml$$

In this example, the alarm/trip setpoint of the liquid radwaste discharge monitor can be put at 1.22E-02 μCi/ml above background. For the example, it is assumed that the test tank release pathway will be limited to only 40% of the total site discharge allowable concentration.

5.1.2 Turbine Building Drains Liquid Effluent Monitor (RM-6521)

The Turbine Building drains liquid effluent monitor continuously monitors the Turbine Building sump effluent line. The only sources to the Sump Effluent System are from the secondary steam system. Activity is expected in the Turbine Building Sump Effluent System only if a significant primary-to-secondary leak is present. If a primary-to-secondary leak is present, the activity in the sump effluent system would be comprised of only those radionuclides found in the secondary system, with reduced activity from decay and dilution.

The Turbine Building drains liquid effluent monitor provides alarm and automatic termination of release prior to exceeding ten times the concentration limits specified in 10 CFR 20, Appendix B, Table 2, Column 2 to the environment. The alarm setpoint for this monitor will be determined using the same method as that of the liquid waste test tank monitor if the total sump activity is greater than the ECL, as determined by the most recent grab sample isotopic analysis. If the total activity is less than the ECL, the setpoints of RM-6521 are calculated as follows:

$$\text{High Trip Monitor Setpoint } (\mu Ci/ml) = f_2\,(DF')\,(\text{"unidentified mix ECL"}\ (\mu Ci/ml)) \qquad (5\text{-}21)$$

where:

$$DF' = \frac{\text{Circulating water flow rate (gpm)}}{\text{Flow rate pass-monitor (gpm)}}$$

unidentified mix ECL = most restrictive ECL value (μCi/ml) for an unidentified mixture or a mixture known not to contain certain radionuclides as given in 10 CFR 20, Appendix B, Notes.

f_2 = $1 - (f_1 + f_3 + f_4 + f_5)$; where the f values are described above

In addition, a warning alarm setpoint can be determined by multiplying the high trip alarm point by an administratively selected fraction (as an example, 0.25).

$$\begin{pmatrix}\text{Warning Alarm}\\ \text{Monitor Setpoint}\\ (\mu Ci/ml)\end{pmatrix} = \begin{pmatrix}\text{High Trip}\\ \text{Monitor Sepoint}\end{pmatrix} (0.25)$$

5.1.3 Steam Generator Blowdown Liquid Sample Monitor (RM-6519)

The steam generator blowdown liquid sample monitor is used to detect abnormal activity concentrations in the steam generator blowdown flash tank liquid discharge.

The alarm setpoint for the steam generator blowdown liquid sample monitor, when liquid is to be discharged from the site, will be determined using the same approach as the Turbine Building drains liquid effluent monitor.

For any liquid monitor, in the event that no activity is expected to be discharged, or can be measured in the system, the liquid monitor setpoint should be based on the most restrictive ECL for an "unidentified" mixture or a mixture known not to contain certain radionuclides given in 10 CFR 20, Appendix B notes.

5.1.4 PCCW Head Tank Rate-of-Change Alarm Setpoint

A rate-of-change alarm on the liquid level in the Primary Component Cooling Water (PCCW) head tank will work in conjunction with the PCCW radiation monitor to alert the operator in the Main Control Room of a leak to the Service Water System from the PCCW System. For the rate-of-change alarm, a setpoint is selected based on detection of an activity level equivalent to 10^{-8} μCi/ml in the discharge of the Service Water System. The activity in the PCCW is determined in accordance with the liquid sampling and analysis program described in Part A, Table A.6.1-1 of the ODCM and is used to determine the setpoint.

The rate-of-change alarm setpoint is calculated from:

$$RC_{set} = 1x10^{-8} \bullet SWF \bullet \frac{1}{PCC} \qquad (5\text{-}23)$$

$$\left(\frac{gal}{hr}\right) = \left(\frac{\mu Ci}{ml}\right)\left(\frac{gal}{hr}\right)\left(\frac{ml}{\mu Ci}\right)$$

where:

RC_{set} = The setpoint for the PCCW head tank rate-of-change alarm (in gallons per hour).

$1x10^{-8}$ = The minimum detectable activity level in the Service Water System due to a PCCW to SWS leak (μCi/ml).

SWF ≐ Service Water System flow rate (in gallons per hour).

PCC = Primary Component Cooling Water measured (decay corrected) gross radioactivity level (μCi/ml).

As an example, assume a PCCW activity concentration of $1x10^{-5}$ μCi/ml with a service water flow rate of only 80 percent of the normal flow of 21,000 gpm. The rate-of-change setpoint is then:

$$RC_{set} = 1x10^{-8}\ \frac{\mu Ci}{ml} \bullet 1.0x10^{6}\ gph\ (1/1x10^{-5}\ \frac{\mu Ci}{ml})$$

$$RC_{set} = 1000\ gph$$

As a result, for other PCCW activities, the RC_{set} which would also relate to a detection of a minimum service water concentration of $1x10^{-8}$ μCi/ml can be found from:

$$RC_{set} = \frac{1x10^{-5}\ x\ \mu Ci/ml\ x\ 1000\ gph}{PCC} \qquad (5\text{-}24)$$

5.1.5 PCCW Radiation Monitor

The PCCW radiation monitor will alert the operator in the Main Control Room of a leak to the PCCW System from a radioactively contaminated system.

The PCCW radiation monitor alarm is based on a trend of radiation levels in the PCCW System. The background radiation of the PCCW is determined by evaluating the radiation levels over a finite time period. The alert alarm setpoint is set at 1.5 x background, and the high alarm setpoint is set at 2 x background, per Technical Specification Table 3.3-6.

5.1.6 Water Treatment Liquid Effluent (CPS Rad Monitor RM-6473)

The Water Treatment Liquid Effluent monitor is used to detect abnormal activity concentrations in waste liquid discharges to the Transition Structure from tank Tk-32 (CPS Neutralization Tank), tank Tk-274 (Low Conductivity Tank) and megarinse wash water from the Condensate Polishing System (CPS) demineralizer regeneration cycle.

The CPS Rad monitor provides alarm and automatic termination of release prior to exceeding the concentration limits specified in 10CFR20, Appendix B, Table 2, Column 2 to the environment. The alarm setpoint for this monitor will be determined using the same method as that of the Liquid Waste Test Tank Monitor (see Section 5.1.1.1) if the total activity expected to be discharged is greater than 10 percent of ECL, as determined by the most recent grab sample isotopic analysis. If the total activity is less than 10 percent of ECL, the setpoints of RM-6473 can be calculated as follows:

High Trip Monitor Setpoint (μCi/ml) = f_5 (DF') ("unidentified mix ECL" (μCi/ml))

where:

$$DF' = \frac{\textbf{Circulating water flow rate (gpm)}}{\textbf{Flow rate pass- monitor (gpm)}}$$

unidentified mix ECL = most restrictive ECL value (μCi/ml) for an unidentified mixture or a mixture known not to contain certain radionuclides as given in 10CFR20, Appendix B, Notes.

f_5 = $1 - (f_1 + f_2 + f_3 + f_4)$; where the f values are described in Section 5.1.1.1 above.

In addition, a warning alarm setpoint can be determined by multiplying the high trip alarm point by an administratively selected fraction (as an example, 0.25).

$$\begin{pmatrix}\textbf{Warning Alarm}\\ \textbf{Monitor Setpoint}\\ \textbf{(}\mu\textbf{Ci/ml)}\end{pmatrix} = \begin{pmatrix}\textbf{High Trip}\\ \textbf{Monitor Sepoint}\end{pmatrix} \textbf{(0.25)}$$

5.2 Gaseous Effluent Instrumentation Setpoints

Part A Control C.5.2 requires that the radioactive gaseous effluent instrumentation in Table A.5.2-1 of Part A have their alarm setpoints set to insure that Part A Control C.7.1.1 is t exceeded.

5.2.1 Plant Vent Wide-Range Gas Monitors (RM-6528-1, 2 and 3)

The plant vent wide-range gas monitors are shown on Figure B.6-2.

5.2.1.1 Method to Determine the Setpoint of the Plant Vent Wide Range Gas Monitors (RM-6528-1, 2 and 3)

The maximum allowable setpoint for the plant vent wide-range gas monitor (readout response in μCi/sec) is set by limiting the off-site noble gas dose rate to the total body or to the skin, and denoted $R_{setpoint}$. $R_{setpoint}$ is the lesser of:

$$R_{tb} = 588 \frac{1}{DFB_c} f_v \qquad (5\text{-}5)$$

$$\mu Ci/sec = \left(\frac{mrem\text{-}\mu Ci\text{-}m^3}{yr\text{-}pCi\text{-}sec}\right)\left(\frac{pCi\text{-}yr}{mrem\text{-}m^3}\right)$$

and:

$$R'_{skin} = 3{,}000 \frac{1}{DF'_c} f_v \qquad (5\text{-}6)$$

$$\mu Ci/sec = \left(\frac{mrem}{yr}\right)\left(\frac{\mu Ci\text{-}yr}{mrem\text{-}sec}\right)$$

where:

R_{tb} = Response of the monitor at the limiting total body dose rate (μCi/sec)

588 = $\frac{500}{(1E+06)\ (8.5E-07)}\left(\frac{mrem\text{-}\mu Ci\text{-}m^3}{yr\text{-}pCi\text{-}sec}\right)$

500 = The offsite limiting total body dose rate (mrem/yr) from all release points

1E+06 = Number of pCi per μCi (pCi/μCi)

8.5E-07 = $[X/Q]^{\gamma}$, maximum off-site long-term average gamma atmospheric dispersion factor for primary vent stack releases (sec/m^3)

DFB_c = Composite total body dose factor (mrem-m^3/pCi-yr)

$$= \frac{\Sigma \dot{Q}_i DFB_i}{\Sigma \dot{Q}_i} \qquad (5\text{-}7)$$

f_v = The fraction of the offsite limiting total body dose rate to be administratively assigned to the plant vent ($f_v \leq 1 - f_g$, where f_g is the fraction of the limiting dose rate to be assigned to monitored ground level releases)

$\dot{Q}_i$ = The relative release rate of noble gas "i" in the mixture, for each noble gas identified or postulated to be in the off-gas (µCi/sec)

DFB_i = Total body dose factor (see Table B.1-10) (mrem-m^3/pCi-yr)

R_{skin} = Response of the monitor at the limiting skin dose rate (µCi/sec)

3,000 = The offsite limiting skin dose rate (mrem/yr)

DF'_c = Composite skin dose factor (mrem-sec/µCi-yr)

$$= \frac{\Sigma \dot{Q}_i DF'_{i(e)}}{\Sigma \dot{Q}_i} \qquad (5\text{-}8)$$

$DF'_{i(e)}$ = Combined skin dose factor for elevated release point (see Table B.1-10) (mrem-sec/µCi-yr)

5.2.1.2 Plant Vent Wide Range Gas Monitor Setpoint Example for Limiting Case

The following setpoint example for the plant vent wide range gas monitors demonstrates the use of equations 5-5 and 5-6 for determining setpoints. Evaluations of potential releases rates associated with the limiting offsite dose rates (Control C.7.1.1.a) have been made considering different noble gas mixes related to normal operations, observed periods with fuel defects, and potential UFSAR accident conditions. The bounding noble gas mix case for setpoint alarm indications was found to be related to projected fuel gap activity at the time of shutdown from power operations (UFSAR Table 15.7-20). By setting the maximum alarm setpoint in accordance with this assumed mix, other potential or realistic release conditions will not create an effluent discharge at or above the limiting offsite dose rates without the monitor going into alarm.

This limiting setpoint example is based on the following data (see Table B.1-10 for $DFB_{i(e)}$ and $DF'_{i(e)}$):

i	$\dot{Q}_i$ $(\frac{\mu Ci}{sec})$	DFB_i $(\frac{mrem\text{-}m^3}{pCi\text{-}yr})$	$DF'_{i(e)}$ $(\frac{mrem\text{-}sec}{\mu Ci\text{-}yr})$
Xe-138	2.52E+02	8.83E-03	1.20E-02
Kr-87	7.90E+01	5.92E-03	1.38E-02
Kr-88	1.15E+02	1.47E-02	1.62E-02
Kr-85m	4.49E+01	1.17E-03	2.35E-03
Xe-135	6.82E+01	1.81E-03	3.33E-03
Xe-133	3.23E+02	2.94E-04	5.83E-04
Kr-85	4.13E+00	1.61E-05	1.11E-03
Xe-131m	1.15E+00	9.15E-05	5.37E-04
Xe-133m	4.67E+01	2.51E-04	1.12E-03
Xe-135m	6.64E+01	3.12E-03	3.74E-03

$$DFB_c = \frac{\Sigma\ \dot{Q}_i\, DFB_i}{\Sigma\ \dot{Q}_i} \qquad (5\text{-}7)$$

$$\Sigma\ \dot{Q}_i\, DFB_i = (2.52E{+}02)(8.83E{-}03) + (7.90E{+}01)(5.92E{-}03) + (1.15E{+}02)\,(1.47E{-}02)$$

$$+ (4.49E{+}01)(1.17E{-}03) + (6.82E{+}01)(1.81E{-}03) + (3.23E{+}02)\,(2.94E{-}04)$$

$$+ (4.13E{+}00)(1.61E{-}05) + (1.15E{+}00)(9.15E{-}05) + (4.67E{+}01)\,(2.51E{-}04)$$

$$+ (6.64E{+}01)\ (3.12E{-}03)$$

$$= 4.86E{+}00\ (\mu Ci\text{-}mrem\text{-}m^3/sec\text{-}pCi\text{-}yr)$$

$$\Sigma\ \dot{Q}_i = 2.52E{+}02 + 7.90E{+}01 + 1.15E{+}02 + 4.49E{+}01 + 6.82E{+}01$$

$$+ 3.23E{+}02 + 4.14E{+}00 + 1.16E{+}00 + 4.67E{+}01 + 6.64E{+}01$$

$$= 1.00E{+}03\ \mu Ci/sec$$

$$DFB_c = \frac{4.86E{+}00}{1.00E{+}03}$$

$$= 4.86E{-}03\ (mrem\text{-}m^3/pCi\text{-}yr)$$

and therefore:

$$R_{tb} = 588\ \frac{1}{DFB_c}\ f_v \qquad (5\text{-}5)$$

$$= (588)\ \frac{1}{(4.86E{-}03)}\ 0.7$$

$$= 8.47E{+}04\ \mu Ci/sec$$

and next;

$$DF_c' = \frac{\Sigma\ \dot{Q}_i\, DF_i'}{\Sigma\ \dot{Q}_i} \qquad (5\text{-}8)$$

$$\Sigma\ \dot{Q}_i\, DF_i' = (2.52E{+}02)(1.20E{-}02) + (7.90E{+}01)(1.38E{-}02) + (1.15E{+}02)\,(1.62E{-}02)$$

$$+ (4.49E{+}01)(2.35E{-}03) + (6.82E{+}01)(3.33E{-}03) + (3.23E{+}02)\,(5.83E{-}04)$$

$$+ (4.13E{+}00)(1.11E{-}03) + (1.15E{+}00)(5.37E{-}04) + (4.67E{+}01)\,(1.12E{-}03)$$

$$+ (6.64E{+}01)\,(3.74E{-}03)$$

$$= 6.80E{+}00\ (\mu Ci\text{-}mrem\text{-}sec/sec\text{-}\mu Ci\text{-}yr)$$

$$DF'_c = \frac{6.80E+00}{1.00E+03}$$

$$= 6.80E-03 \quad (mrem-sec/\mu Ci-yr)$$

and therefore:

$$R_{skin} = 3{,}000\,\frac{1}{DF_c'}\ f_v \qquad (5\text{-}6)$$

$$= (3{,}000) \quad \left(\frac{1}{6.80E-03}\right)\ 0.7$$

$$= 3.09E{+}05\ \mu Ci/sec$$

The setpoint, $R_{setpoint}$, is the lesser of R_{tb} and R_{skin}. For the limiting noble gas mixture, R_{tb} is less than R_{skin}, indicating that the total body dose rate is more restrictive. Therefore, the plant vent wide-range gas monitor should be set at no more than 8.47E+04 µCi/sec above background, or at some administrative fraction of the above value.

5.2.2 Waste Gas System Monitors (RM-6504 and RM-6503)

Process radiation monitors in the waste gas system provide operational information on the performance of the system before its discharge is combined and diluted with other gas flows routed to the plant vent for release to the environment.

The setpoints for the waste gas system monitors are administratively set as small multiples of the expected activity concentration to provide operational control over unexpected changes in gas discharges from the system. Typically, the alert alarm setpoint for both monitors is placed at 1.5 times the expected activity concentration passing the monitor, with the high alarm trip set at 2.0 times the expected concentration flow.

Under all conditions, the maximum allowable alarm trip shall not exceed a concentration equivalent to 62.5 $\mu Ci/cm^3$. This concentration limit, based on system design flow of 1.2 cfm, assures that any release from the waste gas system to the plant vent will not exceed the site boundary dose rate limits of Part A Control C.7.1.1.a.

5.2.3 Main Condenser Air Evacuation Monitor (RM-6505)

The process radiation monitor on the main condenser air evacuation system provides operational information about the air being discharged. The discharge typically occurs either directly from the turbine building during start up (hogging mode) or through the plant vent during normal operations. During maintenance activities or other temporary operational conditions, discharges to the turbine roof may also occur. This process monitor is also used as an indicator of potential releases from the Turbine Gland Seal Condenser exhaust. Early indications of a potential release (i.e., monitor count rate at twice the normal background) should be evaluated by collecting a grab sample of the exhausts from both the main condenser and the Turbine Gland Seal Condenser.

The operational setpoints for the air evacuation monitor are administratively set as small multiples of the expected background response of the detector to provide operational control over unexpected changes in the activity discharged from the system. Typically, the alert setpoint is 1.5 times background, with the high alarm set at 2 times background.

Maximum allowable setpoint determinations assure that the site boundary dose rate limits of Part A Control C.7.1.1.a will not be exceeded. For the air evacuation detector an efficiency of 1.87E + 08 $cpm\text{-}cm^3/\mu Ci$, (the AR–41 response value determined by HPSTID 20-021), flow rates of 10 to 50 cfm and 10,000 cfm for the normal and hogging modes of operation, respectively, and assuming that all the response is due to the most restrictive noble gas mixture associated with fuel gap activity inventory at the end of power operations (same mixture as used for the limiting mixture for the plant vent Wide Range Gas Monitor setpoint given in section 5.2.1.2), the following examples illustrate the calculation of the limiting setpoint for different operational conditions.

Case 1: For start-up operations (i.e., 10,000 cfm hogging flow to the Turbine Building roof), the maximum allowable alarm setpoint is calculated as:

$$R_{AE} = 147 \frac{1}{DFB_c} f_g f_{gland}$$

where :

R_{AE} = Release rate equivalent to the assigned fraction of the limiting offsite total body dose rate (μCi/sec)

$$147 = \frac{500}{(1E+06)(3.4E-06)} \left(\frac{mrem - \mu Ci - m^3}{yr - pCi - sec}\right)$$

500 = The site boundary limiting total body dose rate (mrem/yr) from all release points

1E+06 = Number of pCi per μCi (pCi/μCi)

3.4E-06 = Maximum off-site long-term average gamma atmospheric dispersion factor for ground level releases (sec/m^2)

DFB_c = Composite total body dose factor (defined for the WRGM in Section 5.2.1.2 to be equal to 4.86E-03 [$mrem-m^3$ /pCi-yr] for the limiting fuel gap activity mix)

f_g = The fraction of the site boundary total body dose rate limit to be administratively assigned to monitored ground level releases (for this illustration = 0.3) such that the combination of the plant vent fraction (f_v) and ground fraction (f_g) is less than or equal to 1 ($f_g \leq 1 - f_v$).

f_{gland} = Release reduction factor to be administratively assigned to account for potential unmonitored contributions from the Turbine Gland Seal Condenser exhaust (for this illustration = 0.7).

$$R_{AE} = 147 \frac{1}{4.86E-03} (0.3)(0.7)$$

= 6.36E+03 μCi/sec release rate limit

and for the 10,000 cfm (4.72E+06 cm^3/sec) exhaust flow, the count rate response of the air evacuation monitor would be:

$$\text{Monitor Response} = \frac{R_{AE}}{4.72E+06 cm^3/sec} 1.87E+08 \text{ cpm-cm3/}\mu Ci$$

= (6.36E+03) (1.87E+08) / (4.72E+06)

= 2.520E + 05 cpm

Case 2: As an extension of Case 1 which assumed the full startup hogging flow was released to the Turbine Building roof, maintenance requirements could direct normal operating main condenser offgas flow (assume 50 cfm or equivalent 2.36E+04 cm3/sec) to the Turbine Building Roof (ground level release point) instead of the elevated main plant vent. In this situation, the same release rate limit as calculated above (i.e., 6.36E+03 μCi/sec) would apply. However, the reduced gas flow from 10,000 cfm down to 50 cfm would permit a higher alarm setpoint to be used.

$$\text{Monitor Response} = \frac{R_{AE}}{2.36E+04 \text{cm}^3/\text{sec}} \; 1.87E+08 \text{ cpm-cm}^3/\mu\text{Ci}$$

$$= (6.36E+03)\,(1.87E+08) / (2.36E+04)$$

$$= 5.04E+07 \text{ cpm}$$

Case 3: For normal operations which direct main condenser offgas flow (assume 50 cfm or equivalent 2.36E+04 cm3/sec) to be released to the atmosphere via the main plant vent, the maximum allowable alarm setpoint would be:

$$R_{AE} = 588 \; \frac{1}{DFB_c} \; f_v \; f_{gland}$$

where :

R_{AE} = Release rate equivalent to the assigned fraction of the limiting offsite total body dose rate (μCi/sec)

$$588 = \frac{500}{(1E+06)\,(8.5E-07)} \left(\frac{\text{mrem-}\mu\text{Ci-m}^3}{\text{yr-pCi-sec}}\right)$$

5.8E-07 = Maximum off-site long-term average gamma atmospheric dispersion factor for elevated (mixed mode) releases (sec/m^2)

DFBc = Composite total body dose factor (defined for the WRGM in Section 5.2.1.2 to be equal to 4.86E-03 [mrem-m3 /pCi-yr] for the limiting fuel gap activity mix)

f_{gland} = Same as listed above (i.e., 0.7)

f_v = The fraction of the site boundary total body dose rate limit to be administratively assigned to plant vent releases such that the combination of the plant vent fraction (f_v) and ground fraction (f_g) is less than or equal to 1 ($f_v \leq 1 - f_g$). For the case that main condenser offgas is discharged to the main plant vent, there is no ground release fraction to be assigned (i.e., $f_g = 0$), and f_v maybe set at 1.

$$R_{AE} = 588 \; \frac{1}{4.86E-03} \; 0.7$$

= 8.47E+04 μCi/sec release rate limit

and for the 50 cfm (2.36E+06 cm3/sec) Main Condenser offgas exhaust flow, the count rate response of the air evacuation monitor would be:

$$\text{Monitor Response} = \frac{R_{AE}}{2.36E+06 cm^3/sec} \; 1.87E+08 \text{ cpm-cm}^3/\mu Ci$$

$$= (8.47E+04)\,(1.87E+08) / (2.36E+04)$$

$$= 6.71E+08 \text{ cpm}$$

The operation of the Main Condenser Evacuation System assumes 670 lbs./hour of steam flow through the Turbine Gland Seal Condenser exhaust (very small fraction of total steam flow), 1.5E+07 lbs./hour steam flow to the main condenser, and that the Turbine Gland Seal Condenser exhaust mostly air at a flow rate of 1,800 cfm which goes directly to the Turbine Building Vents (does not pass RM-6505). The main condenser offgas which goes past the Air Evacuation monitor during power operations is combined with other plant ventilation and process gas streams before being monitored by the WRGM and discharged to the atmosphere via the Plant Vent as a single release point.

The maximum allowable setpoints during startup and normal power operations may be recalculated based on identified changes in detector efficiency, discharge flow rate, radionuclide mix distribution, or administrative apportionment of potential contributions from the plant vent and ground level release points following the methods identified in Part B, Section 8.5.

6.0 LIQUID AND GASEOUS EFFLUENT STREAMS, RADIATION MONITORS AND RADWASTE TREATMENT SYSTEMS

Figure B.6-1 shows the liquid effluent streams, radiation monitors and the appropriate Liquid Radwaste Treatment System. Figure B.6-2 shows the gaseous effluent streams, radiation monitors and the appropriate Gaseous Radwaste Treatment System.

For more detailed information concerning the above, refer to the Seabrook Station Final Safety Analysis Report, Sections 11.2 (Liquid Waste System), 11.3 (Gaseous Waste System) and 11.5 (Process and Effluent Radiological Monitoring and Sampling System).

The turbine gland seal condenser exhaust iodine and particulate gaseous releases will be determined by continuously sampling the turbine gland seal condenser exhaust. The noble gas releases will be determined by periodic noble gas grab samples. A ratio of main condenser air evacuation exhaust and turbine gland seal condenser exhaust noble gas will be determined periodically.

Figure B.6-1
Liquid Effluent Streams, Radiation Monitors, and Radwaste Treatment System at Seabrook Station

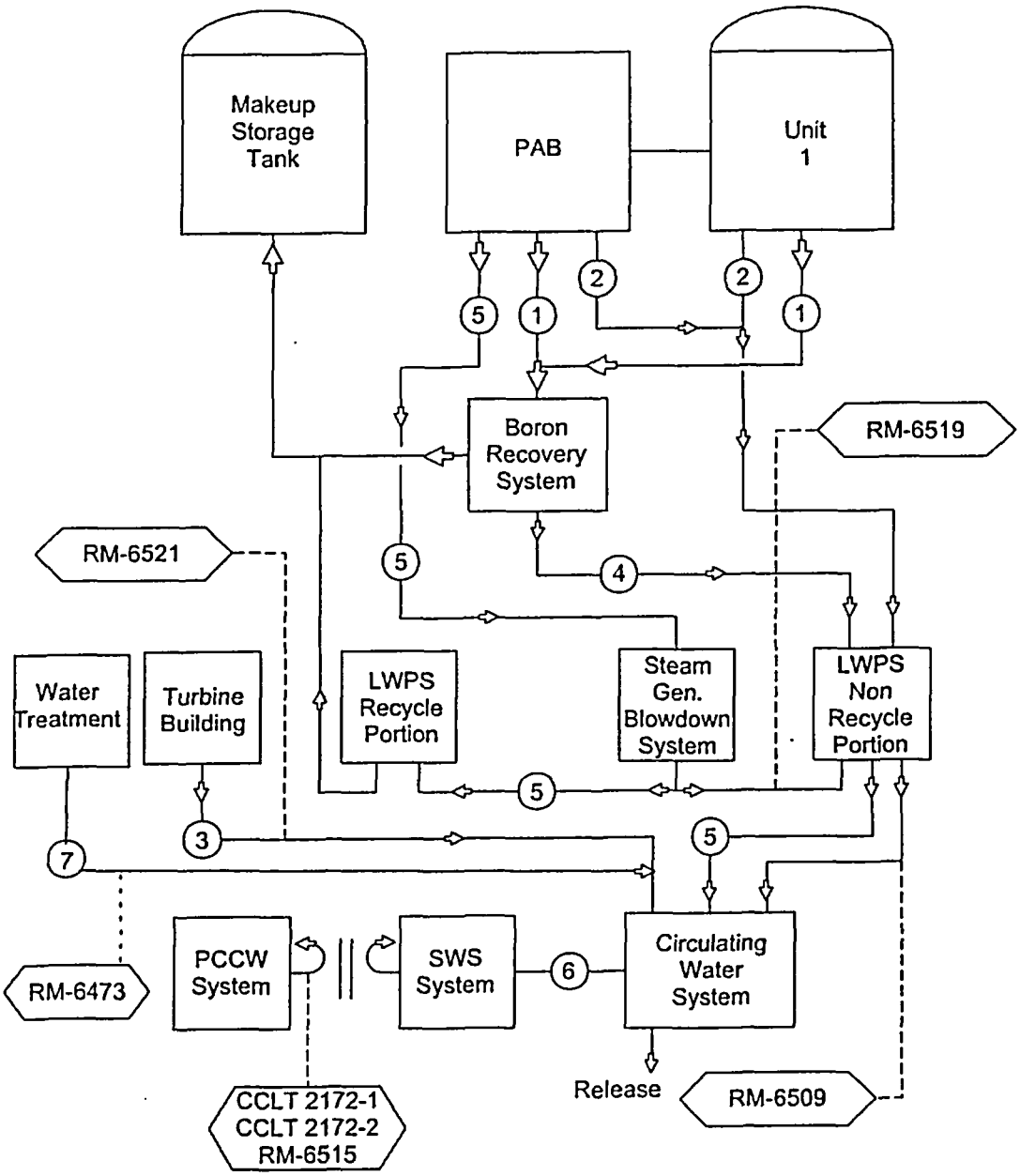

Figure B.6-2
Gaseous Effluent Streams, Radiation Monitors, and Radwaste Treatment System at Seabrook Station

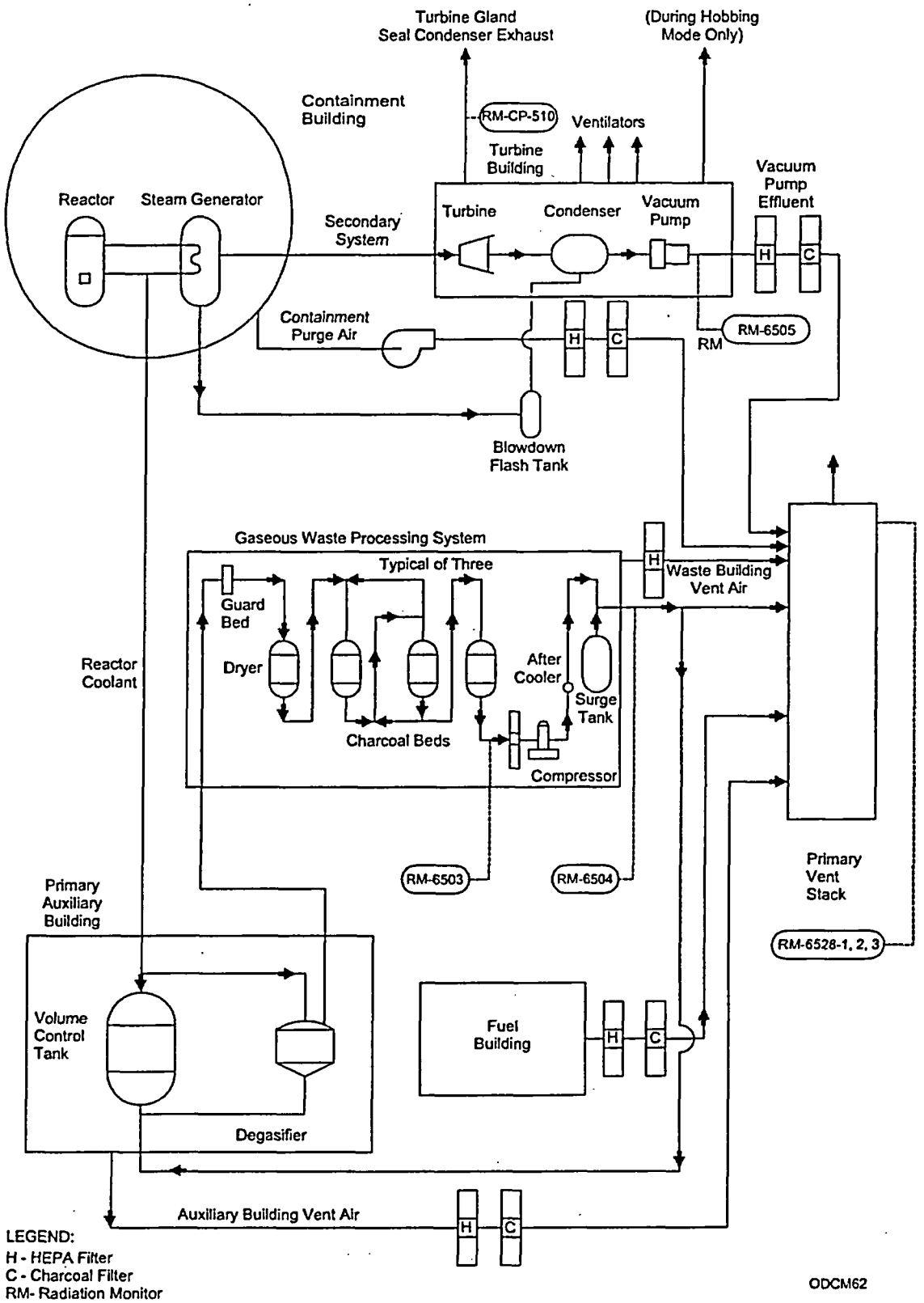

7.0 BASES FOR DOSE CALCULATION METHODS

7.1 *Liquid Release Dose Calculations*

This section serves: (1) to document the development and conservative nature of Method I equations to provide background information to Method I users, and (2) to identify the general equations, parameters and approaches to Method II-type dose assessments. Appendix C provides the bases for the EMS software which is used to implement the dose and dose rate calculations indicated as Method IA.

Method I may be used to show that the Part A RECP which limit off-site total body dose from liquids (C.6.2.1 and C.6.3.1) have been met for releases over the appropriate periods. The quarterly and annual dose limits in Part A Control C.6.2.1 are based on the ALARA design objectives in 10CFR50, Appendix I Subsection II A. The minimum dose values noted in Part A Control C.6.3.1 are "appropriate fractions," as determined by the NRC, of the design objective to ensure that radwaste equipment is used as required to keep off-site doses ALARA.

Method I was developed such that "the actual exposure of an individual.... is unlikely to be substantially underestimated" (10CFR50, Appendix I). The definition, below, of a single "critical receptor" (a hypothetical or real individual whose behavior results in a maximum potential dose) provides part of the conservative margin to the calculation of total body dose in Method I. Method II allows that actual individuals, associated with identifiable exposure pathways, be taken into account for any given release. In fact, Method I was based on a Method II analysis for a critical receptor assuming all principal pathways present instead of any real individual. That analysis was called the "base case;" it was then reduced to form Method I. The general equations used in the base case analysis are also used as the starting point in Method II evaluations. The base case, the method of reduction, and the assumptions and data used are presented below.

The steps performed in the Method I derivation follow. First, the dose impact to the critical receptor [in the form of dose factors DFL_{itb} (mrem/μCi)] for a unit activity release of each radioisotope in liquid effluents was derived. The base case analysis uses the general equations, methods, data and assumptions in Regulatory Guide 1.109 (Equations A-3 and A-7, Reference A). The liquid pathways contributing to an individual dose are due to consumption of fish and invertebrates, shoreline activities, and swimming and boating near the discharge point. A nominal operating plant discharge flow rate of 918 ft^3/sec was used with a mixing ratio of 0.10. The mixing ratio of 0.10 corresponds to the minimum expected prompt dilution or near-field mixing zone created at the ocean surface directly above the multiport diffusers. (Credit for additional dilution to the outer edge of the prompt mixing zone which corresponds to the 10F surface isotherm (mixing ratio .025) can be applied in the Method II calculation for shoreline exposures only since the edge of this isotherm typically does not reach the shoreline receptor points during the tidal cycle. The mixing ratio for aquatic food pathways in Method II assessments shall be limited to the same value (0.10) as applied in Method I for near-field mixing, or prompt dilution only.

The requirements for the determination of radiological impacts resulting from releases in liquid effluents is derived from 10CFR50, Appendix I. Section III.A.2 of Appendix I indicates that in making the assessment of doses to hypothetical receptors, "The Applicant may take account of any real phenomenon or factors actually affecting the estimate of radiation exposure, including the characteristics of the plant, modes of discharge of radioactive materials, physical processes tending to attenuate the quantity of radioactive material to which an individual would be exposed, and the effects of averaging exposures over time during which determining factors may fluctuate." In accessing the liquid exposure pathways that characterize Seabrook Station, the design and physical location of the Circulating Water Discharge System needs to be considered within the scope of Appendix I.

Seabrook utilizes an offshore submerged multiport diffuser discharger for rapid dissipation and mixing of thermal effluents in the ocean environment. The 22-port diffuser section of the Discharge System is located in approximately 50 to 60 feet of water with each nozzle 7 to 10 feet above the sea floor. Water is discharged in a generally eastward direction away from the shoreline through the multiport diffuser, beginning at a location over one mile due east of Hampton Harbor inlet. This arrangement effectively prevents the discharge plume (at least to the 1 degree or 40 to 1 dilution isopleth) from impacting the shoreline over the tidal cycle.

Eleven riser shafts with two diffuser nozzles each form the diffuser and are spaced about 100 feet apart over a distance of about 1,000 feet. The diffusers are designed to maintain a high exit velocity of about 7.5 feet per second during power operations. Each nozzle is angled approximately 20 degrees up from the horizontal plane to prevent bottom scour. These high velocity jets passively entrain about ten volumes of fresh ocean water into the near field jet mixing region before the plume reaches the water surface. This factor of 10 mixing occurs in a very narrow zone of less than 300 feet from the diffuser by the time the thermally buoyant plume reaches the ocean surface. This high rate of dilution occurs within about 70 seconds of discharge from the diffuser nozzles.

The design of the multiport diffuser to achieve a 10 to 1 dilution in the near field jet plume, and a 40 to 1 dilution in the near mixing zone associated with the 1 degree isotherm, has been verified by physical model tests (reference "Hydrothermal Studies of Bifurcated Diffuser Nozzles and Thermal Backwashing - Seabrook Station," Alden Research Laboratories, July 1977).

During shutdown periods, when the plant only requires service water cooling flow, the high velocity jet mixing created by the normal circulating water flow at the diffuser nozzles is reduced. However, mixing within the discharge tunnel water volume is significantly increased (factor of about 5) due to the long transit time (approximately 50 hours) for batch waste discharged from the plant to travel the three miles through the 19-foot diameter tunnels to the diffuser nozzles. Additional mixing of the thermally buoyant effluent in the near field mixing zone assures that an equivalent overall 10 to 1 dilution occurs by the time the plume reaches the ocean surface.

The dose assessment models utilized in the ODCM are taken from NRC Regulatory Guide 1.109. The liquid pathway equations include a parameter (M_p) to account for the mixing ratio (reciprocal of the dilution factor) of effluents in the environment at the point of exposure. Table 1, in Regulatory Guide 1.109, defines the point of exposure to be the location that is anticipated to be occupied during plant lifetime, or have potential land and water usage and food pathways as could actually exist during the term of plant operation. For Seabrook, the potable water and land irrigation pathways do not exist since saltwater is used as the receiving water body for the circulating water discharge. The three pathways that have been factored into the assessment models are shoreline exposures, ingestion of invertebrates, and fish ingestion.

With respect to shoreline exposures, both the mixing ratios of 0.1 and 0.025 are extremely conservative since the effluent plume which is discharged over one mile offshore never reaches the beach where this type of exposure could occur. Similarly, bottom dwelling invertebrates, either taken from mud flats near the shoreline or from the area of diffuser, are not exposed to the undiluted effluent plume. The shore area is beyond the reach of the surface plume of the discharge, and the design of the upward directed discharge nozzles along with the thermal buoyancy of the effluent, force the plume to quickly rise to the surface without affecting bottom organisms.

Consequentially, the only assumed exposure pathway which might be impacted by the near field plume of the circulating water discharge is finfish. However, the mixing ratio of 0.1 is very conservative because fish will avoid both the high exit velocity provided by the discharge nozzles and the high thermal temperature difference between the water discharged from the diffuser and the ambient water temperature in the near field. In addition, the dilution factor of 10 is achieved within 70 seconds of discharge and confined to a very small area, thus prohibiting any significant quantity of fish from reaching equilibrium conditions with radioactivity concentrations created in the water environment.

The mixing ratio of 0.025, which corresponds to the 1 degree thermal near field mixing zone, is a more realistic assessment of the dilution to which finfish might be exposed. However, even this dilution credit is conservative since it neglects the plant's operational design which discharges radioactivity by batch mode. Batch discharges are on the order of only a few hours in duration several times per week and, thus, the maximum discharge concentrations are not maintained in the environment long enough to allow fish to reach equilibrium uptake concentrations as assumed in the dose assessment modeling. Not withstanding the above expected dilution credit afforded at the 1 degree isotherm, all Method II aquatic food pathway dose calculations shall conservatively assume credit for prompt dilution only with an $M_p = 0.10$. When dose impacts from the fish and invertebrate pathways are then added to the conservative dose impacts derived for shoreline exposures, the total calculated dose is very unlikely to have underestimated the exposure to any real individual.

The recommended value for dilution of 1.0 given in NUREG-0133 is a simplistic assumption provided so that a single model could be used with any plant design and physical discharge arrangement. For plants that utilize a surface canal-type discharge structure where little entrainment mixing in the environment occurs, a dilution factor of 1.0 is a reasonable assumption. However, in keeping with the guidance provided in Appendix I to 10CFR50, Seabrook has determine site-specific mixing ratios which factor in its plant design.

The transit time used for the aquatic food pathway was 24 hours, and for shoreline activity 0.0 hours. Table B.7-1 outlines the human consumption and use factors used in the analysis. The resulting, site-specific, total body dose factors appear in Table B.1-11. Appendix A provides an example of the development of a Method I liquid dose conversion factor for site-specific conditions at Seabrook.

7.1.1 Dose to the Total Body

For any liquid release, during any period, the increment in total body dose from radionuclide "i" is:

$$\Delta D_{tb} = k Q_i DFL_{itb}$$

$$(\text{mrem})\ ()\ (\mu\text{Ci})\left(\frac{\text{mrem}}{\mu\text{Ci}}\right) \qquad (7\text{-}1)$$

where:

DFL_{itb} = Site-specific total body dose factor (mrem/μCi) for a liquid release. It is the highest of the four age groups. See Table B.1-11.

Q_i = Total activity (μCi) released for radionuclide "i".

k = $918/F_d$ (dimensionless); where F_d is the average dilution flow of the Circulating Water System at the point of discharge from the multiport diffuser (in ft^3/sec).

Method I is more conservative than Method II in the region of the Part A dose limits because the dose factors DFL_{itb} used in Method I were chosen for the base case to be the highest of the four age groups (adult, teen, child and infant) for that radionuclide. In effect each radionuclide is conservatively represented by its own critical age group.

7.1.2 Dose to the Critical Organ

The methods to calculate maximum organ dose parallel to the total body dose methods (see Part B, Section 7.1.1).

For each radionuclide, a dose factor (mrem/μCi) was determined for each of seven organs and four age groups. The largest of these was chosen to be the maximum organ dose factor (DFL_{imo}) for that radionuclide. DFL_{imo} also includes the external dose contribution to the critical organ.

For any liquid release, during any period, the increment in dose from radionuclide "i" to the maximum organ is:

$$\Delta D_{mo} = k Q_i DFL_{imo}$$

$$(\text{mrem})\ ()\ (\mu\text{Ci})\left(\frac{\text{mrem}}{\mu\text{Ci}}\right) \qquad (7\text{-}2)$$

where:

DFL_{imo} = Site-specific maximum organ dose factor (mrem/μCi) for a liquid release. See Table B.1-11.

Q_i = Total activity (μCi) released for radionuclide "i".

k = $918/F_d$ (dimensionless); where F_d is the average dilution flow of the Circulating Water System at the point of discharge from the multiport diffuser (in ft^3/sec).

Table B.7-1
Usage Factors for Various Liquid Pathways at Seabrook Station

(From Reference A, Table E-5*, except as noted. Zero where no pathway exists)

AGE	VEG.	LEAFY VEG.	MILK	MEAT	FISH	INVERT.	POTABLE WATER	SHORELINE	SWIMMING**	BOATING**
	(KG/YR)	(KG/YR)	(LITER/YR)	(KG/YR)	(KG/YR)	(KG/YR)	(LITER/YR)	(HR/YR)	(HR/YR)	(HR/YR)
Adult	0.00	0.00	0.00	0.00	21.00	5.00	0.00	334.00***	8.00	52.00
Teen	0.00	0.00	0.00	0.00	16.00	3.80	0.00	67.00	45.00	52.00
Child	0.00	0.00	0.00	0.00	6.90	1.70	0.00	14.00	28.00	29.00
Infant	0.00	0.00	0.00	0.00	0.00	0.00	0.00	0.00	0.00	0.00

---

* Regulatory Guide 1.109.

** HERMES; "A Digital Computer Code for Estimating Regional Radiological Effects from Nuclear Power Industry," HEDL, December 1971. Note, for Method II analyses, these pathways need not be evaluated since they represent only a small fraction of the total dose contribution associated with the other pathways.

*** Regional shoreline use associated with mudflats - Maine Yankee Atomic Power Station Environmental Report.

7.2 Gaseous Release Dose Calculations

7.2.1 Total Body Dose Rate From Noble Gases

This section serves: (1) to document the development of the Method I equation, (2) to provide background information to Method I users, and (3) to identify the general equations, parameters and approaches to Method II-type dose rate assessments.

Method I may be used to show that the Part A Controls which limit total body dose rate from noble gases released to the atmosphere (Part A Control C.7.1.1) has been met for the peak noble gas release rate.

Method I was derived from general equation B-8 in Regulatory Guide 1.109 as follows:

$$\dot{D}_{tb} = 1E+06[X/Q]^{\gamma} \sum_i \dot{Q}_i DFB_i \qquad (7\text{-}3)$$

$$\left(\frac{\text{mrem}}{\text{yr}}\right) = \left(\frac{\text{pCi}}{\mu\text{Ci}}\right)\left(\frac{\text{sec}}{\text{m}^3}\right)\left(\frac{\mu\text{Ci}}{\text{sec}}\right)\left(\frac{\text{mrem-m}^3}{\text{pCi-yr}}\right)$$

where:

$[X/Q]^{\gamma}$ = Maximum off-site receptor location long-term average gamma atmospheric dispersion factor.

$\dot{Q}_i$ = Release rate to the environment of noble gas "i" (μCi/sec).

DFB_i = Gamma total body dose factor, $\left(\frac{\text{mrem-m}^3}{\text{pCi-yr}}\right)$. See Table B.1-10. (Regulatory Guide 1.109, Table B-1).

Elevated and ground level gaseous effluent release points are addressed separately through the use of specific $[X/Q]^{\gamma}$ For an elevated gaseous effluent release point and off-site receptor, Equation 7-3 takes the form:

$$\dot{D}_{tb(e)} = (1E+06) * (8.5E-07) * \sum_i (\dot{Q}_i * DFB_i)$$

$$\left(\frac{\text{mrem}}{\text{yr}}\right) = \left(\frac{\text{pCi}}{\mu\text{Ci}}\right) * \left(\frac{\text{sec}}{\text{m}^3}\right) * \Sigma\left(\frac{\mu\text{Ci}}{\text{sec}} * \frac{\text{mrem-m}^3}{\text{pCi-yr}}\right)$$

which reduces to:

$$\dot{D}_{tb(e)} = 0.85 * \sum_i (\dot{Q}_i * DFB_i) \qquad (3\text{-}3a)$$

$$\left(\frac{\text{mrem}}{\text{yr}}\right) = \left(\frac{\text{pCi} - \text{sec}}{\mu\text{Ci} - \text{m}^3}\right) \Sigma \left(\frac{\mu\text{Ci}}{\text{sec}}\right) * \left(\frac{\text{mrem} - \text{m}^3}{\text{pCi} - \text{yr}}\right)$$

For a ground level gaseous effluent release point and off-site receptor, Equation 7-3 takes the form:

$$\dot{D}_{tb(g)} = (1E+06) * (3.4E-06) * \sum_i (\dot{Q}_i * DFB_i)$$

which reduces to:

$$\dot{D}_{tb(g)} = 3.4 * \sum_i (\dot{Q}_i * DFB_i) \qquad (3\text{-}3b)$$

$$\left(\frac{\text{mrem}}{\text{yr}}\right) = \left(\frac{\text{pCi} - \text{sec}}{\mu\text{Ci} - \text{m}^3}\right) \Sigma \left(\frac{\mu\text{Ci}}{\text{sec}}\right) * \left(\frac{\text{mrem} - \text{m}^3}{\text{pCi} - \text{yr}}\right)$$

The selection of critical receptor, outlined in Part B, Section 7.3 is inherent in the derived Method I, since the maximum expected off-site long-term average atmospheric dispersion factor is used. The sum of doses from both plant vent stack and ground level releases must be considered for determination of Technical Specification compliance. All noble gases in Table B.1-10 should be considered.

A Method II analysis could include the use of actual concurrent meteorology to assess the dose rates as the result of a specific release.

7.2.2 Skin Dose Rate from Noble Gases

This section serves: (1) to document the development of the Method I equation, (2) to provide background information to Method I users, and (3) to identify the general equations parameters and approaches to Method II-type dose rate assessments. The methods to calculate skin dose rate parallel the total body dose rate methods in Part B, Section 7.2.1. Only the differences are presented here.

Method I may be used to show that the Part A Controls which limit skin dose rate from noble gases released to the atmosphere (Part A Control C.7.1.1) has been met for the peak noble gas release rate.

The annual skin dose limit is 3,000 mrem (from NBS Handbook 69, Reference D, pages 5 and 6, is 30 rem/10). The factor of 10 reduction is to account for nonoccupational dose limits.

It is the skin dose commitment to the critical, or most limiting, off-site receptor assuming long-term site average meteorology and that the release rate reading remains constant over the entire year.

Method I was derived from the general equation B-9 in Regulatory Guide 1.109 as follows:

$$D^S = 1.11\, D^{\gamma}_{air} + 3.17E{+}04 \sum_i \dot{Q}_i [X/Q]\, DFS_i \qquad (7\text{-}4)$$

$$\left(\frac{\text{mrem}}{\text{yr}}\right) = \left(\frac{\text{mrem}}{\text{mrad}}\right)\left(\frac{\text{mrad}}{\text{yr}}\right)\left(\frac{\text{pCi-yr}}{\text{Ci-sec}}\right)\frac{\text{Ci}}{\text{yr}}\left(\frac{\text{sec}}{\text{m}^3}\right)\left(\frac{\text{mrem-m}^3}{\text{pCi-yr}}\right)$$

where:

1.11 = Average ratio of tissue to air absorption coefficients (will convert mrad in air to mrem in tissue).

DFS_i = Beta skin dose factor for a semi-infinite cloud of radionuclide "i" which includes the attenuation by the outer "dead" layer of the skin.

$$D^{\gamma}_{air} = 3.17E{+}04 \sum_i \dot{Q}_i [X/Q]\, DF^{\gamma}_i \qquad (7\text{-}5)$$

$$\left(\frac{\text{mrad}}{\text{yr}}\right) = \left(\frac{\text{pCi-yr}}{\text{Ci-sec}}\right) \quad \left(\frac{\text{Ci}}{\text{yr}}\right)\left(\frac{\text{sec}}{\text{m}^3}\right)\left(\frac{\text{mrad-m}^3}{\text{pCi-yr}}\right)$$

DF^{γ}_i = Gamma air dose factor for a uniform semi-infinite cloud of radionuclide "i".

Now it is assumed for the definition of (X/Q^{γ}) from Reference 8 that:

$$D^{\gamma}_{finite} = D^{\gamma}_{air} [X/Q]^{\gamma} / [X/Q] \qquad (7\text{-}6)$$

$$\left(\frac{\text{mrad}}{\text{yr}}\right) = \left(\frac{\text{mrad}}{\text{yr}}\right)\left(\frac{\text{sec}}{\text{m}^3}\right)\left(\frac{\text{m}^3}{\text{sec}}\right)$$

and

$$Q_i = 31.54\, \dot{Q}_i \qquad (7\text{-}7)$$

$$\left(\frac{\text{Ci}}{\text{yr}}\right) = \left(\frac{\text{Ci-sec}}{\mu\text{Ci-yr}}\right)\left(\frac{\mu\text{Ci}}{\text{sec}}\right)$$

so:

$$\dot{D}_{skin} = 1.11\ \ 1E+06 \left[\frac{X}{Q}\right]^{\gamma} \sum_i \dot{Q}_i * DF_i^{\gamma} \qquad (7\text{-}8)$$

$$\left(\frac{mrem}{yr}\right) = \left(\frac{mrem}{mrad}\right)\left(\frac{pCi}{\mu Ci}\right)\left(\frac{sec}{m^3}\right)\left(\frac{\mu Ci}{sec}\right)\left(\frac{mrad - m^3}{pCi - yr}\right)$$

$$+1E+06\ X/Q \sum_i \dot{Q}_i DFS_i$$

$$\left(\frac{pCi}{\mu Ci}\right)\left(\frac{sec}{m^3}\right)\left(\frac{\mu Ci}{sec}\right)\left(\frac{mrem - m^3}{pCi - yr}\right)$$

Substituting atmospheric dispersion factors for an elevated gaseous effluent release point, Equation 7-8 takes the following form:

$$\dot{D}_{skin(e)} = [1.11 * 1E+06 * 8.5E-07 * \sum_i (\dot{Q}_i * DF_i^{\gamma})] + [1E+06 * 8.2E-07 * \sum_i (\dot{Q}_i * DFS_i)]$$

which yields:

$$\dot{D}_{skin(e)} = [0.94 \sum_i (\dot{Q}_i * DF_i^{\gamma})] + [0.82 \sum_i (\dot{Q}_i * DFS_i)]$$

$$\left(\frac{mrem}{yr}\right) = \left(\frac{pCi - sec - mrem}{\mu Ci - m^3 - mrad}\right) \Sigma \left(\frac{\mu Ci}{sec} * \frac{mrem - m^3}{pCi - yr}\right) + \frac{pCi - sec}{\mu Ci - m^3} \Sigma \left(\frac{\mu Ci}{sec} * \frac{mrem - m^3}{pCi - yr}\right) \qquad (7\text{-}9a)$$

defining:

$$DF'_{i(e)} = 0.94\, DF_i^{\gamma} + 0.82\, DFS_i \qquad (7\text{-}10a)$$

Then the off-site skin dose rate equation for an elevated gaseous effluent release point is:

$$\dot{D}_{skin(e)} = \sum_i \dot{Q}_i * DF'_{i(e)} \qquad (3\text{-}4a)$$

$$\left(\frac{mrem}{yr}\right) = \Sigma \left(\frac{\mu Ci}{sec} * \frac{mrem - sec}{\mu Ci - yr}\right)$$

For an off-site receptor and a ground level gaseous effluent release point, Equation 7-8 becomes:

$$\dot{D}_{skin(g)} = [1.11 * 1E+06 * 3.4E-06 * \Sigma(\dot{Q}_i * DF_i^{\gamma})] + [1E+06 * 1.0E-05 * \sum_i (\dot{Q}_i * DFS_i)]$$

which yields:

$$\dot{D}_{skin(g)} = [3.8 \sum_i (\dot{Q}_i * DF_i^{\gamma})] + [10 \sum_i (\dot{Q}_{ii} * DFS_i)] \quad (7\text{-}9b)$$

$$= \sum_i \dot{Q}_i [3.8\, DF_i^{\gamma} + 10\, DFS_i]$$

defining:

$$DF'_{i(g)} = 3.8\, DF_i^{\gamma} + 10\, DFS_i \quad (7\text{-}10b)$$

Then the off-site skin dose rate equation for ground level gaseous effluent release points is:

$$\dot{D}_{skin(g)} = \sum_i \dot{Q}_i * DF'_{i(g)} \quad (3\text{-}4b)$$

The selection of critical receptor, outlined in Part B, Section 7.3, is inherent in the derived Method I, as it is based on the determined maximum expected off-site atmospheric dispersion factors. All noble gases in Table B.1-10 must be considered.

7.2.3 Critical Organ Dose Rate from Iodines, Tritium and Particulates With Half-Lives Greater Than Eight Days

This section serves: (1) to document the development of the Method I equation, (2) to provide background information to Method I users, and (3) to identify the general equation's parameters and approached to Method II type dose rate assessments. The methods to calculate skin dose rate parallel the total body dose rate methods in Part B, Section 7.2.1.

Method I may be used to show that the Part A Controls which limit organ dose rate from iodines, tritium and radionuclides in particulate form with half lives greater than 8 days released to the atmosphere (Part A Control C.7.1.1) has been met for the peak above-mentioned release rates. The annual organ dose limit is 1500 mrem (from NBS Handbook 69, Reference D, pages 5 and 6). It is evaluated by looking at the critical organ dose commitment to the most limiting off-site receptor assuming long-term site average meteorology.

The equation for $\dot{D}_{co}$ is derived from a form of Equation 3-8 in Part B, Section 3.9 by applying the conversion factor, 3.154E+07 (sec/yr) and converting Q to $\dot{Q}$ µCi/sec:

$$\dot{D}_{co} = 3.15E+07 * \sum_i (\dot{Q}_i * DFG_{ico}) \quad (7\text{-}12)$$

$$\left(\frac{mrem}{yr}\right) = \left(\frac{sec}{yr}\right) \Sigma \left(\frac{\mu Ci}{sec}\right) * \left(\frac{mrem}{\mu Ci}\right)$$

Equation 7-12 is rewritten in the form:

$$\dot{D}_{co} = \sum_i (\dot{Q}_i * DFG'_{ico})$$

$$\left(\frac{\text{mrem}}{\text{yr}}\right) = \Sigma\left(\frac{\mu\text{Ci}}{\text{sec}}\right) * \left(\frac{\text{mrem-sec}}{\mu\text{Ci-yr}}\right) \qquad (7\text{-}12a)$$

where:

$$DFG'_{ico} = 3.154\,E{+}07 * DFG_{ico} \qquad (7\text{-}13)$$

$$\left(\frac{\text{mrem-sec}}{\mu\text{Ci-yr}}\right) = \left(\frac{\text{sec}}{\text{yr}}\right) * \left(\frac{\text{mrem}}{\mu\text{Ci}}\right)$$

The dose conversion factor, DFG_{ico}, has been developed for both elevated gaseous effluent release points and ground level gaseous effluent release points ($DFG_{ico(e)}$ and $DFG_{ico(g)}$), respectively. These dose factors are used to determine accumulated doses over extended periods and have been calculated with the Shielding Factor (SF) for ground plane exposure set equal to 0.7, as referenced in Regulatory Guide 1.109. In the case of the dose rate conversion factors ($DFG'_{ico(e)}$ and $DFG'_{ico(g)}$), the dose conversion factors from which they were derived were calculated with the Shielding Factor (SF) for ground plane exposure set equal to 1.0.

For an off-site receptor and elevated effluent release point, the critical organ dose rate equation is:

$$\dot{D}_{co(e)} = \sum_i (\dot{Q}_i * DFG'_{ico(e)}) \qquad (3\text{-}5a)$$

$$\left(\frac{\text{mrem}}{\text{yr}}\right) = \Sigma\left(\frac{\mu\text{Ci}}{\text{sec}} * \frac{\text{mrem-sec}}{\mu\text{Ci-yr}}\right)$$

For an off-site receptor and ground level effluent release point, the critical organ dose rate equation is:

$$\dot{D}_{co(g)} = \sum_i (\dot{Q}_i * DFG'_{ico(g)}) \qquad (3\text{-}5b)$$

$$\left(\frac{\text{mrem}}{\text{yr}}\right) = \Sigma\left(\frac{\mu\text{Ci}}{\text{sec}} * \frac{\text{mrem-sec}}{\mu\text{Ci-yr}}\right)$$

The selection of critical receptor, outlined in Part B, Section 7.3 is inherent in Method I, as are the expected atmospheric dispersion factors.

In accordance with the Basis Statement 3/4.11.2.1 in NUREG-0472, and the base's section for the organ dose rate limit given for Part A Control C.7.1.1 a Method II dose rate calculation, for compliance purposes, can be based on restricting the inhalation pathway to a child's thyroid to less than or equal to 1,500 mrem/yr. Concurrent meteorology with time of release may also be used to assess compliance for a Method II calculation.

7.2.4 Gamma Dose to Air from Noble Gases

This section serves: (1) to document the development and conservative nature of Method I equations to provide background information to Method I users, and (2) to identify the general equations, parameters and approaches to Method II-type dose assessments.

Method I may be used to show that the Part A Control C.7.2.1 which limits off-site gamma air dose from gaseous effluents has been met for releases over appropriate periods. This Part A Control is based on the objective in 10CFR50, Appendix I, Subsection B.1, which limits the estimated gamma air dose in off-site unrestricted areas.

NUREG/CR-2919 presents a methodology for determining atmospheric dispersion factors (CHI/Q values) for intermittent releases at user specified receptor locations (intermittent releases being defined as releases with durations between 1 and 8,760 hours). The CHI/Q values for intermittent releases are determined by linearly interpolating (on a log-log basis) between an hourly 15-percentile CHI/Q value and an annual average CHI/Q value as a function of release duration. This methodology has been adopted to produce a set of time-dependent atmospheric dispersion factors for Method I calculations.

For any noble gas release, in any period, the increment in dose is taken from Equations B-4 and B-5 of Regulatory Guide 1.109 with the added assumption that $D^{\gamma}_{finite} = D^{\gamma}\,[X/Q]^{\gamma}/[X/Q]$:

$$\Delta D^{\gamma}_{air(e)} = 3.17E+4\,[X/Q]^{\gamma} \sum_i Q_i DF^{\gamma}_i$$

$$(\text{mrad}) = \left(\frac{\text{pCi - yr}}{\text{Ci} - \text{sec}}\right)\left(\frac{\text{sec}}{\text{m}^3}\right)(\text{Ci})\left(\frac{\text{mrad - m}^3}{\text{pCi - yr}}\right) \qquad (7\text{-}14)$$

where:

3.17E+04= Number of pCi per Ci divided by the number of seconds per year.

$[X/Q]^{\gamma}$ = Annual average gamma atmospheric dispersion factor for the receptor location of interest.

Q_i = Number of curies of noble gas "i" released.

DF^{γ}_i = Gamma air dose factor for a uniform semi-infinite cloud of radionuclide "i".

Incorporating a unitless release duration adjustment term t^{-a} (where "a" is a constant and "t" is the total release duration in hours), and the conversion factor for Ci to μCi (to accommodate the use of a release rate Q in μCi), and substituting the 1-hour gamma atmospheric dispersion factor in place of the annual average gamma atmospheric dispersion factor in Equation 7-14 leads to:

$$D^{\gamma}_{air} = 3.17E-02 * [X/Q]^{\gamma}_{hr} * t^{-a} * \sum_i \left(Q_i * DF_i^{\gamma}\right)$$

$$(\text{mrad}) = \left(\frac{\text{pCi - yr}}{\mu\text{Ci} - \text{sec}}\right) * \left(\frac{\text{sec}}{\text{m}^3}\right) * \sum \left(\mu\text{Ci} * \frac{\text{mrad - m}^3}{\text{pCi - yr}}\right) \quad (3\text{-}6)$$

For an elevated release, the equation used for an off-site receptor is:

$$D^{\gamma}_{air(e)} = 3.17E-02 * [1.0E-05] * t^{-0.275} * \sum_i \left(Q_i * DF_i^{\gamma}\right)$$

which leads to:

$$D^{\gamma}_{air(e)} = 3.2E-07 * t^{-0.275} * \sum_i \left(Q_i * DF_i^{\gamma}\right) \quad (3\text{-}6a)$$

$$(\text{mrad}) = \left(\frac{\text{pCi - yr}}{\mu\text{Ci} - \text{m}^3}\right) * \sum \left(\mu\text{Ci} * \frac{\text{mrad - m}^3}{\text{pCi - yr}}\right)$$

For a ground-level release, the equation used for an off-site receptor is:

$$D^{\gamma}_{air(g)} = 3.17E-02 * [4.9E-05] * t^{-0.293} * \sum_i \left(Q_i * DF_i^{\gamma}\right)$$

which leads to:

$$D^{\gamma}_{air(g)} = 1.6E-06 * t^{-0.293} * \sum_i \left(Q_i * DF_i^{\gamma}\right) \quad (3\text{-}6b)$$

$$(\text{mrad}) = \left(\frac{\text{pCi - yr}}{\mu\text{Ci} - \text{m}^3}\right) * \sum \left(\mu\text{Ci} * \frac{\text{mrad - m}^3}{\text{pCi - yr}}\right)$$

The major difference between Method I and Method II is that Method II would use actual or concurrent meteorology with a specific noble gas release spectrum to determine $[X/Q]^{\gamma}$ rather than use the site's long-term average meteorological dispersion values.

7.2.5 Beta Dose to Air from Noble Gases

This section serves: (1) to document the development and conservative nature of Method I equations to provide background information to Method I users, and (2) to identify the general equations, parameters and approaches to Method II-type dose assessments.

Method I may be used to show that Part A Control C.7.2.1, which limits off-site beta air dose from gaseous effluents, has been met for releases over appropriate periods. This Part A Control is based on the objective in 10CFR50, Appendix I, Subsection B.1, which limits the estimated beta air dose in off-site unrestricted area locations.

For any noble gas release, in any period, the increment in dose is taken from Equations B-4 and B-5 of Regulatory Guide 1.109:

$$\Delta D^{\beta}_{air} = 3.17E-02 * X/Q \sum_i \left(Q_i * DF_i^{\beta}\right) \quad (7\text{-}15)$$

$$(\text{mrad}) = \left(\frac{\text{pCi - yr}}{\mu\text{Ci} - \text{sec}}\right) * \left(\frac{\text{sec}}{\text{m}^3}\right) (\mu\text{Ci}) \left(\frac{\text{mrad - m}^3}{\text{pCi - yr}}\right)$$

where:

DF_i^{β} = Beta air dose factors for a uniform semi-infinite cloud of radionuclide "i".

Incorporating the term t^{-a} into Equation 7-15 leads to:

$$D_{air}^{\beta} = 3.17E-02 * X/Q_{1hr} * t^{-a} * \sum_i (Q_i * DF_i^{\beta}) \quad (3\text{-}7)$$

$$(\text{mrad}) = \left(\frac{\text{pCi-yr}}{\mu\text{Ci-sec}}\right) * \left(\frac{\text{sec}}{\text{m}^3}\right) * (\ ) * \Sigma \left(\mu\text{Ci} * \frac{\text{mrad-m}^3}{\text{pCi-yr}}\right)$$

Where X/Q_{1hr} = average 1-hour undepleted atmospheric dispersion factor.

For an elevated release, the equation used for an off-site receptor is:

$$D_{air(e)}^{\beta} = 3.17E-02 * 1.3E-05 * t^{-0.3} * \sum_i (Q_i * DF_i^{\beta})$$

$$(\text{mrad}) = \left(\frac{\text{pCi-yr}}{\mu\text{Ci-sec}}\right) * \left(\frac{\text{sec}}{\text{m}^3}\right) * (\ ) * \Sigma \left(\mu\text{Ci} * \frac{\text{mrad-m}^3}{\text{pCi-yr}}\right)$$

which leads to:

$$D_{air(e)}^{\beta} = 4.1E-07 * t^{-0.3} * \sum_i (Q_i * DF_i^{\beta}) \quad (3\text{-}7a)$$

$$(\text{mrad}) = \left(\frac{\text{pCi-yr}}{\mu\text{Ci-m}^3}\right) * (\ ) * \Sigma \left(\mu\text{Ci} * \frac{\text{mrad-m}^3}{\text{pCi-yr}}\right)$$

For a ground-level release, the equation used for an off-site receptor is:

$$D_{air(g)}^{\beta} = 3.17E-02 * 1.9E-04 * t^{-0.319} * \sum_i (Q_i * DF_i^{\beta})$$

$$(\text{mrad}) = \left(\frac{\text{pCi-yr}}{\mu\text{Ci-sec}}\right) * \left(\frac{\text{sec}}{\text{m}^3}\right) * (\ ) * \Sigma \left(\mu\text{Ci} * \frac{\text{mrad-m}^3}{\text{pCi-yr}}\right)$$

which leads to:

$$D^{\beta}_{air(g)} = 6.0E-06 * t^{-0.319} * \sum_i \left(Q_i * DF_i^{\beta}\right) \qquad (3\text{-}7b)$$

$$(\text{mrad}) = \left(\frac{\text{pCi - yr}}{\mu\text{Ci} - \text{m}^3}\right) * (\ ) * \Sigma \left(\mu\text{Ci} * \frac{\text{mrad - m}^3}{\text{pCi - yr}}\right)$$

7.2.6 Dose to Critical Organ from Iodines, Tritium and Particulates with Half-Lives Greater Than Eight Days

This section serves: (1) to document the development and conservative nature of Method I equations to provide background information to Method I users, and (2) to identify the general equations, parameters and approaches to Method II-type dose assessments.

Method I may be used to show that the Part A Controls which limit off-site organ dose from gases (C.7.3.1 and C.8.1.1) have been met for releases over the appropriate periods. Part A Control C.7.3.1 is based on the ALARA objectives in 10CFR50, Appendix I, Subsection II C. Part A Control C.8.1.1 is based on Environmental Standards for Uranium Fuel Cycle in 40CFR190, which applies to direct radiation as well as liquid and gaseous effluents. These methods apply only to iodine, tritium, and particulates in gaseous effluent contribution.

Method I was developed such that "the actual exposure of an individual ... is unlikely to be substantially underestimated" (10CFR50, Appendix I). The use below of a single "critical receptor" provides part of the conservative margin to the calculation of critical organ dose in Method I. Method II allows that actual individuals, associated with identifiable exposure pathways, be taken into account for any given release. In fact, Method I was based on a Method II analysis of a critical receptor assuming all pathways present. That analysis was called the "base case"; it was then reduced to form Method I. The base case, the method of reduction, and the assumptions and data used are presented below.

The steps performed in the Method I derivation follow. First, the dose impact to the critical receptor [in the form of dose factors DFG_{ico} (mrem/μCi)] for a unit activity release of each iodine, tritium, and particulate radionuclide with half lives greater than eight days to gaseous effluents was derived. Six exposure pathways (ground plane, inhalation, stored vegetables, leafy vegetables, milk, and meat ingestion) were assumed to exist at the site boundary (not over water or marsh areas) which exhibited the highest long-term X/Q. Doses were then calculated to six organs (bone, liver, kidney, lung, GI-LLI, and thyroid), as well as for the whole body and skin for four age groups (adult, teenager, child, and infant) due to the seven combined exposure pathways. For each radionuclide, the highest dose per unit activity release for any organ (or whole body) and age group was then selected to become the Method I site-specific dose factors. The base case, or Method I analysis, uses the general equations methods, data, and assumptions in Regulatory Guide 1.109 (Equation C-2 for doses resulting from direct exposure to contaminated ground plane; Equation C-4 for doses associated with inhalation of all radionuclides to different organs of individuals of different age groups; and Equation C-13 for doses to organs of individuals in different age groups resulting from ingestion of radionuclides in produce, milk, meat, and leafy vegetables in Reference A). Tables B.7-2 and B.7-3 outline human consumption and environmental parameters used in the analysis. It is conservatively assumed that the critical receptor lives at the "maximum off-site atmospheric dispersion factor location" as defined in Section 7.3.

The resulting site-specific dose factors are for the maximum organ which combine the limiting age group with the highest dose factor for any organ with each nuclide. These critical organ, critical age dose factors are given in Table B.1-12. Appendix A provides an example of the development of Method I gaseous dose conversion factor for site-specific conditions at Seabrook.

For any iodine, tritium, and particulate gas release, during any period, the increment in dose from radionuclide "i" is:

$$\Delta D_{ico} = Q_i DFG_{ico} \qquad (7\text{-}16)$$

where DFG_{ico} is the critical dose factor for radionuclide "i" and Q_i is the activity of radionuclide "i" released in microcuries.

Applying this information, it follows that the general form for the critical organ dose equation is:

$$D_{co} = (X/Q)^{depl}_{1\,hr} / (X/Q)^{depl}_{an} * t^{-a} * \sum_i (Q_i * DFG_{ico}) \qquad (3\text{-}8)$$

$$\text{mrem} = \left(\frac{\text{sec}}{\text{m}^3}\right) / \left(\frac{\text{sec}}{\text{m}^3}\right) * ( ) * \sum \left(\mu\text{Ci} * \frac{\text{mrem}}{\mu\text{Ci}}\right)$$

Substituting specific values associated with the maximum off-site receptor location and elevated release condition yields:

$$D_{co(e)} = (1.12\text{E-}05)/(7.55\text{E-}07) * t^{-0.297} * \sum_i (Q_i * DFG_{ico(e)})$$

which reduces to:

$$D_{co(e)} = 14.8 * t^{-0.297} * \sum_i (Q_i * DFG_{ico(e)}) \qquad (3\text{-}8a)$$

For the maximum off-site receptor location and ground-level release conditions, the equation is:

$$D_{co(g)} = (1.71E-04)/(9.64E-06) * t^{-0.316} * \sum_i (Q_i * DFG_{ico(g)})$$

which reduces to:

$$D_{co(g)} = 17.7 * t^{-0.316} * \sum_i (Q_i * DFG_{ico(g)}) \quad (3\text{-}8b)$$

7.2.7 Special Receptor Gaseous Release Dose Calculations

Part A Section 10.2 requires that the doses to individuals involved in recreational activities within the site boundary are to be determined and reported in the Annual Radioactive Effluent Release Report.

The gaseous dose calculations for the special receptors parallel the bases of the gaseous dose rates and doses in Part B, Sections 7.2.1 through 7.2.5. Only the differences are presented here. The special receptor XQs are given in Table B.7-5.

7.2.7.1 Total Body Dose Rate from Noble Gases

Method I was derived from Regulatory Guide 1.109 as follows:

$$\dot{D}_{tb} = 1E+06[X/Q]^r \sum_i \dot{Q}_i DFB_i \quad (7\text{-}3)$$

General Equation (7-3) is then multiplied by an Occupancy Factor (OF) to account for the time an individual will be at the on-site receptor locations during the year. There are two special receptor locations on-site. The "Rocks" is a boat landing area which provides access to Browns River and Hampton Harbor. The Seabrook Station UFSAR, Chapter 2.1, indicates little boating activity in either Browns River or nearby Hunts Island Creek has been observed upon which to determine maximum or conservative usage factors for this on-site shoreline location. As a result, a default value for shoreline activity as provided in Regulatory Guide 1.109, Table E-5, for maximum individuals was utilized for determining the "Rocks" occupancy factor. The 67 hours/year corresponds to the usage factor for a teenager involved in shoreline recreation. This is the highest usage factor of all four age groups listed in Regulatory Guide 1.109, and has been used in the ODCM to reflect the maximum usage level irrespective of age.

Regulatory Guide 1.109 does not provide a maximum individual usage factor for activities similar to those which would be associated with the Seabrook Station Science & Nature Center. Therefore, the usage factor used in the ODCM for the Science & Nature Center reflects the observed usage patterns of visitors to the facility. Individuals in the public who walk in to look at the exhibits on display and pick up available information stay approximately 1.5 hours each. Tour groups who schedule visits to the facility stay approximately 2.5 hours. For conservatism, it was assumed that an individual in a tour group would return five times in a year, and stay 2.5 hours on each visit. These assumptions, when multiplied together, provide the occupancy factor of 12.5 hours/year used in the ODCM for public activities associated with the Science & Nature Center.

For the Science & Nature Center, and the "Rocks", the occupancy factors (OFs) are:

Science & Nature Center - $\frac{12.5\,\text{hrs/yr}^{(1)}}{8760\,\text{hrs/yr}} = 0.0014$

The "Rocks" - $\frac{67\,\text{hrs/yr}^{(1)}}{8760\,\text{hrs/yr}} = 0.0076$

substituting in the annual average gamma X/Qs:

$[X/Q]^{\gamma}$ = 1.1E-06 sec/m^3 (Science & Nature Center) for primary vent stack releases.

= 5.3E-06 sec/m^3 (Science & Nature Center) for ground level releases.

= 5.0E-06 sec/m^3 (The "Rocks") for primary vent stack releases.

= 2.6E-05 sec/m^3 (The "Rocks") for ground level releases.

and multiplying by:

OF = 0.0014 (Science & Nature Center)

= 0.0076 (The "Rocks")

gives:

$$\dot{D}_{tbE(e)} = 0.0015 * \sum_i (\dot{Q}_i * DFB_i) \quad \text{(mrem/yr)} \quad \text{(3-3c)}$$

$$\dot{D}_{tbE(g)} = 0.0074 * \sum_i (\dot{Q}_i * DFB_i) \quad \text{(mrem/yr)} \quad \text{(3-3d)}$$

$$\dot{D}_{tbR(e)} = 0.038 * \sum_i (\dot{Q}_i * DFB_i) \quad \text{(mrem/yr)} \quad \text{(3-3e)}$$

$$\dot{D}_{tbR(g)} = 0.2 * \sum_i (\dot{Q}_i * DFB_i) \quad \text{(mrem/yr)} \quad \text{(3-3f)}$$

where:

$\dot{D}_{tbE(e)}, \dot{D}_{tbE(g)}, \dot{D}_{tbR(e)}$, and $\dot{D}_{tbR(g)}$ = total body dose rates to an individual at the Science & Nature Center and the "Rocks" (recreational site), respectively, due to noble gases in an elevated (e) and ground level (g) release,

(1) Taken from Seabrook Station Technical Specifications (Figure 5.1-1).

$\dot{Q}$ and DFB_i are as defined previously.

7.2.7.2 Skin Dose Rate from Noble Gases

Method I was derived from Equation (7-8):

$$\dot{D}_{skin} = 1.111E+06\ [X/Q]^{\gamma} \sum_i \dot{Q}_i\, DF_i^{\gamma} + \qquad (7\text{-}8)$$

$$1E+06\ X/Q \sum_i \dot{Q}_i DFS_i$$

substituting in the annual average gamma X/Qs:

$[X/Q]^{\gamma}$ = 1.1E-06 sec/m^3 (Science & Nature Center) for primary vent stack releases.

= 5.3E-06 sec/m^3 (Science & Nature Center) for ground level release points.

= 5.0E-06 sec/m^3 (The "Rocks") for primary vent stack releases.

= 2.6E-05 sec/m^3 (The "Rocks") for ground level release points.

and the annual average undepleted X/Qs:

X/Q = 1.6E-06 sec/m^3 (Science & Nature Center) for primary vent stack releases.

= 2.3E-05 sec/m^3 (Science & Nature Center) for ground level release points.

= 1.7E-05 sec/m^3 (The "Rocks") for primary vent stack releases.

= 1.6E-04 sec/m^3 (The "Rocks") for ground level release points.

and multiplying by:

OF = 0.0014 (Science & Nature Center)

= 0.0076 (The "Rocks")

gives:

$$\dot{D}_{skinE(e)} = 0.0014 \sum_i \dot{Q}_i [1.22\, DF_i^{\gamma} + 1.60\, DFS_i] \text{ for an elevated release point.}$$

$$\dot{D}_{skinE(g)} = 0.0014 \sum_i \dot{Q}_i [5.88\, DF_i^{\gamma} + 23\, DFS_i] \text{ for a ground level release point.}$$

$$\dot{D}_{skinR(e)} = 0.0076 \sum_i \dot{Q}_i [5.55\, DF_i^{\gamma} + 17.0\, DFS_i] \text{ for an elevated release point.}$$

$$\dot{D}_{skinR(g)} = 0.0076 \sum_i \dot{Q}_i [28.9\, DF_i^{\gamma} + 160\, DFS_i] \text{ for a ground level release point.}$$

and the equations can be written:

$$\dot{D}_{skinE(e)} = 0.0014 * \sum_i (\dot{Q}_i * DF'_{iE(e)}) \quad (3\text{-}4c)$$

$$\dot{D}_{skinE(g)} = 0.0014 * \sum_i (\dot{Q}_i * DF'_{iE(g)}) \quad (3\text{-}4d)$$

$$\dot{D}_{skinR(e)} = 0.0076 * \sum_i (\dot{Q}_i * DF'_{iR(e)}) \quad (3\text{-}4e)$$

$$\dot{D}_{skinR(g)} = 0.0076 * \sum_i (\dot{Q}_i * DF'_{iR(g)}) \quad (3\text{-}4f)$$

where:

$\dot{D}_{skinE(e)}, \dot{D}_{skinE(g)}, \dot{D}_{skinR(e)}$, and $\dot{D}_{skinR(g)}$ = the skin dose rate (mrem/yr) to an individual at the Science & Nature Center and the "Rocks", respectively, due to noble gases in an elevated (e) and ground level (g) release,

$\dot{Q}_i$ = defined previously, and

$DF'_{iE(e)}, DF'_{iE(g)}, DF'_{iR(e)}$, and $DF'_{iR(e)}$ = the combined skin dose factors for radionuclide "i" for the Science & Nature Center and the "Rocks", respectively, for elevated (e) and ground level (g) release points (see Table B.1-13).

7.2.7.3 Critical Organ Dose Rate from Iodines, Tritium and Particulates with Half-Lives Greater Than Eight Days

The equations for $\dot{D}_{co}$ are derived in the same manner as in Part B, Section 7.2.2, except that the occupancy factors are also included. Therefore:

$\dot{D}_{CoE(e)} = 0.0014 * \sum_i (\dot{Q}_i * DFG'_{icoE(e)})$ for an elevated release. (3-5c)

$\dot{D}_{coE(g)} = 0.0014 * \sum_i (\dot{Q}_i * DFG'_{icoE(g)})$ for a ground level release. (3-5d)

$\dot{D}_{coR(e)} = 0.0076 * \sum_i (\dot{Q}_i * DFG'_{icoR(e)})$ for an elevated release. (3-5e)

$\dot{D}_{coR(g)} = 0.0076 * \sum_i (\dot{Q}_i * DFG'_{icoR(g)})$ for a ground level release. (3-5f)

where:

$\dot{D}_{coE(e)}, \dot{D}_{coE(g)}, \dot{D}_{coR(e)}$, and $\dot{D}_{coR(g)}$ = the critical organ dose rates (mrem/yr) to an individual at the Science & Nature Center and the "Rocks", respectively, due to iodine, tritium, and particulates in elevated (e) and ground level (g) releases,

$\dot{Q}_i$ = as defined previously, and

$DFG'_{icoE(e)}, DFG'_{icoE(g)}, DFG'_{icoR(e)}$, and $DFG'_{icoR(g)}$ = the critical organ dose rate factors for radionuclide "i" for the Science & Nature Center and the "Rocks", respectively, for elevated (e) and ground level (g) release points (see Tables B.1-14 and B.1-15).

7.2.7.4 Gamma Dose to Air from Noble Gases

Method I was derived from Equation (3-6):

$$D^{\gamma}_{air} = 3.17E\text{-}02 * [X/Q]^{\gamma}_{hr} * t^{-a} * \sum_i (\dot{Q}_i * DF^{\gamma}_i) \qquad (3\text{-}6)$$

where all terms of the equation are as defined previously.

Incorporating the specific OF and the atmospheric dispersion factor, the gamma air dose equation for the Science & Nature Center for elevated releases:

$$D^{\gamma}_{airE(e)} = 3.17E\text{-}02 * 1.1E\text{-}05\, t^{-0.252} * 0.0014 * \sum_i (Q_i * DF^{\gamma}_i)$$

which reduces to:

$$D^{\gamma}_{airE(e)} = 4.9E\text{-}10 * t^{-0.252} * \sum_i (Q_i * DF^{\gamma}_i) \qquad (3\text{-}6c)$$

$$(\text{mrad}) = \left(\frac{\text{pCi-yr}}{\mu\text{Ci-m}^3}\right) * (\ ) * \Sigma\left(\mu\text{Ci} * \frac{\text{mrad-m}^3}{\text{pCi-yr}}\right)$$

For ground-level releases, the gamma air dose equation for the Science & Nature Center becomes:

$$D^{\gamma}_{air(E(g)} = 3.17E\text{-}02 * 1.0E\text{-}04\, t^{-0.321} * 0.0014 * \sum_i (Q_i * DF^{\gamma}_i)$$

which reduces to:

$$D^{\gamma}_{airE(g)} = 4.4E\text{-}09 * t^{-0.321} * \sum_i (Q_i * DF^{\gamma}_i) \quad (3\text{-}6d)$$

$$(\text{mrad}) = \left(\frac{\text{pCi-yr}}{\mu\text{Ci-m}^3}\right) * (\ ) * \Sigma\left(\mu\text{Ci} * \frac{\text{mrad-m}^3}{\text{pCi-yr}}\right)$$

Incorporating the specific OF and atmospheric dispersion factors for the "Rocks" yields the gamma air dose equation for elevated releases:

$$D^{\gamma}_{airR(e)} = 3.17E\text{-}02 * 2.1E\text{-}05 * t^{-0.155} * 0.0076 * \sum_i (Q_i * DF^{\gamma}_i)$$

which reduces to:

$$D^{\gamma}_{airR(e)} = 5.1E\text{-}09 * t^{-0.155} * \sum_i (Q_i * DF^{\gamma}_i) \quad (3\text{-}6e)$$

$$(\text{mrad}) = \left(\frac{\text{pCi-yr}}{\mu\text{Ci-m}^3}\right) * (\ ) * \Sigma\left(\mu\text{Ci} * \frac{\text{mrad-m}^3}{\text{pCi-yr}}\right)$$

For ground-level releases, the gamma air dose equation for the "Rocks" becomes:

$$D^{\gamma}_{airR(g)} = 3.17E\text{-}02 * 1.7E\text{-}04\, t^{-0.204} * 0.0076 * \sum_i (Q_i * DF^{\gamma}_i)$$

which reduces to:

$$D^{\gamma}_{airR(g)} = 4.1E\text{-}08 * t^{-0.204} * \sum_i (Q_i * DF^{\gamma}_i) \quad (3\text{-}6f)$$

$$(\text{mrad}) = \left(\frac{\text{pCi-yr}}{\mu\text{Ci-m}^3}\right) * (\ ) * \Sigma\left(\mu\text{Ci} * \frac{\text{mrad-m}^3}{\text{pCi-yr}}\right)$$

7.2.7.5 Beta Dose to Air from Noble Gases

Method I was derived as described in Part B, Section 7.2.5. The general form of the dose equation is:

$$D^{\beta}_{air} = 3.17E\text{-}02 * X/Q^{undepl}_{1\text{-}hr} * t^{-a} * \sum_i (Q_i * DF^{\beta}_i) \quad (3\text{-}7)$$

where all terms in the equation are as defined in Part B, Section 7.2.5.

Incorporating the specific OF and atmospheric dispersion factor for elevated releases into Equation 3-7 yields the following beta dose equation for the Science & Nature Center:

$$D_{airE(e)}^{\beta} = 3.17E\text{-}02 * 4.0E\text{-}05 * t^{-0.35} * 0.0014 * \sum_i (Q_i * DF_i^{\beta})$$

which reduces to:

$$D_{airE(e)}^{\beta} = 1.8E\text{-}09 * t^{-0.35} * \sum_i (Q_i * DF_i^{\beta}) \qquad (3\text{-}7c)$$

$$(\text{mrad}) = \left(\frac{\text{pCi-yr}}{\mu\text{Ci-m}^3}\right) * (\ ) * \Sigma\left(\mu\text{Ci} * \frac{\text{mrad-m}^3}{\text{pCi-yr}}\right)$$

For ground-level releases, the beta air dose equation for the Science & Nature Center becomes:

$$D_{airE(g)}^{\beta} = 3.17E\text{-}02 * 5.5E\text{-}04 * t^{-0.347} * 0.0014 * \sum_i (Q_i * DF_i^{\beta})$$

which reduces to:

$$D_{airE(g)}^{\beta} = 2.4E\text{-}08 * t^{-0.347} * \sum_i (Q_i * DF_i^{\beta}) \qquad (3\text{-}7d)$$

$$(\text{mrad}) = \left(\frac{\text{pCi-yr}}{\mu\text{Ci-m}^3}\right) * (\ ) * \Sigma\left(\mu\text{Ci} * \frac{\text{mrad-m}^3}{\text{pCi-yr}}\right)$$

Incorporating the specific OF and atmospheric dispersion factors for the "Rocks" yields the beta air dose equation for elevated releases:

$$D_{airR(e)}^{\beta} = 3.17E\text{-}02 * 1.6E\text{-}04 * t^{-0.249} * 0.0076 * \sum_i (Q_i * DF_i^{\beta})$$

which reduces to:

$$D_{airR(e)}^{\beta} = 3.9E\text{-}08 * t^{-0.249} * \sum_i (Q_i * DF_i^{\beta}) \qquad (3\text{-}7e)$$

$$(\text{mrad}) = \left(\frac{\text{pCi-yr}}{\mu\text{Ci-m}^3}\right) * (\ ) * \Sigma\left(\mu\text{Ci} * \frac{\text{mrad-m}^3}{\text{pCi-yr}}\right)$$

For ground-level releases, the beta air dose equation for the "Rocks" becomes:

$$D_{airR(g)}^{\beta} = 3.17E\text{-}02 * 1.9E\text{-}03 * t^{-0.267} * 0.0076 * \sum_i (Q_i * DF_i^{\beta})$$

which reduces to:

$$D^{\beta}_{airR(g)} = 4.6\text{E-}07 * t^{-0.267} * \sum_i (Q_i * DF_i^{\beta}) \qquad (3\text{-}7f)$$

$$(\text{mrad}) = \left(\frac{\text{pCi-yr}}{\mu\text{Ci-m}^3}\right) * (\ ) * \Sigma\left(\mu\text{Ci} * \frac{\text{mrad-m}^3}{\text{pCi-yr}}\right)$$

7.2.7.6 Critical Organ Dose from Iodines, Tritium and Particulates With Half-Lives Greater Than Eight Days

Method I was derived as described in Part B, Section 7.2.3. The Critical Organ Dose equations for receptors at the Science & Nature Center and the "Rocks" were derived from Equation 3-8. The following general equation incorporates (i) a ratio of the average 1-hour depleted atmospheric dispersion factor to the average annual depleted atmospheric dispersion factor, (ii) the unitless t^{-a} term, and (iii) the OF:

$$D_{co} = (X/Q)^{depl}_{1\text{-}hr} / (X/Q)^{depl}_{an} * t^{-a} * OF * \sum_i (Q_i * DFG_{ico})$$

$$(\text{mrem}) = \left(\frac{\text{sec}}{\text{m}^3}\right) / \left(\frac{\text{sec}}{\text{m}^3}\right) * (\ ) * (\ ) * \Sigma\left(\mu\text{Ci} * \frac{\text{mrem}}{\mu\text{Ci}}\right)$$

Applying the Science & Nature Center-specific factors for elevated release conditions produces the equation:

$$D_{coE(e)} = (3.72\text{E-}05)/(1.56\text{E-}06) * t^{-0.349} * 0.0014 * \sum_i (Q_i * DFG_{ico\,E(e)})$$

which reduces to:

$$D_{coE(e)} = 3.3\text{E-}02 * t^{-0.349} * \sum_i (Q_i * DFG_{ico\,E(e)}) \qquad (3\text{-}8c)$$

$$(\text{mrem}) = (\ ) * (\ ) * \Sigma\left(\mu\text{Ci} * \frac{\text{mrem}}{\mu\text{Ci}}\right)$$

For a ground-level release, the equation for a receptor at the Science & Nature Center is:

$$D_{coE(g)} = (5.21\text{E-}04)/(2.23\text{E-}05) * t^{-0.347} * 0.0014 * \sum_i (Q_i * DFG_{ico\,E(g)})$$

which reduces to:

$$D_{coE(g)} = 3.3\text{E-}02 * t^{-0.347} * \sum_i (Q_i * DFG_{ico\,E(g)}) \qquad (3\text{-}8d)$$

$$(\text{mrem}) = (\ ) * (\ ) * \Sigma\left(\mu\text{Ci} * \frac{\text{mrem}}{\mu\text{Ci}}\right)$$

The specific Critical Organ Dose equation for a receptor at the "Rocks" under elevated release conditions is:

$$D_{coR(e)} = (1.54\,E\text{-}04)/(1.61\,E\text{-}05) * t^{-0.248} * 0.0076 * \sum_i (Q_i * DFG_{ico\,R(e)})$$

which reduces to:

$$D_{coR(e)} = 7.3\,E\text{-}02 * t^{-0.248} * \sum_i (Q_i * DFG_{ico\,R(e)}) \qquad (3\text{-}8e)$$

$$(\text{mrem}) = (\ ) * (\ ) * \Sigma\left(\mu\text{Ci} * \frac{\text{mrem}}{\mu\text{Ci}}\right)$$

For a ground-level release, the equation for a receptor at the "Rocks" is:

$$D_{coR(g)} = (1.80\,E\text{-}03)/(1.59\,E\text{-}04) * t^{-0.267} * 0.0076 * \sum_i (Q_i * DFG_{ico\,R(g)})$$

which reduces to:

$$D_{coR(g)} = 8.6\,E\text{-}02 * t^{-0.267} * \sum_i (Q_i * DFG_{ico\,R(g)}) \qquad (3\text{-}8f)$$

$$(\text{mrem}) = (\ ) * (\ ) * \Sigma\left(\mu\text{Ci} * \frac{\text{mrem}}{\mu\text{Ci}}\right)$$

The special receptor equations can be applied under the following conditions (otherwise, justify Method I or consider Method II):

1. Normal operations (nonemergency event).

2. Applicable radionuclide releases via the station vents to the atmosphere.

If Method I cannot be applied, or if the Method I dose exceeds this limit, or if a more refined calculation is required, then Method II may be applied.

Table B.7-2

Environmental Parameters for Gaseous Effluents at Seabrook Station

(Derived from Reference A)*

Variable			Vegetables		Cow Milk		Goat Milk		Meat	
			Stored	Leafy	Pasture	Stored	Pasture	Stored	Pasture	Stored
YV	Agricultural Productivity	(Kg/M^2)	2.	2.	0.70	2.	0.70	2.	0.70	2
P	Soil Surface Density	(Kg/M^2)	240.	240.	240.	240.	240.	240.	240.	240
T	Transport Time to User	(HRS)			48.	48.	48.	48.	480.	480
TB	Soil Exposure Time [1]	(HRS)	131400.	131400.	131400.	131400.	131400.	131400.	131400.	131400.
TE	Crop Exposure Time to Plume	(HRS)	1440.	1440.	720.	1440.	720.	1440.	720.	1440
TH	Holdup After Harvest	(HRS)	1440.	24.	0.	2160.	0.	2160.	0.	2160
QF	Animals Daily Feed	(Kg/DAY)			50.	50.	6.	6.	50.	50
FP	Fraction of Year on Pasture[2]				0.50		0.50		0.50	
FS	Fraction Pasture when on Pasture[3]				1.		1.		1.	
FG	Fraction of Stored Veg. Grown in Garden		0.76							
FL	Fraction of Leafy Veg. Grown in Garden			1.0						
FI	Fraction Elemental Iodine = 0.5									
H	Absolute Humidity = 5.60[4]	(gm/m^3)								

* Regulatory Guide 1.109, Rev. 1

Table B.7-2

Environmental Parameters for Gaseous Effluents at Seabrook Station

Notes:

(1) For Method II dose/dose rate analyses of identified radioactivity releases of less than one year, the soil exposure time for that release may be set at 8760 hours (1 year) for all pathways.

(2) For Method II dose/dose rate analyses performed for releases occurring during the first or fourth calendar quarters, the fraction of time animals are assumed to be on pasture is zero (nongrowing season). For the second and third calendar quarters, the fraction of time on pasture (FP) will be set at 1.0. FP may also be adjusted for specific farm locations if this information is so identified and reported as part of the land use census.

(3) For Method II analyses, the fraction of pasture feed while on pasture may be set to less than 1.0 for specific farm locations if this information is so identified and reported as part of the land use census.

(4) For all Method II analyses, an absolute humidity value equal to 5.6 (gm/m^3) shall be used to reflect conditions in the Northeast (Reference Health Physics Journal, Vol. 39 (August), 1980; Page 318-320, Pergammon Press).

Table B.7-3

Usage Factors for Various Gaseous Pathways at Seabrook Station

(from Reference A, Table E-5)*

Maximum Receptor:

Age Group	Vegetables (kg/yr)	Leafy Vegetables (kg/yr)	Milk (1/yr)	Meat (kg/yr)	Inhalation (m^3/yr)
Adult	520.00	64.00	310.00	110.00	8000.00
Teen	630.00	42.00	400.00	65.00	8000.00
Child	520.00	26.00	330.00	41.00	3700.00
Infant	0.00	0.00	330.00	0.00	1400.00

The "Rocks" and Science & Nature Center:

Age Group	Vegetables (kg/yr)	Leafy Vegetables (kg/yr)	Milk (1/yr)	Meat (kg/yr)	Inhalation (m^3/yr)
Adult	0.00	0.00	0.00	0.00	8000.00
Teen	0.00	0.00	0.00	0.00	8000.00
Child	0.00	0.00	0.00	0.00	3700.00
Infant	0.00	0.00	0.00	0.00	1400.00

* Regulatory Guide 1.109

7.3 Receptor Points and Average Atmospheric Dispersion Factors for Important Exposure Pathways

The gaseous effluent dose equations (Method I) have been simplified by assuming an individual whose behavior and living habits inevitably lead to a higher dose than anyone else. The following exposure pathways to gaseous effluents listed in Regulatory Guide 1.109 (Reference A) have been considered:

1. Direct exposure to contaminated air;
2. Direct exposure to contaminated ground;
3. Inhalation of air;
4. Ingestion of vegetables;
5. Ingestion of goat's milk; and
6. Ingestion of meat.

Part B, Section 7.3.1 details the selection of important off-site and on-site locations and receptors. Part B, Section 7.3.2 describes the atmospheric model used to convert meteorological data into atmospheric dispersion factors. Part B, Section 7.3.3 presents the maximum atmospheric dispersion factors calculated at each of the off-site receptor locations.

7.3.1 Receptor Locations

The most limiting site boundary location in which individuals are, or likely to be located as a place of residence was assumed to be the receptor for all the gaseous pathways considered. This provides a conservative estimate of the dose to an individual from existing and potential gaseous pathways for the Method I analysis.

This point is the west sector, 974 meters from the center of the reactor units for undepleted, depleted, and gamma X/Q calculations, and the northwest section, 914 meters for calculations with D/Q the dispersion parameter.

The site boundary in the NNE through SE sectors is located over tidal marsh (e.g., over water), and consequently are not used as locations for determining maximum off-site receptors (Reference NUREG 0133).

Two other locations (on-site) were analyzed for direct ground plane exposure and inhalation only. They are the "Rocks" (recreational site) and the Education Center shown on Figure 5.1-1 of the Technical Specifications.

7.3.2 Seabrook Station Atmospheric Dispersion Model

The time average atmospheric dispersion factors for use in both Method I and Method II are computed for routine releases using the AEOLUS-2 Computer Code (Reference B).

AEOLUS-2 produces the following average atmospheric dispersion factors for each location:

1. Undepleted X/Q dispersion factors for evaluating ground level concentrations of noble gases;

2. Depleted X/Q dispersion factors for evaluating ground level concentrations of iodines and particulates;

3. Gamma X/Q dispersion factors for evaluating gamma dose rates from a sector averaged finite noble gas cloud (multiple energy undepleted source); and

4. D/Q deposition factors for evaluating dry deposition of elemental radioiodines and other particulates.

Gamma dose rate is calculated throughout this ODCM using the finite cloud model presented in "Meteorology and Atomic Energy - 1968" (Reference E, Section 7-5.2.5). That model is implemented through the definition of an effective gamma atmospheric dispersion factor, $[X/Q^{\gamma}]$ (Reference B, Section 6), and the replacement of X/Q in infinite cloud dose equations by the $[X/Q^{\gamma}]$.

7.3.3 Average Atmospheric Dispersion Factors for Receptors

The calculation of Method I and Method II atmospheric diffusion factors (undepleted CHI/Q, depleted CHI/Q, D/Q, and gamma CHI/Q values) utilize a methodology generally consistent with US NRC Regulatory Guide 1.111 (Revision 1) criteria and the methodology for calculating routine release diffusion factors as represented by the XOQDOQ computer code (NUREG/CR-2919). The primary vent stack is treated as a "mixed-mode" release, as defined in Regulatory Guide 1.111. Effluents are considered to be part-time ground level/part-time elevated releases depending on the ratio of the primary vent stack effluent exit velocity relative to the speed of the prevailing wind. All other release points (e.g., Turbine Building and Chemistry lab hoods) are considered ground-level releases.

In addition, Regulatory Guide 1.111 discusses the concept that constant mean wind direction models like AEOLUS-2 do not describe spatial and temporal variations in airflow such as the recirculation of airflow which can occur during prolonged periods of atmospheric stagnation. For sites near large bodies of water like Seabrook, the onset and decay of sea breezes can also result in airflow reversals and curved trajectories. Consequently, Regulatory Guide 1.111 states that adjustments to constant mean wind direction model outputs may be necessary to account for such spatial and temporal variations in air flow trajectories. Recirculation correction factors have been applied to the diffusion factors. The recirculation correction factors used are compatible to the "default open terrain" recirculation correction factors used by the XOQDOQ computer code.

The relative deposition rates, D/Q values, were derived using the relative deposition rate curves presented in Regulatory Guide 1.111 (Revision 1). These curves provide estimates of deposition rates as a function of plume height, stability class, and plume travel distance.

Receptor Locations

For ground-level releases, the downwind location of "The Rocks" (244m NE/ENE) and the Science & Nature Center (406m SW) were taken as the distance from the nearest point on the Unit 1 Administrative Building/Turbine Building complex. For the site boundary, the minimum distances from the nearest point on the Administration Building/Turbine Building complex to the site boundary within a 45-degree sector centered on the compass direction of interest as measured from UFSAR Figure 2.1-4A were used (with the exception that the NE-NE-ENE-E-ESE-SE site boundary sectors were not evaluated because of their over-water locations).

For primary vent stack releases, the distances from the Unit 1 primary vent stack to "The Rocks" (244m NE) and the Science & Nature Center (488m SW) as measured from a recent site aerial photograph were used. For the site boundary, the minimum distances from the Unit 1 primary vent stack to the site boundary within a 45-degree sector centered on the compass direction of interest as measured from UFSAR Figure 2.1-4A were used (with the exception that the NNE-NE-ENE-E-ESE-SE site boundary sectors were not evaluated because of their over-water locations).

Meteorological Data Bases

For "The Rocks" and Science & Nature Center receptors, the diffusion factors represent six-year averages during the time period January 1980 through December 1983 and January 1987 through December 1988 (with the exception that, because of low data recovery, April 1979 and May 1979 were substituted for April 1980 and May 1980). For the site boundary receptors, both six-year average growing season (April through September) and year-round (January through December) diffusion factors were generated, with the higher of the two chosen to represent the site boundary.

The meteorological diffusion factor used in the development of the ODCM Method I dose models are summarized on Tables B.7-4 through B.7-6.

Table B.7-4

Seabrook Station Long-Term Average Dispersion Factors*

Primary Vent Stack

	Dose Rate to Individual			Dose to Air		Dose to Critical Organ
	Total Body	Skin	Critical Organ	Gamma	Beta	Thyroid
X/Q depleted $\left(\frac{sec}{m^3}\right)$	-	-	7.5E-07	-	-	7.5E-07
X/Q undepleted $\left(\frac{sec}{m^3}\right)$	-	8.2E-07	-	-	8.2E-07	-
D/Q $\left(\frac{1}{m^2}\right)$	-	-	1.5E-08**	-	-	1.5E-08
X/Q^{γ} $\left(\frac{sec}{m^3}\right)$	8.5E-07	8.5E-07	-	8.5E-07	-	-

* West site boundary, 974 meters from Containment Building

** Northwest site boundary, 914 meters from Containment Building

Table B.7-5

Seabrook Station Long-Term Average Dispersion Factors for Special (On-Site) Receptors Primary Vent Stack

	Dose Rate to Individual			Dose to Air		Dose to Critical Organ
	Total Body	Skin	Critical Organ	Gamma	Beta	Thyroid
Education Center: (SW - 488 meters)						
X/Q depleted $\left(\frac{sec}{m^3}\right)$	-	-	1.5E-06	-	-	1.5E-06
X/Q undepleted $\left(\frac{sec}{m^3}\right)$	-	1.6E-06	-	-	1.6E-06	-
D/Q $\left(\frac{1}{m^2}\right)$	-	-	2.7E-08	-	-	-
X/Q^{γ} $\left(\frac{sec}{m^3}\right)$	1.1E-06	1.1E-06	-	1.1E-06	-	-
The "Rocks": (ENE - 244 meters)						
X/Q depleted $\left(\frac{sec}{m^3}\right)$	-	-	1.6E-05	-	-	1.6E-05
X/Q undepleted $\left(\frac{sec}{m^3}\right)$	-	1.7E-05	-	-	1.7E-05	-
D/Q $\left(\frac{1}{m^2}\right)$	-	-	1.1E-07	-	-	-
$X/Q^{\gamma}\left(\frac{sec}{m^3}\right)$	5.0E-06	5.0E-06	-	5.0E-06	-	-

Table B.7-6

Seabrook Station

Long-Term Atmospheric Diffusion and Deposition Factors

Ground-Level Release Pathway

Diffusion Factor	RECEPTOR[a]		
	The Rocks	Science & Nature Center	Off-Site
Undepleted CHI/Q, sec/m^3	1.6×10^{-4} (244m ENE)	2.3×10^{-5} (406m SW)	1.0×10^{-5} (823m W)
Depleted CHI/Q, sec/m^3	1.5×10^{-4} (244m ENE)	2.1×10^{-5} (406m SW)	9.6×10^{-6} (823m W)
D/Q, m^{-2}	5.1×10^{-7} (244m ENE)	1.0×10^{-7} (406m SW)	5.1×10^{-8} (823m W)
Gamma CHI/Q, sec/m^3	2.6×10^{-5} (244m ENE)	5.3×10^{-6} (406m SW)	3.4×10^{-6} (823m W)

(a) The highest site boundary diffusion and deposition factors occurred during the April through September growing season. Note that for the primary vent stack release pathway, none of the off-site receptor diffusion and deposition factors (located at 0.25-mile increments beyond the site boundary) exceeded the site boundary diffusion and deposition factors.

8.0 BASES FOR LIQUID AND GASEOUS MONITOR SETPOINTS

8.1 Basis for the Liquid Waste Test Tank Monitor Setpoint

The liquid waste test tank monitor setpoint must ensure that the limits of Part A Control C.5.1 are not exceeded in combination with any other site discharge pathways. The liquid waste test tank monitor is placed upstream of the major source of dilution flow.

The derivation of Equation 5-1 begins with the general equation for the response of a radiation monitor:

$$R = \sum C_{\gamma i} \; S_{li} \qquad (8\text{-}1)$$

$$(\text{cps}) = \left(\frac{\mu\text{Ci}}{\text{ml}}\right)\left(\frac{\text{cps - ml}}{\mu\text{Ci}}\right)$$

where:

R = Response of the monitor to radioactivity (cps).

S_{li} = Detector counting efficiency for radionuclide "i" (cps/(μCi/ml)).

$C_{\gamma i}$ = Activity concentration of each gamma emitting radionuclide "i" in the mixture that the monitor has a response efficiency sufficient to detect (μCi/ml).

The detector calibration procedure for the liquid waste test tank monitor at Seabrook Station establishes counting efficiency by use of a known calibration source standard and a linearity response check. Therefore, in Equation 8-1 one may substitute S_l for S_{li}, where S_l is the detector counting efficiency determined from the calibration procedure. Therefore, Equation 8-1 becomes:

$$R = S_i \; \sum \; C_\gamma \qquad (8\text{-}2)$$

$$(\text{cps}) = \left(\frac{\text{cps - ml}}{\mu\text{Ci}}\right)\left(\frac{\mu\text{Ci}}{\text{ml}}\right)$$

The ECL for a given radionuclide must not be exceeded at the point of discharge to the environment. When a mixture of radionuclides is present, 10 CFR 20 specifies that the concentration (excluding dissolved and entrained noble gases) at the point of discharge shall be limited as follows:

$$\sum \frac{Cd_i}{ECL_i} \leq 10 \qquad (8\text{-}3)$$

where:

C_{di} = Activity concentration of radionuclide "i" determined to be present in the mixture at the point of discharge to the environment (μCi/ml).

ECL_i = Effluent concentration limit (ECL) for radionuclide "i" (except for dissolved and entrained noble gas) in μCi/ml as specified in 10 CFR 20, Appendix B, Table 2. The limit for the sum of all noble gases in the waste discharge is 2E-04 μCi/ml. (See ODCM Appendix B for listing.)

The activity concentration of radionuclide "i" at the point of discharge is related to the activity concentration of each radionuclide at the monitor as follows:

$$C_{di} = \frac{F_m}{F_d}\left(C\gamma_i + C\beta_i\right)$$

$$\left(\frac{\mu Ci}{ml}\right) = \left(\frac{gpm}{gpm}\right)\left(\frac{\mu Ci}{ml}\right)$$

and with equivalence of $C_i = (C\gamma_i + C\beta_i)$, Equation 8-4 can be written as

$$C_{di} = \frac{F_m}{F_d} C_i$$

where:

F_m = Flow rate past monitor (gpm)

F_d = Flow rate out of discharge tunnel (gpm)

$C\beta_i$ = Activity concentration of non gamma emitting radionuclide "i" in the mixture at the monitor for which the monitor response is inefficient to detect (μCi/ml).

C_i = The activity concentration of each radionuclide "i" in the waste stream. This includes both gamma and non gamma emitters, such as tritium.

Substituting the right half of Equation 8-4 for C_{di} in Equation 8-3, and solving for F_d/F_m yields the dilution factor needed to complete Equation 8-3:

$$DF_{min} \leq \frac{F_d}{F_m} \geq \sum_i \frac{C_i}{10ECL_i} \qquad (8\text{-}5)$$

$$\left(\frac{gpm}{gpm}\right) \quad \left(\frac{\mu Ci - ml}{ml - \mu Ci}\right)$$

where:

ECL_i = Effluent concentration limit (ECL) for radionuclide "i" (except for dissolved and entrained noble gas) in µCi/ml as specified in 10 CFR 20, Appendix B, Table 2. For noble gases, a value of 2E-04 µCi/ml is used for the limit of the sum of noble gases in the waste stream.

If F_d/F_m is less than DF_{min}, then the tank may not be discharged until either F_d or F_m or both are adjusted such that:

$$DF_{min} \leq \frac{F_d}{F_m} \qquad (8\text{-}5)$$

The maximum allowable discharge flow rate past the monitor can be found by setting F_m to F_{max} and its equivalents, i.e:

$$F_{max} = \frac{F_d}{DF_{min}}$$

Usually F_d/F_m is greater than DF_{min} (i.e., there is more dilution than necessary to comply with Equation 8-3), but must be satisfied since the monitor can only detect the gamma emitting portion of the waste stream. The response of the liquid waste test tank monitor at the setpoint is therefore:

$$R_{setpoint} = f_1 \times \frac{F_d}{F_m \times DF_{min}} \times S_1 \Sigma C\gamma_i$$

$$(cps) \ (\ ) \qquad (\ ) \ \left(\frac{cps - ml}{\mu Ci}\right)\left(\frac{\mu Ci}{ml}\right) \qquad (8\text{-}6)$$

or with F_{max} substituted into Equation 8-6 for the maximum allowable discharge flow rate $\left(\frac{F_d}{DF_{min}}\right)$, the setpoint equation can be stated also as:

$$R_{setpoint} = f_1 \times \frac{F_{max}}{F_m} \times S_i \Sigma C\gamma_i$$

where f_1 is equal to the fraction of the total concentration of ECL at the discharge point to the environment to be associated with the test tank effluent pathway, such that the sum of the fractions of the five liquid discharge pathways is equal to or less than one ($f_1 + f_2 + f_3 + f_4 + f_5 \leq 1$). The five monitored liquid effluent pathways are derived from: (f_1) the Liquid Waste Test Tanks, (f_2) the Turbine Building Sump, (f_3) Steam Generator Blowdown, (f_4) Primary Component Cooling, and (f_5) Water Treatment Liquid Effluent (the Condensate Polishing System).

The monitoring system is designed to incorporate the detector efficiency, S_1, into its software. This results in an automatic readout in µCi/ml or µCi/cc for the monitor response. Since the conversion for changing cps to µCi/ml is inherently done by the system software, the monitor response setpoint can be calculated in terms of the total waste test tank activity concentration in µCi/ml determined by the laboratory analysis. Therefore, the setpoint calculation for the liquid waste test tank is:

$$R_{setpoint} = f_1 \times \frac{F_d}{F_m \times DF_{min}} \times \Sigma \quad C\gamma_i \qquad (5\text{-}1)$$

$$\left(\frac{\mu Ci}{ml}\right) \quad ( ) \quad ( ) \quad \left(\frac{\mu Ci}{ml}\right)$$

All liquid effluent pathway monitors are similar to the Liquid Waste Test Tank Monitor in design and function as described above for ensuring the plant site's effluent concentration limits are not exceeded in combination with each other.

8.2 Basis for the Plant Vent Wide Range Gas Monitor Setpoints

The setpoints of the plant vent wide range gas monitors must ensure that Part A Control C.7.1.1.a is not exceeded. Part B, Sections 3.4 and 3.5 show that Equations 3-3 and 3-4 are acceptable methods for determining compliance with that Part A Control. Which equation (i.e., dose to total body or skin) is more limiting depends on the noble gas mixture. For the limiting setpoint case, the gas mixture associated with the fuel gap activity at time of shutdown (UFSAR Table 15.7-20) indicates that the total body dose rate to the maximum offsite receptor is the limiting dose rate type. The derivations of Equations 5-5 and 5-6 begin with the general equation for the response R of a radiation monitor:

$$R = \sum_i S_{gi} \; C_{mi} \qquad (8\text{-}7)$$

$$(\text{cpm}) = \left(\frac{\text{cpm} - \text{cm}^3}{\mu\text{Ci}}\right)\left(\frac{\mu\text{Ci}}{\text{cm}^3}\right)$$

where:

R = Response of the instrument (cpm)

S_{gi} = Detector counting efficiency for noble gas "i" (cpm/(μCi/cm^3))

C_{mi} = Activity concentration of noble gas "i" in the mixture at the noble gas activity monitor (μCi/cm^3)

C_{mi}, the activity concentration of noble gas "i" at the noble gas activity monitor, may be expressed in terms of $\dot{Q}_i$ by dividing by F, the appropriate flow rate. In the case of the plant vent noble gas activity monitors the appropriate flow rate is the plant vent flow rate.

$$C_{mi} = \dot{Q}_i \; \frac{1}{F} \qquad (8\text{-}8)$$

$$\left(\frac{\mu\text{Ci}}{\text{cm}^3}\right) = \left(\frac{\mu\text{Ci}}{\text{sec}}\right)\left(\frac{\text{sec}}{\text{cm}^3}\right)$$

where:

$\dot{Q}_i$ = The relative release rate of noble gas "i" identified or postulated to be in the mixture.

F = Appropriate flow rate (cm^3/sec)

Substituting the right half of Equation 8-8 into Equation 8-7 for C_{mi} yields:

$$R = \sum_i S_{gi} \; \dot{Q}_i \; \frac{1}{F} \qquad (8\text{-}9)$$

$$(\text{cpm}) = \left(\frac{\text{cpm} - \text{cm}^3}{\mu\text{Ci}}\right)\left(\frac{\mu\text{Ci}}{\text{sec}}\right)\left(\frac{\text{sec}}{\text{cm}^3}\right)$$

As in the case before, for the liquid waste test tank monitor, the plant vent wide range gas monitor establishes the detector counting efficiency by use of a calibration source. Therefore, S_g can be substituted for S_{gi} in Equation 8-9, where S_g is the detector counting efficiency determined from the calibration procedure. Therefore, Equation 8-9 becomes:

$$R = S_g \quad \frac{1}{F} \sum_i \dot{Q}_i \tag{8-10}$$

$$(cpm) = \left(\frac{cpm - cm^3}{\mu Ci}\right)\left(\frac{sec}{cm^3}\right)\left(\frac{\mu Ci}{sec}\right)$$

The total body dose rate due to noble gases is determined with Equation 3-3a:

$$\dot{D}_{tb(e)} = 0.85 * \sum_i (\dot{Q}_i * DFB_i) \tag{3-3a}$$

$$\left(\frac{mrem}{yr}\right) = \left(\frac{pCi - sec}{\mu Ci - m^3}\right) \quad \left(\frac{\mu Ci}{sec}\right) \quad \left(\frac{mrem - m^3}{pCi - yr}\right)$$

where:

$\dot{D}_{tb(e)}$ = Total body dose rate (mrem/yr)

0.85 = (1.0E+06) x (8.5E-07) (pCi-sec/μCi-m^3)

1E+06 = Number of pCi per μCi (pCi/μCi)

8.5E-07 = $[X/Q]^\gamma$, maximum off-site average gamma atmospheric dispersion factor (sec/m^3) for primary vent stack releases

$\dot{Q}_i$ = The relative release rate of noble gas "i" identified or postulated to be in the gas mix (μCi/sec).

DFB_i = Total body dose factor (see Table B.1-10) (mrem-m^3/pCi-yr)

A composite total body gamma dose factor, DFB_c, may be defined such that:

$$DFB_c \sum_i \dot{Q}_i = \sum_i \dot{Q}_i \; DFB_i \qquad (8\text{-}11)$$

$$\frac{\text{mrem} - \text{m}^3}{\text{pCi} - \text{yr}} \left(\frac{\mu\text{Ci}}{\text{sec}}\right) = \left(\frac{\mu\text{Ci}}{\text{sec}}\right) \left(\frac{\text{mrem} - \text{m}^3}{\text{pCi} - \text{yr}}\right)$$

Solving Equation 8-11 for DFB_c yields:

$$DFB_c = \frac{\sum_i \dot{Q}_i DFB_i}{\sum_i \dot{Q}_i} \qquad (5\text{-}7)$$

Part A Control C.7.1.1.a limits the dose rate to the total body from noble gases at any location at or beyond the site boundary to 500 mrem/yr. By setting $\dot{D}_{tb}$ equal to 500 mrem/yr and substituting DFB_c for DFB_i in Equation 3-3, one may solve for $\sum_i \dot{Q}_i$ at the limiting whole body noble gas dose rate:

$$\sum_i \dot{Q}_i = 588 \; \frac{1}{DFB_c} \qquad (8\text{-}12)$$

$$\left(\frac{\mu\text{Ci}}{\text{sec}}\right) = \left(\frac{\text{mrem} - \mu\text{Ci} - \text{m}^3}{\text{yr} - \text{pCi} - \text{sec}}\right) \left(\frac{\text{pCi} - \text{yr}}{\text{mrem} - \text{m}^3}\right)$$

Substituting this result for $\sum_i \dot{Q}_i$ in Equation 8-10 yields R_{tb}, the response of the monitor at the limiting noble gas total body dose rate:

$$R_{tb} = 588 \; S_g \; \frac{1}{F} \; \frac{1}{DFB_c} \qquad (8\text{-}13)$$

$$(\text{cpm}) = \left(\frac{\text{mrem} - \mu\text{Ci} - \text{m}^3}{\text{yr} - \text{pCi} - \text{sec}}\right) \left(\frac{\text{cpm} - \text{cm}^3}{\mu\text{Ci}}\right) \left(\frac{\text{sec}}{\text{cm}^3}\right) \left(\frac{\text{pCi} - \text{yr}}{\text{mrem} - \text{m}^3}\right)$$

The skin dose rate due to noble gases is determined with Equation 3-4a:

$$\dot{D}_{skin(e)} = \sum_i (\dot{Q}_i * DF'_{i(e)}) \qquad (3\text{-}4a)$$

$$\frac{\text{mrem}}{\text{yr}} = \sum \left(\frac{\mu\text{Ci}}{\text{sec}}\right) \left(\frac{\text{mrem - sec}}{\mu\text{Ci - yr}}\right)$$

where:

$\dot{D}_{skin(e)}$ = Skin dose rate (mrem/yr)

$\dot{Q}_i$ = As defined above.

$DF'_{i\,(e)}$ = Combined skin dose factor (see Table B.1-10) (mrem-sec/μCi-yr)

A composite combined skin dose factor, DF'_c, may be defined such that:

$$DF'_c * \sum_i \dot{Q}_i = \sum_i (\dot{Q}_i * DF'_{i(e)}) \qquad (8\text{-}14)$$

$$\left(\frac{\text{mrem - sec}}{\mu\text{Ci - yr}}\right)\left(\frac{\mu\text{Ci}}{\text{sec}}\right) = \left(\frac{\mu\text{Ci}}{\text{sec}}\right)\left(\frac{\text{mrem - sec}}{\mu\text{Ci - yr}}\right)$$

Solving Equation 8-14 for DF'_c yields:

$$DF'_c = \frac{\sum_i \dot{Q}_i DF'_{i\,(e)}}{\sum_i \dot{Q}_i} \qquad (5\text{-}8)$$

Part A Control C.7.1.1.a limits the dose rate to the skin from noble gases at any location at or beyond the site boundary to 3,000 mrem/yr. By setting $\dot{D}_{skin}$ equal to 3,000 mrem/yr and substituting DF'_c for DF'_i in Equation 3-4 one may solve for $\sum_i \dot{Q}_i$ at the limiting skin noble gas dose rate:

$$\sum_i \dot{Q}_i = 3{,}000 \frac{1}{DF'_c} \qquad (8\text{-}15)$$

$$\left(\frac{\mu Ci}{sec}\right) \quad \left(\frac{mrem}{yr}\right)\left(\frac{\mu Ci - yr}{mrem - sec}\right)$$

Substituting this result for $\sum_i \dot{Q}_i$ 0in Equation 8-10 yields R_{skin}, the response of the monitor at the limiting noble gas skin dose rate:

$$R_{skin} = 3{,}000 \quad S_g \quad \frac{1}{F} \quad \frac{1}{DF'_c}$$

$$(cpm) \quad \left(\frac{mrem}{yr}\right)\left(\frac{cpm - cm^3}{\mu Ci}\right)\left(\frac{sec}{cm^3}\right)\left(\frac{\mu Ci - yr}{mrem - sec}\right) \qquad (8\text{-}16)$$

As with the liquid monitoring system, the gaseous monitoring system is also designed to incorporate the detector efficiency, S_g, into its software. The monitor also converts the response output to a release rate (µCi/sec) by using a real time stack flow rate measurement input. Therefore, multiplying by the main plant vent flow rate measurement (F), the Equations 8-13 and 8-16 become:

$$R_{tb(e)} = 588 \quad \frac{1}{DFB_e} \qquad (5\text{-}5)$$

$$\left(\frac{\mu Ci}{sec}\right) = \left(\frac{mrem - \mu Ci - m^3}{yr - pCi - sec}\right)\left(\frac{pCi - yr}{mrem - m^3}\right)$$

$$R_{skin(e)} = 3{,}000 \quad \frac{1}{DF'_c} \qquad (5\text{-}6)$$

$$\left(\frac{\mu Ci}{sec}\right) = \left(\frac{mrem}{yr}\right)\left(\frac{\mu Ci - yr}{mrem - sec}\right)$$

These equations assume that the main plant vent is the only release point contributing to the determination of limiting offsite dose rate. The Control dose rate limits (500 mrem/yr and 3000 mrem/yr for total body and skin, respectively) apply to combination of all release points to the limiting offsite receptor. Administrative fractions (f) should be applied to main plant vent setpoint calculation as a multiplier, and any other release points, such that the summation of all fractions is less than or equal to 1. This provides for the combined impact of all release points to ensure that selected setpoints alarm at or before the site dose rate limits is exceeded.

8.3 Basis for PCCW Head Tank Rate-of-Change Alarm Setpoint

The PCCW head tank rate-of-change alarm will work in conjunction with the PCCW radiation monitor to alert the operator in the Main Control Room of a leak to the Service Water System from the PCCW System. For the rate-of-change alarm, a setpoint based on detection of an activity level of 10^{-8} µCi/cc in the discharge of the Service Water System has been selected. This activity level was chosen because it is the minimum detectable level of a service water monitor if such a monitor were installed. The use of rate-of-change alarm with information obtained from the liquid sampling and analysis commitments described in Table A.6.1-1 of Part A ensure that potential releases from the Service Water System are known. Sampling and analysis requirements for the Service Water System extend over various operating ranges with increased sampling and analysis at times when leakage from the PCCW to the service water is occurring and/or the activity level in the PCCW is high.

8.4 Basis for Waste Gas Processing System Monitors (RM-6504 and RM-6503)

The maximum allowable setpoint for the waste gas system monitors (response in $\mu Ci/cm^3$) can be determined by equating the limiting off-site noble gas dose rate from the plant vent to the total body or skin dose rate limits of Part A Control C.7.1.1.a, assuming that all the activity detected by the vent wide-range gas monitors is due to waste gas system discharges.

By evaluating the noble gas radionuclide with the most limiting dose factor as given on Table B.1-10, a conservative activity release rate from the plant vent for both whole body and skin dose rate conditions can be calculated. From Table B.1-10, Kr-89 is seen to be the most restrictive individual noble gas if it were present in the effluent discharge. Applying plant vent setpoint equation 5-5 for the whole body, and equation 5-6 for the skin, the maximum allowable plant vent stack release rate can be calculated as follows:

$$R_{tb} = 588 \ 1/DFB_c \qquad (5\text{-}5)$$

where:

R_{tb} = plant vent maximum release rate ($\mu Ci/sec$) based on the whole body does rate limit of 500 mrem/yr

DFB_c = 1.66E-02 (mrem-m^3/pCi-yr), whole body dose factor for Kr-89

588 = conversion factor (mrem-μCi-m^3/yr-pCi-sec)

Therefore:

R_{tb} = 588 1/1.66E-02

= 35,421 $\mu Ci/sec$ maximum release rate at plant vent

Next, the skin dose rate limit is evaluated from equation 5-6 in a similar fashion as follows:

$$R_{skin} = 3000 \ 1/DF'_c \qquad (5\text{-}6)$$

where:

R_{skin} = plant vent maximum release rate ($\mu Ci/sec$) based on skin dose rate limit of 3000 mrem/yr.

DF'_c = 2.45E-02 mrem-sec/μCi-yr skin dose factor for Kr-89

3000 = Site boundary skin dose rate limit (mrem/yr)

therefore:

R_{skin} = 3000 (mrem/yr) 1/2.45E-02(mrem-sec/μCi-yr)

= 122,449 μCi/sec from the plant vent

Comparing the release rate limit for the whole body to that for the skin (i.e., 35,421 μCi/sec vs 122,449 μCi/sec, respectively) it is determined that the release rate for the whole body is limiting.

Next, to get the maximum plant vent release rate from the waste gas system discharge, equate the plant vent maximum release rate limit for the whole body equal to the waste gas system activity concentration times its flow rate to the plant vent, i.e.:

R_{tb} = 35,421(μCi/sec) = R_{wg}(μCi/cm^3) F_{wg}(cm^3/sec)

or solving for R_{wg}:

R_{wg}(μCi/cm^3) = 35,421(μCi/sec) / F_{wg}(cm^3/sec)

where:

R_{wg} = maximum concentration (setpoint limit) at the waste gas system monitors

F_{wg} = waste gas design flow of 566.4 cm^3/sec (1.2 cfm)

therefore:

R_{wg}(μCi/cm^3) = 35,421(μCi/sec) / 566.4(cm^3/sec)

= 62.5 μCi/cm^3

This represents the maximum waste gas discharge concentration which would equal the site boundary whole body dose rate limit for plant vent releases. Administrative controls may set alert alarm and high alarm (waste gas isolation) setpoints on the waste gas monitors as some multiple of expected activity concentration, such as 1.5 and 2 times, respectively, as long as the maximum setpoint does not exceed 62.5 μCi/cm^3. This provides operational controls to be exercised before any waste gas discharges could equate to the Part A Control C.7.1.1.a.

The primary process monitor noted in Part A Control C.5.2 is RM-6504, which is downstream of the waste gas discharge compressor at the end of the process system. Monitor RM-6503 is on the inlet side of the compressor downstream of the charcoal delay beds, and is considered as an alternate monitor if RM-6504 is inoperable. For the purpose of setting the maximum discharge setpoint, RM-6503 is treated the same as RM-6504, which assumes no additional source reduction before discharge to the plant vent.

8.5 Basis for the Main Condenser Air Evacuation Monitor Setpoint (RM-6505)

The maximum allowable setpoint for the main condenser air evacuation monitor must be evaluated for two modes of operation. For normal operations the monitor is responding to a low flow rate that is typically released through the plant vent stack. During start-up (hogging mode), the monitor response must be related to a high flow rate that is being released from the turbine building which is considered a ground level release. In both instances, the setpoint can be determined by equating the limiting off-site noble gas dose rate from the release point to the total body or skin dose rates of Part A Control C.7.1.1.a. The most restrictive noble gas mixture has been found to be represented by the noble gases associated with the fuel gap activity at the time of plant shutdown. This mixture is listed on UFSAR Table 15.7-20, and provides a limiting setpoint calculation that bounds other potential or observed offgas mix conditions.

In addition to monitoring the main condenser air, the air evacuation monitor response is also used as an indicator for Turbine Gland Seal Condenser exhaust. Since this is a potential release pathway during both the normal and the hogging modes of operation, the impact is considered in the setpoint calculations.

8.5.1 Limiting Example for the Air Evacuation Monitor Setpoint During Normal Operations

During normal power operation, the maximum allowable setpoint for the air evacuation monitor is determined by applying plant vent setpoint equation 8-13 for the total body, and equation 8-16 for the skin. Therefore, the maximum allowable stack release rate can be calculated as follows:

$$R_{tb(c)} = (588)\,(S_g)\,(1/F)\,(1/DFB_c) \qquad (8\text{-}13)$$

$$(cpm) = (mrem\text{-}\mu Ci\text{-}m^3/yr\text{-}pCi\text{-}sec)\,(cpm\text{-}cm^3/\mu Ci)\,(sec/cm^3)(pCi\text{-}yr/mrem\text{-}m^3)$$

where:

$R_{tb(e)}$ = count rate (cpm) for the plant vent maximum release rate based on the total body dose rate limit of 500-mrem/yr

588 = conversion factor (mrem-μCi-m^3/yr-pCi-sec)

S_g = the detector response efficiency (cpm-cm^3/μCi) as determined from monitor calibration. For the air evacuation monitor, a typical value is 1.87E+08 cpm-cm^3/μCi.

F = release flow rate. During normal operations, a typical flow value ranges from 10 to 50 cfm (2.36E+04 cc/sec maximum) for the air evacuation pathway.

DFB_c = the composite total body dose factor, (mrem-m^3/pCi-yr). For different gas mixes, the composite can be found from:

$$DFB_c = \sum_i \dot{Q}_i\, DFB_i\, 0 \,/\, \sum_i \dot{Q}_i \qquad (5\text{-}7)$$

DFB_c for the limiting gas mixture is 4.86E-03 mrem-m^3/pCi-yr (See Section 5.2.1.2)

Therefore,

$R_{tb(c)}$ = 588 1.87E+08 (1/2.36E+04) (1/4.86E-03)

= 9.59E+08 cpm detector count rate for a maximum release rate at the plant vent based on the total body dose rate.

Next, the off-site skin dose rate limit is evaluated from equation 8-16 in a similar fashion as follows:

$R_{skin(c)} = 3000\ S_g\ (1/F)\ (1/DF'_c)$ (8-16)

(cpm) = (mrem/yr) (cpm-cm^3/Ci) (sec/cm^3) (μCi-yr/mrem-sec)

where:

$R_{skin(c)}$ = count rate (cpm) for a plant vent maximum release rate based on the skin dose rate limit of 3000 mrem/yr

DF'_c = the elevated release skin dose factor for the limiting noble gas mix associated with fuel gap activity at shutdown is calculated in the example provided in Section 5.2.1.2, and is equal to 6.80E-03 (mrem-sec/μCi-yr).

Therefore,

$R_{skin(c)}$ = 3000 1.87E+08 (1/2.36E+04) (1/6.80E-03)

= 3.50E+09 cpm detector count rate for a maximum release rate at the plant vent based on the skin dose rate.

Comparing the release rate limit for the total body to that of the skin (i.e., 9.59E+08 cpm versus 3.50E+09 cpm, respectively) it is determined that the release rate for the total body is limiting in this case.

Since during normal operations the Turbine Gland Seal Condenser exhaust has the potential to be a minor additional contribution to the total site release, the effective contribution from the main condenser exhaust must be limited to some fraction of the calculated value. The contribution from the Turbine Gland Seal Condenser exhaust is expected to be minor because this system handles only 670 lbs/hour of steam which is a very small fraction of the 1.5E+07 lbs/hour of secondary side steam that the main condenser handles. Therefore, the maximum alarm is set at 6.71E+08 cpm, which is 70% of the calculated value, to ensure that the contribution of the two does not exceed the dose rate limit of Part A Control C.7.1.1.a. During normal operations, this would represent the maximum allowable count rate on the air evacuation monitor that would equate to the site boundary total body dose rate limit or less.

8.5.2 Example for the Air Evacuation Monitor Setpoint During Startup (Hogging Mode)

During startup (hogging mode), the determination of the air evacuation setpoint must take into account a larger air flow rate that is also released as a ground level effluent. The flow rate must also include the contribution from the Turbine Gland Seal Condenser exhaust, which is a potential release pathway which the air evacuation monitor response must also take into account. For ground releases, the general equation 8-10 is used to represent the monitor count rate.

$$R = (S_g)\,(1/F)\,\sum_i \dot{Q}_i \qquad (8\text{-}10)$$

$$(\text{cpm}) = (\text{cpm-cm}^3/\mu\text{Ci})\,(\text{sec/cm}^3)\,(\mu\text{Ci/sec})$$

where:

R = detector count rate (cpm)

S_g = the detector efficiency (cpm-cm^3/μCi)

F = release flow rate (cm^3/sec)

$\dot{Q}_i$ = the release rate of noble gas "i" in the mixture, for each noble gas listed in Table B.1-10.

For a ground release, the off-site total body dose rate is based on:

$$\dot{D}_{tb(g)} = 3.4 \sum_i (\dot{Q}_i DFB_i) \qquad (3\text{-}3b)$$

A composite total body dose factor, DFB_c can be defined such that:

$$DFB_c \sum_i \dot{Q}_i = \sum_i (\dot{Q}_i DFB_i) \qquad (8\text{-}11)$$

By substituting 8-11 into 3-3b and rearranging to solve for $\sum_i \dot{Q}_i$ the following equation is obtained:

$$\sum_i \dot{Q}_i = (\dot{D}_{(tb(g)} / 3.4)\ (1/DFB_c)$$

By inserting a limiting value of 500 mrem/yr as $\dot{D}_{tb(g)}$ this simplifies to:

$$\sum_i \dot{Q}_i = 147\ (1/DFB_c)$$

Insertion of this equation into equation 8-10 yields:

$$R_{tb(g)} = 147\ S_{(g)}\ (1/F)(1/DFB_c)$$

$$(cpm) = (mrem\text{-}\mu Ci\text{-}m^3/yr\text{-}pCi\text{-}sec)\ (cpm\text{-}cm^3/\mu Ci)\ (sec/cm^3)\ (pCi\text{-}yr/mrem\text{-}m^3)$$

where:

$R_{tb(g)}$ = count rate (cpm) for the maximum ground release rate based on the total body dose rate limit of 500 mrem/yr.

147 = conversion factor (mrem-μCi-m^3/yr-pCi-sec)

S_g = the detector response efficiency for the air evacuation monitor (a typical value of 1.87E+08 cpm-$cm^3/\mu Ci$ is applied in this example).

F = release flow rate. During the hogging mode of operation, a value of 4.72E+06 cm^3/sec (10,000 cfm) is assumed. This represents the hogging flow that is discharged to the Turbine Building roof via the air evacuation monitor. An additional 1800 cfm is discharged from the Gland Seal Condenser exhaust directly to the Turbine Building roof without passing via the air evacuation monitor. To account for this unmonitored flow, an administrative fraction (f_{gland}) is applied to the setpoint calculation to ensure that the monitor would alarm before the dose rate limit for the combined release would be exceeded. One approach for determining a conservative fraction is to assume that the radioactivity concentration in the gland seal exhaust is equal to the main condenser offgas, even though the steam flow to the gland seal system is a very small fraction of the steam flow to the main condenser. Then the ratio of the Gland Seal Condenser exhaust flow to the total flow of hogging discharge and gland seal condenser provides for the relative flow of both sources. For the stated conditions, the unmonitored flow is about 15 % of the total (as additional conservatism, this could be doubled to 30% for the relative proportion assumed to be contributed by the unmonitored pathway). Therefore, f_{gland} = 1-0.3, or 0.7 as the fraction applied to the air evacuation monitor setpoint. An additional fraction (f_g) is also applied to account for the potential offsite dose rate contribution from this total ground source vs the plant main vent ($f_g \leq 1 - f_v$). The split for this illustration is set at 0.3 for ground sources and 0.7 for the plant vent.

DFBc = Composite total body dose factor which weights the combination of total body dose factors (from ODCM Table B.1-10) of each radionuclide assumed to be in the gas mix in accordance with the fraction that it makes up of the total release. For the limiting noble gas mix associated with fuel gap activity at shutdown (see example calculation provided in Section 5.2.1.2), the value is equal to 4.86E-03 (mrem-m^3/pCi-yr).

In addition, two administrative fractions are applied to the general calculation to account for other release contributions to the site dose that do not go by the air evacuation monitor. The first (f_g) is the fraction of the site boundary total body dose rate limit to be administratively assigned to monitored ground level releases (for this illustration = 0.3) such that the combination of the plant vent fraction (f_v) and ground fraction (f_g) is less than or equal to 1 ($f_g \leq 1 - f_v$). The second release reduction factor (f_{gland}) is administratively assigned to account for potential unmonitored contributions from the Turbine Gland Seal Condenser exhaust (for this illustration = 0.7) which discharges to the Turbine Building roof without going past the air evacuation monitor

Therefore:

$R_{tb(g)}$ = (147) (1.87E+08) (1/4.72E+06) (1/4.86E-03) (0.3) (0.7)

= 2.52E+05 cpm detector count rate for a maximum ground release rate based on the total body dose rate.

Next, the off-site skin dose rate limit for a ground release is evaluated from equation 3-4b in a similar fashion as follows:

$$\dot{D}_{skin(g)} = \sum_i \left(\dot{Q}_i DF_{i(g)}\right) \qquad (3\text{-}4b)$$

A composite skin dose factor, $DF'_{c(g)}$ can be defined such that:

$$DF'_{c(g)} \sum_i \dot{Q}_i = \sum_i \left(\dot{Q}_i DF_{i(g)}\right) \qquad (8\text{-}17)$$

By substituting 8-17 into 3-4b and rearranging to solve for $\sum_i \dot{Q}_i$ the following equation is obtained:

$$\sum_i \dot{Q}_i = \dot{D}_{skin(g)} \left(1/DF'_{c(g)}\right)$$

By inserting a limiting value of 3000 mrem/yr as $\dot{D}_{skin(g)}$ this simplifies to:

$$\sum_i \dot{Q}_i = 3000 \, (1/DF'_{c(g)})$$

Insertion of this equation into equation 8-10 yields:

$$R_{skin(g)} = 3000 \, S_g \, (1/F) \, (1/DF'_{c(g)})$$

(cpm) = (mrem/yr) (cpm-cm^3/μCi) (sec/cm^3) (μCi-yr/mrem-sec)

where:

$R_{skin(g)}$ = Count rate (cpm) for the maximum ground release rate based on the skin dose rate limit of 3000 mrem/yr.

$DF'_{c(g)}$ = The composite ground release skin dose factors which weights the combination of the combined skin dose factors (from ODCM Table B.1-10) of each radionuclide assumed to be in the gas mix in accordance with the fraction that it makes up of the total release. For the limiting noble gas mix associated with fuel gap activity at shutdown (see example calculation provided in Section 5.2.1.2), the value is equal to 6.80E-03 (mrem-sec/μCi-yr).

As with the whole body dose rate above, the same two administrative fractions, f_g and f_{gland} are also applied to the skin dose rate response.

Therefore:

$R_{skin(g)}$ = (3000) (1.87E+08) (1/4.72E+06) (1/6.80E-03) (0.3) (0.7)

= 3.67E+06 cpm detector count rate for a maximum ground release rate based on the skin dose rate.

Comparing the release rate limit for the total body to that of the skin (i.e., 2.52E+05 cpm versus 3.67E+06 cpm, respectively) it is determined that the release rate for the total body is limiting in this case.

APPENDIX A

DOSE CONVERSION FACTORS

APPENDIX A

METHOD I DOSE CONVERSION FACTORS

I. LIQUID PATHWAYS - SEABROOK SITE SPECIFIC DCF'S

The models used to assess doses resulting from effluents into liquids is derived from Appendix A of Reg. Guide 1.109. Since Seabrook is a salt water site, the assumed pathways of exposure taken from Reg Guide 1.109 are Aquatic foods - fish; Aquatic foods -invertebrates; and dose from shoreline deposits (direct dose). No drinking water or irrigation pathways exist because of the salt water environment. In addition, exposures resulting from boating and swimming activities have been included for key radionuclides even though Reg. Guide 1.109 identifies these pathways as not contributing any significant contribution to the total dose, and therefore does not provide dose equations for them. For completeness, the swimming and boating pathways have been included using the dose models from the HERMES code (HEDL-TME-71-168, Dec. 1971) section G, Water Immersion.

The Method I dose conversion factors are derived by calculating the dose impact to individuals via the site specific pathways for a unit activity release (1 curie per nuclide). For each pathway, doses by radionuclide are calculated for each of the 7 organs (including whole body) for each of the four age groups (adult, teen, child, and infant). The Method I dose factor for each nuclide is then selected by taking the highest factor for any organ in any of the age groups for all the exposure pathways combined. The list of dose factors in the ODCM then represents a combination of different limiting organs and age groups which, when used to calculate a dose impact from a mix of radionuclides released in liquid effluents, gives a conservative dose since it combines the exposure to different organs and age groups as if there was a single critical organ-age group.

As an example of how the liquid dose conversion factors are developed, the following calculation for Co-60 is shown. The critical organ/age group is selected based on the full assessment of all organs and age groups.

Factor for fish Ingestion:

The general equation for ingestion doses in RG 1.109 is eq. A-3.

$$1119.7 * \frac{U_{ap} * M_p}{F} * \sum_i Q_i * B_{ip} * D_{aipj} * e^{-\lambda * t_p}$$

The full assessment for the ODCM dose factors indicated that for i = Co-60, the maximum dose (mrem/yr) is to the GI-LLI of an adult as the target organ and age group, therefore:

U_{ap} := 21 kg/yr adult usage factor for fish

M_p	:=	0.1	mixing ratio for near field dilution provided by submerged multiport diffuser.
F	:=	918	cu. ft./sec effluent flow rate for circulating water system
Q_i	:=	1.0	curies/year released of Co-60 assumed
B_{ip}	:=	100	equilibrium bioaccumulation factor for Co-60 in salt water fish, in liters/kg
D_{aipj}	:=	$4.02 * 10^{-5}$	mrem/pCi. adult GI-LLI ingestion dose factor from RG-1.109, table E-11.
λ	:=	$1.501 * 10^{-5}$	decay constant for Co-60 in 1/hrs.
t_p	:=	24	time between release and ingestion, in hrs.
1119.7			is the factor to convert from Ci/yr per ft^3/sec to pCi/liter. Note that RG 1.109 uses 1100 as a rounded approximation.

Therefore the dose from fish to adult GI-LLI is (mrem/yr):

$$1119.7 * \frac{U_{ap} * M_p}{F} * Q_i * B_{ip} * D_{aipj} * e^{-\lambda * t_p} = 0.0103$$

Factor for invertebrate ingestion:

Next, the dose from invertebrates to the adult GI-LLI is given by the same general equation but with the following variables changed:

U_{ap}	:=	5	kg/yr usage factor
B_{ip}	:=	1000	1/kg bioaccumulation factor

all other variables the same as above

therefore the dose from invertebrates is (mrem/yr):

$$1119.7 * \frac{U_{ap} * M_p}{F} * Q_i * B_{ip} * D_{aipj} * e^{-\lambda * t_p} = 0.0245$$

Factor for shoreline direct dose:

The general equation for direct dose from shoreline deposits is taken from equation A-7 in RG-1.109 as (mrem/yr):

$$111970 * \frac{U_{ap} * M_p * W}{F} * \sum_i Q_i * T * D_{aipj} * e^{-\lambda * t_p} * \left[1 - e^{-\lambda * t_b}\right]$$

It is assumed that all internal organ doses also receive exposure from direct external sources, therefore each organ dose due to ingestion must have an external component added. For the above equation, the site specific variables for an adult exposure to a 1 curie per year release of Co-60 are:

U_{ap}	:=	334	hrs/year usage factor used for assumed shoreline activities at Seabrook.
M_p	:=	0.1	mixing ratio for near field dilution provided by the submerged multiport diffuser and assume to be extended to the beach continuously.
W	:=	0.5	shorewidth factor for ocean sites, dimensionless
T	:=	$1.923*10^3$	radioactive half life in days for Co-60
D_{aipj}	:=	$1.70*10^{-8}$	dose factor for Co-60 due to deposits in sediments, units of (mrem/hr)/(pCi/m^2)
t_p	:=	0.0	transit time to point of exposure, hrs
t_b	:=	131400	period that sediment is assumed to be exposed to water contamination for long term buildup, set at 15 years for Method I DCF's
Q_i	:=	1.0	curies per year, Co-60 assumed
111970			conversion factor to convert (Ci/yr)/(ft^3/sec) to pCi/liter and account for the proportionality constant used in sediment model

Therefore the dose to the whole body and each organ due to direct exposure to the shoreline (mrem/yr) is:

$$111970 * \frac{U_{ap} * M_p * W}{F} * Q_i * T * D_{aipj} * e^{-\lambda * t_p} * \left[1 - e^{-\lambda * t_b}\right] = 0.0573$$

Direct dose due to Swimming:

The dose due to immersion in water (swimming) is taken from the HERMES computer code. The original ODCM calculation was based on some preliminary dilution assumptions which gave a near field prompt dilution factor for the multiport diffuser of 8. For single unit operation with both service water and circulating water flow (412,000 gpm), a value of 10 is more realistic. This surface area of the plume is restricted to a small area over the diffuser and does not touch the shoreline approx. 1 mile away. Since the over all impact from swimming is small when compared to the other exposure pathways, the original conservatism on dilution are kept here.

The dose from swimming is given by the following equation:

$$1.0*10^{12}*\frac{U_p}{F_a}*\sum_i Q_i*DF_{im} \qquad \text{(mrem/yr)}$$

Where:

U_p	:=	45	hrs/yr, usage factor for swimming for maximum age group (teen) from HERMES.
F_a	:=	$6.56*10^{11}$	liters/yr, estimated annual dilution effluent flow in multiport diffuser
Q_i	:=	1.0	Curies/yr, assumed release rate of nuclide i.
DF_{im}	:=	$4.6*10^{-6}$	mrem-liters per hrs-pCi, dose factor for Co-60 for water immersion taken from HERMES.
$1.0*10^{12}$			constant for pCi/Ci

Therefore the swimming dose for a 1 curie release of Co-60 is (mrem/yr):

$$1.0*10^{12}*U_p*\frac{M_p}{F_a}*Q_i*DF_{im}=3.155*10^{-5}$$

As can be seen, the contribution of the swimming dose is only about one 30000ths of the total of the RG 1.109 pathways, and can be ignored in the case of Co-60. Similarly, the boating dose as given in HERMES is taken as half of the swimming dose, (and corrected for change in usage assumptions). The resulting dose is found to be less than the swimming dose and can also therefore be discounted in this case.

Total liquid Pathway dose:

The sum of the above liquid pathway doses can now be added to give the total maximum individual dose to the critical organ (adult-GI-LLI) for Co-60. This gives:

$$0.0103 + 0.0245 + 0.0573 = 0.0921 \text{ mrem/yr}$$

Since the internal doses given by the RG-1.109 methods actually are 50 yr dose commitments resulting from one year exposure to the quantity of activity assumed to be released into the water, and the direct dose represents the dose received for the period assumed to be exposed to the pathway, and the activity release was taken as a unit quantity (i.e. Q = 1 Ci), the above total liquid pathway dose can be stated as site specific committed dose factor in mrem/Ci released. For Method I in the ODCM, the critical organ dose factor is seen to be 0.0921 mrem/Ci, as shown above. The value reported on Table B.1-11 (9.22 E-08 mrem/μCi) was generated by a computational routine which gives rise to the round-off difference between it and the above example. The whole body site specific dose factor for the ODCM was calculated in the same way treating the whole body as a separate organ.

II. GASEOUS PATHWAYS - SEABROOK SITE SPECIFIC DCF'S

The models used to assess doses resulting from gaseous effluents in the form of iodines, tritium, and particulates are derived from Appendix C of Reg. Guide 1.109. For Seabrook, it is assumed that at the off site location which exhibits minimum atmospheric dilution for plant releases the following exposure pathways exist: inhalation, ground plane, ingestion of goats milk, meat, stored vegetables, and leafy vegetables.

The Method I dose and dose rate factors are derived by calculating the dose impact to all age group individuals via the site specific pathways for a unit activity release (1 curie per nuclide). For each pathway, doses by nuclide are calculated for each of 7 organs (including the whole body) for each of the 4 age groups. The Method I dose factor for each nuclide is then selected by taking the highest factor for any organ in any of the age groups for all exposure pathways combined. The list of dose factors in the ODCM then represents a combination of different limiting organs and age groups which, when used to calculate the dose impact from a mix of radionuclides released into the atmosphere, gives a conservative dose since it combines the exposure to different organs and age groups as if they were for all the same critical organ-age group.

As an example of how the gaseous particulate dose factors are developed, the following calculation for Mn-54 is shown. The critical organ/age group for Mn-54 was selected based on a full assessment of all organ and age group combinations. For elevated releases from the plant vent stack to the maximum site boundary (max. dose point due to meteorology), the critical organ and age group for Mn-54 was determined to be the GI-LLI for the adult.

PART A: INHALATION DOSE CONTRIBUTION

The general equations for inhalation doses in RG 1.109 are eq. C-3, and C-4 which together give:

$$3.17*10^{4}*R_a*\left[\frac{X}{Q}\right]*\sum_i Q_i*DFA_{ija}=D_{ja}$$

Where for the case of Mn-54 releases, the variables above are defined as:

$3.17*10^4$			is the number of pCi/Ci divided by the number of second per year
R_a	:=	8000	the breathing rate for age group a (adults) in m^3 /yr.
$\frac{X}{Q}$	:=	$7.5 * 10^{-7}$	the long term average depleted atmospheric dispersion factor, in sec/m^3, at the maximum exposure point off site (S.B.)
Q_i	:=	1	the release rate of nuclide i to the atmosphere in Ci/yr

$DFA_{ija} := 9.67*10^{-6}$ the inhalation dose factor for nuclide i (Mn-54), organ j (GI-LLI), and age group a (adult) taken from RG 1.109, table E-7, in mrem/pCi inhaled.

Therefore, the inhalation dose to the maximum potential off site individual is given as:

$$3.17*10^{4}*R_a*\left[\frac{X}{Q}\right]*Q_i*DFA_{ija} = 0.00184 \text{ mrem/yr per Ci}$$

PART B: GROUND PLANE DIRECT DOSE CONTRIBUTION

The general equations for ground plane external direct dose in RG 1.109 are equations C-1 and C-2 which together give the dose DG as:

$$8760*1.0*10^{12}*S_F*\left[\frac{D}{Q}\right]*\sum_i Q_i*\frac{1-e^{-\lambda_i*t_b}}{\lambda_i}*DFG_{ij}$$

Where for the case of Mn-54 releases, the variables in the above equation are defined as:

$1.0*10^{12}$ is the number of pCi per Ci

$S_F := 0.7$ the shielding factor provided by residential structures (dimensionless) for use in calculation accumulated doses over time. Note that for determination of dose rate factors (i.e. instantaneous dose rates) the shielding factor is set equal to 1.0, or in effect no credit for dose reduction is taken for determination of dose rates at points in time.

$\frac{D}{Q} := 1.5*10^{-8}$ the long term average relative deposition factor at the maximum site boundary location, in $1/m^2$

$\lambda_i := 0.8105$ is the radiological decay constant for Mn-54 (nuclide i in this case) in 1/yr.

$t_b := 15$ is the time in years over which accumulation is evaluated (approx. midpoint of plant operating life)

$DFG_{ij} := 5.80*10^{-9}$ external dose factor to the whole body, or any internal organ j, for standing on contaminated ground from Mn-54 (RG 1.109 Table E-6) in mrem/hr per pCi/m^2

$Q_i := 1.0$ is the unit release quantity assumed for each nuclide i, in Ci/yr.

8760 is the number of hours in a year

Therefore, the contribution to the total dose made by exposure to the ground plane at the maximum off site exposure location for Mn-54 is given as:

$$8760 * 1.0 * 10^{12} * S_F * \left[\frac{D}{Q}\right] * Q_i * \frac{1 - e^{-\lambda_i * t_b}}{\lambda_i} * DFG_{ij} = 0.658 \quad \text{mrem per yr per Ci}$$

PART C: INGESTION DOSE CONTRIBUTION:

As an initial step to determining the dose contribution from ingestion of milk, meat, stored vegetables, and leafy vegetables, we must first calculate the radionuclide concentration in forage, produce, and leafy vegetables resulting from atmospheric tranfers of the activity to the surface of the vegetation and onto the soil for root uptake. For all radioiodines and particulate nuclides (except tritium and C-14), the concentration of nuclide i in and on the vegetation at a point of interest can be calculated using R.G. 1.109 equations C-5 and C-6, which combined gives:

$$1.14*10^{8}*\left[\frac{D}{Q}\right]*Q_i*\left[r*\frac{1-e^{-\lambda_{Ei}*t_e}}{Y_v*\lambda_{Ei}}+B_{iv}*\frac{1-e^{-\lambda_i*t_b}}{P*\lambda_i}\right]*e^{-\lambda_i*t_h}$$

PART C.1: Concentration in Produce (stored vegetables)

For the case of Mn-54 released in air emissions to the maximum site boundary, the concentration of Mn in produce grown in the hypothetical garden at that location can be calculated from the above equation where the variables are defined as:

$1.14*10^{8}$			is the number of pCi per Ci divided by the number of hours in a year (8760).
$\frac{D}{Q}=1.5*10^{-8}$			is the relative deposition factor, in $1/m^2$, at the maximum exposure point off site (S. B.)
Q_i	:=	1	the release rate of nuclide i to the atmosphere in Ci/yr
r	:=	0.2	fraction of deposited activity retained on crops, leafy vegetables, or pasture grass (1.0 for iodines)
λ_{Ei}	:=	0.00219	effective removal rate constant for Mn-54 from crops due to decay and weathering, in hr-1
t_b	:=	131400	soil exposure time to deposition, in (equal to 15 yrs, or mid plant life)
Y_v	:=	2.0	agricultural productivity (yield) for produce, in kg/m-2
B_{iv}	:=	$2.9*10^{-2}$	concentration factor for uptake of Mn-54 from soil by edible parts of crops in pCi/kg (wet weight) per pCi/kg dry soil

λ_i	:=	$9.252*10^{-5}$	radioactive decay constant for Mn-54, in hrs-1
P	:=	240	effective surface density of soil, in kg/m^2
t_h	:=	1440	crop holdup time after harvest and before ingestion, in hrs
t_e	:=	1440	crop exposure time to plume, in hrs

Therefore, the concentration of Mn-54 in stored vegetables produced at the location of maximum deposition for a unit activity release is given as:

$$1.14*10^{8}*\left[\frac{D}{Q}\right]*Q_i*\left[r*\frac{1-e^{-\lambda_{Ei}*t_e}}{Y_v*\lambda_{Ei}}+B_{iv}*\frac{1-e^{-\lambda_i*t_b}}{P*\lambda_i}\right]*e^{-\lambda_i*t_h}=67.379 \quad \text{pCi/kg}$$

PART C.2: Leafy Vegetable Concentration

For leafy vegetables, the above equation is repeated with the value for t_h, crop holdup time after harvest is changed from 1440 hrs to 24 hrs, i.e.:

t_h	:=	24	crop holdup time after harvest, in hrs.

Therefore the concentration of Mn-54 in leafy vegetables at the maximum deposition point due to a unit activity release is given as:

$$1.14*10^{8}*\left[\frac{D}{Q}\right]*Q_i*\left[r*\frac{1-e^{-\lambda_{Ei}*t_e}}{Y_v*\lambda_{Ei}}+B_{iv}*\frac{1-e^{-\lambda_i*t_b}}{P*\lambda_i}\right]*e^{-\lambda_i*t_h}=76.811 \quad \text{pCi/kg}$$

PART C.3.a: Animal Feed concentration (pasture): C_p

Next, we can repeat the above calculation to determine the concentration of Mn-54 in pasture grass used as animal feed. This will allow for the determination of dose contribution from milk and meat.

For pasture grass, all the above variables remain the same except for:

Y_v	:=	0.70	for agricultural productivity of pasture grasses, kg/m^2
t_e	:=	720	for grass exposure time to plume, hrs
t_h	:=	0.0	for holdup time after harvest

Using these variables in the above equation gives the concentration in pasture grass as:

$$1.14*10^{8}*\left[\frac{D}{Q}\right]*Q_i*\left[r*\frac{1-e^{-\lambda_{Ei}*t_e}}{Y_v*\lambda_{Ei}}+B_{iv}*\frac{1-e^{-\lambda_i*t_b}}{P*\lambda_i}\right]*e^{-\lambda_i*t_h}=179.227 \quad \text{pCi/kg}$$

PART C.3.b: Animal Feed Concentration (stored feed): C_s

For stored feed that would be given to goats, or meat animals, the average concentration would be calculated by changing the following variables in the above calculation to:

Y_v	:=	2.0	agricultural productivity for stored feed
t_e	:=	1440	feed crop exposure time to plume in hrs
t_h	:=	2160	feed crop holdup time after harvest, hrs

Putting these values back into the above equation gives the concentration in stored animal feed (goat and meat animal) of Mn-54 for a unit activity release to the maximum exposure point.

$$1.14*10^{8}*\left[\frac{D}{Q}\right]*Q_i*\left[r*\frac{1-e^{-\lambda_{Ei}*t_e}}{Y_v*\lambda_{Ei}}+B_{iv}*\frac{1-e^{-\lambda_i*t_b}}{P*\lambda_i}\right]*e^{-\lambda_i*t_h}=63.037 \quad \text{pCi/kg}$$

PART C.3.c.: Concentration in Goat's Milk: C_m

The Mn-54 concentration in milk is dependent on the amount and contamination level of the feed consumed by the animal. The radionuclide concentration in milk is estimated from RG 1.109 general equation C-10 as:

$$F_m*C_v*Q_F*e^{-\lambda_i*t_f} = \text{conc. in milk, pCi/liter}$$

where the variables are defined as:

F_m	:=	$2.5*10^{-4}$	average fraction of animal's daily intake of Mn-54 which appears in each liter of milk, in days/liter
Q_F	:=	6.0	amount of feed consumed by a goat per day, in kg/day (50 kg/d for meat)
t_f	:=	2.0	average transport time of activity from feed into milk and to receptor, in days.

λ_i := $2.22*10^{-3}$ decay constant of Mn-54, in days-1

In addition, the C_v term for the concentration of a nuclide in the animal's feed is given from RG 1.109 general equation C-11 as:

$$C_v = f_p * f_s * C_p + [1 - f_p] * C_s + f_p * [1 - f_s] * C_s$$

where the following equals:

f_p := 0.5 fraction of the year that animals graze on pasture

f_s := 1.0 fraction of daily feed that is pasture grass when the animal grazes on pasture

C_p := 179.227 concentration of Mn-54 in pasture grass as calculated from above, pCi/kg

C_s := 63.037 concentration of Mn-54 in stored feed as calculated from above, in pCi/kg

Therefore, the concentration in the total animal's feed is estimated to be:

$$f_p * f_s * C_p + [1 - f_p] * C_s + f_p * [1 - f_s] * C_s = 121.132 \text{ pCi/kg}$$

When this value of 121.132 is put back into the above general equation for nuclide concentration in milk, we get:

[C_v := 121.132 pCi/kg]

and

$F_m * C_v * Q_F * e^{-\lambda_i * t_f} = 0.181$ pCi/liter of Mn-54 in goats milk

PART C.3.d.: Concentration in Meat: C_f

Similar to milk, the concentration of the nuclide in animal meat is calculated. RG 1.109 general equation C-12 is given as:

$$C_f = F_f * C_v * Q_F * e^{-\lambda_i * t_s}$$

Here the variables are set as:

F_f := $8.0*10^{-4}$ fraction of animals daily intake of Mn-54 which appears in each kg of flesh, in days/kg

Q_F := 50.0 animal's daily feed intake, in kg/day

t_s	:=	20.0	average time from slaughter to consumption, in days
C_v	:=	121.132	concentration on Mn-54 in animal's feed, same as calculated above for goat, in pCi/kg

Therefore, the concentration of Mn-54 in animal meat is calculated to be:

$$F_f * C_v * Q_F * e^{-\lambda_i * t_s} = 4.635 \quad \text{pCi/kg in meat for Mn-54}$$

PART D: DOSE FROM INGESTION OF FOODS PRODUCED AT MAXIMUM LOCATION

Now that we have calculated the concentration of Mn-54 in milk, meat, leafy vegetables, and stored vegetables produced at a location of maximum air deposition, the resulting dose to any organ j and age group a can be calculated from the following general equation C-13 taken from RG 1.109:

$$\sum_i DFI_{ija} * [U_{va} * f_g * C_v + U_{ma} * C_m + U_{Fa} * C_f + U_{La} * f_l * C_L]$$

For Mn-54 set equal to i, we find that from the evaluation of all organs for all age groups for combination of all exposure pathways, the adults GI-LLI is the critical age group/organ. Therefore, the variables in the above dose equation can be defined as:

DFI_{ija}	:=	$1.40*10^{-5}$	ingestion dose factor for adults/GI-LLI for Mn-54, in mrem/pCi ingested (RG 1.109, Table E-11)
U_{va}	:=	520.0	vegetable ingestion rates for adults, kg/yr
f_g	:=	0.76	fraction of stored vegetables grown in the garden
f_l	:=	1.0	of leafy vegetables grown in the garden
U_{ma}	:=	310.0	milk ingestion rate for adults, liter/yr
U_{Fa}	:=	110.0	meat ingestion rate for adults, kg/yr
U_{La}	:=	64.0	leafy vegetable ingestion rate for adults, kg/yr
C_v	:=	67.379	concentration of Mn-54 in stored vegetables, in pCi/kg (from above)
C_m	:=	0.181	concentration of Mn-54 in milk, in pCi/liter (from above)
C_f	:=	4.635	concentration of Mn-54 in meat, in pCi/kg (from above)

C_L := 76.811 concentration of Mn-54 in leafy vegetables, in pCi/kg (from above)

The dose from the combination of ingestion pathways for this example is calculated by substituting the above listed variables back into the ingestion dose equation:

$$DFI_{ija} * [U_{va} * f_g * C_v + U_{ma} * C_m + U_{Fa} * C_f + U_{La} * f_l * C_L] = 0.4495 \quad \text{mrem-/yr per Ci}$$

By breaking the above dose equation down into the different pathways which combine to give the total ingestion dose, we can see the individual dose contribution made by each exposure pathway.

Therefore, we have:

Dose for ingestion of stored vegetables	$DFI_{ija} * U_{va} * f_g * C_v = 0.373$
Dose for ingestion of goat's milk	$DFI_{ija} * U_{ma} * C_m = 7.855 * 10^{-4}$
Dose for ingestion of meat	$DFI_{ija} * U_{Fa} * C_f = 0.00714$
Dose for ingestion of leafy vegetables	$DFI_{ija} * U_{La} * f_l * C_L = 0.0688$

PART E: TOTAL DOSE FROM ALL EXPOSURE PATHWAYS

The total dose from all exposure pathways assumed to be present at the maximum receptor location can be found by simply adding the individual pathway doses calculated above. Since all the calculations above assumed a unit activity release from the plant vent stack, the combined dose can be stated as dose factor per unit activity released. This then demonstrates the development of the Seabrook ODCM Method I dose factors for gaseous release of particulates from the vent stack.

Inhalation dose (Part A)	0.00184 mrem/yr per Ci
Ground plane dose (Part B)	0.658 mrem/yr per Ci
Ingestion dose total (Part D)	0.449 mrem/yr per Ci

Total dose all pathways (critical organ is GI-LLI of an adult for Mn-54)	1.11 mrem/yr per Ci

APPENDIX B

ANNUAL AVERAGE EFFLUENT CONCENTRATION LIMITS

TAKEN FROM

10 CFR 20, APPENDIX B

Atomic No.	Radionuclide	Class	Table 1 Occupational Values			Table 2 Effluent Concentrations		Table 3 Releases to Sewers
			Col. 1 Oral Ingestion ALI (μCi)	Col. 2 Inhalation ALI (μCi)	Col. 3 Inhalation DAC (μCi/ml)	Col. 1 Air (μCi/ml)	Col. 2 Water (μCi/ml)	Monthly Average Concentration (μCi/ml)
1	Hydrogen-3	Water, DAC includes skin absorption	8E+4	8E+4	2E-5	1E-7	1E-3	1E-2
		Gas (HT or T_2)Submersion[1]: Use above values as HT and T_2 oxidize in air and in the body to HTO.						
4	Beryllium-7	W, all compounds except those given for Y	4E+4	2E+4	9E-6	3E-8	6E-4	6E-3
		Y, oxides, halides, and nitrates	-	2E+4	8E-6	3E-8	-	-
4	Beryllium-10	W, see ^{7}Be	1E+3 LLI wall (1E+3)	2E+2 -	6E-8 -	2E-10 -	- 2E-5	- 2E-4
		Y, see ^{7}Be	-	1E+1	6E-9	2E-11	-	-
6	Carbon-11[2]	Monoxide	-	1E+6	5E-4	2E-6	-	-
		Dioxide	-	6E+5	3E-4	9E-7	-	-
		Compounds	4E+5	4E+5	2E-4	6E-7	6E-3	6E-2
6	Carbon-14	Monoxide	-	2E+6	7E-4	2E-6	-	-
		Dioxide	-	2E+5	9E-5	3E-7	-	-
		Compounds	2E+3	2E+3	1E-6	3E-9	3E-5	3E-4
9	Fluorine-18[2]	D, fluorides of H, Li, Na, K, Rb, Cs, and Fr	5E+4 St wall (5E+4)	7E+4 -	3E-5 -	1E-7 -	- 7E-4	- 7E-3
		W, fluorides of Be, Mg, Ca, Sr, Ba, Ra, Al, Ga, In, Tl, As, Sb, Bi, Fe, Ru, Os, Co, Ni, Pd, Pt, Cu, Ag, Au, Zn, Cd, Hg, Sc, Y, Ti, Zr, V, Nb, Ta, Mn, Tc, and Re	-	9E+4	4E-5	1E-7	-	-
		Y, lanthanum fluoride	-	8E+4	3E-5	1E-7	-	-
11	Sodium-22	D, all compounds	4E+2	6E+2	3E-7	9E-10	6E-6	6E-5
11	Sodium-24	D, all compounds	4E+3	5E+3	2E-6	7E-9	5E-5	5E-4
12	Magnesium-28	D, all compounds except those given for W	7E+2	2E+3	7E-7	2E-9	9E-6	9E-5
		W, oxides, hydroxides, carbides, halides, and nitrates	-	1E+3	5E-7	2E-9	-	-
13	Aluminum-26	D, all compounds except those given for W	4E+2	6E+1	3E-8	9E-11	6E-6	6E-5
		W, oxides, hydroxides, carbides, halides, and nitrates	-	9E+1	4E-8	1E-10	-	-
14	Silicon-31	D, all compounds except those given for W and Y	9E+3	3E+4	1E-5	4E-8	1E-4	1E-3
		W, oxides, hydroxides, carbides, and nitrates	-	3E+4	1E-5	5E-8	-	-
		Y, aluminosilicate glass	-	3E+4	1E-5	4E-8	-	-
14	Silicon-32	D, see ^{31}Si	2E+3 LLI wall (3E+3)	2E+2 -	1E-7 -	3E-10 -	- 4E-5	- 4E-4
		W, see ^{31}Si	-	1E+2	5E-8	2E-10	-	-
		Y, see ^{31}Si	-	5E+0	2E-9	7E-12	-	-
15	Phosphorus-32	D, all compounds except phosphates given for W	6E+2	9E+2	4E-7	1E-9	9E-6	9E-5
		W, phosphates of Zn^{2+}, S^{3+}, Hg^{2+}, Fe^{3+}, Bi^{3+}, and lanthanides	-	4E+2	2E-7	5E-10	-	-
15	Phosphorus-33	D, see ^{32}P	6E+3	8E+3	4E-6	1E-8	8E-5	8E-4
		W, see ^{32}P	-	3E+3	1E-6	4E-9	-	-

58 FR 67657

Atomic No.	Radionuclide	Class	Table 1 Occupational Values Col. 1 Oral Ingestion ALI (μCi)	Table 1 Occupational Values Col. 2 Inhalation ALI (μCi)	Table 1 Occupational Values Col. 3 Inhalation DAC (μCi/ml)	Table 2 Effluent Concentrations Col. 1 Air (μCi/ml)	Table 2 Effluent Concentrations Col. 2 Water (μCi/ml)	Table 3 Releases to Sewers Monthly Average Concentration (μCi/ml)
16	Sulfur-35	Vapor	-	1E+4	6E-6	2E-8	-	-
		D, sulfides and sulfates except those given for W	1E+4 LLI wall (8E+3)	2E+4 -	7E-6 -	2E-8 -	- 1E-4	- 1E-3
		W, elemental sulfur, sulfides of Sr, Ba, Ge, Sn, Pb, As, Sb, Bi, Cu, Ag, Au, Zn, Cd, Hg, W, and Mo. Sulfates of Ca, Sr, Ba, Ra, As, Sb, and Bi	6E+3 -	2E+3	9E-7	3E-9	-	-
17	Chlorine-36	D, chlorides of H, Li, Na, K, Rb, Cs, and Fr	2E+3	2E+3	1E-6	3E-9	2E-5	2E-4
		W, chlorides of lanthanides, Be, Mg, Ca, Sr, Ba, Ra, Al, Ga, In, Tl, Ge, Sn, Pb, As, Sb, Bi, Fe, Ru, Os, Co, Rh, Ir, Ni, Pd, Pt, Cu, Ag, Au, Zn, Cd, Hg, Sc, Y, Ti, Zr, Hf, V, Nb, Ta, Cr, Mo, W, Mn, Tc, and Re	-	2E+2	1E-7	3E-10	-	-
17	Chlorine-38[2]	D, see ^{36}Cl	2E+4 St. wall (3E+4)	4E+4 -	2E-5 -	6E-8 -	- 3E-4	- 3E-3
		W, see ^{36}Cl	-	5E+4	2E-5	6E-8	-	-
17	Chlorine-39[2]	D, see ^{36}Cl	2E+4 St. wall (4E+4)	5E+4 -	2E-5 -	7E-8 -	- 5E-4	- 5E-3
		W, see ^{36}Cl	-	6E+4	2E-5	8E-8	-	-
18	Argon-37	Submersion[1]	-	-	1E+0	6E-3	-	-
18	Argon-39	Submersion[1]	-	-	2E-4	8E-7	-	-
18	Argon-41	Submersion[1]	-	-	3E-6	1E-8	-	-
19	Potassium-40	D, all compounds	3E+2	4E+2	2E-7	6E-10	4E-6	4E-5
19	Potassium-42	D, all compounds	5E+3	5E+3	2E-6	7E-9	6E-5	6E-4
19	Potassium-43	D, all compounds	6E+3	9E+3	4E-6	1E-8	9E-5	9E-4
19	Potassium-44[2]	D, all compounds	2E+4 St. wall (4E+4)	7E+4 -	3E-5 -	9E-8 -	- 5E-4	- 5E-3
19	Potassium-45[2]	D, all compounds	3E+4 St. wall (5E+4)	1E+5 -	5E-5 -	2E-7 -	- 7E-4	- 7E-3
20	Calcium-41	W, all compounds	3E+3 Bone surf (4E+3)	4E+3 Bone surf (4E+3)	2E-6 -	- 5E-9	- 6E-5	- 6E-4
20	Calcium-45	W, all compounds	2E+3	8E+2	4E-7	1E-9	2E-5	2E-4
20	Calcium-47	W, all compounds	8E+2	9E+2	4E-7	1E-9	1E-5	1E-4
21	Scandium-43	Y, all compounds	7E+3	2E+4	9E-6	3E-8	1E-4	1E-3
21	Scandium-44m	Y, all compounds	5E+2	7E+2	3E-7	1E-9	7E-6	7E-5
21	Scandium-44	Y, all compounds	4E+3	1E+4	5E-6	2E-8	5E-5	5E-4
21	Scandium-46	Y, all compounds	9E+2	2E+2	1E-7	3E-10	1E-5	1E-4
21	Scandium-47	Y, all compounds	2E+3 LLI wall (3E+3)	3E+3 -	1E-6 -	4E-9 -	- 4E-5	- 4E-4
21	Scandium-48	Y, all compounds	8E+2	1E+3	6E-7	2E-9	1E-5	1E-4
21	Scandium-49[2]	Y, all compounds	2E+4	5E+4	2E-5	8E-8	3E-4	3E-3
22	Titanium-44	D, all compounds except those given for W and Y	3E+2	1E+1	5E-9	2E-11	4E-6	4E-5
		W, oxides, hydroxides, carbides, halides, and nitrates	-	3E+1	1E-8	4E-11	-	-
		Y, $SrTiO_3$	-	6E+0	2E-9	8E-12	-	-

58 FR 67657

Atomic No.	Radionuclide	Class	Table 1 Occupational Values: Col. 1 Oral Ingestion ALI (μCi)	Table 1 Occupational Values: Col. 2 Inhalation ALI (μCi)	Table 1 Occupational Values: Col. 3 Inhalation DAC (μCi/ml)	Table 2 Effluent Concentrations: Col. 1 Air (μCi/ml)	Table 2 Effluent Concentrations: Col. 2 Water (μCi/ml)	Table 3 Releases to Sewers: Monthly Average Concentration (μCi/ml)
22	Titanium-45	D, see ^{44}Ti	9E+3	3E+4	1E-5	3E-8	1E-4	1E-3
		W, see ^{44}Ti	-	4E+4	1E-5	5E-8	-	-
		Y, see ^{44}Ti	-	3E+4	1E-5	4E-8	-	-
23	Vanadium-47[2]	D, all compounds except those given for W	3E+4	8E+4	3E-5	1E-7	-	-
			St. wall (3E+4)	-	-	-	4E-4	4E-3
		W, oxides, hydroxides, carbides, and halides	-	1E+5	4E-5	1E-7	-	-
23	Vanadium-48	D, see ^{47}V	6E+2	1E+3	5E-7	2E-9	9E-6	9E-5
		W, see ^{47}V	-	6E+2	3E-7	9E-10	-	-
23	Vanadium-49	D, see ^{47}V	7E+4	3E+4	1E-5	-	-	-
			LLI wall (9E+4)	Bone surf (3E+4)	-	5E-8	1E-3	1E-2
		W, see ^{47}V	-	2E+4	8E-6	2E-8	-	-
24	Chromium-48	D, all compounds except those given for W and Y	6E+3	1E+4	5E-6	2E-8	8E-5	8E-4
		W, halides and nitrates	-	7E+3	3E-6	1E-8	-	-
		Y, oxides and hydroxides	-	7E+3	3E-6	1E-8	-	-
24	Chromium-49[2]	D, see ^{48}Cr	3E+4	8E+4	4E-5	1E-7	4E-4	4E-3
		W, see ^{48}Cr	-	1E+5	4E-5	1E-7	-	-
		Y, see ^{48}Cr	-	9E+4	4E-5	1E-7	-	-
24	Chromium-51	D, see ^{48}Cr	4E+4	5E+4	2E-5	6E-8	5E-4	5E-3
		W, see ^{48}Cr	-	2E+4	1E-5	3E-8	-	-
		Y, see ^{48}Cr	-	2E+4	8E-6	3E-8	-	-
25	Manganese-51[2]	D, all compounds except those given for W	2E+4	5E+4	2E-5	7E-8	3E-4	3E-3
		W, oxides, hydroxides, halides, and nitrates	-	6E+4	3E-5	8E-8	-	-
25	Manganese-52m[2]	D, see ^{51}Mn	3E+4	9E+4	4E-5	1E-7	-	-
			St. wall (4E+4)	-	-	-	5E-4	5E-3
		W, see ^{51}Mn	-	1E+5	4E-5	1E-7	-	-
25	Manganese-52	D, see ^{51}Mn	7E+2	1E+3	5E-7	2E-9	1E-5	1E-4
		W, see ^{51}Mn	-	9E+2	4E-7	1E-9	-	-
25	Manganese-53	D, see ^{51}Mn	5E+4	1E+4	5E-6	-	7E-4	7E-3
			-	Bone surf (2E+4)	-	3E-8	-	-
		W, see ^{51}Mn	-	1E+4	5E-6	2E-8	-	-
25	Manganese-54	D, see ^{51}Mn	2E+3	9E+2	4E-7	1E-9	3E-5	3E-4
		W, see ^{51}Mn	-	8E+2	3E-7	1E-9	-	-
25	Manganese-56	D, see ^{51}Mn	5E+3	2E+4	6E-6	2E-8	7E-5	7E-4
		W, see ^{51}Mn	-	2E+4	9E-6	3E-8	-	-

Atomic No.	Radionuclide	Class	Table 1 Occupational Values: Col. 1 Oral Ingestion ALI (μCi)	Table 1 Occupational Values: Col. 2 Inhalation ALI (μCi)	Table 1 Occupational Values: Col. 3 Inhalation DAC (μCi/ml)	Table 2 Effluent Concentrations: Col. 1 Air (μCi/ml)	Table 2 Effluent Concentrations: Col. 2 Water (μCi/ml)	Table 3 Releases to Sewers: Monthly Average Concentration (μCi/ml)
26	Iron-52	D, all compounds except those given for W	9E+2	3E+3	1E-6	4E-9	1E-5	1E-4
		W, oxides, hydroxides, and halides	-	2E+3	1E-6	3E-9	-	-
26	Iron-55	D, see ^{52}Fe	9E+3	2E+3	8E-7	3E-9	1E-4	1E-3
		W, see ^{52}Fe	-	4E+3	2E-6	6E-9	-	-
26	Iron-59	D, see ^{52}Fe	8E+2	3E+2	1E-7	5E-10	1E-5	1E-4
		W, see ^{52}Fe	-	5E+2	2E-7	7E-10	-	-
26	Iron-60	D, see ^{52}Fe	3E+1	6E+0	3E-9	9E-12	4E-7	4E-6
		W, see ^{52}Fe	-	2E+1	8E-9	3E-11	-	-
27	Cobalt-55	W, all compounds except those given for Y	1E+3	3E+3	1E-6	4E-9	2E-5	2E-4
		Y, oxides, hydroxides, halides, and nitrates	-	3E+3	1E-6	4E-9	-	-
27	Cobalt-56	W, see ^{55}Co	5E+2	3E+2	1E-7	4E-10	6E-6	6E-5
		Y, see ^{55}Co	4E+2	2E+2	8E-8	3E-10	-	-
27	Cobalt-57	W, see ^{55}Co	8E+3	3E+3	1E-6	4E-9	6E-5	6E-4
		Y, see ^{55}Co	4E+3	7E+2	3E-7	9E-10	-	-
27	Cobalt-58m	W, see ^{55}Co	6E+4	9E+4	4E-5	1E-7	8E-4	8E-3
		Y, see ^{55}Co	-	6E+4	3E-5	9E-8	-	-
27	Cobalt-58	W, see ^{55}Co	2E+3	1E+3	5E-7	2E-9	2E-5	2E-4
		Y, see ^{55}Co	1E+3	7E+2	3E-7	1E-9	-	-
27	Cobalt-60m[2]	W, see ^{55}Co	1E+6 St. wall (1E+6)	4E+6 -	2E-3 -	6E-6 -	- 2E-2	- 2E-1
		Y, see ^{55}Co	-	3E+6	1E-3	4E-6	-	-
27	Cobalt-60	W, see ^{55}Co	5E+2	2E+2	7E-8	2E-10	3E-6	3E-5
		Y, see ^{55}Co	2E+2	3E+1	1E-8	5E-11	-	-
27	Cobalt-61[2]	W, see ^{55}Co	2E+4	6E+4	3E-5	9E-8	3E-4	3E-3
		Y, see ^{55}Co	2E+4	6E+4	2E-5	8E-8	-	-
27	Cobalt-62m[2]	W, see ^{55}Co	4E+4 St. wall (5E+4)	2E+5 -	7E-5 -	2E-7 -	- 7E-4	- 7E-3
		Y, see ^{55}Co	-	2E+5	6E-5	2E-7	-	-
28	Nickel-56	D, all compounds except those given for W	1E+3	2E+3	8E-7	3E-9	2E-5	2E-4
		W, oxides, hydroxides, and carbides	-	1E+3	5E-7	2E-9	-	-
		Vapor	-	1E+3	5E-7	2E-9	-	-
28	Nickel-57	D, see ^{56}Ni	2E+3	5E+3	2E-6	7E-9	2E-5	2E-4
		W, see ^{56}Ni	-	3E+3	1E-6	4E-9	-	-
		Vapor	-	6E+3	3E-6	9E-9	-	-

58 FR 67657

Atomic No.	Radionuclide	Class	Table 1 Occupational Values Col. 1 Oral Ingestion ALI (μCi)	Table 1 Occupational Values Col. 2 Inhalation ALI (μCi)	Table 1 Occupational Values Col. 3 Inhalation DAC (μCi/ml)	Table 2 Effluent Concentrations Col. 1 Air (μCi/ml)	Table 2 Effluent Concentrations Col. 2 Water (μCi/ml)	Table 3 Releases to Sewers Monthly Average Concentration (μCi/ml)
28	Nickel-59	D, see ^{56}Ni	2E+4	4E+3	2E-6	5E-9	3E-4	3E-3
		W, see ^{56}Ni	-	7E+3	3E-6	1E-8	-	-
		Vapor	-	2E+3	8E-7	3E-9	-	-
28	Nickel-63	D, see ^{56}Ni	9E+3	2E+3	7E-7	2E-9	1E-4	1E-3
		W, see ^{56}Ni	-	3E+3	1E-6	4E-9	-	-
		Vapor	-	8E+2	3E-7	1E-9	-	-
28	Nickel-65	D, see ^{56}Ni	8E+3	2E+4	1E-5	3E-8	1E-4	1E-3
		W, see ^{56}Ni	-	3E+4	1E-5	4E-8	-	-
		Vapor	-	2E+4	7E-6	2E-8	-	-
28	Nickel-66	D, see ^{56}Ni	4E+2	2E+3	7E-7	2E-9	-	-
			LLI wall (5E+2)	-	-	-	6E-6	6E-5
		W, see ^{56}Ni	-	6E+2	3E-7	9E-10	-	-
		Vapor	-	3E+3	1E-6	4E-9	-	-
29	Copper-60[2]	D, all compounds except those given for W and Y	3E+4	9E+4	4E-5	1E-7	-	-
			St. wall (3E+4)	-	-	-	4E-4	4E-3
		W, sulfides, halides, and nitrates	-	1E+5	5E-5	2E-7	-	-
		Y, oxides and hydroxides	-	1E+5	4E-5	1E-7	-	-
29	Copper-61	D, see ^{60}Cu	1E+4	3E+4	1E-5	4E-8	2E-4	2E-3
		W, see ^{60}Cu	-	4E+4	2E-5	6E-8	-	-
		Y, see ^{60}Cu	-	4E+4	1E-5	5E-8	-	-
29	Copper-64	D, see ^{60}Cu	1E+4	3E+4	1E-5	4E-8	2E-4	2E-3
		W, see ^{60}Cu	-	2E+4	1E-5	3E-8	-	-
		Y, see ^{60}Cu	-	2E+4	9E-6	3E-8	-	-
29	Copper-67	D, see ^{60}Cu	5E+3	8E+3	3E-6	1E-8	6E-5	6E-4
		W, see ^{60}Cu	-	5E+3	2E-6	7E-9	-	-
		Y, see ^{60}Cu	-	5E+3	2E-6	6E-9	-	-
30	Zinc-62	Y, all compounds	1E+3	3E+3	1E-6	4E-9	2E-5	2E-4
30	Zinc-63[2]	Y, all compounds	2E+4	7E+4	3E-5	9E-8	-	-
			St. wall (3E+4)	-	-	-	3E-4	3E-3
30	Zinc-65	Y, all compounds	4E+2	3E+2	1E-7	4E-10	5E-6	5E-5
30	Zinc-69m	Y, all compounds	4E+3	7E+3	3E-6	1E-8	6E-5	6E-4
30	Zinc-69[2]	Y, all compounds	6E+4	1E+5	6E-5	2E-7	8E-4	8E-3
30	Zinc-71m	Y, all compounds	6E+3	2E+4	7E-6	2E-8	8E-5	8E-4
30	Zinc-72	Y, all compounds	1E+3	1E+3	5E-7	2E-9	1E-5	1E-4
31	Gallium-65[2]	D, all compounds except those given for W	5E+4	2E+5	7E-5	2E-7	-	-
			St. wall (6E+4)	-	-	-	9E-4	9E-3
		W, oxides, hydroxides, carbides, halides, and nitrates	-	2E+5	8E-5	3E-7	-	-

58 FR 67657

58 FR 67657

Atomic No.	Radionuclide	Class	Table 1 Occupational Values: Col. 1 Oral Ingestion ALI (μCi)	Table 1 Occupational Values: Col. 2 Inhalation ALI (μCi)	Table 1 Occupational Values: Col. 3 Inhalation DAC (μCi/ml)	Table 2 Effluent Concentrations: Col. 1 Air (μCi/ml)	Table 2 Effluent Concentrations: Col. 2 Water (μCi/ml)	Table 3 Releases to Sewers: Monthly Average Concentration (μCi/ml)
31	Gallium-66	D, see ^{65}Ga	1E+3	4E+3	1E-6	5E-9	1E-5	1E-4
		W, see ^{65}Ga	-	3E+3	1E-6	4E-9	-	-
31	Gallium-67	D, see ^{65}Ga	7E+3	1E+4	6E-6	2E-8	1E-4	1E-3
		W, see ^{65}Ga	-	1E+4	4E-6	1E-8	-	-
31	Gallium-68[2]	D, see ^{65}Ga	2E+4	4E+4	2E-5	6E-8	2E-4	2E-3
		W, see ^{65}Ga	-	5E+4	2E-5	7E-8	-	-
31	Gallium-70[2]	D, see ^{65}Ga	5E+4	2E+5	7E-5	2E-7	-	-
			St. wall (7E+4)	-	-	-	1E-3	1E-2
		W, see ^{65}Ga	-	2E+5	8E-5	3E-7	-	-
31	Gallium-72	D, see ^{65}Ga	1E+3	4E+3	1E-6	5E-9	2E-5	2E-4
		W, see ^{65}Ga	-	3E+3	1E-6	4E-9	-	-
31	Gallium-73	D, see ^{65}Ga	5E+3	2E+4	6E-6	2E-8	7E-5	7E-4
		W, see ^{65}Ga	-	2E+4	6E-6	2E-8	-	-
32	Germanium-66	D, all compounds except those given for W	2E+4	3E+4	1E-5	4E-8	3E-4	3E-3
		W, oxides, sulfides, and halides	-	2E+4	8E-6	3E-8	-	-
32	Germanium-67[2]	D, see ^{66}Ge	3E+4	9E+4	4E-5	1E-7	-	-
			St. wall (4E+4)	-	-	-	6E-4	6E-3
		W, see ^{66}Ge	-	1E+5	4E-5	1E-7	-	-
32	Germanium-68	D, see ^{66}Ge	5E+3	4E+3	2E-6	5E-9	6E-5	6E-4
		W, see ^{66}Ge	-	1E+2	4E-8	1E-10	-	-
32	Germanium-69	D, see ^{66}Ge	1E+4	2E+4	6E-6	2E-8	2E-4	2E-3
		W, see ^{66}Ge	-	8E+3	3E-6	1E-8	-	-
32	Germanium-71	D, see ^{66}Ge	5E+5	4E+5	2E-4	6E-7	7E-3	7E-2
		W, see ^{66}Ge	-	4E+4	2E-5	6E-8	-	-
32	Germanium-75[2]	D, see ^{66}Ge	4E+4	8E+4	3E-5	1E-7	-	-
			St. wall (7E+4)	-	-	-	9E-4	9E-3
		W, see ^{66}Ge	-	8E+4	4E-5	1E-7	-	-
32	Germanium-77	D, see ^{66}Ge	9E+3	1E+4	4E-6	1E-8	1E-4	1E-3
		W, see ^{66}Ge	-	6E+3	2E-6	8E-9	-	-
32	Germanium-78[2]	D, see ^{66}Ge	2E+4	2E+4	9E-6	3E-8	-	-
			St. wall (2E+4)	-	-	-	3E-4	3E-3
		W, see ^{66}Ge	-	2E+4	9E-6	3E-8	-	-

Atomic No.	Radionuclide	Class	Table 1 Occupational Values Col. 1 Oral Ingestion ALI (μCi)	Col. 2 Inhalation ALI (μCi)	Col. 3 Inhalation DAC (μCi/ml)	Table 2 Effluent Concentrations Col. 1 Air (μCi/ml)	Col. 2 Water (μCi/ml)	Table 3 Releases to Sewers Monthly Average Concentration (μCi/ml)
33	Arsenic-69[2]	W, all compounds	3E+4 St. wall (4E+4)	1E+5 -	5E-5 -	2E-7 -	- 6E-4	- 6E-3
33	Arsenic-70[2]	W, all compounds	1E+4	5E+4	2E-5	7E-8	2E-4	2E-3
33	Arsenic-71	W, all compounds	4E+3	5E+3	2E-6	6E-9	5E-5	5E-4
33	Arsenic-72	W, all compounds	9E+2	1E+3	6E-7	2E-9	1E-5	1E-4
33	Arsenic-73	W, all compounds	8E+3	2E+3	7E-7	2E-9	1E-4	1E-3
33	Arsenic-74	W, all compounds	1E+3	8E+2	3E-7	1E-9	2E-5	2E-4
33	Arsenic-76	W, all compounds	1E+3	1E+3	6E-7	2E-9	1E-5	1E-4
33	Arsenic-77	W, all compounds	4E+3 LLI wall (5E+3)	5E+3 -	2E-6 -	7E-9 -	- 6E-5	- 6E-4
33	Arsenic-78[2]	W, all compounds	8E+3	2E+4	9E-6	3E-8	1E-4	1E-3
34	Selenium-70[2]	D, all compounds except those given for W	2E+4	4E+4	2E-5	5E-8	1E-4	1E-3
		W, oxides, hydroxides, carbides, and elemental Se	1E+4	4E+4	2E-5	6E-8	-	-
34	Selenium-73m[2]	D, see ^{70}Se W, see ^{70}Se	6E+4 3E+4	2E+5 1E+5	6E-5 6E-5	2E-7 2E-7	4E-4 -	4E-3 -
34	Selenium-73	D, see ^{70}Se W, see ^{70}Se	3E+3 -	1E+4 2E+4	5E-6 7E-6	2E-8 2E-8	4E-5 -	4E-4 -
34	Selenium-75	D, see ^{70}Se W, see ^{70}Se	5E+2 -	7E+2 6E+2	3E-7 3E-7	1E-9 8E-10	7E-6 -	7E-5 -
34	Selenium-79	D, see ^{70}Se W, see ^{70}Se	6E+2 -	8E+2 6E+2	3E-7 2E-7	1E-9 8E-10	8E-6 -	8E-5 -
34	Selenium-81m[2]	D, see ^{70}Se W, see ^{70}Se	4E+4 2E+4	7E+4 7E+4	3E-5 3E-5	9E-8 1E-7	3E-4 -	3E-3 -
34	Selenium-81[2]	D, see ^{70}Se	6E+4 St. wall (8E+4)	2E+5 -	9E-5 -	3E-7 -	- 1E-3	- 1E-2
		W, see ^{70}Se	-	2E+5	1E-4	3E-7	-	-
34	Selenium-83[2]	D, see ^{70}Se W, see ^{70}Se	4E+4 3E+4	1E+5 1E+5	5E-5 5E-5	2E-7 2E-7	4E-4 -	4E-3 -

58 FR 67657

Atomic No.	Radionuclide	Class	Table 1 Occupational Values			Table 2 Effluent Concentrations		Table 3 Releases to Sewers
			Col. 1	Col. 2	Col. 3	Col. 1	Col. 2	
			Oral Ingestion	Inhalation				
			ALI (μCi)	ALI (μCi)	DAC (μCi/ml)	Air (μCi/ml)	Water (μCi/ml)	Monthly Average Concentration (μCi/ml)
35	Bromine-74m[2]	D, bromides of H, Li, Na, K, Rb, Cs, and Fr	1E+4	4E+4	2E-5	5E-8	-	-
			St. wall (2E+4)	-	-	-	3E-4	3E-3
		W, bromides of lanthanides, Be, Mg, Ca, Sr, Ba, Ra, Al, Ga, In, Tl, Ge, Sn, Pb, As, Sb, Bi, Fe, Ru, Os, Co, Rh, Ir, Ni, Pd, Pt, Cu, Ag, Au, Zn, Cd, Hg, Sc, Y, Ti, Zr, Hf, V, Nb, Ta, Mn, Tc, and Re	-	4E+4	2E-5	6E-8	-	-
35	Bromine-74[2]	D, see ^{74m}Br	2E+4	7E+4	3E-5	1E-7	-	-
			St. wall (4E+4)	-	-	-	5E-4	5E-3
		W, see ^{74m}Br	-	8E+4	4E-5	1E-7	-	-
35	Bromine-75[2]	D, see ^{74m}Br	3E+4	5E+4	2E-5	7E-8	-	-
			St. wall (4E+4)	-	-	-	5E-4	5E-3
		W, see ^{74m}Br	-	5E+4	2E-5	7E-8	-	-
35	Bromine-76	D, see ^{74m}Br	4E+3	5E+3	2E-6	7E-9	5E-5	5E-4
		W, see ^{74m}Br	-	4E+3	2E-6	6E-9	-	-
35	Bromine-77	D, see ^{74m}Br	2E+4	2E+4	1E-5	3E-8	2E-4	2E-3
		W, see ^{74m}Br	-	2E+4	8E-6	3E-8	-	-
35	Bromine-80m	D, see ^{74m}Br	2E+4	2E+4	7E-6	2E-8	3E-4	3E-3
		W, see ^{74m}Br	-	1E+4	6E-6	2E-8	-	-
35	Bromine-80[2]	D, see ^{74m}Br	5E+4	2E+5	8E-5	3E-7	-	-
			St. wall (9E+4)	-	-	-	1E-3	1E-2
		W, see ^{74m}Br	-	2E+5	9E-5	3E-7	-	-
35	Bromine-82	D, see ^{74m}Br	3E+3	4E+3	2E-6	6E-9	4E-5	4E-4
		W, see ^{74m}Br	-	4E+3	2E-6	5E-9	-	-
35	Bromine-83	D, see ^{74m}Br	5E+4	6E+4	3E-5	9E-8	-	-
			St. wall (7E+4)	-	-	-	9E-4	9E-3
		W, see ^{74m}Br	-	6E+4	3E-5	9E-8	-	-
35	Bromine-84[2]	D, see ^{74m}Br	2E+4	6E+4	2E-5	8E-8	-	-
			St. wall (3E+4)	-	-	-	4E-4	4E-3
		W, see ^{74m}Br	-	6E+4	3E-5	9E-8	-	-
36	Krypton-74[2]	Submersion[1]	-	-	3E-6	1E-8	-	-
36	Krypton-76	Submersion[1]	-	-	9E-6	4E-8	-	-
36	Krypton-77[2]	Submersion[1]	-	-	4E-6	2E-8	-	-
36	Krypton-79	Submersion[1]	-	-	2E-5	7E-8	-	-
36	Krypton-81	Submersion[1]	-	-	7E-4	3E-6	-	-

58 FR 67657

Atomic No.	Radionuclide	Class	Table 1 Occupational Values Col. 1 Oral Ingestion ALI (μCi)	Table 1 Occupational Values Col. 2 Inhalation ALI (μCi)	Table 1 Occupational Values Col. 3 Inhalation DAC (μCi/ml)	Table 2 Effluent Concentrations Col. 1 Air (μCi/ml)	Table 2 Effluent Concentrations Col. 2 Water (μCi/ml)	Table 3 Releases to Sewers Monthly Average Concentration (μCi/ml)
36	Krypton-83m[2]	Submersion[1]	-	-	1E-2	5E-5	-	-
36	Krypton-85m	Submersion[1]	-	-	2E-5	1E-7	-	-
36	Krypton-85	Submersion[1]	-	-	1E-4	7E-7	-	-
36	Krypton-87[2]	Submersion[1]	-	-	5E-6	2E-8	-	-
36	Krypton-88	Submersion[1]	-	-	2E-6	9E-9	-	-
37	Rubidium-79[2]	D, all compounds	4E+4	1E+5	5E-5	2E-7	-	-
			St. wall (6E+4)	-	-	-	8E-4	8E-3
37	Rubidium-81m[2]	D, all compounds	2E+5	3E+5	1E-4	5E-7	-	-
			St. wall (3E+5)	-	-	-	4E-3	4E-2
37	Rubidium-81	D, all compounds	4E+4	5E+4	2E-5	7E-8	5E-4	5E-3
37	Rubidium-82m	D, all compounds	1E+4	2E+4	7E-6	2E-8	2E-4	2E-3
37	Rubidium-83	D, all compounds	6E+2	1E+3	4E-7	1E-9	9E-6	9E-5
37	Rubidium-84	D, all compounds	5E+2	8E+2	3E-7	1E-9	7E-6	7E-5
37	Rubidium-86	D, all compounds	5E+2	8E+2	3E-7	1E-9	7E-6	7E-5
37	Rubidium-87	D, all compounds	1E+3	2E+3	6E-7	2E-9	1E-5	1E-4
37	Rubidium-88[2]	D, all compounds	2E+4	6E+4	3E-5	9E-8	-	-
			St. wall (3E+4)	-	-	-	4E-4	4E-3
37	Rubidium-89[2]	D, all compounds	4E+4	1E+5	6E-5	2E-7	-	-
			St. wall (6E+4)	-	-	-	9E-4	9E-3
38	Strontium-80[2]	D, all soluble compounds except $SrTiO_3$	4E+3	1E+4	5E-6	2E-8	6E-5	6E-4
		Y, all insoluble compounds and $SrTiO_3$	-	1E+4	5E-6	2E-8	-	-
38	Strontium-81[2]	D, see ^{80}Sr	3E+4	8E+4	3E-5	1E-7	3E-4	3E-3
		Y, see ^{80}Sr	2E+4	8E+4	3E-5	1E-7	-	-
38	Strontium-82	D, see ^{80}Sr	3E+2	4E+2	2E-7	6E-10	-	-
			LLI wall (2E+2)	-	-	-	3E-6	3E-5
		Y, see ^{80}Sr	2E+2	9E+1	4E-8	1E-10	-	-
38	Strontium-83	D, see ^{80}Sr	3E+3	7E+3	3E-6	1E-8	3E-5	3E-4
		Y, see ^{80}Sr	2E+3	4E+3	1E-6	5E-9	-	-
38	Strontium-85m[2]	D, see ^{80}Sr	2E+5	6E+5	3E-4	9E-7	3E-3	3E-2
		Y, see ^{80}Sr	-	8E+5	4E-4	1E-6	-	-
38	Strontium-85	D, see ^{80}Sr	3E+3	3E+3	1E-6	4E-9	4E-5	4E-4
		Y, see ^{80}Sr	-	2E+3	6E-7	2E-9	-	-
38	Strontium-87m	D, see ^{80}Sr	5E+4	1E+5	5E-5	2E-7	6E-4	6E-3
		Y, see ^{80}Sr	4E+4	2E+5	6E-5	2E-7	-	-

58 FR 67657

Atomic No.	Radionuclide	Class	Table 1 Occupational Values Col. 1 Oral Ingestion ALI (μCi)	Table 1 Occupational Values Col. 2 Inhalation ALI (μCi)	Table 1 Occupational Values Col. 3 Inhalation DAC (μCi/ml)	Table 2 Effluent Concentrations Col. 1 Air (μCi/ml)	Table 2 Effluent Concentrations Col. 2 Water (μCi/ml)	Table 3 Releases to Sewers Monthly Average Concentration (μCi/ml)
38	Strontium-89	D, see ^{80}Sr	6E+2	8E+2	4E-7	1E-9	-	-
			LLI wall (6E+2)	-	-	-	8E-6	8E-5
		Y, see ^{80}Sr	5E+2	1E+2	6E-8	2E-10	-	-
38	Strontium-90	D, see ^{80}Sr	3E+1	2E+1	8E-9	-	-	-
			Bone surf (4E+1)	Bone surf (2E+1)	-	3E-11	5E-7	5E-6
		Y, see ^{80}Sr	-	4E+0	2E-9	6E-12	-	-
38	Strontium-91	D, see ^{80}Sr	2E+3	6E+3	2E-6	8E-9	2E-5	2E-4
		Y, see ^{80}Sr	-	4E+3	1E-6	5E-9	-	-
38	Strontium-92	D, see ^{80}Sr	3E+3	9E+3	4E-6	1E-8	4E-5	4E-4
		Y, see ^{80}Sr	-	7E+3	3E-6	9E-9	-	-
39	Yttrium-86m[2]	W, all compounds except those given for Y	2E+4	6E+4	2E-5	8E-8	3E-4	3E-3
		Y, oxides and hydroxides	-	5E+4	2E-5	8E-8	-	-
39	Yttrium-86	W, see ^{86m}Y	1E+3	3E+3	1E-6	5E-9	2E-5	2E-4
		Y, see ^{86m}Y	-	3E+3	1E-6	5E-9	-	-
39	Yttrium-87	W, see ^{86m}Y	2E+3	3E+3	1E-6	5E-9	3E-5	3E-4
		Y, see ^{86m}Y	-	3E+3	1E-6	5E-9	-	-
39	Yttrium-88	W, see ^{86m}Y	1E+3	3E+2	1E-7	3E-10	1E-5	1E-4
		Y, see ^{86m}Y	-	2E+2	1E-7	3E-10	-	-
39	Yttrium-90m	W, see ^{86m}Y	8E+3	1E+4	5E-6	2E-8	1E-4	1E-3
		Y, see ^{86m}Y	-	1E+4	5E-6	2E-8	-	-
39	Yttrium-90	W, see ^{86m}Y	4E+2	7E+2	3E-7	9E-10	-	-
			LLI wall (5E+2)	-	-	-	7E-6	7E-5
		Y, see ^{86m}Y	-	6E+2	3E-7	9E-10	-	-
39	Yttrium-91m[2]	W, see ^{86m}Y	1E+5	2E+5	1E-4	3E-7	2E-3	2E-2
		Y, see ^{86m}Y	-	2E+5	7E-5	2E-7	-	-
39	Yttrium-91	W, see ^{86m}Y	5E+2	2E+2	7E-8	2E-10	-	-
			LLI wall (6E+2)	-	-	-	8E-6	8E-5
		Y, see ^{86m}Y	-	1E+2	5E-8	2E-10	-	-
39	Yttrium-92	W, see ^{86m}Y	3E+3	9E+3	4E-6	1E-8	4E-5	4E-4
		Y, see ^{86m}Y	-	8E+3	3E-6	1E-8	-	-
39	Yttrium-93	W, see ^{86m}Y	1E+3	3E+3	1E-6	4E-9	2E-5	2E-4
		Y, see ^{86m}Y	-	2E+3	1E-6	3E-9	-	-
39	Yttrium-94[2]	W, see ^{86m}Y	2E+4	8E+4	3E-5	1E-7	-	-
			St. wall (3E+4)	-	-	-	4E-4	4E-3
		Y, see ^{86m}Y	-	8E+4	3E-5	1E-7	-	-
39	Yttrium-95[2]	W, see ^{86m}Y	4E+4	2E+5	6E-5	2E-7	-	-
			St. wall (5E+4)	-	-	-	7E-4	7E-3
		Y, see ^{86m}Y	-	1E+5	6E-5	2E-7	-	-

58 FR 67657

Atomic No.	Radionuclide	Class	Table 1 Occupational Values: Col. 1 Oral Ingestion ALI (μCi)	Table 1 Occupational Values: Col. 2 Inhalation ALI (μCi)	Table 1 Occupational Values: Col. 3 Inhalation DAC (μCi/ml)	Table 2 Effluent Concentrations: Col. 1 Air (μCi/ml)	Table 2 Effluent Concentrations: Col. 2 Water (μCi/ml)	Table 3 Releases to Sewers: Monthly Average Concentration (μCi/ml)
40	Zirconium-86	D, all compounds except those given for W and Y	1E+3	4E+3	2E-6	6E-9	2E-5	2E-4
		W, oxides, hydroxides; halides, and nitrates	-	3E+3	1E-6	4E-9	-	-
		Y, carbide	-	2E+3	1E-6	3E-9	-	-
40	Zirconium-88	D, see ^{86}Zr	4E+3	2E+2	9E-8	3E-10	5E-5	5E-4
		W, see ^{86}Zr	-	5E+2	2E-7	7E-10	-	-
		Y, see ^{86}Zr	-	3E+2	1E-7	4E-10	-	-
40	Zirconium-89	D, see ^{86}Zr	2E+3	4E+3	1E-6	5E-9	2E-5	2E-4
		W, see ^{86}Zr	-	2E+3	1E-6	3E-9	-	-
		Y, see ^{86}Zr	-	2E+3	1E-6	3E-9	-	-
40	Zirconium-93	D, see ^{86}Zr	1E+3 Bone surf (3E+3)	6E+0 Bone surf (2E+1)	3E-9	-	-	-
		W, see ^{86}Zr	-	2E+1 Bone surf (6E+1)	1E-8	2E-11 -	4E-5 -	4E-4 -
		Y, see ^{86}Zr	-	6E+1 Bone surf (7E+1)	2E-8	9E-11 -	- -	- -
40	Zirconium-95	D, see ^{86}Zr	1E+3	1E+2 Bone surf (3E+2)	5E-8	-	2E-5	2E-4
		W, see ^{86}Zr	-	4E+2	2E-7	4E-10 -	- -	- -
		Y, see ^{86}Zr	-	3E+2	1E-7	5E-10 4E-10	- -	- -
40	Zirconium-97	D, see ^{86}Zr	6E+2	2E+3	8E-7	3E-9	9E-6	9E-5
		W, see ^{86}Zr	-	1E+3	6E-7	2E-9	-	-
		Y, see ^{86}Zr	-	1E+3	5E-7	2E-9	-	-
41	Niobium-88[2]	W, all compounds except those given for Y	5E+4 St. wall (7E+4)	2E+5	9E-5	3E-7	-	-
		Y, oxides and hydroxides	-	2E+5	9E-5	- 3E-7	1E-3 -	1E-2 -
41	Niobium-89m[2] (66 min)	W, see ^{88}Nb	1E+4	4E+4	2E-5	6E-8	1E-4	1E-3
		Y, see ^{88}Nb	-	4E+4	2E-5	5E-8	-	-
41	Niobium-89 (122 min)	W, see ^{88}Nb	5E+3	2E+4	8E-6	3E-8	7E-5	7E-4
		Y, see ^{88}Nb	-	2E+4	6E-6	2E-8	-	-
41	Niobium-90	W, see ^{88}Nb	1E+3	3E+3	1E-6	4E-9	1E-5	1E-4
		Y, see ^{88}Nb	-	2E+3	1E-6	3E-9	-	-
41	Niobium-93m	W, see ^{88}Nb	9E+3 LLI wall (1E+4)	2E+3	8E-7	3E-9	-	-
		Y, see ^{88}Nb	-	2E+2	7E-8	- 2E-10	2E-4 -	2E-3 -
41	Niobium-94	W, see ^{88}Nb	9E+2	2E+2	8E-8	3E-10	1E-5	1E-4
		Y, see ^{88}Nb	-	2E+1	6E-9	2E-11	-	-
41	Niobium-95m	W, see ^{88}Nb	2E+3 LLI wall (2E+3)	3E+3	1E-6	4E-9	-	-
		Y, see ^{88}Nb	-	2E+3	9E-7	- 3E-9	3E-5 -	3E-4 -

58 FR 67657

Atomic No.	Radionuclide	Class	Table 1 Occupational Values Col. 1 Oral Ingestion ALI (μCi)	Table 1 Occupational Values Col. 2 Inhalation ALI (μCi)	Table 1 Occupational Values Col. 3 Inhalation DAC (μCi/ml)	Table 2 Effluent Concentrations Col. 1 Air (μCi/ml)	Table 2 Effluent Concentrations Col. 2 Water (μCi/ml)	Table 3 Releases to Sewers Monthly Average Concentration (μCi/ml)
41	Niobium-95	W, see ^{88}Nb	2E+3	1E+3	5E-7	2E-9	3E-5	3E-4
		Y, see ^{88}Nb	-	1E+3	5E-7	2E-9	-	-
41	Niobium-96	W, see ^{88}Nb	1E+3	3E+3	1E-6	4E-9	2E-5	2E-4
		Y, see ^{88}Nb	-	2E+3	1E-6	3E-9	-	-
41	Niobium-97[2]	W, see ^{88}Nb	2E+4	8E+4	3E-5	1E-7	3E-4	3E-3
		Y, see ^{88}Nb	-	7E+4	3E-5	1E-7	-	-
41	Niobium-98[2]	W, see ^{88}Nb	1E+4	5E+4	2E-5	8E-8	2E-4	2E-3
		Y, see ^{88}Nb	-	5E+4	2E-5	7E-8	-	-
42	Molybdenum-90	D, all compounds except those given for Y	4E+3	7E+3	3E-6	1E-8	3E-5	3E-4
		Y, oxides, hydroxides, and MoS_2	2E+3	5E+3	2E-6	6E-9	-	-
42	Molybdenum-93m	D, see ^{90}Mo	9E+3	2E+4	7E-6	2E-8	6E-5	6E-4
		Y, see ^{90}Mo	4E+3	1E+4	6E-6	2E-8	-	-
42	Molybdenum-93	D, see ^{90}Mo	4E+3	5E+3	2E-6	8E-9	5E-5	5E-4
		Y, see ^{90}Mo	2E+4	2E+2	8E-8	2E-10	-	-
42	Molybdenum-99	D, see ^{90}Mo	2E+3	3E+3	1E-6	4E-9	-	-
			LLI wall (1E+3)	-	-	-	2E-5	2E-4
		Y, see ^{90}Mo	1E+3	1E+3	6E-7	2E-9	-	-
42	Molybdenum-101[2]	D, see ^{90}Mo	4E+4	1E+5	6E-5	2E-7	-	-
			St. wall (5E+4)	-	-	-	7E-4	7E-3
		Y, see ^{90}Mo	-	1E+5	6E-5	2E-7	-	-
43	Technetium-93m[2]	D, all compounds except those given for W	7E+4	2E+5	6E-5	2E-7	1E-3	1E-2
		W, oxides, hydroxides, halides, and nitrates	-	3E+5	1E-4	4E-7	-	-
43	Technetium-93	D, see ^{93m}Tc	3E+4	7E+4	3E-5	1E-7	4E-4	4E-3
		W, see ^{93m}Tc	-	1E+5	4E-5	1E-7	-	-
43	Technetium-94m[2]	D, see ^{93m}Tc	2E+4	4E+4	2E-5	6E-8	3E-4	3E-3
		W, see ^{93m}Tc	-	6E+4	2E-5	8E-8	-	-
43	Technetium-94	D, see ^{93m}Tc	9E+3	2E+4	8E-6	3E-8	1E-4	1E-3
		W, see ^{93m}Tc	-	2E+4	1E-5	3E-8	-	-
43	Technetium-95m	D, see ^{93m}Tc	4E+3	5E+3	2E-6	8E-9	5E-5	5E-4
		W, see ^{93m}Tc	-	2E+3	8E-7	3E-9	-	-
43	Technetium-95	D, see ^{93m}Tc	1E+4	2E+4	9E-6	3E-8	1E-4	1E-3
		W, see ^{93m}Tc	-	2E+4	8E-6	3E-8	-	-
43	Technetium-96m[2]	D, see ^{93m}Tc	2E+5	3E+5	1E-4	4E-7	2E-3	2E-2
		W, see ^{93m}Tc	-	2E+5	1E-4	3E-7	-	-
43	Technetium-96	D, see ^{93m}Tc	2E+3	3E+3	1E-6	5E-9	3E-5	3E-4
		W, see ^{93m}Tc	-	2E+3	9E-7	3E-9	-	-
43	Technetium-97m	D, see ^{93m}Tc	5E+3	7E+3	3E-6	-	6E-5	6E-4
			-	St. wall (7E+3)	-	1E-8	-	-
		W, see ^{93m}Tc	-	1E+3	5E-7	2E-9	-	-

58 FR 67657

58 FR 67657

Atomic No.	Radionuclide	Class	Table 1 Occupational Values: Col. 1 Oral Ingestion ALI (μCi)	Table 1 Occupational Values: Col. 2 Inhalation ALI (μCi)	Table 1 Occupational Values: Col. 3 Inhalation DAC (μCi/ml)	Table 2 Effluent Concentrations: Col. 1 Air (μCi/ml)	Table 2 Effluent Concentrations: Col. 2 Water (μCi/ml)	Table 3 Releases to Sewers: Monthly Average Concentration (μCi/ml)
43	Technetium-97	D, see ^{93m}Tc	4E+4	5E+4	2E-5	7E-8	5E-4	5E-3
		W, see ^{93m}Tc	-	6E+3	2E-6	8E-9	-	-
43	Technetium-98	D, see ^{93m}Tc	1E+3	2E+3	7E-7	2E-9	1E-5	1E-4
		W, see ^{93m}Tc	-	3E+2	1E-7	4E-10	-	-
43	Technetium-99m	D, see ^{93m}Tc	8E+4	2E+5	6E-5	2E-7	1E-3	1E-2
		W, see ^{93m}Tc	-	2E+5	1E-4	3E-7	-	-
43	Technetium-99	D, see ^{93m}Tc	4E+3	5E+3	2E-6	-	6E-5	6E-4
			-	St. wall (6E+3)	-	8E-9	-	-
		W, see ^{93m}Tc	-	7E+2	3E-7	9E-10	-	-
43	Technetium-101[2]	D, see ^{93m}Tc	9E+4	3E+5	1E-4	5E-7	-	-
			St. wall (1E+5)	-	-	-	2E-3	2E-2
		W, see ^{93m}Tc	-	4E+5	2E-4	5E-7	-	-
43	Technetium-104[2]	D, see ^{93m}Tc	2E+4	7E+4	3E-5	1E-7	-	-
			St. wall (3E+4)	-	-	-	4E-4	4E-3
		W, see ^{93m}Tc	-	9E+4	4E-5	1E-7	-	-
44	Ruthenium-94[2]	D, all compounds except those given for W and Y	2E+4	4E+4	2E-5	6E-8	2E-4	2E-3
		W, halides	-	6E+4	3E-5	9E-8	-	-
		Y, oxides and hydroxides	-	6E+4	2E-5	8E-8	-	-
44	Ruthenium-97	D, see ^{94}Ru	8E+3	2E+4	8E-6	3E-8	1E-4	1E-3
		W, see ^{94}Ru	-	1E+4	5E-6	2E-8	-	-
		Y, see ^{94}Ru	-	1E+4	5E-6	2E-8	-	-
44	Ruthenium-103	D, see ^{94}Ru	2E+3	2E+3	7E-7	2E-9	3E-5	3E-4
		W, see ^{94}Ru	-	1E+3	4E-7	1E-9	-	-
		Y, see ^{94}Ru	-	6E+2	3E-7	9E-10	-	-
44	Ruthenium-105	D, see ^{94}Ru	5E+3	1E+4	6E-6	2E-8	7E-5	7E-4
		W, see ^{94}Ru	-	1E+4	6E-6	2E-8	-	-
		Y, see ^{94}Ru	-	1E+4	5E-6	2E-8	-	-
44	Ruthenium-106	D, see ^{94}Ru	2E+2	9E+1	4E-8	1E-10	-	-
			LLI wall (2E+2)	-	-	-	3E-6	3E-5
		W, see ^{94}Ru	-	5E+1	2E-8	8E-11	-	-
		Y, see ^{94}Ru	-	1E+1	5E-9	2E-11	-	-
45	Rhodium-99m	D, all compounds except those given for W and Y	2E+4	6E+4	2E-5	8E-8	2E-4	2E-3
		W, halides	-	8E+4	3E-5	1E-7	-	-
		Y, oxides and hydroxides	-	7E+4	3E-5	9E-8	-	-
45	Rhodium-99	D, see ^{99m}Rh	2E+3	3E+3	1E-6	4E-9	3E-5	3E-4
		W, see ^{99m}Rh	-	2E+3	9E-7	3E-9	-	-
		Y, see ^{99m}Rh	-	2E+3	8E-7	3E-9	-	-

Atomic No.	Radionuclide	Class	Table 1 Occupational Values Col. 1 Oral Ingestion ALI (μCi)	Table 1 Occupational Values Col. 2 Inhalation ALI (μCi)	Table 1 Occupational Values Col. 3 Inhalation DAC (μCi/ml)	Table 2 Effluent Concentrations Col. 1 Air (μCi/ml)	Table 2 Effluent Concentrations Col. 2 Water (μCi/ml)	Table 3 Releases to Sewers Monthly Average Concentration (μCi/ml)
45	Rhodium-100	D, see ^{99m}Rh	2E+3	5E+3	2E-6	7E-9	2E-5	2E-4
		W, see ^{99m}Rh	-	4E+3	2E-6	6E-9	-	-
		Y, see ^{99m}Rh	-	4E+3	2E-6	5E-9	-	-
45	Rhodium-101m	D, see ^{99m}Rh	6E+3	1E+4	5E-6	2E-8	8E-5	8E-4
		W, see ^{99m}Rh	-	8E+3	4E-6	1E-8	-	-
		Y, see ^{99m}Rh	-	8E+3	3E-6	1E-8	-	-
45	Rhodium-101	D, see ^{99m}Rh	2E+3	5E+2	2E-7	7E-10	3E-5	3E-4
		W, see ^{99m}Rh	-	8E+2	3E-7	1E-9	-	-
		Y, see ^{99m}Rh	-	2E+2	6E-8	2E-10	-	-
45	Rhodium-102m	D, see ^{99m}Rh	1E+3 LLI wall (1E+3)	5E+2	2E-7	7E-10	-	-
		W, see ^{99m}Rh	-	4E+2	2E-7	5E-10	2E-5	2E-4
		Y, see ^{99m}Rh	-	1E+2	5E-8	2E-10	-	-
45	Rhodium-102	D, see ^{99m}Rh	6E+2	9E+1	4E-8	1E-10	8E-6	8E-5
		W, see ^{99m}Rh	-	2E+2	7E-8	2E-10	-	-
		Y, see ^{99m}Rh	-	6E+1	2E-8	8E-11	-	-
45	Rhodium-103m[2]	D, see ^{99m}Rh	4E+5	1E+6	5E-4	2E-6	6E-3	6E-2
		W, see ^{99m}Rh	-	1E+6	5E-4	2E-6	-	-
		Y, see ^{99m}Rh	-	1E+6	5E-4	2E-6	-	-
45	Rhodium-105	D, see ^{99m}Rh	4E+3 LLI wall (4E+3)	1E+4	5E-6	2E-8	-	-
		W, see ^{99m}Rh	-	6E+3	3E-6	9E-9	5E-5	5E-4
		Y, see ^{99m}Rh	-	6E+3	2E-6	8E-9	-	-
45	Rhodium-106m	D, see ^{99m}Rh	8E+3	3E+4	1E-5	4E-8	1E-4	1E-3
		W, see ^{99m}Rh	-	4E+4	2E-5	5E-8	-	-
		Y, see ^{99m}Rh	-	4E+4	1E-5	5E-8	-	-
45	Rhodium-107[2]	D, see ^{99m}Rh	7E+4 St. wall (9E+4)	2E+5	1E-4	3E-7	-	-
		W, see ^{99m}Rh	-	3E+5	1E-4	4E-7	1E-3	1E-2
		Y, see ^{99m}Rh	-	3E+5	1E-4	3E-7	-	-
46	Palladium-100	D, all compounds except those given for W and Y	1E+3	1E+3	6E-7	2E-9	2E-5	2E-4
		W, nitrates	-	1E+3	5E-7	2E-9	-	-
		Y, oxides and hydroxides	-	1E+3	6E-7	2E-9	-	-
46	Palladium-101	D, see ^{100}Pd	1E+4	3E+4	1E-5	5E-8	2E-4	2E-3
		W, see ^{100}Pd	-	3E+4	1E-5	5E-8	-	-
		Y, see ^{100}Pd	-	3E+4	1E-5	4E-8	-	-
46	Palladium-103	D, see ^{100}Pd	6E+3 LLI wall (7E+3)	6E+3	3E-6	9E-9	-	-
		W, see ^{100}Pd	-	4E+3	2E-6	6E-9	1E-4	1E-3
		Y, see ^{100}Pd	-	4E+3	1E-6	5E-9	-	-
46	Palladium-107	D, see ^{100}Pd	3E+4 LLI wall (4E+4)	2E+4 Kidneys (2E+4)	9E-6	-	-	-
		W, see ^{100}Pd	-	7E+3	3E-6	1E-8	5E-4	5E-3
		Y, see ^{100}Pd	-	4E+2	2E-7	6E-10	-	-

58 FR 67657

Atomic No.	Radionuclide	Class	Table 1 Occupational Values: Col. 1 Oral Ingestion ALI (μCi)	Table 1 Occupational Values: Col. 2 Inhalation ALI (μCi)	Table 1 Occupational Values: Col. 3 Inhalation DAC (μCi/ml)	Table 2 Effluent Concentrations: Col. 1 Air (μCi/ml)	Table 2 Effluent Concentrations: Col. 2 Water (μCi/ml)	Table 3 Releases to Sewers: Monthly Average Concentration (μCi/ml)
46	Palladium-109	D, see ^{100}Pd	2E+3	6E+3	3E-6	9E-9	3E-5	3E-4
		W, see ^{100}Pd	-	5E+3	2E-6	8E-9	-	-
		Y, see ^{100}Pd	-	5E+3	2E-6	6E-9	-	-
47	Silver-102[2]	D, all compounds except those given for W and Y	5E+4	2E+5	8E-5	2E-7	-	-
			St. wall (6E+4)	-	-	-	9E-4	9E-3
		W, nitrates and sulfides	-	2E+5	9E-5	3E-7	-	-
		Y, oxides and hydroxides	-	2E+5	8E-5	3E-7	-	-
47	Silver-103[2]	D, see ^{102}Ag	4E+4	1E+5	4E-5	1E-7	5E-4	5E-3
		W, see ^{102}Ag	-	1E+5	5E-5	2E-7	-	-
		Y, see ^{102}Ag	-	1E+5	5E-5	2E-7	-	-
47	Silver-104m[2]	D, see ^{102}Ag	3E+4	9E+4	4E-5	1E-7	4E-4	4E-3
		W, see ^{102}Ag	-	1E+5	5E-5	2E-7	-	-
		Y, see ^{102}Ag	-	1E+5	5E-5	2E-7	-	-
47	Silver-104[2]	D, see ^{102}Ag	2E+4	7E+4	3E-5	1E-7	3E-4	3E-3
		W, see ^{102}Ag	-	1E+5	6E-5	2E-7	-	-
		Y, see ^{102}Ag	-	1E+5	6E-5	2E-7	-	-
47	Silver-105	D, see ^{102}Ag	3E+3	1E+3	4E-7	1E-9	4E-5	4E-4
		W, see ^{102}Ag	-	2E+3	7E-7	2E-9	-	-
		Y, see ^{102}Ag	-	2E+3	7E-7	2E-9	-	-
47	Silver-106m	D, see ^{102}Ag	8E+2	7E+2	3E-7	1E-9	1E-5	1E-4
		W, see ^{102}Ag	-	9E+2	4E-7	1E-9	-	-
		Y, see ^{102}Ag	-	9E+2	4E-7	1E-9	-	-
47	Silver-106[2]	D, see ^{102}Ag	6E+4	2E+5	8E-5	3E-7	-	-
			St. wall (6E+4)	-	-	-	9E-4	9E-3
		W, see ^{102}Ag	-	2E+5	9E-5	3E-7	-	-
		Y, see ^{102}Ag	-	2E+5	8E-5	3E-7	-	-
47	Silver-108m	D, see ^{102}Ag	6E+2	2E+2	8E-8	3E-10	9E-6	9E-5
		W, see ^{102}Ag	-	3E+2	1E-7	4E-10	-	-
		Y, see ^{102}Ag	-	2E+1	1E-8	3E-11	-	-
47	Silver-110m	D, see ^{102}Ag	5E+2	1E+2	5E-8	2E-10	6E-6	6E-5
		W, see ^{102}Ag	-	2E+2	8E-8	3E-10	-	-
		Y, see ^{102}Ag	-	9E+1	4E-8	1E-10	-	-
47	Silver-111	D, see ^{102}Ag	9E+2 LLI wall (1E+3)	2E+3 Liver (2E+3)	6E-7	-	-	-
		W, see ^{102}Ag	-	9E+2	4E-7	1E-9	2E-5	2E-4
		Y, see ^{102}Ag	-	9E+2	4E-7	1E-9	-	-
47	Silver-112	D, see ^{102}Ag	3E+3	8E+3	3E-6	1E-8	4E-5	4E-4
		W, see ^{102}Ag	-	1E+4	4E-6	1E-8	-	-
		Y, see ^{102}Ag	-	9E+3	4E-6	1E-8	-	-

58 FR 67657

58 FR 67657

Atomic No.	Radionuclide	Class	Table 1 Occupational Values Col. 1 Oral Ingestion ALI (μCi)	Table 1 Occupational Values Col. 2 Inhalation ALI (μCi)	Table 1 Occupational Values Col. 3 Inhalation DAC (μCi/ml)	Table 2 Effluent Concentrations Col. 1 Air (μCi/ml)	Table 2 Effluent Concentrations Col. 2 Water (μCi/ml)	Table 3 Releases to Sewers Monthly Average Concentration (μCi/ml)
47	Silver-115[2]	D, see ^{102}Ag	3E+4	9E+4	4E-5	1E-7	-	-
			St. wall (3E+4)	-	-	-	4E-4	4E-3
		W, see ^{102}Ag	-	9E+4	4E-5	1E-7	-	-
		Y, see ^{102}Ag	-	8E+4	3E-5	1E-7	-	-
48	Cadmium-104[2]	D, all compounds except those given for W and Y	2E+4	7E+4	3E-5	9E-8	3E-4	3E-3
		W, sulfides; halides, and nitrates	-	1E+5	5E-5	2E-7	-	-
		Y, oxides and hydroxides	-	1E+5	5E-5	2E-7	-	-
48	Cadmium-107	D, see ^{104}Cd	2E+4	5E+4	2E-5	8E-8	3E-4	3E-3
		W, see ^{104}Cd	-	6E+4	2E-5	8E-8	-	-
		Y, see ^{104}Cd	-	5E+4	2E-5	7E-8	-	-
48	Cadmium-109	D, see ^{104}Cd	3E+2 Kidneys (4E+2)	4E+1 Kidneys (5E+1)	1E-8	-	-	-
		W, see ^{104}Cd	-	1E+2	5E-8	7E-11	6E-6	6E-5
		Y, see ^{104}Cd	-	Kidneys (1E+2) 1E+2	5E-8	2E-10 2E-10	- -	- -
48	Cadmium-113m	D, see ^{104}Cd	2E+1 Kidneys (4E+1)	2E+0 Kidneys (4E+0)	1E-9	-	-	-
		W, see ^{104}Cd	-	8E+0	4E-9	5E-12	5E-7	5E-6
		Y, see ^{104}Cd	-	Kidneys (1E+1) 1E+1	5E-9	2E-11 2E-11	- -	- -
48	Cadmium-113	D, see ^{104}Cd	2E+1 Kidneys (3E+1)	2E+0 Kidneys (3E+0)	9E-10	-	-	-
		W, see ^{104}Cd	-	8E+0	3E-9	5E-12	4E-7	4E-6
		Y, see ^{104}Cd	-	Kidneys (1E+1) 1E+1	6E-9	2E-11 2E-11	- -	- -
48	Cadmium-115m	D, see ^{104}Cd	3E+2	5E+1 Kidneys (8E+1)	2E-8	- -	4E-6 1E-10	4E-5 -
		W, see ^{104}Cd	-	1E+2	5E-8	2E-10	-	-
		Y, see ^{104}Cd	-	1E+2	6E-8	2E-10	-	-
48	Cadmium-115	D, see ^{104}Cd	9E+2 LLI wall (1E+3)	1E+3 -	6E-7 -	2E-9 -	- 1E-5	- 1E-4
		W, see ^{104}Cd	-	1E+3	5E-7	2E-9	-	-
		Y, see ^{104}Cd	-	1E+3	6E-7	2E-9	-	-
48	Cadmium-117m	D, see ^{104}Cd	5E+3	1E+4	5E-6	2E-8	6E-5	6E-4
		W, see ^{104}Cd	-	2E+4	7E-6	2E-8	-	-
		Y, see ^{104}Cd	-	1E+4	6E-6	2E-8	-	-

58 FR 67657

Atomic No.	Radionuclide	Class	Table 1 Occupational Values Col. 1 Oral Ingestion ALI (μCi)	Table 1 Occupational Values Col. 2 Inhalation ALI (μCi)	Table 1 Occupational Values Col. 3 Inhalation DAC (μCi/ml)	Table 2 Effluent Concentrations Col. 1 Air (μCi/ml)	Table 2 Effluent Concentrations Col. 2 Water (μCi/ml)	Table 3 Releases to Sewers Monthly Average Concentration (μCi/ml)
48	Cadmium-117	D, see ^{104}Cd	5E+3	1E+4	5E-6	2E-8	6E-5	6E-4
		W, see ^{104}Cd	-	2E+4	7E-6	2E-8	-	-
		Y, see ^{104}Cd	-	1E+4	6E-6	2E-8	-	-
49	Indium-109	D, all compounds except those given for W	2E+4	4E+4	2E-5	6E-8	3E-4	3E-3
		W, oxides, hydroxides, halides, and nitrates	-	6E+4	3E-5	9E-8	-	-
49	Indium-110[2] (69.1 min)	D, see ^{109}In	2E+4	4E+4	2E-5	6E-8	2E-4	2E-3
		W, see ^{109}In	-	6E+4	2E-5	8E-8	-	-
49	Indium-110 (4.9 h)	D, see ^{109}In	5E+3	2E+4	7E-6	2E-8	7E-5	7E-4
		W, see ^{109}In	-	2E+4	8E-6	3E-8	-	-
49	Indium-111	D, see ^{109}In	4E+3	6E+3	3E-6	9E-9	6E-5	6E-4
		W, see ^{109}In	-	6E+3	3E-6	9E-9	-	-
49	Indium-112[2]	D, see ^{109}In	2E+5	6E+5	3E-4	9E-7	2E-3	2E-2
		W, see ^{109}In	-	7E+5	3E-4	1E-6	-	-
49	Indium-113m[2]	D, see ^{109}In	5E+4	1E+5	6E-5	2E-7	7E-4	7E-3
		W, see ^{109}In	-	2E+5	8E-5	3E-7	-	-
49	Indium-114m	D, see ^{109}In	3E+2 LLI wall (4E+2)	6E+1	3E-8	9E-11	-	-
		W, see ^{109}In	-	1E+2	4E-8	1E-10	5E-6 -	5E-5 -
49	Indium-115m	D, see ^{109}In	1E+4	4E+4	2E-5	6E-8	2E-4	2E-3
		W, see ^{109}In	-	5E+4	2E-5	7E-8	-	-
49	Indium-115	D, see ^{109}In	4E+1	1E+0	6E-10	2E-12	5E-7	5E-6
		W, see ^{109}In	-	5E+0	2E-9	8E-12	-	-
49	Indium-116m[2]	D, see ^{109}In	2E+4	8E+4	3E-5	1E-7	3E-4	3E-3
		W, see ^{109}In	-	1E+5	5E-5	2E-7	-	-
49	Indium-117m[2]	D, see ^{109}In	1E+4	3E+4	1E-5	5E-8	2E-4	2E-3
		W, see ^{109}In	-	4E+4	2E-5	6E-8	-	-
49	Indium-117[2]	D, see ^{109}In	6E+4	2E+5	7E-5	2E-7	8E-4	8E-3
		W, see ^{109}In	-	2E+5	9E-5	3E-7	-	-
49	Indium-119m[2]	D, see ^{109}In	4E+4 St. wall (5E+4)	1E+5	5E-5	2E-7	-	-
		W, see ^{109}In	-	1E+5	6E-5	2E-7	7E-4 -	7E-3 -
50	Tin-110	D, all compounds except those given for W	4E+3	1E+4	5E-6	2E-8	5E-5	5E-4
		W, sulfides, oxides, hydroxides, halides, nitrates, and stannic phosphate	-	1E+4	5E-6	2E-8	-	-
50	Tin-111[2]	D, see ^{110}Sn	7E+4	2E+5	9E-5	3E-7	1E-3	1E-2
		W, see ^{110}Sn	-	3E+5	1E-4	4E-7	-	-

Atomic No.	Radionuclide	Class	Table 1 Occupational Values Col. 1 Oral Ingestion ALI (μCi)	Table 1 Occupational Values Col. 2 Inhalation ALI (μCi)	Table 1 Occupational Values Col. 3 Inhalation DAC (μCi/ml)	Table 2 Effluent Concentrations Col. 1 Air (μCi/ml)	Table 2 Effluent Concentrations Col. 2 Water (μCi/ml)	Table 3 Releases to Sewers Monthly Average Concentration (μCi/ml)
50	Tin-113	D, see ^{110}Sn	2E+3 LLI wall (2E+3)	1E+3 -	5E-7 -	2E-9 -	- 3E-5	- 3E-4
		W, see ^{110}Sn	-	5E+2	2E-7	8E-10	-	-
50	Tin-117m	D, see ^{110}Sn	2E+3 LLI wall (2E+3)	1E+3 Bone surf (2E+3)	5E-7 -	- 3E-9	- 3E-5	- 3E-4
		W, see ^{110}Sn	-	1E+3	6E-7	2E-9	-	-
50	Tin-119m	D, see ^{110}Sn	3E+3 LLI wall (4E+3)	2E+3 -	1E-6 -	3E-9 -	- 6E-5	- 6E-4
		W, see ^{110}Sn	-	1E+3	4E-7	1E-9	-	-
50	Tin-121m	D, see ^{110}Sn	3E+3 LLI wall (4E+3)	9E+2 -	4E-7 -	1E-9 -	- 5E-5	- 5E-4
		W, see ^{110}Sn	-	5E+2	2E-7	8E-10	-	-
50	Tin-121	D, see ^{110}Sn	6E+3 LLI wall (6E+3)	2E+4 -	6E-6 -	2E-8 -	- 8E-5	- 8E-4
		W, see ^{110}Sn	-	1E+4	5E-6	2E-8	-	-
50	Tin-123m[2]	D, see ^{110}Sn W, see ^{110}Sn	5E+4 -	1E+5 1E+5	5E-5 6E-5	2E-7 2E-7	7E-4 -	7E-3 -
50	Tin-123	D, see ^{110}Sn	5E+2 LLI wall (6E+2)	6E+2 -	3E-7 -	9E-10 -	- 9E-6	- 9E-5
		W, see ^{110}Sn	-	2E+2	7E-8	2E-10	-	-
50	Tin-125	D, see ^{110}Sn	4E+2 LLI wall (5E+2)	9E+2 -	4E-7 -	1E-9 -	- 6E-6	- 6E-5
		W, see ^{110}Sn	-	4E+2	1E-7	5E-10	-	-
50	Tin-126	D, see ^{110}Sn W, see ^{110}Sn	3E+2 -	6E+1 7E+1	2E-8 3E-8	8E-11 9E-11	4E-6 -	4E-5 -
50	Tin-127	D, see ^{110}Sn W, see ^{110}Sn	7E+3 -	2E+4 2E+4	8E-6 8E-6	3E-8 3E-8	9E-5 -	9E-4 -
50	Tin-128[2]	D, see ^{110}Sn W, see ^{110}Sn	9E+3 -	3E+4 4E+4	1E-5 1E-5	4E-8 5E-8	1E-4 -	1E-3 -
51	Antimony-115[2]	D, all compounds except those given for W	8E+4	2E+5	1E-4	3E-7	1E-3	1E-2
		W, oxides, hydroxides, halides, sulfides, sulfates, and nitrates	-	3E+5	1E-4	4E-7	-	-
51	Antimony-116m[2]	D, see ^{115}Sb W, see ^{115}Sb	2E+4 -	7E+4 1E+5	3E-5 6E-5	1E-7 2E-7	3E-4 -	3E-3 -
51	Antimony-116[2]	D, see ^{115}Sb	7E+4 St. wall (9E+4)	3E+5 -	1E-4 -	4E-7 -	- 1E-3	- 1E-2
		W, see ^{115}Sb	-	3E+5	1E-4	5E-7	-	-
51	Antimony-117	D, see ^{115}Sb W, see ^{115}Sb	7E+4 -	2E+5 3E+5	9E-5 1E-4	3E-7 4E-7	9E-4 -	9E-3 -

58 FR 67657

Atomic No.	Radionuclide	Class	Table 1 Occupational Values Col. 1 Oral Ingestion ALI (μCi)	Table 1 Occupational Values Col. 2 Inhalation ALI (μCi)	Table 1 Occupational Values Col. 3 Inhalation DAC (μCi/ml)	Table 2 Effluent Concentrations Col. 1 Air (μCi/ml)	Table 2 Effluent Concentrations Col. 2 Water (μCi/ml)	Table 3 Releases to Sewers Monthly Average Concentration (μCi/ml)
51	Antimony-118m	D, see ^{115}Sb	6E+3	2E+4	8E-6	3E-8	7E-5	7E-4
		W, see ^{115}Sb	5E+3	2E+4	9E-6	3E-8	-	-
51	Antimony-119	D, see ^{115}Sb	2E+4	5E+4	2E-5	6E-8	2E-4	2E-3
		W, see ^{115}Sb	2E+4	3E+4	1E-5	4E-8	-	-
51	Antimony-120[2] (16 min)	D, see ^{115}Sb	1E+5 St. wall (2E+5)	4E+5 -	2E-4 -	6E-7 -	- 2E-3	- 2E-2
		W, see ^{115}Sb	-	5E+5	2E-4	7E-7	-	-
51	Antimony-120 (5.76 d)	D, see ^{115}Sb	1E+3	2E+3	9E-7	3E-9	1E-5	1E-4
		W, see ^{115}Sb	9E+2	1E+3	5E-7	2E-9	-	-
51	Antimony-122	D, see ^{115}Sb	8E+2 LLI wall (8E+2)	2E+3 -	1E-6 -	3E-9 -	- 1E-5	- 1E-4
		W, see ^{115}Sb	7E+2	1E+3	4E-7	2E-9	-	-
51	Antimony-124m[2]	D, see ^{115}Sb	3E+5	8E+5	4E-4	1E-6	3E-3	3E-2
		W, see ^{115}Sb	2E+5	6E+5	2E-4	8E-7	-	-
51	Antimony-124	D, see ^{115}Sb	6E+2	9E+2	4E-7	1E-9	7E-6	7E-5
		W, see ^{115}Sb	5E+2	2E+2	1E-7	3E-10	-	-
51	Antimony-125	D, see ^{115}Sb	2E+3	2E+3	1E-6	3E-9	3E-5	3E-4
		W, see ^{115}Sb	-	5E+2	2E-7	7E-10	-	-
51	Antimony-126m[2]	D, see ^{115}Sb	5E+4 St. wall (7E+4)	2E+5 -	8E-5 -	3E-7 -	- 9E-4	- 9E-3
		W, see ^{115}Sb	-	2E+5	8E-5	3E-7	-	-
51	Antimony-126	D, see ^{115}Sb	6E+2	1E+3	5E-7	2E-9	7E-6	7E-5
		W, see ^{115}Sb	5E+2	5E+2	2E-7	7E-10	-	-
51	Antimony-127	D, see ^{115}Sb	8E+2 LLI wall (8E+2)	2E+3 -	9E-7 -	3E-9 -	- 1E-5	- 1E-4
		W, see ^{115}Sb	7E+2	9E+2	4E-7	1E-9	-	-
51	Antimony-128[2] (10.4 min)	D, see ^{115}Sb	8E+4 St. wall (1E+5)	4E+5 -	2E-4 -	5E-7 -	- 1E-3	- 1E-2
		W, see ^{115}Sb	-	4E+5	2E-4	6E-7	-	-
51	Antimony-128 (9.01 h)	D, see ^{115}Sb	1E+3	4E+3	2E-6	6E-9	2E-5	2E-4
		W, see ^{115}Sb	-	3E+3	1E-6	5E-9	-	-
51	Antimony-129	D, see ^{115}Sb	3E+3	9E+3	4E-6	1E-8	4E-5	4E-4
		W, see ^{115}Sb	-	9E+3	4E-6	1E-8	-	-
51	Antimony-130[2]	D, see ^{115}Sb	2E+4	6E+4	3E-5	9E-8	3E-4	3E-3
		W, see ^{115}Sb	-	8E+4	3E-5	1E-7	-	-
51	Antimony-131[2]	D, see ^{115}Sb	1E+4 Thyroid (2E+4)	2E+4 Thyroid (4E+4) - 2E+4 Thyroid (4E+4)	1E-5 -	- 6E-8 -	- 2E-4 -	- 2E-3 -
		W, see ^{115}Sb	-		1E-5	6E-8	-	-

58 FR 67657

58 FR 67657

Atomic No.	Radionuclide	Class	Table 1 Occupational Values: Col. 1 Oral Ingestion ALI (μCi)	Table 1 Occupational Values: Col. 2 Inhalation ALI (μCi)	Table 1 Occupational Values: Col. 3 Inhalation DAC (μCi/ml)	Table 2 Effluent Concentrations: Col. 1 Air (μCi/ml)	Table 2 Effluent Concentrations: Col. 2 Water (μCi/ml)	Table 3 Releases to Sewers: Monthly Average Concentration (μCi/ml)
52	Tellurium-116	D, all compounds except those given for W	8E+3	2E+4	9E-6	3E-8	1E-4	1E-3
		W, oxides, hydroxides, and nitrates	-	3E+4	1E-5	4E-8	-	-
52	Tellurium-121m	D, see ^{116}Te	5E+2 Bone surf (7E+2)	2E+2 Bone surf (4E+2)	8E-8	-	-	-
		W, see ^{116}Te	-	4E+2	2E-7	5E-10 6E-10	1E-5 -	1E-4 -
52	Tellurium-121	D, see ^{116}Te	3E+3	4E+3	2E-6	6E-9	4E-5	4E-4
		W, see ^{116}Te	-	3E+3	1E-6	4E-9	-	-
52	Tellurium-123m	D, see ^{116}Te	6E+2 Bone surf (1E+3)	2E+2 Bone surf (5E+2)	9E-8	-	-	-
		W, see ^{116}Te	-	5E+2	2E-7	8E-10 8E-10	1E-5 -	1E-4 -
52	Tellurium-123	D, see ^{116}Te	5E+2 Bone surf (1E+3)	2E+2 Bone surf (5E+2)	8E-8	-	-	-
		W, see ^{116}Te	- -	4E+2 Bone surf (1E+3)	2E-7 -	7E-10 2E-9	2E-5 -	2E-4 -
52	Tellurium-125m	D, see ^{116}Te	1E+3 Bone surf (1E+3)	4E+2 Bone surf (1E+3)	2E-7 -	- 1E-9	- 2E-5	- 2E-4
		W, see ^{116}Te	-	7E+2	3E-7	1E-9	-	-
52	Tellurium-127m	D, see ^{116}Te	6E+2	3E+2 Bone surf (4E+2)	1E-7 -	- 6E-10	9E-6 -	9E-5 -
		W, see ^{116}Te	-	3E+2	1E-7	4E-10	-	-
52	Tellurium-127	D, see ^{116}Te W, see ^{116}Te	7E+3 -	2E+4 2E+4	9E-6 7E-6	3E-8 2E-8	1E-4 -	1E-3 -
52	Tellurium-129m	D, see ^{116}Te W, see ^{116}Te	5E+2 -	6E+2 2E+2	3E-7 1E-7	9E-10 3E-10	7E-6 -	7E-5 -
52	Tellurium-129[2]	D, see ^{116}Te W, see ^{116}Te	3E+4 -	6E+4 7E+4	3E-5 3E-5	9E-8 1E-7	4E-4 -	4E-3 -
52	Tellurium-131m	D, see ^{116}Te	3E+2 Thyroid (6E+2)	4E+2 Thyroid (1E+3)	2E-7 -	- 2E-9	- 8E-6	- 8E-5
		W, see ^{116}Te	- -	4E+2 Thyroid (9E+2)	2E-7 -	- 1E-9	- -	- -
52	Tellurium-131[2]	D, see ^{116}Te	3E+3 Thyroid (6E+3)	5E+3 Thyroid (1E+4)	2E-6 -	- 2E-8	- 8E-5	- 8E-4
		W, see ^{116}Te	- -	5E+3 Thyroid (1E+4)	2E-6 -	- 2E-8	- -	- -

Atomic No.	Radionuclide	Class	Table 1 Occupational Values Col. 1 Oral Ingestion ALI (μCi)	Table 1 Occupational Values Col. 2 Inhalation ALI (μCi)	Table 1 Occupational Values Col. 3 Inhalation DAC (μCi/ml)	Table 2 Effluent Concentrations Col. 1 Air (μCi/ml)	Table 2 Effluent Concentrations Col. 2 Water (μCi/ml)	Table 3 Releases to Sewers Monthly Average Concentration (μCi/ml)
52	Tellurium-132	D, see ^{116}Te	2E+2 Thyroid (7E+2)	2E+2 Thyroid (8E+2)	9E-8	-	-	-
		W, see ^{116}Te	-	2E+2 Thyroid (6E+2)	9E-8	1E-9	9E-6	9E-5
			-	-	-	9E-10	-	-
52	Tellurium-133m[2]	D, see ^{116}Te	3E+3 Thyroid (6E+3)	5E+3 Thyroid (1E+4)	2E-6	-	-	-
		W, see ^{116}Te	-	5E+3 Thyroid (1E+4)	2E-6	2E-8	9E-5	9E-4
			-	-	-	2E-8	-	-
52	Tellurium-133[2]	D, see ^{116}Te	1E+4 Thyroid (3E+4)	2E+4 Thyroid (6E+4)	9E-6	-	-	-
		W, see ^{116}Te	-	2E+4 Thyroid (6E+4)	9E-6	8E-8	4E-4	4E-3
			-	-	-	8E-8	-	-
52	Tellurium-134[2]	D, see ^{116}Te	2E+4 Thyroid (2E+4)	2E+4 Thyroid (5E+4)	1E-5	-	-	-
		W, see ^{116}Te	-	2E+4 Thyroid (5E+4)	1E-5	7E-8	3E-4	3E-3
			-	-	-	7E-8	-	-
53	Iodine-120m[2]	D, all compounds	1E+4 Thyroid (1E+4)	2E+4	9E-6	3E-8	-	-
				-	-	-	2E-4	2E-3
53	Iodine-120[2]	D, all compounds	4E+3 Thyroid (8E+3)	9E+3 Thyroid (1E+4)	4E-6	-	-	-
						2E-8	1E-6	1E-3
53	Iodine-121	D, all compounds	1E+4 Thyroid (3E+4)	2E+4 Thyroid (5E+4)	8E-6	-	-	-
						7E-8	4E-4	4E-3
53	Iodine-123	D, all compounds	3E+3 Thyroid (1E+4)	6E+3 Thyroid (2E+4)	3E-6	-	-	-
						2E-8	1E-4	1E-3
53	Iodine-124	D, all compounds	5E+1 Thyroid (2E+2)	8E+1 Thyroid (3E+2)	3E-8	-	-	-
						4E-10	2E-6	2E-5
53	Iodine-125	D, all compounds	4E+1 Thyroid (1E+2)	6E+1 Thyroid (2E+2)	3E-8	-	-	-
						3E-10	2E-6	2E-5
53	Iodine-126	D, all compounds	2E+1 Thyroid (7E+1)	4E+1 Thyroid (1E+2)	1E-8	-	-	-
						2E-10	1E-6	1E-5
53	Iodine-128[2]	D, all compounds	4E+4 St. wall (6E+4)	1E+5	5E-5	2E-7	-	-
				-	-	-	8E-4	8E-3
53	Iodine-129	D, all compounds	5E+0 Thyroid (2E+1)	9E+0 Thyroid (3E+1)	4E-9	-	-	-
						4E-11	2E-7	2E-6

58 FR 67657

58 FR 67857

Atomic No.	Radionuclide	Class	Table 1 Occupational Values			Table 2 Effluent Concentrations		Table 3 Releases to Sewers
			Col. 1 Oral Ingestion ALI (μCi)	Col. 2 Inhalation ALI (μCi)	Col. 3 Inhalation DAC (μCi/ml)	Col. 1 Air (μCi/ml)	Col. 2 Water (μCi/ml)	Monthly Average Concentration (μCi/ml)
53	Iodine-130	D, all compounds	4E+2 Thyroid (1E+3)	7E+2 Thyroid (2E+3)	3E-7 -	3E-9	2E-5	2E-4
53	Iodine-131	D, all compounds	3E+1 Thyroid (9E+1)	5E+1 Thyroid (2E+2)	2E-8 -	2E-10	1E-6	1E-5
53	Iodine-132m[2]	D, all compounds	4E+3 Thyroid (1E+4)	8E+3 Thyroid (2E+4)	4E-6 -	3E-8	1E-4	1E-3
53	Iodine-132	D, all compounds	4E+3 Thyroid (9E+3)	8E+3 Thyroid (1E+4)	3E-6 -	2E-8	1E-4	1E-3
53	Iodine-133	D, all compounds	1E+2 Thyroid (5E+2)	3E+2 Thyroid (9E+2)	1E-7 -	1E-9	7E-6	7E-5
53	Iodine-134[2]	D, all compounds	2E+4 Thyroid (3E+4)	5E+4 -	2E-5 -	6E-8 -	4E-4	4E-3
53	Iodine-135	D, all compounds	8E+2 Thyroid (3E+3)	2E+3 Thyroid (4E+3)	7E-7 -	6E-9	3E-5	3E-4
54	Xenon-120[2]	Submersion[1]	-	-	1E-5	4E-8	-	-
54	Xenon-121[2]	Submersion[1]	-	-	2E-6	1E-8	-	-
54	Xenon-122	Submersion[1]	-	-	7E-5	3E-7	-	-
54	Xenon-123	Submersion[1]	-	-	6E-6	3E-8	-	-
54	Xenon-125	Submersion[1]	-	-	2E-5	7E-8	-	-
54	Xenon-127	Submersion[1]	-	-	1E-5	6E-8	-	-
54	Xenon-129m	Submersion[1]	-	-	2E-4	9E-7	-	-
54	Xenon-131m	Submersion[1]	-	-	4E-4	2E-6	-	-
54	Xenon-133m	Submersion[1]	-	-	1E-4	6E-7	-	-
54	Xenon-133	Submersion[1]	-	-	1E-4	5E-7	-	-
54	Xenon-135m[2]	Submersion[1]	-	-	9E-6	4E-8	-	-
54	Xenon-135	Submersion[1]	-	-	1E-5	7E-8	-	-
54	Xenon-138[2]	Submersion[1]	-	-	4E-6	2E-8	-	-
55	Cesium-125[2]	D, all compounds	5E+4 St. wall (9E+4)	1E+5 -	6E-5 -	2E-7 -	1E-3	1E-2
55	Cesium-127	D, all compounds	6E+4	9E+4	4E-5	1E-7	9E-4	9E-3

Atomic No.	Radionuclide	Class	Table 1 Occupational Values: Col. 1 Oral Ingestion ALI (μCi)	Table 1 Occupational Values: Col. 2 Inhalation ALI (μCi)	Table 1 Occupational Values: Col. 3 Inhalation DAC (μCi/ml)	Table 2 Effluent Concentrations: Col. 1 Air (μCi/ml)	Table 2 Effluent Concentrations: Col. 2 Water (μCi/ml)	Table 3 Releases to Sewers: Monthly Average Concentration (μCi/ml)
55	Cesium-129	D, all compounds	2E+4	3E+4	1E-5	5E-8	3E-4	3E-3
55	Cesium-130[2]	D, all compounds	6E+4	2E+5	8E-5	3E-7	-	-
			St. wall (1E+5)	-	-	-	1E-3	1E-2
55	Cesium-131	D, all compounds	2E+4	3E+4	1E-5	4E-8	3E-4	3E-3
55	Cesium-132	D, all compounds	3E+3	4E+3	2E-6	6E-9	4E-5	4E-4
55	Cesium-134m	D, all compounds	1E+5	1E+5	6E-5	2E-7	-	-
			St. wall (1E+5)	-	-	-	2E-3	2E-2
55	Cesium-134	D, all compounds	7E+1	1E+2	4E-8	2E-10	9E-7	9E-6
55	Cesium-135m[2]	D, all compounds	1E+5	2E+5	8E-5	3E-7	1E-3	1E-2
55	Cesium-135	D, all compounds	7E+2	1E+3	5E-7	2E-9	1E-5	1E-4
55	Cesium-136	D, all compounds	4E+2	7E+2	3E-7	9E-10	6E-6	6E-5
55	Cesium-137	D, all compounds	1E+2	2E+2	6E-8	2E-10	1E-6	1E-5
55	Cesium-138[2]	D, all compounds	2E+4	6E+4	2E-5	8E-8	-	-
			St. wall (3E+4)	-	-	-	4E-4	4E-3
56	Barium-126[2]	D, all compounds	6E+3	2E+4	6E-6	2E-8	8E-5	8E-4
56	Barium-128	D, all compounds	5E+2	2E+3	7E-7	2E-9	7E-6	7E-5
56	Barium-131m[2]	D, all compounds	4E+5	1E+6	6E-4	2E-6	-	-
			St. wall (5E+5)	-	-	-	7E-3	7E-2
56	Barium-131	D, all compounds	3E+3	8E+3	3E-6	1E-8	4E-5	4E-4
56	Barium-133m	D, all compounds	2E+3	9E+3	4E-6	1E-8	-	-
			LLI wall (3E+3)	-	-	-	4E-5	4E-4
56	Barium-133	D, all compounds	2E+3	7E+2	3E-7	9E-10	2E-5	2E-4
56	Barium-135m	D, all compounds	3E+3	1E+4	5E-6	2E-8	4E-5	4E-4
56	Barium-139[2]	D, all compounds	1E+4	3E+4	1E-5	4E-8	2E-4	2E-3
56	Barium-140	D, all compounds	5E+2	1E+3	6E-7	2E-9	-	-
			LLI wall (6E+2)	-	-	-	8E-6	8E-5
56	Barium-141[2]	D, all compounds	2E+4	7E+4	3E-5	1E-7	3E-4	3E-3
56	Barium-142[2]	D, all compounds	5E+4	1E+5	6E-5	2E-7	7E-4	7E-3
57	Lanthanum-131[2]	D, all compounds except those given for W	5E+4	1E+5	5E-5	2E-7	6E-4	6E-3
		W, oxides and hydroxides	-	2E+5	7E-5	2E-7	-	-

58 FR 67657

58 FR 67657

Atomic No.	Radionuclide	Class	Table 1 Occupational Values Col. 1 Oral Ingestion ALI (μCi)	Table 1 Occupational Values Col. 2 Inhalation ALI (μCi)	Table 1 Occupational Values Col. 3 Inhalation DAC (μCi/ml)	Table 2 Effluent Concentrations Col. 1 Air (μCi/ml)	Table 2 Effluent Concentrations Col. 2 Water (μCi/ml)	Table 3 Releases to Sewers Monthly Average Concentration (μCi/ml)
57	Lanthanum-132	D, see ^{131}La	3E+3	1E+4	4E-6	1E-8	4E-5	4E-4
		W, see ^{131}La	-	1E+4	5E-6	2E-8	-	-
57	Lanthanum-135	D, see ^{131}La	4E+4	1E+5	4E-5	1E-7	5E-4	5E-3
		W, see ^{131}La	-	9E+4	4E-5	1E-7	-	-
57	Lanthanum-137	D, see ^{131}La	1E+4	6E+1	3E-8	-	2E-4	2E-3
				Liver				
			-	(7E+1)	-	1E-10	-	-
		W, see ^{131}La	-	3E+2	1E-7	-	-	-
				Liver				
			-	(3E+2)	-	4E-10	-	-
57	Lanthanum-138	D, see ^{131}La	9E+2	4E+0	1E-9	5E-12	1E-5	1E-4
		W, see ^{131}La	-	1E+1	6E-9	2E-11	-	-
57	Lanthanum-140	D, see ^{131}La	6E+2	1E+3	6E-7	2E-9	9E-6	9E-5
		W, see ^{131}La	-	1E+3	5E-7	2E-9	-	-
57	Lanthanum-141	D, see ^{131}La	4E+3	9E+3	4E-6	1E-8	5E-5	5E-4
		W, see ^{131}La	-	1E+4	5E-6	2E-8	-	-
57	Lanthanum-142[2]	D, see ^{131}La	8E+3	2E+4	9E-6	3E-8	1E-4	1E-3
		W, see ^{131}La	-	3E+4	1E-5	5E-8	-	-
57	Lanthanum-143[2]	D, see ^{131}La	4E+4	1E+5	4E-5	1E-7	-	-
			St. wall					
		W, see ^{131}La	(4E+4)	-	-	-	5E-4	5E-3
			-	9E+4	4E-5	1E-7	-	-
58	Cerium-134	W, all compounds except those given for Y	5E+2	7E+2	3E-7	1E-9	-	-
			LLI wall					
			(6E+2)	-	-	-	8E-6	8E-5
		Y, oxides, hydroxides, and fluorides	-	7E+2	3E-7	9E-10	-	-
58	Cerium-135	W, see ^{134}Ce	2E+3	4E+3	2E-6	5E-9	2E-5	2E-4
		Y, see ^{134}Ce	-	4E+3	1E-6	5E-9	-	-
58	Cerium-137m	W, see ^{134}Ce	2E+3	4E+3	2E-6	6E-9	-	-
			LLI wall					
		Y, see ^{134}Ce	(2E+3)	-	-	-	3E-5	3E-4
			-	4E+3	2E-6	5E-9	-	-
58	Cerium-137	W, see ^{134}Ce	5E+4	1E+5	6E-5	2E-7	7E-4	7E-3
		Y, see ^{134}Ce	-	1E+5	5E-5	2E-7	-	-
58	Cerium-139	W, see ^{134}Ce	5E+3	8E+2	3E-7	1E-9	7E-5	7E-4
		Y, see ^{134}Ce	-	7E+2	3E-7	9E-10	-	-
58	Cerium-141	W, see ^{134}Ce	2E+3	7E+2	3E-7	1E-9	-	-
			LLI wall					
		Y, see ^{134}Ce	(2E+3)	-	-	-	3E-5	3E-4
			-	6E+2	2E-7	8E-10	-	-
58	Cerium-143	W, see ^{134}Ce	1E+3	2E+3	8E-7	3E-9	-	-
			LLI wall					
		Y, see ^{134}Ce	(1E+3)	-	-	-	2E-5	2E-4
			-	2E+3	7E-7	2E-9	-	-

Atomic No.	Radionuclide	Class	Table 1 Occupational Values Col. 1 Oral Ingestion ALI (μCi)	Table 1 Occupational Values Col. 2 Inhalation ALI (μCi)	Table 1 Occupational Values Col. 3 Inhalation DAC (μCi/ml)	Table 2 Effluent Concentrations Col. 1 Air (μCi/ml)	Table 2 Effluent Concentrations Col. 2 Water (μCi/ml)	Table 3 Releases to Sewers Monthly Average Concentration (μCi/ml)
58	Cerium-144	W, see ^{134}Ce	2E+2	3E+1	1E-8	4E-11	-	-
			LLI wall (3E+2)	-	-	-	3E-6	3E-5
		Y, see ^{134}Ce	-	1E+1	6E-9	2E-11	-	-
59	Praseodymium-136[2]	W, all compounds except those given for Y	5E+4	2E+5	1E-4	3E-7	-	-
			St. wall (7E+4)	-	-	-	1E-3	1E-2
		Y, oxides, hydroxides, carbides, and fluorides	-	2E+5	9E-5	3E-7	-	-
59	Praseodymium-137[2]	W, see ^{136}Pr	4E+4	2E+5	6E-5	2E-7	5E-4	5E-3
		Y, see ^{136}Pr	-	1E+5	6E-5	2E-7	-	-
59	Praseodymium-138m	W, see ^{136}Pr	1E+4	5E+4	2E-5	8E-8	1E-4	1E-3
		Y, see ^{136}Pr	-	4E+4	2E-5	6E-8	-	-
59	Praseodymium-139	W, see ^{136}Pr	4E+4	1E+5	5E-5	2E-7	6E-4	6E-3
		Y, see ^{136}Pr	-	1E+5	5E-5	2E-7	-	-
59	Praseodymium-142m[2]	W, see ^{136}Pr	8E+4	2E+5	7E-5	2E-7	1E-3	1E-2
		Y, see ^{136}Pr	-	1E+5	6E-5	2E-7	-	-
59	Praseodymium-142	W, see ^{136}Pr	1E+3	2E+3	9E-7	3E-9	1E-5	1E-4
		Y, see ^{136}Pr	-	2E+3	8E-7	3E-9	-	-
59	Praseodymium-143	W, see ^{136}Pr	9E+2	8E+2	3E-7	1E-9	-	-
			LLI wall (1E+3)	-	-	-	2E-5	2E-4
		Y, see ^{136}Pr	-	7E+2	3E-7	9E-10	-	-
59	Praseodymium-144[2]	W, see ^{136}Pr	3E+4	1E+5	5E-5	2E-7	-	-
			St. wall (4E+4)	-	-	-	6E-4	6E-3
		Y, see ^{136}Pr	-	1E+5	5E-5	2E-7	-	-
59	Praseodymium-145	W, see ^{136}Pr	3E+3	9E+3	4E-6	1E-8	4E-5	4E-4
		Y, see ^{136}Pr	-	8E+3	3E-6	1E-8	-	-
59	Praseodymium-147[2]	W, see ^{136}Pr	5E+4	2E+5	8E-5	3E-7	-	-
			St. wall (8E+4)	-	-	-	1E-3	1E-2
		Y, see ^{136}Pr	-	2E+5	8E-5	3E-7	-	-
60	Neodymium-136[2]	W, all compounds except those given for Y	1E+4	6E+4	2E-5	8E-8	2E-4	2E-3
		Y, oxides, hydroxides, carbides, and fluorides	-	5E+4	2E-5	8E-8	-	-
60	Neodymium-138	W, see ^{136}Nd	2E+3	6E+3	3E-6	9E-9	3E-5	3E-4
		Y, see ^{136}Nd	-	5E+3	2E-6	7E-9	-	-
60	Neodymium-139m	W, see ^{136}Nd	5E+3	2E+4	7E-6	2E-8	7E-5	7E-4
		Y, see ^{136}Nd	-	1E+4	6E-6	2E-8	-	-

58 FR 67657

58 FR 67657

Atomic No.	Radionuclide	Class	Table 1 Occupational Values Col. 1 Oral Ingestion ALI (μCi)	Table 1 Occupational Values Col. 2 Inhalation ALI (μCi)	Table 1 Occupational Values Col. 3 Inhalation DAC (μCi/ml)	Table 2 Effluent Concentrations Col. 1 Air (μCi/ml)	Table 2 Effluent Concentrations Col. 2 Water (μCi/ml)	Table 3 Releases to Sewers Monthly Average Concentration (μCi/ml)
60	Neodymium-139[2]	W, see ^{136}Nd	9E+4	3E+5	1E-4	5E-7	1E-3	1E-2
		Y, see ^{136}Nd	-	3E+5	1E-4	4E-7	-	-
60	Neodymium-141	W, see ^{136}Nd	2E+5	7E+5	3E-4	1E-6	2E-3	2E-2
		Y, see ^{136}Nd	-	6E+5	3E-4	9E-7	-	-
60	Neodymium-147	W, see ^{136}Nd	1E+3 LLI wall (1E+3)	9E+2 -	4E-7 -	1E-9 -	- 2E-5	- 2E-4
		Y, see ^{136}Nd	-	8E+2	4E-7	1E-9	-	-
60	Neodymium-149[2]	W, see ^{136}Nd	1E+4	3E+4	1E-5	4E-8	1E-4	1E-3
		Y, see ^{136}Nd	-	2E+4	1E-5	3E-8	-	-
60	Neodymium-151[2]	W, see ^{136}Nd	7E+4	2E+5	8E-5	3E-7	9E-4	9E-3
		Y, see ^{136}Nd	-	2E+5	8E-5	3E-7	-	-
61	Promethium-141[2]	W, all compounds except those given for Y	5E+4 St. wall (6E+4)	2E+5 -	8E-5 -	3E-7 -	- 8E-4	- 8E-3
		Y, oxides, hydroxides, carbides, and fluorides	-	2E+5	7E-5	2E-7	-	-
61	Promethium-143	W, see ^{141}Pm	5E+3	6E+2	2E-7	8E-10	7E-5	7E-4
		Y, see ^{141}Pm	-	7E+2	3E-7	1E-9	-	-
61	Promethium-144	W, see ^{141}Pm	1E+3	1E+2	5E-8	2E-10	2E-5	2E-4
		Y, see ^{141}Pm	-	1E+2	5E-8	2E-10	-	-
61	Promethium-145	W, see ^{141}Pm	1E+4	2E+2 Bone surf (2E+2)	7E-8 -	- 3E-10	1E-4 -	1E-3 -
		Y, see ^{141}Pm	-	2E+2	8E-8	3E-10	-	-
61	Promethium-146	W, see ^{141}Pm	2E+3	5E+1	2E-8	7E-11	2E-5	2E-4
		Y, see ^{141}Pm	-	4E+1	2E-8	6E-11	-	-
61	Promethium-147	W, see ^{141}Pm	4E+3 LLI wall (5E+3)	1E+2 Bone surf (2E+2)	5E-8 -	- 3E-10	- 7E-5	- 7E-4
		Y, see ^{141}Pm	-	1E+2	6E-8	2E-10	-	-
61	Promethium-148m	W, see ^{141}Pm	7E+2	3E+2	1E-7	4E-10	1E-5	1E-4
		Y, see ^{141}Pm	-	3E+2	1E-7	5E-10	-	-
61	Promethium-148	W, see ^{141}Pm	4E+2 LLI wall (5E+2)	5E+2 -	2E-7 -	8E-10 -	- 7E-6	- 7E-5
		Y, see ^{141}Pm	-	5E+2	2E-7	7E-10	-	-
61	Promethium-149	W, see ^{141}Pm	1E+3 LLI wall (1E+3)	2E+3 -	8E-7 -	3E-9 -	- 2E-5	- 2E-4
		Y, see ^{141}Pm	-	2E+3	8E-7	2E-9	-	-
61	Promethium-150	W, see ^{141}Pm	5E+3	2E+4	8E-6	3E-8	7E-5	7E-4
		Y, see ^{141}Pm	-	2E+4	7E-6	2E-8	-	-
61	Promethium-151	W, see ^{141}Pm	2E+3	4E+3	1E-6	5E-9	2E-5	2E-4
		Y, see ^{141}Pm	-	3E+3	1E-6	4E-9	-	-

Atomic No.	Radionuclide	Class	Table 1 Occupational Values: Col. 1 Oral Ingestion ALI (μCi)	Table 1 Occupational Values: Col. 2 Inhalation ALI (μCi)	Table 1 Occupational Values: Col. 3 Inhalation DAC (μCi/ml)	Table 2 Effluent Concentrations: Col. 1 Air (μCi/ml)	Table 2 Effluent Concentrations: Col. 2 Water (μCi/ml)	Table 3 Releases to Sewers: Monthly Average Concentration (μCi/ml)
62	Samarium-141m[2]	W, all compounds	3E+4	1E+5	4E-5	1E-7	4E-4	4E-3
62	Samarium-141[2]	W, all compounds	5E+4 St. wall (6E+4)	2E+5 -	8E-5 -	2E-7 -	- 8E-4	- 8E-3
62	Samarium-142[2]	W, all compounds	8E+3	3E+4	1E-5	4E-8	1E-4	1E-3
62	Samarium-145	W, all compounds	6E+3	5E+2	2E-7	7E-10	8E-5	8E-4
62	Samarium-146	W, all compounds	1E+1 Bone surf (3E+1)	4E-2 Bone surf (6E-2)	1E-11 -	- 9E-14	- 3E-7	- 3E-6
62	Samarium-147	W, all compounds	2E+1 Bone surf (3E+1)	4E-2 Bone surf (7E-2)	2E-11 -	- 1E-13	- 4E-7	- 4E-6
62	Samarium-151	W, all compounds	1E+4 LLI wall (1E+4)	1E+2 Bone surf (2E+2)	4E-8 -	- 2E-10	- 2E-4	- 2E-3
62	Samarium-153	W, all compounds	2E+3 LLI wall (2E+3)	3E+3 -	1E-6 -	4E-9 -	- 3E-5	- 3E-4
62	Samarium-155[2]	W, all compounds	6E+4 St. wall (8E+4)	2E+5 -	9E-5 -	3E-7 -	- 1E-3	- 1E-2
62	Samarium-156	W, all compounds	5E+3	9E+3	4E-6	1E-8	7E-5	7E-4
63	Europium-145	W, all compounds	2E+3	2E+3	8E-7	3E-9	2E-5	2E-4
63	Europium-146	W, all compounds	1E+3	1E+3	5E-7	2E-9	1E-5	1E-4
63	Europium-147	W, all compounds	3E+3	2E+3	7E-7	2E-9	4E-5	4E-4
63	Europium-148	W, all compounds	1E+3	4E+2	1E-7	5E-10	1E-5	1E-4
63	Europium-149	W, all compounds	1E+4	3E+3	1E-6	4E-9	2E-4	2E-3
63	Europium-150 (12.62 h)	W, all compounds	3E+3	8E+3	4E-6	1E-8	4E-5	4E-4
63	Europium-150 (34.2 y)	W, all compounds	8E+2	2E+1	8E-9	3E-11	1E-5	1E-4
63	Europium-152m	W, all compounds	3E+3	6E+3	3E-6	9E-9	4E-5	4E-4
63	Europium-152	W, all compounds	8E+2	2E+1	1E-8	3E-11	1E-5	1E-4
63	Europium-154	W, all compounds	5E+2	2E+1	8E-9	3E-11	7E-6	7E-5
63	Europium-155	W, all compounds	4E+3 -	9E+1 Bone surf. (1E+2)	4E-8 -	- 2E-10	5E-5 -	5E-4 -
63	Europium-156	W, all compounds	6E+2	5E+2	2E-7	6E-10	8E-6	8E-5

58 FR 67657

Atomic No.	Radionuclide	Class	Table 1 Occupational Values Col. 1 Oral Ingestion ALI (μCi)	Table 1 Occupational Values Col. 2 Inhalation ALI (μCi)	Table 1 Occupational Values Col. 3 Inhalation DAC (μCi/ml)	Table 2 Effluent Concentrations Col. 1 Air (μCi/ml)	Table 2 Effluent Concentrations Col. 2 Water (μCi/ml)	Table 3 Releases to Sewers Monthly Average Concentration (μCi/ml)
63	Europium-157	W, all compounds	2E+3	5E+3	2E-6	7E-9	3E-5	3E-4
63	Europium-158[2]	W, all compounds	2E+4	6E+4	2E-5	8E-8	3E-4	3E-3
64	Gadolinium-145[2]	D, all compounds except those given for W	5E+4	2E+5	6E-5	2E-7	-	-
			St. wall (5E+4)	-	-	-	6E-4	6E-3
		W, oxides, hydroxides, and fluorides	-	2E+5	7E-5	2E-7	-	-
64	Gadolinium-146	D, see ^{145}Gd	1E+3	1E+2	5E-8	2E-10	2E-5	2E-4
		W, see ^{145}Gd	-	3E+2	1E-7	4E-10	-	-
64	Gadolinium-147	D, see ^{145}Gd	2E+3	4E+3	2E-6	6E-9	3E-5	3E-4
		W, see ^{145}Gd	-	4E+3	1E-6	5E-9	-	-
64	Gadolinium-148	D, see ^{145}Gd	1E+1 Bone surf (2E+1)	8E-3 Bone surf (2E-2)	3E-12	-	-	-
		W, see ^{145}Gd	-	3E-2	1E-11	2E-14	3E-7	3E-6
			-	Bone surf (6E-2)	-	8E-14	-	-
64	Gadolinium-149	D, see ^{145}Gd	3E+3	2E+3	9E-7	3E-9	4E-5	4E-4
		W, see ^{145}Gd	-	2E+3	1E-6	3E-9	-	-
64	Gadolinium-151	D, see ^{145}Gd	6E+3	4E+2	2E-7	-	9E-5	9E-4
			-	Bone surf (6E+2)	-	9E-10	-	-
		W, see ^{145}Gd	-	1E+3	5E-7	2E-9	-	-
64	Gadolinium-152	D, see ^{145}Gd	2E+1 Bone surf (3E+1)	1E-2 Bone surf (2E-2)	4E-12	-	-	-
		W, see ^{145}Gd	-	4E-2	2E-11	3E-14	4E-7	4E-6
			-	Bone surf (8E-2)	-	1E-13	-	-
64	Gadolinium-153	D, see ^{145}Gd	5E+3	1E+2 Bone surf (2E+2)	6E-8	-	6E-5	6E-4
		W, see ^{145}Gd	-	6E+2	- 2E-7	3E-10 8E-10	-	-
64	Gadolinium-159	D, see ^{145}Gd	3E+3	8E+3	3E-6	1E-8	4E-5	4E-4
		W, see ^{145}Gd	-	6E+3	2E-6	8E-9	-	-
65	Terbium-147[2]	W, all compounds	9E+3	3E+4	1E-5	5E-8	1E-4	1E-3
65	Terbium-149	W, all compounds	5E+3	7E+2	3E-7	1E-9	7E-5	7E-4
65	Terbium-150	W, all compounds	5E+3	2E+4	9E-6	3E-8	7E-5	7E-4
65	Terbium-151	W, all compounds	4E+3	9E+3	4E-6	1E-8	5E-5	5E-4
65	Terbium-153	W, all compounds	5E+3	7E+3	3E-6	1E-8	7E-5	7E-4
65	Terbium-154	W, all compounds	2E+3	4E+3	2E-6	6E-9	2E-5	2E-4
65	Terbium-155	W, all compounds	6E+3	8E+3	3E-6	1E-8	8E-5	8E-4
65	Terbium-156m (5.0 h)	W, all compounds	2E+4	3E+4	1E-5	4E-8	2E-4	2E-3

58 FR 67657

Atomic No.	Radionuclide	Class	Table 1 Occupational Values			Table 2 Effluent Concentrations		Table 3 Releases to Sewers
			Col. 1	Col. 2	Col. 3	Col. 1	Col. 2	
			Oral Ingestion	Inhalation				
			ALI (μCi)	ALI (μCi)	DAC (μCi/ml)	Air (μCi/ml)	Water (μCi/ml)	Monthly Average Concentration (μCi/ml)
65	Terbium-156m (24.4 h)	W, all compounds	7E+3	8E+3	3E-6	1E-8	1E-4	1E-3
65	Terbium-156	W, all compounds	1E+3	1E+3	6E-7	2E-9	1E-5	1E-4
65	Terbium-157	W, all compounds	5E+4	3E+2	1E-7	-	-	-
			LLI wall (5E+4)	Bone surf (6E+2)	-	8E-10	7E-4	7E-3
65	Terbium-158	W, all compounds	1E+3	2E+1	8E-9	3E-11	2E-5	2E-4
65	Terbium-160	W, all compounds	8E+2	2E+2	9E-8	3E-10	1E-5	1E-4
65	Terbium-161	W, all compounds	2E+3	2E+3	7E-7	2E-9	-	-
			LLI wall (2E+3)	-	-	-	3E-5	3E-4
66	Dysprosium-155	W, all compounds	9E+3	3E+4	1E-5	4E-8	1E-4	1E-3
66	Dysprosium-157	W, all compounds	2E+4	6E+4	3E-5	9E-8	3E-4	3E-3
66	Dysprosium-159	W, all compounds	1E+4	2E+3	1E-6	3E-9	2E-4	2E-3
66	Dysprosium-165	W, all compounds	1E+4	5E+4	2E-5	6E-8	2E-4	2E-3
66	Dysprosium-166	W, all compounds	6E+2	7E+2	3E-7	1E-9	-	-
			LLI wall (8E+2)	-	-	-	1E-5	1E-4
67	Holmium-155[2]	W, all compounds	4E+4	2E+5	6E-5	2E-7	6E-4	6E-3
67	Holmium-157[2]	W, all compounds	3E+5	1E+6	6E-4	2E-6	4E-3	4E-2
67	Holmium-159[2]	W, all compounds	2E+5	1E+6	4E-4	1E-6	3E-3	3E-2
67	Holmium-161	W, all compounds	1E+5	4E+5	2E-4	6E-7	1E-3	1E-2
67	Holmium-162m[2]	W, all compounds	5E+4	3E+5	1E-4	4E-7	7E-4	7E-3
67	Holmium-162[2]	W, all compounds	5E+5	2E+6	1E-3	3E-6	-	-
			St. wall (8E+5)	-	-	-	1E-2	1E-1
67	Holmium-164m[2]	W, all compounds	1E+5	3E+5	1E-4	4E-7	1E-3	1E-2
67	Holmium-164[2]	W, all compounds	2E+5	6E+5	3E-4	9E-7	-	-
			St. wall (2E+5)	-	-	-	3E-3	3E-2
67	Holmium-166m	W, all compounds	6E+2	7E+0	3E-9	9E-12	9E-6	9E-5
67	Holmium-166	W, all compounds	9E+2	2E+3	7E-7	2E-9	-	-
			LLI wall (9E+2)	-	-	-	1E-5	1E-4
67	Holmium-167	W, all compounds	2E+4	6E+4	2E-5	8E-8	2E-4	2E-3
68	Erbium-161	W, all compounds	2E+4	6E+4	3E-5	9E-8	2E-4	2E-3
68	Erbium-165	W, all compounds	6E+4	2E+5	8E-5	3E-7	9E-4	9E-3

58 FR 67657

Atomic No.	Radionuclide	Class	Table 1 Occupational Values: Col. 1 Oral Ingestion ALI (μCi)	Table 1: Col. 2 Inhalation ALI (μCi)	Table 1: Col. 3 Inhalation DAC (μCi/ml)	Table 2 Effluent Concentrations: Col. 1 Air (μCi/ml)	Table 2: Col. 2 Water (μCi/ml)	Table 3 Releases to Sewers: Monthly Average Concentration (μCi/ml)
68	Erbium-169	W, all compounds	3E+3 LLI wall (4E+3)	3E+3 -	1E-6 -	4E-9 -	- 5E-5	- 5E-4
68	Erbium-171	W, all compounds	4E+3	1E+4	4E-6	1E-8	5E-5	5E-4
68	Erbium-172	W, all compounds	1E+3 LLI wall (1E+3)	1E+3 -	6E-7 -	2E-9 -	- 2E-5	- 2E-4
69	Thulium-162[2]	W, all compounds	7E+4 St. wall (7E+4)	3E+5 -	1E-4 -	4E-7 -	- 1E-3	- 1E-2
69	Thulium-166	W, all compounds	4E+3	1E+4	6E-6	2E-8	6E-5	6E-4
69	Thulium-167	W, all compounds	2E+3 LLI wall (2E+3)	2E+3 -	8E-7 -	3E-9 -	- 3E-5	- 3E-4
69	Thulium-170	W, all compounds	8E+2 LLI wall (1E+3)	2E+2 -	9E-8 -	3E-10 -	- 1E-5	- 1E-4
69	Thulium-171	W, all compounds	1E+4 LLI wall (1E+4)	3E+2 Bone surf (6E+2)	1E-7 -	- 8E-10	- 2E-4	- 2E-3
69	Thulium-172	W, all compounds	7E+2 LLI wall (8E+2)	1E+3 -	5E-7 -	2E-9 -	- 1E-5	- 1E-4
69	Thulium-173	W, all compounds	4E+3	1E+4	5E-6	2E-8	6E-5	6E-4
69	Thulium-175[2]	W, all compounds	7E+4 St. wall (9E+4)	3E+5 -	1E-4 -	4E-7 -	- 1E-3	- 1E-2
70	Ytterbium-162[2]	W, all compounds except those given for Y	7E+4	3E+5	1E-4	4E-7	1E-3	1E-2
		Y, oxides, hydroxides, and fluorides	-	3E+5	1E-4	4E-7	-	-
70	Ytterbium-166	W, see ^{162}Yb Y, see ^{162}Yb	1E+3 -	2E+3 2E+3	8E-7 8E-7	3E-9 3E-9	2E-5 -	2E-4 -
70	Ytterbium-167[2]	W, see ^{162}Yb Y, see ^{162}Yb	3E+5 -	8E+5 7E+5	3E-4 3E-4	1E-6 1E-6	4E-3 -	4E-2 -
70	Ytterbium-169	W, see ^{162}Yb Y, see ^{162}Yb	2E+3 -	8E+2 7E+2	4E-7 3E-7	1E-9 1E-9	2E-5 -	2E-4 -
70	Ytterbium-175	W, see ^{162}Yb	3E+3 LLI wall (3E+3)	4E+3 -	1E-6 -	5E-9 -	- 4E-5	- 4E-4
		Y, see ^{162}Yb	-	3E+3	1E-6	5E-9	-	-
70	Ytterbium-177[2]	W, see ^{162}Yb Y, see ^{162}Yb	2E+4 -	5E+4 5E+4	2E-5 2E-5	7E-8 6E-8	2E-4 -	2E-3 -
70	Ytterbium-178[2]	W, see ^{162}Yb Y, see ^{162}Yb	1E+4 -	4E+4 4E+4	2E-5 2E-5	6E-8 5E-8	2E-4 -	2E-3 -

58 FR 67657

Atomic No.	Radionuclide	Class	Table 1 Occupational Values			Table 2 Effluent Concentrations		Table 3 Releases to Sewers
			Col. 1 Oral Ingestion ALI (μCi)	Col. 2 Inhalation ALI (μCi)	Col. 3 Inhalation DAC (μCi/ml)	Col. 1 Air (μCi/ml)	Col. 2 Water (μCi/ml)	Monthly Average Concentration (μCi/ml)
71	Lutetium-169	W, all compounds except those given for Y	3E+3	4E+3	2E-6	6E-9	3E-5	3E-4
		Y, oxides, hydroxides, and fluorides	-	4E+3	2E-6	6E-9	-	-
71	Lutetium-170	W, see ^{169}Lu	1E+3	2E+3	9E-7	3E-9	2E-5	2E-4
		Y, see ^{169}Lu	-	2E+3	8E-7	3E-9	-	-
71	Lutetium-171	W, see ^{169}Lu	2E+3	2E+3	8E-7	3E-9	3E-5	3E-4
		Y, see ^{169}Lu	-	2E+3	8E-7	3E-9	-	-
71	Lutetium-172	W, see ^{169}Lu	1E+3	1E+3	5E-7	2E-9	1E-5	1E-4
		Y, see ^{169}Lu	-	1E+3	5E-7	2E-9	-	-
71	Lutetium-173	W, see ^{169}Lu	5E+3	3E+2 Bone surf	1E-7	-	7E-5	7E-4
			-	(5E+2)	-	6E-10	-	-
		Y, see ^{169}Lu	-	3E+2	1E-7	4E-10	-	-
71	Lutetium-174m	W, see ^{169}Lu	2E+3 LLI wall	2E+2 Bone surf	1E-7	-	-	-
			(3E+3)	(3E+2)	-	5E-10	4E-5	4E-4
		Y, see ^{169}Lu	-	2E+2	9E-8	3E-10	-	-
71	Lutetium-174	W, see ^{169}Lu	5E+3	1E+2 Bone surf	5E-8	-	7E-5	7E-4
			-	(2E+2)	-	3E-10	-	-
		Y, see ^{169}Lu	-	2E+2	6E-8	2E-10	-	-
71	Lutetium-176m	W, see ^{169}Lu	8E+3	3E+4	1E-5	3E-8	1E-4	1E-3
		Y, see ^{169}Lu	-	2E+4	9E-6	3E-8	-	-
71	Lutetium-176	W, see ^{169}Lu	7E+2	5E+0 Bone surf	2E-9	-	1E-5	1E-4
			-	(1E+1)	-	2E-11	-	-
		Y, see ^{169}Lu	-	8E+0	3E-9	1E-11	-	-
71	Lutetium-177m	W, see ^{169}Lu	7E+2	1E+2 Bone surf	5E-8	-	1E-5	1E-4
			-	(1E+2)	-	2E-10	-	-
		Y, see ^{169}Lu	-	8E+1	3E-8	1E-10	-	-
71	Lutetium-177	W, see ^{169}Lu	2E+3 LLI wall	2E+3	9E-7	3E-9	-	-
			(3E+3)	-	-	-	4E-5	4E-4
		Y, see ^{169}Lu	-	2E+3	9E-7	3E-9	-	-
71	Lutetium-178m[2]	W, see ^{169}Lu	5E+4 St. wall	2E+5	8E-5	3E-7	-	-
			(6E+4)	-	-	-	8E-4	8E-3
		Y, see ^{169}Lu	-	2E+5	7E-5	2E-7	-	-
71	Lutetium-178[2]	W, see ^{169}Lu	4E+4 St. wall	1E+5	5E-5	2E-7	-	-
			(4E+4)	-	-	-	6E-4	6E-3
		Y, see ^{169}Lu	-	1E+5	5E-5	2E-7	-	-
71	Lutetium-179	W, see ^{169}Lu	6E+3	2E+4	8E-6	3E-8	9E-5	9E-4
		Y, see ^{169}Lu	-	2E+4	6E-6	3E-8	-	-

58 FR 67657

Atomic No.	Radionuclide	Class	Table 1 Occupational Values: Col. 1 Oral Ingestion ALI (μCi)	Table 1 Occupational Values: Col. 2 Inhalation ALI (μCi)	Table 1 Occupational Values: Col. 3 Inhalation DAC (μCi/ml)	Table 2 Effluent Concentrations: Col. 1 Air (μCi/ml)	Table 2 Effluent Concentrations: Col. 2 Water (μCi/ml)	Table 3 Releases to Sewers: Monthly Average Concentration (μCi/ml)
72	Hafnium-170	D, all compounds except those given for W	3E+3	6E+3	2E-6	8E-9	4E-5	4E-4
		W, oxides, hydroxides, carbides, and nitrates	-	5E+3	2E-6	6E-9	-	-
72	Hafnium-172	D, see ^{170}Hf	1E+3	9E+0 Bone surf	4E-9	-	2E-5	2E-4
			-	(2E+1)	-	3E-11	-	-
		W, see ^{170}Hf	-	4E+1	2E-8	-	-	-
			-	Bone surf (6E+1)	-	8E-11	-	-
72	Hafnium-173	D, see ^{170}Hf	5E+3	1E+4	5E-6	2E-8	7E-5	7E-4
		W, see ^{170}Hf	-	1E+4	5E-6	2E-8	-	-
72	Hafnium-175	D, see ^{170}Hf	3E+3	9E+2	4E-7	-	4E-5	4E-4
			-	Bone surf (1E+3)	-	1E-9	-	-
		W, see ^{170}Hf	-	1E+3	5E-7	2E-9	-	-
72	Hafnium-177m[2]	D, see ^{170}Hf	2E+4	6E+4	2E-5	8E-8	3E-4	3E-3
		W, see ^{170}Hf	-	9E+4	4E-5	1E-7	-	-
72	Hafnium-178m	D, see ^{170}Hf	3E+2	1E+0	5E-10	-	3E-6	3E-5
			-	Bone surf (2E+0)	-	3E-12	-	-
		W, see ^{170}Hf	-	5E+0	2E-9	-	-	-
			-	Bone surf (9E+0)	-	1E-11	-	-
72	Hafnium-179m	D, see ^{170}Hf	1E+3	3E+2	1E-7	-	1E-5	1E-4
			-	Bone surf (6E+2)	-	8E-10	-	-
		W, see ^{170}Hf	-	6E+2	3E-7	8E-10	-	-
72	Hafnium-180m	D, see ^{170}Hf	7E+3	2E+4	9E-6	3E-8	1E-4	1E-3
		W, see ^{170}Hf	-	3E+4	1E-5	4E-8	-	-
72	Hafnium-181	D, see ^{170}Hf	1E+3	2E+2	7E-8	-	2E-5	2E-4
			-	Bone surf (4E+2)	-	6E-10	-	-
		W, see ^{170}Hf	-	4E+2	2E-7	6E-10	-	-
72	Hafnium-182m[2]	D, see ^{170}Hf	4E+4	9E+4	4E-5	1E-7	5E-4	5E-3
		W, see ^{170}Hf	-	1E+5	6E-5	2E-7	-	-
72	Hafnium-182	D, see ^{170}Hf	2E+2 Bone surf (4E+2)	8E-1 Bone surf (2E+0)	3E-10	-	-	-
		W, see ^{170}Hf	-	3E+0	1E-9	2E-12	5E-6	5E-5
			-	Bone surf (7E+0)	-	1E-11	-	-
72	Hafnium-183[2]	D, see ^{170}Hf	2E+4	5E+4	2E-5	6E-8	3E-4	3E-3
		W, see ^{170}Hf	-	6E+4	2E-5	8E-8	-	-
72	Hafnium-184	D, see ^{170}Hf	2E+3	8E+3	3E-6	1E-8	3E-5	3E-4
		W, see ^{170}Hf	-	6E+3	3E-6	9E-9	-	-

58 FR 67657

Atomic No.	Radionuclide	Class	Table 1 Occupational Values: Col. 1 Oral Ingestion ALI (μCi)	Table 1 Occupational Values: Col. 2 Inhalation ALI (μCi)	Table 1 Occupational Values: Col. 3 Inhalation DAC (μCi/ml)	Table 2 Effluent Concentrations: Col. 1 Air (μCi/ml)	Table 2 Effluent Concentrations: Col. 2 Water (μCi/ml)	Table 3 Releases to Sewers: Monthly Average Concentration (μCi/ml)
73	Tantalum-172[2]	W, all compounds except those given for Y	4E+4	1E+5	5E-5	2E-7	5E-4	5E-3
		Y, elemental Ta, oxides, hydroxides, halides, carbides, nitrates, and nitrides	-	1E+5	4E-5	1E-7	-	-
73	Tantalum-173	W, see ^{172}Ta	7E+3	2E+4	8E-6	3E-8	9E-5	9E-4
		Y, see ^{172}Ta	-	2E+4	7E-6	2E-8	-	-
73	Tantalum-174[2]	W, see ^{172}Ta	3E+4	1E+5	4E-5	1E-7	4E-4	4E-3
		Y, see ^{172}Ta	-	9E+4	4E-5	1E-7	-	-
73	Tantalum-175	W, see ^{172}Ta	6E+3	2E+4	7E-6	2E-8	8E-5	8E-4
		Y, see ^{172}Ta	-	1E+4	6E-6	2E-8	-	-
73	Tantalum-176	W, see ^{172}Ta	4E+3	1E+4	5E-6	2E-8	5E-5	5E-4
		Y, see ^{172}Ta	-	1E+4	5E-6	2E-8	-	-
73	Tantalum-177	W, see ^{172}Ta	1E+4	2E+4	8E-6	3E-8	2E-4	2E-3
		Y, see ^{172}Ta	-	2E+4	7E-6	2E-8	-	-
73	Tantalum-178	W, see ^{172}Ta	2E+4	9E+4	4E-5	1E-7	2E-4	2E-3
		Y, see ^{172}Ta	-	7E+4	3E-5	1E-7	-	-
73	Tantalum-179	W, see ^{172}Ta	2E+4	5E+3	2E-6	8E-9	3E-4	3E-3
		Y, see ^{172}Ta	-	9E+2	4E-7	1E-9	-	-
73	Tantalum-180m	W, see ^{172}Ta	2E+4	7E+4	3E-5	9E-8	3E-4	3E-3
		Y, see ^{172}Ta	-	6E+4	2E-5	8E-8	-	-
73	Tantalum-180	W, see ^{172}Ta	1E+3	4E+2	2E-7	6E-10	2E-5	2E-4
		Y, see ^{172}Ta	-	2E+1	1E-8	3E-11	-	-
73	Tantalum-182m[2]	W, see ^{172}Ta	2E+5 St. wall (2E+5)	5E+5	2E-4	8E-7	-	-
		Y, see ^{172}Ta	-	4E+5	2E-4	6E-7	3E-3	3E-2
73	Tantalum-182	W, see ^{172}Ta	8E+2	3E+2	1E-7	5E-10	1E-5	1E-4
		Y, see ^{172}Ta	-	1E+2	6E-8	2E-10	-	-
73	Tantalum-183	W, see ^{172}Ta	9E+2 LLI wall (1E+3)	1E+3	5E-7	2E-9	-	-
		Y, see ^{172}Ta	-	1E+3	4E-7	1E-9	2E-5	2E-4
73	Tantalum-184	W, see ^{172}Ta	2E+3	5E+3	2E-6	8E-9	3E-5	3E-4
		Y, see ^{172}Ta	-	5E+3	2E-6	7E-9	-	-
73	Tantalum-185[2]	W, see ^{172}Ta	3E+4	7E+4	3E-5	1E-7	4E-4	4E-3
		Y, see ^{172}Ta	-	6E+4	3E-5	9E-8	-	-
73	Tantalum-186[2]	W, see ^{172}Ta	5E+4 St. wall (7E+4)	2E+5	1E-4	3E-7	-	-
		Y, see ^{172}Ta	-	2E+5	9E-5	3E-7	1E-3	1E-2
74	Tungsten-176	D, all compounds	1E+4	5E+4	2E-5	7E-8	1E-4	1E-3
74	Tungsten-177	D, all compounds	2E+4	9E+4	4E-5	1E-7	3E-4	3E-3

58 FR 67657

Atomic No.	Radionuclide	Class	Table 1 Occupational Values Col. 1 Oral Ingestion ALI (μCi)	Table 1 Occupational Values Col. 2 Inhalation ALI (μCi)	Table 1 Occupational Values Col. 3 Inhalation DAC (μCi/ml)	Table 2 Effluent Concentrations Col. 1 Air (μCi/ml)	Table 2 Effluent Concentrations Col. 2 Water (μCi/ml)	Table 3 Releases to Sewers Monthly Average Concentration (μCi/ml)
74	Tungsten-178	D, all compounds	5E+3	2E+4	8E-6	3E-8	7E-5	7E-4
74	Tungsten-179[2]	D, all compounds	5E+5	2E+6	7E-4	2E-6	7E-3	7E-2
74	Tungsten-181	D, all compounds	2E+4	3E+4	1E-5	5E-8	2E-4	2E-3
74	Tungsten-185	D, all compounds	2E+3	7E+3	3E-6	9E-9	-	-
			LLI wall (3E+3)	-	-	-	4E-5	4E-4
74	Tungsten-187	D, all compounds	2E+3	9E+3	4E-6	1E-8	3E-5	3E-4
74	Tungsten-188	D, all compounds	4E+2	1E+3	5E-7	2E-9	-	-
			LLI wall (5E+2)	-	-	-	7E-6	7E-5
75	Rhenium-177[2]	D, all compounds except those given for W	9E+4	3E+5	1E-4	4E-7	-	-
			St. wall (1E+5)	-	-	-	2E-3	2E-2
		W, oxides, hydroxides, and nitrates	-	4E+5	1E-4	5E-7	-	-
75	Rhenium-178[2]	D, see ^{177}Re	7E+4	3E+5	1E-4	4E-7	-	-
			St. wall (1E+5)	-	-	-	1E-3	1E-2
		W, see ^{177}Re	-	3E+5	1E-4	4E-7	-	-
75	Rhenium-181	D, see ^{177}Re	5E+3	9E+3	4E-6	1E-8	7E-5	7E-4
		W, see ^{177}Re	-	9E+3	4E-6	1E-8	-	-
75	Rhenium-182 (12.7 h)	D, see ^{177}Re	7E+3	1E+4	5E-6	2E-8	9E-5	9E-4
		W, see ^{177}Re	-	2E+4	6E-6	2E-8	-	-
75	Rhenium-182 (64.0 h)	D, see ^{177}Re	1E+3	2E+3	1E-6	3E-9	2E-5	2E-4
		W, see ^{177}Re	-	2E+3	9E-7	3E-9	-	-
75	Rhenium-184m	D, see ^{177}Re	2E+3	3E+3	1E-6	4E-9	3E-5	3E-4
		W, see ^{177}Re	-	4E+2	2E-7	6E-10	-	-
75	Rhenium-184	D, see ^{177}Re	2E+3	4E+3	1E-6	5E-9	3E-5	3E-4
		W, see ^{177}Re	-	1E+3	6E-7	2E-9	-	-
75	Rhenium-186m	D, see ^{177}Re	1E+3	2E+3	7E-7	-	-	-
			St. wall (2E+3)	St. wall (2E+3)	-	3E-9	2E-5	2E-4
		W, see ^{177}Re	-	2E+2	6E-8	2E-10	-	-
75	Rhenium-186	D, see ^{177}Re	2E+3	3E+3	1E-6	4E-9	3E-5	3E-4
		W, see ^{177}Re	-	2E+3	7E-7	2E-9	-	-
75	Rhenium-187	D, see ^{177}Re	6E+5	8E+5	4E-4	-	8E-3	8E-2
			-	St. wall (9E+5)	-	1E-6	-	-
		W, see ^{177}Re	-	1E+5	4E-5	1E-7	-	-
75	Rhenium-188m[2]	D, see ^{177}Re	8E+4	1E+5	6E-5	2E-7	1E-3	1E-2
		W, see ^{177}Re	-	1E+5	6E-5	2E-7	-	-
75	Rhenium-188	D, see ^{177}Re	2E+3	3E+3	1E-6	4E-9	2E-5	2E-4
		W, see ^{177}Re	-	3E+3	1E-6	4E-9	-	-

58 FR 67657

Atomic No.	Radionuclide	Class	Table 1 Occupational Values: Col. 1 Oral Ingestion ALI (μCi)	Table 1 Occupational Values: Col. 2 Inhalation ALI (μCi)	Table 1 Occupational Values: Col. 3 Inhalation DAC (μCi/ml)	Table 2 Effluent Concentrations: Col. 1 Air (μCi/ml)	Table 2 Effluent Concentrations: Col. 2 Water (μCi/ml)	Table 3 Releases to Sewers: Monthly Average Concentration (μCi/ml)
75	Rhenium-189	D, see ^{177}Re	3E+3	5E+3	2E-6	7E-9	4E-5	4E-4
		W, see ^{177}Re	-	4E+3	2E-6	6E-9	-	-
76	Osmium-180[2]	D, all compounds except those given for W and Y	1E+5	4E+5	2E-4	5E-7	1E-3	1E-2
		W, halides and nitrates	-	5E+5	2E-4	7E-7	-	-
		Y, oxides and hydroxides	-	5E+5	2E-4	6E-7	-	-
76	Osmium-181[2]	D, see ^{180}Os	1E+4	4E+4	2E-5	6E-8	2E-4	2E-3
		W, see ^{180}Os	-	5E+4	2E-5	6E-8	-	-
		Y, see ^{180}Os	-	4E+4	2E-5	6E-8	-	-
76	Osmium-182	D, see ^{180}Os	2E+3	6E+3	2E-6	8E-9	3E-5	3E-4
		W, see ^{180}Os	-	4E+3	2E-6	6E-9	-	-
		Y, see ^{180}Os	-	4E+3	2E-6	6E-9	-	-
76	Osmium-185	D, see ^{180}Os	2E+3	5E+2	2E-7	7E-10	3E-5	3E-4
		W, see ^{180}Os	-	8E+2	3E-7	1E-9	-	-
		Y, see ^{180}Os	-	8E+2	3E-7	1E-9	-	-
76	Osmium-189m	D, see ^{180}Os	8E+4	2E+5	1E-4	3E-7	1E-3	1E-2
		W, see ^{180}Os	-	2E+5	9E-5	3E-7	-	-
		Y, see ^{180}Os	-	2E+5	7E-5	2E-7	-	-
76	Osmium-191m	D, see ^{180}Os	1E+4	3E+4	1E-5	4E-8	2E-4	2E-3
		W, see ^{180}Os	-	2E+4	8E-6	3E-8	-	-
		Y, see ^{180}Os	-	2E+4	7E-6	2E-8	-	-
76	Osmium-191	D, see ^{180}Os	2E+3	2E+3	9E-7	3E-9	-	-
			LLI wall (3E+3)	-	-	-	3E-5	3E-4
		W, see ^{180}Os	-	2E+3	7E-7	2E-9	-	-
		Y, see ^{180}Os	-	1E+3	6E-7	2E-9	-	-
76	Osmium-193	D, see ^{180}Os	2E+3	5E+3	2E-6	6E-9	-	-
			LLI wall (2E+3)	-	-	-	2E-5	2E-4
		W, see ^{180}Os	-	3E+3	1E-6	4E-9	-	-
		Y, see ^{180}Os	-	3E+3	1E-6	4E-9	-	-
76	Osmium-194	D, see ^{180}Os	4E+2	4E+1	2E-8	6E-11	-	-
			LLI wall (6E+2)	-	-	-	8E-6	8E-5
		W, see ^{180}Os	-	6E+1	2E-8	8E-11	-	-
		Y, see ^{180}Os	-	8E+0	3E-9	1E-11	-	-
77	Iridium-182[2]	D, all compounds except those given for W and Y	4E+4	1E+5	6E-5	2E-7	-	-
			St. wall (4E+4)	-	-	-	6E-4	6E-3
		W, halides, nitrates, and metallic iridium	-	2E+5	6E-5	2E-7	-	-
		Y, oxides and hydroxides	-	1E+5	5E-5	2E-7	-	-
77	Iridium-184	D, see ^{182}Ir	8E+3	2E+4	1E-5	3E-8	1E-4	1E-3
		W, see ^{182}Ir	-	3E+4	1E-5	5E-8	-	-
		Y, see ^{182}Ir	-	3E+4	1E-5	4E-8	-	-

58 FR 67657

Atomic No.	Radionuclide	Class	Table 1 Occupational Values Col. 1 Oral Ingestion ALI (μCi)	Table 1 Occupational Values Col. 2 Inhalation ALI (μCi)	Table 1 Occupational Values Col. 3 Inhalation DAC (μCi/ml)	Table 2 Effluent Concentrations Col. 1 Air (μCi/ml)	Table 2 Effluent Concentrations Col. 2 Water (μCi/ml)	Table 3 Releases to Sewers Monthly Average Concentration (μCi/ml)
77	Iridium-185	D, see ^{182}Ir	5E+3	1E+4	5E-6	2E-8	7E-5	7E-4
		W, see ^{182}Ir	-	1E+4	5E-6	2E-8	-	-
		Y, see ^{182}Ir	-	1E+4	4E-6	1E-8	-	-
77	Iridium-186	D, see ^{182}Ir	2E+3	8E+3	3E-6	1E-8	3E-5	3E-4
		W, see ^{182}Ir	-	6E+3	3E-6	9E-9	-	-
		Y, see ^{182}Ir	-	6E+3	2E-6	8E-9	-	-
77	Iridium-187	D, see ^{182}Ir	1E+4	3E+4	1E-5	5E-8	1E-4	1E-3
		W, see ^{182}Ir	-	3E+4	1E-5	4E-8	-	-
		Y, see ^{182}Ir	-	3E+4	1E-5	4E-8	-	-
77	Iridium-188	D, see ^{182}Ir	2E+3	5E+3	2E-6	6E-9	3E-5	3E-4
		W, see ^{182}Ir	-	4E+3	1E-6	5E-9	-	-
		Y, see ^{182}Ir	-	3E+3	1E-6	5E-9	-	-
77	Iridium-189	D, see ^{182}Ir	5E+3	5E+3	2E-6	7E-9	-	-
			LLI wall (5E+3)	-	-	-	7E-5	7E-4
		W, see ^{182}Ir	-	4E+3	2E-6	5E-9	-	-
		Y, see ^{182}Ir	-	4E+3	1E-6	5E-9	-	-
77	Iridium-190m[2]	D, see ^{182}Ir	2E+5	2E+5	8E-5	3E-7	2E-3	2E-2
		W, see ^{182}Ir	-	2E+5	9E-5	3E-7	-	-
		Y, see ^{182}Ir	-	2E+5	8E-5	3E-7	-	-
77	Iridium-190	D, see ^{182}Ir	1E+3	9E+2	4E-7	1E-9	1E-5	1E-4
		W, see ^{182}Ir	-	1E+3	4E-7	1E-9	-	-
		Y, see ^{182}Ir	-	9E+2	4E-7	1E-9	-	-
77	Iridium-192m	D, see ^{182}Ir	3E+3	9E+1	4E-8	1E-10	4E-5	4E-4
		W, see ^{182}Ir	-	2E+2	9E-8	3E-10	-	-
		Y, see ^{182}Ir	-	2E+1	6E-9	2E-11	-	-
77	Iridium-192	D, see ^{182}Ir	9E+2	3E+2	1E-7	4E-10	1E-5	1E-4
		W, see ^{182}Ir	-	4E+2	2E-7	6E-10	-	-
		Y, see ^{182}Ir	-	2E+2	9E-8	3E-10	-	-
77	Iridium-194m	D, see ^{182}Ir	6E+2	9E+1	4E-8	1E-10	9E-6	9E-5
		W, see ^{182}Ir	-	2E+2	7E-8	2E-10	-	-
		Y, see ^{182}Ir	-	1E+2	4E-8	1E-10	-	-
77	Iridium-194	D, see ^{182}Ir	1E+3	3E+3	1E-6	4E-9	1E-5	1E-4
		W, see ^{182}Ir	-	2E+3	9E-7	3E-9	-	-
		Y, see ^{182}Ir	-	2E+3	8E-7	3E-9	-	-
77	Iridium-195m	D, see ^{182}Ir	8E+3	2E+4	1E-5	3E-8	1E-4	1E-3
		W, see ^{182}Ir	-	3E+4	1E-5	4E-8	-	-
		Y, see ^{182}Ir	-	2E+4	9E-6	3E-8	-	-
77	Iridium-195	D, see ^{182}Ir	1E+4	4E+4	2E-5	6E-8	2E-4	2E-3
		W, see ^{182}Ir	-	5E+4	2E-5	7E-8	-	-
		Y, see ^{182}Ir	-	4E+4	2E-5	6E-8	-	-
78	Platinum-186	D, all compounds	1E+4	4E+4	2E-5	5E-8	2E-4	2E-3
78	Platinum-188	D, all compounds	2E+3	2E+3	7E-7	2E-9	2E-5	2E-4
78	Platinum-189	D, all compounds	1E+4	3E+4	1E-5	4E-8	1E-4	1E-3
78	Platinum-191	D, all compounds	4E+3	8E+3	4E-6	1E-8	5E-5	5E-4

58 FR 67657

Atomic No.	Radionuclide	Class	Table 1 Occupational Values Col. 1 Oral Ingestion ALI (μCi)	Table 1 Occupational Values Col. 2 Inhalation ALI (μCi)	Table 1 Occupational Values Col. 3 Inhalation DAC (μCi/ml)	Table 2 Effluent Concentrations Col. 1 Air (μCi/ml)	Table 2 Effluent Concentrations Col. 2 Water (μCi/ml)	Table 3 Releases to Sewers Monthly Average Concentration (μCi/ml)
78	Platinum-193m	D, all compounds	3E+3 LLI wall (3E+4)	6E+3 -	3E-6 -	8E-9 -	- 4E-5	- 4E-4
78	Platinum-193	D, all compounds	4E+4 LLI wall (5E+4)	2E+4 -	1E-5 -	3E-8 -	- 6E-4	- 6E-3
78	Platinum-195m	D, all compounds	2E+3 LLI wall (2E+3)	4E+3 -	2E-6 -	6E-9 -	- 3E-5	- 3E-4
78	Platinum-197m[2]	D, all compounds	2E+4	4E+4	2E-5	6E-8	2E-4	2E-3
78	Platinum-197	D, all compounds	3E+3	1E+4	4E-6	1E-8	4E-5	4E-4
78	Platinum-199[2]	D, all compounds	5E+4	1E+5	6E-5	2E-7	7E-4	7E-3
78	Platinum-200	D, all compounds	1E+3	3E+3	1E-6	5E-9	2E-5	2E-4
79	Gold-193	D, all compounds except those given for W and Y	9E+3	3E+4	1E-5	4E-8	1E-4	1E-3
		W, halides and nitrates	-	2E+4	9E-6	3E-8	-	-
		Y, oxides and hydroxides	-	2E+4	8E-6	3E-8	-	-
79	Gold-194	D, see ^{193}Au	3E+3	8E+3	3E-6	1E-8	4E-5	4E-4
		W, see ^{193}Au	-	5E+3	2E-6	8E-9	-	-
		Y, see ^{193}Au	-	5E+3	2E-6	7E-9	-	-
79	Gold-195	D, see ^{193}Au	5E+3	1E+4	5E-6	2E-8	7E-5	7E-4
		W, see ^{193}Au	-	1E+3	6E-7	2E-9	-	-
		Y, see ^{193}Au	-	4E+2	2E-7	6E-10	-	-
79	Gold-198m	D, see ^{193}Au	1E+3	3E+3	1E-6	4E-9	1E-5	1E-4
		W, see ^{193}Au	-	1E+3	5E-7	2E-9	-	-
		Y, see ^{193}Au	-	1E+3	5E-7	2E-9	-	-
79	Gold-198	D, see ^{193}Au	1E+3	4E+3	2E-6	5E-9	2E-5	2E-4
		W, see ^{193}Au	-	2E+3	8E-7	3E-9	-	-
		Y, see ^{193}Au	-	2E+3	7E-7	2E-9	-	-
79	Gold-199	D, see ^{193}Au	3E+3 LLI wall (3E+3)	9E+3 -	4E-6 -	1E-8 -	- 4E-5	- 4E-4
		W, see ^{193}Au	-	4E+3	2E-6	6E-9	-	-
		Y, see ^{193}Au	-	4E+3	2E-6	5E-9	-	-
79	Gold-200m	D, see ^{193}Au	1E+3	4E+3	1E-6	5E-9	2E-5	2E-4
		W, see ^{193}Au	-	3E+3	1E-6	4E-9	-	-
		Y, see ^{193}Au	-	2E+4	1E-6	3E-9	-	-
79	Gold-200[2]	D, see ^{193}Au	3E+4	6E+4	3E-5	9E-8	4E-4	4E-3
		W, see ^{193}Au	-	8E+4	3E-5	1E-7	-	-
		Y, see ^{193}Au	-	7E+4	3E-5	1E-7	-	-
79	Gold-201[2]	D, see ^{193}Au	7E+4 St. wall (9E+4)	2E+5 -	9E-5 -	3E-7 -	- 1E-3	- 1E-2
		W, see ^{193}Au	-	2E+5	1E-4	3E-7	-	-
		Y, see ^{193}Au	-	2E+5	9E-5	3E-7	-	-

58 FR 67657

58 FR 67857

Atomic No.	Radionuclide	Class	Table 1 Occupational Values: Col. 1 Oral Ingestion ALI (μCi)	Table 1 Occupational Values: Col. 2 Inhalation ALI (μCi)	Table 1 Occupational Values: Col. 3 Inhalation DAC (μCi/ml)	Table 2 Effluent Concentrations: Col. 1 Air (μCi/ml)	Table 2 Effluent Concentrations: Col. 2 Water (μCi/ml)	Table 3 Releases to Sewers: Monthly Average Concentration (μCi/ml)
80	Mercury-193m	Vapor	-	8E+3	4E-6	1E-8	-	-
		Organic D	4E+3	1E+4	5E-6	2E-8	6E-5	6E-4
		D, sulfates	3E+3	9E+3	4E-6	1E-8	4E-5	4E-4
		W, oxides, hydroxides, halides, nitrates, and sulfides	-	8E+3	3E-6	1E-8	-	-
80	Mercury-193	Vapor	-	3E+4	1E-5	4E-8	-	-
		Organic D	2E+4	6E+4	3E-5	9E-8	3E-4	3E-3
		D, see ^{193m}Hg	2E+4	4E+4	2E-5	6E-8	2E-4	2E-3
		W, see ^{193m}Hg	-	4E+4	2E-5	6E-8	-	-
80	Mercury-194	Vapor	-	3E+1	1E-8	4E-11	-	-
		Organic D	2E+1	3E+2	1E-8	4E-11	2E-7	2E-6
		D, see ^{193m}Hg	8E+2	4E+1	2E-8	6E-11	1E-5	1E-4
		W, see ^{193m}Hg	-	1E+2	5E-8	2E-10	-	-
80	Mercury-195m	Vapor	-	4E+3	2E-6	6E-9	-	-
		Organic D	3E+3	6E+3	3E-6	8E-9	4E-5	4E-4
		D, see ^{193m}Hg	2E+3	5E+3	2E-6	7E-9	3E-5	3E-4
		W, see ^{193m}Hg	-	4E+3	2E-6	5E-9	-	-
80	Mercury-195	Vapor	-	3E+4	1E-5	4E-8	-	-
		Organic D	2E+4	5E+4	2E-5	6E-8	2E-4	2E-3
		D, see ^{193m}Hg	1E+4	4E+4	1E-5	5E-8	2E-4	2E-3
		W, see ^{193m}Hg	-	3E+4	1E-5	5E-8	-	-
80	Mercury-197m	Vapor	-	5E+3	2E-6	7E-9	-	-
		Organic D	4E+3	9E+3	4E-6	1E-8	5E-5	5E-4
		D, see ^{193m}Hg	3E+3	7E+3	3E-6	1E-8	4E-5	4E-4
		W, see ^{193m}Hg	-	5E+3	2E-6	7E-9	-	-
80	Mercury-197	Vapor	-	8E+3	4E-6	1E-8	-	-
		Organic D	7E+3	1E+4	6E-6	2E-8	9E-5	9E-4
		D, see ^{193m}Hg	6E+3	1E+4	5E-6	2E-8	8E-5	8E-4
		W, see ^{193m}Hg	-	9E+3	4E-6	1E-8	-	-
80	Mercury-199m[2]	Vapor	-	8E+4	3E-5	1E-7	-	-
		Organic D	6E+4	2E+5	7E-5	2E-7	-	-
			St. wall (1E+5)	-	-	-	1E-3	1E-2
		D, see ^{193m}Hg	6E+4	1E+5	6E-5	2E-7	8E-4	8E-3
		W, see ^{193m}Hg	-	2E+5	7E-5	2E-7	-	-
80	Mercury-203	Vapor	-	8E+2	4E-7	1E-9	-	-
		Organic D	5E+2	8E+2	3E-7	1E-9	7E-6	7E-5
		D, see ^{193m}Hg	2E+3	1E+3	5E-7	2E-9	3E-5	3E-4
		W, see ^{193m}Hg	-	1E+3	5E-7	2E-9	-	-
81	Thallium-194m[2]	D, all compounds	5E+4	2E+5	6E-5	2E-7	-	-
			St. wall (7E+4)	-	-	-	1E-3	1E-2

Atomic No.	Radionuclide	Class	Table 1 Occupational Values: Col. 1 Oral Ingestion ALI (μCi)	Table 1 Occupational Values: Col. 2 Inhalation ALI (μCi)	Table 1 Occupational Values: Col. 3 Inhalation DAC (μCi/ml)	Table 2 Effluent Concentrations: Col. 1 Air (μCi/ml)	Table 2 Effluent Concentrations: Col. 2 Water (μCi/ml)	Table 3 Releases to Sewers: Monthly Average Concentration (μCi/ml)
81	Thallium-194[2]	D, all compounds	3E+5	6E+5	2E-4	8E-7	-	-
			St. wall (3E+5)	-	-	-	4E-3	4E-2
81	Thallium-195[2]	D, all compounds	6E+4	1E+5	5E-5	2E-7	9E-4	9E-3
81	Thallium-197	D, all compounds	7E+4	1E+5	5E-5	2E-7	1E-3	1E-2
81	Thallium-198m[2]	D, all compounds	3E+4	5E+4	2E-5	8E-8	4E-4	4E-3
81	Thallium-198	D, all compounds	2E+4	3E+4	1E-5	5E-8	3E-4	3E-3
81	Thallium-199	D, all compounds	6E+4	8E+4	4E-5	1E-7	9E-4	9E-3
81	Thallium-200	D, all compounds	8E+3	1E+4	5E-6	2E-8	1E-4	1E-3
81	Thallium-201	D, all compounds	2E+4	2E+4	9E-6	3E-8	2E-4	2E-3
81	Thallium-202	D, all compounds	4E+3	5E+3	2E-6	7E-9	5E-5	5E-4
81	Thallium-204	D, all compounds	2E+3	2E+3	9E-7	3E-9	2E-5	2E-4
82	Lead-195m[2]	D, all compounds	6E+4	2E+5	8E-5	3E-7	8E-4	8E-3
82	Lead-198	D, all compounds	3E+4	6E+4	3E-5	9E-8	4E-4	4E-3
82	Lead-199[2]	D, all compounds	2E+4	7E+4	3E-5	1E-7	3E-4	3E-3
82	Lead-200	D, all compounds	3E+3	6E+3	3E-6	9E-9	4E-5	4E-4
82	Lead-201	D, all compounds	7E+3	2E+4	8E-6	3E-8	1E-4	1E-3
82	Lead-202m	D, all compounds	9E+3	3E+4	1E-5	4E-8	1E-4	1E-3
82	Lead-202	D, all compounds	1E+2	5E+1	2E-8	7E-11	2E-6	2E-5
82	Lead-203	D, all compounds	5E+3	9E+3	4E-6	1E-8	7E-5	7E-4
82	Lead-205	D, all compounds	4E+3	1E+3	6E-7	2E-9	5E-5	5E-4
82	Lead-209	D, all compounds	2E+4	6E+4	2E-5	8E-8	3E-4	3E-3
82	Lead-210	D, all compounds	6E-1	2E-1	1E-10	-	-	-
			Bone surf (1E+0)	Bone surf (4E-1)	-	6E-13	1E-8	1E-7
82	Lead-211[2]	D, all compounds	1E+4	6E+2	3E-7	9E-10	2E-4	2E-3
82	Lead-212	D, all compounds	8E+1	3E+1	1E-8	5E-11	-	-
			Bone surf (1E+2)	-	-	-	2E-6	2E-5
82	Lead-214[2]	D, all compounds	9E+3	8E+2	3E-7	1E-9	1E-4	1E-3
83	Bismuth-200[2]	D, nitrates	3E+4	8E+4	4E-5	1E-7	4E-4	4E-3
		W, all other compounds	-	1E+5	4E-5	1E-7	-	-
83	Bismuth-201[2]	D, see $^{200}_{83}Bi$	1E+4	3E+4	1E-5	4E-8	2E-4	2E-3
		W, see $^{200}_{83}Bi$	-	4E+4	2E-5	5E-8	-	-
83	Bismuth-202[2]	D, see $^{200}_{83}Bi$	1E+4	4E+4	2E-5	6E-8	2E-4	2E-3
		W, see $^{200}_{83}Bi$	-	8E+4	3E-5	1E-7	-	-

58 FR 67657

Atomic No.	Radionuclide	Class	Table 1 Occupational Values Col. 1 Oral Ingestion ALI (μCi)	Table 1 Occupational Values Col. 2 Inhalation ALI (μCi)	Table 1 Occupational Values Col. 3 Inhalation DAC (μCi/ml)	Table 2 Effluent Concentrations Col. 1 Air (μCi/ml)	Table 2 Effluent Concentrations Col. 2 Water (μCi/ml)	Table 3 Releases to Sewers Monthly Average Concentration (μCi/ml)
83	Bismuth-203	D, see ^{200}Bi	2E+3	7E+3	3E-6	9E-9	3E-5	3E-4
		W, see ^{200}Bi	-	6E+3	3E-6	9E-9	-	-
83	Bismuth-205	D, see ^{200}Bi	1E+3	3E+3	1E-6	3E-9	2E-5	2E-4
		W, see ^{200}Bi	-	1E+3	5E-7	2E-9	-	-
83	Bismuth-206	D, see ^{200}Bi	6E+2	1E+3	6E-7	2E-9	9E-6	9E-5
		W, see ^{200}Bi	-	9E+2	4E-7	1E-9	-	-
83	Bismuth-207	D, see ^{200}Bi	1E+3	2E+3	7E-7	2E-9	1E-5	1E-4
		W, see ^{200}Bi	-	4E+2	1E-7	5E-10	-	-
83	Bismuth-210m	D, see ^{200}Bi	4E+1 Kidneys (6E+1)	5E+0 Kidneys (6E+0)	2E-9	-	-	-
		W, see ^{200}Bi	-	7E-1	3E-10	9E-12 9E-13	8E-7 -	8E-6 -
83	Bismuth-210	D, see ^{200}Bi	8E+2	2E+2 Kidneys (4E+2)	1E-7	- 5E-10	1E-5 -	1E-4 -
		W, see ^{200}Bi	-	3E+1	1E-8	4E-11	-	-
83	Bismuth-212[2]	D, see ^{200}Bi	5E+3	2E+2	1E-7	3E-10	7E-5	7E-4
		W, see ^{200}Bi	-	3E+2	1E-7	4E-10	-	-
83	Bismuth-213[2]	D, see ^{200}Bi	7E+3	3E+2	1E-7	4E-10	1E-4	1E-3
		W, see ^{200}Bi	-	4E+2	1E-7	5E-10	-	-
83	Bismuth-214[2]	D, see ^{200}Bi	2E+4 St. wall (2E+4)	8E+2	3E-7	1E-9	-	-
		W, see ^{200}Bi	-	9E-2	4E-7	1E-9	3E-4 -	3E-3 -
84	Polonium-203[2]	D, all compounds except those given for W	3E+4	6E+4	3E-5	9E-8	3E-4	3E-3
		W, oxides, hydroxides, and nitrates	-	9E+4	4E-5	1E-7	-	-
84	Polonium-205[2]	D, see ^{203}Po	2E+4	4E+4	2E-5	5E-8	3E-4	3E-3
		W, see ^{203}Po	-	7E+4	3E-5	1E-7	-	-
84	Polonium-207	D, see ^{203}Po	8E+3	3E+4	1E-5	3E-8	1E-4	1E-3
		W, see ^{203}Po	-	3E+4	1E-5	4E-8	-	-
84	Polonium-210	D, see ^{203}Po	3E+0	6E-1	3E-10	9E-13	4E-8	4E-7
		W, see ^{203}Po	-	6E-1	3E-10	9E-13	-	-
85	Astatine-207[2]	D, halides	6E+3	3E+3	1E-6	4E-9	8E-5	8E-4
		W	-	2E+3	9E-7	3E-9	-	-
85	Astatine-211	D, halides	1E+2	8E+1	3E-8	1E-10	2E-6	2E-5
		W	-	5E+1	2E-8	8E-11	-	-
86	Radon-220	With daughters removed	-	2E+4	7E-6	2E-8	-	-
		With daughters present	-	2E+1 (or 12 working level months)	9E-9 (or 1.0 working level)	3E-11	-	-

58 FR 67657

Atomic No.	Radionuclide	Class	Table 1 Occupational Values Col. 1 Oral Ingestion ALI (μCi)	Table 1 Occupational Values Col. 2 Inhalation ALI (μCi)	Table 1 Occupational Values Col. 3 Inhalation DAC (μCi/ml)	Table 2 Effluent Concentrations Col. 1 Air (μCi/ml)	Table 2 Effluent Concentrations Col. 2 Water (μCi/ml)	Table 3 Releases to Sewers Monthly Average Concentration (μCi/ml)
86	Radon-222	With daughters removed	-	1E+4	4E-6	1E-8	-	-
		With daughters present	-	1E+2 (or 4 working level months)	3E-8 (or 0.33 working level)	1E-10	-	-
87	Francium-222[2]	D, all compounds	2E+3	5E+2	2E-7	6E-10	3E-5	3E-4
87	Francium-223[2]	D, all compounds	6E+2	8E+2	3E-7	1E-9	8E-6	8E-5
88	Radium-223	W, all compounds	5E+0 Bone surf (9E+0)	7E-1 -	3E-10 -	9E-13 -	- 1E-7	- 1E-6
88	Radium-224	W, all compounds	8E+0 Bone surf (2E+1)	2E+0 -	7E-10 -	2E-12 -	- 2E-7	- 2E-6
88	Radium-225	W, all compounds	8E+0 Bone surf (2E+1)	7E-1 -	3E-10 -	9E-13 -	- 2E-7	- 2E-6
88	Radium-226	W, all compounds	2E+0 Bone surf (5E+0)	6E-1 -	3E-10 -	9E-13 -	- 6E-8	- 6E-7
88	Radium-227[2]	W, all compounds	2E+4 Bone surf (2E+4)	1E+4 Bone surf (2E+4)	6E-6 -	- 3E-8	- 3E-4	- 3E-3
88	Radium-228	W, all compounds	2E+0 Bone surf (4E+0)	1E+0 -	5E-10 -	2E-12 -	- 6E-8	- 6E-7
89	Actinium-224	D, all compounds except those given for W and Y	2E+3 LLI wall (2E+3)	3E+1 Bone surf (4E+1)	1E-8 -	- 5E-11	- 3E-5	- 3E-4
		W, halides and nitrates	-	5E+1	2E-8	7E-11	-	-
		Y, oxides and hydroxides	-	5E+1	2E-8	6E-11	-	-
89	Actinium-225	D, see ^{224}Ac	5E+1 LLI wall (5E+1)	3E-1 Bone surf (5E-1)	1E-10 -	- 7E-13	- 7E-7	- 7E-6
		W, see ^{224}Ac	-	6E-1	3E-10	9E-13	-	-
		Y, see ^{224}Ac	-	6E-1	3E-10	9E-13	-	-
89	Actinium-226	D, see ^{224}Ac	1E+2 LLI wall (1E+2)	3E+0 Bone surf (4E+0)	1E-9 -	- 5E-12	- 2E-6	- 2E-5
		W, see ^{224}Ac	-	5E+0	2E-9	7E-12	-	-
		Y, see ^{224}Ac	-	5E+0	2E-9	6E-12	-	-
89	Actinium-227	D, see ^{224}Ac	2E-1 Bone surf (4E-1)	4E-4 Bone surf (8E-4)	2E-13 -	- 1E-15	- 5E-9	- 5E-8
		W, see ^{224}Ac	-	2E-3 Bone surf (3E-3)	7E-13 -	- 4E-15	- -	- -
		Y, see ^{224}Ac	-	4E-3	2E-12	6E-15	-	-

58 FR 67657

Atomic No.	Radionuclide	Class	Table 1 Occupational Values Col. 1 Oral Ingestion ALI (μCi)	Table 1 Occupational Values Col. 2 Inhalation ALI (μCi)	Table 1 Occupational Values Col. 3 Inhalation DAC (μCi/ml)	Table 2 Effluent Concentrations Col. 1 Air (μCi/ml)	Table 2 Effluent Concentrations Col. 2 Water (μCi/ml)	Table 3 Releases to Sewers Monthly Average Concentration (μCi/ml)
89	Actinium-228	D, see ^{224}Ac	2E+3	9E+0 Bone surf	4E-9	-	3E-5	3E-4
			-	(2E+1)	-	2E-11	-	-
		W, see ^{224}Ac	-	4E+1	2E-8	-	-	-
			-	Bone surf (6E+1)	-	8E-11	-	-
		Y, see ^{224}Ac	-	4E+1	2E-8	6E-11	-	-
90	Thorium-226[2]	W, all compounds except those given for Y	5E+3 St. wall (5E+3)	2E+2	6E-8	2E-10	-	-
				-	-	-	7E-5	7E-4
		Y, oxides and hydroxides	-	1E+2	6E-8	2E-10	-	-
90	Thorium-227	W, see ^{226}Th	1E+2	3E-1	1E-10	5E-13	2E-6	2E-5
		Y, see ^{226}Th	-	3E-1	1E-10	5E-13	-	-
90	Thorium-228	W, see ^{226}Th	6E+0 Bone surf (1E+1)	1E-2 Bone surf (2E-2)	4E-12	-	-	-
			-	2E-2	7E-12	3E-14	2E-7	2E-6
		Y, see ^{226}Th	-			2E-14	-	-
90	Thorium-229	W, see ^{226}Th	6E-1 Bone surf (1E+0)	9E-4 Bone surf (2E-3)	4E-13	-	-	-
			-	2E-3	1E-12	3E-15	2E-8	2E-7
		Y, see ^{226}Th	-	Bone surf (3E-3)	-	4E-15	-	-
90	Thorium-230	W, see ^{226}Th	4E+0 Bone surf (9E+0)	6E-3 Bone surf (2E-2)	3E-12	-	-	-
			-	2E-2	6E-12	2E-14	1E-7	1E-6
		Y, see ^{226}Th	-	Bone surf (2E-2)	-	3E-14	-	-
90	Thorium-231	W, see ^{226}Th	4E+3	6E+3	3E-6	9E-9	5E-5	5E-4
		Y, see ^{226}Th	-	6E+3	3E-6	9E-9	-	-
90	Thorium-232	W, see ^{226}Th	7E-1 Bone surf (2E+0)	1E-3 Bone surf (3E-3)	5E-13	-	-	-
			-	3E-3	1E-12	4E-15	3E-8	3E-7
		Y, see ^{226}Th	-	Bone surf (4E-3)	-	6E-15	-	-
90	Thorium-234	W, see ^{226}Th	3E+2 LLI wall (4E+2)	2E+2	8E-8	3E-10	-	-
			-	-	-	-	5E-6	5E-5
		Y, see ^{226}Th	-	2E+2	6E-8	2E-10	-	-
91	Protactinium-227[2]	W, all compounds except those given for Y	4E+3	1E+2	5E-8	2E-10	5E-5	5E-4
		Y, oxides and hydroxides	-	1E+2	4E-8	1E-10	-	-
91	Protactinium-228	W, see ^{227}Pa	1E+3	1E+1 Bone surf.	5E-9	-	2E-5	2E-4
			-	(2E+1)	-	3E-11	-	-
		Y, see ^{226}Pa	-	1E+1	5E-9	2E-11	-	-

58 FR 67857

Atomic No.	Radionuclide	Class	Table 1 Occupational Values: Col. 1 Oral Ingestion ALI (μCi)	Table 1 Occupational Values: Col. 2 Inhalation ALI (μCi)	Table 1 Occupational Values: Col. 3 Inhalation DAC (μCi/ml)	Table 2 Effluent Concentrations: Col. 1 Air (μCi/ml)	Table 2 Effluent Concentrations: Col. 2 Water (μCi/ml)	Table 3 Releases to Sewers: Monthly Average Concentration (μCi/ml)
91	Protactinium-230	W, see ^{227}Pa	6E+2 Bone surf (9E+2)	5E+0	2E-9	7E-12	-	-
		Y, see ^{227}Pa	-	4E+0	1E-9	5E-12	1E-5 -	1E-4 -
91	Protactinium-231	W, see ^{227}Pa	2E-1 Bone surf (5E-1)	2E-3 Bone surf (4E-3)	6E-13 -	- 6E-15	- 6E-9	- 6E-8
		Y, see ^{226}Pa	- -	4E-3 Bone surf (6E-3)	2E-12 -	- 8E-15	- -	- -
91	Protactinium-232	W, see ^{227}Pa	1E+3 -	2E+1 Bone surf (6E+1)	9E-9 -	- 8E-11	2E-5 -	2E-4 -
		Y, see ^{227}Pa	- -	6E+1 Bone surf (7E+1)	2E-8 -	- 1E-10	- -	- -
91	Protactinium-233	W, see ^{227}Pa	1E+3 LLI wall (2E+3)	7E+2 -	3E-7 -	1E-9 -	- 2E-5	- 2E-4
		Y, see ^{227}Pa	-	6E+2	2E-7	8E-10	-	-
91	Protactinium-234	W, see ^{227}Pa	2E+3	8E+3	3E-6	1E-8	3E-5	3E-4
		Y, see ^{227}Pa	-	7E+3	3E-6	9E-9	-	-
92	Uranium-230	D, UF_6, UO_2F_2, $UO_2(NO_3)_2$	4E+0 Bone surf (6E+0)	4E-1 Bone surf (6E-1)	2E-10 -	- 8E-13	- 8E-8	- 8E-7
		W, UO_3, UF_4, UCl_4	-	4E-1	1E-10	5E-13	-	-
		Y, UO_2, U_3O_8	-	3E-1	1E-10	4E-13	-	-
92	Uranium-231	D, see ^{230}U	5E+3 LLI wall (4E+3)	8E+3 -	3E-6 -	1E-8 -	- 6E-5	- 6E-4
		W, see ^{230}U	-	6E+3	2E-6	8E-9	-	-
		Y, see ^{230}U	-	5E+3	2E-6	6E-9	-	-
92	Uranium-232	D, see ^{230}U	2E+0 Bone surf (4E+0)	2E-1 Bone surf (4E-1)	9E-11 -	- 6E-13	- 6E-8	- 6E-7
		W, see ^{230}U	-	4E-1	2E-10	5E-13	-	-
		Y, see ^{230}U	-	8E-3	3E-12	1E-14	-	-
92	Uranium-233	D, see ^{230}U	1E+1 Bone surf (2E+1)	1E+0 Bone surf (2E+0)	5E-10 -	- 3E-12	- 3E-7	- 3E-6
		W, see ^{230}U	-	7E-1	3E-10	1E-12	-	-
		Y, see ^{230}U	-	4E-2	2E-11	5E-14	-	-
92	Uranium-234[3]	D, see ^{230}U	1E+1 Bone surf (2E+1)	1E+0 Bone surf (2E+0)	5E-10 -	- 3E-12	- 3E-7	- 3E-6
		W, see ^{230}U	-	7E-1	3E-10	1E-12	-	-
		Y, see ^{230}U	-	4E-2	2E-11	5E-14	-	-

58 FR 67657

Atomic No.	Radionuclide	Class	Table 1 Occupational Values Col. 1 Oral Ingestion ALI (μCi)	Table 1 Occupational Values Col. 2 Inhalation ALI (μCi)	Table 1 Occupational Values Col. 3 Inhalation DAC (μCi/ml)	Table 2 Effluent Concentrations Col. 1 Air (μCi/ml)	Table 2 Effluent Concentrations Col. 2 Water (μCi/ml)	Table 3 Releases to Sewers Monthly Average Concentration (μCi/ml)
92	Uranium-235[3]	D, see ^{230}U	1E+1 Bone surf (2E+1)	1E+0 Bone surf (2E+0)	6E-10 -	- 3E-12	- 3E-7	- 3E-6
		W, see ^{230}U	-	8E-1	3E-10	1E-12	-	-
		Y, see ^{230}U	-	4E-2	2E-11	6E-14	-	-
92	Uranium-235	D, see ^{230}U	1E+1 Bone surf (2E+1)	1E+0 Bone surf (2E+0)	5E-10 -	- 3E-12	- 3E-7	- 3E-6
		W, see ^{230}U	-	8E-1	3E-10	1E-12	-	-
		Y, see ^{230}U	-	4E-2	2E-11	6E-14	-	-
92	Uranium-237	D, see ^{230}U	2E+3 LLI wall (2E+3)	3E+3 -	1E-6 -	4E-9 -	- 3E-5	- 3E-4
		W, see ^{230}U	-	2E+3	7E-7	2E-9	-	-
		Y, see ^{230}U	-	2E+3	6E-7	2E-9	-	-
92	Uranium-238[3]	D, see ^{230}U	1E+1 Bone surf (2E+1)	1E+0 Bone surf (2E+0)	6E-10 -	- 3E-12	- 3E-7	- 3E-6
		W, see ^{230}U	-	8E-1	3E-10	1E-12	-	-
		Y, see ^{230}U	-	4E-2	2E-11	6E-14	-	-
92	Uranium-239[2]	D, see ^{230}U	7E+4	2E+5	8E-5	3E-7	9E-4	9E-3
		W, see ^{230}U	-	2E+5	7E-5	2E-7	-	-
		Y, see ^{230}U	-	2E+5	6E-5	2E-7	-	-
92	Uranium-240	D, see ^{230}U	1E+3	4E+3	2E-6	5E-9	2E-5	2E-4
		W, see ^{230}U	-	3E+3	1E-6	4E-9	-	-
		Y, see ^{230}U	-	2E+3	1E-6	3E-9	-	-
92	Uranium-natural[3]	D, see ^{230}U	1E+1 Bone surf (2E+1)	1E+0 Bone surf (2E+0)	5E-10 -	- 3E-12	- 3E-7	- 3E-6
		W, see ^{230}U	-	8E-1	3E-10	9E-13	-	-
		Y, see ^{230}U	-	5E-2	2E-11	9E-14	-	-
93	Neptunium-232[2]	W, all compounds	1E+5 -	2E+3 Bone surf (5E+2)	7E-7 -	- 6E-9	2E-3 -	2E-2 -
93	Neptunium-233[2]	W, all compounds	8E+5	3E+6	1E-3	4E-6	1E-2	1E-1
93	Neptunium-234	W, all compounds	2E+3	3E+3	1E-6	4E-9	3E-5	3E-4
93	Neptunium-235	W, all compounds	2E+4 LLI wall (2E+4)	8E+2 Bone surf (1E+3)	3E-7 -	- 2E-9	- 3E-4	- 3E-3
93	Neptunium-236 (1.15E+5 y)	W, all compounds	3E+0 Bone surf (6E+0)	2E-2 Bone surf (5E-2)	9E-12 -	- 8E-14	- 9E-8	- 9E-7
93	Neptunium-236m (22.5 h)	W, all compounds	3E+3 Bone surf (4E+3)	3E+1 Bone surf (7E+1)	1E-8 -	- 1E-10	- 5E-5	- 5E-4
93	Neptunium-237	W, all compounds	5E-1 Bone surf (1E+0)	4E-3 Bone surf (1E-2)	2E-12 -	- 1E-14	- 2E-8	- 2E-7

58 FR 67657

Atomic No.	Radionuclide	Class	Table 1 Occupational Values			Table 2 Effluent Concentrations		Table 3 Releases to Sewers
			Col. 1 Oral Ingestion ALI (μCi)	Col. 2 Inhalation ALI (μCi)	Col. 3 Inhalation DAC (μCi/ml)	Col. 1 Air (μCi/ml)	Col. 2 Water (μCi/ml)	Monthly Average Concentration (μCi/ml)
93	Neptunium-238	W, all compounds	1E+3	6E+1 Bone surf	3E-8	-	2E-5	2E-4
			-	(2E+2)	-	2E-10	-	-
93	Neptunium-239	W, all compounds	2E+3	2E+3	9E-7	3E-9	-	-
			LLI wall (2E+3)	-	-	-	2E-5	2E-4
93	Neptunium-240[2]	W, all compounds	2E+4	8E+4	3E-5	1E-7	3E-4	3E-3
94	Plutonium-234	W, all compounds except PuO_2	8E+3	2E+2	9E-8	3E-10	1E-4	1E-3
		Y, PuO_2	-	2E+2	8E-8	3E-10	-	-
94	Plutonium-235[2]	W, see ^{234}Pu	9E+5	3E+6	1E-3	4E-6	1E-2	1E-1
		Y, see ^{234}Pu	-	3E+6	1E-3	3E-6	-	-
94	Plutonium-236	W, see ^{234}Pu	2E+0	2E-2	8E-12	-	-	-
			Bone surf (4E+0)	Bone surf (4E-2)	-	5E-14	6E-8	6E-7
		Y, see ^{234}Pu	-	4E-2	2E-11	6E-14	-	-
94	Plutonium-237	W, see ^{234}Pu	1E+4	3E+3	1E-6	5E-9	2E-4	2E-3
		Y, see ^{234}Pu	-	3E+3	1E-6	4E-9	-	-
94	Plutonium-238	W, see ^{234}Pu	9E-1	7E-3	3E-12	-	-	-
			Bone surf (2E+0)	Bone surf (1E-2)	-	2E-14	2E-8	2E-7
		Y, see ^{234}Pu	-	2E-2	8E-12	2E-14	-	-
94	Plutonium-239	W, see ^{234}Pu	8E-1	6E-3	3E-12	-	-	-
			Bone surf (1E+0)	Bone surf (1E-2)	-	2E-14	2E-8	2E-7
		Y, see ^{234}Pu	-	2E-2	7E-12	-	-	-
			-	Bone surf (2E-2)	-	2E-14	-	-
94	Plutonium-240	W, see ^{234}Pu	8E-1	6E-3	3E-12	-	-	-
			Bone surf (1E+0)	Bone surf (1E-2)	-	2E-14	2E-8	2E-7
		Y, see ^{234}Pu	-	2E-2	7E-12	-	-	-
			-	Bone surf (2E-2)	-	2E-14	-	-
94	Plutonium-241	W, see ^{234}Pu	4E+1	3E-1	1E-10	-	-	-
			Bone surf (7E+1)	Bone surf (6E-1)	-	8E-13	1E-6	1E-5
		Y, see ^{234}Pu	-	8E-1	3E-10	-	-	-
			-	Bone surf (1E+0)	-	1E-12	-	-

58 FR 67657

Atomic No.	Radionuclide	Class	Table 1 Occupational Values Col. 1 Oral Ingestion ALI (μCi)	Table 1 Occupational Values Col. 2 Inhalation ALI (μCi)	Table 1 Occupational Values Col. 3 Inhalation DAC (μCi/ml)	Table 2 Effluent Concentrations Col. 1 Air (μCi/ml)	Table 2 Effluent Concentrations Col. 2 Water (μCi/ml)	Table 3 Releases to Sewers Monthly Average Concentration (μCi/ml)
94	Plutonium-242	W, see ^{234}Pu	8E-1 Bone surf (1E+0)	7E-3 Bone surf (1E-2)	3E-12	-	-	-
		Y, see ^{234}Pu	-	2E-2	7E-12	2E-14	2E-8	2E-7
			-	Bone surf (2E-2)	-	2E-14	-	-
94	Plutonium-243	W, see ^{234}Pu	2E+4	4E+4	2E-5	5E-8	2E-4	2E-3
		Y, see ^{234}Pu	-	4E+4	2E-5	5E-8	-	-
94	Plutonium-244	W, see ^{234}Pu	8E-1 Bone surf (2E+0)	7E-3 Bone surf (1E-2)	3E-12	-	-	-
		Y, see ^{234}Pu	-	2E-2	7E-12	2E-14	2E-8	2E-7
			-	Bone surf (2E-2)	-	2E-14	-	-
94	Plutonium-245	W, see ^{234}Pu	2E+3	5E+3	2E-6	6E-9	3E-5	3E-4
		Y, see ^{234}Pu	-	4E+3	2E-6	6E-9	-	-
94	Plutonium-246	W, see ^{234}Pu	4E+2 LLI wall (4E+2)	3E+2	1E-7	4E-10	-	-
		Y, see ^{234}Pu	-	3E+2	1E-7	4E-10	6E-6	6E-5
95	Americium-237[2]	W, all compounds	8E+4	3E+5	1E-4	4E-7	1E-3	1E-2
95	Americium-238[2]	W, all compounds	4E+4	3E+3	1E-6	-	5E-4	5E-3
			-	Bone surf (6E+3)	-	9E-9	-	-
95	Americium-239	W, all compounds	5E+3	1E+4	5E-6	2E-8	7E-5	7E-4
95	Americium-240	W, all compounds	2E+3	3E+3	1E-6	4E-9	3E-5	3E-4
95	Americium-241	W, all compounds	8E-1 Bone surf (1E+0)	6E-3 Bone surf (1E-2)	3E-12	-	-	-
					-	2E-14	2E-8	2E-7
95	Americium-242m	W, all compounds	8E-1 Bone surf (1E+0)	6E-3 Bone surf (1E-2)	3E-12	-	-	-
					-	2E-14	2E-8	2E-7
95	Americium-242	W, all compounds	4E+3	8E+1	4E-8	-	5E-5	5E-4
			-	Bone surf (9E+1)	-	1E-10	-	-
95	Americium-243	W, all compounds	8E-1 Bone surf (1E+0)	6E-3 Bone surf (1E-2)	3E-12	-	-	-
					-	2E-14	2E-8	2E-7
95	Americium-244m[2]	W, all compounds	6E+4 St. wall (8E+4)	4E+3 Bone surf (7E+3)	2E-6	-	-	-
					-	1E-8	1E-3	1E-2
95	Americium-244	W, all compounds	3E+3	2E+2	8E-8	-	4E-5	4E-4
			-	Bone surf (3E+2)	-	4E-10	-	-
95	Americium-245	W, all compounds	3E+4	8E+4	3E-5	1E-7	4E-4	4E-3

58 FR 67657

Atomic No.	Radionuclide	Class	Table 1 Occupational Values: Col. 1 Oral Ingestion ALI (μCi)	Table 1 Occupational Values: Col. 2 Inhalation ALI (μCi)	Table 1 Occupational Values: Col. 3 Inhalation DAC (μCi/ml)	Table 2 Effluent Concentrations: Col. 1 Air (μCi/ml)	Table 2 Effluent Concentrations: Col. 2 Water (μCi/ml)	Table 3 Releases to Sewers: Monthly Average Concentration (μCi/ml)
95	Americium-245m[2]	W, all compounds	5E+4 St. wall (6E+4)	2E+5 -	8E-5 -	3E-7 -	- 8E-4	- 8E-3
95	Americium-246[2]	W, all compounds	3E+4	1E+5	4E-5	1E-7	4E-4	4E-3
96	Curium-238	W, all compounds	2E+4	1E+3	5E-7	2E-9	2E-4	2E-3
96	Curium-240	W, all compounds	6E+1 Bone surf (8E+1)	6E-1 Bone surf (6E-1)	2E-10 -	- 9E-13	- 1E-6	- 1E-5
96	Curium-241	W, all compounds	1E+3 -	3E+1 Bone surf (4E+1)	1E-8 -	- 5E-11	2E-5 -	2E-4 -
96	Curium-242	W, all compounds	3E+1 Bone surf (5E+1)	3E-1 Bone surf (3E-1)	1E-10 -	- 4E-13	- 7E-7	- 7E-6
96	Curium-243	W, all compounds	1E+0 Bone surf (2E+0)	9E-3 Bone surf (2E-2)	4E-12 -	- 2E-14	- 3E-8	- 3E-7
96	Curium-244	W, all compounds	1E+0 Bone surf (3E+0)	1E-2 Bone surf (2E-2)	5E-12 -	- 3E-14	- 3E-8	- 3E-7
96	Curium-245	W, all compounds	7E-1 Bone surf (1E+0)	6E-3 Bone surf (1E-2)	3E-12 -	- 2E-14	- 2E-8	- 2E-7
96	Curium-246	W, all compounds	7E-1 Bone surf (1E+0)	6E-3 Bone surf (1E-2)	3E-12 -	- 2E-14	- 2E-8	- 2E-7
96	Curium-247	W, all compounds	8E-1 Bone surf (1E+0)	6E-3 Bone surf (1E-2)	3E-12 -	- 2E-14	- 2E-8	- 2E-7
96	Curium-248	W, all compounds	2E-1 Bone surf (4E-1)	2E-3 Bone surf (3E-3)	7E-13 -	- 4E-15	- 5E-9	- 5E-8
96	Curium-249[2]	W, all compounds	5E+4 -	2E+4 Bone surf (3E+4)	7E-6 -	- 4E-8	7E-4 -	7E-3 -
96	Curium-250	W, all compounds	4E-2 Bone surf (6E-2)	3E-4 Bone surf (5E-4)	1E-13 -	- 8E-16	- 9E-10	- 9E-9
97	Berkelium-245	W, all compounds	2E+3	1E+3	5E-7	2E-9	3E-5	3E-4
97	Berkelium-246	W, all compounds	3E+3	3E+3	1E-6	4E-9	4E-5	4E-4
97	Berkelium-247	W, all compounds	5E-1 Bone surf (1E+0)	4E-3 Bone surf (9E-3)	2E-12 -	- 1E-14	- 2E-8	- 2E-7
97	Berkelium-249	W, all compounds	2E+2 Bone surf (5E+2)	2E+0 Bone surf (4E+0)	7E-10 -	- 5E-12	- 6E-6	- 6E-5

58 FR 67657

58 FR 67657

Atomic No.	Radionuclide	Class	Table 1 Occupational Values: Col. 1 Oral Ingestion ALI (μCi)	Table 1 Occupational Values: Col. 2 Inhalation ALI (μCi)	Table 1 Occupational Values: Col. 3 Inhalation DAC (μCi/ml)	Table 2 Effluent Concentrations: Col. 1 Air (μCi/ml)	Table 2 Effluent Concentrations: Col. 2 Water (μCi/ml)	Table 3 Releases to Sewers: Monthly Average Concentration (μCi/ml)
97	Berkelium-250	W, all compounds	9E+3	3E+2 Bone surf	1E-7	-	1E-4	1E-3
			-	(7E+2)	-	1E-9	-	-
98	Californium-244[2]	W, all compounds except those given for Y	3E+4 St. wall	6E+2	2E-7	8E-10	-	-
			(3E+4)	-	-	-	4E-4	4E-3
		Y, oxides and hydroxides	-	6E+2	2E-7	8E-10	-	-
98	Californium-246	W, see ^{244}Cf	4E+2	9E+0	4E-9	1E-11	5E-6	5E-5
		Y, see ^{244}Cf	-	9E+0	4E-9	1E-11	-	-
98	Californium-248	W, see ^{244}Cf	8E+0 Bone surf	6E-2 Bone surf	3E-11	-	-	-
			(2E+1)	(1E-1)	-	2E-13	2E-7	2E-6
		Y, see ^{244}Cf	-	1E-1	4E-11	1E-13	-	-
98	Californium-249	W, see ^{244}Cf	5E-1 Bone surf	4E-3 Bone surf	2E-12	-	-	-
			(1E+0)	(9E-3)	-	1E-14	2E-8	2E-7
		Y, see ^{244}Cf	-	1E-2 Bone surf	4E-12	-	-	-
			-	(1E-2)	-	2E-14	-	-
98	Californium-250	W, see ^{244}Cf	1E+0 Bone surf	9E-3 Bone surf	4E-12	-	-	-
			(2E+0)	(2E-2)	-	3E-14	3E-8	3E-7
		Y, see ^{244}Cf	-	3E-2	1E-11	4E-14	-	-
98	Californium-251	W, see ^{244}Cf	5E-1 Bone surf	4E-3 Bone surf	2E-12	-	-	-
			(1E+0)	(9E-3)	-	1E-14	2E-8	2E-7
		Y, see ^{244}Cf	-	1E-2 Bone surf	4E-12	-	-	-
			-	(1E-2)	-	2E-14	-	-
98	Californium-252	W, see ^{244}Cf	2E+0 Bone surf	2E-2 Bone surf	8E-12	-	-	-
			(5E+0)	(4E-2)	-	5E-14	7E-8	7E-7
		Y, see ^{244}Cf	-	3E-2	1E-11	5E-14	-	-
98	Californium-253	W, see ^{244}Cf	2E+2 Bone surf	2E+0	8E-10	3E-12	-	-
			(4E+2)	-	-	-	5E-6	5E-5
		Y, see ^{244}Cf	-	2E+0	7E-10	2E-12	-	-
98	Californium-254	W, see ^{244}Cf	2E+0	2E-2	9E-12	3E-14	3E-8	3E-7
		Y, see ^{244}Cf	-	2E-2	7E-12	2E-14	-	-
99	Einsteinium-250	W, all compounds	4E+4	5E+2 Bone surf	2E-7	-	6E-4	6E-3
			-	(1E+3)	-	2E-9	-	-
99	Einsteinium-251	W, all compounds	7E+3	9E+2 Bone surf	4E-7	-	1E-4	1E-3
			-	(1E+3)	-	2E-9	-	-
99	Einsteinium-253	W, all compounds	2E+2	1E+0	6E-10	2E-12	2E-6	2E-5

Atomic No.	Radionuclide	Class	Table 1 Occupational Values: Col. 1 Oral Ingestion ALI (μCi)	Table 1 Occupational Values: Col. 2 Inhalation ALI (μCi)	Table 1 Occupational Values: Col. 3 Inhalation DAC (μCi/ml)	Table 2 Effluent Concentrations: Col. 1 Air (μCi/ml)	Table 2 Effluent Concentrations: Col. 2 Water (μCi/ml)	Table 3 Releases to Sewers: Monthly Average Concentration (μCi/ml)
99	Einsteinium-254m	W, all compounds	3E+2 LLI wall (3E+2)	1E+1 -	4E-9 -	1E-11 -	- 4E-6	- 4E-5
99	Einsteinium-254	W, all compounds	8E+0 Bone surf (2E+1)	7E-2 Bone surf (1E-1)	3E-11 -	- 2E-13	- 2E-7	- 2E-6
100	Fermium-252	W, all compounds	5E+2	1E+1	5E-9	2E-11	6E-6	6E-5
100	Fermium-253	W, all compounds	1E+3	1E+1	4E-9	1E-11	1E-5	1E-4
100	Fermium-254	W, all compounds	3E+3	9E+1	4E-8	1E-10	4E-5	4E-4
100	Fermium-255	W, all compounds	5E+2	2E+1	9E-9	3E-11	7E-6	7E-5
100	Fermium-257	W, all compounds	2E+1 Bone surf (4E+1)	2E-1 Bone surf (2E-1)	7E-11 -	- 3E-13	- 5E-7	- 5E-6
101	Mendelevium-257	W, all compounds	7E+3 -	8E+1 Bone surf (9E+1)	4E-8 -	- 1E-10	1E-4 -	1E-3 -
101	Mendelevium-258	W, all compounds	3E+1 Bone surf (5E+1)	2E-1 Bone surf (3E-1)	1E-10 -	- 5E-13	- 6E-7	- 6E-6
-	Any single radionuclide not listed above with decay mode other than alpha emission or spontaneous fission and with radioactive half-life less than 2 hours	Submersion[1]	-	2E+2	1E-7	1E-9	-	-
-	Any single radionuclide not listed above with decay mode other than alpha emission or spontaneous fission and with radioactive half-life greater than 2 hours		-	2E-1	1E-10	1E-12	1E-8	1E-7
-	Any single radionuclide not listed above that decays by alpha emission or spontaneous fission, or any mixture for which either the identity or the concentration of any radionuclide in the mixture is not known		-	4E-4	2E-13	1E-15	2E-9	2E-8

58 FR 67657

58 FR 67857

FOOTNOTES:

[1]"Submersion" means that values given are for submersion in a hemispherical semi-infinite cloud of airborne material.

[2]These radionuclides have radiological half-lives of less than 2 hours. The total effective dose equivalent received during operations with these radionuclides might include a significant contribution from external exposure. The DAC values for all radionuclides, other than those designated Class "Submersion," are based upon the committed effective dose equivalent due to the intake of the radionuclide into the body and do NOT include potentially significant contributions to dose equivalent from external exposures. The licensee may substitute 1E-7 μCi/ml for the listed DAC to account for the submersion dose prospectively, but should use individual monitoring devices or other radiation measuring instruments that measure external exposure to demonstrate compliance with the limits. (See § 20.1203.)

[3]For soluble mixtures of U-238, U-234, and U-235 in air, chemical toxicity may be the limiting factor (see § 20.1201(e)). If the percent by weight (enrichment) of U-235 is not greater than 5, the concentration value for a 40-hour workweek is 0.2 milligrams uranium per cubic meter of air average. For any enrichment, the product of the average concentration and time of exposure during a 40-hour workweek shall not exceed 8E-3 (SA) μCi-hr/ml, where SA is the specific activity of the uranium inhaled. The specific activity for natural uranium is 6.77E-7 curies per gram U. The specific activity for other mixtures of U-238, U-235, and U-234, if not known, shall be:

SA = 3.6E-7 curies/gram U U-depleted

$$SA = [0.4 + 0.38\ (\text{enrichment}) + 0.0034\ (\text{enrichment})^2]\ E\text{-}6\ ,\quad \text{enrichment} \geq 0.72$$

where enrichment is the percentage by weight of U-235, expressed as percent.

NOTE:

1. If the identity of each radionuclide in a mixture is known but the concentration of one or more of the radionuclides in the mixture is not known, the DAC for the mixture shall be the most restrictive DAC of any radionuclide in the mixture.

2. If the identity of each radionuclide in the mixture is not known, but it is known that certain radionuclides specified in this appendix are not present in the mixture, the inhalation ALI, DAC, and effluent and sewage concentrations for the mixture are the lowest values specified in this appendix for any radionuclide that is not known to be absent from the mixture; or

	Table 1 Occupational Values			Table 2 Effluent Concentrations		Table 3 Releases to Sewers
	Col. 1	Col. 2	Col. 3	Col. 1	Col. 2	
	Oral Ingestion	Inhalation				
Radionuclide	ALI (μCi)	ALI (μCi)	DAC (μCi/ml)	Air (μCi/ml)	Water (μCi/ml)	Monthly Average Concentration (μCi/ml)
If it is known that Ac-227-D and Cm-250-W are not present	-	7E-4	3E-13	-	-	-
If, in addition, it is known that Ac-227-W,Y, Th-229-W,Y, Th-230-W, Th-232-W,Y, Pa-231-W,Y, Np-237-W, Pu-239-W, Pu-240-W, Pu-242-W, Am-241-W, Am-242m-W, Am-243-W, Cm-245-W, Cm-246-W, Cm-247-W, Cm-248-W, Bk-247-W, Cf-249-W, and Cf-251-W are not present	-	7E-3	3E-12	-	-	-
If, in addition, it is known that Sm-146-W, Sm-147-W, Gd-148-D,W, Gd-152-D,W, Th-228-W,Y, Th-230-Y, U-232-Y, U-233-Y, U-234-Y, U-235-Y, U-236-Y, U-238-Y, Np-236-W, Pu-236-W,Y, Pu-238-W,Y, Pu-239-Y, Pu-240-Y, Pu-242-Y, Pu-244-W,Y, Cm-243-W, Cm-244-W, Cf-248-W, Cf-249-Y, Cf-250-W,Y, Cf-251-Y, Cf-252-W,Y, and Cf-254-W,Y are not present	-	7E-2	3E-11	-	-	-
If, in addition, it is known that Pb-210-D, Bi-210m-W, Po-210-D,W, Ra-223-W, Ra-225-W, Ra-226-W, Ac-225-D,W,Y, Th-227-W,Y, U-230-D,W,Y, U-232-D,W, Pu-241-W, Cm-240-W, Cm-242-W, Cf-248-Y, Es-254-W, Fm-257-W, and Md-258-W are not present	-	7E-1	3E-10	-	-	-

Radionuclide	Table 1 Occupational Values Col. 1 Oral Ingestion ALI (μCi)	Table 1 Occupational Values Col. 2 Inhalation ALI (μCi)	Table 1 Occupational Values Col. 3 Inhalation DAC (μCi/ml)	Table 2 Effluent Concentrations Col. 1 Air (μCi/ml)	Table 2 Effluent Concentrations Col. 2 Water (μCi/ml)	Table 3 Releases to Sewers Monthly Average Concentration (μCi/ml)
If, in addition, it is known that Si-32-Y, Ti-44-Y, Fe-60-D, Sr-90-Y, Zr-93-D, Cd-113m-D, Cd-113-D, In-115-D,W, La-138-D, Lu-176-W, Hf-178m-D,W, Hf-182-D,W, Bi-210m-D, Ra-224-W, Ra-228-W, Ac-226-D,W,Y, Pa-230-W,Y, U-233-D,W, U-234-D,W, U-235-D,W, U-236-D,W, U-238-D,W, Pu-241-Y, Bk-249-W, Cf-253-W,Y, and Es-253-W are not present	-	7E-0	3E-9	-	-	-
If it is known that Ac-227-D,W,Y, Th-229-W,Y, Th-232-W,Y, Pa-231-W,Y, Cm-248-W, and Cm-250-W are not present -	-	-		1E-14	-	-
If, in addition, it is known that Sm-146-W, Gd-148-D,W, Gd-152-D, Th-228-W,Y, Th-230-W,Y, U-232-Y, U-233-Y, U-234-Y, U-235-Y, U-236-Y, U-238-Y, U-Nat-Y, Np-236-W, Np-237-W, Pu-236-W,Y, Pu-238-W,Y, Pu-239-W,Y, Pu-240-W,Y, Pu-242-W,Y, Pu-244-W,Y, Am-241-W, Am-242m-W, Am-243-W, Cm-243-W, Cm-244-W, Cm-245-W, Cm-246-W, Cm-247-W, Bk-247-W, Cf-249-W,Y, Cf-250-W,Y, Cf-251-W,Y, Cf-252-W,Y, and Cf-254-W,Y are not present	-	-	-	1E-13	-	-
If, in addition, it is known that Sm-147-W, Gd-152-W, Pb-210-D, Bi-210m-W, Po-210-D,W, Ra-223-W, Ra-225-W, Ra-226-W, Ac-225-D,W,Y, Th-227-W,Y, U-230-D,W,Y, U-232-D,W, U-Nat-W, Pu-241-W, Cm-240-W, Cm-242-W, Cf-248-W,Y, Es-254-W, Fm-257-W, and Md-258-W are not present	-	-	-	1E-12	-	-
If, in addition it is known that Fe-60, Sr-90, Cd-113m, Cd-113, In-115, I-129, Cs-134, Sm-145, Sm-147, Gd-148, Gd-152, Hg-194 (organic), Bi-210m, Ra-223, Ra-224, Ra-225, Ac-225, Th-228, Th-230, U-233, U-234, U-235, U-236, U-238, U-Nat, Cm-242, Cf-248, Es-254, Fm-257, and Md-258 are not present	-	-	-	-	1E-6	1E-5

3. If a mixture of radionuclides consists of uranium and its daughters in ore dust (10 μm AMAD particle distribution assumed) prior to chemical separation of the uranium from the ore, the following values may be used for the DAC of the mixture: 6E-11 μCi of gross alpha activity from uranium-238, uranium-234, thorium-230, and radium-226 per milliliter of air; 3E-11 μCi of natural uranium per milliliter of air; or 45 micrograms of natural uranium per cubic meter of air.

4. If the identity and concentration of each radionuclide in a mixture are known, the limiting values should be derived as follows: determine, for each radionuclide in the mixture, the ratio between the concentration present in the mixture and the concentration otherwise established in Appendix B for the specific radionuclide when not in a mixture. The sum of such ratios for all of the radionuclides in the mixture may not exceed "1" (i.e., "unity").

Example: If radionuclides "A," "B," and "C" are present in concentrations C_A, C_B, and C_C, and if the applicable DACs are DAC_A, DAC_B, and DAC_C, respectively, then the concentrations shall be limited so that the following relationship exists:

$$\frac{C_A}{DAC_A} + \frac{C_B}{DAC_B} + \frac{C_C}{DAC_C} \leq 1$$

58 FR 67657

APPENDIX C

EMS SOFTWARE DOCUMENTATION

APPENDIX C
EMS SOFTWARE DOCUMENTATION
TABLE OF CONTENTS

CONTENTS		PAGES
Attachment 1	Effluent Management System Software Test Report for Seabrook Station, May 1994	C-3 Cover ii 1-11
Attachment 2	Resolutions of EMS Software Test Report Discrepancies	C-4 1-2
Attachment 3	Software Requirements Specification for North Atlantic Energy Service Corporation, Seabrook Station, Effluent Management Systems, Revision 04, FP 75486	C-5 1-35
Attachment 4	Technical Reference Manual, Effluent Management System NAESCO Seabrook Station, July 1994, FP 75486	C-6 36-93

APPENDIX C: EMS SOFTWARE DOCUMENTATION

ATTACHMENT 1: EFFLUENT MANAGEMENT SYSTEM SOFTWARE TEST REPORT FOR SEABROOK STATION, MAY 1994

EFFLUENT MANAGEMENT SYSTEM:
SOFTWARE TEST REPORT
FOR
SEABROOK STATION
MAY 1994

Prepared by Joseph Bisson 5/26/94
Date

Matthew J. Scannell 5/27/94
Date

Reviewed by Mark S. Strum 5-31-94
Date

Approved by [signature] 5/31/94
Date

Yankee Atomic Electric Company
Nuclear Services Division
580 Main Street
Bolton, Massachusetts 01740

Table of Contents

1.0 INTRODUCTION 1
1.1 Background 1
1.2 Acceptance Criteria 1

2.0 SUMMARY OF FINDINGS 2
2.1 EMS Dose and Dose Rate Conversion Factors 2
2.2 Liquid Release Testing 4
2.3 Gaseous Release Testing 4

3.0 TEST CONCLUSIONS 7

4.0 SUMMARY OF DISCREPANCIES 9

References 11

1.0 INTRODUCTION

Software testing as described in Reference [1] has been conducted for the Seabrook Station version of the Canberra Effluent Management System (EMS). The results and conclusions are presented in this report.

1.1 Background

Canberra Industries Inc. developed the EMS software to assist nuclear power plant personnel track effluent emissions and perform associated dose calculations. North Atlantic Energy Service Corporation purchased a Seabrook-specific version the Canberra EMS software which must meet specific requirements and incorporate site-specific information provided in the Offsite Dose Calculation Manual (ODCM) [2]. Software testing was conducted to provide assurances that the Seabrook EMS program produces results which are consistent with current ODCM assumptions and methods. All executions of the EMS program were performed at Seabrook Station on the target software. All executions of ODCM Method II were conducted at Yankee Atomic Electric Company in Bolton, Massachusetts.

1.2 Acceptance Criteria

The operability of the EMS software will be accepted if (i) information contained in the EMS data files is consistent with the ODCM, (ii) test results from the EMS program are consistent with results from ODCM methods, (iii) Technical Specifications requirements are met by the EMS software, and (iv) the EMS software meets design specifications.

Final user (Seabrook) acceptance is contingent on Seabrook approval of verification testing results and criteria established by user needs.

2.0 SUMMARY OF OBSERVATIONS

The EMS software testing included (i) identifying appropriate meteorological set up data, (ii) review of dose and dose rate conversion factor development, (iii) assessments for liquid releases, and (iv) assessments for gaseous releases. ODCM Method I was used initially to confirm dose results from the EMS program. However, the simplified nature of ODCM Method I made it difficult to change the values of various parameters or obtain meaningful comparisons (other than "bottom line" comparisons). The more adaptable ODCM method, Method II, was then used to confirm EMS doses. Observations made during the software testing are summarized below.

2.1 EMS Dose and Dose Rate Conversion Factors

The EMS software uses precalculated conversion factors which are contained in a data file. The dose conversion factors for both liquid and gaseous effluent releases were developed for four age groups (adult, teen, child and infant), and for specific organs (bone, liver, total body, kidney, lung, GI tract and skin). The liquid release dose conversion factors in the EMS program are the summation of the components for water recreation and ingestion of aquatic foods. The gaseous release dose conversion factors are exposure pathway-specific (e.g., inhalation, ground plane, milk ingestion, etc.).

Dose conversion factors are provided in the EMS program for all exposure pathways addressed in the ODCM. The development of all dose conversion factors in the EMS program followed the pathway-specific equations in the Effluent Management System Technical Reference Manual [3]. The EMS conversion factors for several radionuclides were examined to determined that the development process was consistent to the Technical Reference Manual and the ODCM.

2.1.1 Liquid Release Dose Conversion Factors

Although the individual components for the ingestion of aquatic foods were found to be consistent with the ODCM, a discrepancy was discovered in the water recreation component. The mixing ratio for shoreline activity used in the development of the EMS dose factors is equal to 0.025. While this value is inconsistent with ODCM Method I (which employs a mixing ratio of 0.1), it is consistent with ODCM Method II. It is identified as a discrepancy because it is unclear which set of ODCM assumptions (those for Method I or those for Method II) the EMS program is expected to adopt.

2.1.2 Gaseous Release Dose Conversion Factors

The EMS program uses dose conversion factors from Regulatory Guide 1.109 for assessment of noble gas releases. The dose factors in the EMS program were verified against and found to be consistent with Table B-1 of Regulatory Guide 1.109 [4].

The development methods for the other gaseous dose factors (i.e., for inhalation, ground plane, milk ingestion, meat ingestion, and ingestion of vegetables) were reviewed against applicable equations in the Technical Reference Manual and information in the ODCM. It is noted that the dose factors for ingestion of milk and meat are based on the fraction of year that animals are allowed to graze on pasture land (Fp) equal to 1.0. This is not consistent with the ODCM which calls for the use of an Fp value equal to 0.5.

The dose conversion factors in the EMS program for gaseous releases incorporate a shielding factor (SF) equal to 1.0. The EMS program is designed with a way of changing the value of SF (via use of the Options Table), but the factor is applied uniformly to both doses and dose rates. In contrast, the ODCM calls for the use of different values for SF in the calculations for doses and

dose rates.

2.2 Liquid Release Testing

Dose estimates from the EMS program for hypothetical liquid effluent discharges (containing single nuclide and radionuclide mixtures) are nearly identical to results from ODCM Method II when input data are based on the same mixing ratio value, indicating that the calculation method used in the EMS program is consistent with the ODCM. Additionally, the EMS routine(s) responsible for liquid effluent concentrations comparisons to MPC values and monitor set point determinations was observed to be operating properly.

2.3 Gaseous Release Testing

The agreement between estimates for total body dose rates, skin dose rates, and air (gamma and beta) doses due to emission of noble gases from the ODCM methods and the EMS program is excellent, indicating that the EMS calculation method is consistent with the ODCM.

There is also excellent agreement between inhalation doses from the EMS program and ODCM Method II indicating that, for the inhalation pathway, the calculational method and assumptions in the EMS program are consistent with those in the ODCM. The evaluation of the dose estimates via inhalation pathway included both long and short release durations for an elevated (mixed mode) and a ground level release point. The excellent agreement between the EMS and ODCM Method II also confirms that the release duration adjustment term, t^{-a}, is applied properly in the EMS program. However, an incorrect receptor location was reported on the EMS printout in the tests (D-2c and D-2d) in which the Plant Vent was changed to be recognized as a ground level release point.

Also noted during testing was that the EMS routine(s) responsible for calculating effluent concentration-to-MPC ratios and radionuclide release rates

appears to be operating properly for gaseous releases.

The EMS program incorporates the assumption that the fraction of elemental iodine is equal to 1.0 (consistent with NUREG-0133 [5]). In contrast, the fraction of elemental iodine is assumed equal to 0.5 in the ODCM methods (consistent with Regulatory Guide 1.109). Consequently, the EMS program produces dose estimates due to radioiodine that are at least a factor of two greater than doses from the ODCM methods. This difference increases to about a factor of 4 when the current values for Fp and SF assumed in the EMS program and ODCM methods are used in the dose calculations. The different assumptions for elemental iodine fractions should not present a problem because each program is based on NRC guidance: the EMS is based on NUREG-0133, the ODCM methods are based on Regulatory Guide 1.109. The EMS program takes the more conservative approach for determining doses from radioiodine.

Making appropriate adjustments for Fp, SF, and the fraction of elemental iodine (when radioiodine input was used) and comparing results for organ doses due to I131, H3, Co60 and Cs137 revealed that the calculational methods used in the EMS program are consistent with the ODCM for all exposure pathways (i.e., ground plane, inhalation, milk ingestion, meat ingestion, and vegetables ingestion).

Technical Specification 3.11.2.1 and the ODCM require the calculation of organ dose rates due to effluent discharges of I131, I133, H3 and particulates with a half-life greater than 8 days. However, in all test cases involving these types of nuclides, organ dose rate information did not appear on Page 4 of the EMS printout. Instead, the message "No calculations performed - check Sample & Receptors" appeared. The EMS set up data and input were reviewed with no apparent error identified. Since the test cases included Cs137, Co60, I131, and

H3, the missing dose rate information was unexpected. It is noted that organ dose rate information was provided on Page 4 of the EMS printout during a demonstration of the EMS program prior to testing.

3.0 TEST CONCLUSIONS

Although the dose conversion factors are based on information which is not completely consistent with the assumptions in the ODCM, the calculational methods used to determine doses from liquid and gaseous effluent discharges are consistent with the ODCM methods.

Other conclusions are:

1. As stated in Section 2.1.1, the development of the EMS liquid effluent dose factors is consistent with ODCM Method II, but not with Method I due to the mixing ratio value. If the EMS program is intended to be a hybrid method, the dose factors are consistent with the ODCM and are acceptable. On the other hand, if the EMS program is intended to provide automated ODCM Method I calculations, then the dose factor should be recalculated using a mixing ratio for shoreline activity equal to 0.1.

2. Since the EMS program is not designed to support the use of two shielding factors (one for dose rates and one for doses), use of a shielding factor equal to 1.0 is acceptable with the understanding that, although the dose rates produced by the EMS program will be consistent with the ODCM, the doses from the EMS program will be based on a more conservative assumption than doses from the ODCM methods.

3. Under the normal ODCM assumption for elemental iodine, the results from the EMS program will be at least a factor of two greater than results from the ODCM methods. The different assumptions regarding the elemental iodine fraction do not present a problem because each program is based on NRC guidance: the EMS program is based on NUREG-0133, and the ODCM is based on Regulatory Guide 1.109. Of the two methods, the EMS program takes the more conservative approach toward estimating doses from

radioiodine in gaseous effluent.

4. The radiation monitor set point determination method for liquid releases produces a set point value that is consistent the ODCM set point method.

5. The EMS routine that is responsible for comparison of liquid effluent concentrations and MPC values is operating properly.

6. The release duration adjustment term, t^{-a}, is used consistently to the ODCM.

4.0 SUMMARY OF DISCREPANCIES

Discrepancy	Area of Impact	Potential Solution(s)
Mixing ratio for shoreline activity used in EMS program.	Doses associated with liquid effluent discharges.	Clarify whether the EMS program is expected to follow ODCM assumptions for Method I or Method II. If determined to follow Method I, recalculate dose factors for liquid releases.
EMS dose factors based on Fp value which is not consistent with ODCM.	Doses due to ingestion of milk and meat.	Recalculate EMS dose factors for milk and meat ingestion pathways to incorporate Fp value consistent with the ODCM. Accept added conservatism in EMS in calculations of doses via milk and meat ingestion pathways.
Shielding factor (SF) applied uniformly to dose rates and doses in EMS program.	Doses associated with gaseous effluent discharges.	Accept use of SF = 1.0 and the added conservatism for doses. Modify EMS software to accommodate use of two values for SF (one for dose rates and one for doses).
Incorrect receptor location identified on EMS printout for ground level release point.	Potential assignment of doses to the wrong receptor.	Discuss with Canberra.
Assumed fraction of elemental iodine used in EMS program differs from ODCM methods.	Dose estimates due to iodine in gaseous effluents.	Accept added conservatism in doses due to iodine. Modify EMS software to use fraction for elemental iodine that is consistent with ODCM.

Discrepancy	Area of Impact	Potential Solution(s)
Missing organ dose rate information on EMS printout for effluent discharges containing I131, I133, H3, and particulates.	Technical Specification required dose rate not calculated.	Discuss with Canberra.

References

1. Yankee Atomic Electric Company, Effluent Monitoring System Software Test Plan for Seabrook Station, May, 1994.

2. NAESC, Station Offsite Dose Calculation Manual, Rev 13, 9/24/93.

3. Southern Nuclear Operating Company Effluent Management System Technical Reference Manual (07-0545), January 1993.

4. NRC Regulatory Guide 1.109, Calculation of Annual Doses to Man from Routine Releases of Reactor Effluents for the Purposes of Evaluating Compliance with 10CFR Part 50, Appendix I, Revision I, October 1977.

5. NRC NUREG-0133, Preparation of Radiological Effluent Technical Specifications for Nuclear Power Plants, October 1978.

ATTACHMENT 2: RESOLUTIONS OF EMS SOFTWARE TEST REPORT DISCREPANCIES

2. Resolution of EMS Software Test Report Discrepancies

The following discrepancy resolutions apply to the findings contained in the "Effluent Management System Test Report for Seabrook Station, May 1994" as noted on pages 9 and 10 (see Attachment #1 of Appendix C of the ODCM). With the positive resolution of the discrepancies identified in the EMS dose code, use of EMS as a computerized alternative approach (designated as Method IA in the ODCM) to determine compliance with the radioactive effluent dose and dose rate limits is acceptable since the results are comparable with the currently approved dose methods.

Discrepancy:

Mixing ratio for shoreline activity used in EMS Program not equal to the value used in the ODCM Method I (Mp = 1.0).

Resolution:

The mixing ratio for the shoreline activity pathway in the EMS is consistent with the ODCM Method II approved value of 0.025, and therefore does provide for a calculated dose that is within the parameters already approved in the ODCM. The use of the EMS code (ODCM Method IA) for calculating liquid doses is acceptable for determining compliance with the dose limits of the Technical Specifications without the need to modify the assumption used for the shoreline mixing ratio.

Discrepancy:

EMS dose factors based on Fp (fraction of year animals are on pasture) value which is not consistent with ODCM.

Resolution:

ODCM Method I assumes that the pasture season in the North East is 6 months long each year (Fp + 0.5). Method II allows for the pasture fraction to be set equal to 0.0 for the first and fourth quarters which equates the non-growing period of the year. The second and third quarters correspond to the growing season where the pasture fraction is assumed to be 1.0. The EMS software assumes an Fp value of 1.0 for animal grazing (meat and milk pathways) for all conditions. This is a moderately conservative approach compared to Method I and the off grazing season conditions modeled in Method II. It is equal to the grazing season assumptions of Method II as applied in the second and third quarters. As a result, the added conservatism in the EMS calculations for doses via milk and meat pathways are within acceptable margins and guidance provided in NRC NUREG-0133 for demonstrating compliance with Technical Specification dose limits. No changes to the EMS software are necessary.

Discrepancy:

Shielding factors (SF) applied uniformly to dose rates and doses in the EMS program.

2. Resolution of EMS Software Test Report Discrepancies (Continued)

Resolution:

The EMS program for gaseous releases incorporates a shielding factor (SF) equal to 1.0 for both dose rate and total dose determinations. In contrast, both Method I and II use a SF value of 1.0 instantaneous dose rate calculations, but a value of 0.7 for integrated doses based on assumptions in NRC Reg. Guide 1.109. The use of a SF equal to 1.0 for the external ground plane exposure pathway for both dose rate and total dose is a moderately conservative assumption that is within the bounds already assumed in the ODCM dose modeling. As a result, no modification to the EMS code as an acceptable approach (Method IA) for demonstrating compliance with Technical Specification dose/dose rate limits is required for SF.

Discrepancy:

Incorrect receptor location identified on EMS printout for ground level release point.

Resolution:

Incorrect name is identified on report with no impact on dose or dose rate calculations which were verified to be correct.

Discrepancy:

Assumed fraction of elemental iodine used in EMS program differs from ODCM Methods I and II.

Resolution:

For ODCM Methods I and II, the fraction of elemental iodine assumed for gaseous releases in 0.5 based on the guidance in NRC Reg. Guide 1.109. The EMS code assumes an elemental iodine fraction of 1.0 based on the guidance in NUREG-0133. Consequently, the EMS program (Method IA) will produce a moderately conservative estimate of dose impact (factor of 2) for iodine radionuclides if present in the release estimations when compared to existing approved methods. As a result, no modification to the EMS code is necessary for use in the ODCM for determining compliance with Technical Specification dose limits.

Discrepancy:

Missing organ dose rate information on EMS printout for effluent discharges containing I-131, I-133, H-3, and particulates.

Resolution:

This required information is easily obtainable from the permit closure process with flashing indication if any dose or dose rate limits are exceeded.

APPENDIX C: EMS SOFTWARE DOCUMENTATION

ATTACHMENT 3: SOFTWARE REQUIREMENTS SPECIFICATION FOR NORTH ATLANTIC ENERGY SERVICE CORPORATION, SEABROOK STATION, EFFLUENT MANAGEMENT SYSTEMS, REVISION 04, FP 75486

Software Requirements Specification
for
North Atlantic Energy Services Corporation
Seabrook Station
Effluent Management Systems
48-8448

Revision 04

Nuclear Data Systems Division Software Product

Originator: David J. Hanson WJW 9/15/93 Date: 9/14/93

Approved: Peter Vander Heide Date: 9/15-93
Engineering (CI/NDS)

Approved: Ronald Zink Date: 9/20/93
Quality Assurance Manager(CI/NDS)

Approved: Date: 10/29/93
Project Manager (Seabrook Station)

Revision History

Initials	Revision	Date	Description
DJH	00	2/26/93	Initial version
DJH	01	3/22/93	Updated incorrect dose equation
DJH	02	4/30/93	Updated to include all dose and dose rate equations
DJH	03	8/3/93	Updated based on modifications to software and customer's requested modification to the use of the default nuclide for gaseous permit processing.
DJH	04	9/14/93	Updated based on customer's request to remove modification to the default nuclide for gaseous permit processing.

		Page
1.	Scope	1
2.	Applicable Documents	1
3.	Interfaces	1
	3.1 Hardware	1
	3.2 Software	1
	3.3 Human	2
	3.4 Packaging	2
4.	Definitions	2
5.	Principal Changes from Existing Packages	2
6.	EMS Functionality	4
	6.1 Database Maintenance Transactions	4
	6.2 Editing Values through INGRES QBF	7
	6.3 Liquid Pre-Release Processing	8
	6.3.1 User Interface and Functionality	8
	6.3.2 Associated Reports	9
	6.3.3 Underlying Calculations	10
	6.4 Liquid Post-Release Processing	11
	6.4.1 User Interface and Functionality	11
	6.4.2 Associated Reports	12
	6.4.3 Underlying Calculations	12
	6.5 Liquid Permit Editing	13
	6.5.1 User Interface and Functionality	13
	6.5.2 Associated Reports	13
	6.5.3 Underlying Calculations	13
	6.6 Liquid Permit Deletion	13
	6.7 Gaseous Pre-Release Processing	14
	6.7.1 User Interface and Functionality	14
	6.7.2 Associated Reports	15
	6.7.3 Underlying Calculations	15
	6.8 Gaseous Post-Release Processing	21
	6.8.1 User Interface and Functionality	21
	6.8.2 Associated Reports	21
	6.8.3 Underlying Calculations	22
	6.9 Gaseous Permit Editing	27
	6.9.1 User Interface and Functionality	27
	6.9.2 Associated Reports	27
	6.9.3 Underlying Calculations	27
	6.10 Gaseous Permit Deletion	27
	6.11 Semi-Annual Reporting	28
	6.11.1 User Interface and Functionality	28
	6.11.2 EMS Trend Plots	30
	6.12 End-of-the-Year Data Archiving	30
	6.12.1 User Interface and Functionality	30

1. Scope

This document establishes the software requirements for the Effluent Management System (EMS) software to be installed at North Atlantic Energy Services Corporation's Seabrook Station.

2. Applicable Documents

2.1 The following two documents are included as part of this SRS, and this SRS refers to specific sections of them:

2.1.1 "Southern Nuclear Operating Company Effluent Management System Operator's Manual" (07-0544), Version 1, January 1993.

2.1.2 "Southern Nuclear Operating Company Effluent Management System Technical Reference Manual" (07-0545), Version 2, January 1993.

Note: The above documents contain material (including screens and report formats) imported from final manuals for other EMS packages. Utility and plant names shown on screens and reports in these manuals are not significant, since they are determined by database data that will be customized to fit the Seabrook Station's usage.

2.2 The following document is a reference source for calculation methods of the EMS software. This SRS may refer to specific sections.

2.2.1 "Seabrook Station Offsite Dose Calculation Manual," Revision 12, January 1993.

3. Interfaces

3.1 Hardware

The EMS software shall run on the following CPU model: DEC Microvax 3100, Model 80.

3.2 Software

The software shall be written under VMS version 5.4-2 or later, using INGRES version 6.4 or later. It shall be written in VAX/FORTRAN or VAX-DCL. Utility programs provided by INGRES that are installed on the hardware configuration may be used if applicable.

3.3 Human

The user may be expected to have received operator training from the system manager, Canberra/NDS, or the plant training department prior to using any part of the EMS software. Knowledge of INGRES or VMS shall not be assumed. The menus of operations are intended to be self-explanatory, but an Operator's Manual shall be developed.

The user may be expected to have enough knowledge of USNRC-regulated nuclear power plant effluent management to provide accurate and appropriate inputs, and to determine the validity of the software's results.

3.4 Packaging

A distribution kit will be produced for the customer. Any removable medium supported by the operating hardware delivered to the Seabrook Station is an acceptable distribution medium.

4. Definitions

EMS - Effluent Management System. Software for determining effluent monitor setpoints, tracking activity releases and dose impacts of individual releases, and generating semi-annual release reports.

SRS - Software Requirements Specification.

SNC - Southern Nuclear Operating Company

5. Principal Changes from Existing Package

The following paragraphs summarize the principal changes to the existing software that are required for the Seabrook Station system, and are intended only as introductory material. Specifics of the required Seabrook Station EMS functionality are presented in the following sections.

5.1 The EMS software will be developed by customizing the generic EMS package. In general, the most important changes from previous versions are as follows:

5.1.1 Modification to Gaseous Permit Processing to allow scaling of nuclides for Plant Vent Spike release point.

5.1.2 Modification of noble gas dose rate and dose calculation methods to use a third set of X/Q values.

5.1.3 Modification of noble gas dose rate and dose calculation methods to multiply X/Q and D/Q values by a factor depending on the release duration.

5.1.4 Modification to setpoint calculations to calculate setpoints for low gamma concentration releases.

5.1.5 Modification of Permit Processing to automatically correct the expected waste flow if it is greater than the calculated maximum waste flow.

5.1.6 Modification of Liquid Permit Processing to determine dilution flow rate based on the number of pumps operating.

5.1.7 Modification of the permit reports to include Month-to-Date Cumulative Doses and Alert Setpoints.

5.1.8 Modification of Post-Release Permit Processing to update the monitor response.

5.1.9 Addition of data to database to support and control the above operations.

6. EMS Functionality

6.1 Database Maintenance Transactions

The functionality of the EMS Database Maintenance transactions shall be described in section 2 of the EMS Operator's Manual (Reference 2.1.1), with the following revisions:

6.1.1 On the Release Point Setpoint transaction [EM-DM-RP (Form 2)], and the Discharge Point Setpoint transaction [EM-DM-DP (Form 2)], the following parameter shall be added to the list of those which can be entered, stored, and which appear on the printed report for these transactions:

- SCAL_NUC: For a gaseous release, a flag to denote that this release point will have nuclide concentrations scaled so that the total concentration matches a value entered by the user.

6.1.2 On the Release Point Setpoint transaction [EM-DM-RP (Form 2)] and the Discharge Point Setpoint transaction [EM-DM-DP (Form 2)], the following parameter shall be added to the list of those which can be entered, stored, and which appear on the printed report for these transactions:

- DILOOKUP: For a liquid release, a flag to denote that permits for this release point will have a selection screen appear for the user to select the proper dilution flow for the release based on the number of pumps operating.

6.1.3 On the Release Point Setpoint transaction [EM-DM-RP (Form 2)], and the Discharge Point Setpoint transaction [EM-DM-DP (Form 2)], the following parameter shall be added to the list of those which can be entered, stored, and which appear on the printed report for these transactions:

- DEF_NUC: For a liquid or gaseous release, this parameter will contain the default nuclide that will be used in setpoint calculations for low gamma concentration releases. This parameter is used in conjunction with the DEF_CONC parameter.

6.1.4 On the Release Point Setpoint transaction [EM-DM-RP (Form 2)], and the Discharge Point Setpoint transaction [EM-DM-DP (Form 2)], the following parameter shall be added to the list of those which can be entered, stored, and which appear on the printed report for these transactions:

- DEF_CONC: For a liquid or gaseous release, this parameter will contain the default concentration that will be used in setpoint calculations for low gamma concentration releases. This parameter is used in conjunction with the DEF_NUC parameter.

6.1.5 On the Release Point Setpoint transaction [EM-DM-RP (Form 2)], and the Discharge Point Setpoint transaction [EM-DM-DP (Form 2)], the following parameter shall be added to the list of those which can be entered, stored, and which appear on the printed report for these transactions:

- DEF_TYPE: For a liquid or gaseous release, this parameter will contain the default nuclide type that will be used in setpoint calculations for low gamma concentration releases. This parameter is used in conjunction with the DEF_NUC and DEF_CONC parameters. (Note: For a gaseous release, the default nuclide type shall determine which monitor setpoint should use the default nuclide and concentration.)

6.1.6 On the Release Point Setpoint transaction [EM-DM-RP (Form 2)], and the Discharge Point Setpoint transaction [EM-DM-DP (Form 2)], the following parameter shall be added to the list of those which can be entered, stored, and which appear on the printed report for these transactions:

- ALRT_SET: For a liquid or gaseous release, this parameter will contain the multiplier to be used in the calculation of Alert Alarm Setpoints for permit reports.

6.1.7 On the Release Point transaction [EM-DM-RP (Form 1)], the meaning of the Response Option will change. When set to "Y", this option will denote the display of a Monitor Response window during the Post-Release Permit Processing, rather than during the Pre-Release Permit Processing. The Response Option parameter, itself, will remain unchanged for this transaction, but the response entered should include the monitor background values.

6.1.8 On the Dilution Streams transaction [EM-DM-DS], the following parameters will be removed: the number of extra dilution flow rates and the four dilution flow rates.

These parameters will be replaced with two column fields. One column will contain the dilution flow rate, while another will contain the pump configuration description (such as "Jockey Pump" or "5"). In this transaction, the dilution flow rate for particular pump configuration can be added.

6.1.9 On the Meteorological Data transaction [EM-DM-ME (Form 1)], several menu options will added to the list of MET DATA TABLES. These additional menu items are as follows:

X/Q - Noble Gases (Gamma)
"a" Factor - D/Q-Part/Iodines
"a" Factor - Noble Gases
"a" Factor - X/Q-Part/Iodines
"a" Factor - Gamma Noble Gases

6.1.10 On the Meteorological Data transaction [EM-DM-ME (Form 1)], the following menu items will be used to store short-term (1 hour) D/Q and X/Q values.

D/Q - Partics/Radioiodines
X/Q - Partics/Radioiodines
X/Q - Decayed Noble Gases
X/Q - Noble Gases (Gamma)

Note: This specification item only denotes a change in the meaning for the values on this transaction and requires no further changes to the software.

6.1.11 On the Meteorological Data transaction [EM-DM-ME (Form 1)], the X/Q, D/Q, and "a" Factor values are defined for various elevations, distances, and directions from the plant vent or stack. This combination with the "mode of release" parameter on the Release Point transaction [EM-DM-RP (Form 1)], and the receptor definition on the Gas Receptors transaction [EM-DM-GR], allow the X/Q, D/Q, and "a" factors to be different for each receptor and/or release point.

Note: This specification item is only for clarification and no additional code changes need to be made to this transaction.

page 9

6.2 Editing Values through INGRES QBF

In addition to the interactive forms-based EMS Database Maintenance transactions, certain flags and values must be edited through INGRES QBF on the database tables which contain data not accessible through the forms-based transactions.

6.2.1 Some columns of the Quarterly Dilution Volume table (QDVOL), which has no other use in the Seabrook Station version of EMS, will be used for recording monthly dilution volume for use in semi-annual reports. Once per month, an authorized user will use QBF to append a record to the QDVOL table as follows:

sampleid	(sample ID)	0 [not used]
dvdate	(dilution volume date)	The first day of the month to which the volume applies (time not required).
tvol	(total volume)	Dilution volume for the month, in user units.
aflow	(average flowrate)	0 [not used]

6.3 Liquid Pre-Release Processing

6.3.1 User Interface and Functionality

Liquid Pre-Release Processing functionality for the EMS software shall be as described in section 3 of the EMS Operator's Manual (Reference 2.1.1), with the following revisions:

6.3.1.1 On the Liquid Permit Definition Screen (Screen 3.04):

Upon entering the permit definition screen, if the DILOOKUP parameter is set to "Y" for the release point associated with the current permit being processed, the Dilution Flow Rate parameter will default to zero.

If a user uses the "Tab" or "Return" key to exit the Dilution Flow Rate parameter on the Permit Definition Screen and the Dilution Flow Rate parameter has a value of zero, a selection screen with two columns of data will appear. One column will contain the pump configuration description, while the other will contain the dilution flow rate for each associated pump configuration.

Upon selection of the Dilution Flow Rate, the selection screen will disappear and the selected dilution flow rate will appear in the Dilution Flow Rate parameter on the Permit Definition Screen. The cursor will then automatically advance to the Dilution Volume Parameter.

6.3.1.2 On the Liquid Permit Definition Screen (Screen 3.04):

When a "Fill" (F14) or a "Save" (F10) without a "Fill" is executed, if the DILOOKUP parameter is set to "Y" for the release point associated with the current permit being processed and the Dilution Flow Rate parameter is set to zero, a selection screen, as described above will appear.

Once a selection of the Dilution Flow Rate is complete, the selection screen will disappear and the "Fill" operation will continue. Upon completion, the selected dilution flow rate will appear in the Dilution Flow Rate parameter on the Permit Definition Screen.

If the Dilution Flow Rate parameter on the Permit Definition Screen is not set to zero and the DILOOKUP parameter is set to "Y", the fill will proceed as normal <u>without</u> the dilution flow rate selection screen appearing.

6.3.1.3 Prior to entering the Liquid Permit Approval Screen (Screen 3.09):

If it is determined that the computed maximum waste flow is less than the anticipated waste flow, the anticipated waste flow will be changed to have the value of the computed maximum waste flow. If the anticipated waste flow is modified, setpoint, dose, and dose rate values will be recalculated based on the new value.

6.3.1.4 For releases with low or zero gamma emitter concentrations that result in a pre-diluted MPC ratio less than 10%, a default concentration will be used for setpoint calculations. This default concentration will not be used for updating curie, dose rates, or dose totals.

The default nuclide will be attained from the DEF_NUC parameter. The default concentration for this nuclide will be attained from the DEF_CONC parameter. The default type for this nuclide should be attained from the DEF_TYPE parameter.

6.3.1.5 The Monitor Response Screens for Release Points and Discharge Points (Screen 3.08) will no longer appear while processing a Pre-Release Permit when the Response Option is set to "Y" on the Release Point transaction [EM-DM-RP (Form 1)].

6.3.2 Associated Reports

Liquid Pre-Release Permit Reports shall be as described in section 3 (pages 3-53 through 3-58) of the EMS Operator's Manual (Reference 2.1.1), with the following revisions:

6.3.2.1 On the Pre-Release Permit Report (3.01), the Cumulative Month-to-Date Doses will appear on the page with the report category of Cumulative Maximum Individual Dose for Controlling Age Group at Controlling Location. The Month-to-Date dose values will contain the summation of the doses for all "Open" and "Closed" permits including the permit for which the report is being generated. These dose values will appear immediately below the "This Release" row of doses.

6.3.2.2 On the Pre-Release Permit Report (3.01), an Alert Alarm Setpoint will appear below the Max Monitor Setpoint Value. The Alert Alarm Setpoint will be calculated by using the multiplying the release point setpoint value by a multiplier specified with the ALRT_SET parameter mentioned above.

6.3.2.3 On the Liquid Special Report (3.02), an Alert Alarm Setpoint will appear below the Release Point and Discharge Point Setpoint values in the Radiation Monitor(s) portion of the report.

6.3.2.4 On the Pre-Release Permit Report (3.01), the calculation of setpoint data for additional dilution flow rates (under Pre-Release Calculations) will use dilution flow rate values from the Dilution Streams transaction [EM-DM-DS] for a specific dilution stream. Up to four dilution flow rates which are larger than the dilution flow rate parameter entered on the Liquid Permit Definition Screen (3.06) will be used.

6.3.3 Underlying Calculations

The calculations performed by the EMS software for Liquid Pre-Release Permits shall produce the same results as those described in Chapter 2 (sections 2.1-2.6) of the EMS Technical Reference Manual (Reference 2.1.2), with no revisions.

6.4 Liquid Post-Release Processing

6.4.1 User Interface and Functionality

Liquid Post-Release Processing functionality for the EMS software shall be as described in section 3 of the EMS Operator's Manual (Reference 2.1.1), with the following revisions:

6.4.1.1 On the Liquid Permit Definition Screen (Screen 3.13):

If the DILOOKUP parameter is set to "Y" for the release point and a user uses the "Tab" or "Return" key to exit the Dilution Flow Rate parameter on the Permit Definition Screen and the Dilution Flow Rate parameter has a value of zero, a selection screen with two columns of data will appear. One column will contain the pump configuration description, while the other will contain the dilution flow rate for each associated pump configuration.

Upon selection of the Dilution Flow Rate, the selection screen will disappear and the selected dilution flow rate will appear in the Dilution Flow Rate parameter on the Permit Definition Screen. The cursor will then automatically advance to the Dilution Volume Parameter.

6.4.1.2 On the Liquid Permit Definition Screen (Screen 3.13):

When a "Fill" (F14) or a "Save" (F10) without a "Fill" is executed, if the DILOOKUP parameter is set to "Y" for the release point associated with the current permit being processed and the Dilution Flow Rate parameter is set to zero, a selection screen, as described above will appear.

Once a selection of the Dilution Flow Rate is complete, the selection screen will disappear and the "Fill" operation will continue. Upon completion, the selected dilution flow rate will appear in the Dilution Flow Rate parameter on the Permit Definition Screen.

If the Dilution Flow Rate parameter on the Permit Definition Screen is not set to zero and the DILOOKUP parameter is set to "Y", the fill will proceed as normal <u>without</u> the dilution flow rate selection screen appearing.

6.4.1.3 (Item removed since actual waste flow is known at time of post release processing.)

6.4.1.4 The Monitor Response Screens for Release Points and Discharge Points (Screen 3.08) will appear while processing a Post-Release Permit when the Response Option is set to "Y" on the Release Point transaction [EM-DM-RP (Form 1)]. These screens will appear following the Nuclide Concentration Screen (Screen 3.15). The monitor response values entered should include the monitor background values.

6.4.2 Associated Reports

Liquid Post-Release Permit Report shall be as described in section 3 (pages 3-59 through 3-62 of the EMS Operator's Manual (Reference 2.1.1), with the following revisions:

6.4.2.1 On the Post-Release Permit Report (3.03), the Cumulative Month-to-Date Doses will appear on the page with the report category of Cumulative Maximum Individual Dose for Controlling Age Group at Controlling Location. The Month-to-Date dose values will contain the summation of the doses for all "Open" and "Closed" permits including the permit for which the report is being generated. These dose values will appear immediately below the "This Release" row of doses.

6.4.3 Underlying Calculations

The calculations performed by the EMS software for Liquid Post-Release Permits shall produce the same results as those described in Chapter 2 (section 2.7) of the EMS Technical Reference Manual (Reference 2.1.2), with no revisions.

6.5 Liquid Permit Editing

6.5.1 User Interface and Functionality

Functionality for editing liquid permits through the EMS software shall be as described in section 3 of the EMS Operator's Manual (Reference 2.1.1), with the following revisions:

The appearance and functionality of the liquid permit definition screen and the monitor response screen shall be modified as described for the Pre-Release stage in sections 6.3.1 and 6.4.1 above.

6.5.2 Associated Reports

The permit report format and contents for edited open and closed liquid permits shall be as specified above for original permit reports, in sections 6.3.2 and 6.4.2, respectively.

6.5.3 Underlying Calculations

The calculation methods for editing open and closed liquid permits shall be as specified above for original calculations, in sections 6.3.3 and 6.4.3, respectively.

6.6 Liquid Permit Deletion

Functionality for deleting liquid permits through the EMS software shall be described section 3 or the EMS operator's Manual (Reference 2.1.1).

6.7 Gaseous Pre-Release Processing

6.7.1 User Interface and Functionality

Gaseous Pre-Release Processing functionality for the EMS software shall be as described in section 4 of the EMS Operator's Manual (Reference 2.1.1), with the following revisions:

6.7.1.1 On the Gaseous Permit Definition Screen (Screen 4.05):

The Initial Pressure and Final Pressure parameters shall be deleted.

6.7.1.2 On the Gaseous Nuclide Concentration Screen (Screen 4.06):

If the SCAL_NUC parameter is set to "Y", when exiting the Concentration Screen by hitting "Process" (Do), the user will be prompted for the total nuclide concentration of permit. The concentrations are then "scaled" and then stored internally. As a result, the concentrations displayed on the screen will remain unchanged. (See the Underlying Calculations section for Pre-Release Permit Processing for an explanation of the "scaling" of concentrations.)

NOTE: This method requires the VAX_GSP (F12) file transfer has occurred bringing the representative nuclide concentration values to the screen prior to "Save" of data.

6.7.1.3 For releases with low or zero gamma emitter concentrations that result in a pre-diluted MPC ratio less than 10%, a default concentration will be used for setpoint calculations. This default concentration will not be used for updating curie, dose rates, or dose totals.

The default nuclide will be attained from the DEF_NUC parameter. The default concentration for this nuclide will be attained from the DEF_CONC parameter. The default type for the default nuclide should be attained from the DEF_TYPE parameter.

6.7.1.4 The Monitor Response Screens for Release Points and Discharge Points (Screen 4.08) will no longer appear while processing a Pre-Release Permit when the Response Option is set to "Y" on the Release Point transaction [EM-DM-RP (Form 1)].

6.7.1.5 Prior to entering the Gaseous Permit Approval Screen (Screen 4.09):

If it is determined that the computed maximum waste flow is less than the anticipated waste flow, the anticipated waste flow will be changed to have the value of the computed maximum waste flow. If the anticipated waste flow is modified, setpoint, dose, and dose rate values will be recalculated based on the new value.

6.7.2 Associated Reports

Gaseous Pre-Release Permit Reports shall be as described in section 4 (pages 4-49 through 4-58) of the EMS Operator's Manual (Reference 2.1.1), with the following revisions:

6.7.2.1 On the Pre-Release Permit Report (4.01), the Cumulative Month-to-Date Doses will appear on the pages with the report category of Cumulative Dose at Site Boundary and Cumulative Maximum Individual Dose for Controlling Age Group at Controlling Location. The Month-to-Date dose values will contain the summation of the doses for all "Open" and "Closed" permits including the permit for which the report is being generated. These dose values will appear immediately below the "This Release" row of doses.

6.7.2.2 On the Pre-Release Permit Report (4.01), the "scaled" noble gas concentrations shall appear on the Isotopic Identification page of the report if the SCAL_NUC parameter is set to "Y" for the release point where the release is being made.

6.7.2.3 On the Pre-Release Permit Report (4.01), the Noble Gas Alert Alarm Setpoint will appear below the Max Monitor Setpoint values. The Alert Alarm Setpoint will be calculated by multiplying the noble gas monitor setpoint value by a multiplier specified with the ALRT_SET parameter mentioned above.

6.7.2.4 On the Gaseous Special Report (4.02), the Noble Gas Alert Alarm Setpoint will appear below the Release Point and Discharge Point Setpoint values in the Radiation Monitor(s) portion of the report. It will be calculated as mentioned above.

6.7.2.5 On the Pre-Release Permit Report (4.01), the Initial and Final Pressure parameters will be removed from the Pre-Release Data section of page one of the report.

6.7.3 Underlying Calculations

The calculations performed by the EMS software for Gaseous Pre-Release Permits shall produce the same results as those described in Chapter 3 (section 3.1-3.6) of the EMS Technical Reference Manual (Reference 2.1.2), with the following revisions and clarifications:

6.7.3.1 Dose Calculations will appear in the site specific technical reference manual as follows:

- For Noble Gas Total Body Dose Rate (for vents or stacks < 80 meters):

$$D_t = shf \cdot X/Q_g \cdot 8760^{-a} \cdot F_o \cdot \Sigma (K_i \cdot QR_{iv})$$

where

D_t = the total body dose rate due to gamma emissions by noble gas releases from vent v (mrem/yr)

shf = shielding factor (dimensionless)

QR_{iv} = release rate of noble gas radionuclides, i, in gaseous effluents from vent or stack v (μCi/sec).

F_o = occupancy factor defined for the receptor at the given location (dimensionless)

K_i = total body dose factor due to gamma emissions for noble gas radionuclide i (mrem/yr per $\mu Ci/m^3$)

X/Q_g = highest value of the noble gas 1-hour X/Q for gamma radiation for vent or stack v at the site boundary, (sec/m^3)

8760^{-a} = adjustment factor used to convert the 1-hour X/Q value to an average 1 year X/Q value (dimensionless)

where

8760 = number of hours in a year

a = "a" factor for gamma noble gas X/Q

- For Noble Gas Total Body Dose (for vents or stacks < 80 meters):

$$D_{tb} = \frac{shf \cdot F_o \cdot \Sigma (K_i \cdot QR_{iv}) \cdot X/Q_g \cdot t^{-a}}{(5.256 \cdot 10^5 / dur)}$$

where

D_{tb} = total body dose from gaseous effluents (mrem)

$5.256 \cdot 10^5$ = number of minutes in a year

dur = duration of the release (minutes)

t^{-a} = adjustment factor to convert the 1-hour X/Q value to the short term X/Q value for the release (dimensionless)

where

t = duration of release (hours)

a = "a" factor for gamma noble gas X/Q

- For Noble Gas Skin Dose Rate (for vents or stacks < 80 meters):

$$D_s = shf \cdot F_o \cdot \Sigma\, QR_{iv} \cdot [(L_i \cdot X/Q \cdot 8760^{-b}) + (1.11 M_i \cdot X/Q_g \cdot 8760^{-a})]$$

where

D_s = skin dose rate from gaseous effluents (mrem/yr)

X/Q = highest value of the noble gas 1-hour X/Q for vent or stack v at the site boundary (sec/m^3)

M_i = air dose factor due to gamma emissions for noble gas radionuclide i (mrad/yr per $\mu Ci/m^3$)

1.11 = conversion factor from mrad to mrem

L_i = skin dose factor due to beta emissions for noble gas radionuclide i (mrem/yr per $\mu Ci/m^3$)

b = "a" factor for noble gas X/Q

- For Noble Gas Skin Dose (for vents or stacks < 80 meters):

$$D_{sk} = \frac{shf \cdot F_o \cdot \Sigma\, QR_{iv} \cdot [(L_i \cdot X/Q \cdot t^{-b}) + (1.11 M_i \cdot X/Q_g \cdot t^{-a})]}{(5.256 \cdot 10^5 / dur)}$$

where

D_{sk} = total skin dose from gaseous effluents (mrem)

- For Noble Gas Air Dose due to gamma radiation (for vents or stacks < 80 meters):

$$D_\gamma = (3.17 \cdot 10^{-8}) \cdot X/Q_g \cdot t^{-a} \cdot F_o \cdot \Sigma M_i \cdot Q_{iv}$$

where

D_γ = total gamma air dose from gaseous effluents (mrad)

$3.17 \cdot 10^{-8}$ = inverse of number of seconds in a year

Q_{iv} = release of noble gas radionuclides, i, in gaseous effluents from vent or stack v (μCi)

$$Q_{iv} = QR_{iv} \cdot dur \cdot 60$$

where

60 = number of seconds in a minute

- For Noble Gas Air Dose due to beta radiation (for vents or stacks < 80 meters):

$$D_\beta = (3.17 \cdot 10^{-8}) \cdot X/Q \cdot t^{-b} \cdot F_o \cdot \Sigma N_i \cdot Q_{iv}$$

where

D_β = total beta air dose from gaseous effluents (mrad)

N_i = air dose factor due to beta emissions for noble gas radionuclide i (mrad/yr per $\mu Ci/m^3$)

- For Critical Organ Dose Rate–Inhalation Pathway and all Pathways for H-3, C-14 (for vents or stacks < 80 meters):

$$DR_{\tau a} = X/Q_r \cdot 8760^{-c} \cdot \Sigma P_{ip\tau a} \cdot QR_{iv}$$

where

$DR_{\tau a}$ = dose rate for age group a and organ τ from iodines and particulates with half lives greater than 8 days in gaseous effluents (mrem/yr)

$P_{ip\tau a}$ = dose factor for each radionuclide i, pathway p, organ τ, and age group a (mrem/yr per $\mu Ci/m^3$)

X/Q_r = highest value of the radioiodine/particulate 1-hour X/Q for vent or stack v at the site boundary (sec/m^3)

c = "a" factor for Radioiodine/Particulate X/Q

Note: It is assumed $P_{ip\tau a}$ will not contain long term X/Q or D/Q values.

- For Critical Organ Dose Rate--Ground and Food Pathways (for vents or stacks < 80 meters):

$$DR_{\tau a} = D/Q \cdot 8760^{-d} \cdot \Sigma R_{ip\tau a} \cdot QR_{iv}$$

where

D/Q = highest value of the 1-hour deposition factor at the distance of the site boundary ($1/m^2$)

d = "a" factor for D/Q

$R_{ip\tau a}$ = dose factor for each radionuclide i, pathway p, organ τ, and age group a (m^2 • mrem/yr per μCi/sec)

Note: It is assumed $R_{ip\tau a}$ will not contain long term X/Q or D/Q values.

- For Critical Organ Dose-Inhalation Pathway and all Pathways for H-3, C-14 (for vents or stacks < 80 meters):

$$D_{\tau a} = (3.17 \cdot 10^{-8}) \cdot X/Q_r \cdot t^{-c} \cdot F_o \cdot \Sigma P_{ip\tau a} \cdot Q_{iv}$$

where

$D_{\tau a}$ = dose for age group a and organ τ from iodines and particulates with half lives greater than 8 days in gaseous effluents (mrem)

Note: It is assumed $P_{ip\tau a}$ will not contain long term X/Q or D/Q values.

- For Critical Organ Dose-Ground and Food Pathways (for vents or stacks < 80 meters):

$$D_{\tau a} = (3.17 \cdot 10^{-8}) \cdot D/Q \cdot t^{-d} \cdot F_o \cdot \Sigma R_{ip\tau a} \cdot Q_{iv}$$

Note: It is assumed $R_{ip\tau a}$ will not contain long term X/Q or D/Q values.

6.7.3.2 On the Nuclide Concentration Screen (Screen 4.06), nuclide concentrations will be "scaled" if the SCAL_NUC parameter is set properly for a Release Point. This "scaling" is described as follows:

$$C_{inew} = (t / s) \cdot C_i$$

where

C_{inew} = concentration (after "scaling") of nuclide$_i$
s = sum of all nuclide concentrations on the Nuclide Concentration Screen.
t = total nuclide concentration entered by the user
C_i = concentration (before "scaling") of nuclide$_i$

6.8 Gaseous Post-Release Processing

6.8.1 User Interface and Functionality

Gaseous Post-Release Processing functionality for the EMS software shall be as described in section 4 of the EMS Operator's Manual (Reference 2.1.1), with the following revisions:

6.8.1.1 On the Gaseous Permit Definition Screen (Screen 4.14):

The Initial Pressure and Final Pressure parameters shall be deleted.

6.8.1.2 On the Gaseous Nuclide Concentration Screen (Screen 4.15):

If the SCAL_NUC parameter is set to "Y", when exiting the Concentration Screen by hitting "Process" (Do), the user will be prompted for the total nuclide concentration of permit. The value entered for the total nuclide concentration while opening the permit shall be displayed as a default value which can be modified. Once the value is entered/accepted the concentrations are then "scaled" and then stored internally. As a result, the concentrations displayed on the screen will remain unchanged. (See the Underlying Calculations section for Post-Release Permit Processing for an explanation of the "scaling" of concentrations.)

NOTE: This method requires the VAX_GSP (F12) file transfer has occurred bringing the representative nuclide concentration values to the screen prior to "Save" of data.

6.8.1.3 The Monitor Response Screens for Release Points and Discharge Points (Screen 4.08) will appear while processing a Post-Release Permit when the Response Option is set to "Y" on the Release Point transaction [EM-DM-RP (Form 1)]. These screens will appear following the Nuclide Concentration Screen (Screen 4.15). The monitor response values should include the monitor background values.

6.8.1.4 (Item removed since actual waste flow is known at time of post release processing.)

6.8.2 Associated Reports

Gaseous Post-Release Permit Reports shall be as described in section 4 (pages 4-58 through 4-63) of the EMS Operator's Manual (Reference 2.1.1), with the following revisions:

6.8.2.1 On the Post-Release Permit Report (4.03), the Cumulative Month-to-Date Doses will appear on the pages with the report category of Cumulative Dose at Site Boundary and Cumulative Maximum Individual Dose for Controlling Age Group at Controlling Location. The Month-to-Date dose values will contain the summation of the doses for all "Open" and "Closed" permits including the permit for which the report is being generated. These dose values will appear immediately below the "This Release" row of doses.

6.8.2.2 On the Post-Release Permit Report (4.03), the "scaled" noble gas concentrations shall appear on the Isotopic Identification page of the report if the SCAL_NUC parameter is set to "Y" for the release point where the release is being made.

6.8.2.3 On the Post-Release Permit Report (4.03), the Initial and Final Pressure parameters will be removed from the Pre-Release Data section of page one of the report.

6.8.3 Underlying Calculations

The calculations performed by the EMS software for Gaseous Post-Release Permits shall produce the same results as those described in Chapter 3 (section 3.7) of the EMS Technical Reference Manual (Reference 2.1.2), with the following revisions and clarifications:

6.8.3.1 Dose Calculations will appear in the site specific technical reference manual as follows:

- For Noble Gas Total Body Dose Rate (for vents or stacks < 80 meters):

$$D_t = shf \cdot X/Q_g \cdot 8760^{-a} \cdot F_o \cdot \Sigma (K_i \cdot QR_{iv})$$

where

D_t = the total body dose rate due to gamma emissions by noble gas releases from vent v (mrem/yr)

shf = shielding factor (dimensionless)

QR_{iv} = release rate of noble gas radionuclides, i, in gaseous effluents from vent or stack v (μCi/sec).

F_o = occupancy factor defined for the receptor at the given location (dimensionless)

K_i = total body dose factor due to gamma emissions for noble gas radionuclide i (mrem/yr per $\mu Ci/m^3$)

X/Q_g = highest value of the noble gas 1-hour X/Q for gamma radiation for vent or stack v at the site boundary, (sec/m^3)

8760^{-a} = adjustment factor used to convert the 1-hour X/Q value to an average 1 year X/Q value (dimensionless)

where

8760 = number of hours in a year

a = "a" factor for gamma noble gas X/Q

- For Noble Gas Total Body Dose (for vents or stacks < 80 meters):

$$D_{tb} = \frac{shf \cdot F_o \cdot \Sigma (K_i \cdot QR_{iv}) \cdot X/Q_g \cdot t^{-a}}{(5.256 \cdot 10^5 / dur)}$$

where

D_{tb} = total body dose from gaseous effluents (mrem)

$5.256 \cdot 10^5$ = number of minutes in a year

dur = duration of the release (minutes)

t^{-a} = adjustment factor to convert the 1-hour X/Q value to the short term X/Q value for the release (dimensionless)

where

t = duration of release (hours)

a = "a" factor for gamma noble gas X/Q

- For Noble Gas Skin Dose Rate (for vents or stacks < 80 meters):

$$D_s = shf \cdot F_o \cdot \Sigma QR_{iv} \cdot [(L_i \cdot X/Q \cdot 8760^{-b}) + (1.11 M_i \cdot X/Q_g \cdot 8760^{-a})]$$

where

D_s = skin dose rate from gaseous effluents (mrem/yr)

X/Q = highest value of the noble gas 1-hour X/Q for vent or stack v at the site boundary (sec/m^3)

M_i = air dose factor due to gamma emissions for noble gas radionuclide i (mrad/yr per $\mu Ci/m^3$)

1.11 = conversion factor from mrad to mrem

L_i = skin dose factor due to beta emissions for noble gas radionuclide i (mrem/yr per $\mu Ci/m^3$)

b = "a" factor for noble gas X/Q

- For Noble Gas Skin Dose (for vents or stacks < 80 meters):

$$D_{sk} = \frac{shf \cdot F_o \cdot \Sigma\, QR_{iv} \cdot [(L_i \cdot X/Q \cdot t^{-b}) + (1.11 M_i \cdot X/Q_g \cdot t^{-a})]}{(5.256 \cdot 10^5 / dur)}$$

where

D_{sk} = total skin dose from gaseous effluents (mrem)

- For Noble Gas Air Dose due to gamma radiation (for vents or stacks < 80 meters):

$$D_\gamma = (3.17 \cdot 10^{-8}) \cdot X/Q_g \cdot t^{-a} \cdot F_o \cdot \Sigma\, M_i \cdot Q_{iv}$$

where

D_γ = total gamma air dose from gaseous effluents (mrad)

$3.17 \cdot 10^{-8}$ = inverse of number of seconds in a year

Q_{iv} = release of noble gas radionuclides, i, in gaseous effluents from vent or stack v (μCi)

$Q_{iv} = QR_{iv} \cdot dur \cdot 60$

where

60 = number of seconds in a minute

- For Noble Gas Air Dose due to beta radiation (for vents or stacks < 80 meters):

$$D_\beta = (3.17 \cdot 10^{-8}) \cdot X/Q \cdot t^{-b} \cdot F_o \cdot \Sigma N_i \cdot Q_{iv}$$

where

D_β = total beta air dose from gaseous effluents (mrad)

N_i = air dose factor due to beta emissions for noble gas radionuclide i (mrad/yr per $\mu Ci/m^3$)

- For Critical Organ Dose Rate--Inhalation Pathway and all Pathways for H-3, C-14 (for vents or stacks < 80 meters):

$$DR_{\tau a} = X/Q_r \cdot 8760^{-c} \cdot \Sigma P_{ip\tau a} \cdot QR_{iv}$$

where

$DR_{\tau a}$ = dose rate for age group a and organ τ from iodines and particulates with half lives greater than 8 days in gaseous effluents (mrem/yr)

$P_{ip\tau a}$ = dose factor for each radionuclide i, pathway p, organ τ, and age group a (mrem/yr per $\mu Ci/m^3$)

X/Q_r = highest value of the radioiodine/particulate 1-hour X/Q for vent or stack v at the site boundary (sec/m^3)

c = "a" factor for Radioiodine/Particulate X/Q

Note: It is assumed $P_{ip\tau a}$ will not contain long term X/Q or D/Q values.

- For Critical Organ Dose Rate--Ground and Food Pathways (for vents or stacks < 80 meters):

$$DR_{\tau a} = D/Q \cdot 8760^{-d} \cdot \Sigma R_{ip\tau a} \cdot QR_{iv}$$

where

D/Q = highest value of the 1-hour deposition factor at the distance of the site boundary ($1/m^2$)

d = "a" factor for D/Q

$R_{ip\tau a}$ = dose factor for each radionuclide i, pathway p, organ τ, and age group a (m^2 • mrem/yr per μCi/sec)

Note: It is assumed $R_{ip\tau a}$ will not contain long term X/Q or D/Q values.

- For Critical Organ Dose-Inhalation Pathway and all Pathways for H-3, C-14 (for vents or stacks < 80 meters):

$$D_{\tau a} = (3.17 \cdot 10^{-8}) \cdot X/Q_r \cdot t^{-c} \cdot F_o \cdot \Sigma P_{ip\tau a} \cdot Q_{iv}$$

where

$D_{\tau a}$ = dose for age group a and organ τ from iodines and particulates with half lives greater than 8 days in gaseous effluents (mrem)

Note: It is assumed $P_{ip\tau a}$ will not contain long term X/Q or D/Q values.

- For Critical Organ Dose-Ground and Food Pathways (for vents or stacks < 80 meters):

$$D_{\tau a} = (3.17 \cdot 10^{-8}) \cdot D/Q \cdot t^{-d} \cdot F_o \cdot \Sigma R_{ip\tau a} \cdot Q_{iv}$$

Note: It is assumed $R_{ip\tau a}$ will not contain long term X/Q or D/Q values.

6.8.3.2 On the Nuclide Concentration Screen (Screen 4.15), nuclide concentrations will be "scaled" if the SCAL_NUC parameter is set properly for a Release Point. This "scaling" is described as follows:

$$C_{inew} = (t / s) \cdot C_i$$

where

C_{inew} = concentration (after "scaling") of $nuclide_i$
s = sum of all nuclide concentrations on the Nuclide Concentration Screen.
t = total nuclide concentration entered by the user
C_i = concentration (before "scaling") of $nuclide_i$

6.9 Gaseous Permit Editing

6.9.1 User Interface and Functionality

Functionality for editing gaseous permits through the EMS software shall be described in section 4 of the EMS Operator's Manual (Reference 2.1.1), with the following revisions:

The appearance and functionality of the gaseous permit definition screen, the monitor response screen, and nuclide concentration shall be modified as described for the Pre- and Post-Release stages in sections 6.7.1 and 6.8.1 above.

6.9.2 Associated Reports

The permit report format and contents for edited open and closed gaseous permits shall be as specified above for original permit reports, in sections 6.7.2 and 6.8.2, respectively.

6.9.3 Underlying Calculations

The calculation methods for editing open and closed gaseous permits shall be specified for original calculations, in sections 6.7.3 and 6.8.3, respectively.

6.10 Gaseous Permit Deletion

Functionality for deleting gaseous permits through the EMS software shall be described section 4 or the EMS operator's Manual (Reference 2.1.1).

6.11 Semi-Annual Reporting

6.11.1 User Interface and Functionality

Semi-Annual Reporting functionality for the EMS software shall be as described in section 5 of the EMS Operator's Manual (Reference 2.1.1), with the following revisions:

6.11.1.1 On Report 5.01 (Gaseous Summation of All Releases):

- Compute each value on line A.3 of the report by taking

$$\text{the greater of} \left\{ \begin{array}{l} 100 \cdot D_{ag} / QL_{ag} \\ 100 \cdot D_{ab} / QL_{ab} \end{array} \right.$$

where

D_{ag} = the gamma air dose in the applicable quarter at the site boundary receptor due to noble gas emissions (mrem)

D_{ab} = the beta air dose in the applicable quarter at the site boundary due to noble gas emissions (mrem)

QL_{ag} = the quarterly limit on D_{ag} (mrem) [usually 5]

QL_{ab} = the quarterly limit on D_{ab} (mrem) [usually 10]

A note will be made at the bottom of the report stating whether the beta air dose and its associated limit or gamma air dose and its associated limit were used for the Percent of Applicable Limit of Fission and Activation Products..

- The values on lines B.3, C.3, and D.3 will be the equivalent. They will be calculated as follows:

$$\text{the greatest (over T) of} \left\{ 100 \cdot (\Sigma\ D_{i,T}) / QL_{rp} \right.$$

where

$D_{i,T}$ = the dose to organ T of the controlling receptor, in the applicable quarter, due to gaseous emissions of radionuclide i (mrem)

The summation is over all non-noble gas radionuclides with half-lives greater than 8 days, including radioiodines, particulates, and tritium.

QL_{rp} = the quarterly limit on the controlling receptor organ dose due to gaseous effluents (mrem) [usually 7.5]

6.11.1.2 On Report 5.02 (Liquid Summation of All Releases):

- For each quarter q in the report, calculate the reportable dilution volume (DV_{rq}, in liters) for the portion of the quarter that is within the report dates. It is the sum of the reportable monthly dilution volumes (DV_{rm}) in user units for all the months in the quarter that are within the report dates:

$$DV_{rq} = 28.31685 \cdot sd\_lvolf \cdot \Sigma\, DV_{rm}$$

The values DV_{rm} are from the column tvol of the QDVOL table. The value DV_{rq} is included in the report on line F, and is used in the calculations below. "sd_lvolf" should be the user unit conversion factor to convert from user units to ft^3. 28.31685 is a unit conversion factor from ft^3 to liters.

- For each space on a line titled "AVERAGE DILUTED CONCENTRATION DURING PERIOD", the average concentration (Cq, in μCi/ml) for the respective quarter is computed as follows (where i ranges over only the nuclides in the category):

$$C_q = \Sigma\, C_{iq} = \Sigma\, [Act_{iq} / (1000 \cdot DV_{rq})]$$

where

Act_{iq} = total activity of nuclide i released during the portion of the quarter q that is within the period (μCi)

DV_{rq} = reportable dilution flow for the portion of quarter q that is within the report period (liters), as calculated above.

- Compute each value on line A.3 and B.3 of the report by taking

the greater of $\begin{cases} 100 \cdot D_{lt} / QL_{lt} \\ 100 \cdot D_{lo} / QL_{lo} \end{cases}$

where

D_{lt} = the liquid total body dose in the applicable quarter at the site boundary receptor (mrem)

D_{lo} = the liquid maximum organ dose in the applicable quarter at the site boundary (mrem)

QL_{lt} = the quarterly limit on D_{lt} (mrem) [usually 1.5]

QL_{lo} = the quarterly limit on D_{lo} (mrem) [usually 5]

A note will be made at the bottom of the report stating whether the liquid total body dose and its associated limit or maximum organ dose and its associated limit were used for the Percent of Applicable Limit.

- Compute each value on line C.3 of the report as follows:

$$P_q = 100 \cdot C_q / L_{dg}$$

where

C_q = sum of noble gas concentrations

P_q = Percentage applicable to a given quarter for dissolved and entrained gases

L_{dg} = Liquid dissolved gas limit (μCi/ml) [usually 2.0E-04]

6.11.2 EMS Trend Plots

Trend Plotting functionality for the EMS software shall be described in section 5 of the EMS Operator's Manual (Reference 2.1.1) with no revisions.

6.12 End-of-the-Year Data Archiving

6.12.1 User Interface and Functionality

End-of-the-Year Data Archiving functionality for the EMS software shall be described in section 6 of the EMS Operator's Manual (Reference 2.1.1) with no revisions.

Documentation Review Report

Document Reviewed SRS SEABROOK STATION EMS RS-8448-04

Does the document meet the requirements? (Yes) or No

Is the document approved? (Yes) or No

If not please state the exceptions:

Signature: Peter van der Heide Date: 9/15-93

page 34

00-5792

Documentation Review Report

Document Reviewed JRJ (RT-8448-04) SITEBOOK CMS

Does the document meet the requirements? (Yes) or No

Is the document approved? (Yes) or No

If not please state the exceptions:

Signature: Lauren Gillette Date: 9/17/03

APPENDIX C: EMS SOFTWARE DOCUMENTATION

ATTACHMENT 4: TECHNICAL REFERENCE MANUAL, EFFLUENT MANAGEMENT SYSTEM NAESCO SEABROOK STATION, JULY 1994, FP 75486