TEST REPORT

M.T. (3-Hour) Electrical Raceway Fire Barrier Systems Performance Testing

Conduit, Junction Box & Electrical Cable Air Drop Raceways

Project No. 14790-123265

FINAL REPORT

May 14, 2005

OMEGA POINT
LABORATORIES, INC.
16015 Shady Falls Road
Elmendorf, TX 78112
(v) 210-635-8100
(f) 210-635-8101
800-966-5253
www.opl.com

Prepared for:
SANDIA NATIONAL LABORATORIES
P.O. Box 5800
Albuquerque, NM 87185-5800

Abstract

This document describes the evaluation of three standard conduit raceway sizes, one junction box, one electrical cable air drop and several support systems, all protected with the M.T. Three Hour System, when exposed to the ASTM E119 time-temperature heating curve. Each conduit size was tested empty and heavily loaded with bare #8 AWG copper wire. Results are given in the Conclusion Section of this report.

The details, procedures and observations reported herein are correct and true within the limits of sound engineering practice. All specimens and test sample assemblies were produced, installed and tested under the surveillance of either Sandia National Laboratories, the manufacturer's or the testing laboratory's in-house Quality Assurance Program. This report describes the analysis of a distinct assembly and includes descriptions of the test procedure followed, the assembly tested, and all results obtained.

Deggary N. Priest, President — May 14, 2005 Date

Reviewed and approved:

Constance A. Humphrey, QA Director — May 14, 2005 Date

Omega Point Laboratories, Inc.
16015 Shady Falls Road
Elmendorf, Texas 78112-9784
210-635-8100 / FAX: 210-635-8101 / 800-966-5253
www.opl.com / e-mail: dnpriest@ix.netcom.com

ACCREDITED No. 0689-01

TABLE OF CONTENTS

ITEM		PAGE
PURPOSE AND SCOPE		4
OBJECTIVE		5
TEST PROCEDURE		5
Horizontal Test Furnace		5
Furnace Pressure		7
Thermocouple Locations		8
Data Acquisition Systems		10
Correction Factor		10
Hose Stream Test		11
Assessment Criteria		11
TEST SPECIMEN CONSTRUCTION		11
Supporting Deck		11
CONDUCT OF TEST		13
TEST RESULTS		13
CONCLUSIONS		17
APPENDICES		
Appendix A:	TEST PLAN	20
Appendix B:	CONSTRUCTION DRAWINGS	68
Appendix C:	THERMOCOUPLE LOCATIONS	75
Appendix D:	TEST DATA	94
Appendix E:	M.T. INSTALLATION INSTRUCTIONS	341
Appendix F:	QA DOCUMENTATION FOR HEMYC INSTALLATION	466
Appendix G:	OPL QUALITY ASSURANCE DOCUMENTATION	517
Appendix H:	PHOTOGRAPHS	670
LAST PAGE OF REPORT		693

PURPOSE AND SCOPE

Note: This section has been reproduced in part from the Test Plan contained in Appendix A.

Section 50.48, "Fire Protection," of 10 CFR Part 50 requires that each operating nuclear power plant have a fire protection plan that satisfies General Design Criterion 3 of Appendix A to 10 CFR Part 50. Criterion 3 requires that structures, systems, and components important to safety shall be designed and located to minimize, consistent with other safety requirements, the probability and effect of fires and explosions. Noncombustible and heat resistant materials shall be used wherever practical throughout the unit, particularly in locations such as the containment and control room. Fire detection and fighting systems of appropriate capacity and capability shall be provided and designed to minimize the adverse effects of fires on structures, systems, and components important to safety. Firefighting systems shall be designed to assure that their rupture or inadvertent operation does not significantly impair the safety capability of these structures, systems, and components. Section 50.48 also requires that all plants with operating licenses issued prior to January 1, 1979, satisfy the requirements of Sections III.G, III.J, and III.O of Appendix R to 10 CFR Part 50. (Post 1979 plants (per 10 CFR Part 50.48) have to comply with the provisions of their licenses.)

Section III.G of Appendix R, which addresses fire protection of safe shutdown capability, requires that fire protection features be provided such that one train of systems necessary to achieve hot shutdown conditions remains free of fire damage. One acceptable means of satisfying this requirement is to separate cables and equipment and associated non-safety circuits of redundant systems necessary to achieve and maintain hot shutdown conditions located in the same fire area by a fire barrier having a 3-hour fire rating (Section III.G.2.a). Another means is to enclose cables and equipment and associated non-safety circuits of one redundant train in a fire barrier having a 1-hour fire rating and install fire detectors and an automatic fire suppression system in the fire area (Section III.G.2.c).

The scope of this [project] is to describe the overall plan for investigating the fire resistance rating of [the] M.T. (3-hour) … electrical raceway fire barrier system (ERFBS). The primary approach … [was] to perform [an] … ASTM E 119 furnace test on a number of cable raceway types that [were] protected by … the M.T. … fire barrier material. The M.T. test [was] performed for a period of 180-minutes, followed by a hose stream test and post-test visual inspection of the ERFBS. . . .

OBJECTIVE

Note: This section has been reproduced in part from the Test Plan contained in Appendix A.

The objective of this program [was] to assess the fire resistance rating of M.T. ERFBS by subjecting various test specimens (conduits, electrical cable air drop and junction box) to standard temperature-time conditions as specified in ASTM E 119 and criterion stipulated in GL 86-10, Supplement 1. The types and characteristics of the ERFBS enclosing the test specimens [were] intended to simulate as-installed configurations.

These tests [were intended to] provide additional data in that redundant conduits loaded to their maximum capacities with cables [were] included in the test. Also, [two] support structure analogs partially enclosed in the ERFBS [were] exposed to the three-hour test conditions.

TEST PROCEDURE

Note: Since the Test Plan (Appendix A) includes an accurate and complete description of the test procedure to be followed, much of these details have not been reproduced in the main body of this report.

Horizontal Test Furnace

The 12' x 18' x 7' deep horizontal test furnace used in these evaluations was designed to allow the specimen to be uniformly exposed to the specified time-temperature conditions. It is fitted with 12 symmetrically-located premixed air/propane gas burners designed to allow an even heat flux distribution across the exposed surface of a horizontal test specimen. Furnace pressures may be maintained at any value from +0.03" W.C. to -0.05" W.C. The furnace consists of a structural steel frame, lined with sheet metal and insulated with a six inch thick layer of ceramic fiber.

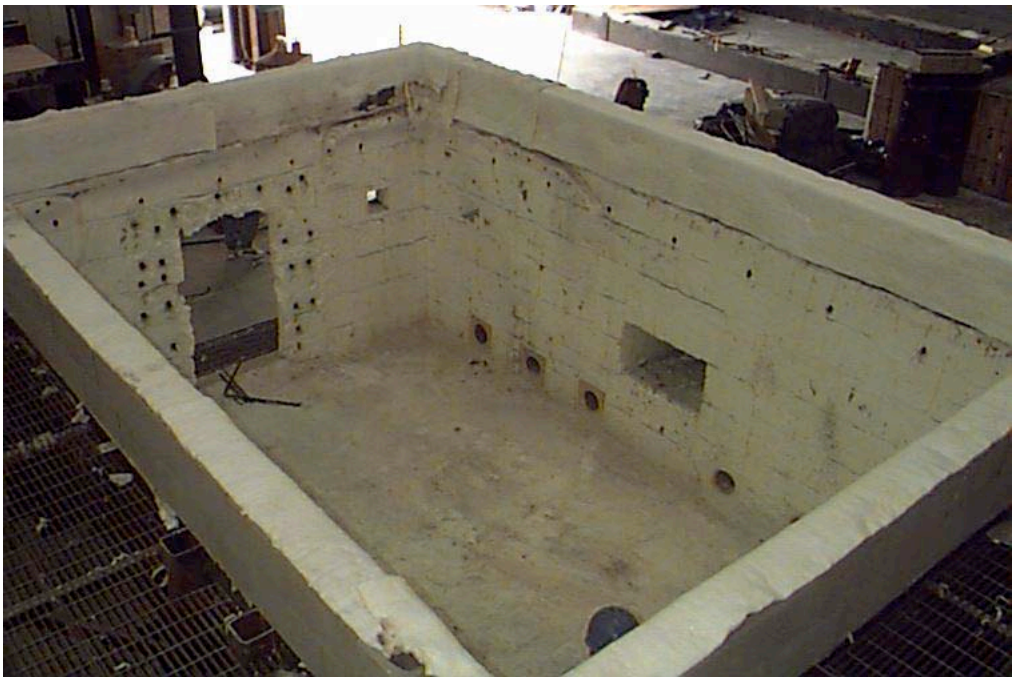

12' x 18' Horizontal Furnace (Overhead View)

The temperature within the furnace is determined to be the mathematical average of thermocouples located symmetrically within the furnace with half positioned twelve inches below the bottom surface of the test deck and the other half located 12" below the bottom of the test specimens. In this manner, an average exposure on the entire assembly can be determined by averaging the readings in real time and adjusting the average temperature to follow the standard time-temperature curve. The materials used in the construction of these thermocouples are those suggested in the E119 test standard. During the performance of a fire exposure test, the furnace temperatures are monitored at least every 15 seconds and displayed for the furnace operator to allow control along the specified time-temperature curve. All data is saved to hard disk at intervals of once per minute unless more often is requested.

The fire exposure is controlled to conform with the standard time-temperature curve shown in Figure 1, as determined by the tables below:

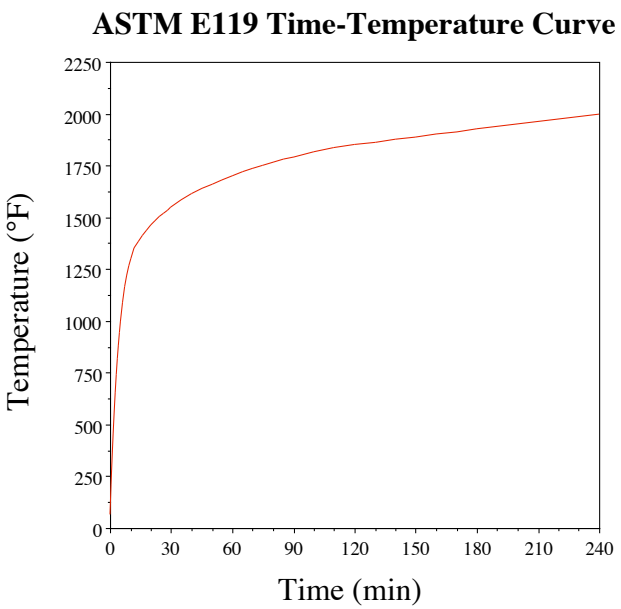

Time (min)	Temperature (°F)
0	68
5	1000
10	1300
20	1462
30	1550
60	1700
90	1792
120	1850
180	1925
240	2000

Figure 1 E119 Temperature Exposure

The furnace interior temperature during a test is controlled such that the area under the time-temperature curve is within 10% of the corresponding area under the standard time-temperature curve for 1 hour or less tests, 7.5% for those less than 2 hours and 5% for those tests of 2 hours or more duration.

Furnace Pressure

The pressure differential between the inside of the furnace (as measured approximately 12" below the exposed surface of the test support slab) and the laboratory ambient air was maintained at 0.00 inches of water column for the duration of the fire exposure test (after the first five minutes, during which furnace stabilization was achieved). This was achieved and controlled by adjusting the inside furnace pressure until slight puffs of intermittent flames extended through unused thermocouple probe holes in the sides of the furnace, indicating a very slight positive pressure at these locations.

Thermocouple Locations

All six conduit systems were instrumented with 24 GA. Type K Teflon® insulated thermocouples (Special Limits of Error: ±1.1°C) purchased with calibration certifications and lot traceability. The thermo-junctions were mechanically attached along the side of each conduit which faced the bottom or sides of the furnace (that is, along the outside and bottoms of the conduit) by clamping them under the heads of #8x32 stainless steel machine bolts placed into holes drilled and threaded to receive them, spaced 6" o.c. Bare #8 AWG, multiple-strand copper conductors were instrumented with similar thermocouples attached every 6 inches along the wire's length. These thermocouples were attached by placing the thermo-junction in direct contact with the surface of the wire and crimping the junction to the copper wire with a copper Buchanan 2011S open end splice cap fastened in place with a Buchanan C-24 "pres-SURE" tool. An instrumented bare #8 AWG conductor was then pulled through the inside of each conduit. In conduits which contained additional bare #8 AWG conductors as thermal mass, the instrumented conductors were placed inside the bundle, to avoid abrasive damage to the thermocouples during installation of the bundle into the conduit. The support systems contained thermocouples installed as indicated in the Test Plan (Appendix A).

Due to the fact that the M.T. system releases moisture upon activation, and that water vapor can condense upon contact with metal cooler than 212°F, it was necessary to utilize thermocouples which can withstand being wetted without affecting their readings. Due to the excessive cost of metallic-clad thermocouples (such as those utilized on the junction box below, but chosen for use there because they also had to traverse a very hot section of the junction box supports), the decision was made to use Teflon® clad thermocouple wire (Teflon® PFA [perfluoroalkoxy] insulation extruded on the single conductors which are then laid parallel and jacketed with Teflon® PFA, manufactured by PMC Corporation). This wire, while completely unaffected by moisture, does have an upper temperature limitation of around 700°F (depending upon the time spent at elevated temperatures). Above that, the Teflon® cladding can melt and allow the chromel and alumel thermocouple wires to touch and short out; thus giving intermittent and unreliable results. However, since this temperature is hundreds of degrees above the failure temperatures for the raceway systems, this was not considered to be a significant factor. This factor should be borne in mind however, when irregular ("jumpy") thermocouple readings are encountered in the data (see example below).

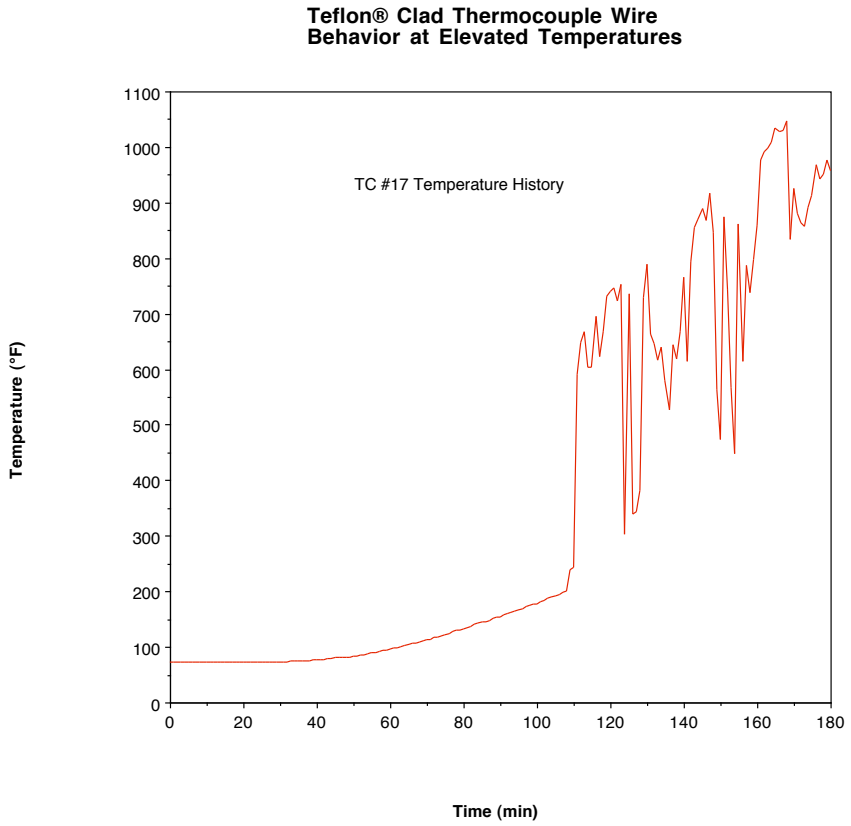

As a typical example, the graph above shows the behavior of TC #17 (located in Item 3A, empty 4" conduit). The temperatures are well-behaved until a temperature of around 650°F was reached. At that point the insulation melted and the leads shorted together, yielding unreliable information. It must be considered that the observed temperatures in this situation may or may not be indicative of the temperatures at the location of the intended thermojunction.

The junction box was instrumented with $^{1}/_{16}$" diameter Inconel® sheathed, 30 Ga. Type K thermocouples, to allow them to withstand the temperatures which may be experienced by their leads passing between the junction box and outside the heated area. These thermocouples were not purchased with calibration certificates, but instead were numbered and sent to Sandia National Laboratories, which performed a series of multi-temperature point calibrations of them. The results of these calibrations are presented in Appendix D, Quality Assurance.

See Appendix C Thermocouple Locations for exact locations of all test item thermocouples.

Data Acquisition Systems

The outputs of the thermocouples were monitored by 300 channel and 100 channel Yokogawa, Inc., Model Darwin Data Acquisition Units, driven by Macintosh computers. The furnace control thermocouples were monitored by a separate 100 channel Yokogawa, Inc. Model Darwin Data Acquisition Unit and Macintosh computer. The computers were programmed in LabVIEW 5.0 to send the commands to the data acquisition systems to sample the data input lines and to convert the raw data into a usable format (i.e., degrees Fahrenheit) for display on screen and storage as an ASCII tab-delimited text file. Those files were then, after the test, imported into MS Excel for tabular and graphical display.

Correction Factor

In accordance with ASTM E119, when the indicated resistance period is $^1/_2$ h or over, determined by the average or maximum temperature rise on the unexposed surface or within the test sample, or by failure under load, a correction shall be applied for variation of the furnace exposure from that prescribed, where it will affect the classification, by multiplying the indicated period by two thirds of the difference in area between the curve of average furnace temperature and the standard curve for the first three fourths of the period and dividing the product by the area between the standard curve and a base line of 68°F (20°C) for the same part of the indicated period, the latter area increased by 3240°F•min to compensate for the thermal lag of the furnace thermocouples during the first part of the test. For a fire exposure in the test higher than standard, the indicated resistance period shall be increased by the amount of the correction. For a fire exposure in the test lower than standard, the indicated resistance period shall be similarly decreased for fire exposure below standard. The correction is accomplished by mathematically adding the correction factor, C, to the indicated resistance period.

The correction can be expressed by the following equation:

$$C = \frac{2I(A - A_s)}{3(A_s + L)}$$

where:

C = correction in the same units as I,
I = indicated fire-resistance period,
A = area under the curve of indicated average furnace temperature for the first three

fourths of the indicated period,

A_s = area under the standard furnace curve for the same part of the indicated period, and

L = lag correction in the same units as A and A_s (54°F•h or 30°C•h (3240°F•min or 1800°C•min))

Hose Stream Test

Immediately following the fire endurance test, a hose stream test was performed in accordance with USNRC Generic Letter 86-10, Supplement 1, Enclosure 1, Section VI. The hose stream was "applied at random to all exposed surfaces of the test specimen through a 1-1/2" fog nozzle set at a discharge angle of 15 degrees with a nozzle pressure of not less than 75 psi and a minimum discharge rate of 75 gpm with the tip of the nozzle at a maximum of 10 feet from the test specimen. Duration of the hose stream application is 5 minutes." Prior to the hose stream application, the laboratory ensured the correct angle spray pattern, pressure and flow was achieved through calibrated gauges and other equipment as required.

Assessment Criteria

The test specimens were subjected to the ASTM E 119 temperature-time profile in the test furnace. An assessment of the ERFBS performance was based on two principal factors, as stated in Generic Letter 86-10, Supplement 1:

1. *The time at which the average unexposed side temperature of the fire barrier system, as measured on the exterior surface of the raceway or component, exceeds 139°C (250°F) above its initial temperature. Or the time at which a single temperature reading of a test specimen exceeds 30% of the maximum allowable temperature rise (i.e., 180°C [325°F]) above its initial temperature.*
2. *The fire barrier system remains intact during the fire exposure and water hose stream test without developing any openings through which the cable raceway is visible.*

TEST SPECIMEN CONSTRUCTION

Supporting Deck

A 13' x 19' insulated 10 GA. steel deck was designed to accept the test items in this project. The deck was continuously welded and reinforced with 4" structural steel channel, as indicated in the drawings in Appendix B. The placement of all test items in the deck was adjusted to maximize

distances between items and between items and furnace walls, and to minimize shadowing effects between items.

Each of the conduits were designed to pass through the test deck, extend 36" below the insulated lower surface of the deck, turn 90° (through a zero radius turn) to horizontal, extend a total of 60", and then turn 90° upwards (through a sweeping radius turn) and pass back up and through the supporting deck. All test items were supported by structural elements on the unexposed side of the test deck at distances of 12" and 30" above the deck. The underside of the deck was insulated with 5" of ceramic fiber blanket, held in place with impaling pins spaced nominally 18" o.c. or as needed.

One specimen of each conduit contained a heavy loading (nominally 30%) of bare #8 multi-strand copper conductor. The length and weight of each bundle was determined, as well as the weight of each assembled conduit system and its weight per unit length. The junction box weight is reported as a single item.

Raceway	Raceway Weight Per Unit Length* (lb/ft)	No. of Strands of Bare #8 Conductor	Bare #8 Weight per Unit Length (lb/ft)	% Fill by Actual Area	Total Weight per Unit Length (lb/ft)
3A (4" conduit)	9.4	1	n/a	n/a	9.4
3B (4" conduit)	9.4	291	14.84	30.0	24.24
3C ($2^1/2$" conduit)	5.1	1	n/a	n/a	5.1
3D ($2^1/2$" conduit)	5.1	113	5.85	29.8	10.95
3E (1" conduit)	1.5	1	n/a	n/a	1.5
3F (1" conduit)	1.5	18	1.02	29.7	2.52
3G (Unistrut)	1.67	n/a	n/a	n/a	1.67
3H (2"x2" steel)	2.76	n/a	n/a	n/a	2.76
3I (junction box)	26.18 lb	n/a	n/a	n/a	n/a
3J (cable air drop)	-	7	0.36	n/a	0.36

* Note: this is the weight of the raceway only, before the bare #8 was installed.

CONDUCT OF TEST

Preburn Inspections

As required in the Test Plan, prior to the commencement of the fire endurance test, a thorough check of the test assembly and associated equipment (including calibration of the data recording equipment) and completion of applicable Laboratory QA/QC checklists were performed and documented by the testing laboratory.

Written approval of the construction, assembly, installation and instrumentation was supplied by OPL and signed by Sandia National Laboratories' representative prior to performance of the fire exposure test (a sign-off sheet for this purpose was supplied by the Laboratory).

The test assembly was then placed on the large scale horizontal fire resistance furnace and the thermocouples connected to the data acquisition system and their outputs verified. The test assembly was inspected one last time before the furnace was closed prior to the test. Upon receipt of approval to proceed, the test was initiated. Following the fire exposure test, all data acquisition systems were recalibrated in accordance with the Test Plan.

TEST RESULTS

The thermocouples were connected to the data acquisition systems and their outputs verified on April 21, 2005. The furnace was fired on April 25, 2005, and computer data collection of thermocouple data continued for 180 minutes. The ambient temperature at the start of the test was 67°F, with 76% relative humidity. The furnace was fired at 9:02 AM and the standard time-temperature curve followed for 180 minutes. The pressure differential between the inside of the furnace (as measured 12" below the exposed surface of the test slab) and the laboratory ambient air was maintained at 0.00 inches of water column for the duration of the fire exposure test (after the first five minutes, during which furnace stabilization was achieved).

Persons present to perform or witness the test were as follows:

Deggary Priest	-	Omega Point Laboratories, Inc.
Connie Humphrey	-	Omega Point Laboratories, Inc.
Mike Dey	-	Omega Point Laboratories, Inc.
Cleda Patton	-	Omega Point Laboratories, Inc.
Troy Bronstad	-	Omega Point Laboratories, Inc.
Oscar Estrada	-	Omega Point Laboratories, Inc.
Richard Beasley	-	Omega Point Laboratories, Inc.
Laudencio Castanon	-	Omega Point Laboratories, Inc.
Frank Wyant	-	Sandia National Laboratories
Bruce Levin	-	Sandia National laboratories
Chuck Girard	-	URS Corporation
Mark Salley	-	US Nuclear Regulatory Commission
Kendra Hill	-	US Nuclear Regulatory Commission
Jason Dreisbach	-	US Nuclear Regulatory Commission
Mike Jordan	-	Promatec
Frank Haese	-	Promatec
Jose Espanosa	-	Promatec

Observations made during the test were as follows:

TIME (min:s)	OBSERVATIONS
0:00	Furnace ignited at 9:02 AM.
3:00	Tape on the exterior of various conduits has ignited and is burning steadily.
5:00	Furnace pressure adjusted to neutral 12" below test deck.
9:00	Exterior surfaces of the protected items turning white. Tape on junction box supports is burning.
14:00	Joints on conduit outer wrap systems are beginning to open slightly.
17:00	Residual flaming continues on junction box supports and conduit 3D. Others, also, but visibility is limited.
33:00	Residual flaming continues on most visible conduits, mostly at zero-radius turns.
60:00	All surfaces red hot. Most joints are continuing to open.
120:00	Same.

TIME (min:s)	OBSERVATIONS (continued)
157:00	Aluminum oxide observed pouring out of several of the raceways.
180:00	Furnace extinguished. Specimen thermocouples were disconnected and the test assembly lifted from the furnace, observed, photographed and moved to the hose stream test area. Open joints were observed on virtually all raceways.
185:56	Hose stream began at a nozzle spray angle of 15°, pressure at 75 psi and from a distance of 10 ft. The entire test assembly was slowly spun and the hose stream operator remained stationary and applied the hose to the test items as they passed in front of him.
190:56	Hose stream stopped. The test assembly was then observed, photographed and allowed to drip for several hours before being placed on 8' tall 24" ø pipe stands and undergoing post-test disassembly. There were no significant changes in any of the exterior claddings on the raceways due to the hose stream test. The outer insulation wraps all showed significant openings through to the stainless steel foil, due to shrinkage. No raceways could be seen through the M.T. system.

Post-test examination of the test items revealed that virtually all exterior insulation pads had shrunk enough to result in 2-3" wide openings between pads. Visible between the gaps was the stainless steel foil wraps which were positioned beneath the aluminum trihydrate-containing sacks. No significant shrinkage was noticed beneath the stainless steel foil. All of the systems which were disassembled for observation had no insulation left on the thermocouple wires within, indicating that the maximum temperatures for these thermocouples had definitely been exceeded. All internal raceways showed heat scorching and other damage.

Other than small pieces of the deck insulation falling to the laboratory floor, the test assembly showed no visible effect due to the hose stream test. No openings through to the raceway item were noticed on any of the test items. None failed the hose stream test. Much steam and dripping hot water remained after the hose stream was stopped.

In accordance with the E119 test standard, a calculation for any correction to the indicated fire resistance period was done. The correction factor was then mathematically added to the indicated fire resistance period, yielding the fire resistance period achieved by this specimen:

ITEM	DESCRIPTION	TEST VALUE
C	correction factor	-0.04 min (-3 seconds)
I	indicated fire-resistance period	180 min
A	area under the curve of indicated average furnace temperature for the first three fourths of the indicated period	212 335°F•min
As	area under the standard furnace curve for the same part of the indicated period	212 410°F•min
L	lag correction	3240°F•min
	FIRE RESISTANCE EXPOSURE RECEIVED BY THIS SPECIMEN ==>	180

Note: The standard specifies that the fire resistance be determined to the nearest integral minute. Consequently, if the correction factor is less than 30 seconds, and the test specimen met the criteria for the full indicated fire resistance period, no correction is deemed necessary. That was the case for this project.

CONCLUSIONS

In accordance with the assessment criteria listed in the Test Plan, all raceway systems failed to meet a 3h fire endurance period. The table below summarizes the results for each item. Note that the instrumented bare #8 copper wires with the thermocouples attached were buried within the bare copper wire bundles to protect the thermocouples from damage while the bundles were being pulled through conduit raceways.

Raceway		Time to $\Delta T_{avg} \geq 250°F$ (min)	Time to $\Delta T_{ind} > 325°F$ (min)	Max. Temp Bare #8@1h (°F)	Burn-Through/ Structural Failure Yes/No	Pass Hose Stream Yes/No	Final Fire Endurance (min)
3A	4" Conduit (empty)	121	110	961	No	Yes	110
3B	4" Conduit (loaded: fill=30.0%, 14.84 lb/ft)	143	113	374	No	Yes	113
3C	2 1/2" Conduit (empty)	119	103	1119	No	Yes	103
3D	2 1/2" Conduit (loaded: fill=29.8%, 5.85 lb/ft)	126	112	577	No	Yes	112
3E	1" Conduit (empty)	98	87	1314	No	Yes	87
3F	1" Conduit (loaded: fill=29.7%, 1.02 lb/ft)	108	96	1084	No	Yes	96
3I	Junction Box (empty)	122	134	n/a	No	Yes	122
3J	Cable Air Drop (seven pcs of bare #8)	169	159	607	No	Yes	159

Item #3G: Unistrut Support & Item #3H: 2" x 2" Steel Support

The temperatures at a location 18" from the edge of the cladding on the exposed end of each of the two supports were determined, and are shown in the graph below. Item 3G, TC#360 and Item 3H, TC #342 were located at that distance. As the graph indicates, the temperature 18" from the edge of the cladding on Item 3G (Unistrut®) achieved a fire endurance rating of 58 minutes, while the fire endurance rating at the same position on Item 3H (2" x 2" steel support) was reached at 56 minutes. These comparative results are as expected, since the 2" x 2" steel material has a higher cross-section of metal, and hence will conduct more heat.

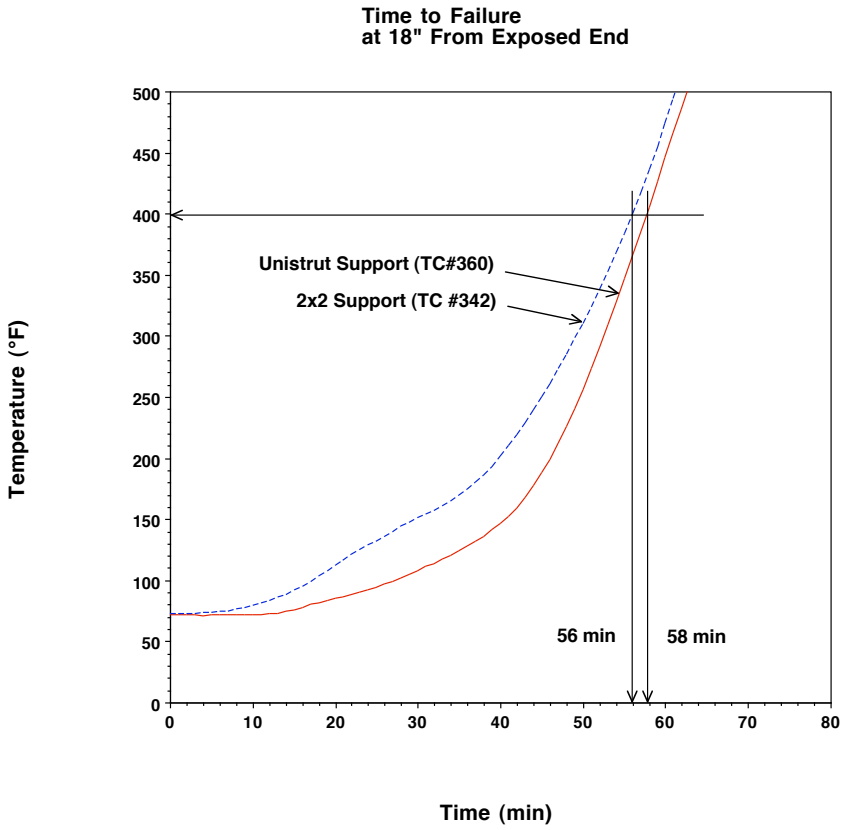

Shrinkage of the outer M.T. insulation pads

During the fire exposure, shrinkage of the Hemyc insulation pads appeared to be caused by the heating of the surface fabric. The end result, was that as adjacent insulation pads withdrew from each other during the shrinkage process, gaps of 3 – 4" appeared, which allowed the furnace heat to attack the stainless steel foil layer within each system. As previously mentioned, the hose stream test did not appear to cause any change in the opening sizes, but the hose stream test can be judged as successful, since the openings did not extend past the layer of stainless steel foil.

Loaded Conduits versus Empty Conduits

Due to the significant effects of the shrinkage of the outer insulation pads of the M.T. system (and the subsequent opening of joints down to the stainless steel layer), the effects of the heavy loadings were overshadowed. No useable information could be extracted from these systems concerning the effect of loading.

Appendix A

TEST PLAN

Plan for Hemyc (1-Hour) and M.T. (3-Hour) Electrical Raceway Fire Barrier Systems Performance Testing

Revision M
April 8, 2005

1 PURPOSE AND SCOPE

Section 50.48, "Fire Protection," of 10 CFR Part 50 requires that each operating nuclear power plant have a fire protection plan that satisfies General Design Criterion 3 of Appendix A to 10 CFR Part 50. Criterion 3 requires that structures, systems, and components important to safety shall be designed and located to minimize, consistent with other safety requirements, the probability and effect of fires and explosions. Noncombustible and heat resistant materials shall be used wherever practical throughout the unit, particularly in locations such as the containment and control room. Fire detection and fighting systems of appropriate capacity and capability shall be provided and designed to minimize the adverse effects of fires on structures, systems, and components important to safety. Firefighting systems shall be designed to assure that their rupture or inadvertent operation does not significantly impair the safety capability of these structures, systems, and components. Section 50.48 also requires that all plants with operating licenses issued prior to January 1, 1979, satisfy the requirements of Sections III.G, III.J, and III.O of Appendix R to 10 CFR Part 50. (Post 1979 plants (per 10 CFR Part 50.48) have to comply with the provisions of their licenses.)

Section III.G of Appendix R, which addresses fire protection of safe shutdown capability, requires that fire protection features be provided such that one train of systems necessary to achieve hot shutdown conditions remains free of fire damage. One acceptable means of satisfying this requirement is to separate cables and equipment and associated non-safety circuits of redundant systems necessary to achieve and maintain hot shutdown conditions located in the same fire area by a fire barrier having a 3-hour fire rating (Section III.G.2.a). Another means is to enclose cables and equipment and associated

non-safety circuits of one redundant train in a fire barrier having a 1-hour fire rating and install fire detectors and an automatic fire suppression system in the fire area (Section III.G.2.c).

The scope of this document is to describe the overall plan for investigating the fire resistance rating of Hemyc (1-hour) and M.T. (3-hour) electrical raceway fire barrier systems (ERFBS). The primary approach will be to perform a series of ASTM E 119 furnace tests on a number of cable raceway types that are protected by either the Hemyc (with and without air gaps) or M.T. fire barrier material. The Hemyc tests will be performed for a period of 60-minutes each, followed by a hose stream test and post-test visual inspection of the ERFBS. The M.T. test will be performed in a similar manner with the principal difference being that it will be conducted for a period of 3-hours. Descriptions of these tests and of the overall approach are provided below.

2 OBJECTIVE

The objective of this program is to assess the fire resistance rating of Hemyc and M.T. ERFBS by subjecting various test specimens (conduit, cable trays, cable drops, and junction boxes) to standard temperature-time conditions as specified in ASTM E 119 and criterion stipulated in GL 86-10, Supplement 1. The types and characteristics of the ERFBS enclosing the test specimens are intended to simulate as-installed configurations.

These tests will also provide additional data in that redundant conduits loaded to their maximum capacities with cables will be included in two of the test runs. Also, a few support structure analogs partially enclosed in the ERFBS will be exposed to the one- and three-hour test conditions.

3 APPROACH

The following sections describe the test specimens and the test conditions to be employed for the performance assessments of the Hemyc and M.T. electrical raceway fire barrier systems.

3.1 Test Specimens

The principal test specimens will include a variety of cable raceway types protected by either the Hemyc 1-hour rated ERFBS or M.T. 3-hour rated ERFBS. In one test, the test specimens will be protected with Hemyc fire barrier material directly attached to the raceway (i.e., without air gaps). The test specimens in the second test will include a mix of test specimen enclosure methods: some protected by Hemyc ERFBS framed with structural supports to provide a 5-cm (2 in) air gap between the ERFBS and the raceway and others protected with Hemyc by direct attachment. For the third test, the test specimens (of the same types included in the first test) will be protected with the M.T. ERFBS (directly attached to the raceways) and subjected to a 3-hour ASTM E 119 furnace exposure.

The types of test specimens and the configurations of the ERFBS selected for these tests are based principally on the application usage information provided to the NRC/NRR by industry (Letter: Emerson, NEI, to Frumkin, NRC/NRR, "Promatec Hemyc 1-Hour and M.T. 3-Hour Fire Barrier Systems," December 28, 2001 and via letter: Marion, NEI, to Hannon, NRC/NRR, "Comments on NRC Hemyc Test Plan," December 6, 2002). Additional correspondence addressing specific details about industry practices in Hemyc applications were also taken into account and, where practical, incorporated into the test plan (e.g., Email: Emerson, NEI, to Salley, NRC/RES, "Hemyc – Predominant Industry Practices," January 18, 2005 [a copy of this message is provided in Appendix B]).

The test protocols presented here are intended to provide bounding states of the protective material performance under standard test conditions. Also, this method is per NRC guidance, as stated in Generic Letter 86-10, Supplement 1, and represents current staff positions on bounding test approaches. Additionally, it is also required that the assembly and installation of the Hemyc and M.T. ERFBS shall be done in accordance with the vendor's specifications and meet all required vendor quality standards.

The test specimens will include the following items:

- 27-mm (1 in) Steel rigid metal conduit (RMC) arranged in a modified "U" configuration such that one vertical leg and one end of the horizontal span of the conduit intersect at a condolet LB access fitting, forming a right angle, while the other end of the horizontal span transitions to the second vertical leg via a conduit radius bend or elbow. Tests will be conducted on both "empty" and "loaded"[1] conduit configurations.
- 63-mm (2½ in) Steel rigid metal conduit (RMC) arranged in a modified "U" configuration such that one vertical leg and one end of the horizontal span of the conduit intersect at a condolet LB access fitting, forming a right angle, while the other end of the horizontal span will transition to the second vertical leg by means of a conduit radius bend or elbow. Both "empty" and "loaded" conduit configurations will be tested.
- 103-mm (4 in) Steel rigid metal conduit (RMC) arranged in a modified "U" configuration such that one vertical leg and one end of the horizontal span of the conduit intersect at a condolet LB access fitting, forming a right angle, while the other end of the horizontal span will transition to the second vertical leg through a conduit radius bend or elbow. Again, "empty" and "loaded" conduit configurations will be tested.
- A 305-mm (12 in) wide 16-gage galvanized steel ladder-back cable tray with 10 cm (4 in) high side rails and 23 cm (9 in) rung spacing. The cable tray will be constructed in a modified "U" configuration such that one vertical leg and one end of the horizontal span of the conduit intersect at a right angle, while the other end of the horizontal span will transition to the second vertical leg by means of a tray vertical curve. Only empty cable trays will undergo testing.
- A 914-mm (36 in) wide 16-gage galvanized steel ladder-back cable tray with 10 cm (4 in) high side rails and 23 cm (9 in) rung spacing. The cable tray will be constructed in a modified "U" configuration such that one vertical leg and one end of the horizontal span of the conduit intersect at a right angle, while the other end of the horizontal span will transition to the second vertical leg by means of a tray vertical curve. The cable trays will be tested without cables.
- Short cable drops consisting of a small bundle of No. 8 AWG bare copper wire suspended from the top of the furnace in a "U" loop configuration to simulate air drops.
- 46 cm x 61 cm x 20 cm (18" x 24" x 8") Steel junction boxes. The junction boxes will be suspended using supports protected by the ERFBS through direct attachment.
- Four separate support structure test elements consisting of two different cross sections (Unistrut® and square steel tube) formed into a right angle ("L")

[1] "Loaded" refers to approximately 30% of cross sectional area fill using bare #8 copper wires.

configuration and partially covered by the ERFBS. These structures are being included in the test program to evaluate the magnitude of heat transmission along their wrapped length and the possible thermal coupling effect on any supported assemblies or intervening items.

A bare #8 stranded copper wire, instrumented with thermocouples along its length, will be routed through each of the conduit test specimens and placed along the horizontal center of the cable tray test specimens and attached to the bottom of the rungs. The thermocouples will be mechanically attached to the bare copper conductor at 150-mm (6 in) spacing intervals. Additional thermocouples will be mechanically attached to the outer surfaces of the conduit test specimens and along the length of both side rails of the cable tray test specimens at 150-mm (6 in) intervals. The ends of the test specimens will be insulated with fiber filler inside and around their perimeters at the furnace-ceiling interface in accordance with the vendor's requirements.

The Hemyc ERFBS consists of blankets constructed of 38-mm (1.5 in) or 50-mm (2 in) thick, 128 kg/m^3 (8 lb/cu ft), JM Cerablanket/B&W Kaowool blanket covered with Refrasil fabric mesh on all surfaces exposed to the fire[2]. The materials are sewn together with "Astroquartz" thread. The cable tray and cable drop test specimens framed to support a 50-mm (2 in) air gap will use the 38-mm thick Hemyc covers and all direct attachment configurations will use the 50-mm thick wraps. All installation shall be in accordance with the vendor's requirements.

The M.T. three-hour ERFBS is virtually identical in concept and uses the same basic materials in construction as Hemyc, but the M.T. also has an internal layer of a heat-activated compound.

PCI Promatec, Inc. has been contracted to fabricate and install the Hemyc and M.T. materials on all of the test specimens.

[2] Previous versions of this test plan called for the use of Siltemp 84CH and 84SR fabric, however the manufacturer of Siltemp is no longer in business and Siltemp is no longer manufactured. Refrasil is an approved material for the fabrication of Promatec protective wrap components and will thus be used as the outer fabric for the Hemyc barriers for these tests.

Table 1 presents the test conditions to be investigated in terms of ERFBS type and configuration for each of the test specimens during the three tests. Conduits will not be tested in the air gap framed configuration and no cable trays will be tested with M.T.

Detailed construction drawings of each of the test specimens are provided in the appendix to this plan. The drawings define the specific details of the design and assembly of each test specimen. Promatec will provide separate drawings detailing the installation of the designated ERFBS. Drawings and descriptions of the dimensions and setup configurations in the furnace and instrumentation details are provided. The fabrication and installation of the ERFBS will be performed in accordance with vendor procedures. Provisions will be made to verify that all material/installation quality requirements are met.

Table 1: Test Matrix

	Test #1	**Test #2**	**Test #3**
	Hemyc (1-Hour, Direct Attachment)	Hemyc (1-Hour, Framed for Air Gap and Direct Attachment)	M.T. (3-Hour, Direct Attachment)
27-mm (1-in) Conduit[1]	X	(Not included)	X
63-mm (2½-in) Conduit[1]	X	(Not included)	X
103-mm (4-in) Conduit[1]	X	(Not included)	X
305-mm (12-in) Tray	(Not included)	X	(Not included)
914-mm (36-in) Tray	(Not included)	X	(Not included)
Junction Box[2]	X	X	X
Cable Drop	(Not included)	X	X
Unistrut Support	X	(Not included)	X
Tube Steel Support	X	(Not included)	X

[1] Conduit test specimens will be tested under both “empty” and “loaded-with-cable” conditions.
[2] Only a single junction box will be included in Test #2 that will be enclosed in Hemyc by Direct Attachment secured with metal bands.

Sandia National Laboratories will procure the required materials for the test specimens. The type of material and equipment obtained will include raceways (conduit, trays,

condolets, and junction boxes), metal to fabricate the support structure specimens, and miscellaneous hardware (nuts, bolts, screws, etc.) plus spare parts. Promatec will be responsible for QA of the Hemyc and M.T. materials and ERFBS installation.

The test laboratory will construct the test specimens in accordance with the detailed construction drawings. The process will include the positive mechanical fastening of the thermocouples to the outer surfaces of the test specimens and checkout for proper operation prior to the installation of the ERFBS. The test laboratory will also be responsible for installation of the instrumented bare #8 copper wire and the additional conductors within the raceways. Table 2 indicates the number of bare #8 conductors to be installed in the "loaded" conduit test specimens. The individual weights of the assembled, but empty, test specimens will be recorded prior to attachment to the test deck. Similarly, the weights of the bare #8 copper wire bundles will also be recorded prior to installation in the selected conduits. The resulting mass per unit length will be used as a first-order basis for determining the influence of cable loading on thermal response of the raceways. The test laboratory will be responsible for QA of the furnace temperatures and test operations. The laboratory will provide logs and record instrument data during the tests.

Table 2: Number of No. 8 Bare Conductors Routed in Loaded Conduit.

Loaded Test Specimens	No. bare #8 stranded wires	Approximate mass per unit length of wire
103-mm (4") Conduit	291	21.72 kg/m (14.58 lb/ft)
63-mm (2½") Conduit	113	8.45 kg/m (5.68 lb/ft)
27-mm (1") Conduit	18	1.38 kg/m (0.95 lb/ft)
Cable Drops	7	0.70 kg/m (0.50 lb/ft)

Photographs and documented written logs of the test specimens, both during and after assembly, shall be prepared by the testing laboratory prior to testing and included as part of the test QA documentation for the final test report.

PCI Promatec, Inc., through a contract with Sandia National Laboratories, will be responsible for fabricating and installing the ERFBS materials on the test specimens following construction, instrumentation and mounting on the test deck.

3.2 Assessment Criteria

The test specimens will be subjected to the ASTM E 119 temperature-time profile in the test furnace. An assessment of the ERFBS performance will be based on two principal factors, as stated in Generic Letter 86-10, Supplement 1:

1. *The time at which the average unexposed side temperature of the fire barrier system, as measured on the exterior surface of the raceway or component, exceeds 139 C (250 F) above its initial temperature. Or the time at which a single temperature reading of a test specimen exceeds 30% of the maximum allowable temperature rise (i.e., 181 C [325 F]) above its initial temperature.*
2. *The fire barrier system remains intact during the fire exposure and water hose stream test without developing any openings through which the cable raceway is visible.*

3.3 Test Facilities

The furnace tests will be conducted at Omega Point Laboratories (OPL), located in Elmendorf, Texas. OPL has a full-scale horizontal furnace that fully satisfies the requirements of this test plan. It is 3.7 m (12 ft) wide by 5.5 m (18 ft) long and 2.1 m (7 ft) deep equipped with twelve propane burners. The furnace has been demonstrated to produce the ASTM E 119 standard time-temperature profile.

The test furnace is located in a 18 m (60 ft) by 61 m (200 ft) by 9 m (30 ft) high building. This building has ample room for test specimen assembly and fire barrier installation activities prior to placement inside the furnace.

3.4 Primary Tests

Three separate test runs will be conducted as part of the primary test series. Two of the tests will test the performance of 1-hour rated Hemyc ERFBS and the third test will assess the performance of 3-hour rated M.T. ERFBS. All of the primary tests will be conducted using the ASTM E 119 standard time-temperature curve (Figure 1). The furnace calibration shall be within ASTM E 119 requirements and the calibration documentation included in the final test report. All thermocouples used in the testing (furnace and test specimens) shall be within ASTM E 119 requirements and the calibration documentation included in the final report.

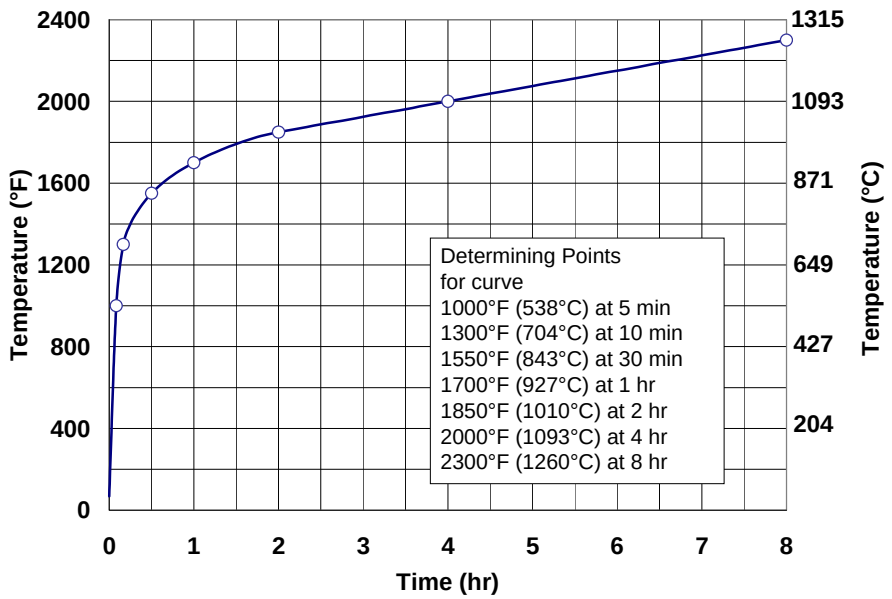

Figure 1. The Standard Time-Temperature Curve (based on data provided in ASTM E 119 – 00a.

As indicated above, these tests will be governed by the conditions provided in this test plan. The test specimens will consist of those items described in Section 3.1. The specific setup and configuration for each test is discussed below.

The Hemyc material will use Refrasil fabric on both the internal and external covering. Stainless steel bands will be used for attachment (i.e., no finger straps will be used). The spacing of the bands will be per Promatec's maximum spacing requirements. Standard 96 – 128 kg/m^3 (6 – 8 lb/ft^3) density ceramic fiber material will be used to construct the Hemyc wraps. The 27-mm (1-in) empty conduit, 63-mm (2½-in) loaded conduit and the 103-mm (4-in) conduit (empty and loaded) will all employ butt joints with 150-mm (6 in) wide collar over wraps. The 27-mm (1-in) loaded conduit and the 63-mm (2½-in) empty conduit will employ 50-mm (2-in) overlap joints. All cable trays will use the overlap joint method. In addition, the cable drop with the 50-mm (2-in) air gap will use the overlap method for sealing the material joints while the cable drop without the air gap will use collars to cover the butt joints.

3.4.1 Test #1

The first test of the series will be conducted on nine test specimens with Hemyc ERFBS directly attached to the raceways (i.e., without framework to provide air gaps between the fire barrier material and raceways). The nominal thickness of the Hemyc will be 50 mm (2 in).

Figure 2 shows one possible configuration of the test specimens inside the furnace. As indicated in the figure, the test specimens include:

- A 103-mm (4 in) conduit without additional cables,
- A 103-mm (4 in) conduit loaded with the maximum (30% of conduit's cross-sectional area) fill of cables,
- A 27-mm (1 in) conduit and condolet LB assembly without cables,
- A 27-mm (1 in) conduit and condolet LB assembly with additional cables (30% fill),
- A 63-mm (2½ in) conduit and condolet LB assembly with no cables,
- A 63-mm (2½ in) conduit and condolet LB assembly with cables (30% fill),
- A 46 cm X 61 cm X 20 cm (18" x 24" x 8") junction box,
- A partially protected Unistrut® support assembly, and
- A partially protected 5 cm x 5 cm (2" x 2") square steel tube support assembly

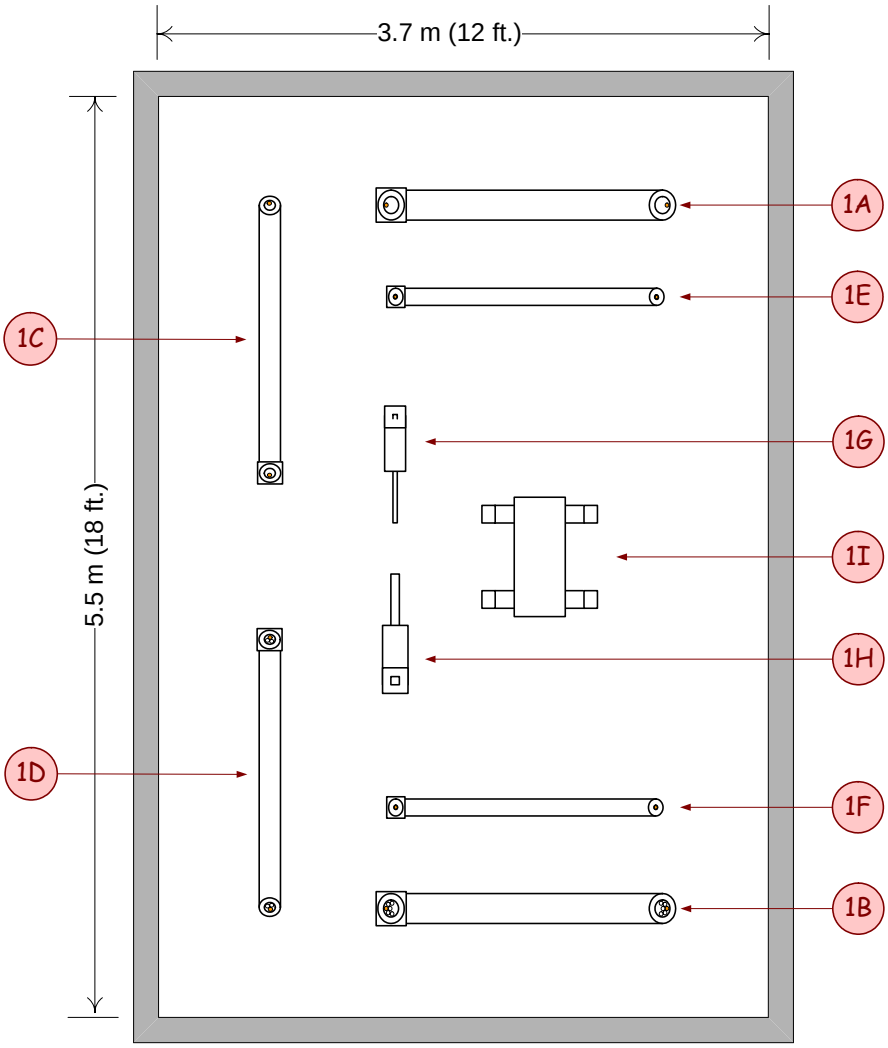

Plan View

Test #1 Configuration Layout
Test Specimens Direct Attachment with Hemyc

1A – 103 mm (4") Conduit (0% Fill)
1B – 103 mm (4") Conduit (30% Fill)
1C – 63 mm (2½") Conduit (0% Fill)
1D – 63 mm (2½") Conduit (30% Fill)
1E – 27 mm (1") Conduit (0% Fill)
1F – 27 mm (1") Conduit (30% Fill)
1G – Unistrut Support
1H – 5 cm X 5 cm (2" X 2") Tube Steel Support
1I – 46 cm X 61 cm X 20 cm (18" X 24" X 8") Junction Box

73766-0001
Rev. 05
03/31/2005

Figure 2. Example of Test Specimen Layout during Test #1 (Hemyc, Direct Attachment Configurations).

This arrangement of the test specimens is intended to maximize thermal exposures and minimize the potential for one specimen to influence the response of another specimen to the thermal environment (i.e., minimize shadowing).

The conduit will be supported from the furnace ceiling in a modified "U" configuration. The metal test deck will be adequately insulated to prevent interaction with the portion of the test specimens located outside the furnace and to protect the metal deck from structural failure during the 1-hour test. Each conduit will include one sharp 90-degree transition from the horizontal span to one of the vertical legs; a condolet fitting will be employed to provide the right angle transition from horizontal to vertical. At the other transition point a radius bend will be used. The two vertical runs of these test articles will be approximately 0.9 m (36 in) along each leg and the horizontal span will be approximately 1.5 m (60 in) (See Figures A1, A2, and A3 in Appendix A). The ERFBS will completely cover the test specimens within the furnace and extend through the test deck for a distance of 15 to 30 cm (6 – 12 in) above the test deck (See Figure A19 in Appendix A). All raceway supports shall be outside the furnace and shall not interfere with the ERFBS during testing.

A Hemyc ERFBS will be directly attached to the support structure analogs such that 30 cm (12 in) of their horizontal sections are exposed to the furnace environment. The junction box will be suspended from the test deck by Unistrut support members and protected with Hemyc through direct attachment (See figure A6 in Appendix A).

The vertical run of the Unistrut will be approximately 0.9 m (36 in) inside the furnace and the horizontal run will be 0.6 m (24 in) (See figure A8 in Appendix A).

The vertical run of the 5 cm x 5 cm (2 in. x 2 in) tube steel will be approximately 0.9 m (36 in) below the test deck and the horizontal run will be 0.6 m (24 in) (See figure A7 in Appendix A).

3.4.2 Test #2

The second test will be conducted on seven test specimens, which will be protected with Hemyc ERFBS. Two of the cable trays and one cable drop will incorporate the necessary framework to provide a minimum of 50-mm (2 in) air gaps between the ERFBS and item. The nominal thickness of the Hemyc ERFBS enclosing the framed components will be 38 mm (1½ in). The remaining two cable trays, cable drop and junction box will be protected with directly attached (i.e., without air gap framework) Hemyc with a nominal wrap thickness of 50-mm (2 in).

One possible arrangement of the test specimens in the furnace during Test #2 is shown in Figure 3. The seven test specimens will include:

- A 914-mm (36 in) cable tray framed for 50-mm (2”) air gap,
- A 914-mm (36 in) cable tray employing direct attachment of the Hemyc,
- A 305-mm (12 in) cable tray framed for 50-mm air gap,
- A 305-mm (12 in) cable tray employing direct attachment of the Hemyc,
- A small cable drop loop employing direct attachment of the Hemyc,
- A 46 cm x 61 cm x 20 cm (18" x 24" x 8") junction box employing direct attachment of the Hemyc suspended from the top of the furnace with separately protected (direct attachment, ceramic fiber blanket) supports, and
- A small cable drop loop framed for 50-mm air gap.

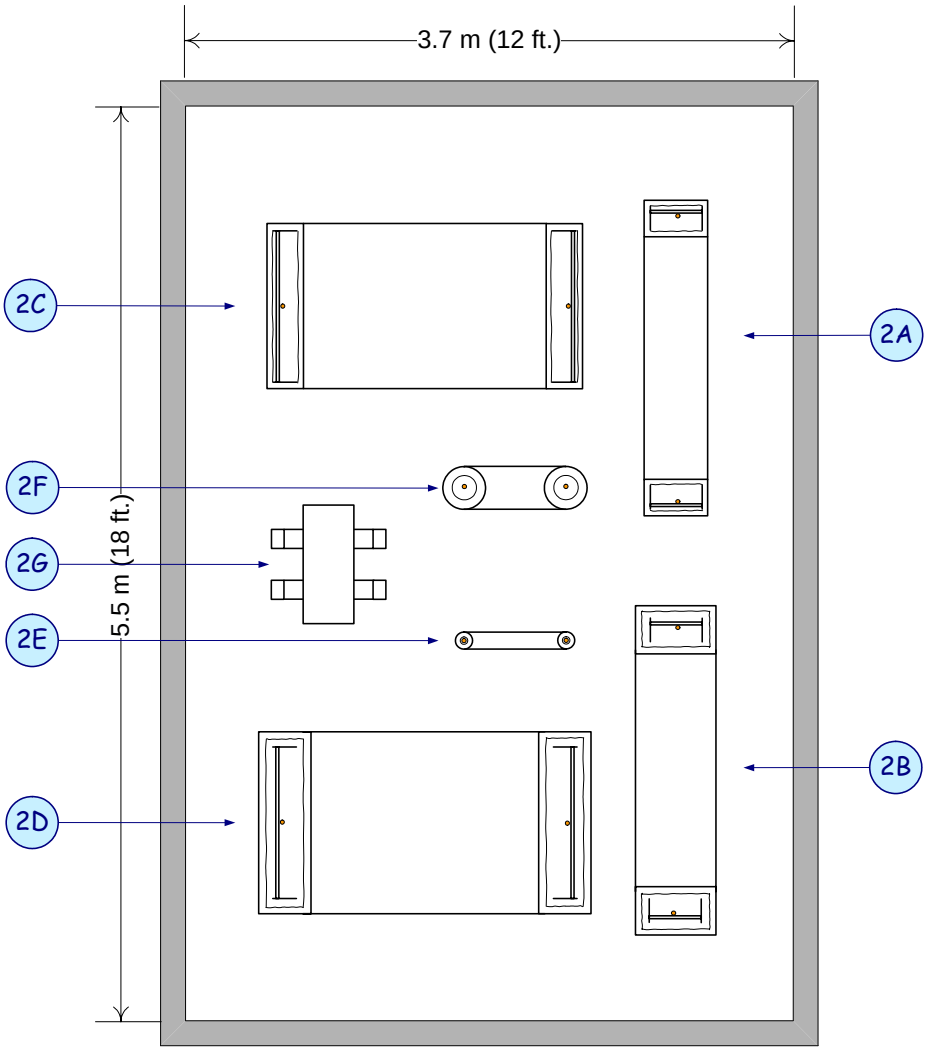

Plan View

Test #2 Configuration Layout
Test Specimens Protected in Hemyc

2A – 305 mm (12") Cable Tray (direct attachment)
2B – 305 mm (12") Cable Tray (5 cm [2"] Air Gap)
2C – 914 mm (36") Cable Tray (direct attachment)
2D – 914 mm (36") Cable Tray (5 cm [2"] Air Gap)
2E – Cable Drop Loop (direct attachment)
2F - Cable Drop Loop (5 cm [2"] Air Gap)
2G – 46 cm X 61 cm X 20 cm (18" X 24" X 8") Junction Box (suspended by supports, enclosed in Hemyc by direct attachment)

73766-0002
Rev. 04
03/31/2005

Figure 3. Example of Test Specimen Layout during Test #2 (Hemyc, Framed for 50-mm (2”) Air Gap and Direct Attachment Configurations).

The cable trays will be supported from the furnace ceiling in a modified "U" configuration. The metal test deck of the test specimens will be adequately insulated to prevent interaction with the portion of the test specimens located outside the furnace and to protect the metal deck from structural failure during the 1-hour test. Each tray will include one sharp 90-degree transition from the horizontal span to one of the vertical legs. At the other transition a radius bend will be used. The cable trays will be modified and assembled to accommodate the right angle turn. The two vertical runs of these test articles will be approximately 0.9 m (36 in) along each leg inside the furnace and the horizontal span will be approximately 1.5 m (60 in) (See Figures A4 and A5 in Appendix A). The ERFBS will completely cover the test specimens within the furnace and extend through the test deck for a distance of 15 to 30 cm (6 – 12 in) above the test deck (See Figure A20 in Appendix A). All raceway supports shall be outside the furnace and shall not interfere with the ERFBS during testing.

The junction box will be supported from the furnace ceiling by Unistrut® channels (See Figure A6 in Appendix A). The junction box supports will be directly protected with a ceramic fiber blanket separately from the box.[3] (Note: The junction box supports are not considered as part of this test and will not be instrumented; however any failure in their performance during the test will be noted and investigated as deemed appropriate.) Two wrapped cable bundles (one with air gap, the other without) will be dropped through the top of the furnace and looped in the furnace and routed back up through the test deck (See figure A9 in Appendix A).

3.4.3 Test #3

The final test will be conducted on ten test specimens, all of which will be wrapped with the M.T. 3-hour rated ERFBS without any framework to provide air gaps between the wrap and raceway. The nominal thickness of the M.T. ERFBS will be approximately

[3] The junction box supports were protected with 50-mm (2") thick raw ceramic fiber blankets (not Hemyc) in Test #2 and kept thermally isolated from the box.

133 mm (5¼ in) for the cable drop. The nominal M.T. thickness for conduits and junction boxes will be 95 mm (3¾ in).

Figure 4 shows a possible configuration of the test specimens in the furnace during Test 3. The test specimens protected with M.T. during Test #3 will include:

- A 103-mm (4 in) conduit without additional cables,
- A 103-mm (4 in) conduit loaded with the maximum fill (30%) of cables,
- A 27-mm (1 in) conduit and condolet LB assembly without cables,
- A 27-mm (1 in) conduit and condolet LB assembly with additional cables (30% fill),
- A 63-mm (2½ in) conduit and condolet LB assembly with no cables,
- A 63-mm (2½ in) conduit and condolet LB assembly with cables (30% fill),
- A small cable drop loop,
- A partially protected Unistrut® support assembly,
- A partially protected 5 cm x 5 cm (2” x 2”) square steel tube support assembly, and
- A 46 cm X 61 cm X 20 cm (18" x 24" x 8") junction box

As in the other two tests, the conduit assemblies will be supported from the furnace ceiling in a modified “U” configuration. The metal deck of the test specimens will be adequately insulated to prevent interaction with the portion of the test specimens located outside the furnace and to protect the metal deck from structural failure during the 3-hour test. Each conduit will include one sharp 90-degree transition from the horizontal span to one of the vertical legs and a radius bend will be used for the other transition. A condolet fitting will be employed to provide the right angle turn. The two vertical runs of these test articles will be approximately 0.9 m (36 in) along each leg inside the furnace and the horizontal run will be approximately 1.5 m (60 in) (See Figures A1, A2, and A3 in Appendix A). The ERFBS will completely cover the test specimens within the furnace and extend through the test deck for a distance of 15 to 30 cm (6 – 12 in) above the test deck (See Figure A19 in Appendix A). All raceway supports shall be outside the furnace and shall not interfere with the ERFBS during testing.

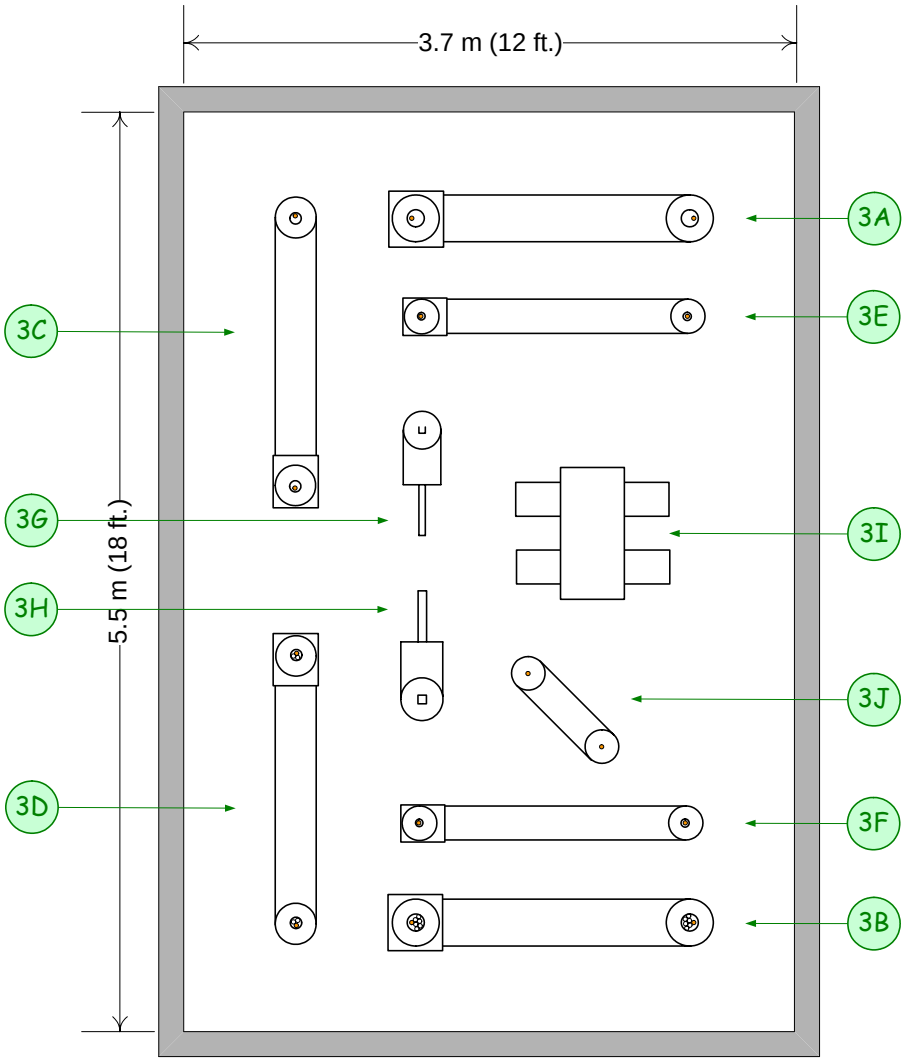

Plan View

Test #3 Configuration Layout
Test Specimens Direct Wrap with M.T.

3A – 103 mm (4") Conduit (0% Fill)
3B – 103 mm (4") Conduit (30% Fill)
3C – 63 mm (2½") Conduit (0% Fill)
3D – 63 mm (2½") Conduit (30% Fill)
3E – 27 mm (1") Conduit (0% Fill)
3F – 27 mm (1") Conduit (30% Fill)
3G – Unistrut Support Structure
3H – 5 cm X 5 cm (2" X 2") Steel Support Structure
3I – 46 cm X 61 cm X 20 cm (18" X 24" X 8") J-Box
3J - #8 AWG Bare Copper Wire Drop

73766-0003
Rev. 06
03/31/2005

Figure 4. Example of Test Specimen Layout during Test #3 (M.T., Direct Wrap Configurations).

An M.T. ERFBS will be directly attached to the support structure analogs such that 30 cm (12 in) of their horizontal sections are exposed to the furnace environment. The junction box will be suspended from the test deck by Unistrut support members and protected with M.T. through direct attachment (See figure A6 in Appendix A).

The vertical run of the Unistrut will be approximately 0.9 m (36 in) within the furnace and the horizontal run will be 0.6 m (24 in) (See figure A8 in Appendix A).

The vertical run of the 5 cm x 5 cm (2 in. x 2 in) tube steel will be 0.9 m (36 in) in the furnace and the horizontal run will be 0.6 m (24 in) (See figure A7 in Appendix A).

One wrapped cable bundle will be dropped through the top of the furnace and looped in the furnace and routed back up through the test deck (See figure A9 in Appendix A).

3.5 Conduct of Tests

Each of the primary test runs will be conducted by exposing the test specimens to the time-temperature curve (Fig. 1) as specified in ASTM E 119, Standard Test Methods for Fire Tests of Building Construction and Materials. By this method, the temperature inside the furnace should reach 927 C (1700 F) at the end of the one-hour tests and 1052 C (1925 F) at the end of the 3-hour test. Figure 1 shows the desired temperature profile as a function of time. The time-temperature curve shall be maintained within the limits established in ASTM E 119.

Upon completion of each ASTM E 119 temperature run (one-hour and three-hours), the complete test assembly will be removed from the furnace and a hose stream will be applied to all of the test articles. The hose stream test will consist of a water stream applied at random to all exposed surfaces of the test specimens through a 38-mm (1½ in) fog nozzle set at a discharge angle of 15 degrees with a nozzle pressure of 517 kPa (75 psi) at a minimum discharge rate of 284 lpm (75 gpm) with the tip of the nozzle at a

maximum distance of 3 m (10 ft) from the test specimen. The hose stream application will be continued for at least 5 minutes upon completion of the test.

A visual inspection of all test articles will be conducted following the hose stream test. The purpose of the inspection will be to ascertain whether the ERFBS remained intact during the fire exposure and the cooling and mechanical impact of the hose stream test without developing any openings or breaches. Visible indications of an opening will include obvious tears or displacement of a barrier section or a view of the covered raceway through the fire barrier.

Photographs and video of the test specimens, both prior to and after disassembly, will be taken during the post-test inspection and recorded as part of the test documentation.

3.6 Instrumentation and Data Collection

The primary data to be generated in these tests will be component temperatures as indicated by insulated 24-gage Type-K thermocouples (Special Limit 32 to 2282°F range and 2°F or 0.4% tolerance value per ASTM E230-ANSI MC 96.1). The junction box temperatures will be monitored using Type-K thermocouples sheathed in Inconel. These thermocouples have been calibrated and certified to accuracies within 4°F of the comparison standard over a temperature range of 70°F to 1000°F. Test #1 will require the use of approximately 380 thermocouples to monitor the test specimen temperatures. Test #2 will require about 335 thermocouples. Approximately 400 thermocouples will be needed for Test #3. The outputs of the thermocouples will be sent to a computerized data collection unit for recording and storage. Each thermocouple's output will be recorded at least once per minute. It is expected that Teflon-coated thermocouples will be used during Test #3 to ensure that there will not be interference from any gases evolving from the M.T. ERFBS.

Figures A10 through A18 in Appendix A show the preferred attachment locations of the thermocouples on the test specimens. Routing the thermocouples for monitoring the tray temperatures will be by laying the bundles in the tray at the entry point and branching the

thermocouples off for mechanical attachment to the tray rails and bare copper conductor at the appropriate locations (See figures A13 and A14 in Appendix A). Similarly, for the cable drop thermocouples, the thermocouples will be bundled with the cable drop cables at the points of entrance and exit at the ceiling of the furnace and branching off the thermocouples for attachment to the bare copper conductor wire at 150-mm (6 in) spacing intervals (See figure A18 in Appendix A).

Each conduit will have thermocouples mechanically fastened to the side or bottom surface located along the outside perimeter of the "U" shape (See Figures A10, A11, and A12, in Appendix A). The routing of thermocouples for monitoring the temperature of the conduit will require that a series of small thermocouple bundles be placed around the circumference of the conduit and run to their individual attachment locations between the conduit and ERFBS. In order to minimize the effect of these small bundles on the test results, the conduit thermocouples will be run in underneath the ERFBS from both ends of the test specimen. The bare copper wire routed through the interior of each conduit test specimen will be instrumented with thermocouples installed with a maximum spacing of 150-mm (6 in) along its length. The junction boxes and condolet fittings will have at least one thermocouple attached to each side located at or as closely as possible to the geometric center of the side walls.

Note that the thermocouple locations indicated in these figures are for information purposes only. The thermocouples will be installed, except as noted, at 150-mm (6 in) intervals along the conduits, cable tray rails, and bare #8 copper wires in accordance with the guidance provided in Supplement 1 to Generic Letter (GL) 86-10. The instrumented bare #8 copper wire will be embedded within the copper wire bundles of the "loaded" raceways to protect the thermocouples from physical damage when the bundles are pulled through the raceways. Thermocouples will be attached to the raceway vertical legs located 25-mm (1 in) above the top of the test deck and 25-mm (1 in) below the exposed surface of the insulation on the bottom of the test deck.

3.7 Follow-on Tests

The decision to plan and conduct follow-on tests will be made by NRC (RES) on the basis of the primary test results.

4 REPORTING AND DOCUMENTATION

For each test conducted, the testing laboratory shall produce a draft report within two weeks of completion of the test. Each draft report (including electronic data and color photographs) will be submitted to SNL for a one-week comment period. The draft report will contain a summary of the thermocouple data and a simple analysis on the effects of cable mass on ERFBS performance. Upon receipt of comments, the test laboratory shall issue the final test report within two weeks to SNL. The final report shall contain all thermocouple data (including plots and location maps), QA documentation and construction drawings and ERFBS installation details. Thermocouple data plots will include graphs of (1) each individual temperature monitored during the test, (2) graphs of the average and maximum temperatures recorded for each test specimen exterior surface as a function of time, and (3) graphs of the average and maximum temperatures recorded for each test specimen instrumented bare #8 conductor as a function of time. SNL shall review the final report for accuracy and transmit the complete laboratory report to NRC (RES) within one week.

The test data will be analyzed and the fire barrier performance will be evaluated based on the acceptance criteria.

It should be recognized that the possibility exists that these test results may form the technical basis for broad acceptance of these fire protection systems by NRC, or provided the basis for enforcement action or backfit requirements, as deemed appropriate.

5 REFERENCES

10 CFR, Part 50, Appendix R, Fire Protection Program for Operating Nuclear Power Plants.

Supplement 1 to Generic Letter 86-10, Fire Endurance Test Acceptance Criteria for Fire Barrier Systems used to Separate Redundant Safe Shutdown Trains within the Same Fire Area, March 25, 1994.

ASTM E 119 – 00a, Standard Test Methods for Fire Tests of Building Construction and Materials.

A Test Specimen Configuration Details and Thermocouple Location Plan

These diagrams are not to scale and indicate test specimens assembly and thermocouple installation details for illustrative purposes only.

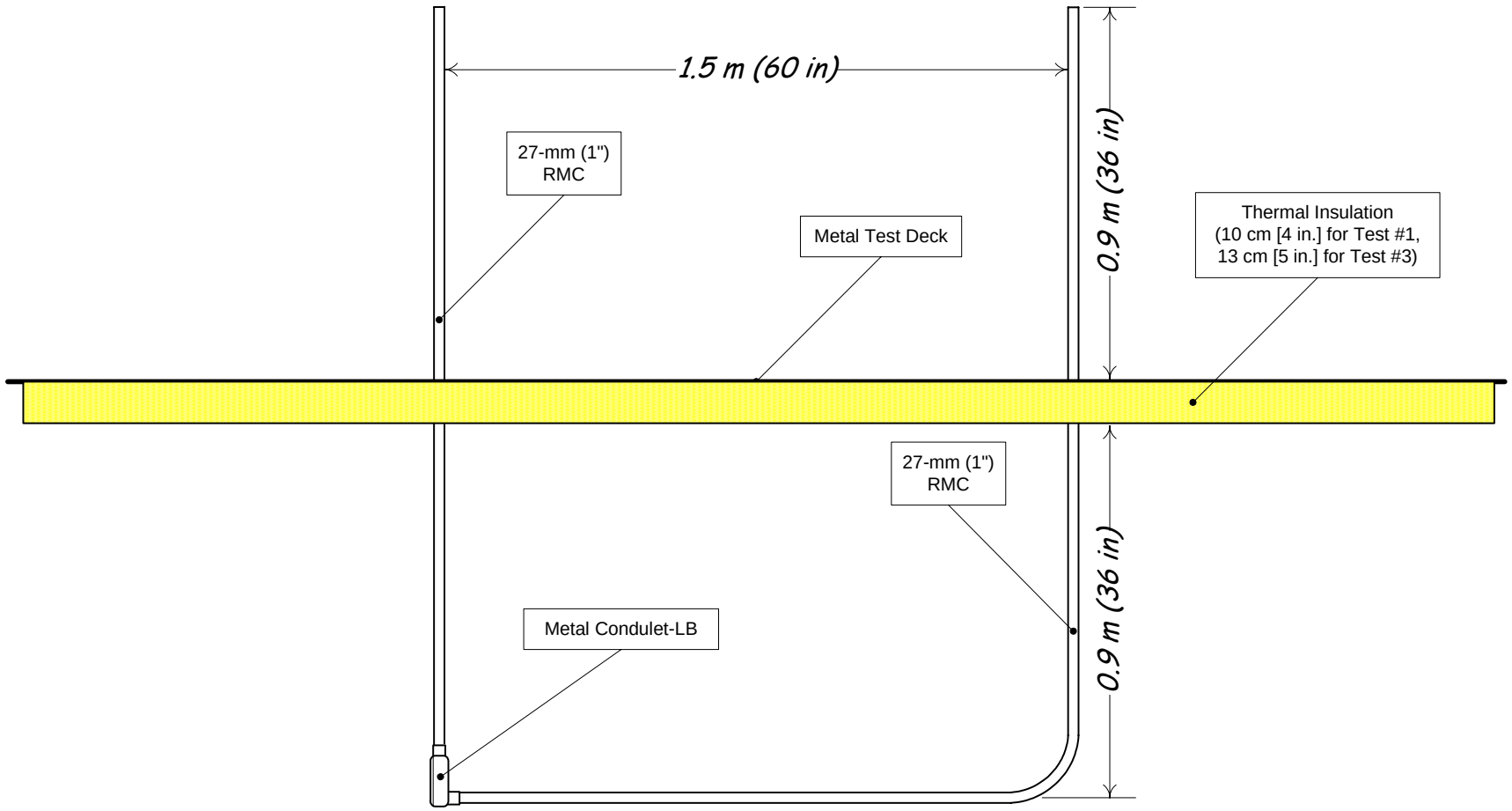

Figure A1: 27-mm (1-in) rigid metal conduit test specimens (side view with dimensions).

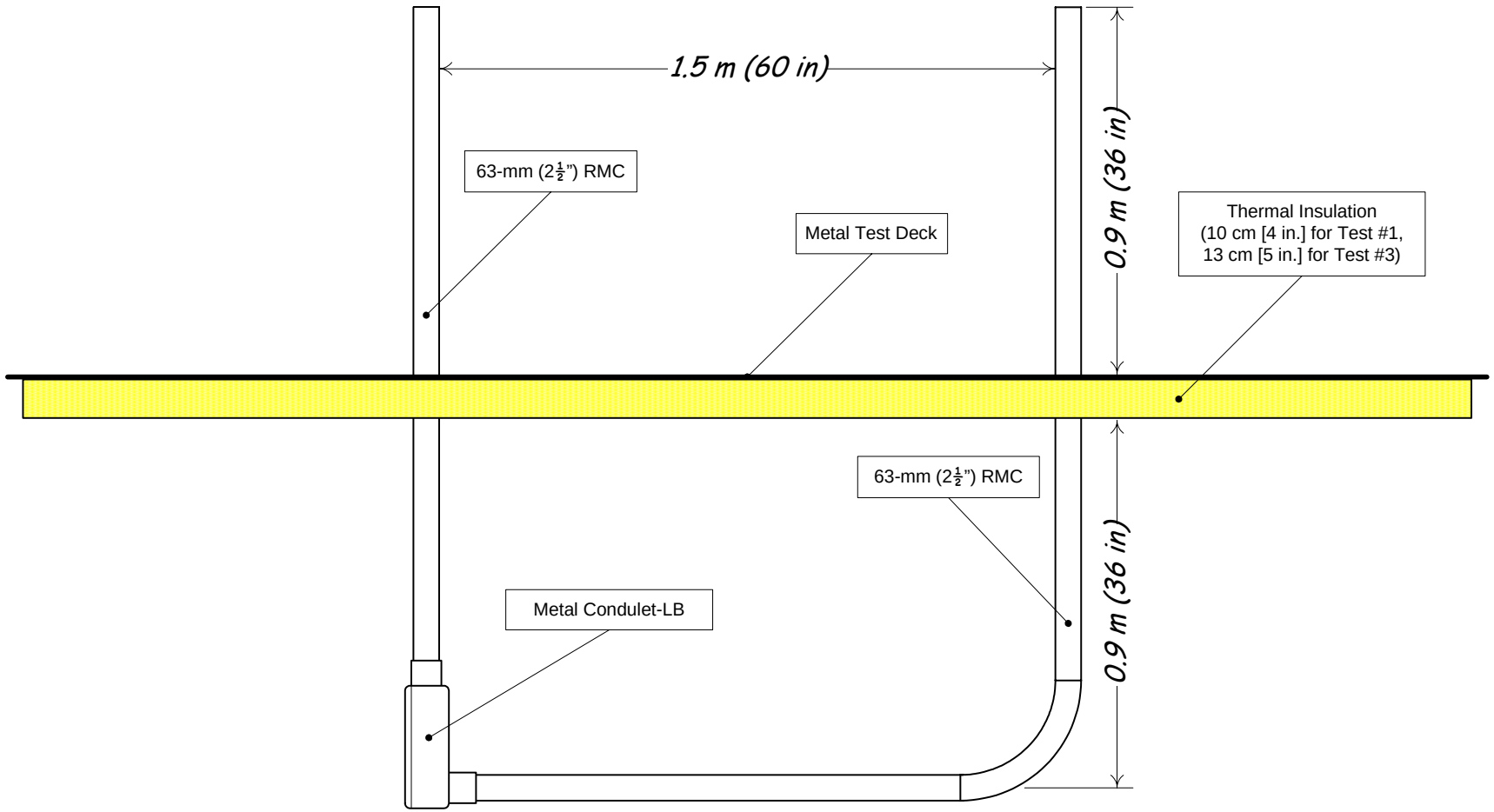

Figure A2: 63-mm (2½-in) rigid metal conduit test specimens (side view with dimensions).

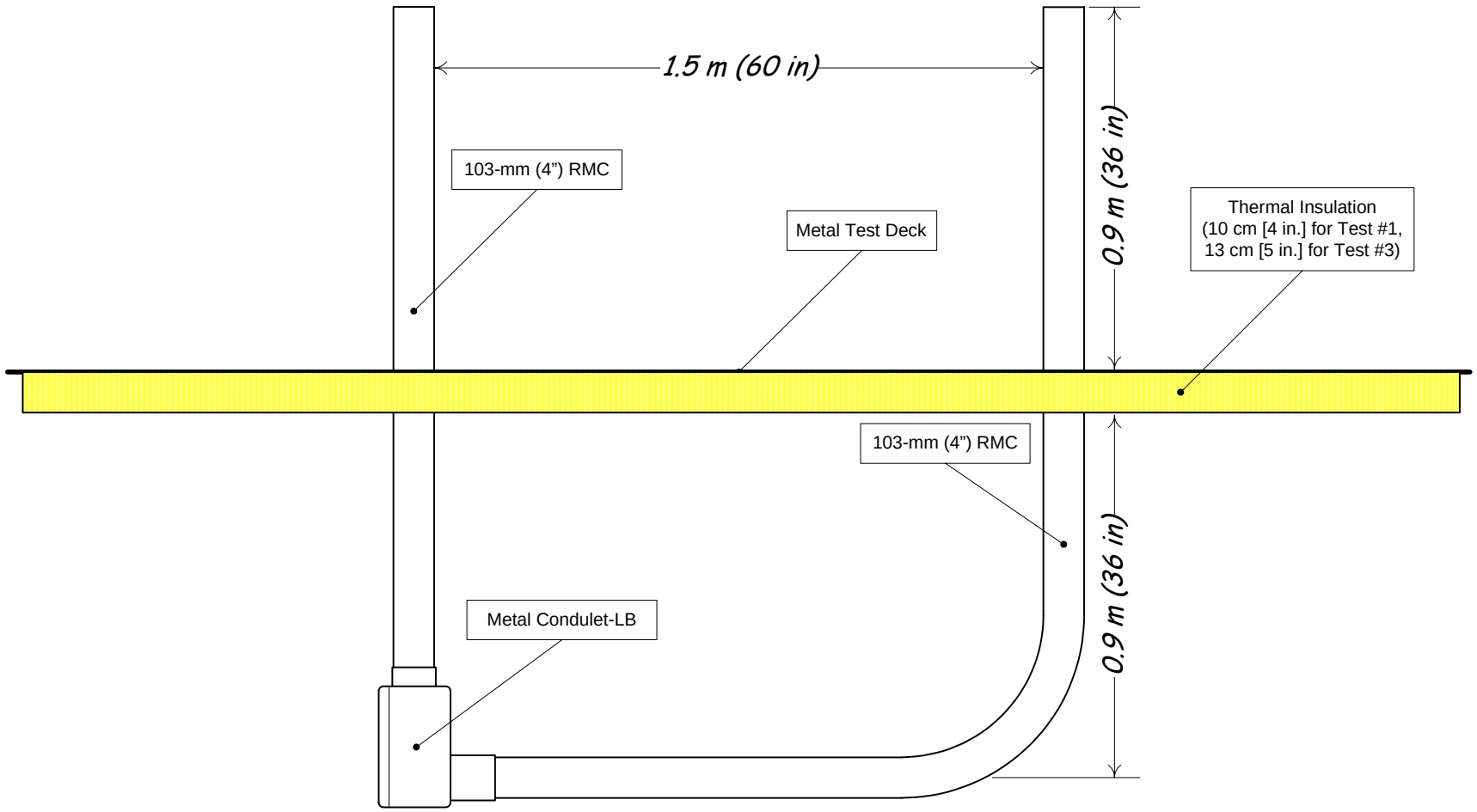

Figure A3: 103-mm (4-in) rigid metal conduit test specimens (side view with dimensions).

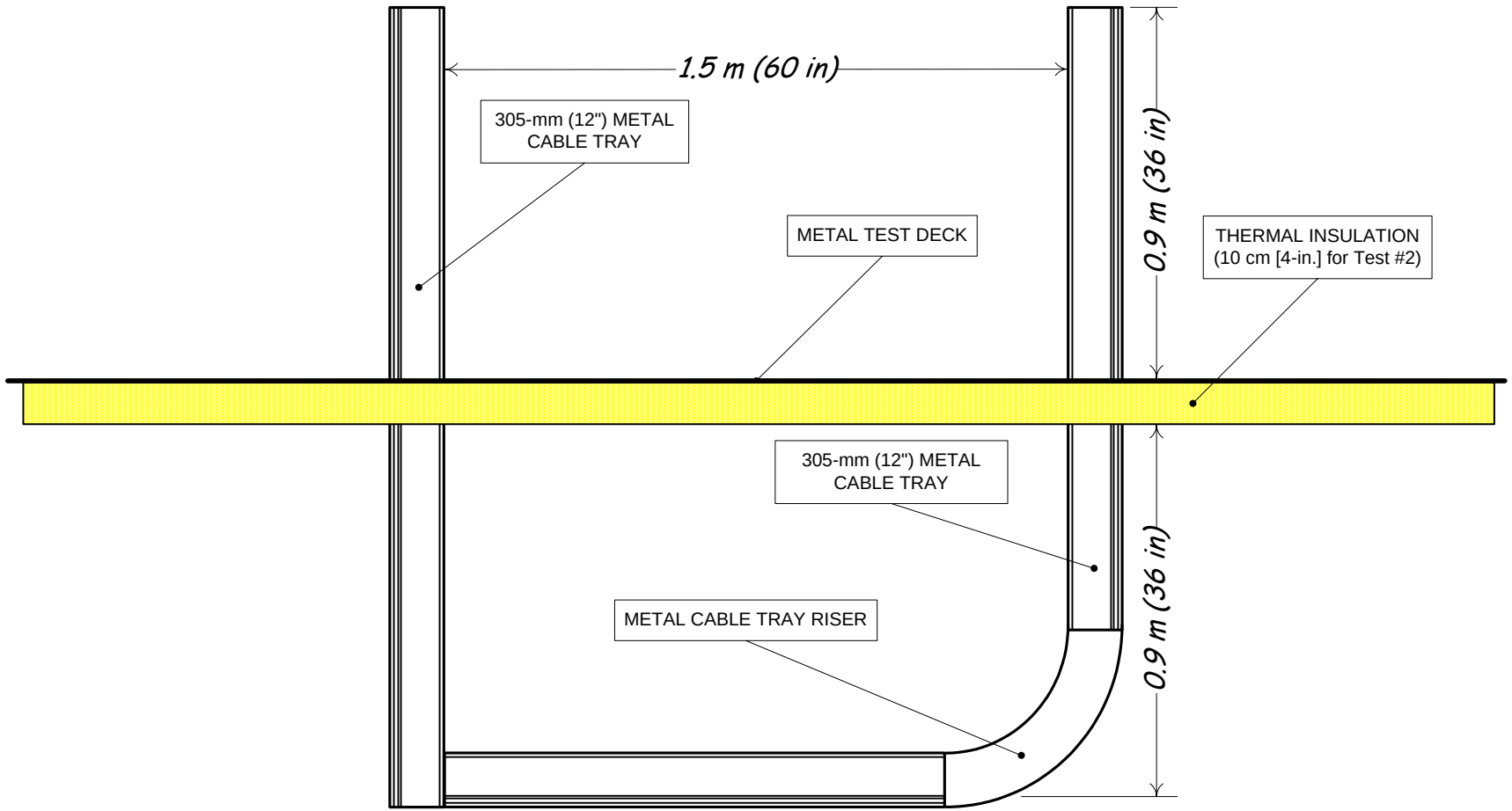

Figure A4: 305-mm (12-in) cable tray test specimens (side view with dimensions). Cable trays will be ladder type, 18-gage galvanized steel with 10 cm (4 in) high side rails and 23 cm (9 in) rung spacing.

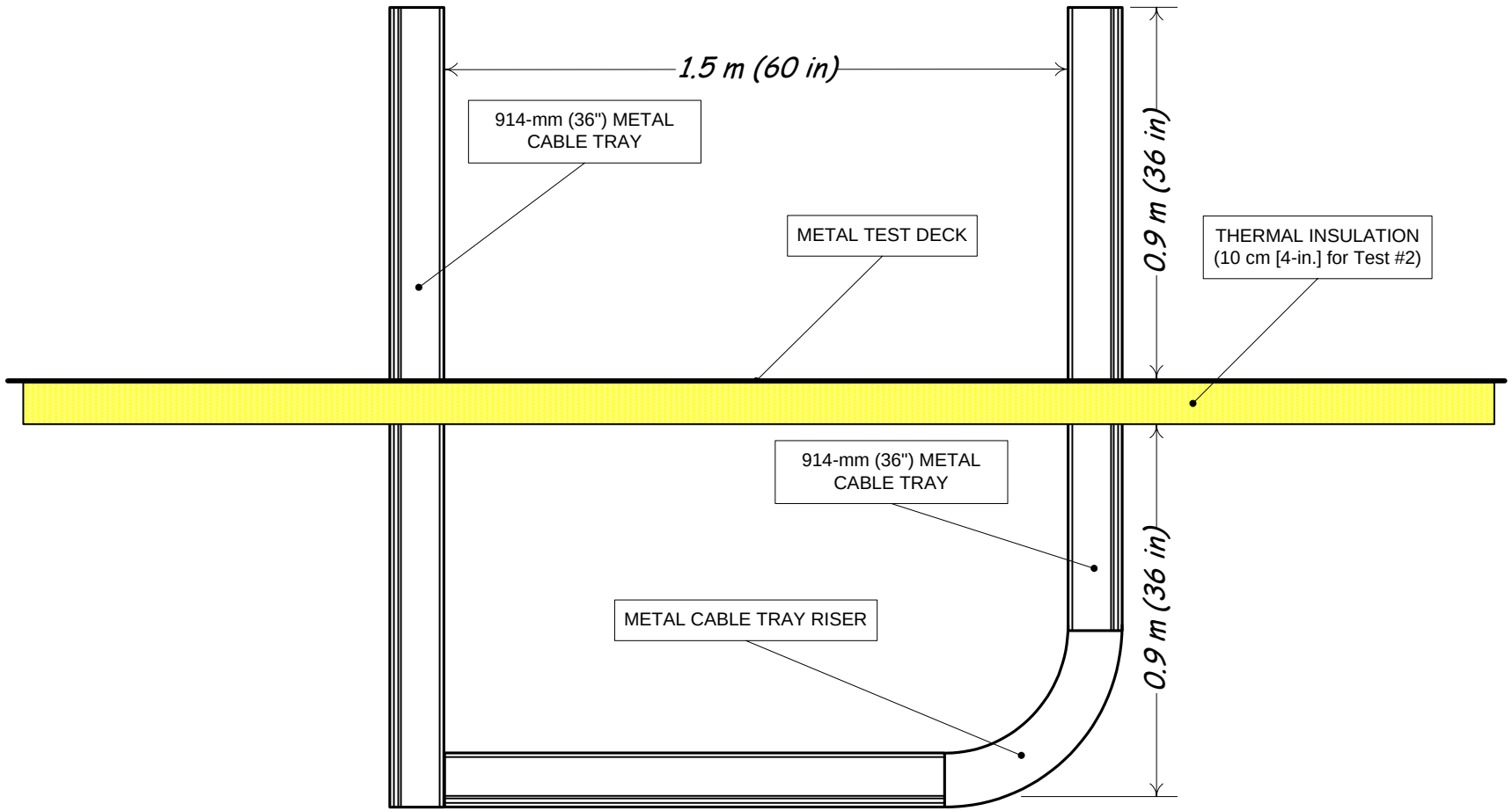

Figure A5: 914-mm (36-in) cable tray test specimens (side view with dimensions). Cable trays will be ladder type, 18-gage galvanized steel with 10 cm (4 in) high side rails and 23 cm (9 in) rung spacing.

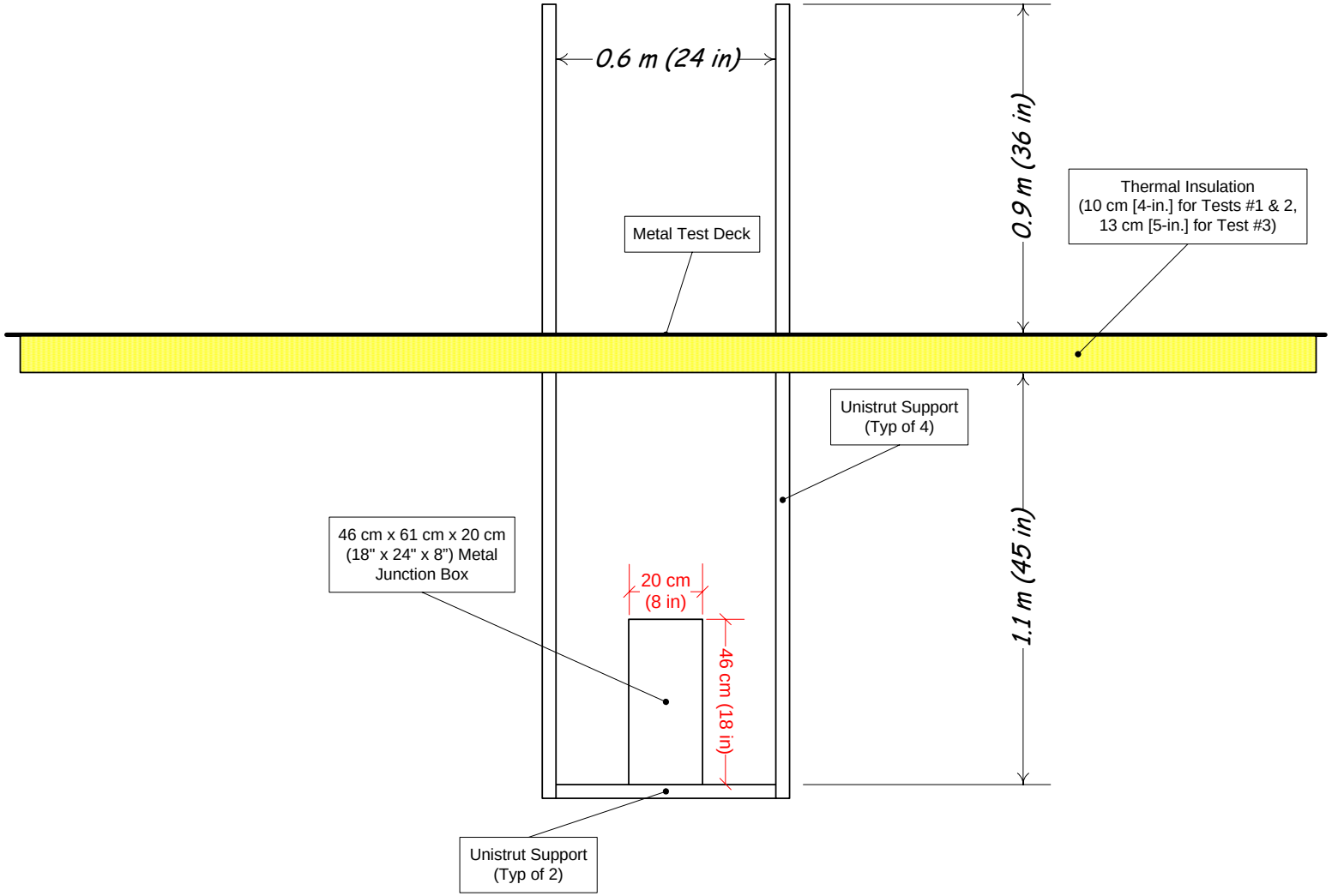

Figure A6 (a): Junction box test specimens (front elevation view with dimensions).

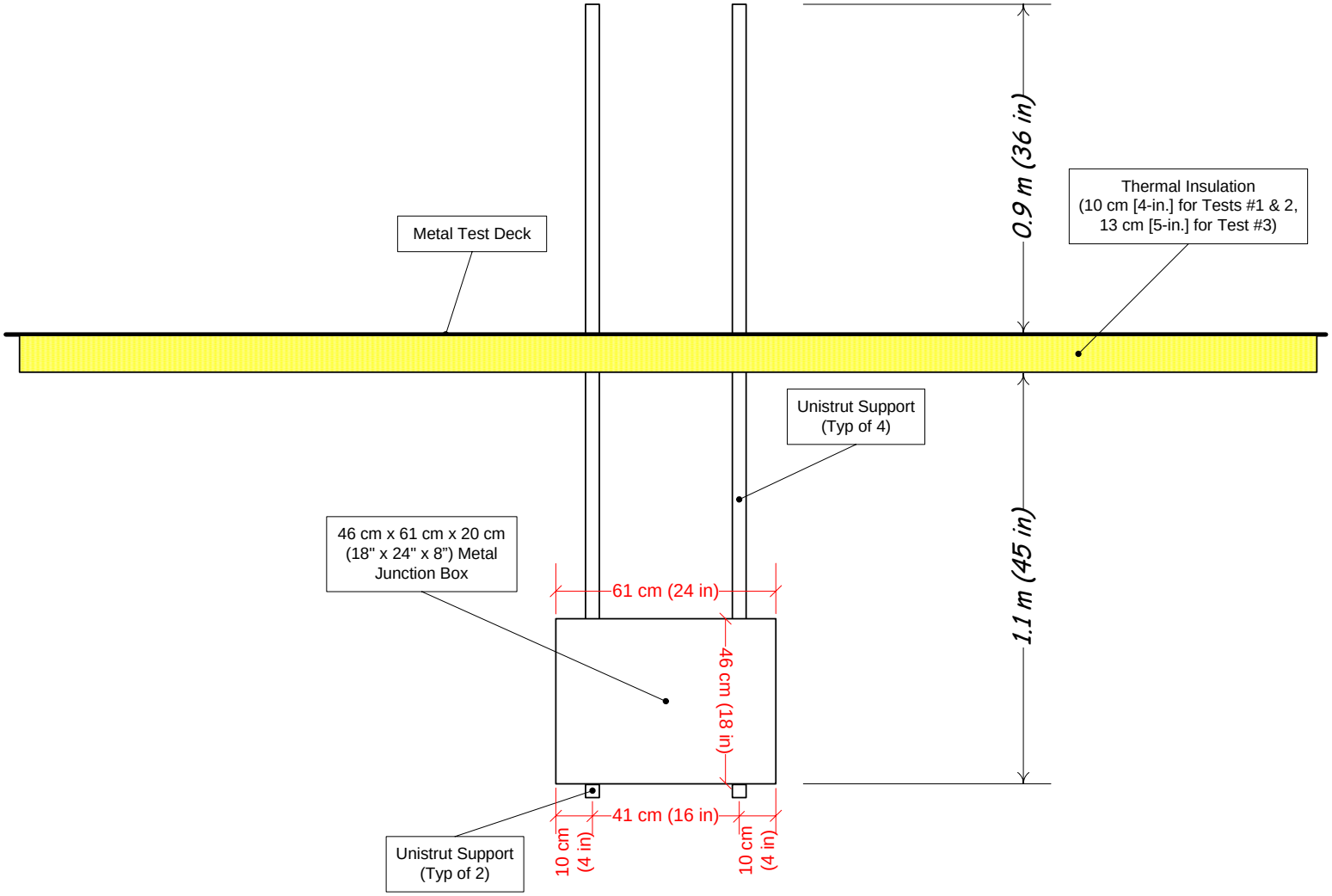

Figure A6 (b): Junction box test specimens (side elevation view with dimensions).

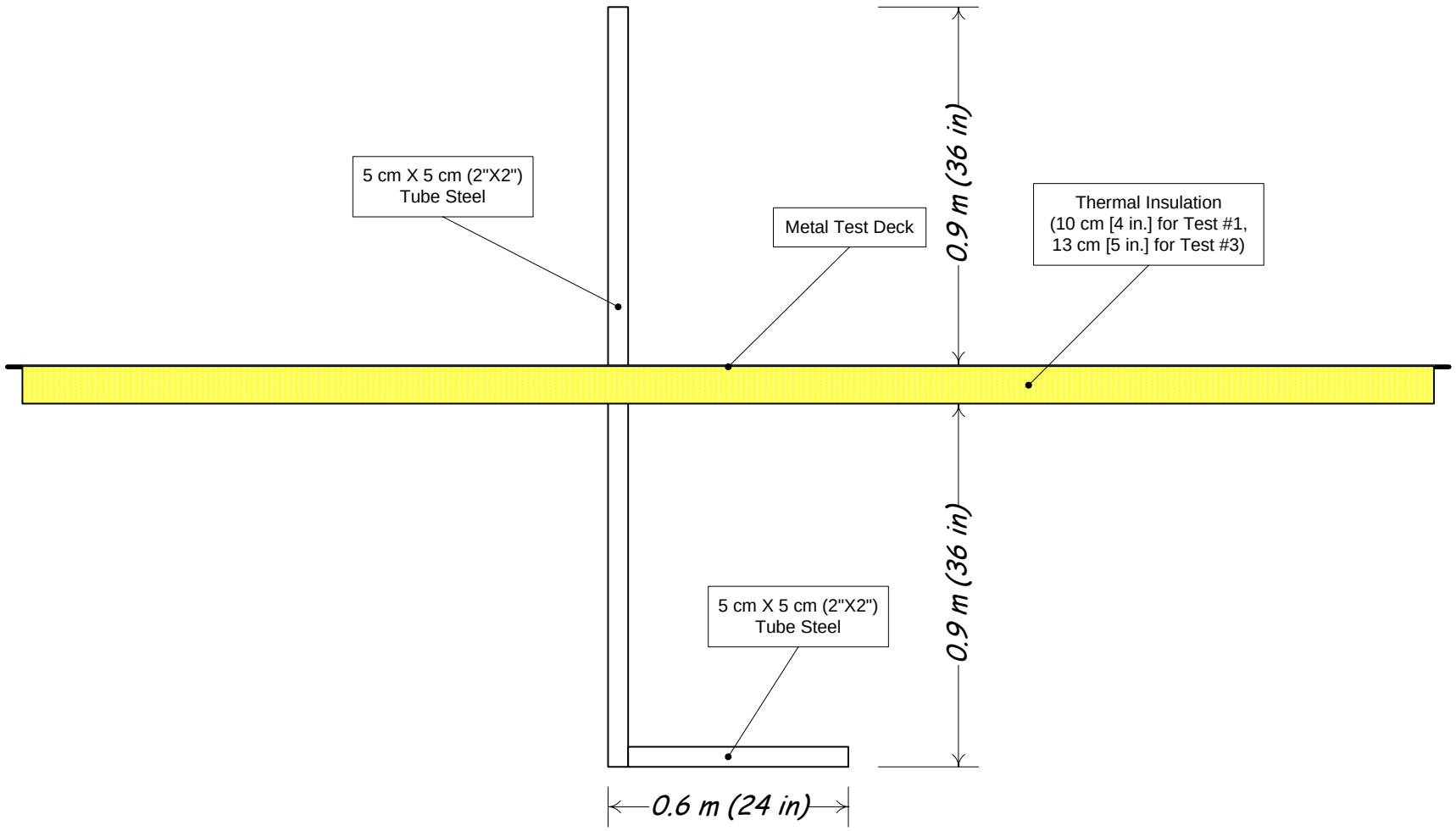

Figure A7: Tube steel support structure test specimens (side view with dimensions).

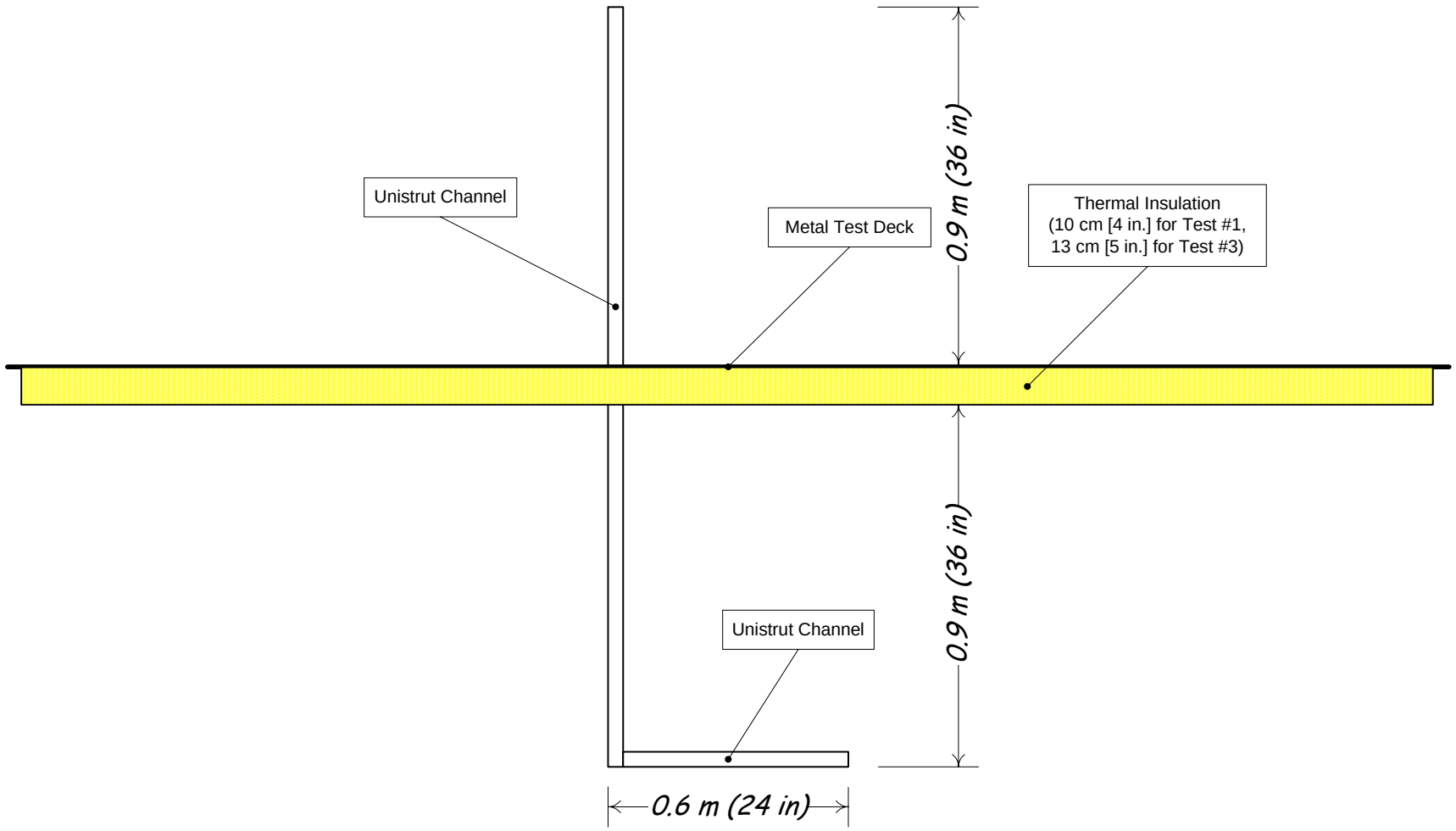

Figure A8: Unistrut® support structure test specimens (side view with dimensions).

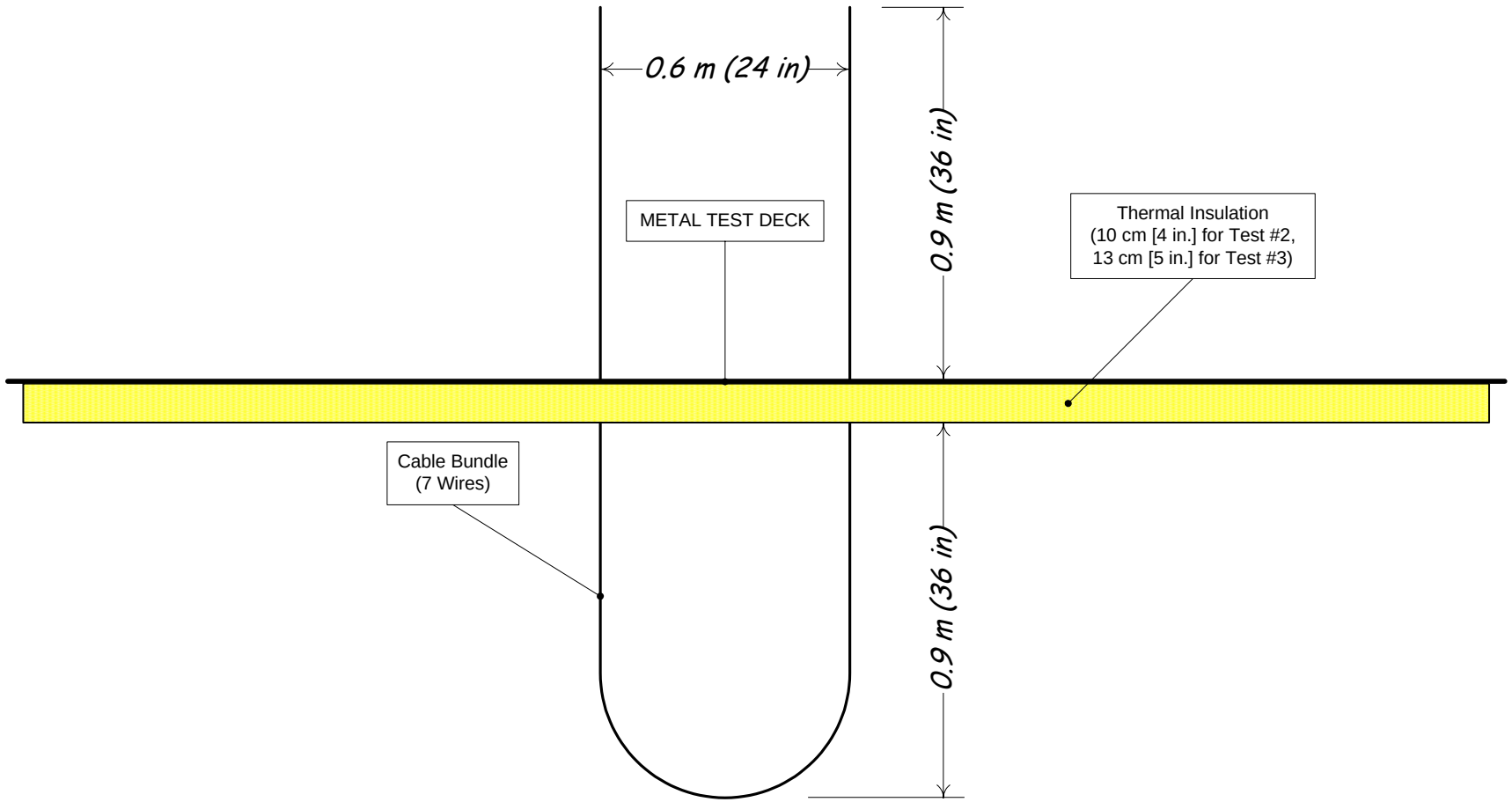

Figure A9: Unsupported cable-drop test specimens (side view with dimensions).

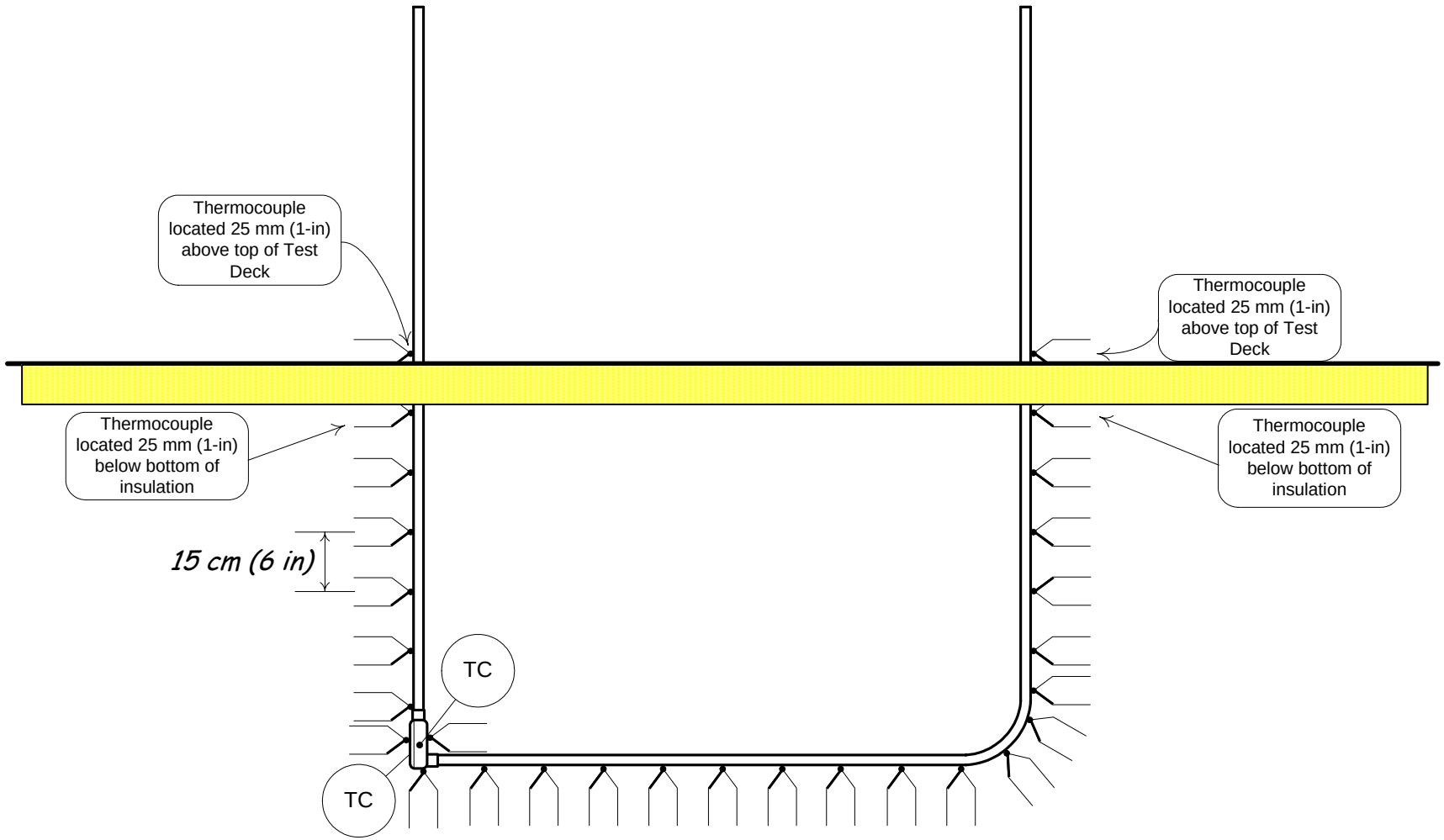

Figure A10: Thermocouple placement on 27-mm (1-in) conduit test specimens (additional thermocouples to be attached—at 150-mm [6-in] spacing intervals—to a bare #8 copper wire routed through conduit).

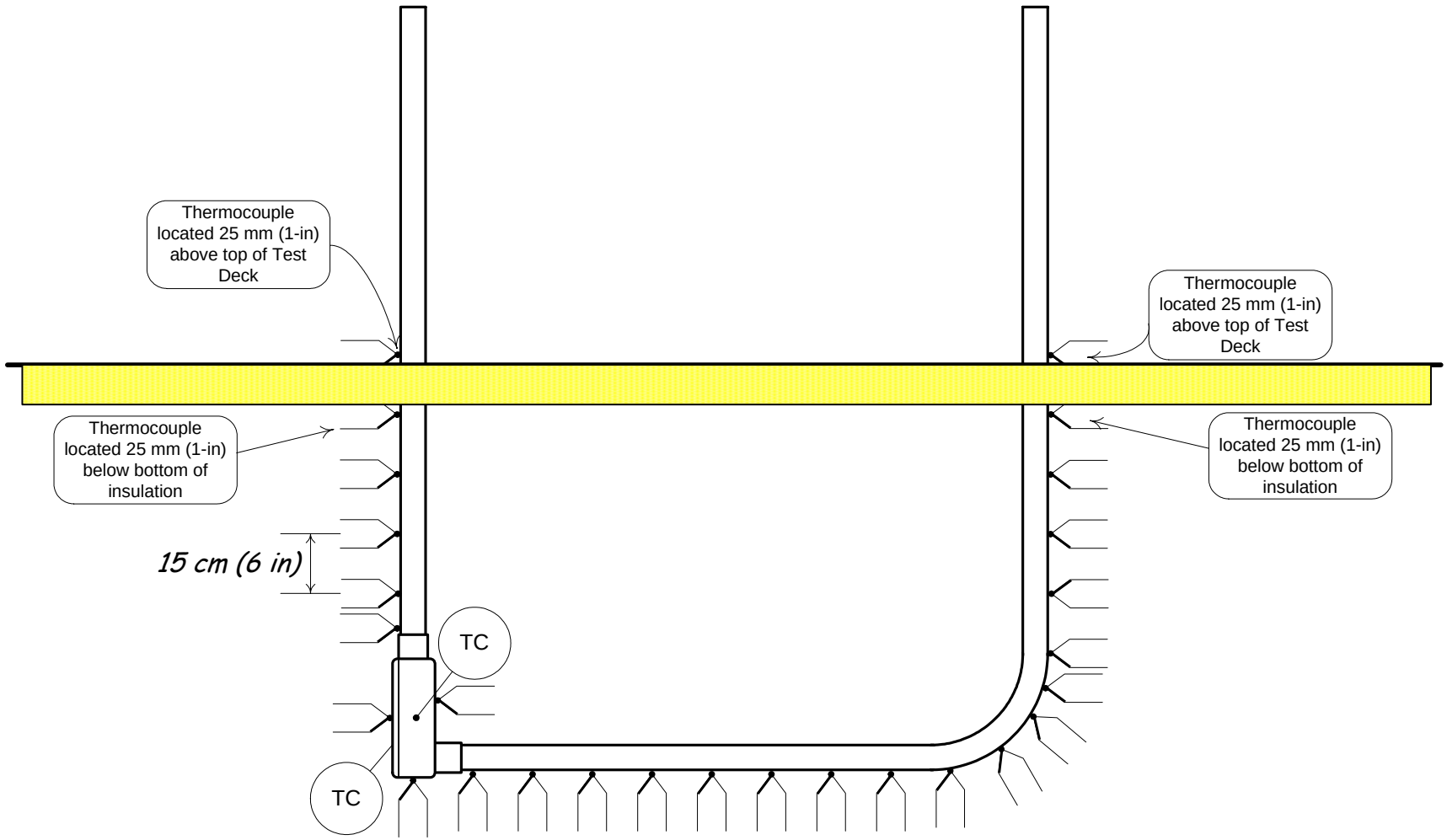

Figure A11: Thermocouple placement on 63-mm (2½-in) conduit test specimens (additional thermocouples to be attached—at 150-mm [6-in] spacing intervals—to a bare #8 copper wire routed through conduit).

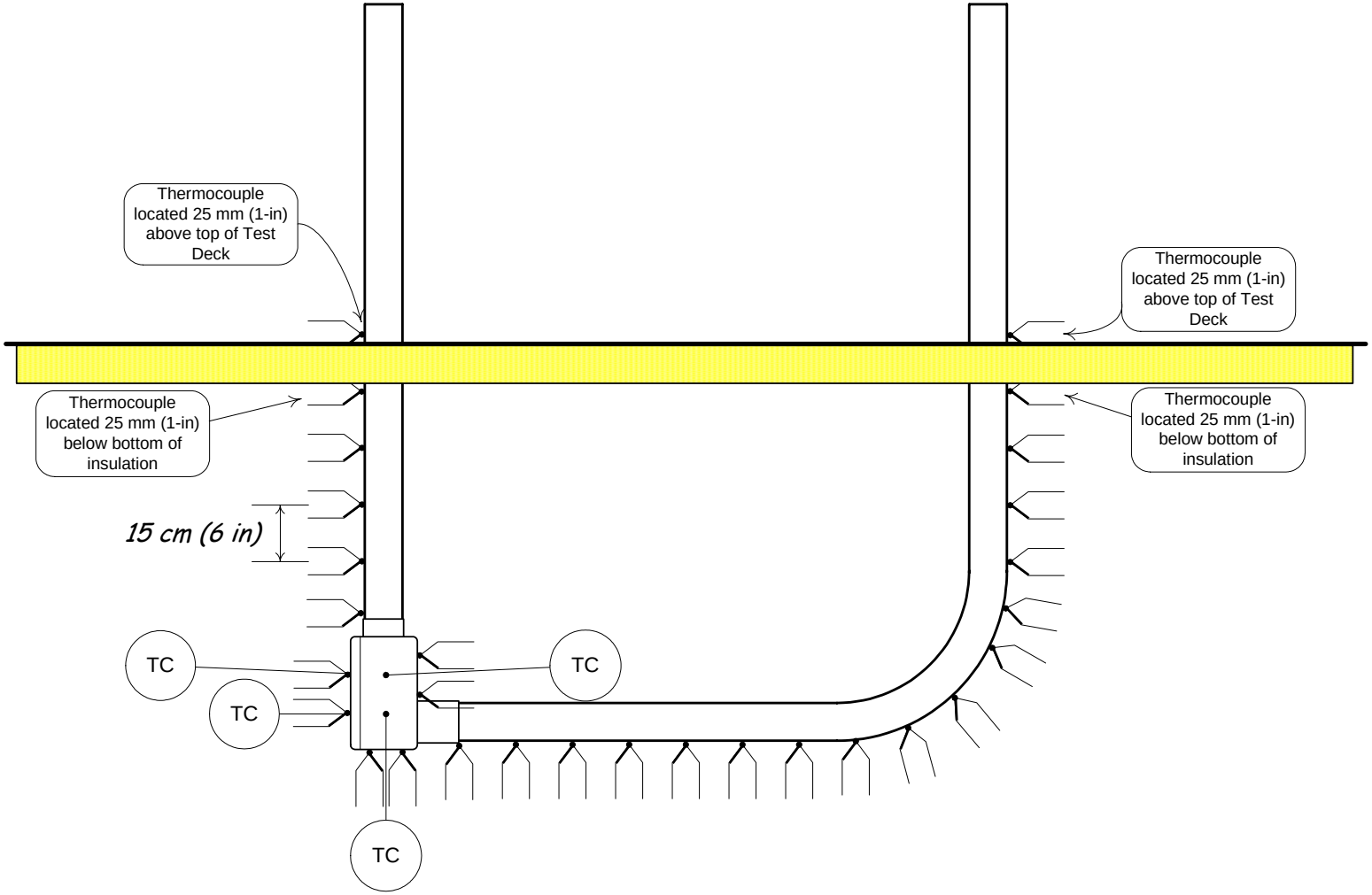

Figure A12: Thermocouple placement on 103-mm (4-in) conduit test specimens (additional thermocouples to be attached—at 150-mm [6-in] spacing intervals—to a bare #8 copper wire routed through conduit).

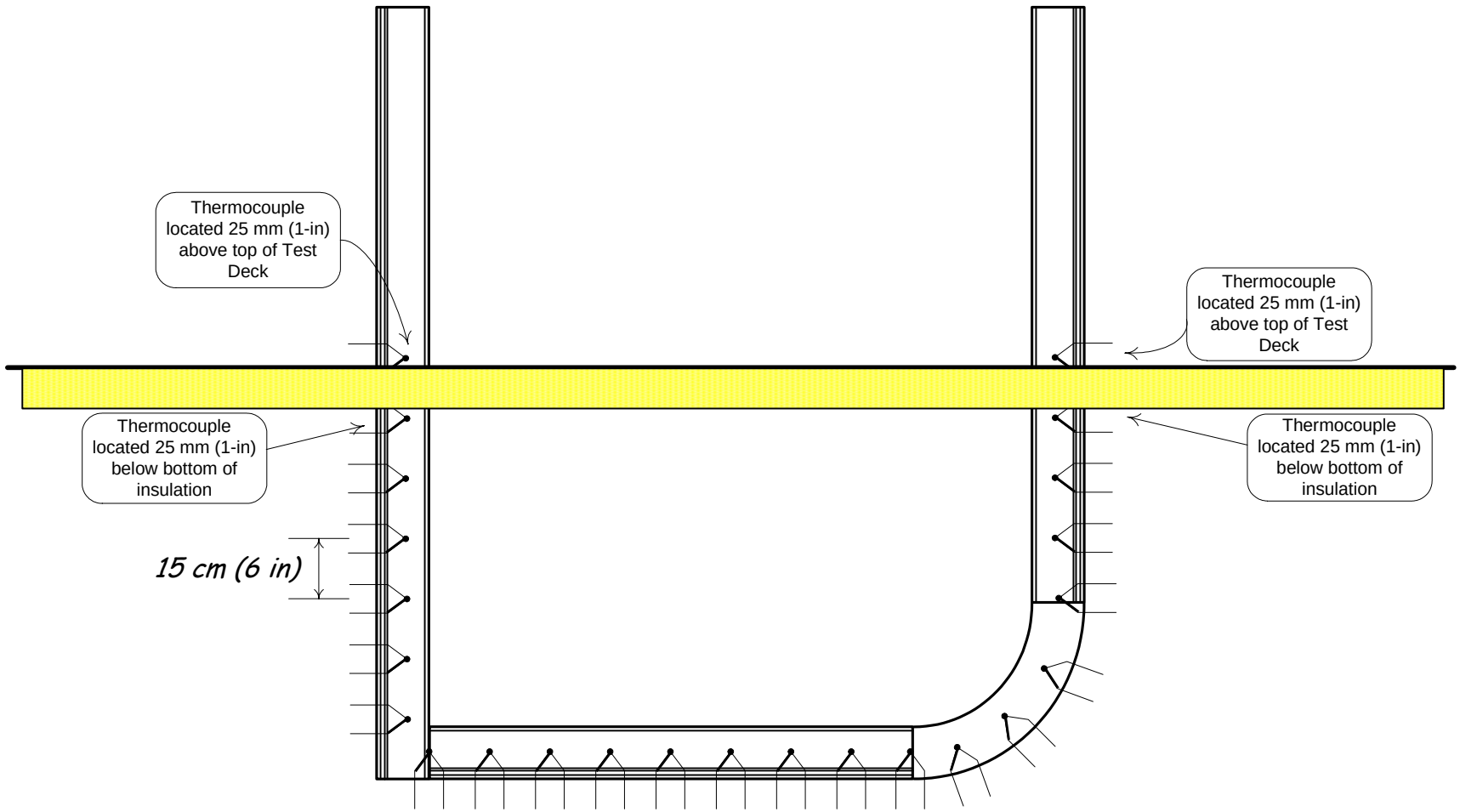

Figure A13: Thermocouple placement on 305-mm (12-in) cable tray test specimens (side view only, additional thermocouples to be attached at 150-mm [6-in] spacing intervals on other side rail and to a bare #8 copper wire routed along the mid-axis of the tray on the bottom of the rungs).

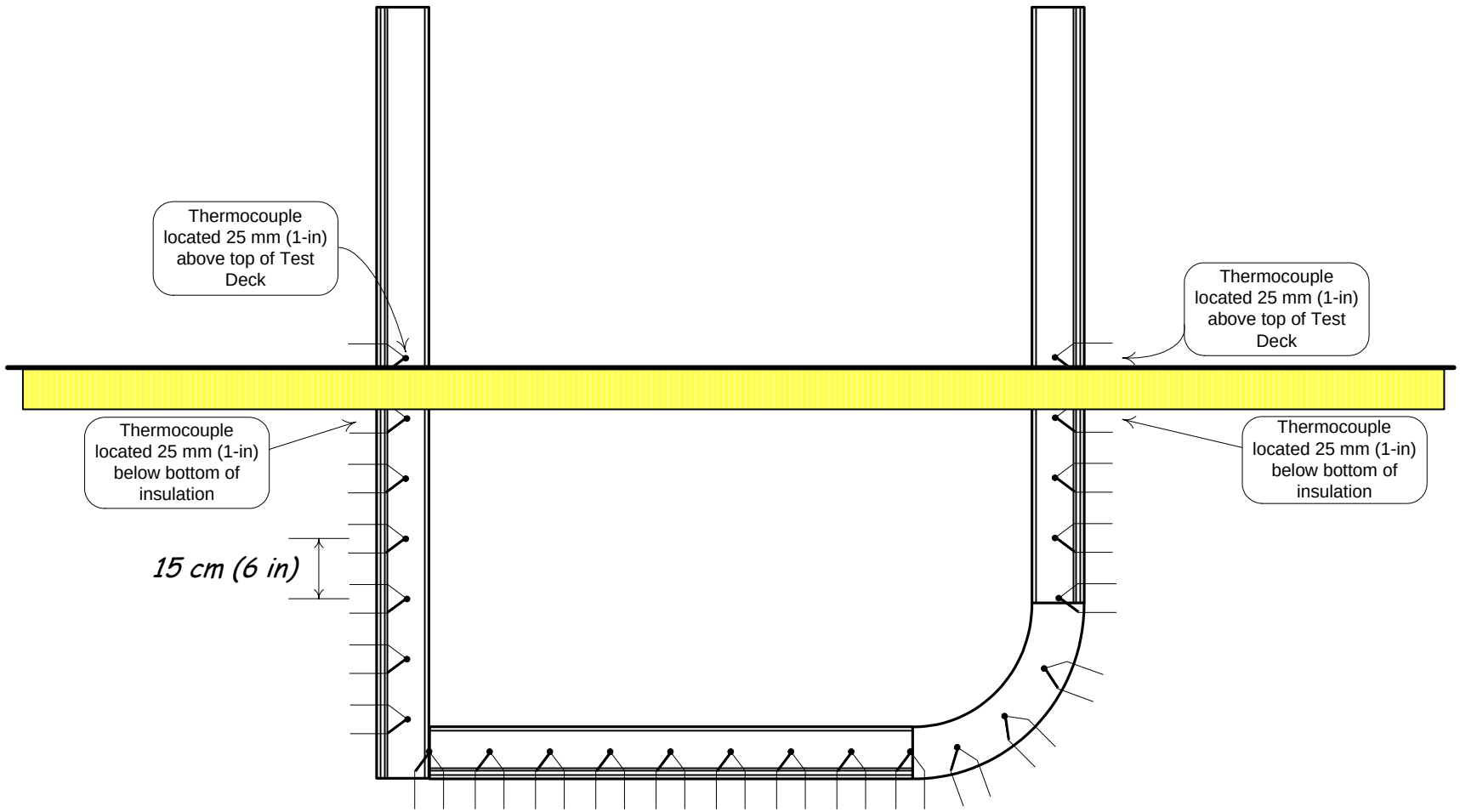

Figure A14: Thermocouple placement on 914-mm (36-in) cable tray test specimens (side view only, additional thermocouples to be attached at 150-mm [6-in] spacing intervals on other side rail and to a bare #8 copper wire routed along the mid-axis of the tray on the bottom of the rungs).

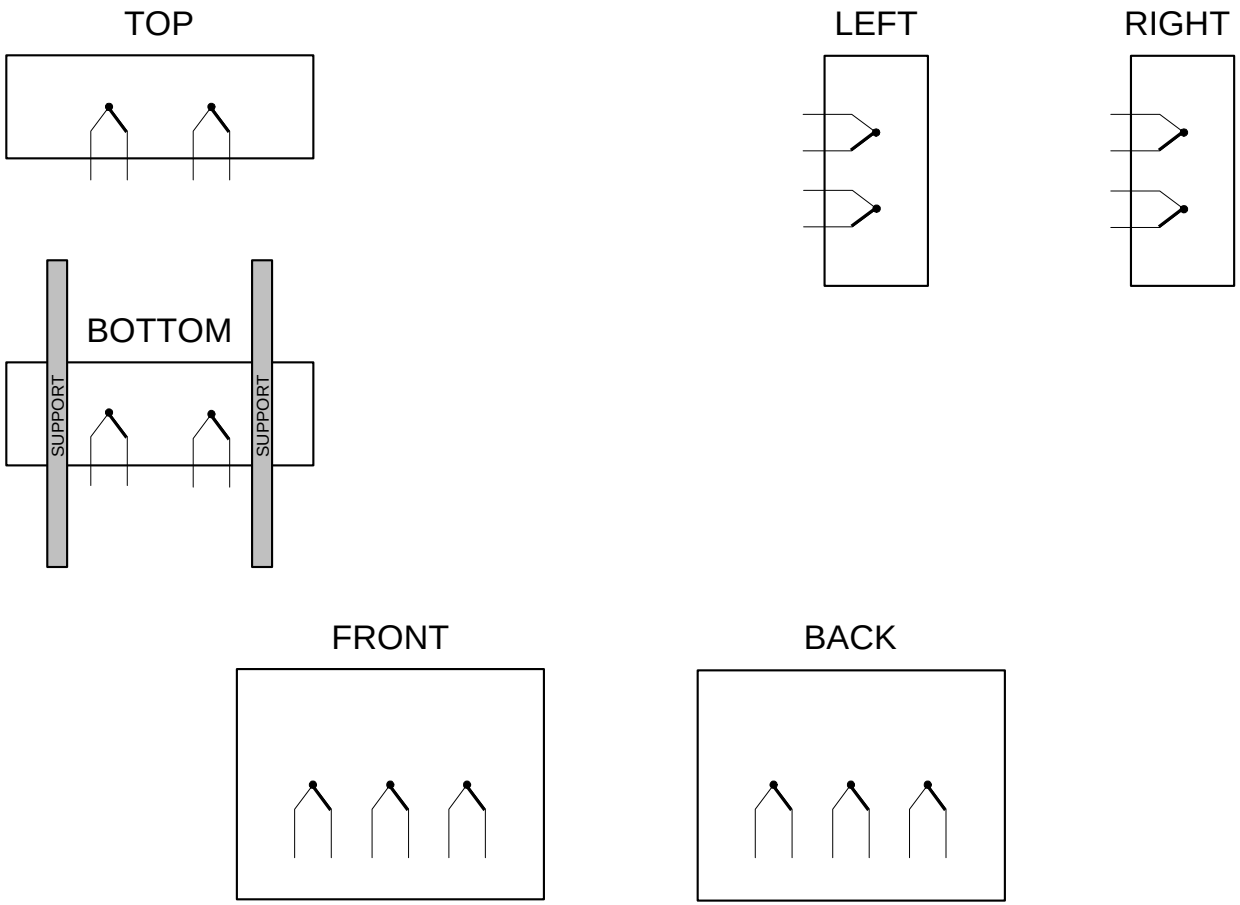

Figure A15: Thermocouple placement on junction box test specimen surfaces (no bare #8 copper conductor wire will be located inside the box and no thermocouples will be used to monitor the status of the junction box supports).

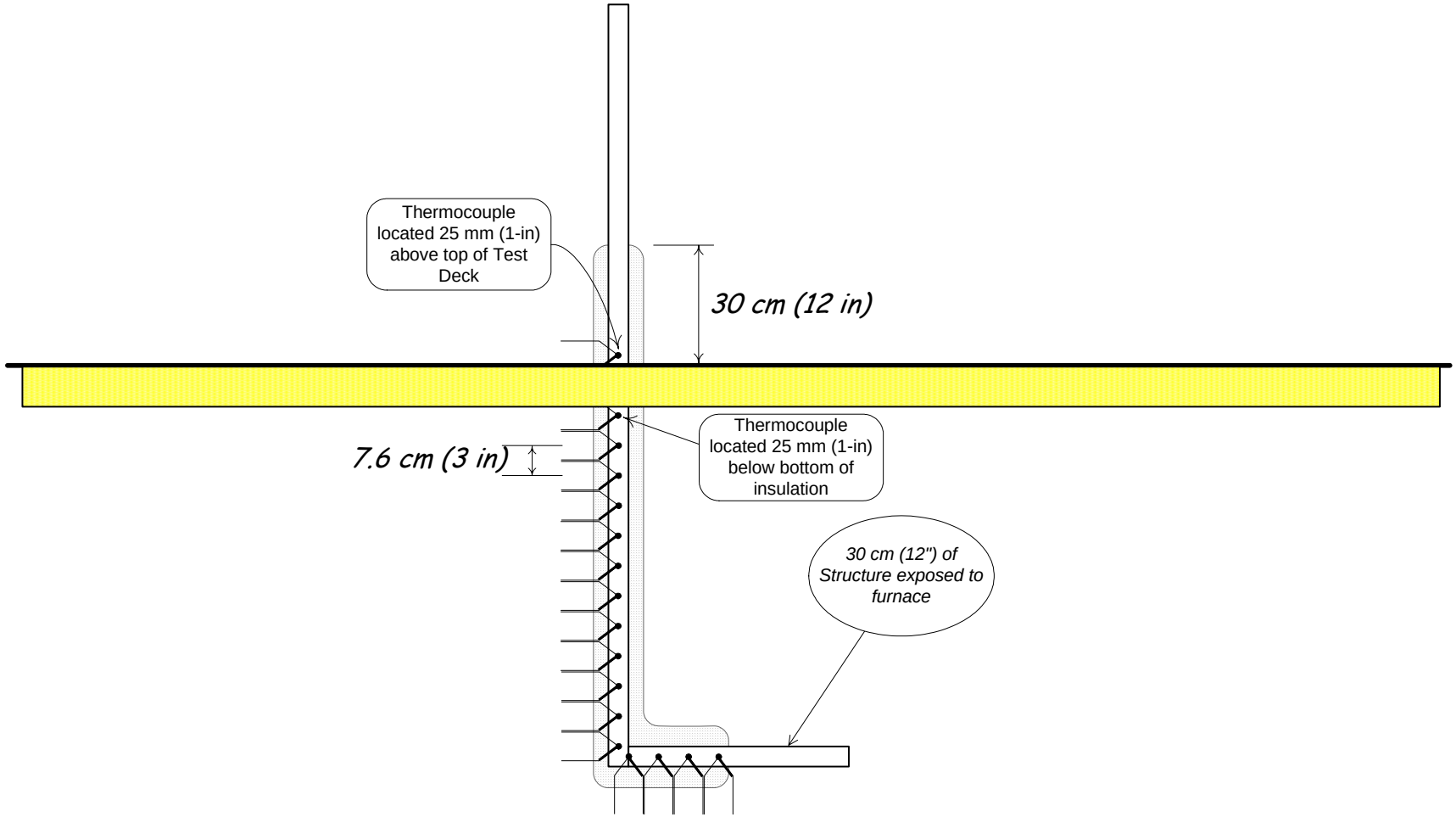

Figure A16: Thermocouple placement on tube steel support structure test specimens. (Note: ERFBS silhouette shown for reference only.)

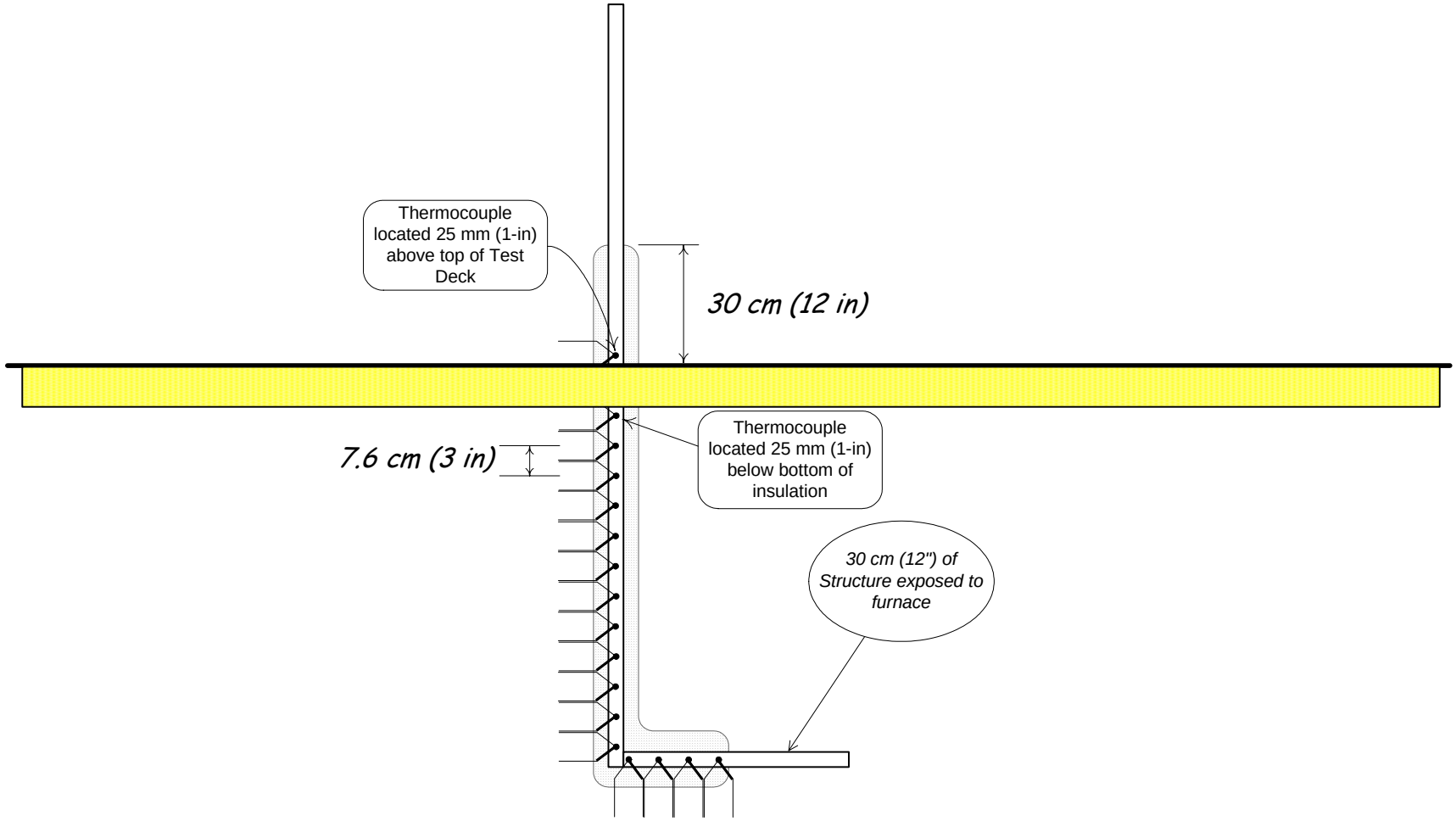

Figure A17: Thermocouple placement on Unistrut® channel support structure test specimens. (Note: ERFBS silhouette shown for reference only.)

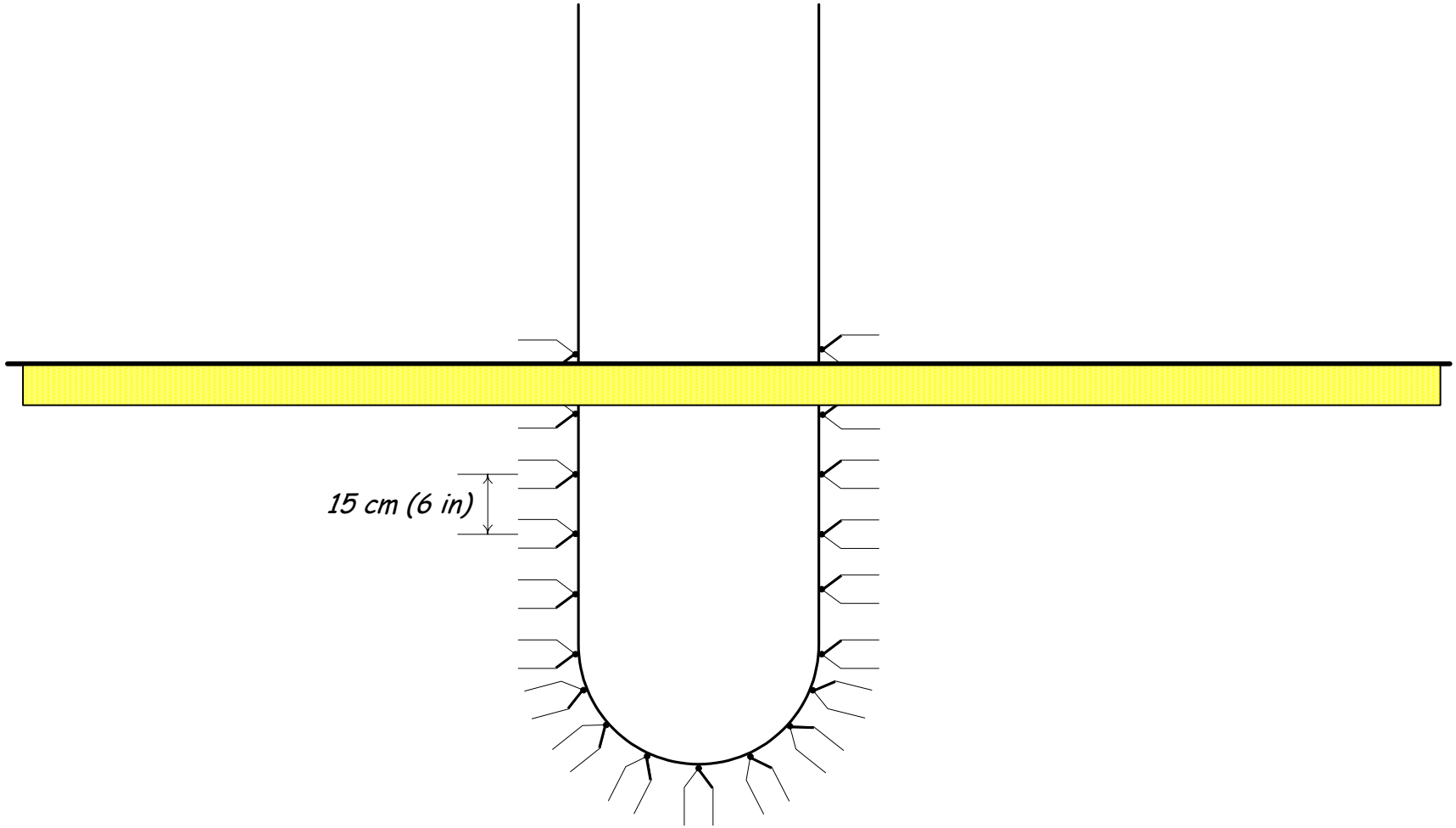

Figure A18: Thermocouple placement on unsupported cable drop test specimens.

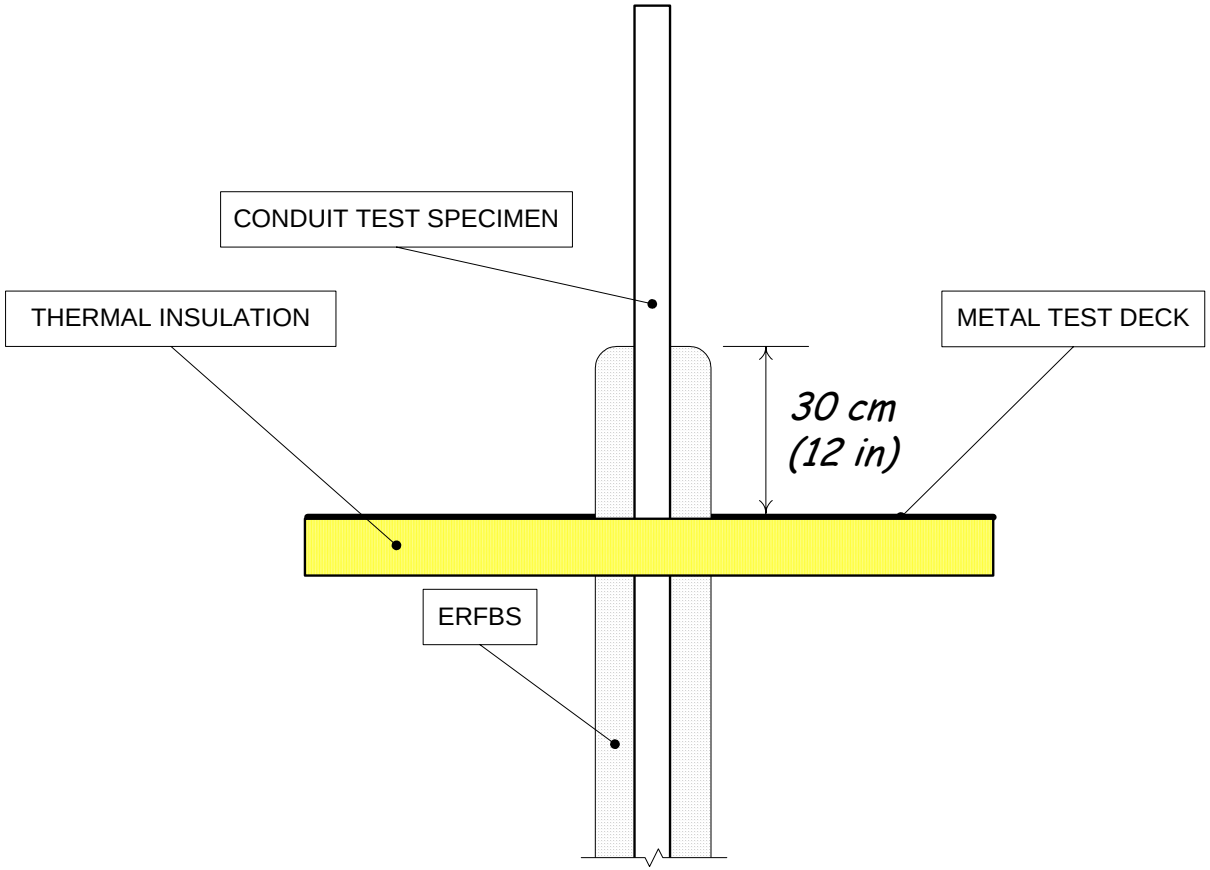

Figure A19: Detail of conduit test specimen direct attachment ERFBS extension through the test deck.

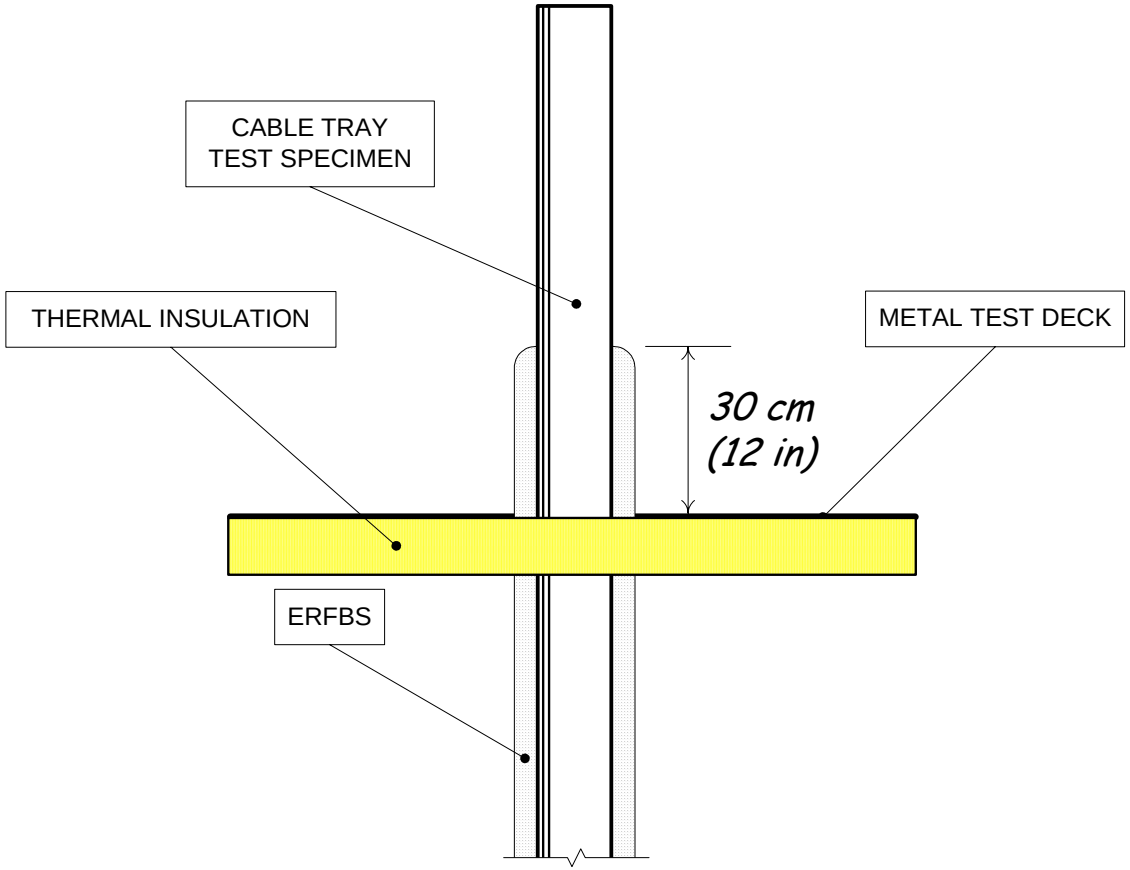

Figure A20: Detail of cable tray test specimen direct attachment ERFBS extension through the test deck.

B Email Correspondence from NEI to NRC Regarding Predominant Industry Practices for Hemyc

The message below is the body of an email from Fred Emerson, NEI, to Mark Salley, NRC, dated January 18, 2005, with subject heading, “Hemyc – Predominant Industry Practices.”

Mark and Roy -

As requested, here are the answers to your questions.

Thanks,

Fred Emerson
202-739-8086

<<<<<<<<<<<<<<<<<<<<<<<<<<<<<<<<<<<<<<<<>>>>>>>>>>>>>>>>>>>>>>>>>>>>>>>>
>>>>>>>>>>>>>>>>>

1. Fiberglass cloth inner cover. Which is the predominate industry practice ~ To use the fiberglass cloth on the non-fire side of the barrier, or to just use the siltemp material on both sides? Was there any difference between the conduit & cable trays (as to how it was done)

Answer: The predominant industry practice is to use siltemp for both the internal and external fabric. In some cases the fiberglass cloth was used on the internal side (facing the protected component) and in these cases the external fabric was overlapped a minimum of 6" onto the non-fire side.

2. Attachments The testing used finger straps. Most of the photos we have seen use banding. Which method was prevalent in industry? Again, any difference between conduit vs. cable tray vs. junction boxes (e.g., bands are prevalent on conduits, while finger straps were used on cable trays)

Answer: The predominant industry practice is to use stainless steel banding. This applies to cable trays, conduits and boxes.

3. Air drops What is predominate ~ the use of air gap spacers between the cable & fire barrier, or direct attachment around the air drop?

Answer: The predominant method is to install the Hemyc wrap with gap spacers to ensure that a "dead air space" is maintained between the unexposed side of the wrap and the protected cable surface.

4. Density of material The spec calls out 6 - 8 lb density. Did any licensee have any QA requirements to measure this? Is there any record of what density of material the licensee installed?

Answer: The material was specified to be 6 to 8 lb density as manufactured by Johns-Manville, Babcock & Wilcox or wrap vendor approved equal. This material was then installed to the specified thickness. No site verification of density was required nor necessary as the material used (density range) was consistent to that specified in the fire qualification tests. These materials were considered approved off-the-shelf items and required a certificate of compliance/conformance.

5. Joint Technique There are a number of different joint techniques, from butt joints, to overlapping the joint a minimum of 2 inches, to but joints with a 6 in. collar. Which method is predominate on conduits?
cable trays?

Answer: The industry is essentially evenly split between using an overlapping joint method and the butt joint with a collar method for conduits. Typically trays use the overlapping joint method with an overlapping joint of 2 inches.

Appendix B

CONSTRUCTION DRAWINGS

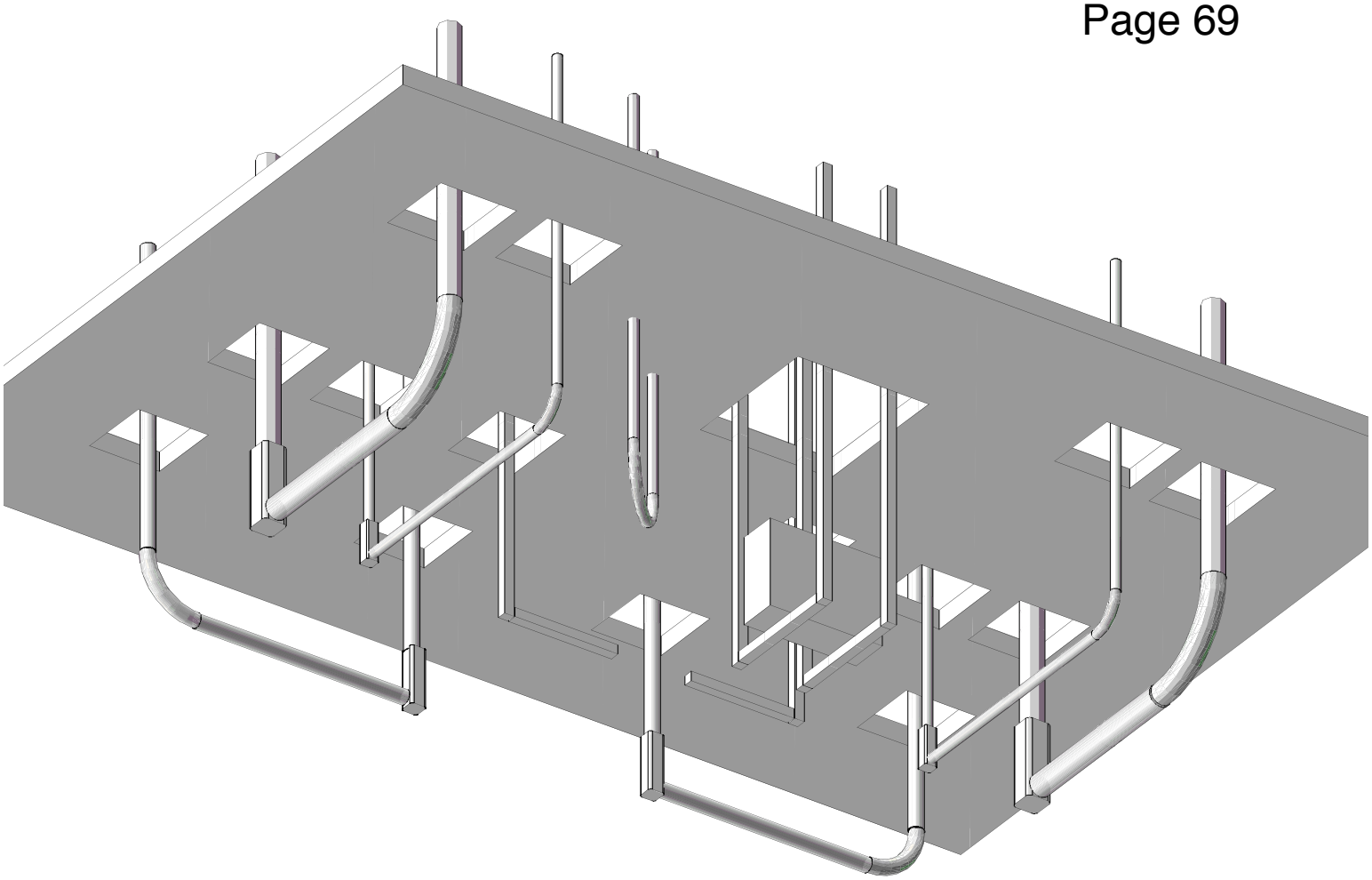

3D ISOMETRIC VIEW FROM BELOW

Note:
This view shows the separation and placement of all raceways in Test #3. Support members on the unexposed side of the deck are not shown.

OMEGA POINT LABORATORIES, INC. Project No. 14790-123265	
SANDIA NATIONAL LABORATORIES	
Fig. 1, Rev.1 Test 3 Assembly Isometric View	
Drwn by:D.N.Priest OPL App'l: C Humphrey Sandia App'l:	Date: 1/5/05 Date: 1/5/05 Date:

Scale=1:35

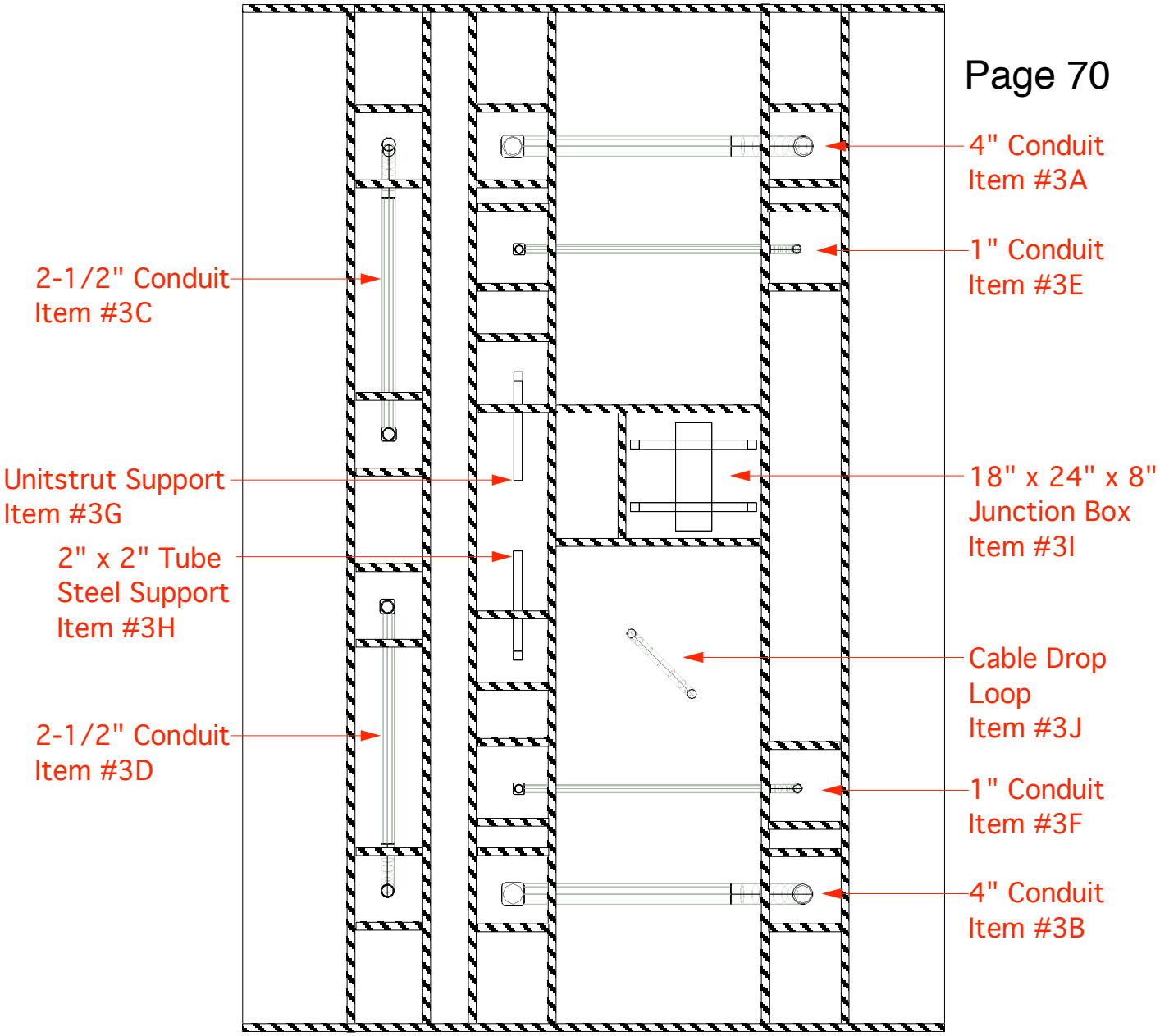

PLAN VIEW

Note:
All raceway items have been placed in the furnace in symmetric locations, to give as uniform exposure as possible between two of the same items. In this drawing, the structural channel above the deck steel is shown cross-hatched, and the deck steel and 4" channel below it are transparent, to indicate the placement of the raceways. See Fig. 10 for deck and opening dimensions.

OMEGA POINT LABORATORIES, INC. Project No. 14790-123265	
SANDIA NATIONAL LABORATORIES	
Fig. 2, Rev. 1 Test 3 Assembly Raceway Layout	
Drwn by:D.N.Priest OPL App'l: C Humphrey Sandia App'l:	Date: 1/25/05 Date: 1/25/05 Date:

Scale=1:35

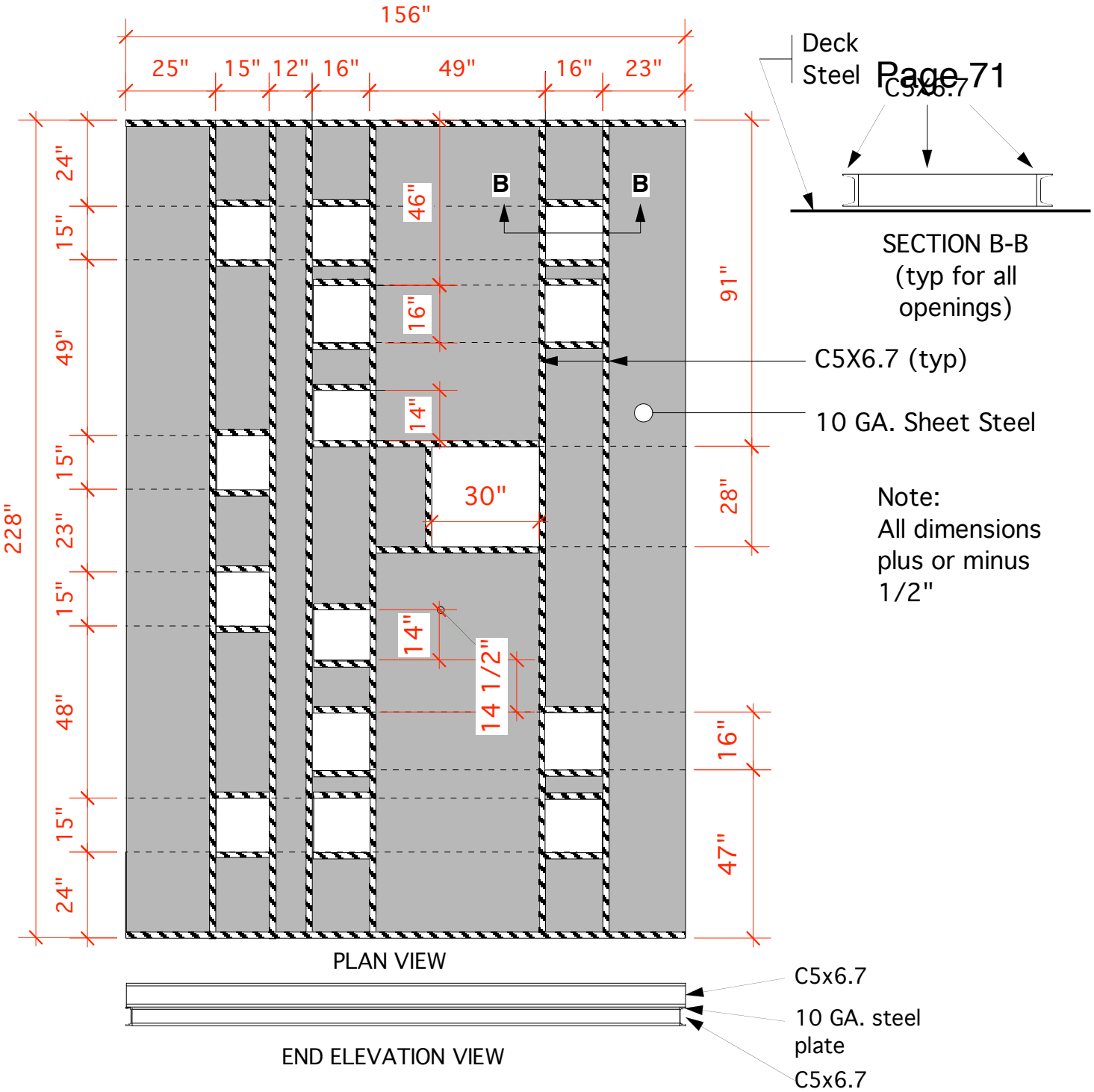

Note:
The lower perimeter steel consisted of C5x6.7 channel, positioned with flanges outwards, completely around the deck. Over the channel was placed a continuously-welded layer of 10 GA. hot-rolled steel plate. Over the steel plate was placed C5x6.7 channel, mounted with the flanges outwards from the shorter ends, and with flanges away from the interior of each opening (indicated by cross-hatching).

OMEGA POINT LABORATORIES, INC. Project No. 14790-123265	
SANDIA NATIONAL LABORATORIES	
Fig. 3, Rev. 1 Test 3 Assembly Deck Construction Details	
Drwn by:D.N.Priest OPL App'l: C Humphrey Sandia App'l:	Date: 1/4/05 Date: 1/4/05 Date:

Scale=1:35

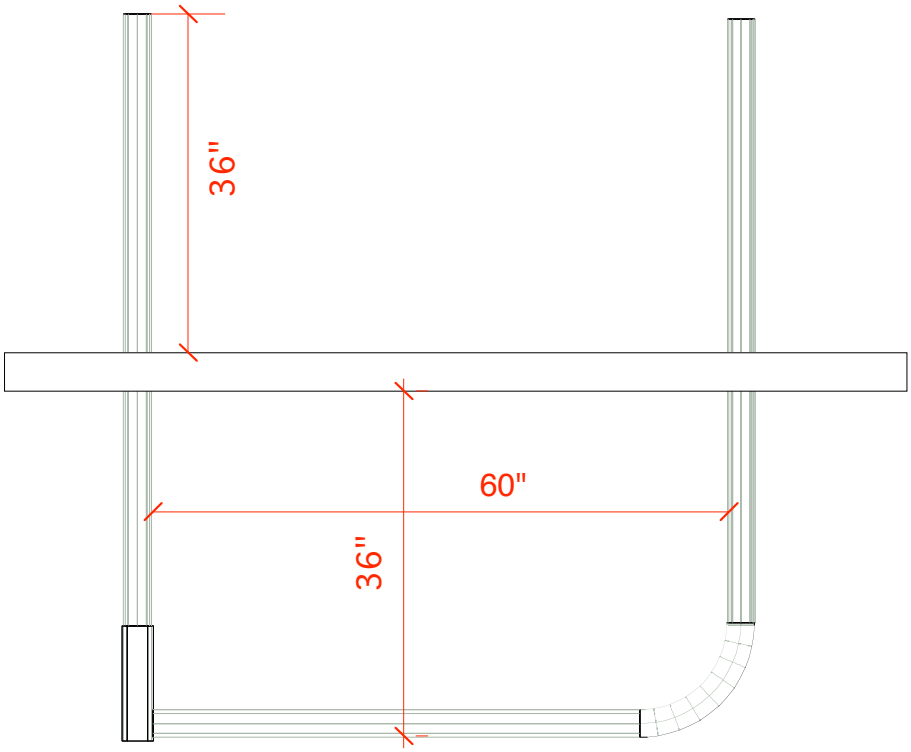

SIDE ELEVATION VIEW

Note:
This view shows the dimensions of each conduit system, regardless of diameter.

OMEGA POINT LABORATORIES, INC. Project No. 14790-123265	
SANDIA NATIONAL LABORATORIES	
Fig. 5 Test 3 Assembly Isometric View	
Drwn by:D.N.Priest OPL App'l: C Humphrey Sandia App'l:	Date: 1/5/05 Date: 1/5/05 Date:

Scale=1:30

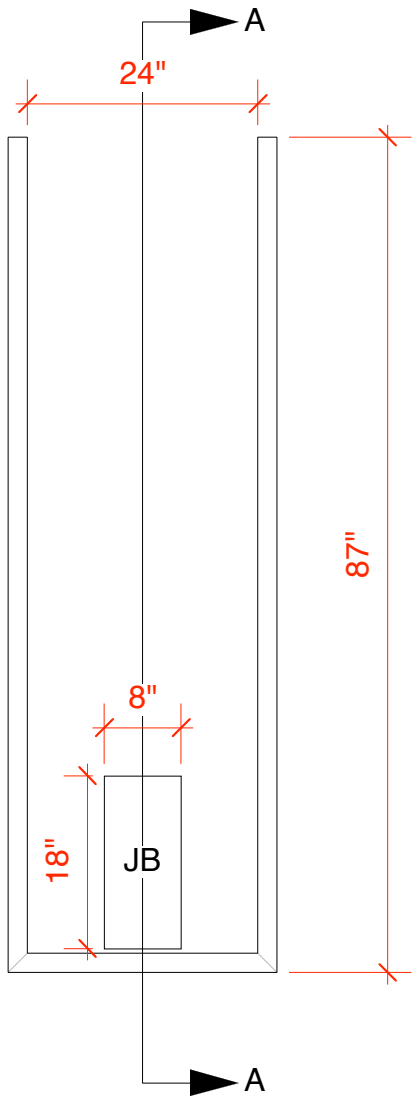

SIDE VIEW

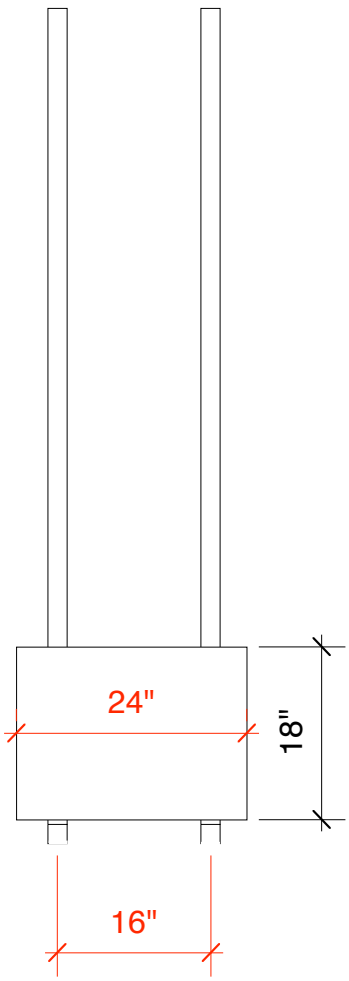

SECTION A-A

Note:
The Unistrut (and 2"x2" tubing) supports for the junction box were constructed to the dimensions indicated. The bottom of the junction box was located 45" below the under side of the insulated deck.

OMEGA POINT LABORATORIES, INC. Project No. 14790-123265	
SANDIA NATIONAL LABORATORIES	
Fig. 5 Test 3 Assembly Junction Box Supports	
Drwn by:D.N.Priest	Date: 1/25/05
OPL App'l: C Humphrey	te: 1/25/05
Sandia App'l:	Date:

Scale=1:20

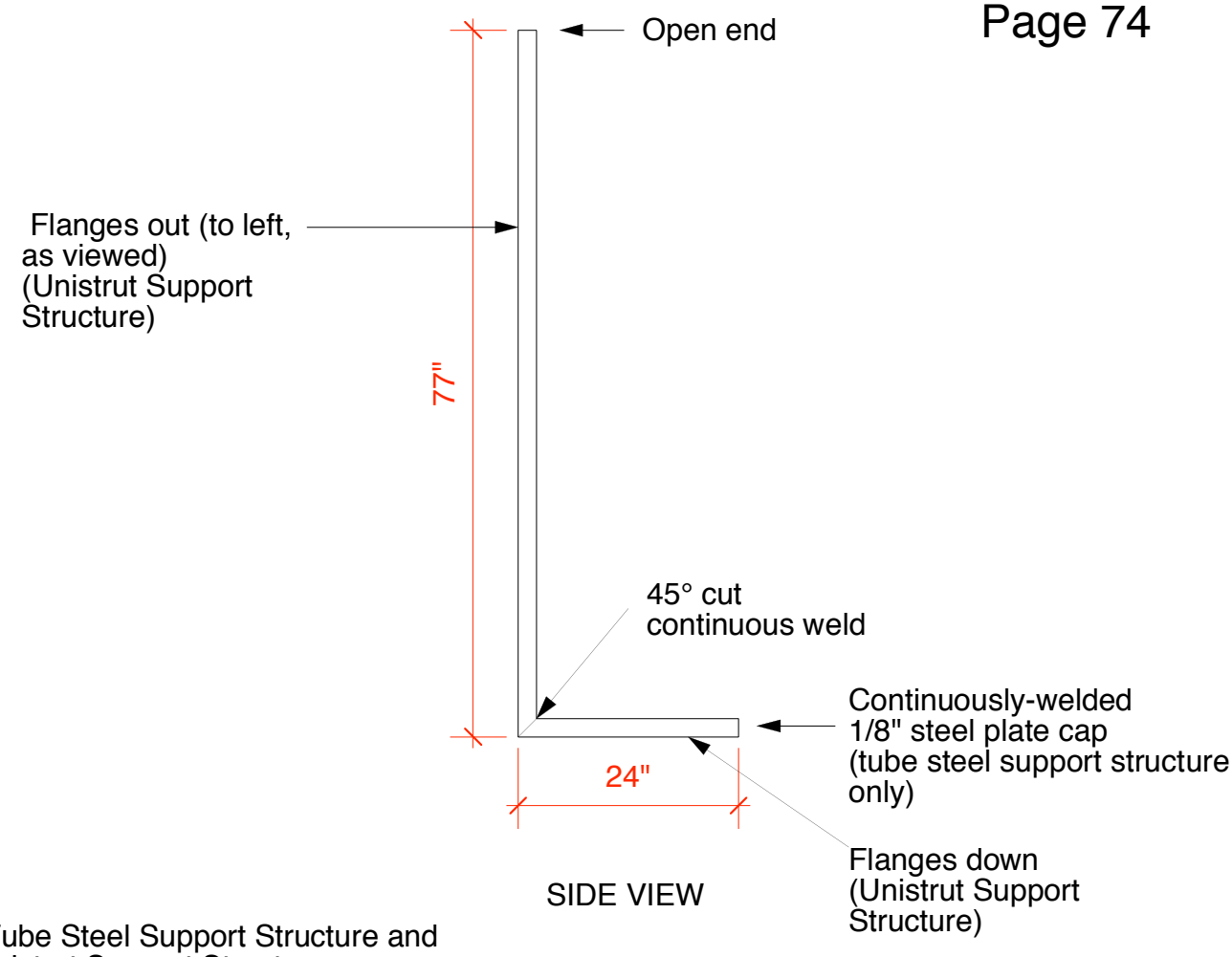

Note:
The Tube Steel Support Structure and the Unistrut Support Structure were both constucted as shown.

Note:
The Unistrut (and 2"x2" tubing) support structure test specimens were constructed to the dimensions indicated. The bottom of the specimen was located 36" below the under side of the insulated deck.

OMEGA POINT LABORATORIES, INC. Project No. 14790-123265	
SANDIA NATIONAL LABORATORIES	
Fig. 6 Test 3 Assembly Steel & Unistrut Support Structures	
Drwn by:D.N.Priest	Date: 1/27/05
OPL App'l: C Humphrey	Date: 1/27/05
Sandia App'l:	Date:

Scale=1:20

Appendix C

THERMOCOUPLE LOCATIONS

THERMOCOUPLE LOCATION DRAWINGS

Test #3 – M.T., Direct Attachment

4/4/05

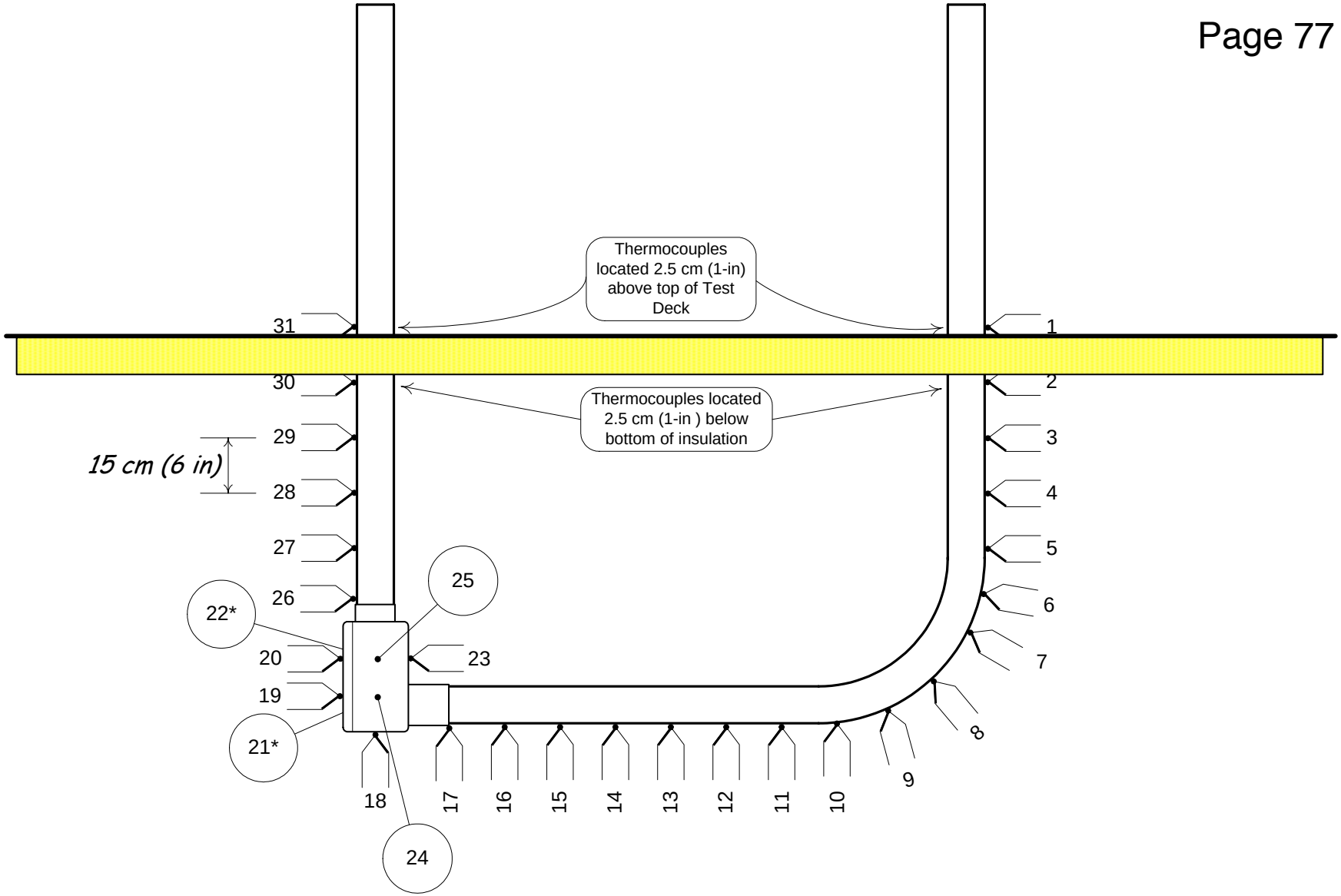

* Located on back of conduit body

Test Specimen 3A – Empty 103-mm (4-inch) conduit thermocouple locations and tag numbers.

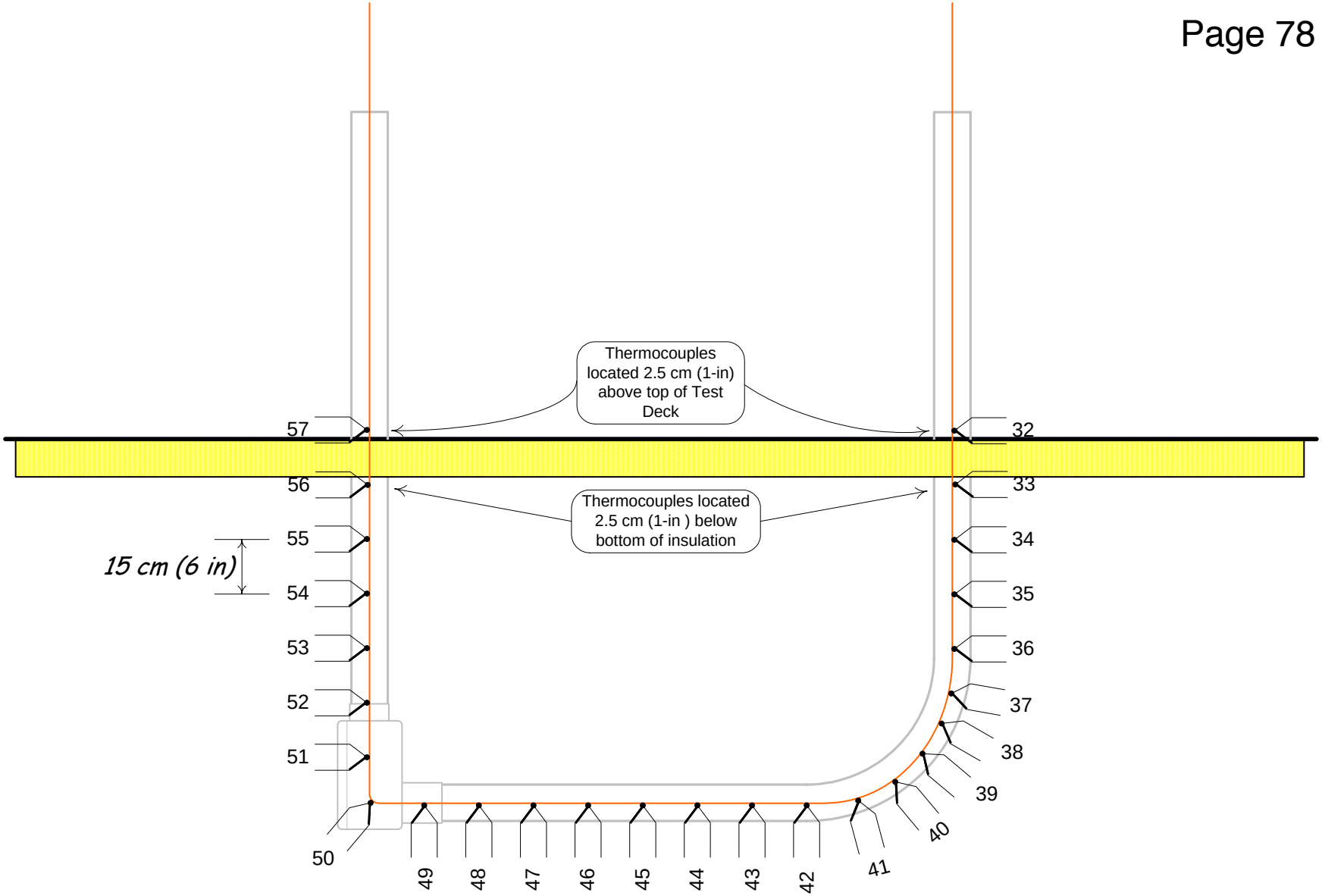

Test Specimen 3A – Empty 103-mm (4-inch) conduit thermocouple locations and tag numbers on bare #8 copper wire. Note: Some uncertainty in exact thermocouple locations exists.

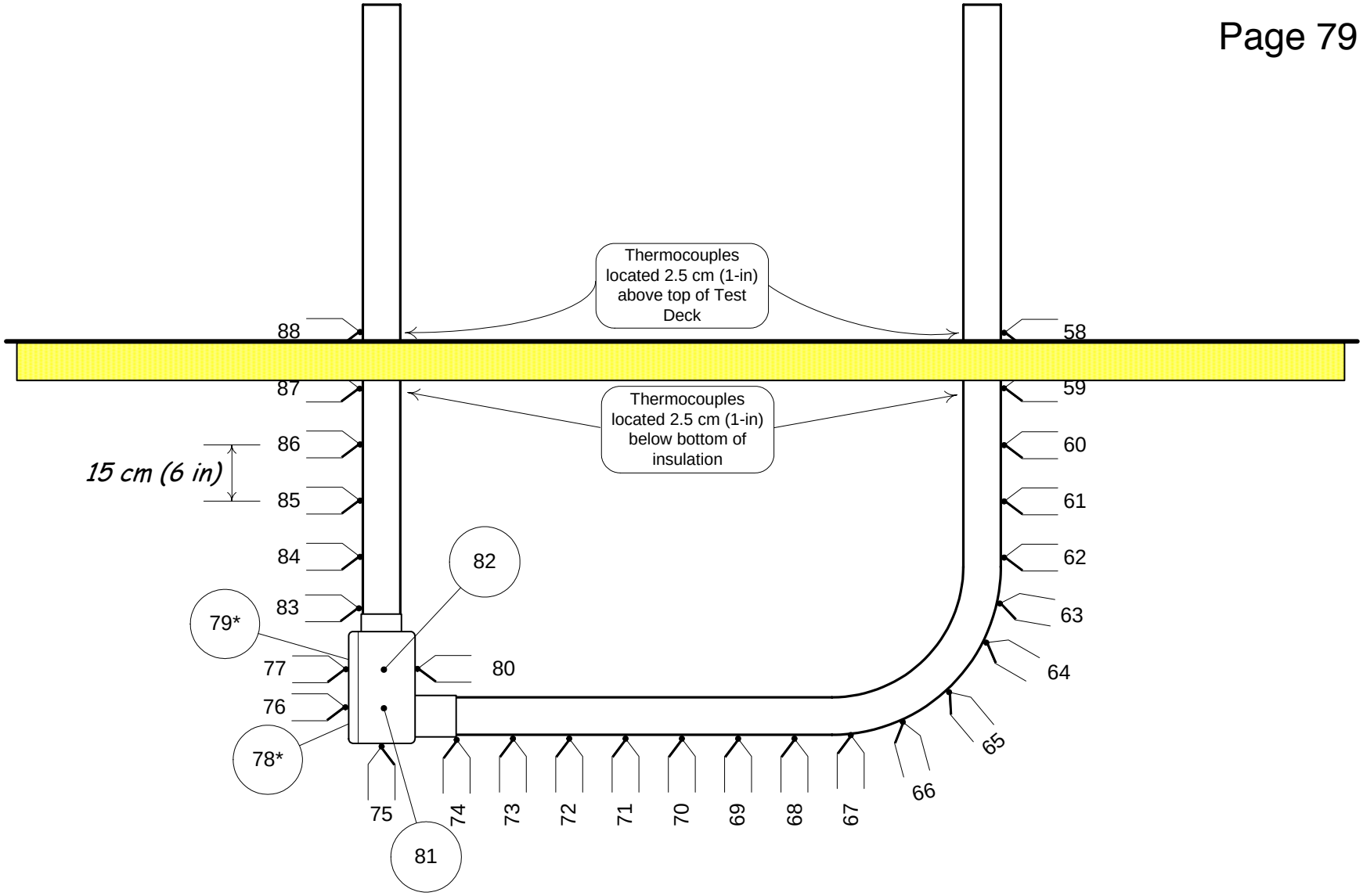

* Located on back of conduit body

Test Specimen 3B – “Loaded” 103-mm (4-inch) conduit thermocouple locations and tag numbers.

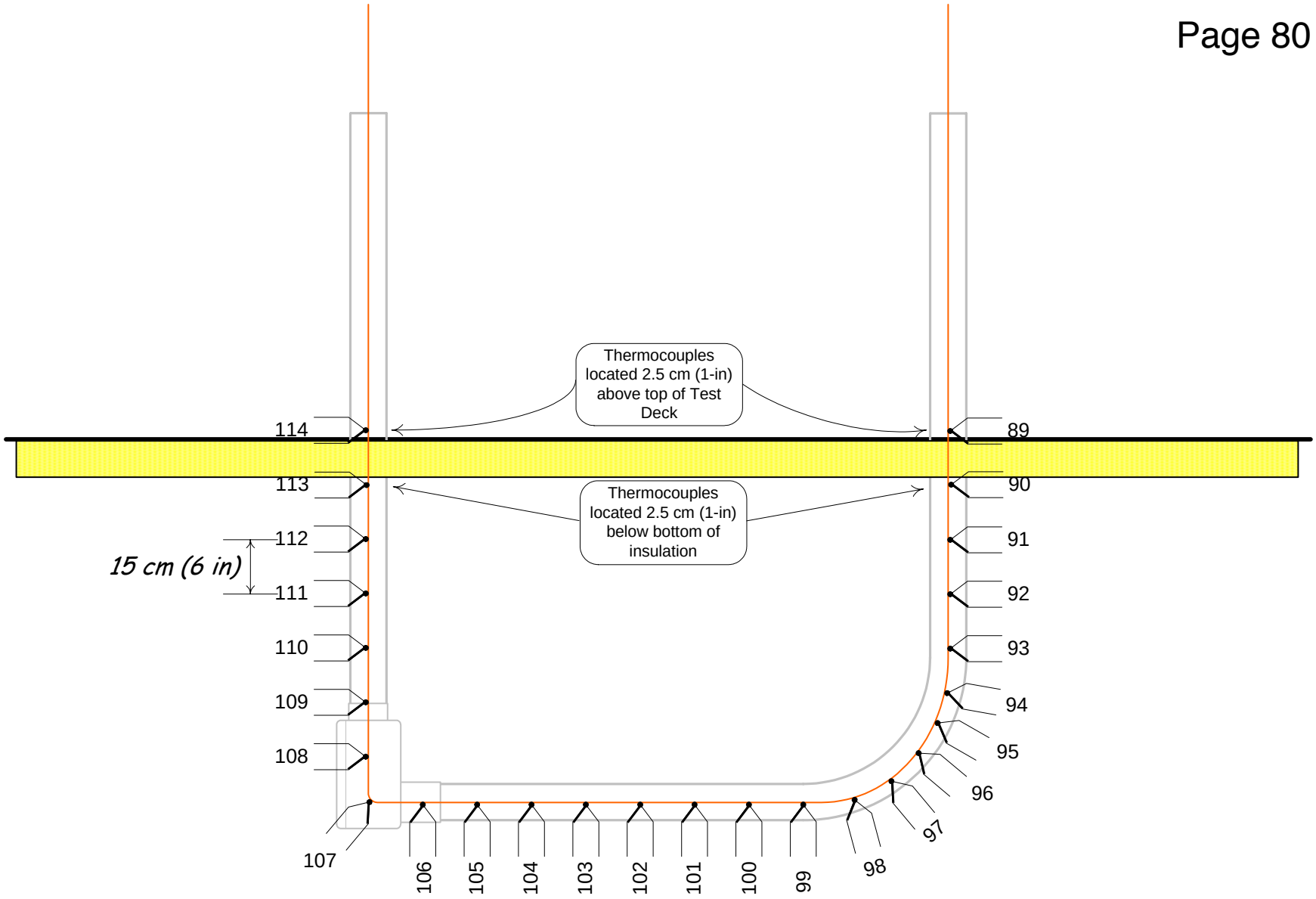

Test Specimen 3B – “Loaded” 103-mm (4-inch) conduit thermocouple locations and tag numbers on bare #8 copper wire. Note: Some uncertainty in exact thermocouple locations exists.

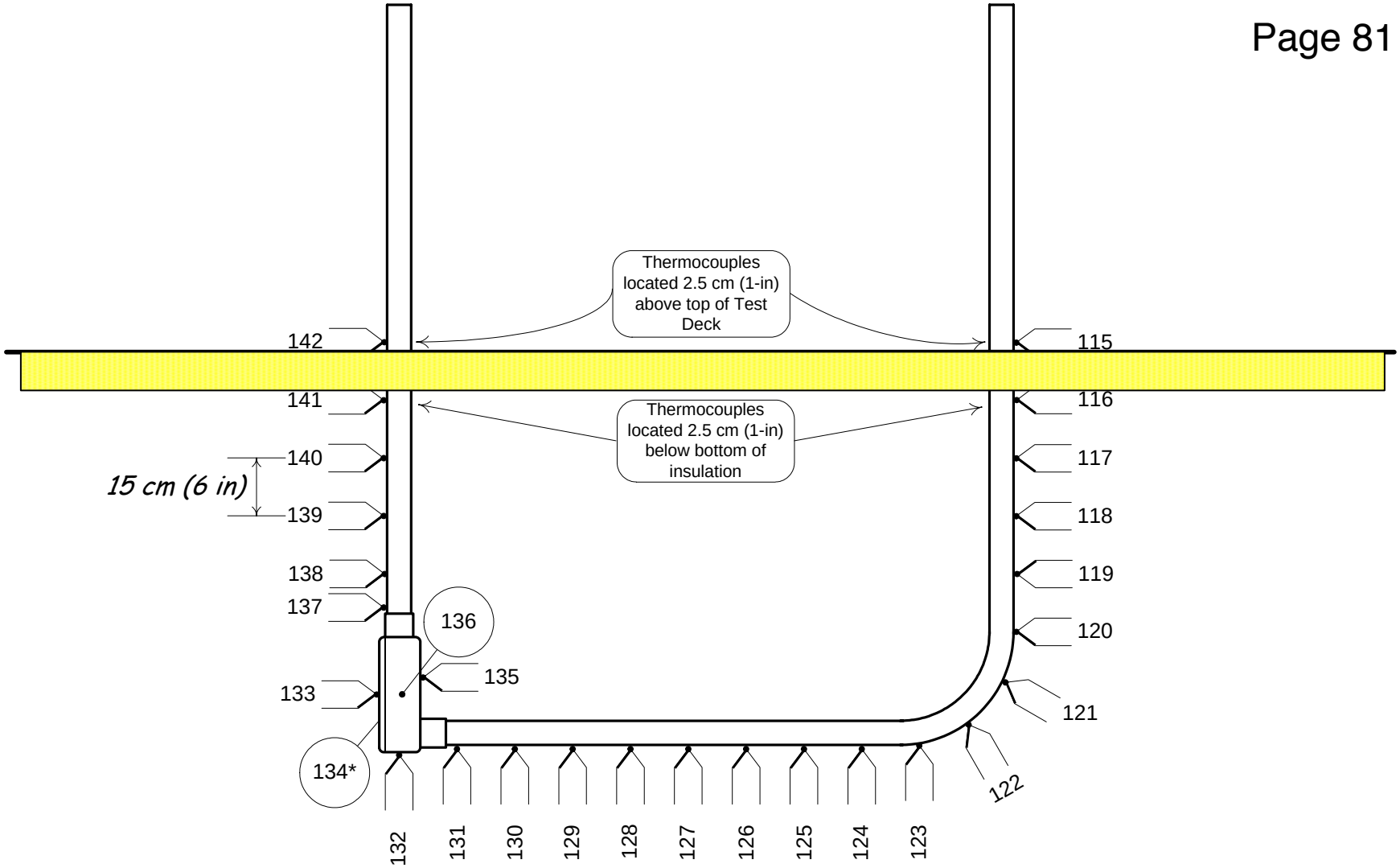

* Located on back of conduit body

Test Specimen 3C – Empty 63-mm (2½-inch) conduit thermocouple locations and tag numbers.

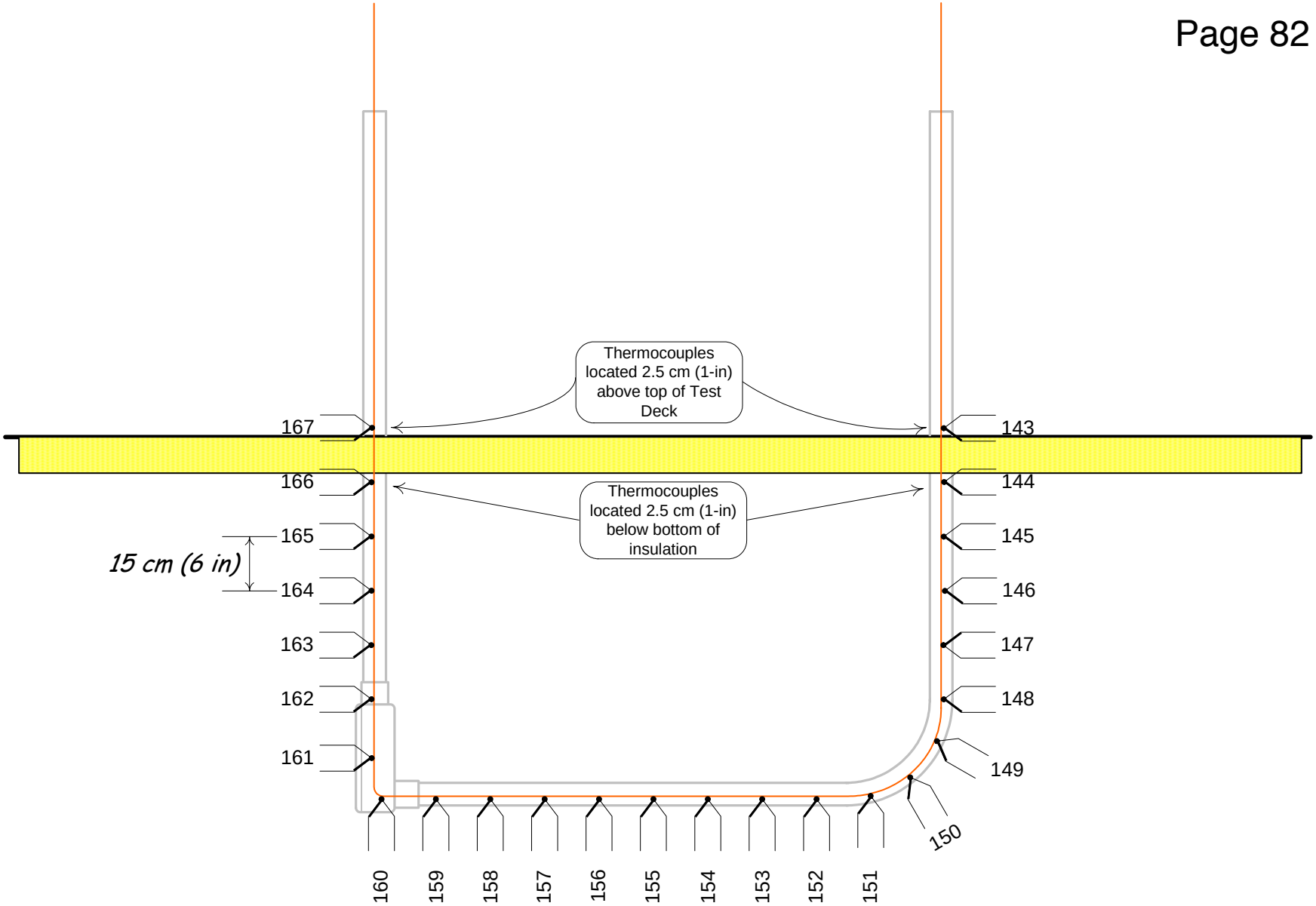

Test Specimen 3C – Empty 63-mm (2½-inch) conduit thermocouple locations and tag numbers on bare #8 copper wire. Note: Some uncertainty in exact thermocouple locations exists.

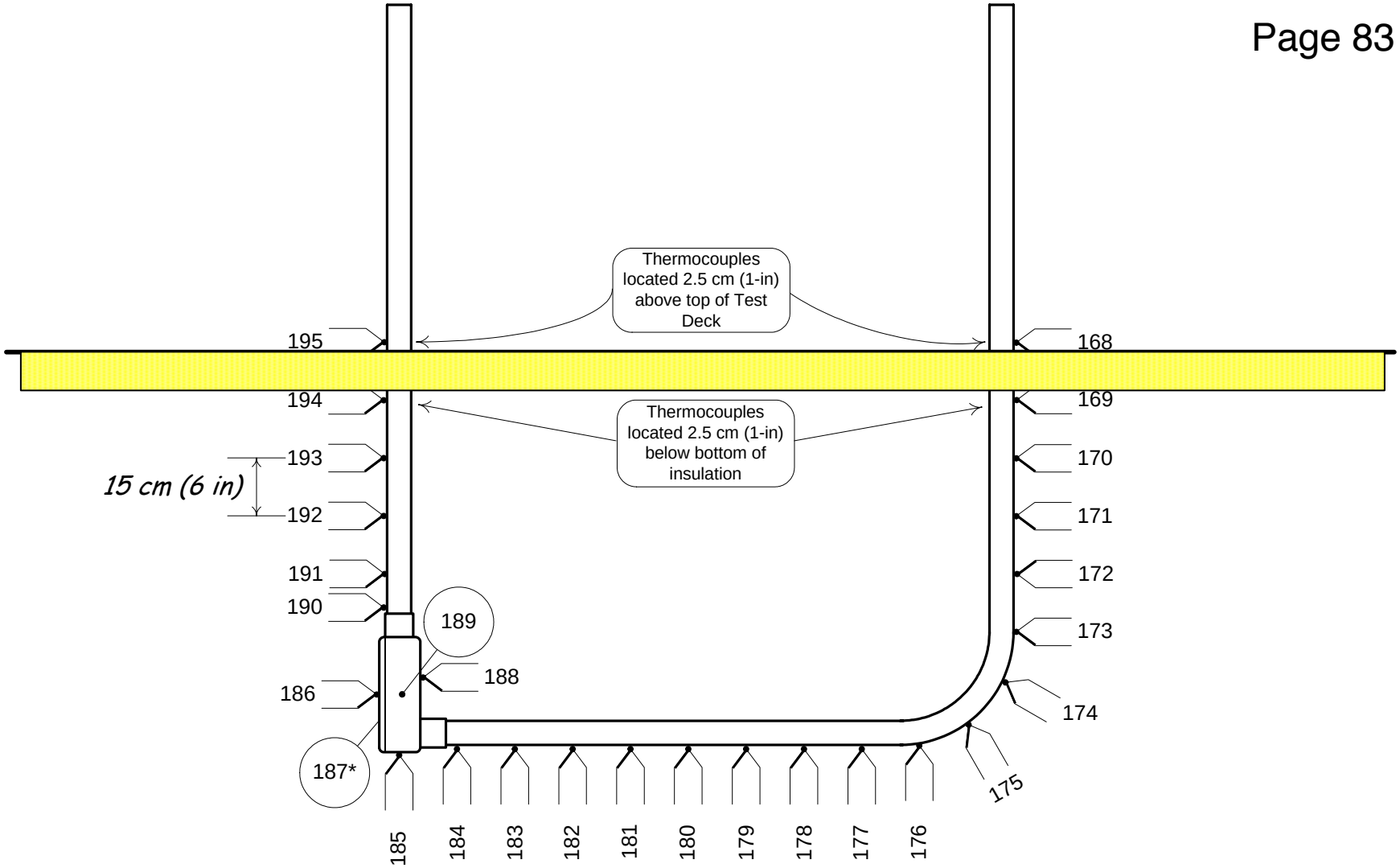

* Located on back of conduit body

Test Specimen 3D – “Loaded” 63-mm (2½-inch) conduit thermocouple locations and tag numbers.

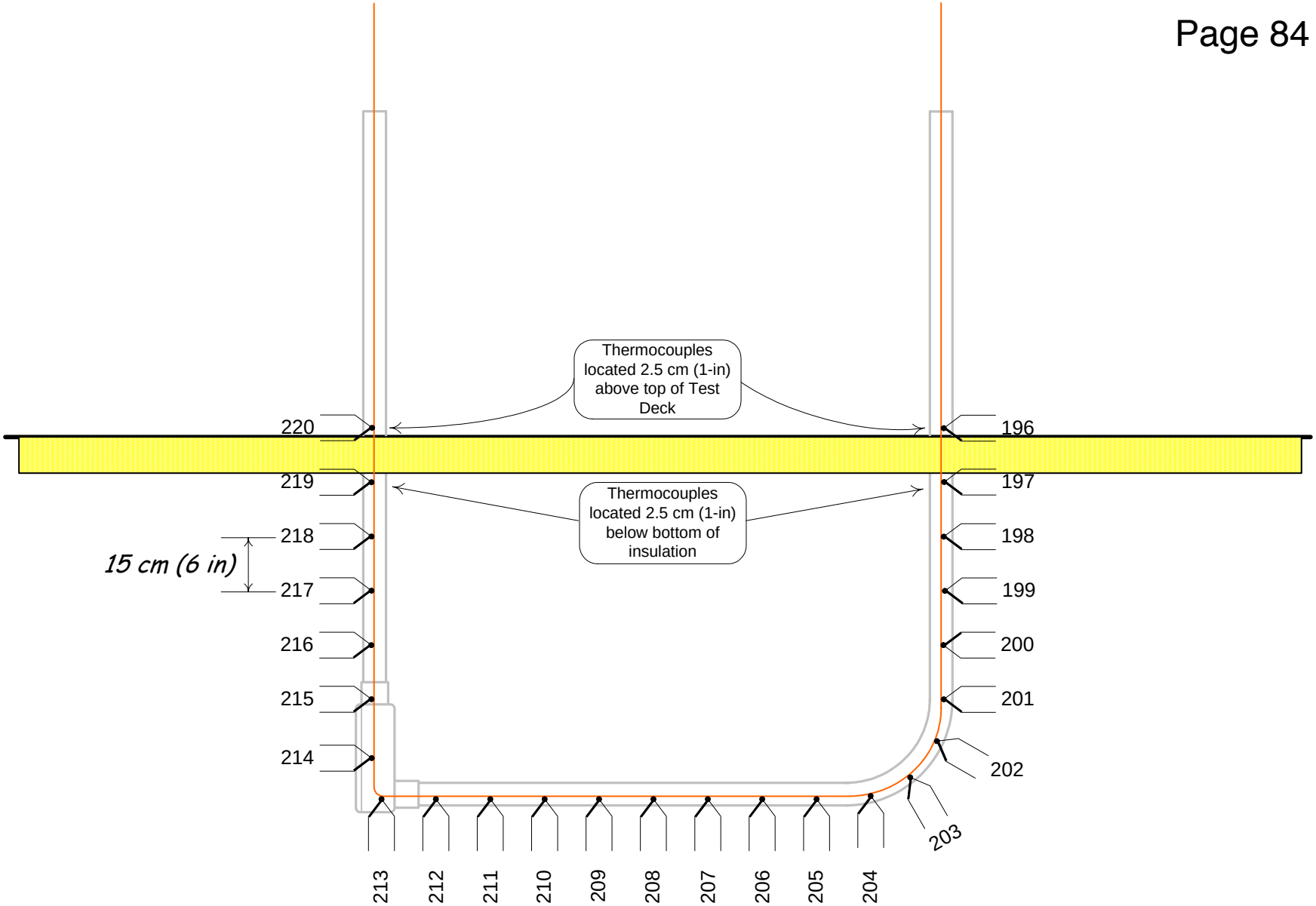

Test Specimen 3D – “Loaded” 63-mm (2½-inch) conduit thermocouple locations and tag numbers on bare #8 copper wire. Note: Some uncertainty in exact thermocouple locations exists.

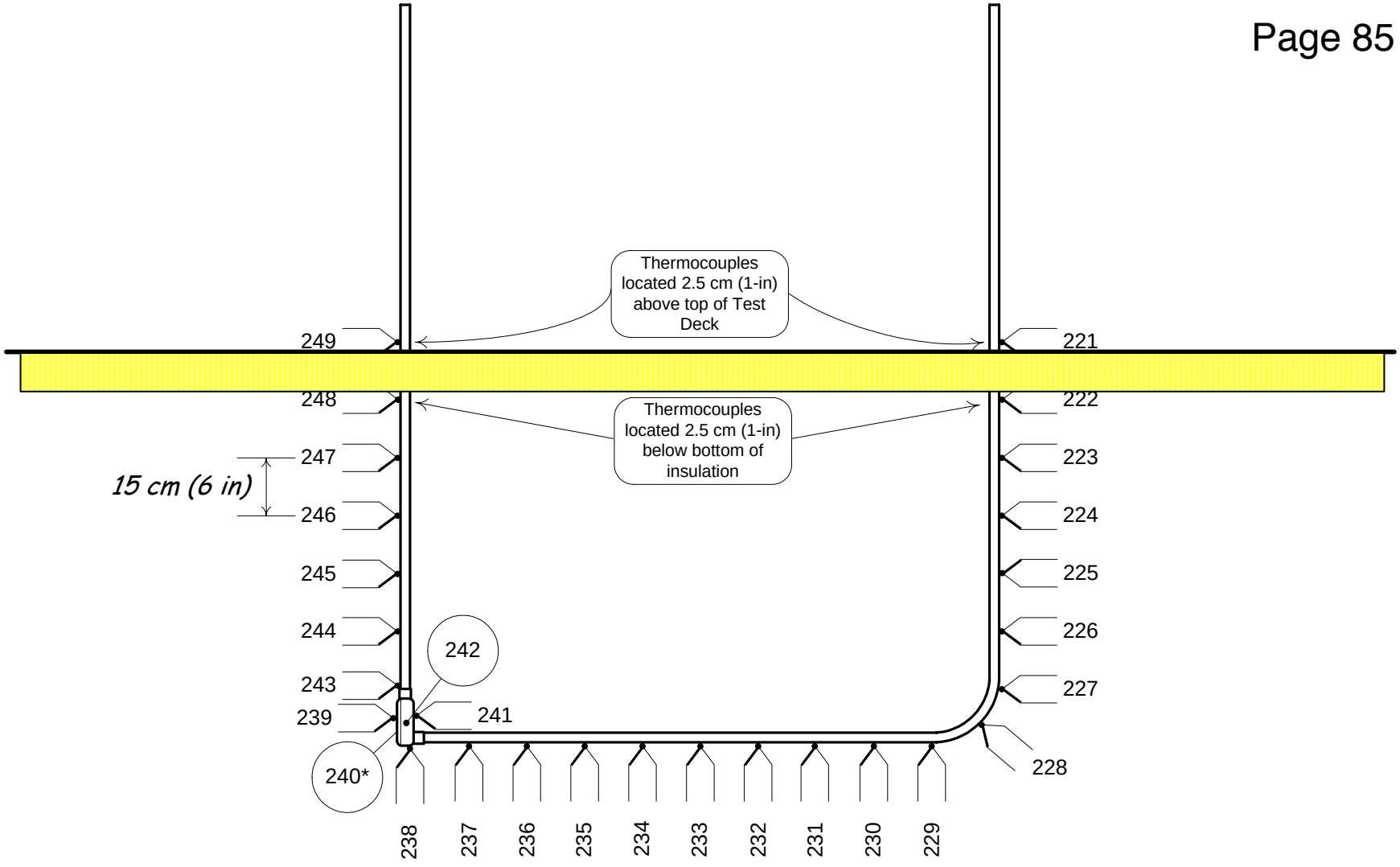

* Located on back of conduit body

Test Specimen 3E – Empty 27-mm (1-inch) conduit thermocouple locations and tag numbers.

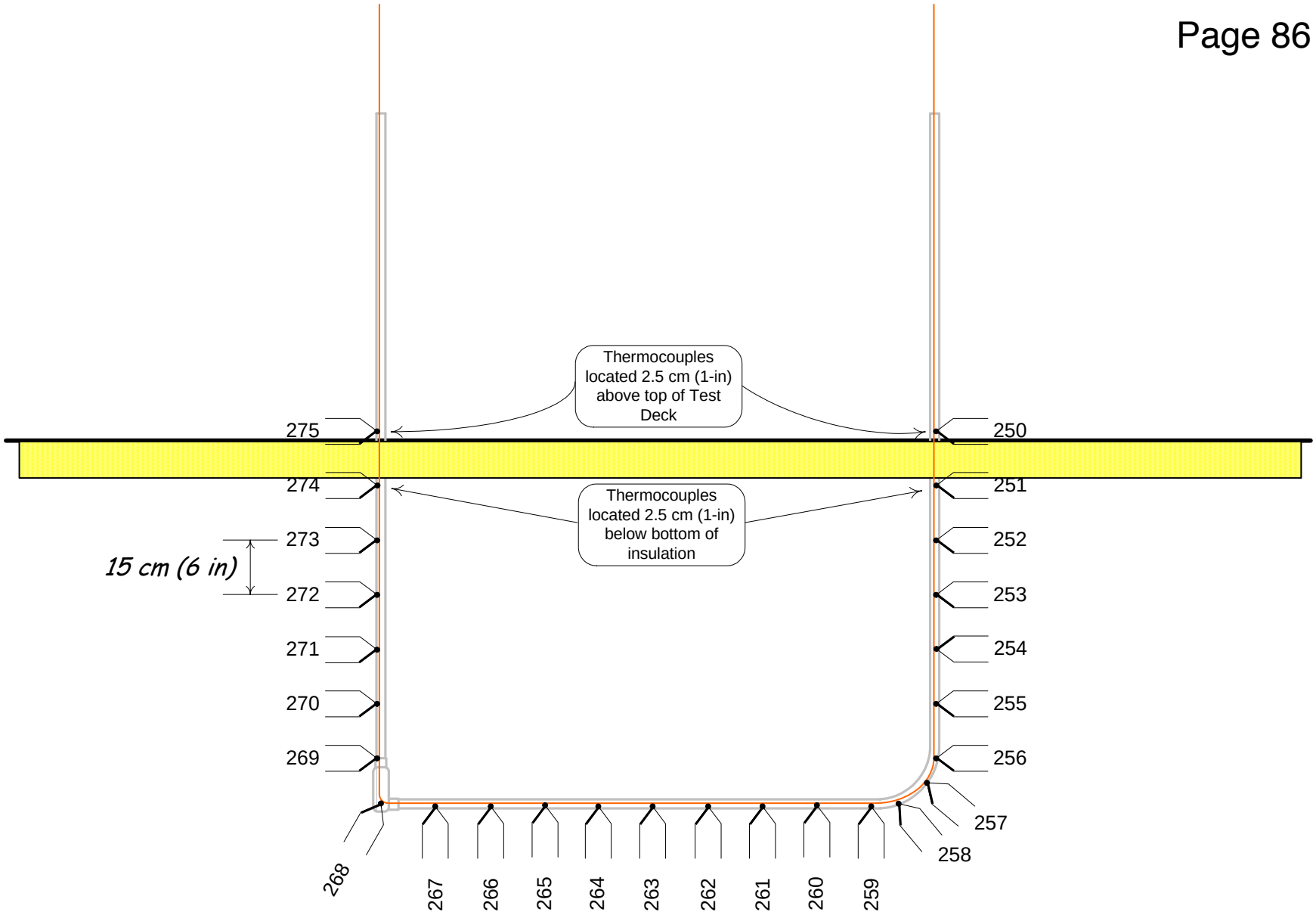

Test Specimen 3E – Empty 27-mm (1-inch) conduit thermocouple locations and tag numbers on bare #8 copper wire. Note: Some uncertainty in exact thermocouple locations exists.

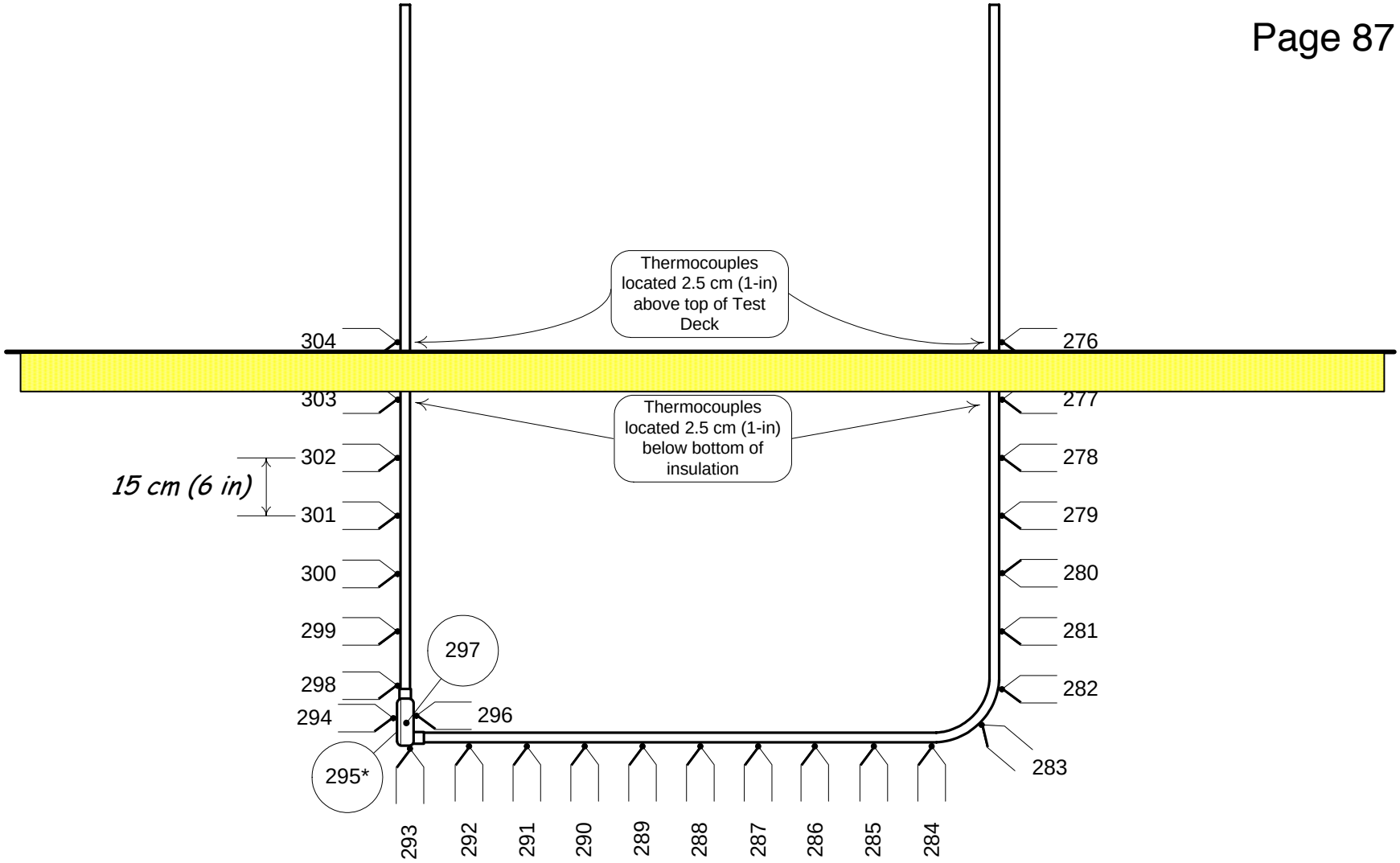

* Located on back of conduit body

Test Specimen 3F – “Loaded” 27-mm (1-inch) conduit thermocouple locations and tag numbers.

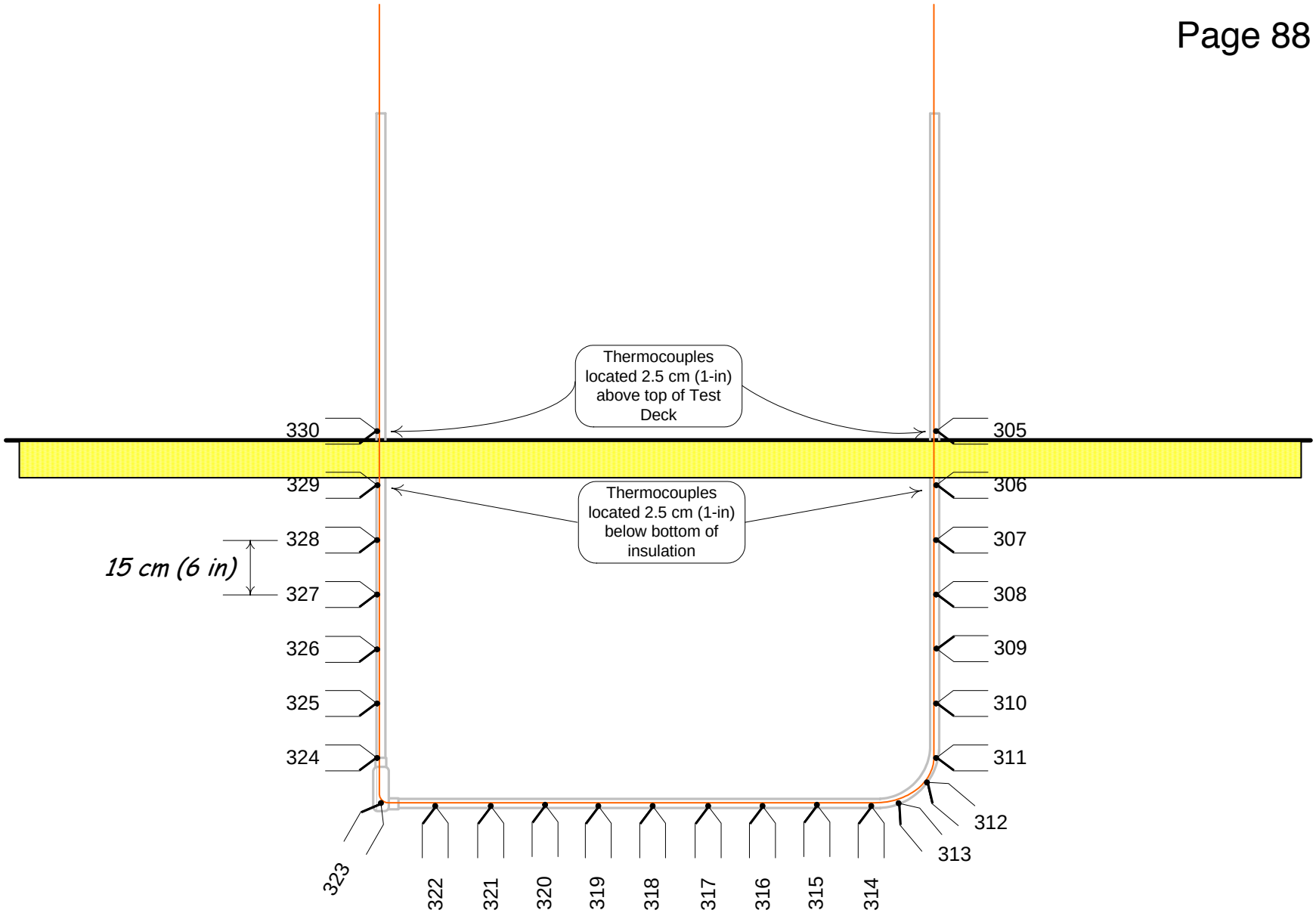

Test Specimen 3F – “Loaded” 27-mm (1-inch) conduit thermocouple locations and tag numbers on bare #8 copper wire. Note: Some uncertainty in exact thermocouple locations exists.

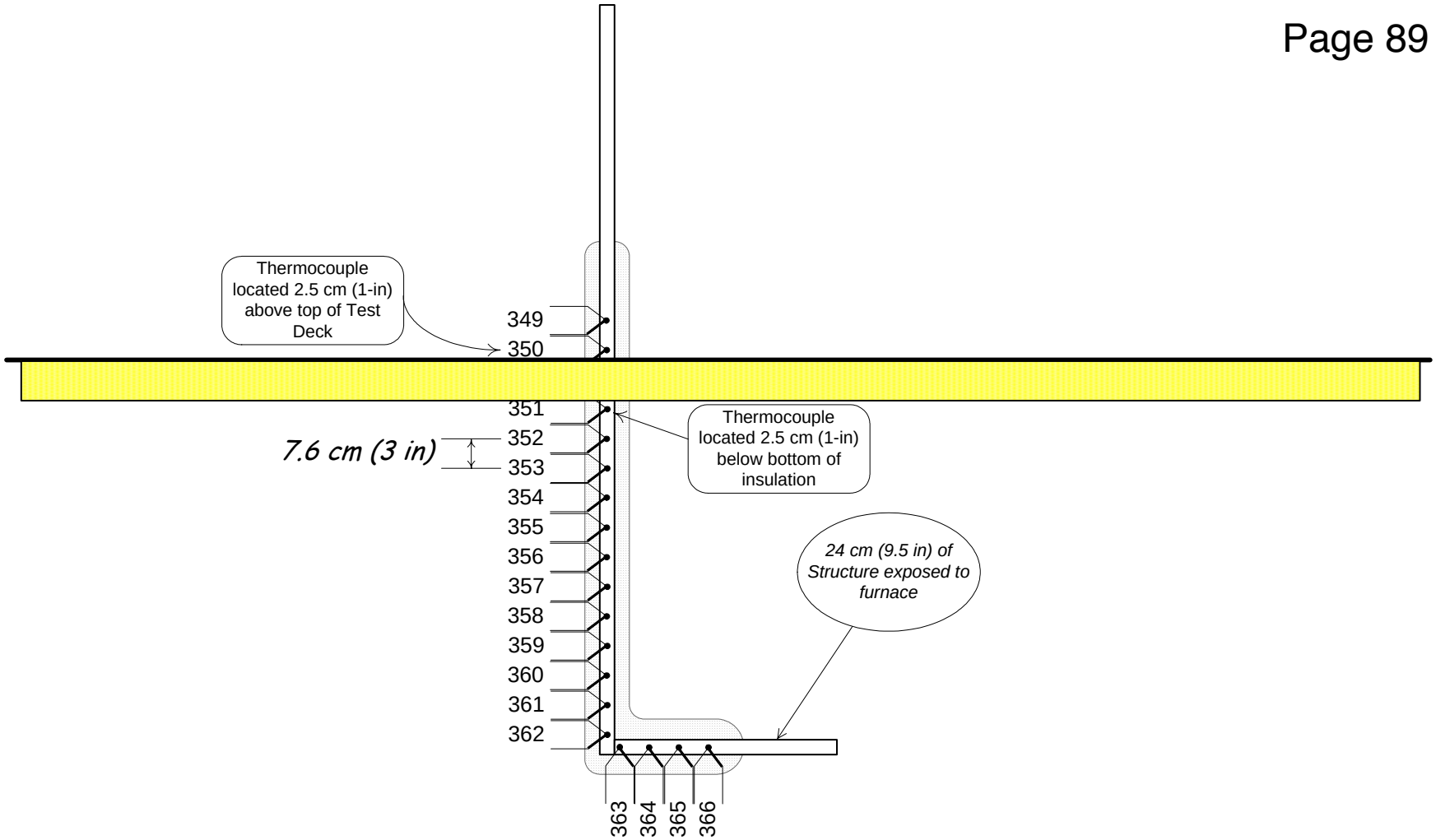

Test Specimen 3G – Unistrut support structure thermocouple locations and tag numbers.

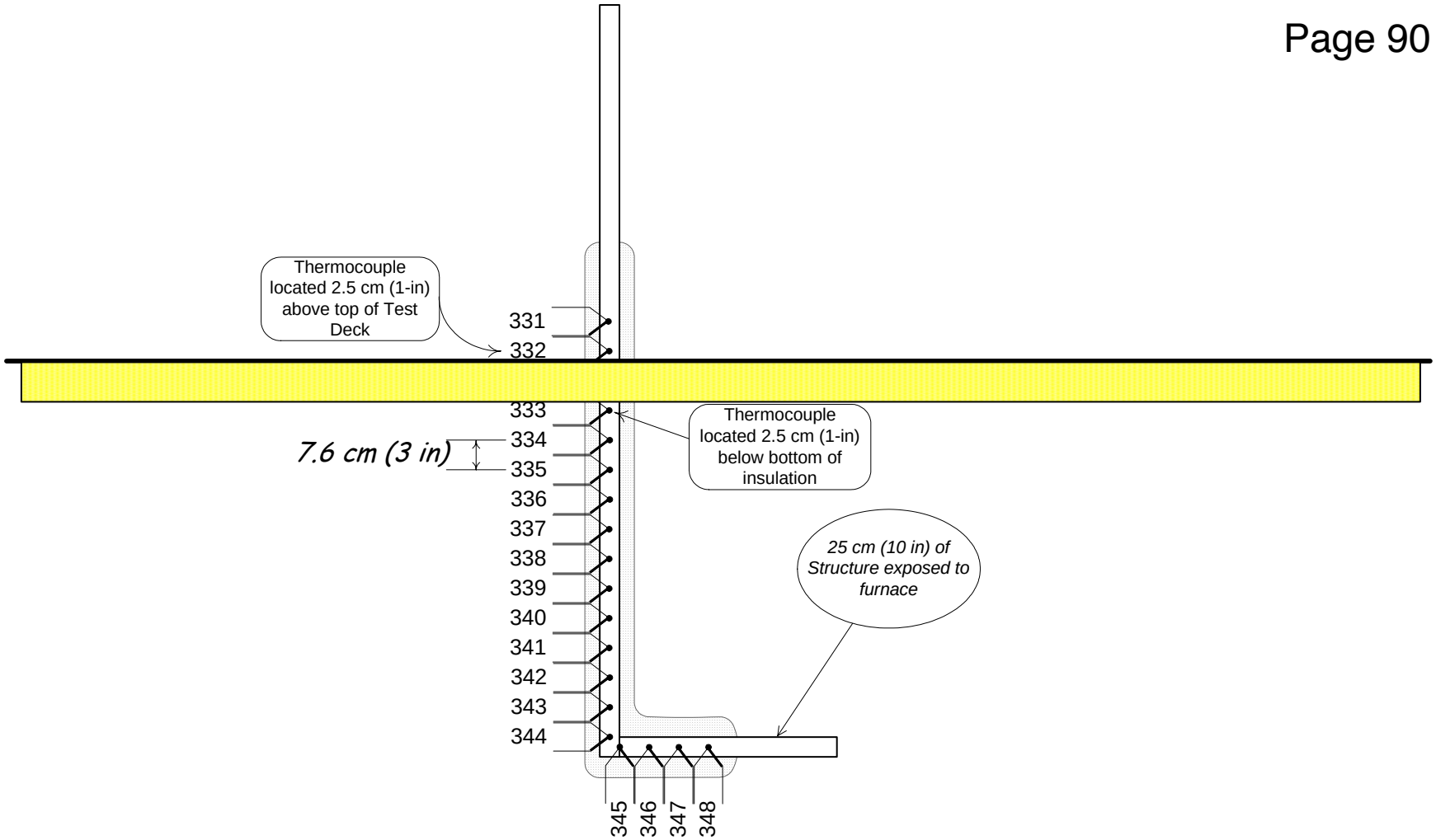

Test Specimen 3H – 50 cm X 50 cm (2 in. X 2 in) tube steel support structure thermocouple locations and tag numbers.

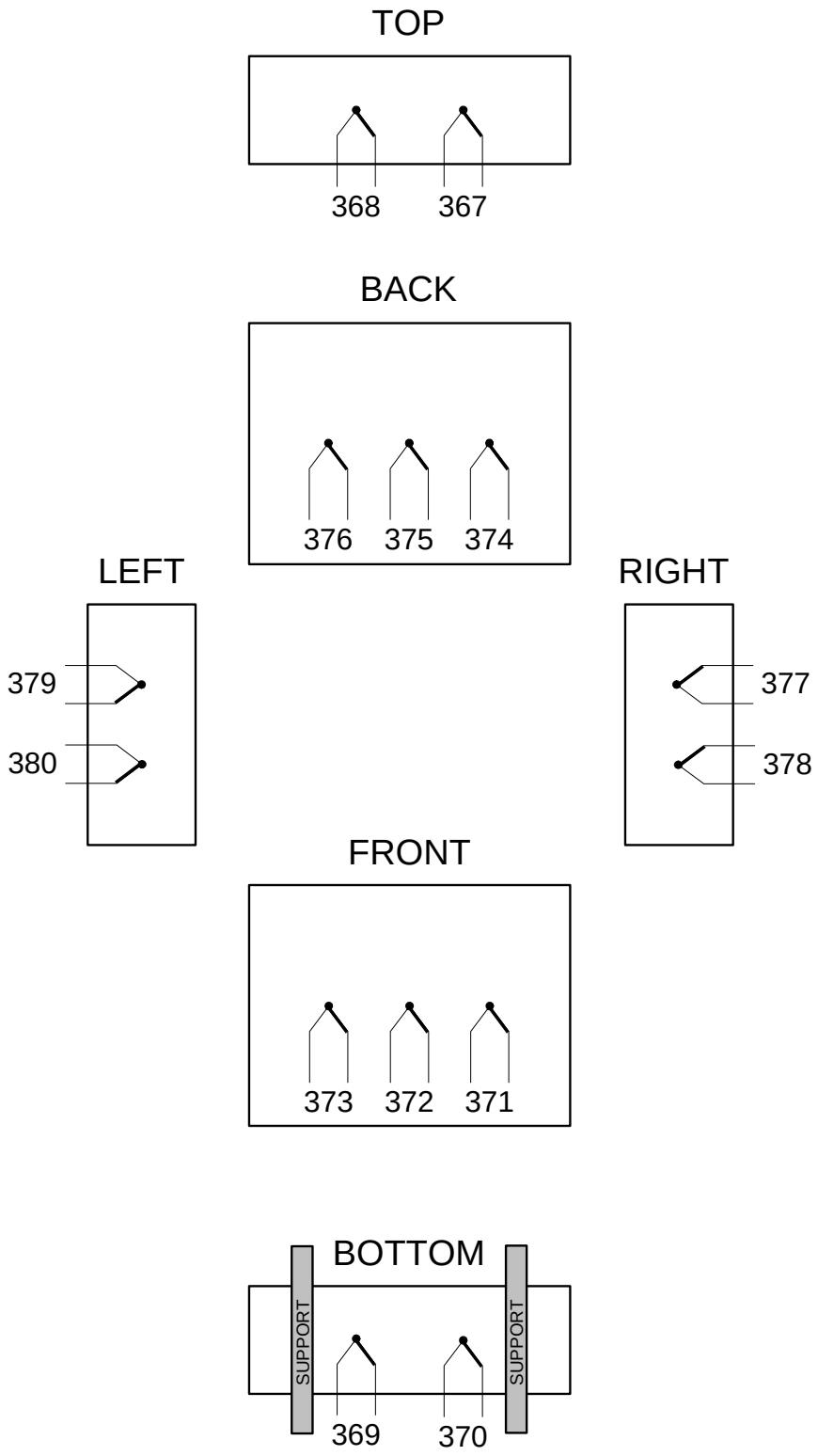

Test Specimen 3I – Junction box thermocouple locations and tag numbers. Note: Back panel is transparent in this figure to show correct orientation of thermocouple locations.

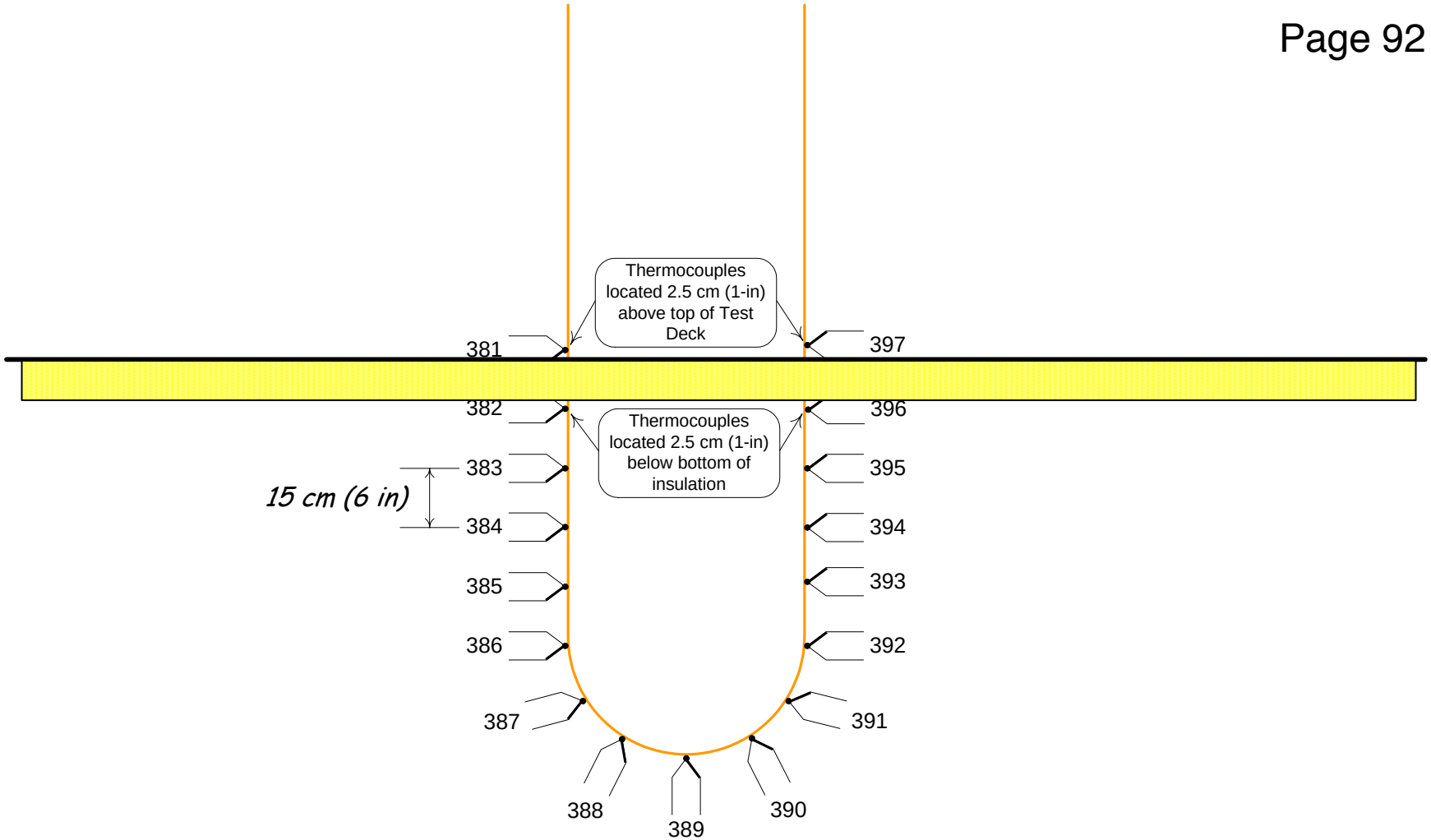

Test Specimen 3J – Cable Drop Loop thermocouple locations and tag numbers.

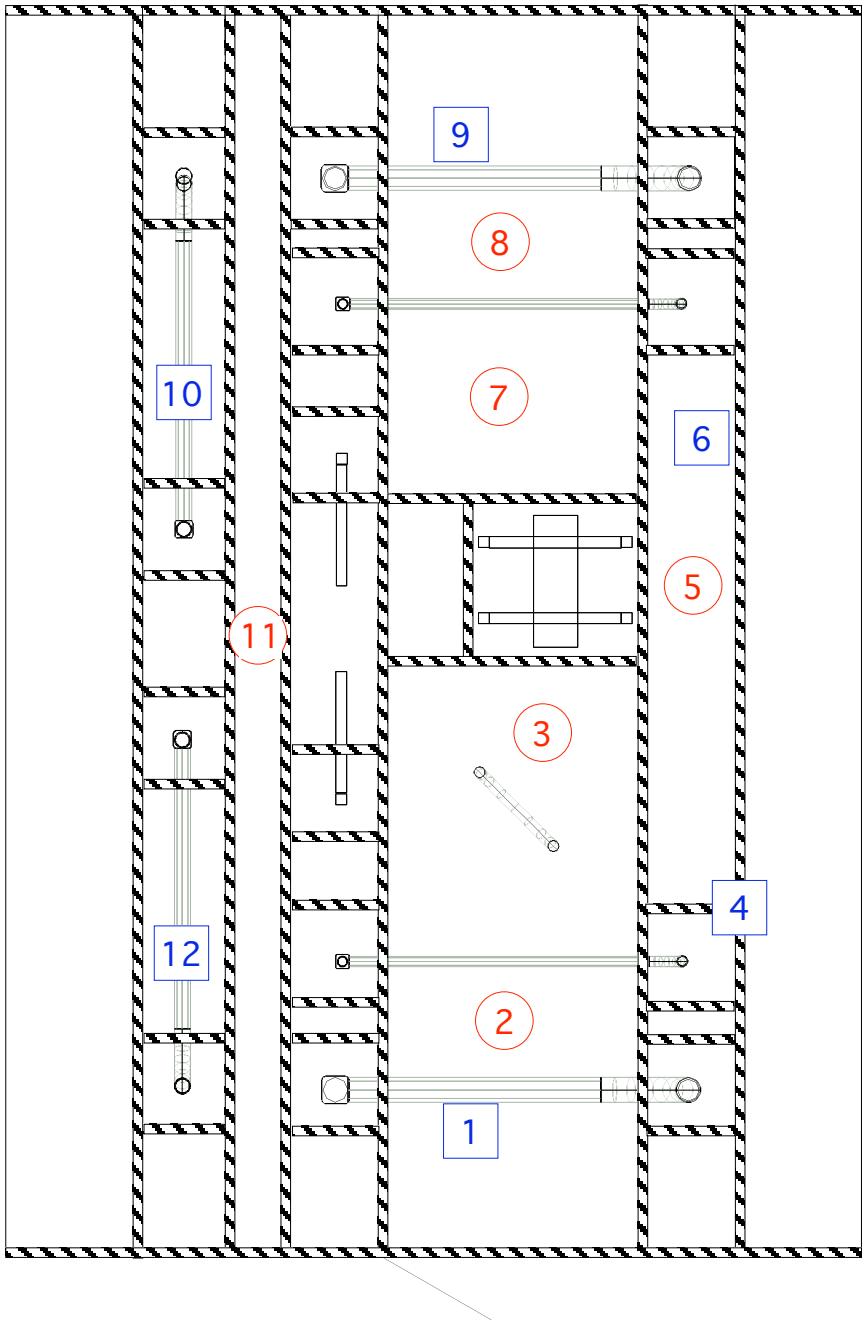

8 = Thermocouple located 12" below the bottom of the test articles.

1 = Thermocouple located 12" below the underside of the test deck.

OMEGA POINT LABORATORIES, INC. Project No. 14790-123265	
SANDIA NATIONAL LABORATORIES	
Fig. 7 Test 3 Assembly Furnace Control Thermocouple locations	
Drwn by:D.N.Priest OPL App'l: C Humphrey Sandia App'l:	Date: 5/11/05 Date: 5/11/05 Date:

Scale=1:35

Appendix D

TEST DATA

Project No. 14790-123265
Sandia National Laboratories
Furnace Interior Temperature

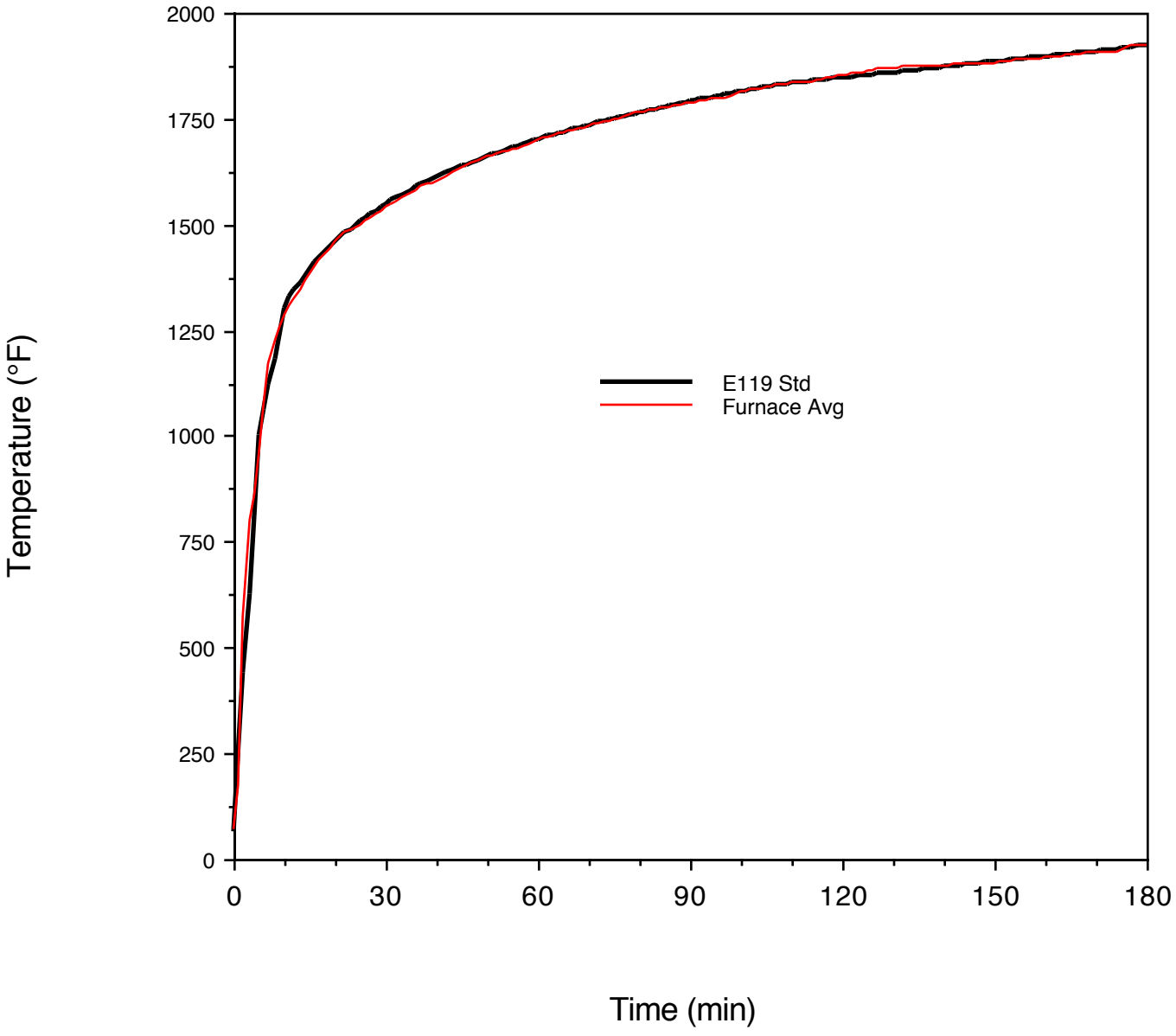

Project No. 14790-123265
Sandia National Laboratories
Item 3A: Conduit Steel Temperatures
Minimum, Average & Maximum

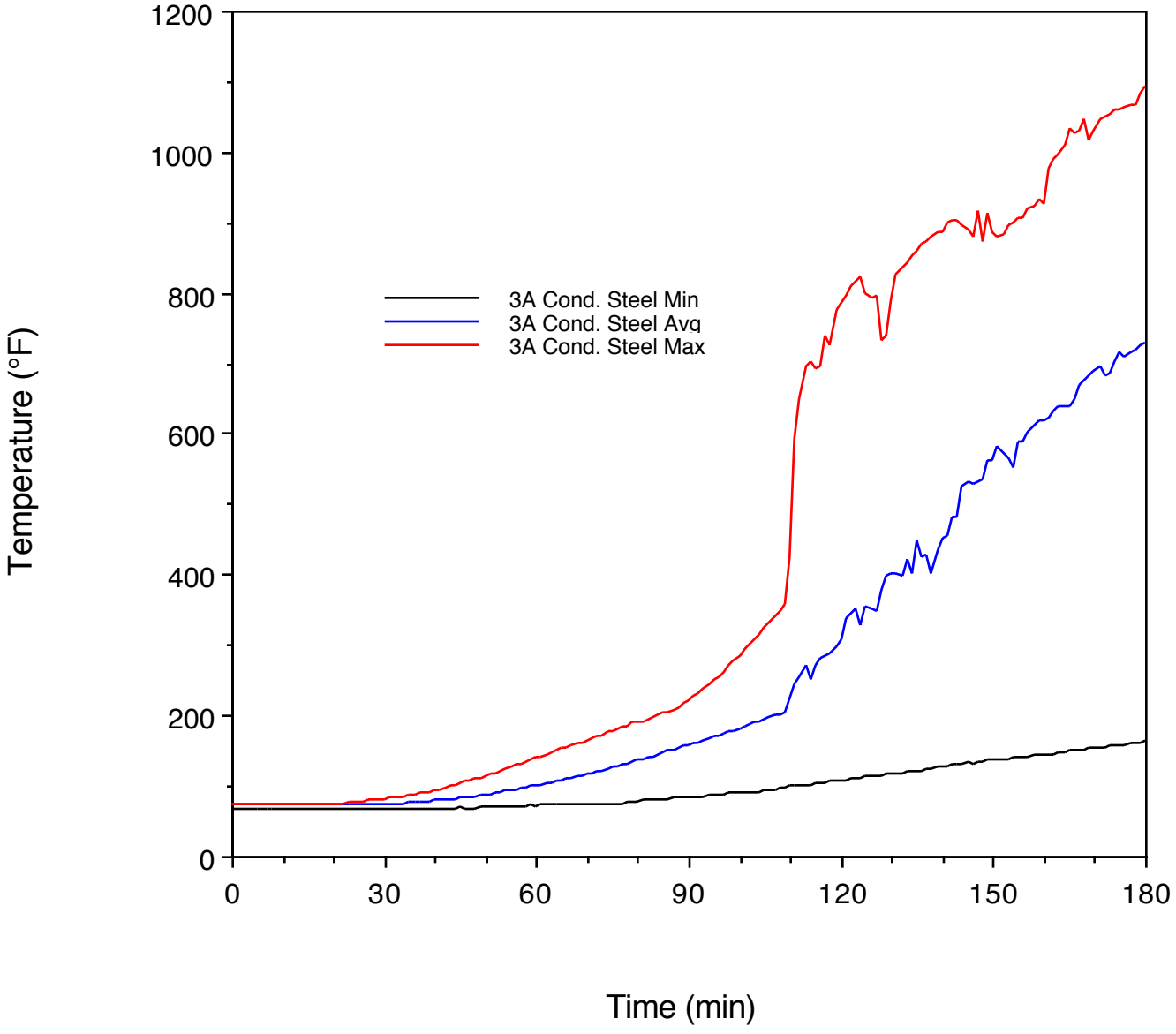

Project No. 14790-123265
Sandia National Laboratories
Item 3A: Bare #8 Temperatures
Minimum, Average & Maximum

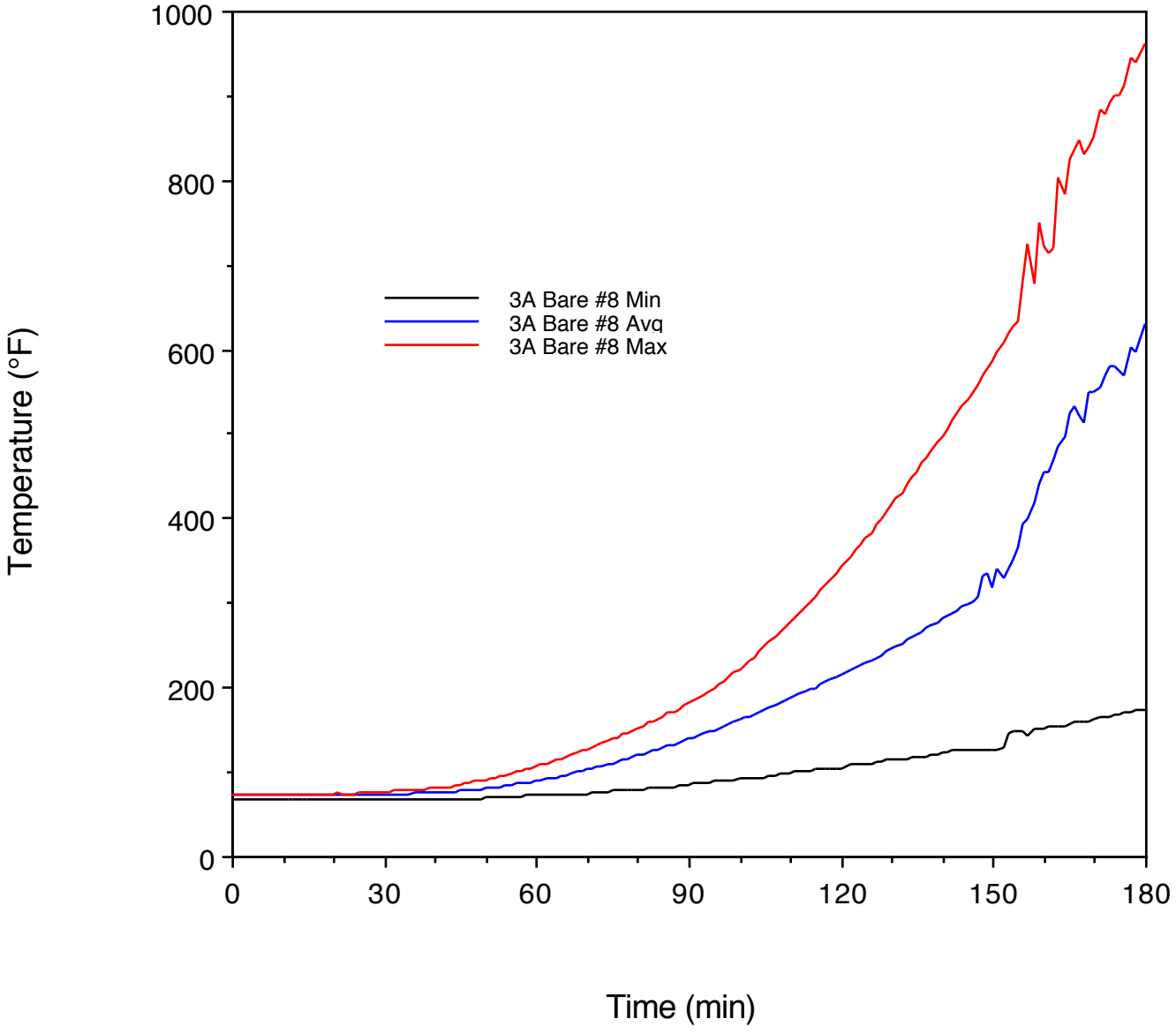

Project No. 14790-123265
Sandia National Laboratories
Item 3B: Conduit Steel Temperatures
Minimum, Average & Maximum

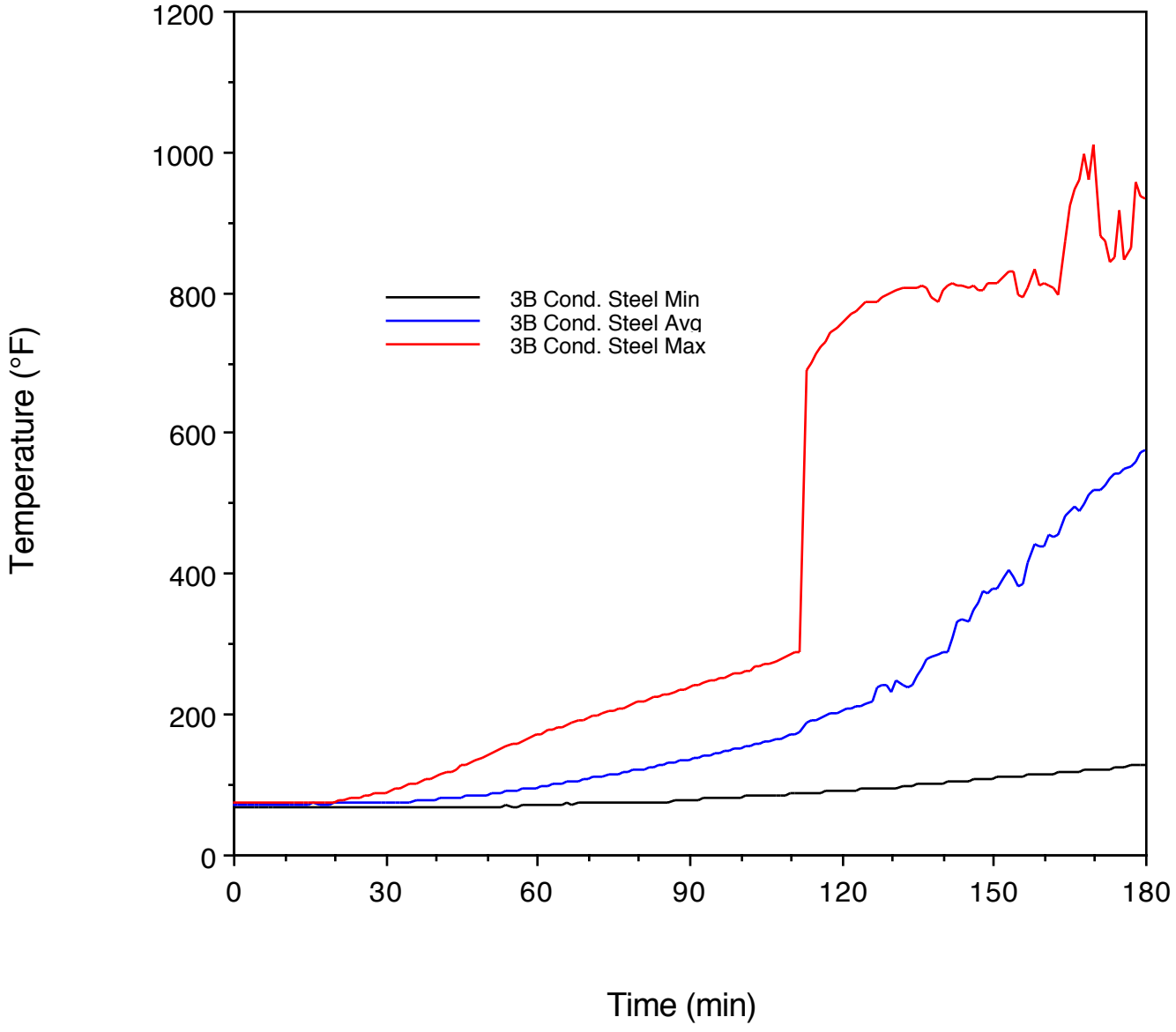

Project No. 14790-123265
Sandia National Laboratories
Item 3B: Bare #8 Temperatures
Minimum, Average & Maximum

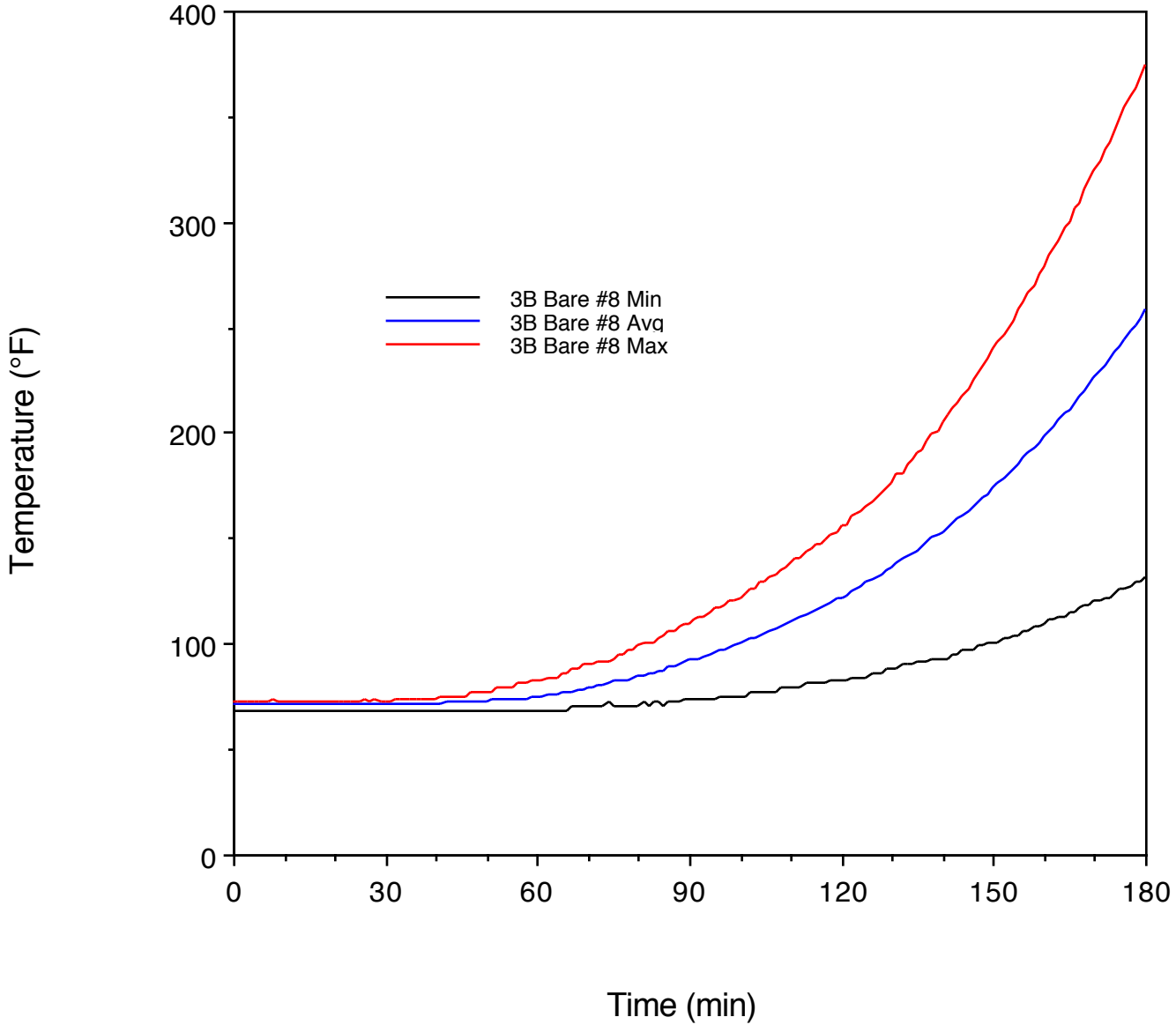

Project No. 14790-123265
Sandia National Laboratories
Item 3C: Conduit Steel Temperatures
Minimum, Average & Maximum

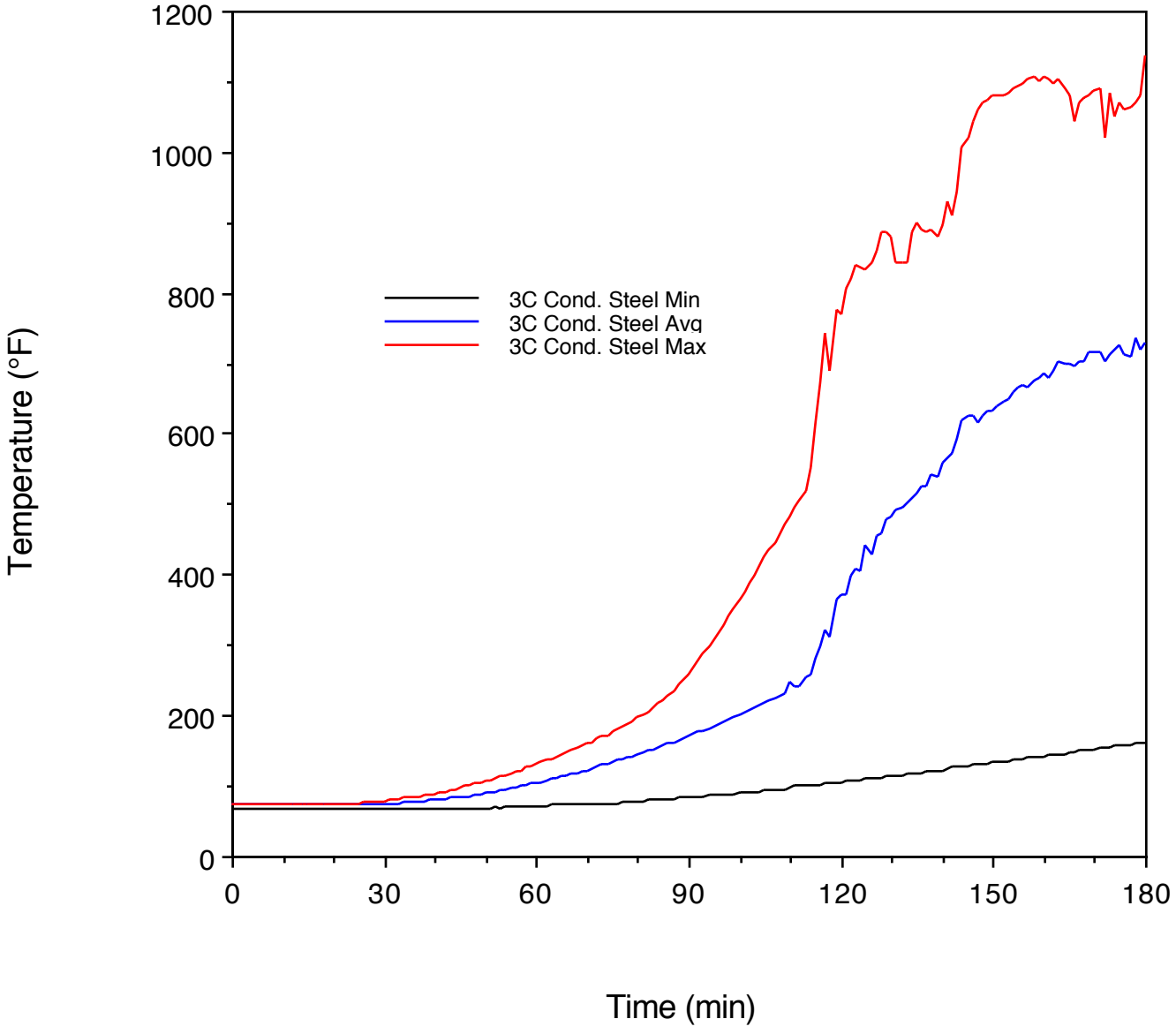

Project No. 14790-123265
Sandia National Laboratories
Item 3C: Bare #8 Temperatures
Minimum, Average & Maximum

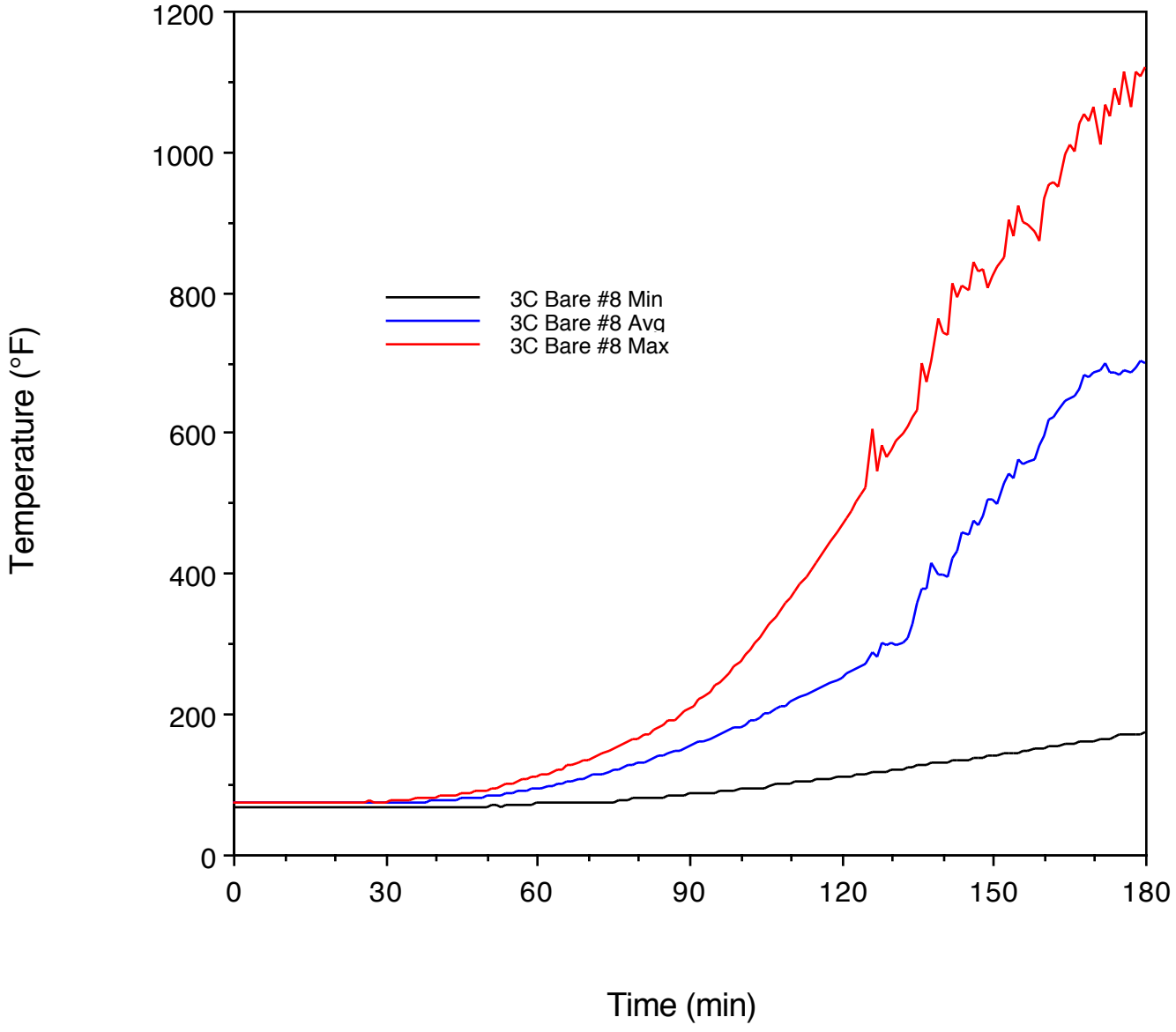

Project No. 14790-123265
Sandia National Laboratories
Item 3D: Conduit Steel Temperatures
Minimum, Average & Maximum

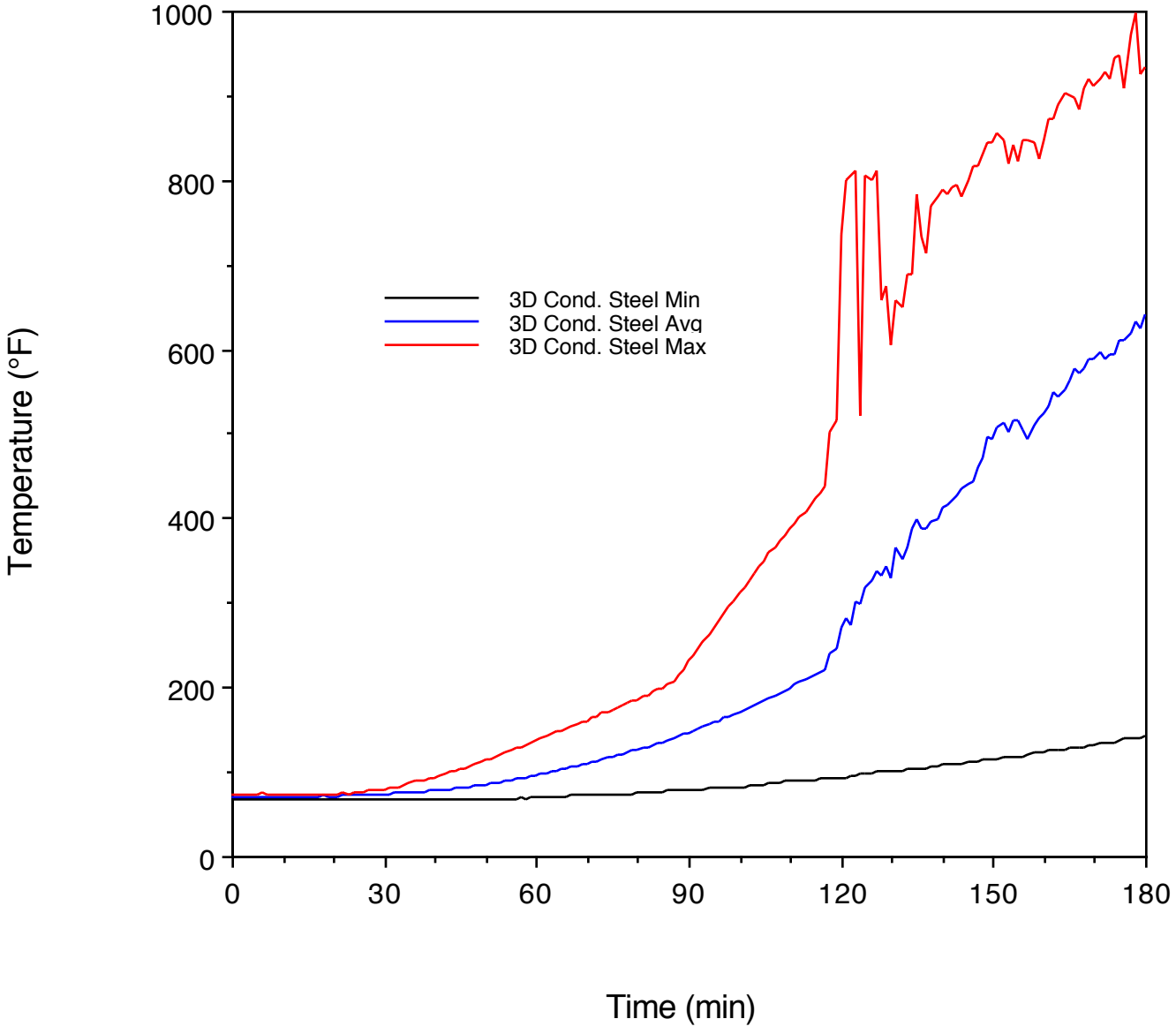

Project No. 14790-123265
Sandia National Laboratories
Item 3D: Bare #8 Temperatures
Minimum, Average & Maximum

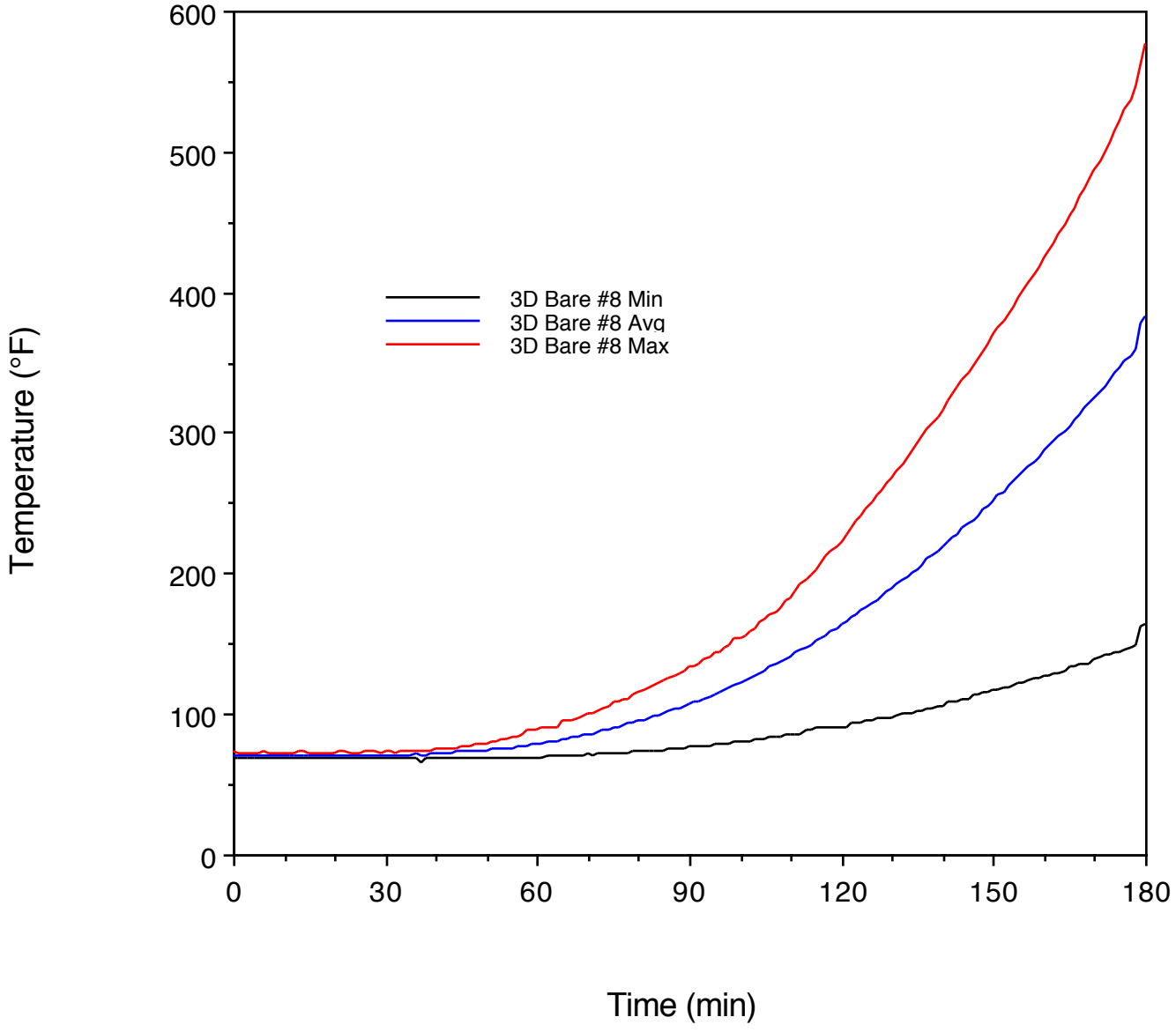

Project No. 14790-123265
Sandia National Laboratories
Item 3E: Conduit Steel Temperatures
Minimum, Average & Maximum

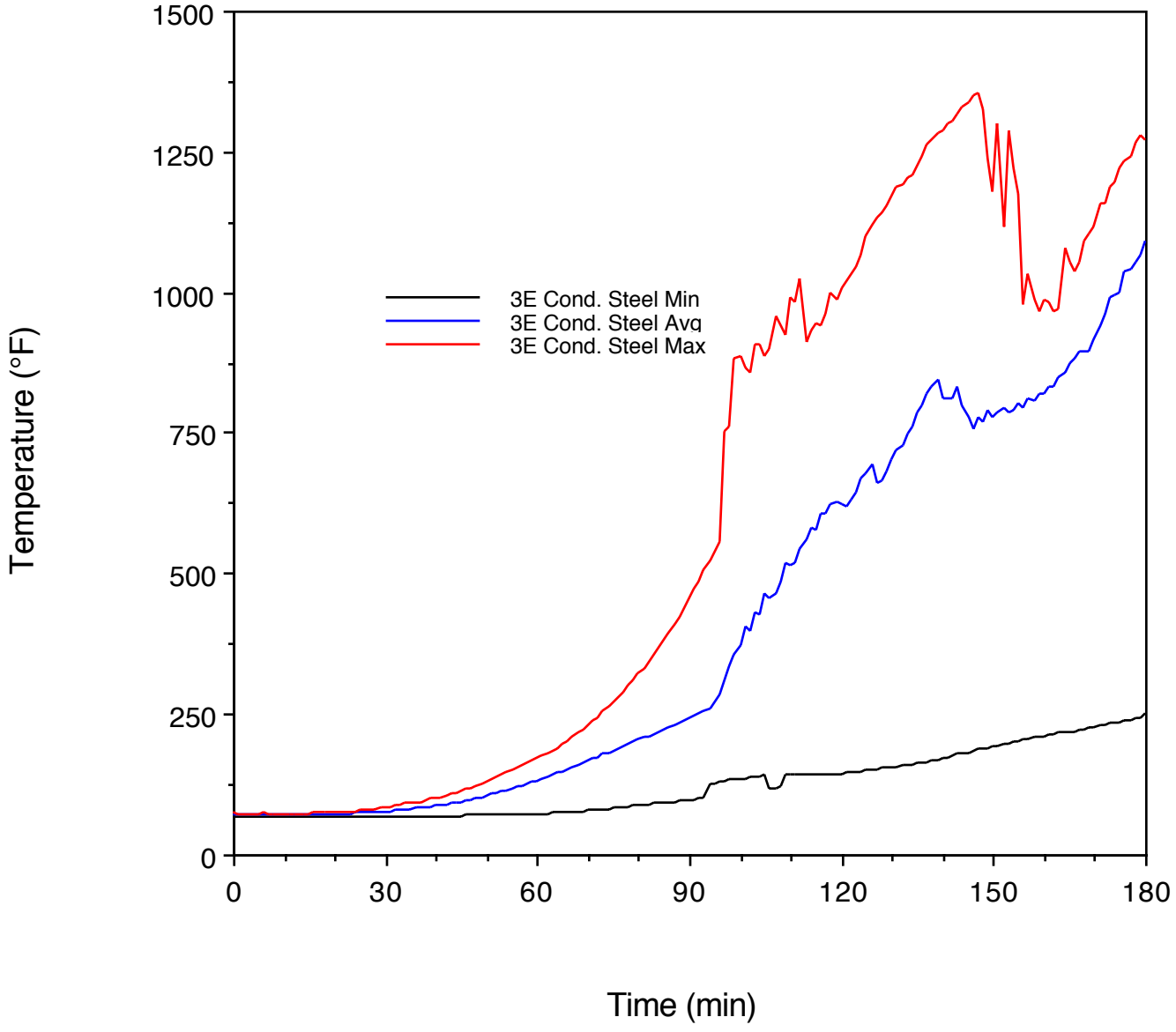

Project No. 14790-123265
Sandia National Laboratories
Item 3E: Bare #8 Temperatures
Minimum, Average & Maximum

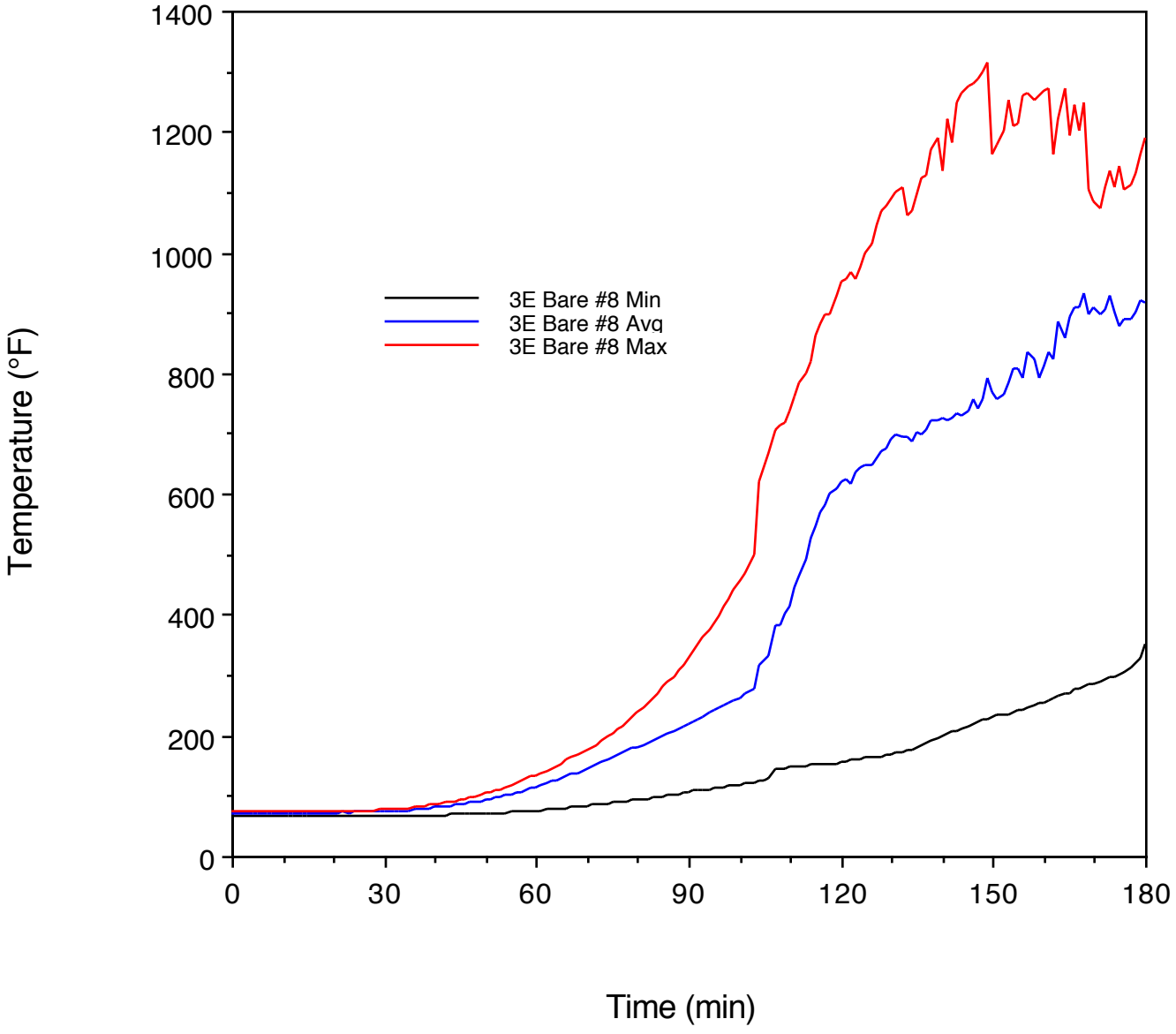

Project No. 14790-123265
Sandia National Laboratories
Item 3F: Conduit Steel Temperatures
Minimum, Average & Maximum

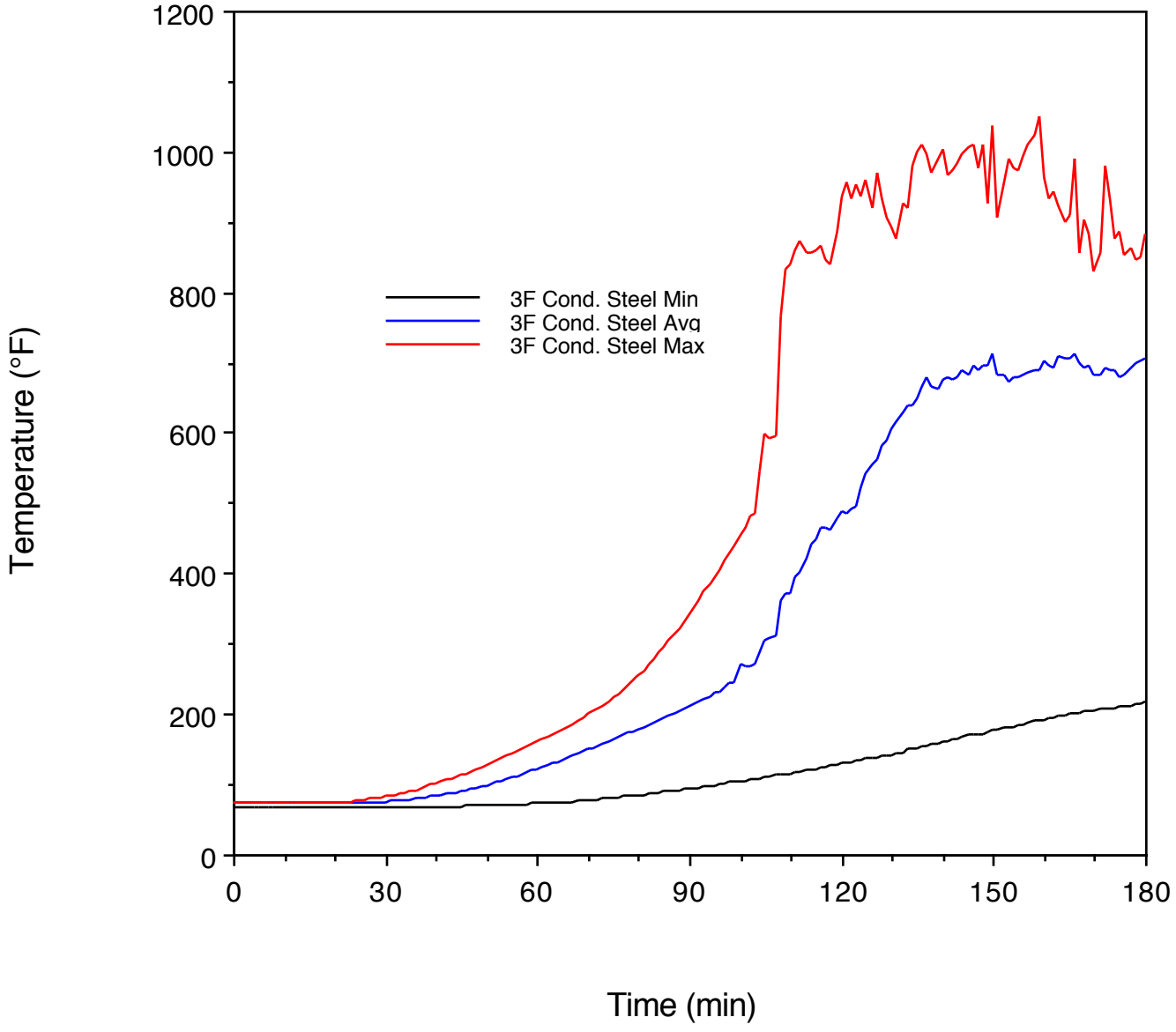

Project No. 14790-123265
Sandia National Laboratories
Item 3F: Bare #8 Temperatures
Minimum, Average & Maximum

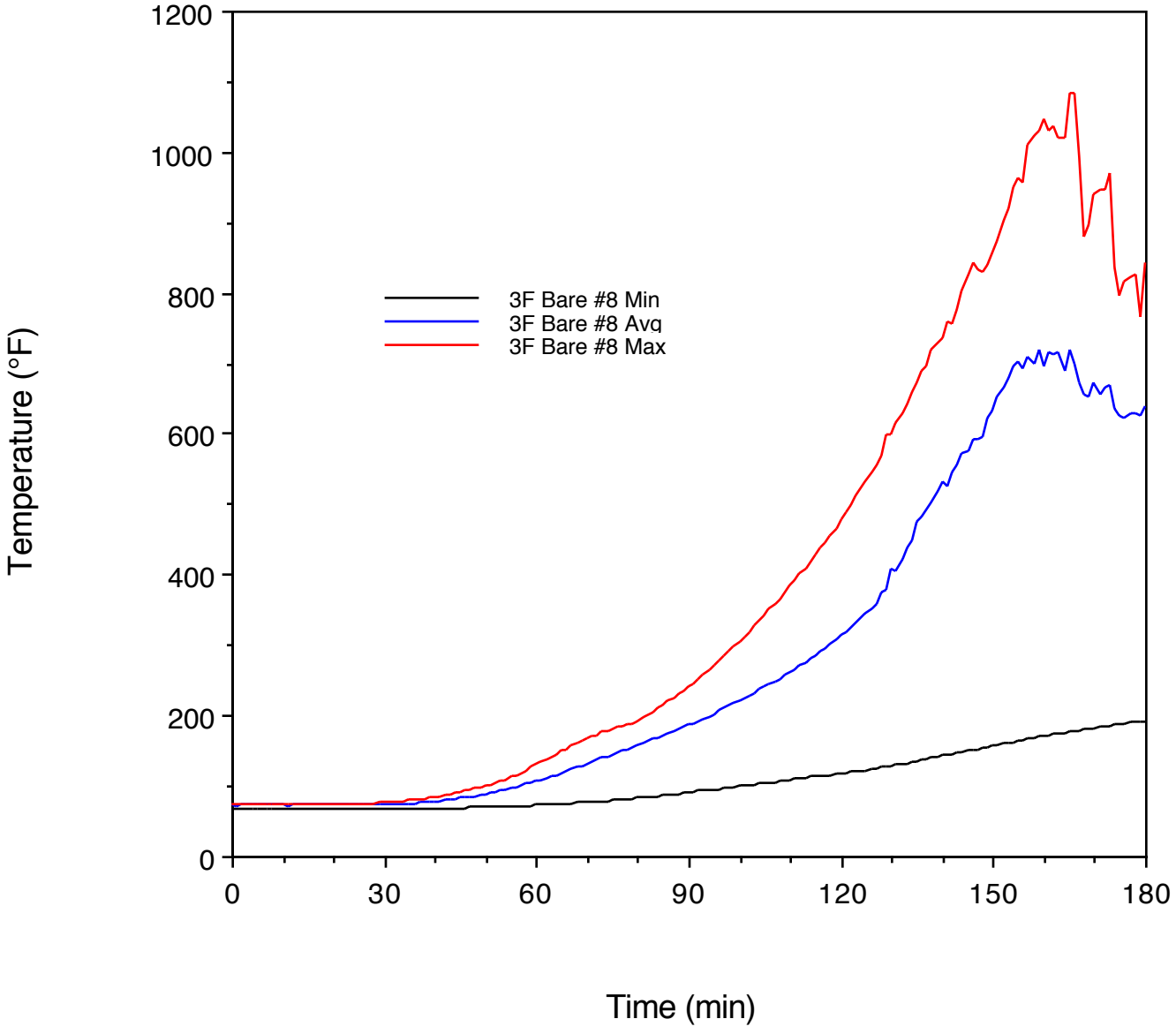

Project No. 14790-123265
Sandia National Laboratories
Item 3I: Junction Box Temperatures
Minimum, Average & Maximum

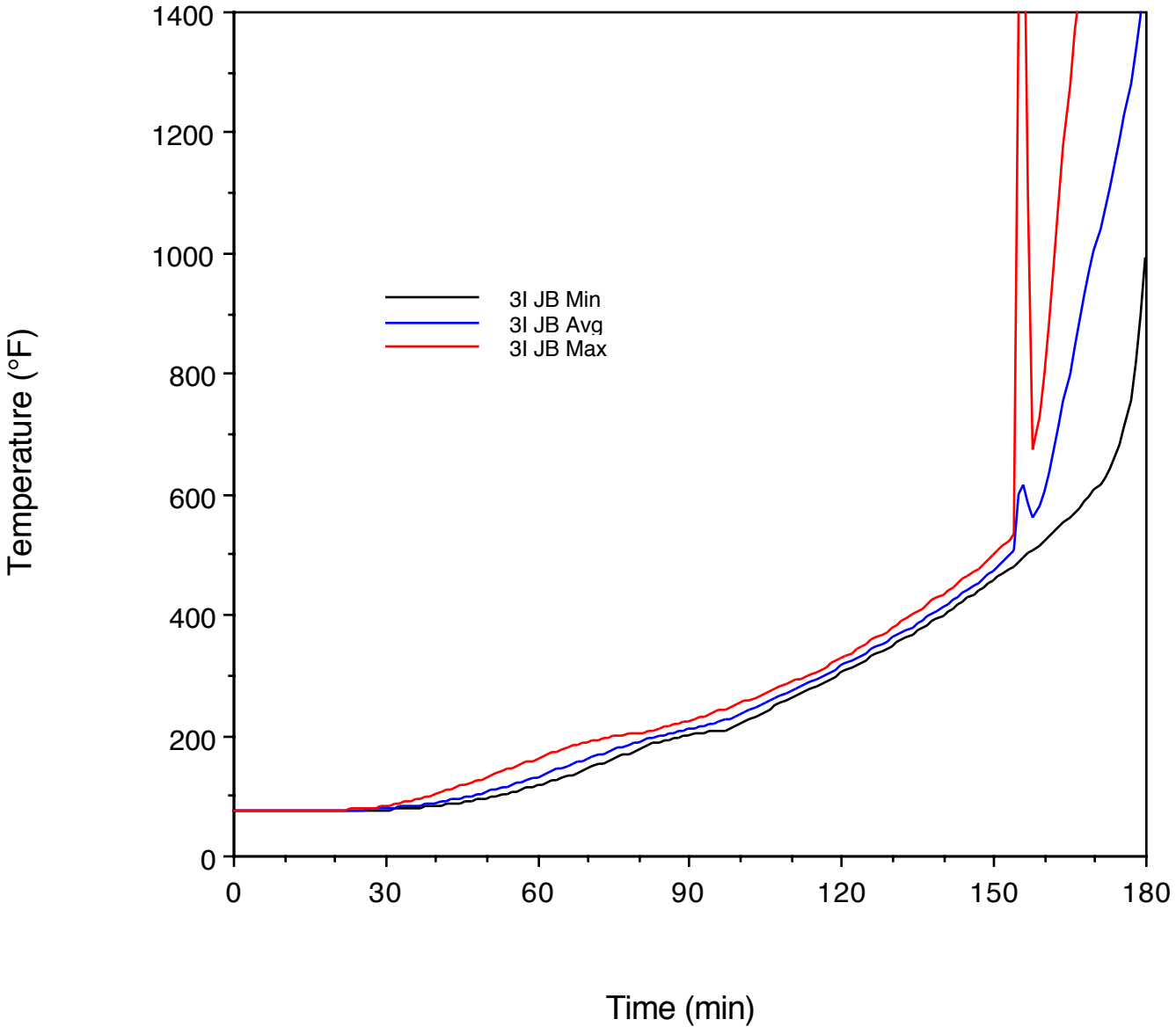

Project No. 14790-123265
Sandia National Laboratories
Item 3J: Cable Air Drop Temperatures
Minimum, Average & Maximum

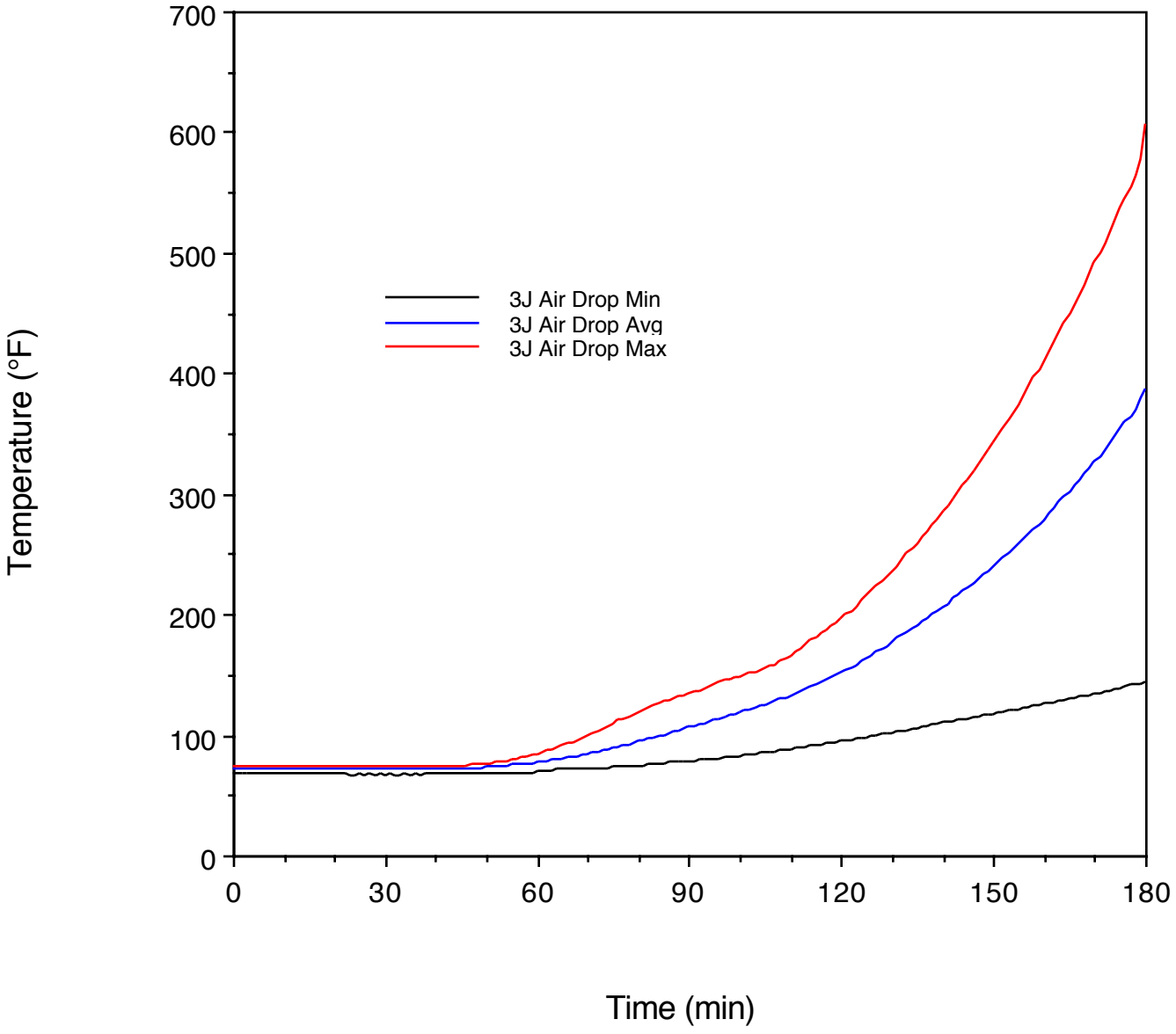

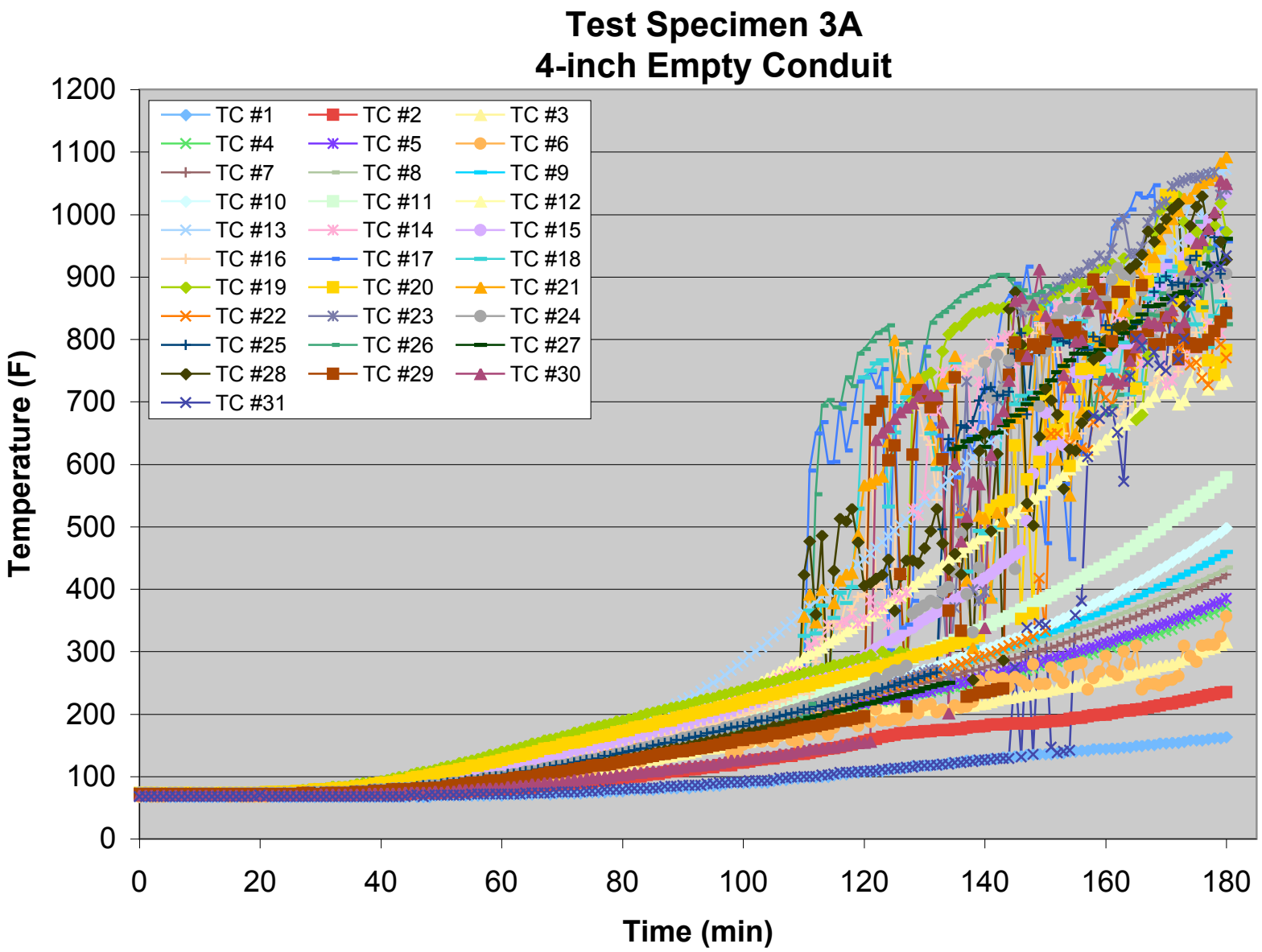
Test Specimen 3A
4-inch Empty Conduit
Temperature (F)
Time (min)
0
100
200
300
400
500
600
700
800
900
1000
1100
1200
0
20
40
60
80
100
120
140
160
180
TC #1
TC #2
TC #3
TC #4
TC #5
TC #6
TC #7
TC #8
TC #9
TC #10
TC #11
TC #12
TC #13
TC #14
TC #15
TC #16
TC #17
TC #18
TC #19
TC #20
TC #21
TC #22
TC #23
TC #24
TC #25
TC #26
TC #27
TC #28
TC #29
TC #30
TC #31

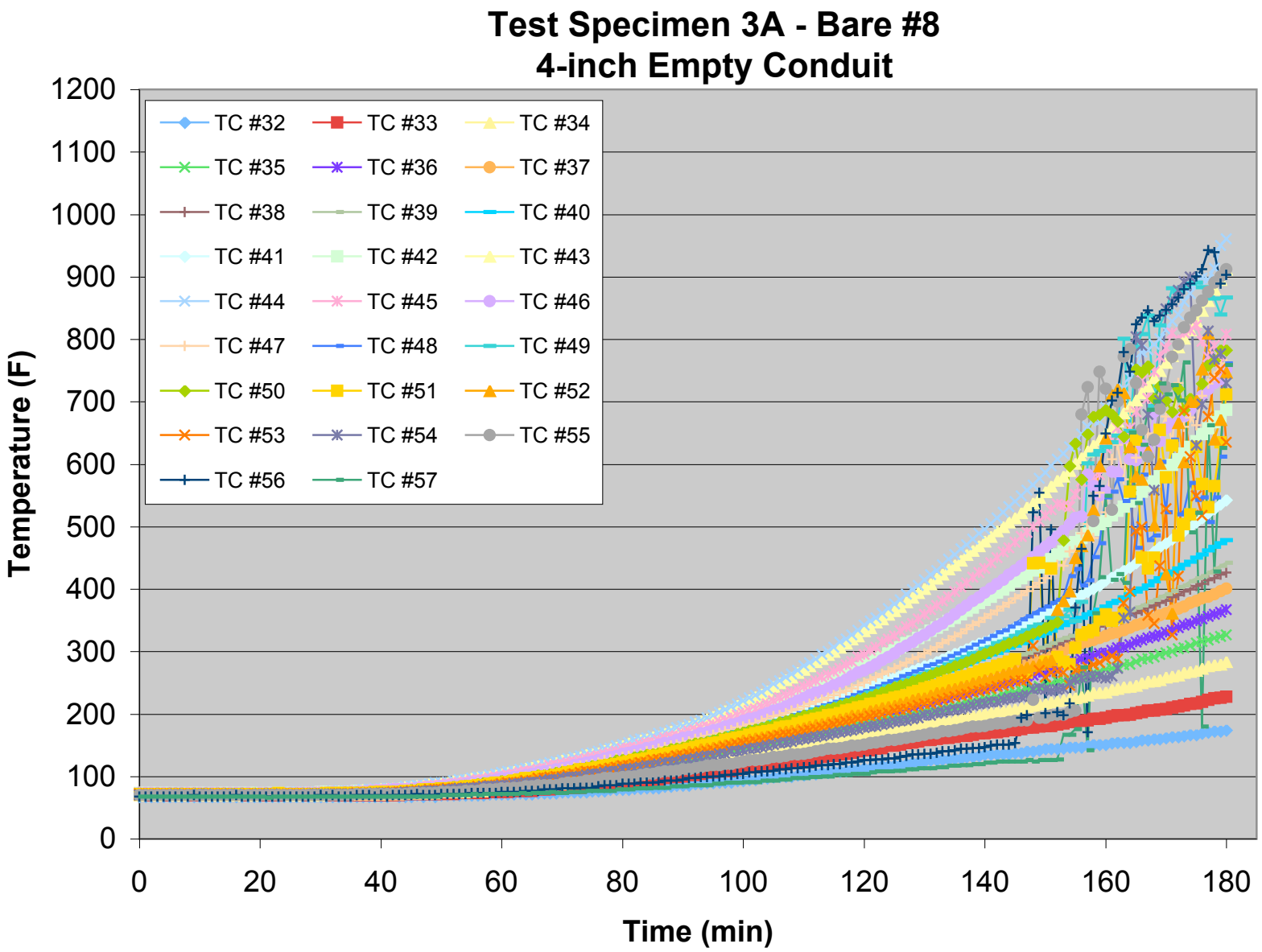
Test Specimen 3A - Bare #8
4-inch Empty Conduit
Temperature (F)
Time (min)
0
100
200
300
400
500
600
700
800
900
1000
1100
1200
0
20
40
60
80
100
120
140
160
180
TC #32
TC #33
TC #34
TC #35
TC #36
TC #37
TC #38
TC #39
TC #40
TC #41
TC #42
TC #43
TC #44
TC #45
TC #46
TC #47
TC #48
TC #49
TC #50
TC #51
TC #52
TC #53
TC #54
TC #55
TC #56
TC #57

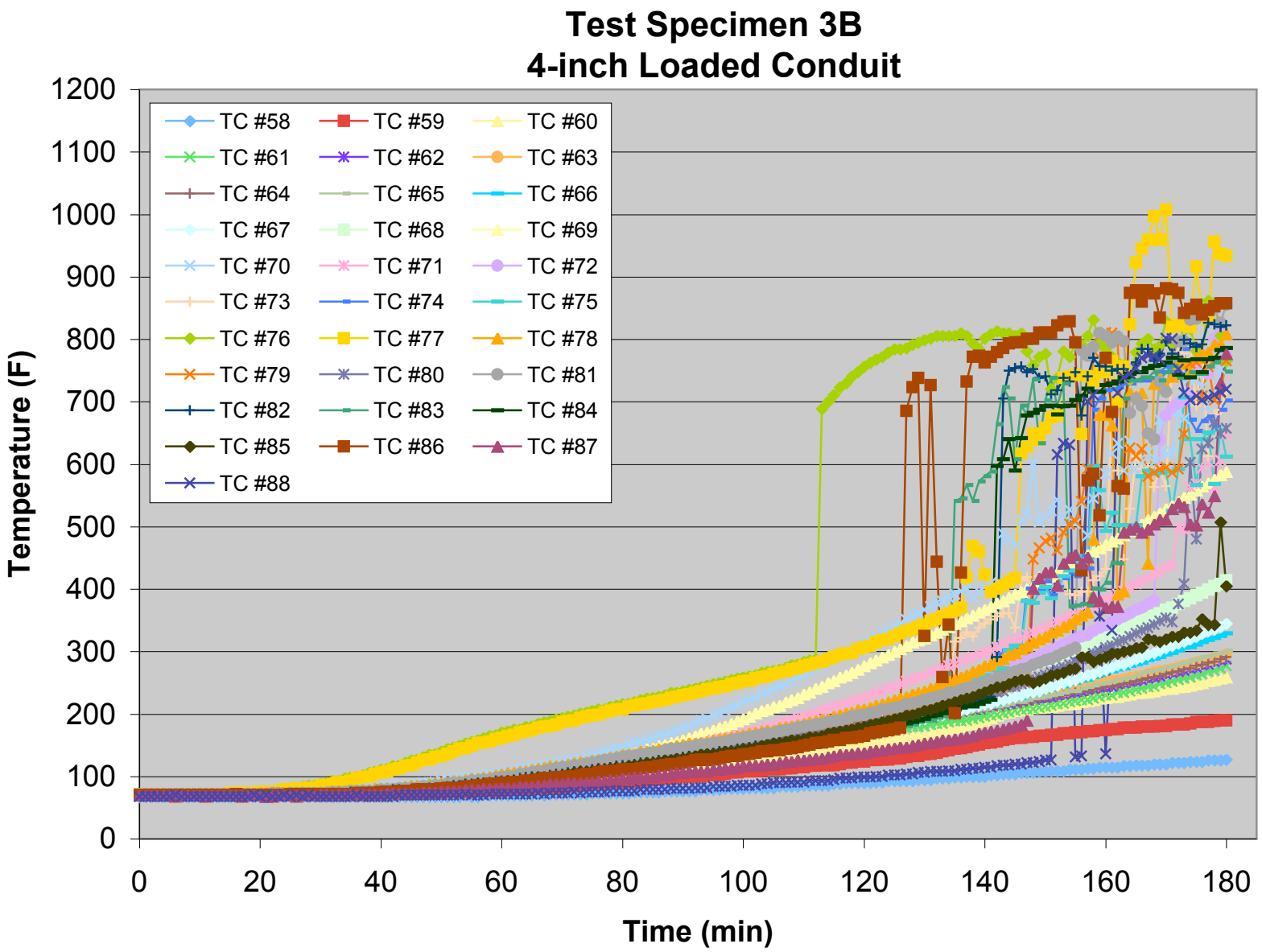
Test Specimen 3B
4-inch Loaded Conduit
Temperature (F)
Time (min)
0
100
200
300
400
500
600
700
800
900
1000
1100
1200
0
20
40
60
80
100
120
140
160
180
TC #58
TC #59
TC #60
TC #61
TC #62
TC #63
TC #64
TC #65
TC #66
TC #67
TC #68
TC #69
TC #70
TC #71
TC #72
TC #73
TC #74
TC #75
TC #76
TC #77
TC #78
TC #79
TC #80
TC #81
TC #82
TC #83
TC #84
TC #85
TC #86
TC #87
TC #88

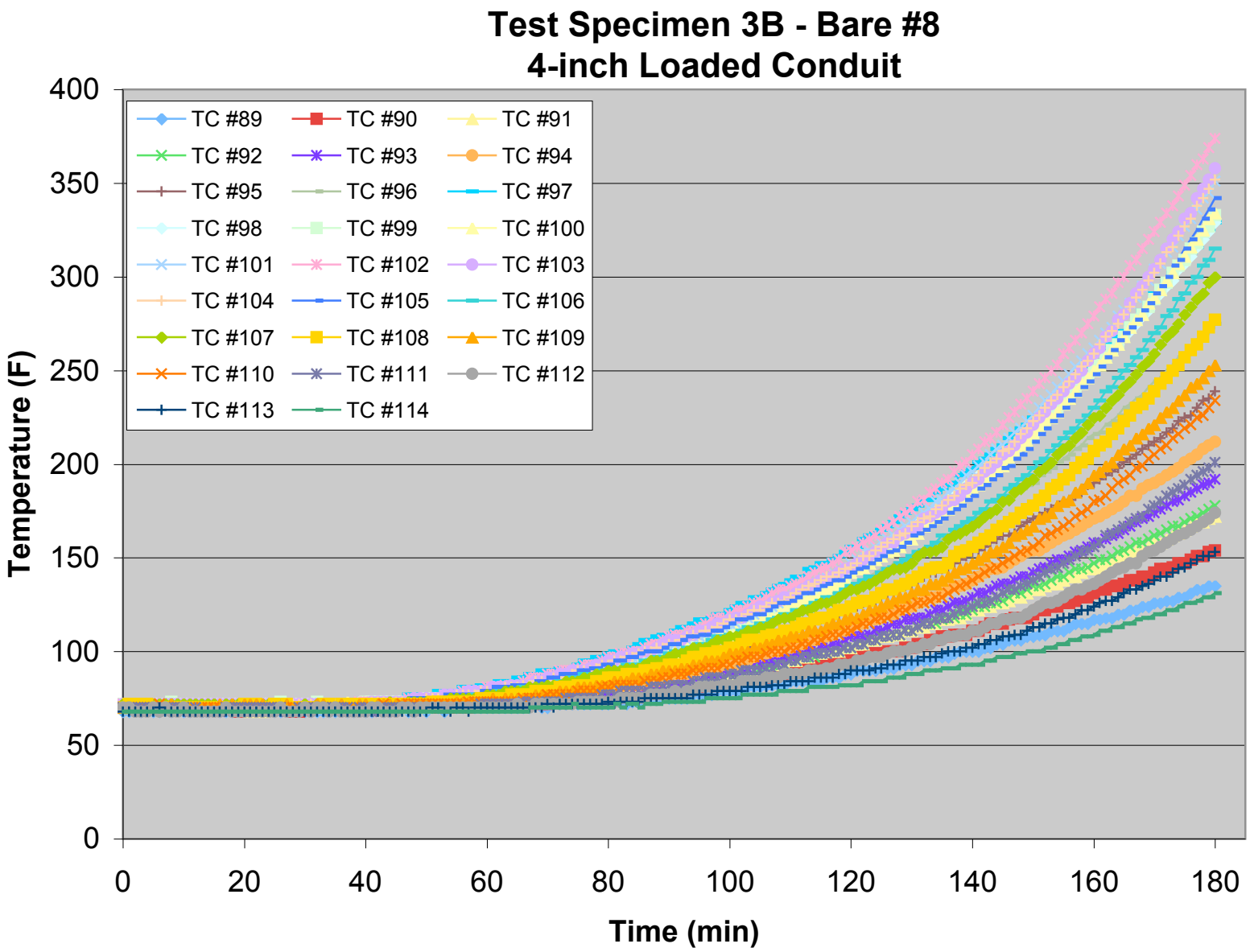
Test Specimen 3B - Bare #8
4-inch Loaded Conduit
Temperature (F)
Time (min)
0
50
100
150
200
250
300
350
400
0
20
40
60
80
100
120
140
160
180
TC #89
TC #90
TC #91
TC #92
TC #93
TC #94
TC #95
TC #96
TC #97
TC #98
TC #99
TC #100
TC #101
TC #102
TC #103
TC #104
TC #105
TC #106
TC #107
TC #108
TC #109
TC #110
TC #111
TC #112
TC #113
TC #114

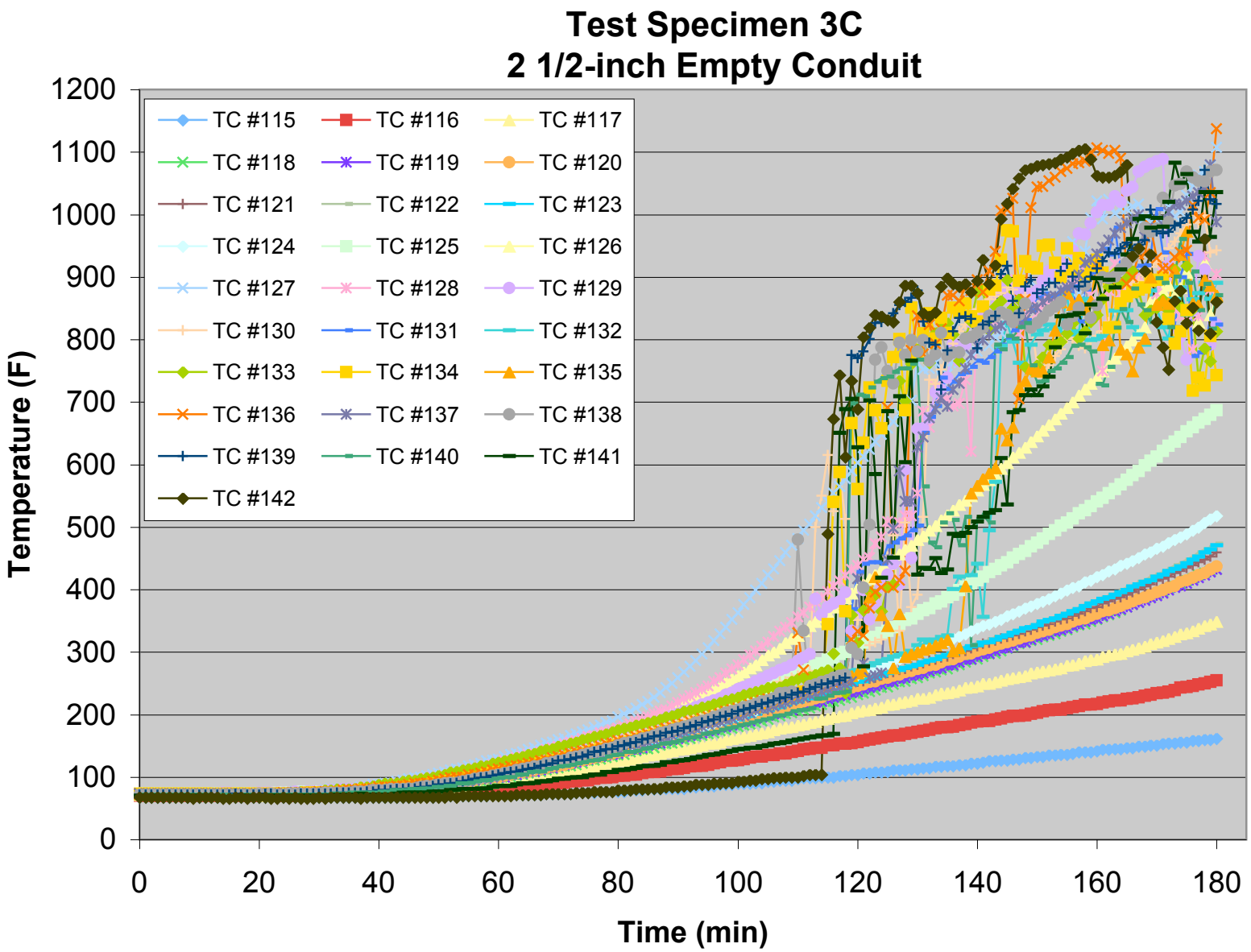
Test Specimen 3C
2 1/2-inch Empty Conduit
Temperature (F)
Time (min)
0
100
200
300
400
500
600
700
800
900
1000
1100
1200
0
20
40
60
80
100
120
140
160
180
TC #115
TC #116
TC #117
TC #118
TC #119
TC #120
TC #121
TC #122
TC #123
TC #124
TC #125
TC #126
TC #127
TC #128
TC #129
TC #130
TC #131
TC #132
TC #133
TC #134
TC #135
TC #136
TC #137
TC #138
TC #139
TC #140
TC #141
TC #142

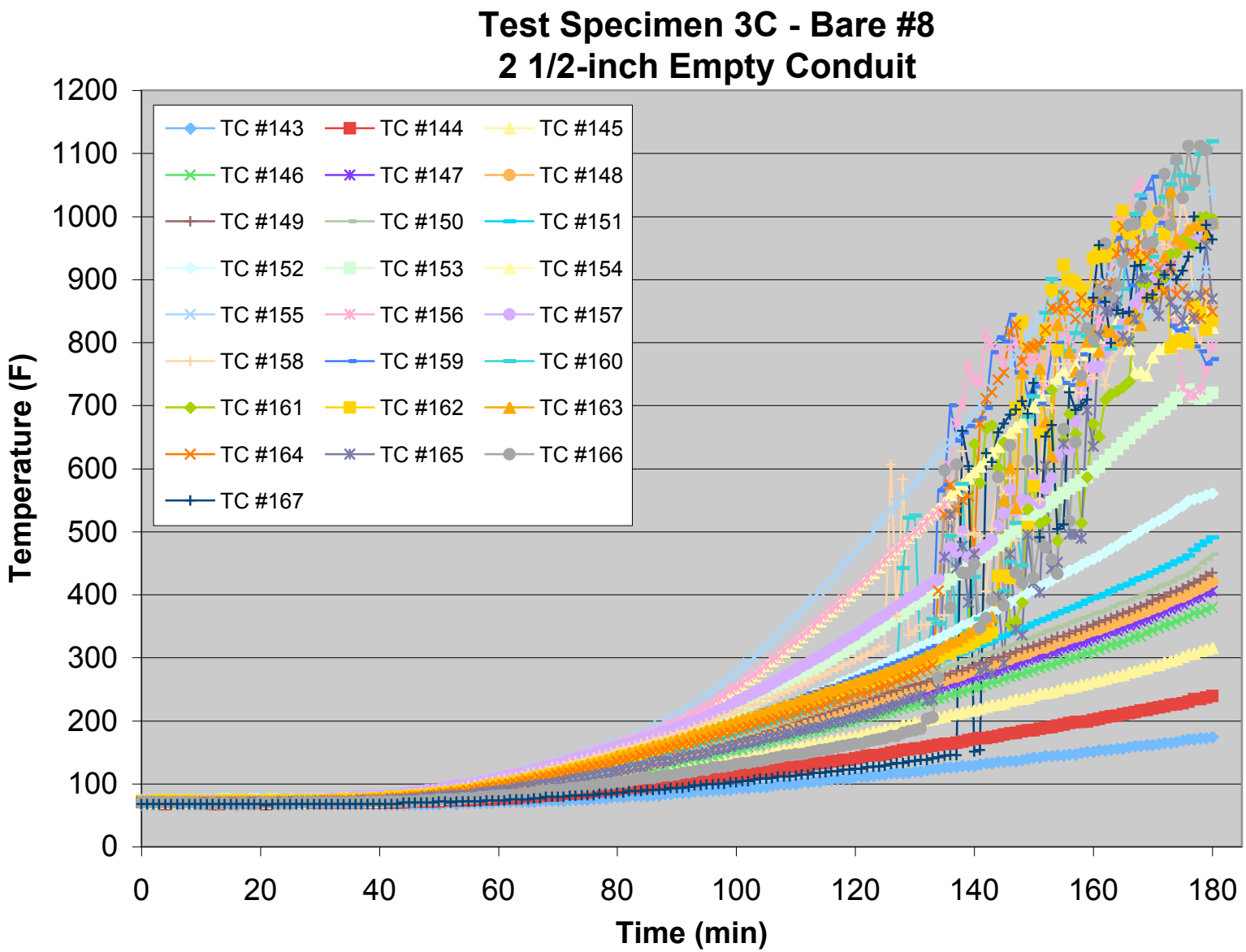
Test Specimen 3C - Bare #8
2 1/2-inch Empty Conduit
Temperature (F)
Time (min)
0
100
200
300
400
500
600
700
800
900
1000
1100
1200
0
20
40
60
80
100
120
140
160
180
TC #143
TC #144
TC #145
TC #146
TC #147
TC #148
TC #149
TC #150
TC #151
TC #152
TC #153
TC #154
TC #155
TC #156
TC #157
TC #158
TC #159
TC #160
TC #161
TC #162
TC #163
TC #164
TC #165
TC #166
TC #167

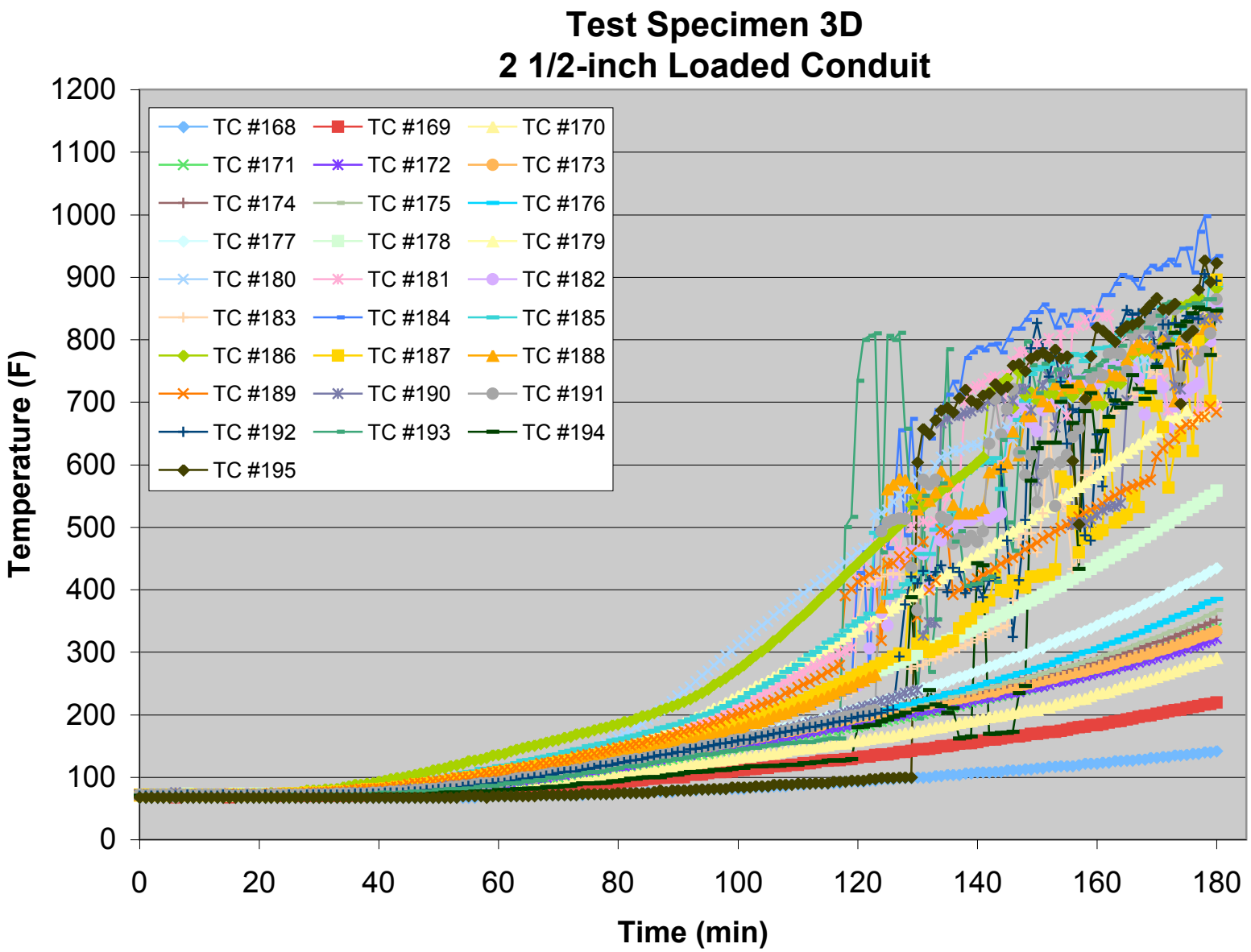
Test Specimen 3D
2 1/2-inch Loaded Conduit
Temperature (F)
Time (min)
0
100
200
300
400
500
600
700
800
900
1000
1100
1200
0
20
40
60
80
100
120
140
160
180
TC #168
TC #169
TC #170
TC #171
TC #172
TC #173
TC #174
TC #175
TC #176
TC #177
TC #178
TC #179
TC #180
TC #181
TC #182
TC #183
TC #184
TC #185
TC #186
TC #187
TC #188
TC #189
TC #190
TC #191
TC #192
TC #193
TC #194
TC #195

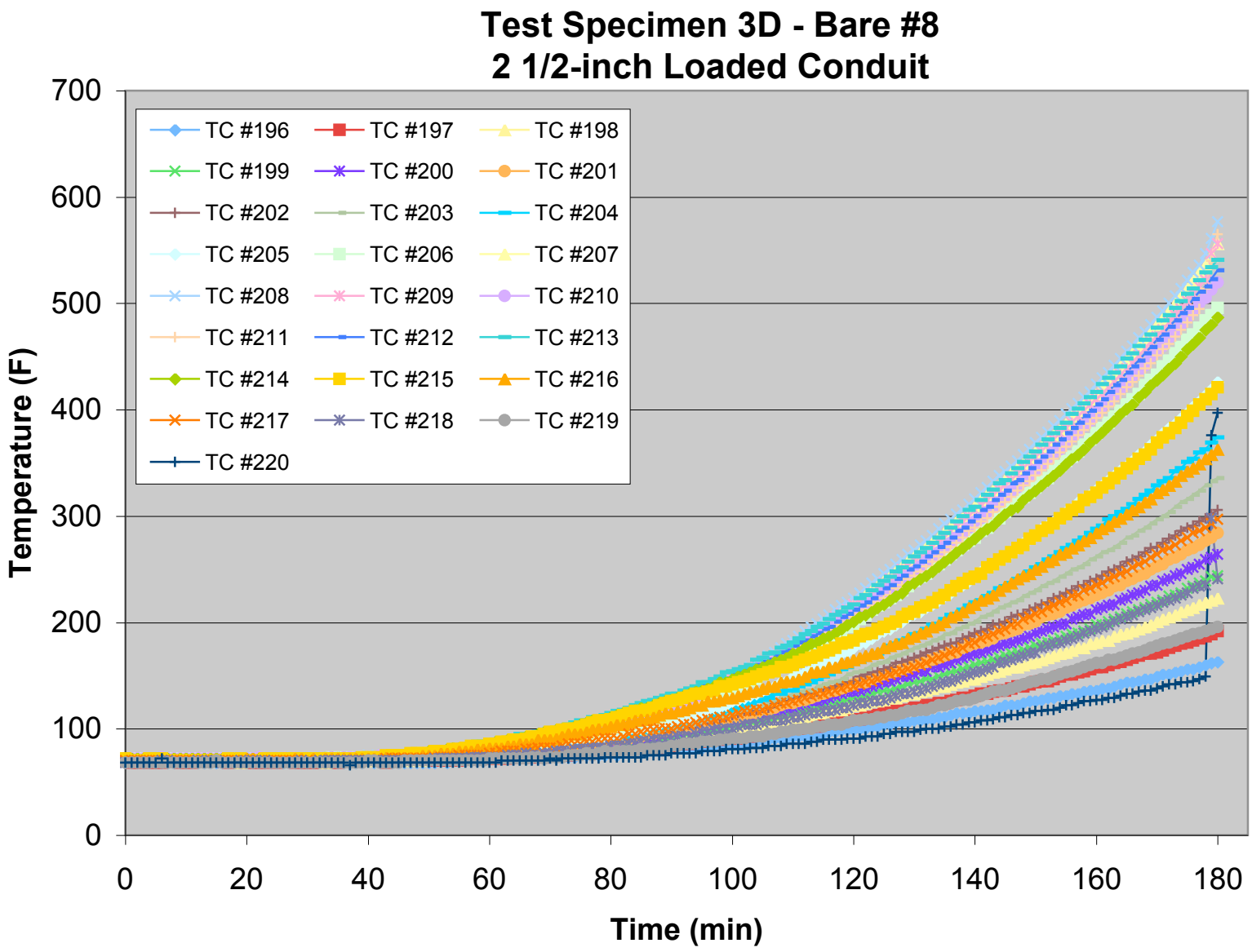
Test Specimen 3D - Bare #8
2 1/2-inch Loaded Conduit
Temperature (F)
Time (min)
0
100
200
300
400
500
600
700
0
20
40
60
80
100
120
140
160
180
TC #196
TC #197
TC #198
TC #199
TC #200
TC #201
TC #202
TC #203
TC #204
TC #205
TC #206
TC #207
TC #208
TC #209
TC #210
TC #211
TC #212
TC #213
TC #214
TC #215
TC #216
TC #217
TC #218
TC #219
TC #220

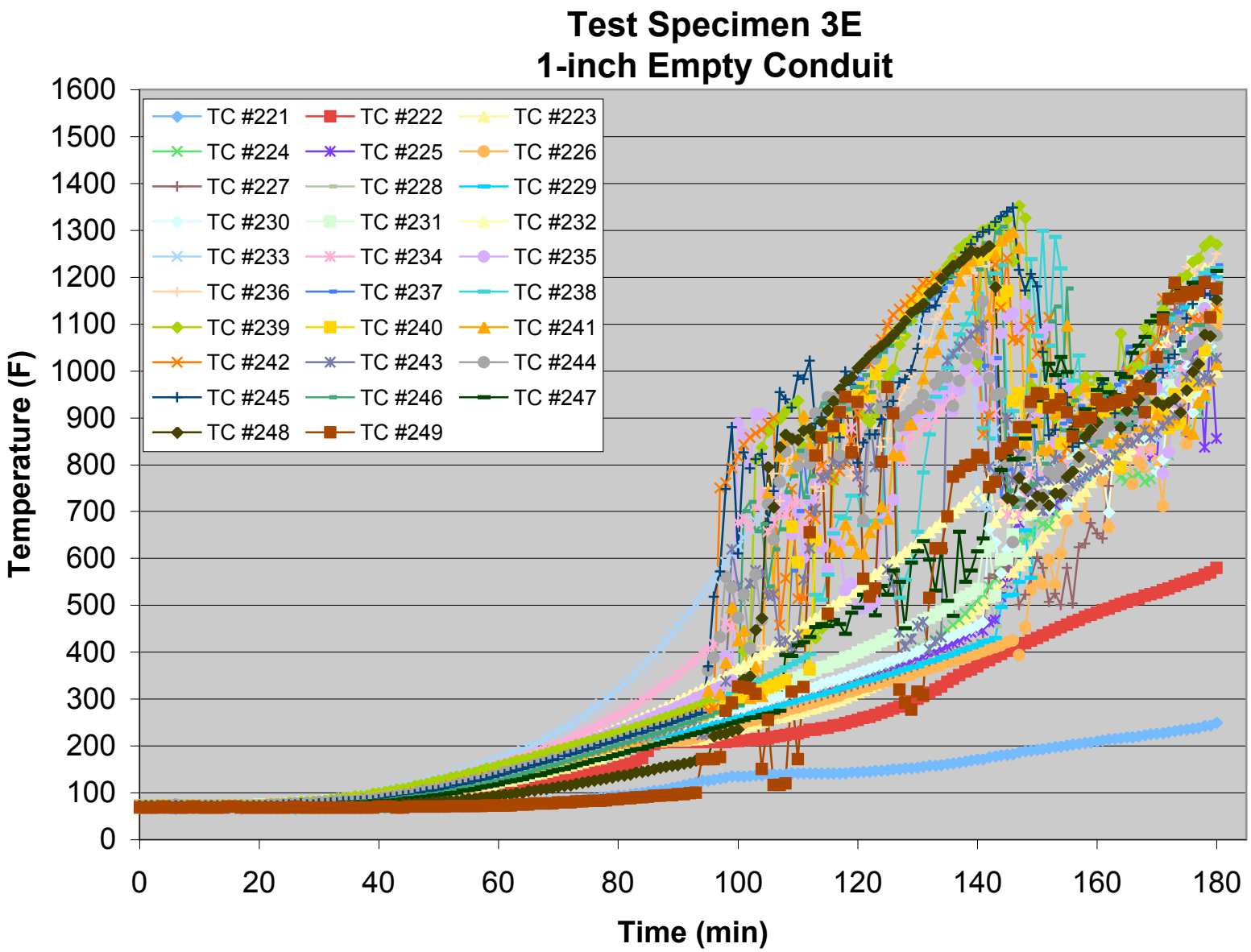
Test Specimen 3E
1-inch Empty Conduit
Temperature (F)
Time (min)
0
100
200
300
400
500
600
700
800
900
1000
1100
1200
1300
1400
1500
1600
0
20
40
60
80
100
120
140
160
180
TC #221
TC #222
TC #223
TC #224
TC #225
TC #226
TC #227
TC #228
TC #229
TC #230
TC #231
TC #232
TC #233
TC #234
TC #235
TC #236
TC #237
TC #238
TC #239
TC #240
TC #241
TC #242
TC #243
TC #244
TC #245
TC #246
TC #247
TC #248
TC #249

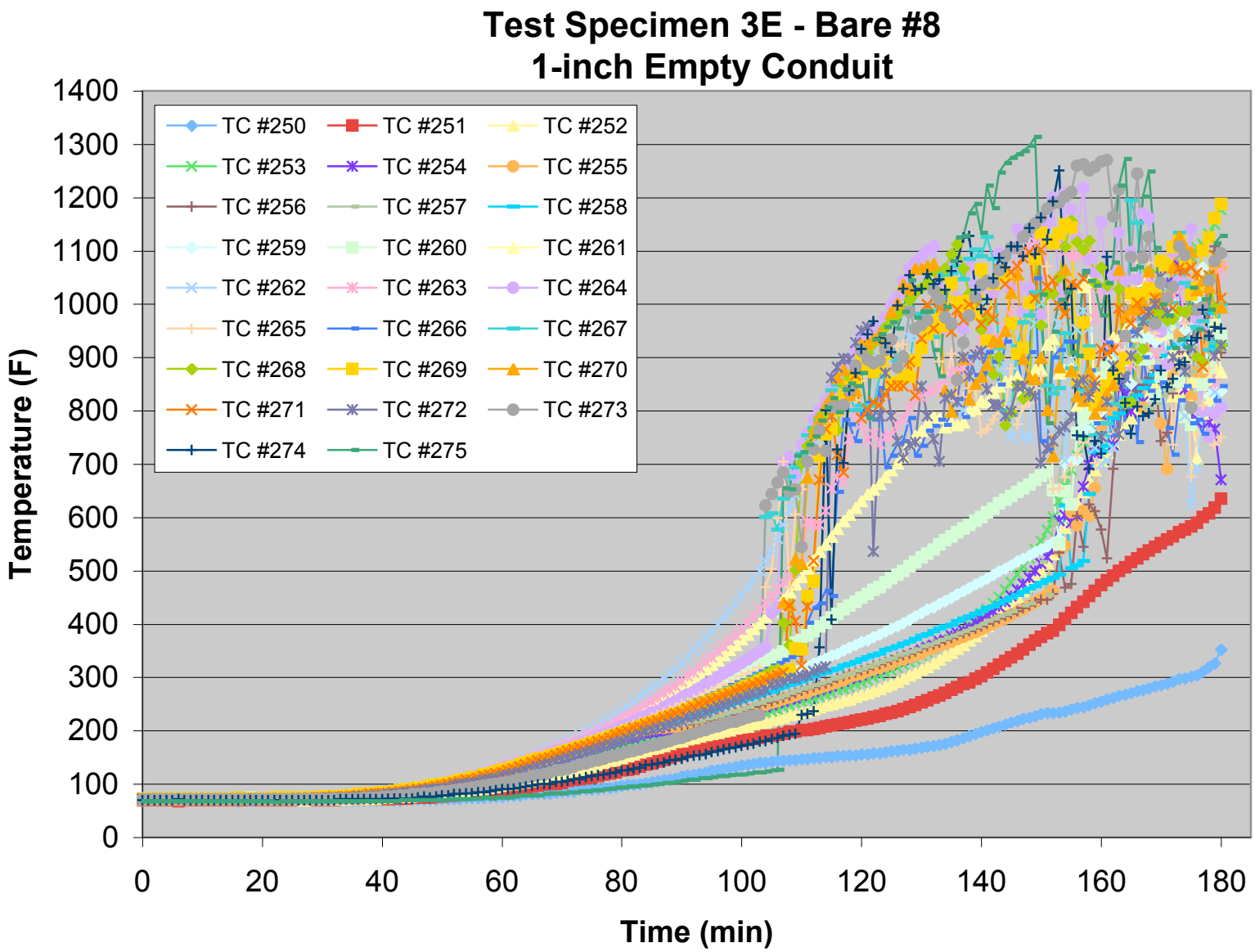
Test Specimen 3E - Bare #8
1-inch Empty Conduit
Temperature (F)
Time (min)
0
100
200
300
400
500
600
700
800
900
1000
1100
1200
1300
1400
0
20
40
60
80
100
120
140
160
180
TC #250
TC #251
TC #252
TC #253
TC #254
TC #255
TC #256
TC #257
TC #258
TC #259
TC #260
TC #261
TC #262
TC #263
TC #264
TC #265
TC #266
TC #267
TC #268
TC #269
TC #270
TC #271
TC #272
TC #273
TC #274
TC #275

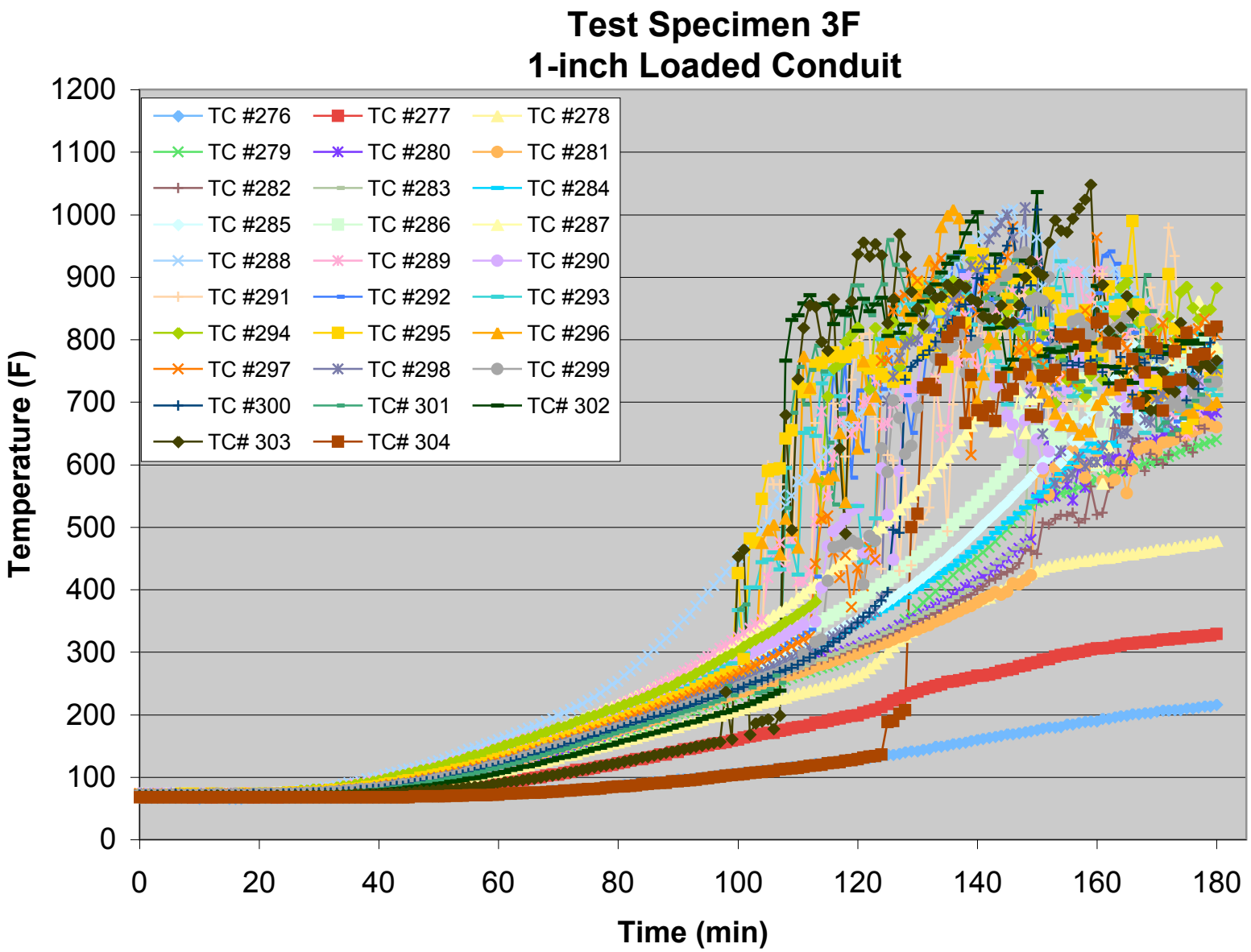
Test Specimen 3F
1-inch Loaded Conduit
Temperature (F)
Time (min)
0
100
200
300
400
500
600
700
800
900
1000
1100
1200
0
20
40
60
80
100
120
140
160
180
TC #276
TC #277
TC #278
TC #279
TC #280
TC #281
TC #282
TC #283
TC #284
TC #285
TC #286
TC #287
TC #288
TC #289
TC #290
TC #291
TC #292
TC #293
TC #294
TC #295
TC #296
TC #297
TC #298
TC #299
TC #300
TC# 301
TC# 302
TC# 303
TC# 304

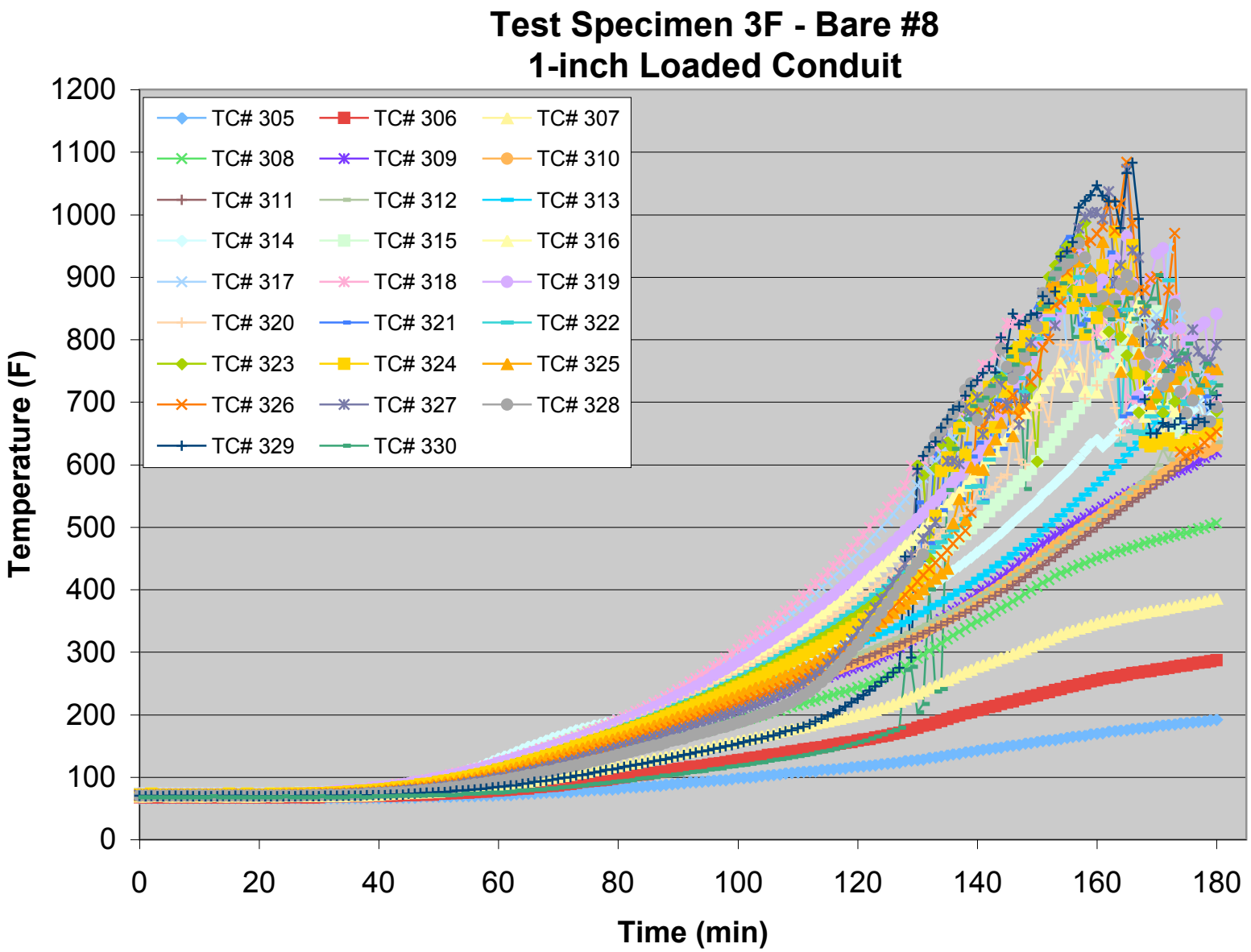
Test Specimen 3F - Bare #8
1-inch Loaded Conduit
Temperature (F)
Time (min)
0
100
200
300
400
500
600
700
800
900
1000
1100
1200
0
20
40
60
80
100
120
140
160
180
TC# 305
TC# 306
TC# 307
TC# 308
TC# 309
TC# 310
TC# 311
TC# 312
TC# 313
TC# 314
TC# 315
TC# 316
TC# 317
TC# 318
TC# 319
TC# 320
TC# 321
TC# 322
TC# 323
TC# 324
TC# 325
TC# 326
TC# 327
TC# 328
TC# 329
TC# 330

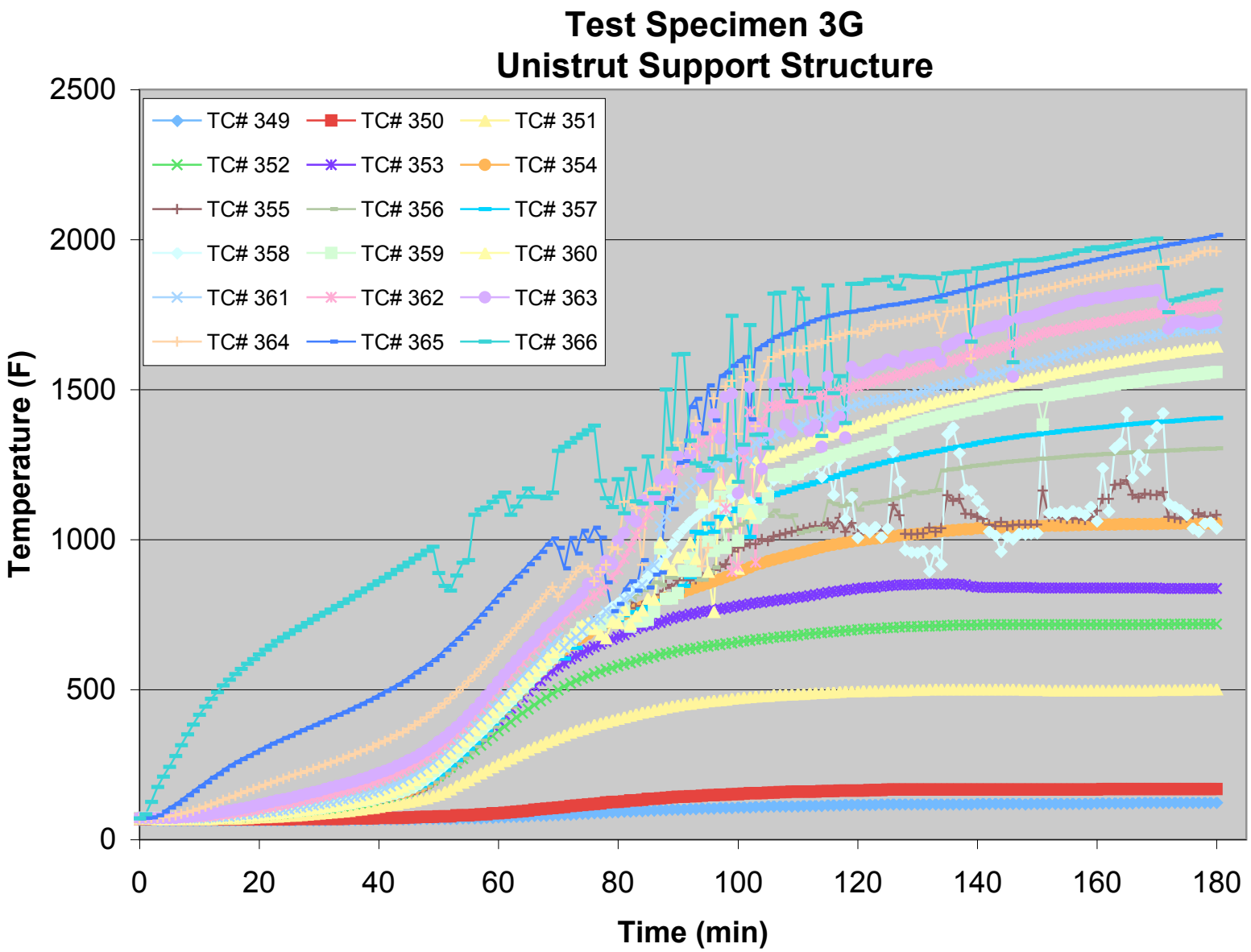
Test Specimen 3G
Unistrut Support Structure
TC# 349
TC# 350
TC# 351
TC# 352
TC# 353
TC# 354
TC# 355
TC# 356
TC# 357
TC# 358
TC# 359
TC# 360
TC# 361
TC# 362
TC# 363
TC# 364
TC# 365
TC# 366
Temperature (F)
2500
2000
1500
1000
500
0
0
20
40
60
80
100
120
140
160
180
Time (min)

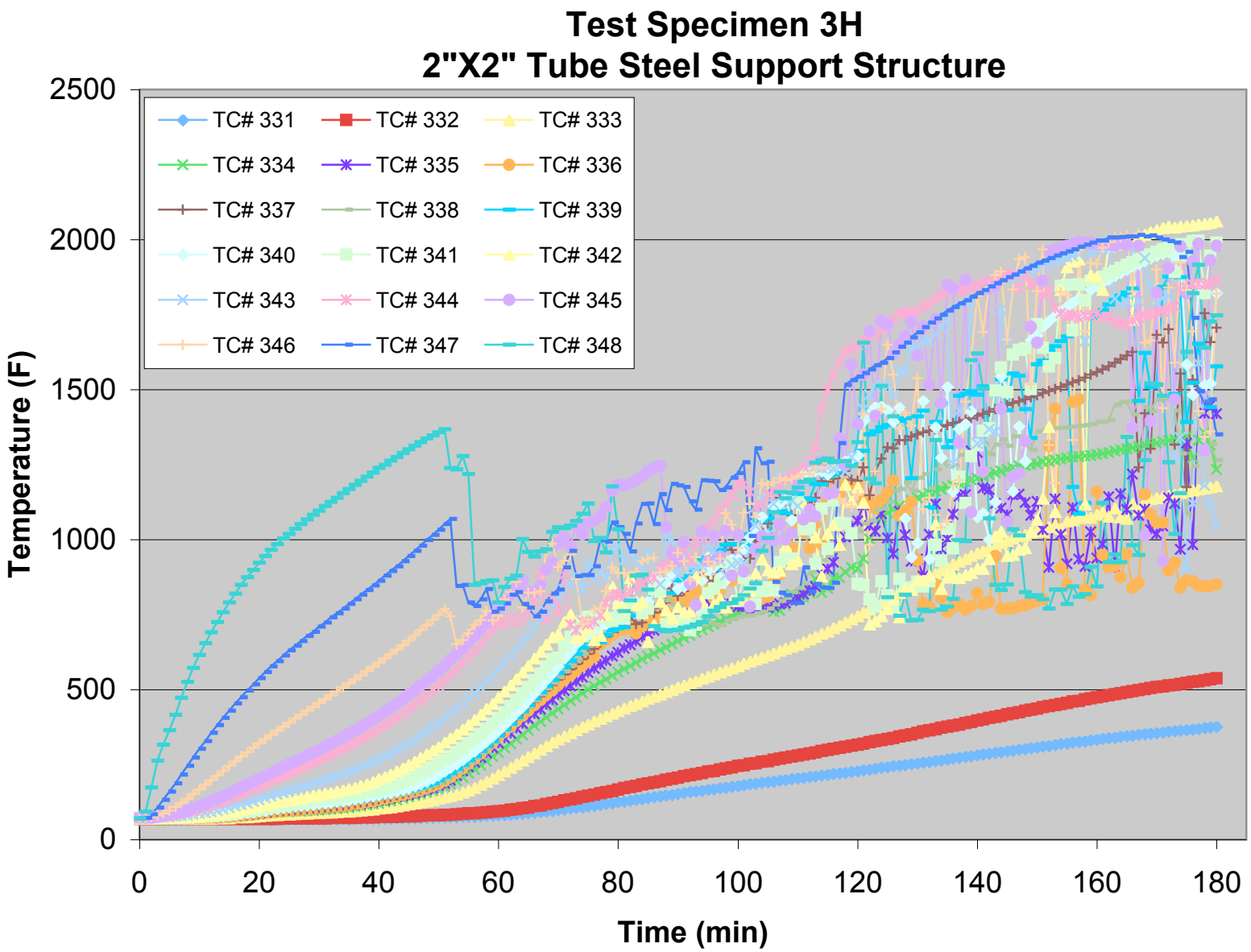
Test Specimen 3H
2"X2" Tube Steel Support Structure
TC# 331
TC# 332
TC# 333
TC# 334
TC# 335
TC# 336
TC# 337
TC# 338
TC# 339
TC# 340
TC# 341
TC# 342
TC# 343
TC# 344
TC# 345
TC# 346
TC# 347
TC# 348
Temperature (F)
2500
2000
1500
1000
500
0
0
20
40
60
80
100
120
140
160
180
Time (min)

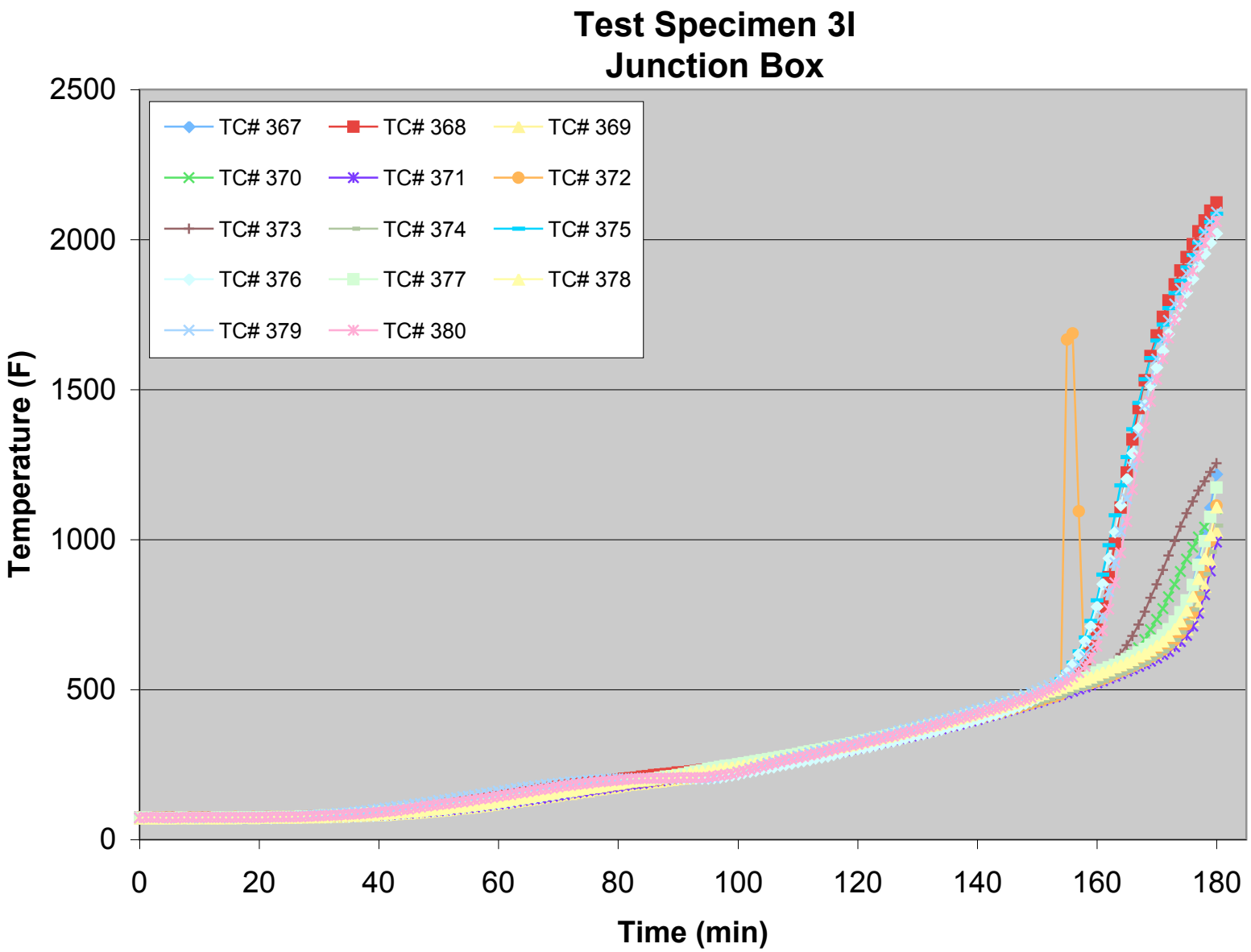
Test Specimen 3I
Junction Box
TC# 367
TC# 368
TC# 369
TC# 370
TC# 371
TC# 372
TC# 373
TC# 374
TC# 375
TC# 376
TC# 377
TC# 378
TC# 379
TC# 380
Temperature (F)
2500
2000
1500
1000
500
0
0
20
40
60
80
100
120
140
160
180
Time (min)

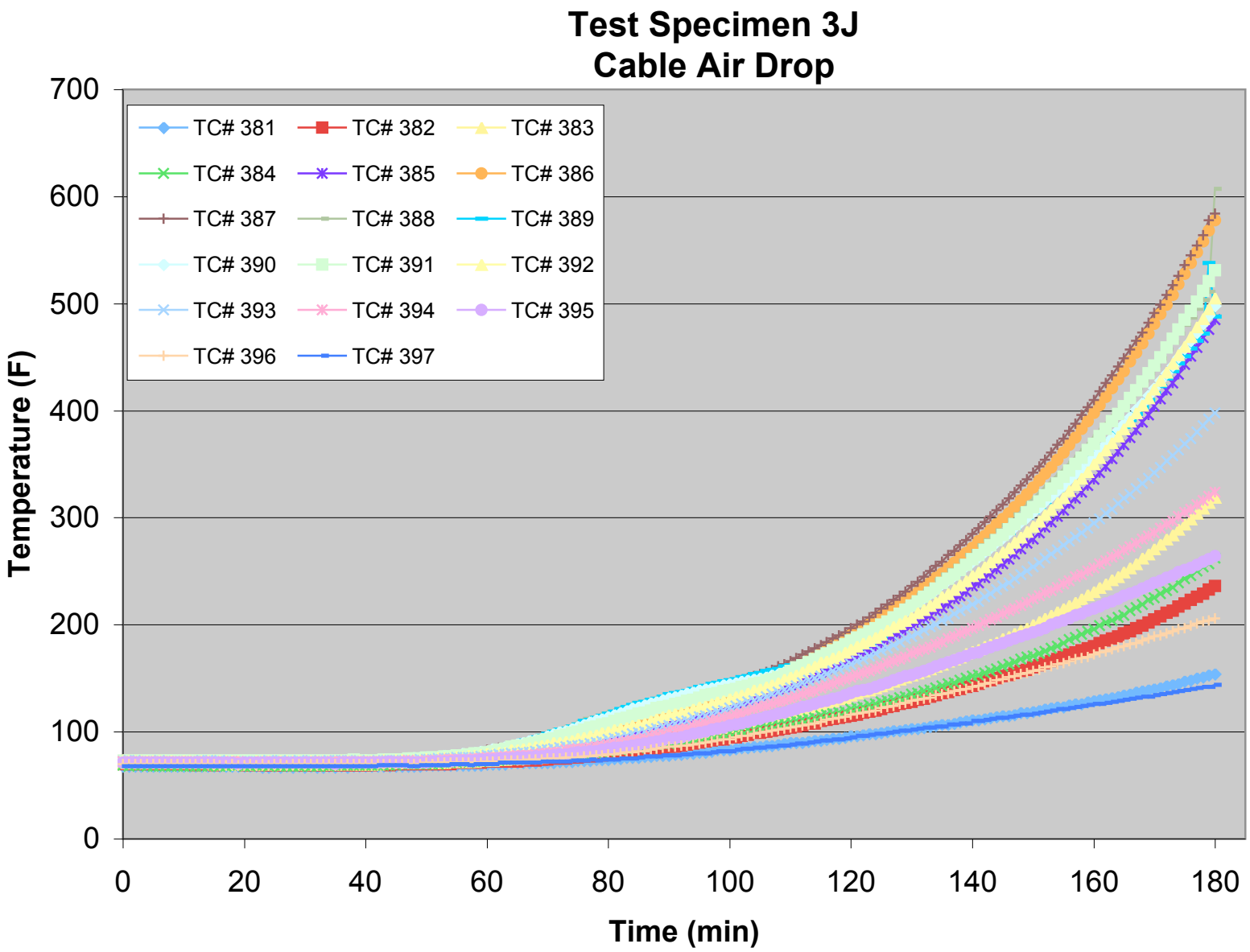
Test Specimen 3J
Cable Air Drop
TC# 381
TC# 382
TC# 383
TC# 384
TC# 385
TC# 386
TC# 387
TC# 388
TC# 389
TC# 390
TC# 391
TC# 392
TC# 393
TC# 394
TC# 395
TC# 396
TC# 397
Temperature (F)
0
100
200
300
400
500
600
700
Time (min)
0
20
40
60
80
100
120
140
160
180

Time (min)	Item 3A Empty 4" Conduit Steel Min (°F)	Item 3A Empty 4" Conduit Steel Avg (°F)	Item 3A Empty 4" Conduit Steel Max (°F)	Item 3A Empty 4" Conduit Bare #8 Min (°F)	Item 3A Empty 4" Conduit Bare #8 Avg (°F)	Item 3A Empty 4" Conduit Bare #8 Max (°F)	Item 3B Loaded 4" Conduit Steel Min (°F)
0	68	72	73	68	72	73	68
1	68	72	73	68	72	73	68
2	68	72	73	68	72	73	68
3	68	72	73	68	72	73	68
4	68	72	73	68	72	73	68
5	68	72	73	68	72	73	68
6	68	72	73	68	72	73	68
7	68	72	73	68	72	73	68
8	68	72	73	68	72	73	68
9	68	72	73	68	72	73	68
10	68	72	73	68	72	73	68
11	68	72	73	68	72	73	68
12	68	72	73	68	72	73	68
13	68	72	73	68	72	73	68
14	68	72	73	68	72	73	68
15	68	72	73	68	72	73	68
16	68	72	73	68	72	73	68
17	68	72	73	68	72	73	68
18	68	72	73	68	72	73	68
19	68	72	73	68	72	73	68
20	68	72	75	68	72	73	68
21	68	72	75	66	72	75	68
22	68	72	75	68	72	73	68
23	68	73	77	68	72	73	68
24	68	73	77	68	72	73	68
25	68	73	77	68	72	75	68
26	68	73	77	68	72	75	68
27	68	73	79	68	72	75	68
28	68	74	79	68	72	75	68
29	68	74	81	68	72	75	68
30	68	74	81	68	72	75	68
31	68	74	82	68	72	75	68
32	68	75	84	68	73	77	68
33	68	75	84	68	73	77	68
34	68	75	84	68	73	77	68
35	68	76	86	68	73	77	68
36	68	77	88	68	74	77	68
37	68	77	90	68	74	79	68
38	68	77	91	68	74	79	68
39	68	78	91	68	74	81	68
40	68	79	93	68	75	81	68
41	68	79	95	68	75	81	68

Time (min)	Item 3A Empty 4" Conduit Steel Min (°F)	Item 3A Empty 4" Conduit Steel Avg (°F)	Item 3A Empty 4" Conduit Steel Max (°F)	Item 3A Empty 4" Conduit Bare #8 Min (°F)	Item 3A Empty 4" Conduit Bare #8 Avg (°F)	Item 3A Empty 4" Conduit Bare #8 Max (°F)	Item 3B Loaded 4" Conduit Steel Min (°F)
42	68	80	97	68	75	82	68
43	68	81	100	68	76	82	68
44	68	81	100	68	76	84	68
45	70	82	104	68	77	84	68
46	68	83	106	68	78	86	68
47	68	84	108	68	78	86	68
48	68	85	109	68	79	88	68
49	70	86	111	68	79	90	68
50	70	87	115	70	80	90	68
51	70	88	117	70	80	91	68
52	70	89	118	70	81	93	68
53	70	91	122	70	82	95	68
54	70	92	124	70	83	95	70
55	70	93	126	70	84	97	68
56	70	94	129	70	85	99	68
57	70	96	131	70	85	100	70
58	70	97	135	72	87	102	70
59	72	99	136	72	87	104	70
60	70	100	140	72	89	106	70
61	72	101	142	72	90	108	70
62	72	103	144	72	91	109	70
63	72	105	147	73	92	111	70
64	72	106	149	72	93	113	70
65	72	108	153	72	94	115	70
66	73	109	154	73	96	118	72
67	73	111	158	73	97	120	70
68	72	113	160	73	99	122	72
69	73	114	162	73	100	124	72
70	73	116	165	73	102	126	72
71	73	118	167	75	103	129	72
72	73	120	171	75	105	131	72
73	73	122	172	75	106	133	72
74	75	124	176	75	108	136	72
75	75	126	178	77	110	138	73
76	75	128	181	77	111	140	73
77	75	130	183	77	113	144	73
78	77	132	185	77	115	145	73
79	77	134	189	79	117	149	73
80	77	136	190	79	119	151	73
81	79	138	192	79	120	154	73
82	79	140	194	81	122	158	75
83	79	142	198	81	124	160	75

Time (min)	Item 3A Empty 4" Conduit Steel Min (°F)	Item 3A Empty 4" Conduit Steel Avg (°F)	Item 3A Empty 4" Conduit Steel Max (°F)	Item 3A Empty 4" Conduit Bare #8 Min (°F)	Item 3A Empty 4" Conduit Bare #8 Avg (°F)	Item 3A Empty 4" Conduit Bare #8 Max (°F)	Item 3B Loaded 4" Conduit Steel Min (°F)
84	79	145	201	81	126	162	75
85	79	147	203	82	128	165	75
86	81	149	205	82	130	169	75
87	82	151	208	82	132	171	77
88	82	154	210	84	134	174	77
89	82	156	216	84	136	178	77
90	84	158	221	84	138	181	77
91	82	160	226	86	140	183	77
92	84	162	230	86	143	187	77
93	84	165	237	86	145	190	79
94	86	167	243	86	147	194	79
95	86	169	250	88	149	198	79
96	86	172	255	88	151	203	79
97	88	174	262	90	154	207	81
98	90	176	270	90	156	212	81
99	90	178	277	90	158	216	81
100	90	181	284	91	161	221	81
101	90	184	293	91	163	226	82
102	91	186	300	91	165	230	82
103	91	189	307	93	168	235	82
104	91	192	315	93	170	241	82
105	93	194	324	93	173	248	82
106	95	197	331	95	176	253	84
107	95	200	340	95	178	259	84
108	97	202	347	97	181	264	84
109	97	205	356	97	183	270	84
110	99	224	**423**	97	186	277	86
111	99	243	**590**	99	189	282	86
112	99	255	**649**	99	191	288	86
113	100	270	**694**	100	194	295	86
114	100	251	**703**	100	197	300	86
115	102	270	**691**	102	199	307	88
116	104	281	**696**	102	202	315	88
117	104	283	**739**	102	205	320	90
118	106	287	**725**	104	208	327	90
119	106	297	**777**	104	211	334	90
120	108	308	**784**	104	214	342	90
121	108	**336**	**797**	106	217	349	90
122	109	**345**	**810**	108	220	354	91
123	109	**350**	**815**	108	223	361	91
124	111	**329**	**822**	108	226	369	93
125	113	**353**	**799**	109	229	376	93

Time (min)	Item 3A Empty 4" Conduit Steel Min (°F)	Item 3A Empty 4" Conduit Steel Avg (°F)	Item 3A Empty 4" Conduit Steel Max (°F)	Item 3A Empty 4" Conduit Bare #8 Min (°F)	Item 3A Empty 4" Conduit Bare #8 Avg (°F)	Item 3A Empty 4" Conduit Bare #8 Max (°F)	Item 3B Loaded 4" Conduit Steel Min (°F)
126	113	**350**	**792**	109	232	383	93
127	115	**346**	**795**	111	235	392	93
128	115	**379**	**732**	111	238	**399**	93
129	117	**397**	**738**	113	242	**406**	95
130	117	**402**	**788**	113	245	**415**	95
131	118	**402**	**826**	113	248	**423**	95
132	118	**397**	**837**	115	251	**430**	97
133	120	**422**	**844**	115	255	**439**	97
134	120	**402**	**851**	117	258	**448**	97
135	122	**448**	**860**	117	262	**455**	99
136	122	**423**	**869**	118	265	**464**	99
137	124	**427**	**873**	118	269	**471**	100
138	124	**400**	**878**	120	273	**480**	100
139	126	**436**	**885**	120	276	**489**	100
140	126	**450**	**887**	122	280	**496**	100
141	127	**454**	**900**	122	283	**505**	102
142	129	**481**	**903**	124	287	**514**	102
143	129	**481**	**903**	124	291	**523**	104
144	129	**526**	**896**	124	294	**532**	104
145	133	**531**	**889**	124	298	**540**	104
146	131	**528**	**878**	124	302	**549**	106
147	135	**532**	**916**	126	306	**558**	106
148	135	**536**	**871**	124	**332**	**567**	106
149	136	**560**	**912**	126	**335**	**577**	108
150	136	**560**	**885**	126	**318**	**586**	108
151	136	**580**	**880**	126	**339**	**597**	109
152	138	**571**	**883**	127	**330**	**608**	109
153	138	**565**	**896**	145	**339**	**617**	109
154	140	**552**	**898**	147	**350**	**628**	111
155	140	**589**	**905**	147	**365**	**633**	111
156	142	**589**	**907**	147	**394**	**680**	111
157	142	**600**	**919**	142	**398**	**723**	113
158	144	**611**	**921**	151	**418**	**676**	113
159	144	**617**	**934**	151	**439**	**748**	115
160	144	**617**	**925**	151	**455**	**721**	115
161	145	**623**	**977**	153	**455**	**712**	115
162	145	**632**	**991**	154	**468**	**720**	115
163	147	**640**	**997**	154	**484**	**801**	117
164	147	**640**	**1008**	154	**496**	**784**	117
165	149	**640**	**1033**	156	**524**	**824**	118
166	149	**650**	**1027**	158	**531**	**835**	118
167	151	**670**	**1029**	158	**521**	**846**	118

Time (min)	Item 3A Empty 4" Conduit Steel Min (°F)	Item 3A Empty 4" Conduit Steel Avg (°F)	Item 3A Empty 4" Conduit Steel Max (°F)	Item 3A Empty 4" Conduit Bare #8 Min (°F)	Item 3A Empty 4" Conduit Bare #8 Avg (°F)	Item 3A Empty 4" Conduit Bare #8 Max (°F)	Item 3B Loaded 4" Conduit Steel Min (°F)
168	151	**676**	**1047**	160	**512**	**829**	120
169	153	**681**	**1015**	160	**548**	**838**	120
170	153	**688**	**1031**	162	**550**	**849**	120
171	154	**694**	**1045**	163	**553**	**882**	122
172	154	**683**	**1051**	163	**567**	**878**	122
173	156	**686**	**1054**	165	**580**	**892**	122
174	158	**703**	**1058**	167	**579**	**900**	124
175	158	**714**	**1058**	167	**574**	**901**	124
176	158	**710**	**1062**	169	**568**	**912**	124
177	160	**714**	**1065**	171	**601**	**943**	126
178	162	**720**	**1067**	172	**595**	**939**	126
179	162	**725**	**1083**	172	**612**	**950**	126
180	163	**728**	**1092**	174	**629**	**961**	127
Max Temp:		728	1092		629	961	
Max Allowed:		322	398		322	398	

Time (min)	Item 3B Loaded 4" Conduit Steel Avg (°F)	Item 3B Loaded 4" Conduit Steel Max (°F)	Item 3B Loaded 4" Conduit Bare #8 Min (°F)	Item 3B Loaded 4" Conduit Bare #8 Avg (°F)	Item 3B Loaded 4" Conduit Bare #8 Max (°F)	Item 3C Empty 2-1/2" Conduit Steel Min (°F)
0	71	72	68	71	72	68
1	71	72	68	71	72	68
2	71	72	68	71	72	68
3	71	72	68	71	72	68
4	71	72	68	71	72	68
5	71	72	68	71	72	68
6	71	72	68	71	72	68
7	71	72	68	71	72	68
8	71	73	68	71	73	68
9	71	72	68	71	72	66
10	71	72	68	71	72	68
11	71	72	68	71	72	68
12	71	72	68	71	72	68
13	71	72	68	71	72	68
14	71	73	68	71	72	66
15	71	73	68	71	72	66
16	72	73	68	71	72	68
17	71	73	68	71	72	68
18	71	73	68	71	72	66
19	71	73	68	71	72	68
20	72	75	68	71	72	68
21	72	77	68	71	72	68
22	72	77	68	71	72	66
23	72	79	68	71	72	66
24	72	81	68	71	72	68
25	72	81	68	71	72	66
26	73	82	68	71	73	68
27	73	84	68	71	72	66
28	73	86	68	71	73	66
29	73	86	68	71	72	66
30	73	88	68	71	72	68
31	74	90	68	71	72	66
32	74	93	68	71	73	68
33	74	93	68	71	73	68
34	75	97	68	71	73	68
35	75	99	68	71	73	68
36	76	100	68	71	73	68
37	76	102	68	71	73	66
38	76	106	68	71	73	68
39	77	108	68	71	73	68
40	78	111	68	71	73	68
41	79	113	68	71	75	68

Time (min)	Item 3B Loaded 4" Conduit Steel Avg (°F)	Item 3B Loaded 4" Conduit Steel Max (°F)	Item 3B Loaded 4" Conduit Bare #8 Min (°F)	Item 3B Loaded 4" Conduit Bare #8 Avg (°F)	Item 3B Loaded 4" Conduit Bare #8 Max (°F)	Item 3C Empty 2-1/2" Conduit Steel Min (°F)
42	79	117	68	72	75	68
43	80	118	68	72	75	68
44	80	122	68	72	75	68
45	81	126	68	72	75	68
46	82	127	68	72	75	68
47	83	131	68	72	77	68
48	84	135	68	72	77	68
49	84	136	68	72	77	68
50	85	140	68	72	77	68
51	86	144	68	73	77	68
52	87	147	68	73	79	70
53	88	149	68	73	79	68
54	89	153	68	73	79	70
55	90	156	68	74	79	70
56	91	158	68	74	81	70
57	92	162	68	74	81	70
58	93	165	68	74	81	70
59	94	167	68	75	82	70
60	95	171	68	75	82	70
61	96	172	68	75	82	70
62	97	176	68	76	84	70
63	99	176	68	76	84	72
64	100	180	68	76	84	72
65	101	181	68	77	86	72
66	102	185	68	77	86	72
67	103	187	70	77	88	72
68	105	189	70	78	88	73
69	106	192	70	78	90	73
70	107	194	70	79	90	73
71	109	196	70	79	90	73
72	110	198	70	80	91	73
73	111	201	70	80	91	75
74	113	203	72	81	91	75
75	114	205	70	82	93	75
76	115	208	70	82	95	75
77	117	208	70	82	95	77
78	118	212	70	83	97	77
79	120	214	70	84	97	77
80	121	216	70	85	99	77
81	122	217	72	85	100	77
82	123	219	70	86	100	79
83	125	223	72	86	100	79

Time (min)	Item 3B Loaded 4" Conduit Steel Avg (°F)	Item 3B Loaded 4" Conduit Steel Max (°F)	Item 3B Loaded 4" Conduit Bare #8 Min (°F)	Item 3B Loaded 4" Conduit Bare #8 Avg (°F)	Item 3B Loaded 4" Conduit Bare #8 Max (°F)	Item 3C Empty 2-1/2" Conduit Steel Min (°F)
84	126	225	72	87	102	79
85	128	226	70	87	104	81
86	129	228	72	89	106	81
87	131	230	72	89	106	81
88	133	234	72	90	108	82
89	134	234	73	91	109	82
90	135	237	73	92	109	82
91	137	239	73	92	111	82
92	138	241	73	93	113	84
93	140	243	73	94	113	84
94	141	246	73	95	115	86
95	143	248	73	96	117	86
96	145	250	75	97	117	86
97	146	252	75	97	118	88
98	148	255	75	98	120	88
99	150	257	75	99	120	88
100	151	259	75	100	122	90
101	153	261	75	101	124	90
102	155	262	77	102	126	90
103	156	266	77	103	126	91
104	158	268	77	104	129	91
105	160	270	77	105	129	93
106	162	271	77	106	131	93
107	163	275	77	107	133	95
108	165	279	79	108	135	95
109	167	280	79	109	136	95
110	169	284	79	110	138	97
111	171	286	79	111	140	99
112	173	288	79	112	140	99
113	187	**689**	81	114	144	99
114	190	**700**	81	115	145	100
115	192	**711**	81	116	147	100
116	194	**723**	81	117	147	100
117	196	**730**	81	118	149	102
118	199	**741**	82	119	151	102
119	201	**748**	82	121	153	104
120	203	**756**	82	122	156	104
121	206	**763**	82	123	156	106
122	208	**768**	84	125	160	106
123	210	**772**	84	126	162	108
124	212	**779**	84	127	163	108
125	215	**784**	84	129	165	109

Time (min)	Item 3B Loaded 4" Conduit Steel Avg (°F)	Item 3B Loaded 4" Conduit Steel Max (°F)	Item 3B Loaded 4" Conduit Bare #8 Min (°F)	Item 3B Loaded 4" Conduit Bare #8 Avg (°F)	Item 3B Loaded 4" Conduit Bare #8 Max (°F)	Item 3C Empty 2-1/2" Conduit Steel Min (°F)
126	217	**784**	86	130	167	111
127	236	**786**	86	132	169	111
128	239	**792**	86	133	172	111
129	242	**795**	88	135	174	113
130	231	**799**	88	136	176	113
131	246	**802**	88	138	180	115
132	240	**806**	90	140	181	115
133	236	**806**	90	141	185	117
134	241	**806**	90	143	187	117
135	253	**806**	91	144	190	118
136	263	**810**	91	146	192	118
137	277	**806**	91	148	196	120
138	280	**793**	93	150	199	120
139	284	**784**	93	151	201	122
140	286	**802**	93	153	205	122
141	288	**808**	93	155	208	124
142	309	**813**	95	157	212	126
143	**330**	**810**	95	159	214	126
144	**335**	**810**	97	161	217	127
145	**331**	**806**	97	163	221	127
146	**348**	**810**	97	165	225	129
147	**356**	**801**	99	167	228	129
148	**374**	**801**	99	169	232	131
149	**371**	**811**	100	171	235	131
150	**378**	**811**	100	174	239	133
151	**378**	**811**	100	176	243	133
152	**394**	**822**	102	178	246	135
153	**405**	**828**	102	181	250	135
154	**396**	**829**	104	183	253	136
155	**382**	**795**	104	185	259	136
156	**385**	**792**	106	188	262	138
157	**415**	**806**	106	190	266	140
158	**442**	**831**	108	193	270	140
159	**437**	**810**	108	195	275	140
160	**439**	**811**	109	198	279	142
161	**454**	**810**	111	200	284	144
162	**450**	**804**	111	203	288	144
163	**453**	**797**	113	206	291	145
164	**480**	**874**	113	209	297	145
165	**489**	**923**	115	211	300	147
166	**495**	**945**	115	214	306	147
167	**487**	**959**	117	217	309	149

Time (min)	Item 3B Loaded 4" Conduit Steel Avg (°F)	Item 3B Loaded 4" Conduit Steel Max (°F)	Item 3B Loaded 4" Conduit Bare #8 Min (°F)	Item 3B Loaded 4" Conduit Bare #8 Avg (°F)	Item 3B Loaded 4" Conduit Bare #8 Max (°F)	Item 3C Empty 2-1/2" Conduit Steel Min (°F)
168	**497**	**997**	118	220	315	149
169	**511**	**959**	118	223	320	151
170	**518**	**1008**	120	226	324	151
171	**519**	**880**	120	229	329	153
172	**525**	**874**	122	232	334	154
173	**535**	**842**	122	235	338	154
174	**543**	**849**	124	238	343	156
175	**540**	**916**	126	241	349	156
176	**549**	**846**	126	244	354	158
177	**550**	**862**	127	248	360	158
178	**557**	**957**	129	251	363	160
179	**573**	**937**	129	254	369	160
180	**575**	**934**	131	258	374	162
Max Temp:	575	1008		258	374	
Max Allowed:	321	397		321	397	

Time (min)	Item 3C Empty 2-1/2" Conduit Steel Avg (°F)	Item 3C Empty 2-1/2" Conduit Steel Max (°F)	Item 3C Empty 2-1/2" Conduit Bare #8 Min (°F)	Item 3C Empty 2-1/2" Conduit Bare #8 Avg (°F)	Item 3C Empty 2-1/2" Conduit Bare #8 Max (°F)
0	72	73	68	72	73
1	72	73	68	72	73
2	72	73	68	72	73
3	72	73	68	72	73
4	72	73	68	72	73
5	72	73	68	72	73
6	72	73	68	72	75
7	72	73	68	72	73
8	72	73	68	72	73
9	72	73	68	72	73
10	72	73	68	72	73
11	72	73	68	72	73
12	72	73	68	72	73
13	72	73	68	72	73
14	72	75	68	72	75
15	72	75	68	72	73
16	72	75	66	72	73
17	72	73	68	72	73
18	72	73	68	72	75
19	72	75	68	72	75
20	72	75	68	72	73
21	73	75	66	72	75
22	73	75	68	72	75
23	73	75	68	72	75
24	73	75	68	72	75
25	73	75	68	72	73
26	73	77	68	73	75
27	73	77	68	73	77
28	74	77	68	73	75
29	74	77	68	73	75
30	74	77	68	73	75
31	75	79	68	73	77
32	75	81	68	73	77
33	75	81	68	74	77
34	76	82	68	74	77
35	76	82	68	74	77
36	77	82	68	74	79
37	78	84	68	74	79
38	78	86	68	75	81
39	79	88	68	76	81
40	79	88	68	76	81
41	80	90	68	76	82

Time (min)	Item 3C Empty 2-1/2" Conduit Steel Avg (°F)	Item 3C Empty 2-1/2" Conduit Steel Max (°F)	Item 3C Empty 2-1/2" Conduit Bare #8 Min (°F)	Item 3C Empty 2-1/2" Conduit Bare #8 Avg (°F)	Item 3C Empty 2-1/2" Conduit Bare #8 Max (°F)
42	81	91	68	77	82
43	82	93	68	77	84
44	83	95	68	78	84
45	83	97	68	79	86
46	84	99	68	79	86
47	85	100	68	80	88
48	86	102	68	81	90
49	87	104	68	81	91
50	89	106	68	82	91
51	90	108	70	84	93
52	91	111	70	84	95
53	93	113	68	85	97
54	94	115	70	86	99
55	96	118	70	87	100
56	97	120	70	89	102
57	99	122	70	90	106
58	100	126	70	91	106
59	102	127	70	92	109
60	103	129	72	94	111
61	105	133	72	95	113
62	107	136	72	96	115
63	109	138	72	98	118
64	111	140	72	100	120
65	112	144	72	101	122
66	114	147	72	103	126
67	116	151	73	105	127
68	118	154	73	106	129
69	120	156	73	108	133
70	122	160	73	110	135
71	124	162	73	112	138
72	127	167	75	114	142
73	129	169	75	115	144
74	131	172	75	118	147
75	133	176	75	119	151
76	136	180	77	122	153
77	138	183	77	123	156
78	140	187	77	126	160
79	142	190	79	127	163
80	145	196	79	130	165
81	147	201	79	132	169
82	149	205	81	134	172
83	152	210	81	136	176

Time (min)	Item 3C Empty 2-1/2" Conduit Steel Avg (°F)	Item 3C Empty 2-1/2" Conduit Steel Max (°F)	Item 3C Empty 2-1/2" Conduit Bare #8 Min (°F)	Item 3C Empty 2-1/2" Conduit Bare #8 Avg (°F)	Item 3C Empty 2-1/2" Conduit Bare #8 Max (°F)
84	154	216	81	139	180
85	156	221	81	141	183
86	159	228	82	144	189
87	162	235	82	146	192
88	165	243	84	148	198
89	167	250	84	151	203
90	170	259	86	153	208
91	173	268	86	156	212
92	176	277	86	159	219
93	178	286	88	161	225
94	182	297	88	164	232
95	185	307	88	167	239
96	187	318	90	170	244
97	191	329	90	173	252
98	194	340	91	176	259
99	197	352	91	179	268
100	200	363	93	182	275
101	203	376	93	185	284
102	207	387	93	189	291
103	210	**399**	95	192	300
104	213	**410**	95	195	309
105	216	**423**	95	199	318
106	220	**433**	97	202	327
107	223	**446**	99	206	336
108	227	**459**	99	209	347
109	230	**471**	100	212	356
110	246	**482**	100	216	365
111	242	**495**	102	220	374
112	240	**505**	102	223	385
113	255	**518**	104	227	394
114	259	**550**	104	230	405
115	282	**615**	106	234	414
116	297	**673**	106	238	424
117	322	**743**	108	241	435
118	310	**689**	108	245	446
119	**366**	**775**	109	249	457
120	**370**	**770**	111	252	468
121	**371**	**804**	111	256	477
122	**398**	**819**	111	260	489
123	**409**	**840**	113	264	500
124	**404**	**837**	115	268	513
125	**442**	**831**	115	272	523

Time (min)	Item 3C Empty 2-1/2" Conduit Steel Avg (°F)	Item 3C Empty 2-1/2" Conduit Steel Max (°F)	Item 3C Empty 2-1/2" Conduit Bare #8 Min (°F)	Item 3C Empty 2-1/2" Conduit Bare #8 Avg (°F)	Item 3C Empty 2-1/2" Conduit Bare #8 Max (°F)
126	**427**	**842**	117	287	606
127	**456**	**860**	117	281	545
128	**459**	**887**	117	300	583
129	**479**	**887**	118	297	565
130	**483**	**878**	120	302	576
131	**490**	**842**	120	296	588
132	**496**	**842**	122	301	599
133	**503**	**844**	124	307	610
134	**509**	**885**	124	328	622
135	**515**	**898**	126	358	631
136	**526**	**889**	126	378	700
137	**526**	**885**	127	377	671
138	**540**	**889**	129	414	703
139	**539**	**878**	129	398	763
140	**559**	**896**	129	398	741
141	**564**	**928**	131	393	738
142	**570**	**910**	133	421	813
143	**591**	**941**	133	432	793
144	**618**	**1006**	135	457	808
145	**624**	**1018**	135	455	802
146	**626**	**1042**	136	476	844
147	**616**	**1058**	136	468	828
148	**626**	**1071**	138	481	833
149	**631**	**1074**	140	504	806
150	**632**	**1078**	142	504	822
151	**637**	**1080**	142	498	837
152	**645**	**1081**	144	528	849
153	**650**	**1083**	144	542	901
154	**658**	**1089**	145	535	880
155	**666**	**1092**	145	560	923
156	**667**	**1098**	147	555	900
157	**665**	**1103**	147	559	896
158	**674**	**1105**	149	563	885
159	**677**	**1099**	151	583	873
160	**686**	**1107**	151	596	934
161	**679**	**1103**	153	619	954
162	**688**	**1098**	153	623	957
163	**701**	**1103**	154	631	948
164	**699**	**1090**	156	646	995
165	**698**	**1080**	156	649	1009
166	**696**	**1044**	158	652	999
167	**703**	**1069**	160	662	1040

Time (min)	Item 3C Empty 2-1/2" Conduit Steel Avg (°F)	Item 3C Empty 2-1/2" Conduit Steel Max (°F)	Item 3C Empty 2-1/2" Conduit Bare #8 Min (°F)	Item 3C Empty 2-1/2" Conduit Bare #8 Avg (°F)	Item 3C Empty 2-1/2" Conduit Bare #8 Max (°F)
168	**702**	**1076**	160	683	1053
169	**716**	**1081**	162	678	1044
170	**714**	**1085**	162	684	1063
171	**714**	**1089**	163	689	1009
172	**701**	**1020**	165	698	1067
173	**712**	**1083**	165	686	1051
174	**720**	**1051**	167	685	1090
175	**724**	**1069**	169	683	1065
176	**711**	**1060**	171	687	1112
177	**710**	**1063**	171	685	1062
178	**734**	**1071**	172	692	1112
179	**718**	**1080**	172	701	1108
180	**730**	**1137**	174	700	1119
Max Temp:	734	1137		701	1119
Max Allowed:	322	398		322	398

Time (min)	Item 3D Loaded 2-1/2" Conduit Steel Min (°F)	Item 3D Loaded 2-1/2" Conduit Steel Avg (°F)	Item 3D Loaded 2-1/2" Conduit Steel Max (°F)	Item 3D Loaded 2-1/2" Conduit Bare #8 Min (°F)	Item 3D Loaded 2-1/2" Conduit Bare #8 Avg (°F)
0	68	71	72	68	71
1	68	71	72	68	71
2	68	71	73	68	71
3	68	71	72	68	71
4	68	71	73	68	71
5	68	71	73	68	71
6	68	71	75	68	71
7	68	71	73	68	71
8	68	71	73	68	71
9	68	71	73	68	71
10	68	71	72	68	71
11	68	71	72	68	71
12	68	71	73	68	71
13	68	71	73	68	71
14	68	71	73	68	71
15	68	71	73	68	71
16	68	71	73	68	71
17	68	71	73	68	71
18	68	72	73	68	71
19	68	71	73	68	71
20	68	71	73	68	71
21	68	71	73	68	71
22	68	72	75	68	71
23	68	72	73	68	71
24	68	72	75	68	71
25	68	72	75	68	71
26	68	72	75	68	71
27	68	72	77	68	71
28	68	73	79	68	71
29	68	73	79	68	71
30	68	73	79	68	71
31	68	73	81	68	71
32	68	74	81	68	71
33	68	74	82	68	71
34	68	74	84	68	71
35	68	75	86	68	71
36	68	75	88	68	72
37	68	75	88	66	71
38	68	76	90	68	71
39	68	77	91	68	72
40	68	77	93	68	72
41	68	78	95	68	72

Time (min)	Item 3D Loaded 2-1/2" Conduit Steel Min (°F)	Item 3D Loaded 2-1/2" Conduit Steel Avg (°F)	Item 3D Loaded 2-1/2" Conduit Steel Max (°F)	Item 3D Loaded 2-1/2" Conduit Bare #8 Min (°F)	Item 3D Loaded 2-1/2" Conduit Bare #8 Avg (°F)
42	68	78	97	68	72
43	68	79	99	68	72
44	68	80	100	68	73
45	68	80	102	68	73
46	68	81	104	68	73
47	68	82	106	68	73
48	68	83	108	68	73
49	68	83	111	68	74
50	68	84	113	68	74
51	68	85	115	68	75
52	68	87	118	68	75
53	68	87	120	68	75
54	68	89	122	68	76
55	68	90	126	68	76
56	68	91	127	68	77
57	70	92	129	68	77
58	68	93	131	68	77
59	70	94	135	68	78
60	70	95	136	68	79
61	70	97	138	68	79
62	70	98	142	70	80
63	70	99	144	70	81
64	70	101	147	70	81
65	70	102	149	70	82
66	70	103	151	70	82
67	72	105	153	70	83
68	72	106	156	70	84
69	72	108	158	70	85
70	72	109	160	72	85
71	72	111	163	70	86
72	72	112	165	72	87
73	72	114	169	72	88
74	72	116	171	72	89
75	73	117	172	72	90
76	73	119	176	72	91
77	73	120	178	72	92
78	73	122	180	72	93
79	73	124	183	73	94
80	75	126	185	73	95
81	75	128	189	73	96
82	75	129	190	73	97
83	75	131	194	73	98

Time (min)	Item 3D Loaded 2-1/2" Conduit Steel Min (°F)	Item 3D Loaded 2-1/2" Conduit Steel Avg (°F)	Item 3D Loaded 2-1/2" Conduit Steel Max (°F)	Item 3D Loaded 2-1/2" Conduit Bare #8 Min (°F)	Item 3D Loaded 2-1/2" Conduit Bare #8 Avg (°F)
84	75	133	198	73	99
85	75	135	199	73	100
86	77	137	203	75	102
87	77	140	207	75	103
88	77	141	214	75	104
89	77	144	221	75	105
90	79	146	230	77	107
91	79	148	237	77	108
92	79	150	244	77	109
93	79	153	253	77	111
94	81	155	262	77	112
95	81	158	270	79	114
96	81	160	279	79	116
97	81	163	286	79	117
98	82	165	295	79	119
99	82	168	302	81	120
100	82	171	311	81	122
101	82	173	318	81	124
102	84	176	327	81	125
103	84	179	334	82	127
104	84	181	342	82	129
105	84	184	349	82	131
106	86	187	358	84	133
107	86	190	365	84	135
108	86	193	372	84	137
109	88	196	379	86	139
110	88	199	387	86	141
111	88	202	394	86	143
112	90	205	**401**	86	145
113	90	208	**408**	88	147
114	90	211	**415**	88	149
115	90	214	**423**	90	152
116	91	217	**430**	90	154
117	91	220	**437**	90	156
118	93	239	**500**	90	159
119	93	244	**516**	91	161
120	93	271	**734**	91	163
121	93	280	**799**	91	166
122	95	274	**806**	93	168
123	95	300	**810**	93	171
124	97	298	**522**	93	173
125	97	318	**806**	95	176

Time (min)	Item 3D Loaded 2-1/2" Conduit Steel Min (°F)	Item 3D Loaded 2-1/2" Conduit Steel Avg (°F)	Item 3D Loaded 2-1/2" Conduit Steel Max (°F)	Item 3D Loaded 2-1/2" Conduit Bare #8 Min (°F)	Item 3D Loaded 2-1/2" Conduit Bare #8 Avg (°F)
126	97	**326**	**799**	95	178
127	99	**338**	**811**	97	181
128	99	**331**	**657**	97	184
129	99	**342**	**673**	97	187
130	100	**329**	**604**	97	189
131	100	**364**	**657**	99	192
132	100	**350**	**649**	100	195
133	102	**364**	**687**	100	198
134	102	**388**	**689**	100	201
135	104	**399**	**784**	102	203
136	104	**387**	**732**	102	206
137	104	**387**	**712**	104	210
138	106	**396**	**770**	104	213
139	106	**399**	**779**	106	216
140	108	**412**	**788**	106	219
141	108	**416**	**783**	108	222
142	108	**420**	**792**	108	225
143	109	**427**	**793**	109	228
144	109	**434**	**779**	111	232
145	111	**441**	**799**	111	235
146	111	**442**	**817**	113	238
147	111	**459**	**817**	113	241
148	113	**472**	**831**	115	245
149	113	**496**	**844**	115	248
150	115	**493**	**844**	117	251
151	115	**507**	**856**	117	255
152	117	**513**	**846**	118	258
153	117	**502**	**819**	118	262
154	118	**516**	**840**	120	265
155	118	**515**	**822**	122	269
156	118	**503**	**846**	122	272
157	120	**492**	**847**	124	276
158	122	**509**	**844**	126	279
159	122	**518**	**824**	126	283
160	122	**525**	**847**	127	287
161	124	**531**	**871**	127	290
162	124	**548**	**871**	129	294
163	126	**543**	**889**	129	297
164	126	**551**	**903**	131	301
165	127	**564**	**900**	133	305
166	127	**577**	**896**	133	309
167	129	**572**	**882**	135	313

Time (min)	Item 3D Loaded 2-1/2" Conduit Steel Min (°F)	Item 3D Loaded 2-1/2" Conduit Steel Avg (°F)	Item 3D Loaded 2-1/2" Conduit Steel Max (°F)	Item 3D Loaded 2-1/2" Conduit Bare #8 Min (°F)	Item 3D Loaded 2-1/2" Conduit Bare #8 Avg (°F)
168	129	**576**	**907**	136	317
169	131	**589**	**918**	136	321
170	131	**589**	**912**	138	325
171	133	**597**	**919**	140	329
172	133	**589**	**928**	142	333
173	135	**593**	**919**	142	338
174	135	**594**	**945**	144	342
175	136	**609**	**946**	144	346
176	138	**610**	**907**	145	351
177	138	**618**	**972**	147	355
178	140	**631**	**997**	149	360
179	140	**625**	**925**	162	378
180	142	**641**	**934**	163	382
Max Temp:		641	997		382
Max Allowed:		321	397		321

Time (min)	Item 3D Loaded 2-1/2" Conduit Bare #8 Max (°F)	Item 3E Empty 1" Conduit Steel Min (°F)	Item 3E Empty 1" Conduit Steel Avg (°F)	Item 3E Empty 1" Conduit Steel Max (°F)	Item 3E Empty 1" Conduit Bare #8 Min (°F)	Item 3E Empty 1" Conduit Bare #8 Avg (°F)	Item 3E Empty 1" Conduit Bare #8 Max (°F)
0	73	68	72	75	68	72	75
1	72	68	72	73	68	72	73
2	72	68	72	73	68	72	73
3	72	68	72	73	68	72	73
4	72	68	72	73	68	72	73
5	72	68	72	73	68	72	73
6	73	66	72	75	68	72	73
7	72	68	72	73	68	72	73
8	72	68	72	73	68	72	73
9	72	68	72	73	68	72	73
10	72	68	72	73	68	72	73
11	72	68	72	73	68	72	73
12	72	68	72	73	68	72	73
13	73	68	72	73	68	72	73
14	73	68	72	73	68	72	73
15	72	68	72	73	68	72	73
16	72	68	72	75	68	72	75
17	72	66	72	75	68	72	73
18	72	68	72	75	68	72	75
19	72	68	73	75	68	72	75
20	72	68	73	75	68	72	73
21	73	68	73	75	68	72	75
22	73	68	73	77	66	73	75
23	72	68	73	77	68	72	75
24	72	68	74	77	68	73	75
25	72	68	74	79	68	73	75
26	73	66	75	79	68	73	75
27	73	68	75	81	68	73	75
28	73	68	76	81	68	73	75
29	72	68	76	82	68	74	77
30	73	68	77	82	68	74	77
31	73	68	77	84	68	75	77
32	72	68	78	86	68	75	79
33	73	68	79	88	68	75	79
34	73	68	80	90	68	76	79
35	73	68	81	90	68	76	79
36	73	68	82	93	68	77	81
37	73	68	83	93	68	78	82
38	73	68	84	95	68	79	82
39	73	68	85	99	68	79	84
40	75	68	86	100	68	80	84
41	75	68	88	102	68	81	86

Time (min)	Item 3D Loaded 2-1/2" Conduit Bare #8 Max (°F)	Item 3E Empty 1" Conduit Steel Min (°F)	Item 3E Empty 1" Conduit Steel Avg (°F)	Item 3E Empty 1" Conduit Steel Max (°F)	Item 3E Empty 1" Conduit Bare #8 Min (°F)	Item 3E Empty 1" Conduit Bare #8 Avg (°F)	Item 3E Empty 1" Conduit Bare #8 Max (°F)
42	75	68	89	104	68	82	88
43	75	68	91	108	70	83	90
44	75	68	92	109	70	84	91
45	77	68	94	113	70	85	93
46	77	70	96	117	70	87	95
47	77	70	98	118	70	88	97
48	79	70	100	122	70	90	99
49	79	70	102	126	70	91	100
50	79	70	104	129	70	93	104
51	81	70	107	133	72	95	106
52	81	72	109	138	72	97	108
53	82	72	112	140	72	99	111
54	82	72	114	145	72	100	115
55	84	72	117	149	73	102	118
56	84	72	120	154	73	105	120
57	86	72	123	158	75	107	124
58	88	73	126	162	73	109	127
59	88	73	128	167	75	112	131
60	88	73	131	171	75	115	133
61	90	73	135	176	75	117	136
62	90	73	138	181	77	120	140
63	91	75	141	185	79	123	145
64	91	75	145	190	79	126	149
65	95	75	148	196	79	129	153
66	95	77	152	201	79	132	158
67	95	77	155	208	81	135	162
68	97	77	159	216	82	138	167
69	99	77	162	223	82	142	171
70	100	79	166	230	82	145	176
71	100	79	170	237	84	148	181
72	102	79	173	244	84	152	185
73	104	81	178	253	86	155	192
74	106	81	181	262	86	159	198
75	108	82	185	271	88	163	203
76	108	82	189	280	88	166	210
77	111	82	193	289	90	170	216
78	111	84	196	300	91	174	223
79	113	86	200	309	93	178	230
80	115	86	204	320	93	181	237
81	117	88	207	331	95	185	244
82	118	88	211	343	95	189	253
83	120	90	215	354	97	192	262

Time (min)	Item 3D Loaded 2-1/2" Conduit Bare #8 Max (°F)	Item 3E Empty 1" Conduit Steel Min (°F)	Item 3E Empty 1" Conduit Steel Avg (°F)	Item 3E Empty 1" Conduit Steel Max (°F)	Item 3E Empty 1" Conduit Bare #8 Min (°F)	Item 3E Empty 1" Conduit Bare #8 Avg (°F)	Item 3E Empty 1" Conduit Bare #8 Max (°F)
84	122	90	219	367	97	196	270
85	124	91	222	379	99	200	279
86	126	93	227	394	100	204	288
87	127	93	230	**408**	102	208	297
88	129	95	234	**423**	102	211	307
89	131	95	238	**439**	104	215	316
90	133	97	242	**455**	106	219	327
91	133	97	246	**471**	108	224	338
92	136	99	251	**486**	108	227	351
93	138	100	255	**504**	111	231	361
94	140	126	261	**522**	111	236	374
95	144	127	273	**538**	113	240	387
96	144	129	283	**556**	115	245	399
97	147	131	308	**750**	115	249	412
98	149	133	**335**	**761**	117	254	426
99	153	135	**356**	**880**	118	258	441
100	154	135	**371**	**887**	118	263	455
101	156	135	**404**	**864**	120	268	469
102	158	136	**397**	**858**	122	273	484
103	160	138	**430**	**907**	122	278	500
104	165	138	**428**	**907**	124	315	622
105	167	140	**462**	**887**	126	324	644
106	171	117	**456**	**900**	127	332	666
107	172	117	**465**	**955**	144	383	705
108	176	120	**486**	**939**	145	382	714
109	180	142	**518**	**925**	145	402	716
110	183	142	**516**	**990**	147	413	736
111	187	142	**519**	**982**	147	446	759
112	192	142	**542**	**1022**	149	464	784
113	196	142	**559**	**909**	149	493	801
114	199	142	**580**	**930**	151	525	820
115	203	142	**575**	**943**	151	545	862
116	207	142	**604**	**941**	153	568	882
117	212	142	**607**	**961**	153	582	898
118	216	142	**621**	**999**	154	600	896
119	219	144	**626**	**986**	154	608	928
120	223	144	**624**	**1006**	156	622	950
121	228	145	**617**	**1018**	156	623	957
122	232	145	**633**	**1033**	158	617	968
123	237	147	**642**	**1044**	158	634	955
124	241	147	**667**	**1067**	160	642	975
125	246	149	**678**	**1098**	162	648	997

Time (min)	Item 3D Loaded 2-1/2" Conduit Bare #8 Max (°F)	Item 3E Empty 1" Conduit Steel Min (°F)	Item 3E Empty 1" Conduit Steel Avg (°F)	Item 3E Empty 1" Conduit Steel Max (°F)	Item 3E Empty 1" Conduit Bare #8 Min (°F)	Item 3E Empty 1" Conduit Bare #8 Avg (°F)	Item 3E Empty 1" Conduit Bare #8 Max (°F)
126	250	151	**694**	**1119**	163	649	1013
127	255	151	**661**	**1132**	165	659	1044
128	259	153	**666**	**1141**	165	671	1067
129	264	153	**683**	**1152**	167	673	1078
130	268	154	**701**	**1171**	169	689	1089
131	273	156	**717**	**1186**	171	697	1101
132	277	158	**729**	**1189**	172	695	1108
133	282	158	**746**	**1202**	174	694	1060
134	288	160	**760**	**1209**	176	685	1067
135	293	162	**784**	**1225**	180	702	1094
136	297	163	**797**	**1242**	183	699	1125
137	302	165	**820**	**1261**	187	704	1128
138	306	167	**830**	**1272**	190	720	1170
139	311	169	**842**	**1281**	194	720	1188
140	316	171	**812**	**1285**	198	725	1134
141	322	172	**810**	**1301**	201	721	1222
142	327	176	**812**	**1305**	205	725	1180
143	333	178	**833**	**1317**	208	735	1247
144	338	180	**797**	**1330**	212	731	1265
145	342	181	**778**	**1339**	216	737	1274
146	347	183	**757**	**1348**	219	758	1281
147	352	187	**776**	**1353**	223	742	1287
148	358	189	**769**	**1326**	225	757	1297
149	363	190	**788**	**1238**	228	792	1314
150	369	192	**779**	**1180**	232	768	1162
151	374	194	**787**	**1299**	234	758	1179
152	379	196	**792**	**1114**	234	764	1200
153	385	198	**786**	**1285**	235	785	1251
154	390	199	**788**	**1218**	237	808	1209
155	396	201	**801**	**1175**	241	807	1211
156	401	203	**794**	**979**	243	791	1260
157	406	205	**810**	**1033**	244	833	1263
158	412	207	**806**	**988**	248	823	1251
159	417	208	**821**	**966**	252	792	1258
160	424	210	**821**	**988**	255	812	1267
161	430	212	**831**	**982**	259	833	1270
162	435	214	**830**	**966**	262	824	1164
163	442	216	**850**	**970**	266	887	1222
164	448	217	**858**	**1080**	268	856	1272
165	455	219	**873**	**1051**	271	893	1195
166	460	219	**880**	**1038**	275	908	1245
167	468	221	**894**	**1054**	277	908	1202

Time (min)	Item 3D Loaded 2-1/2" Conduit Bare #8 Max (°F)	Item 3E Empty 1" Conduit Steel Min (°F)	Item 3E Empty 1" Conduit Steel Avg (°F)	Item 3E Empty 1" Conduit Steel Max (°F)	Item 3E Empty 1" Conduit Bare #8 Min (°F)	Item 3E Empty 1" Conduit Bare #8 Avg (°F)	Item 3E Empty 1" Conduit Bare #8 Max (°F)
168	473	223	**896**	**1092**	280	933	1249
169	480	225	**894**	**1105**	284	897	1105
170	487	226	**914**	**1117**	286	909	1083
171	493	228	**941**	**1159**	289	898	1071
172	500	230	**963**	**1159**	293	906	1107
173	507	232	**991**	**1188**	297	929	1134
174	514	234	**995**	**1197**	298	902	1108
175	522	235	**998**	**1222**	302	879	1141
176	529	237	**1035**	**1233**	304	891	1105
177	536	239	**1041**	**1240**	311	890	1112
178	547	243	**1052**	**1267**	320	901	1132
179	561	244	**1067**	**1278**	327	919	1161
180	577	250	**1092**	**1270**	352	916	1188
Max Temp:	577		1092	1353		933	1314
Max Allowed:	398		322	400		322	400

Time (min)	Item 3F Loaded 1" Conduit Steel Min (°F)	Item 3F Loaded 1" Conduit Steel Avg (°F)	Item 3F Loaded 1" Conduit Steel Max (°F)	Item 3F Loaded 1" Conduit Bare #8 Min (°F)	Item 3F Loaded 1" Conduit Bare #8 Avg (°F)	Item 3F Loaded 1" Conduit Bare #8 Max (°F)	Item 3G Unistrut Support Structure Min (°F)
0	68	72	73	67	72	73	67
1	68	72	73	67	71	73	67
2	68	72	73	67	72	73	67
3	68	72	73	67	72	73	66
4	68	72	73	67	72	73	66
5	68	72	73	67	72	73	66
6	68	72	75	67	72	73	66
7	68	72	73	67	72	73	66
8	68	72	73	67	72	73	66
9	68	72	73	67	72	73	66
10	66	72	73	67	72	73	66
11	68	72	73	67	71	73	66
12	68	72	73	67	72	73	66
13	68	72	73	67	72	73	66
14	68	72	73	67	72	73	66
15	66	72	73	67	72	73	65
16	66	72	73	67	72	73	66
17	66	72	73	67	72	73	66
18	68	72	75	67	72	73	66
19	68	72	73	67	72	73	66
20	68	72	75	67	72	73	66
21	68	72	75	67	72	74	66
22	68	72	75	67	72	74	66
23	68	73	75	67	72	74	66
24	68	73	77	67	72	74	66
25	68	73	77	67	72	74	66
26	68	73	77	67	72	74	66
27	68	74	79	67	72	75	67
28	68	74	81	67	73	75	66
29	68	75	81	67	73	76	66
30	68	75	82	67	73	76	66
31	68	76	84	67	73	76	66
32	68	76	84	67	74	77	67
33	68	77	86	67	74	78	67
34	68	78	88	67	74	78	67
35	68	78	91	67	75	79	67
36	68	79	91	67	75	80	67
37	68	80	93	67	76	81	67
38	68	81	97	67	76	81	67
39	68	82	99	68	77	83	68
40	68	83	100	67	78	84	68
41	68	84	104	68	78	85	68

Time (min)	Item 3F Loaded 1" Conduit Steel Min (°F)	Item 3F Loaded 1" Conduit Steel Avg (°F)	Item 3F Loaded 1" Conduit Steel Max (°F)	Item 3F Loaded 1" Conduit Bare #8 Min (°F)	Item 3F Loaded 1" Conduit Bare #8 Avg (°F)	Item 3F Loaded 1" Conduit Bare #8 Max (°F)	Item 3G Unistrut Support Structure Min (°F)
42	68	86	106	68	79	86	68
43	68	87	108	68	80	88	69
44	68	88	111	68	81	89	68
45	68	90	113	68	82	90	69
46	69	91	115	68	83	92	69
47	69	93	118	69	84	94	70
48	69	94	120	69	85	96	70
49	69	96	124	69	86	97	70
50	69	98	126	69	88	99	70
51	69	100	129	69	89	101	71
52	70	102	133	69	91	104	71
53	70	104	136	70	92	106	71
54	70	107	140	70	94	108	72
55	71	109	144	70	96	112	72
56	71	111	147	70	98	115	73
57	71	114	149	71	100	118	73
58	71	116	153	71	102	122	74
59	72	119	156	71	104	126	74
60	72	121	160	72	106	130	75
61	73	124	163	72	108	134	75
62	73	127	167	72	111	137	77
63	74	130	171	73	113	141	77
64	74	132	174	73	115	145	78
65	75	135	178	74	118	149	79
66	75	138	181	74	120	152	80
67	75	141	185	75	123	156	80
68	76	144	190	76	126	159	81
69	77	147	194	76	128	163	82
70	77	150	199	76	131	166	83
71	78	152	203	77	133	169	84
72	78	155	208	77	136	172	85
73	79	158	212	78	139	176	86
74	80	161	217	78	141	178	87
75	81	164	223	79	144	180	88
76	81	167	228	80	147	183	89
77	82	169	234	80	150	185	90
78	83	173	241	81	152	187	91
79	84	175	248	81	155	188	92
80	85	178	253	82	157	192	93
81	85	181	262	83	160	196	94
82	86	184	270	84	163	200	95
83	87	187	277	84	166	205	96

Time (min)	Item 3F Loaded 1" Conduit Steel Min (°F)	Item 3F Loaded 1" Conduit Steel Avg (°F)	Item 3F Loaded 1" Conduit Steel Max (°F)	Item 3F Loaded 1" Conduit Bare #8 Min (°F)	Item 3F Loaded 1" Conduit Bare #8 Avg (°F)	Item 3F Loaded 1" Conduit Bare #8 Max (°F)	Item 3G Unistrut Support Structure Min (°F)
84	88	190	286	85	168	209	97
85	89	193	295	86	171	214	98
86	90	196	304	87	174	219	98
87	91	199	313	87	177	223	100
88	91	203	322	88	179	229	100
89	93	206	331	89	183	234	101
90	93	210	342	90	186	240	102
91	94	213	352	91	188	245	102
92	95	217	361	92	192	252	103
93	96	221	374	92	195	258	103
94	97	225	385	93	198	264	104
95	98	229	396	94	202	270	105
96	100	232	**406**	95	206	277	105
97	101	237	**417**	96	209	283	106
98	102	244	**428**	96	213	290	107
99	103	245	**439**	97	216	297	107
100	104	271	**453**	99	220	304	108
101	105	268	**464**	99	224	312	108
102	106	268	**482**	100	228	319	109
103	107	271	**484**	101	232	327	110
104	108	286	**545**	102	236	334	110
105	109	305	**599**	103	240	342	111
106	110	309	**592**	104	244	350	112
107	112	311	**594**	105	248	358	112
108	113	**362**	**766**	106	252	366	112
109	114	**370**	**831**	107	256	374	112
110	115	**371**	**839**	108	261	383	112
111	116	**394**	**858**	109	265	391	113
112	118	**401**	**871**	110	270	400	114
113	119	**422**	**856**	110	275	409	114
114	120	**441**	**855**	112	280	418	114
115	122	**448**	**858**	112	285	427	115
116	123	**464**	**865**	113	290	437	115
117	124	**463**	**845**	114	295	446	115
118	126	**461**	**840**	115	301	456	116
119	127	**477**	**887**	116	307	466	116
120	129	**489**	**937**	117	313	477	116
121	131	**484**	**956**	118	319	488	117
122	131	**493**	**934**	119	325	499	117
123	133	**496**	**953**	120	331	510	117
124	135	**521**	**935**	121	338	521	118
125	136	**540**	**959**	122	344	532	118

Time (min)	Item 3F Loaded 1" Conduit Steel Min (°F)	Item 3F Loaded 1" Conduit Steel Avg (°F)	Item 3F Loaded 1" Conduit Steel Max (°F)	Item 3F Loaded 1" Conduit Bare #8 Min (°F)	Item 3F Loaded 1" Conduit Bare #8 Avg (°F)	Item 3F Loaded 1" Conduit Bare #8 Max (°F)	Item 3G Unistrut Support Structure Min (°F)
126	136	**555**	**920**	123	351	544	118
127	138	**560**	**969**	124	358	556	118
128	140	**580**	**933**	126	375	567	119
129	142	**589**	**907**	127	377	598	119
130	142	**606**	**894**	128	407	599	119
131	144	**614**	**876**	129	405	614	119
132	145	**629**	**927**	131	421	628	119
133	149	**638**	**918**	132	437	643	119
134	149	**640**	**981**	134	449	659	119
135	151	**647**	**999**	135	473	672	119
136	153	**666**	**1008**	137	483	688	119
137	154	**678**	**995**	138	490	694	119
138	156	**664**	**970**	140	503	719	119
139	158	**662**	**989**	141	518	730	119
140	160	**676**	**1004**	143	530	735	120
141	162	**677**	**966**	144	526	760	120
142	163	**676**	**973**	145	544	757	120
143	165	**678**	**984**	147	556	776	120
144	167	**688**	**997**	148	571	803	120
145	169	**682**	**1006**	150	575	826	120
146	169	**695**	**1009**	151	592	841	120
147	171	**688**	**975**	152	593	833	120
148	172	**695**	**1011**	154	595	830	119
149	174	**695**	**926**	155	621	840	120
150	176	**711**	**1036**	157	631	857	120
151	178	**682**	**907**	158	653	874	120
152	180	**681**	**956**	159	665	901	120
153	180	**673**	**991**	160	677	919	120
154	181	**678**	**975**	162	695	948	121
155	185	**680**	**972**	163	702	964	121
156	185	**682**	**994**	165	693	956	121
157	187	**685**	**1010**	166	710	1011	121
158	189	**687**	**1024**	167	700	1022	121
159	190	**689**	**1048**	169	719	1031	121
160	190	**701**	**963**	170	696	1047	122
161	194	**694**	**934**	171	716	1030	122
162	194	**693**	**941**	173	713	1037	122
163	196	**710**	**921**	174	714	1021	122
164	198	**706**	**898**	175	688	1018	122
165	199	**704**	**910**	176	717	1084	122
166	201	**711**	**990**	177	697	1083	122
167	201	**699**	**856**	178	671	993	123

Time (min)	Item 3F Loaded 1" Conduit Steel Min (°F)	Item 3F Loaded 1" Conduit Steel Avg (°F)	Item 3F Loaded 1" Conduit Steel Max (°F)	Item 3F Loaded 1" Conduit Bare #8 Min (°F)	Item 3F Loaded 1" Conduit Bare #8 Avg (°F)	Item 3F Loaded 1" Conduit Bare #8 Max (°F)	Item 3G Unistrut Support Structure Min (°F)
168	203	**691**	**903**	179	656	878	123
169	203	**695**	**883**	180	653	897	123
170	205	**682**	**828**	182	672	938	123
171	207	**682**	**856**	183	655	946	123
172	207	**692**	**979**	184	665	946	123
173	208	**690**	**934**	185	667	970	123
174	208	**688**	**876**	186	636	836	123
175	210	**679**	**885**	187	626	796	123
176	210	**683**	**851**	188	623	816	123
177	212	**693**	**862**	189	627	821	123
178	214	**699**	**847**	190	629	827	123
179	214	**703**	**849**	191	624	764	123
180	216	**706**	**883**	192	638	841	123
Max Temp:		711	1048		719	1084	
Max Allowed:		322	398		322	398	

Time (min)	Item 3G Unistrut Support Structure Average (°F)	Item 3G Unistrut Support Structure Max (°F)	Item 3H 2"x2" Support Structure Min (°F)	Item 3H 2"x2" Support Structure Average (°F)	Item 3H 2"x2" Support Structure Max (°F)	Item 3I Junction Box Sides Min (°F)	Item 3I Junction Box Sides Average (°F)	Item 3I Junction Box Sides Max (°F)
0	71	72	67	71	73	73	73	74
1	72	84	68	73	92	73	74	74
2	74	125	68	78	174	73	74	74
3	77	175	67	85	263	73	74	74
4	80	209	67	90	316	73	73	74
5	83	243	67	95	365	73	74	74
6	85	278	67	101	416	73	73	74
7	89	315	67	107	472	73	74	74
8	92	351	67	113	526	73	74	74
9	95	384	68	119	572	73	73	74
10	98	415	67	125	615	73	73	74
11	102	444	68	131	655	73	74	74
12	105	469	68	137	691	73	74	74
13	108	491	67	143	725	73	74	74
14	111	513	68	149	758	73	74	74
15	115	533	67	155	790	73	74	74
16	118	551	68	161	820	73	74	75
17	121	569	67	167	848	73	74	74
18	125	586	67	173	874	73	74	74
19	128	602	67	179	899	73	74	75
20	131	617	68	186	923	73	74	74
21	135	632	68	192	945	74	74	74
22	138	646	67	197	966	73	74	75
23	141	661	68	203	985	74	75	76
24	145	673	68	208	1003	74	75	76
25	148	686	68	213	1019	74	75	76
26	152	698	68	218	1036	74	75	77
27	155	710	68	223	1052	74	76	78
28	159	722	68	228	1067	74	76	79
29	162	734	68	233	1082	75	77	80
30	166	745	69	238	1097	75	77	82
31	169	756	69	243	1111	75	78	83
32	173	767	69	248	1126	76	79	85
33	176	778	69	253	1140	77	80	87
34	180	789	70	258	1154	77	80	88
35	184	801	69	264	1168	78	81	90
36	189	813	70	269	1182	78	82	92
37	194	824	70	275	1196	79	83	94
38	198	837	71	281	1210	80	84	97
39	203	848	70	288	1224	81	86	99
40	209	861	71	295	1238	82	87	102
41	214	873	71	301	1250	83	88	104

Time (min)	Item 3G Unistrut Support Structure Average (°F)	Item 3G Unistrut Support Structure Max (°F)	Item 3H 2"x2" Support Structure Min (°F)	Item 3H 2"x2" Support Structure Average (°F)	Item 3H 2"x2" Support Structure Max (°F)	Item 3I Junction Box Sides Min (°F)	Item 3I Junction Box Sides Average (°F)	Item 3I Junction Box Sides Max (°F)
42	220	885	71	308	1263	84	90	107
43	226	898	72	316	1275	85	92	110
44	232	910	72	323	1288	86	93	112
45	240	923	72	331	1301	87	95	115
46	247	936	73	340	1313	89	97	118
47	257	949	73	348	1325	90	99	121
48	267	962	74	358	1336	92	101	124
49	279	976	74	367	1347	93	103	126
50	286	889	75	377	1358	95	105	130
51	296	845	75	388	1368	97	107	132
52	309	830	76	390	1239	98	109	135
53	326	879	76	382	1234	100	112	139
54	343	923	77	397	1279	102	114	142
55	359	931	78	402	1219	104	117	145
56	383	1082	78	394	848	106	119	148
57	400	1099	79	409	854	108	122	151
58	417	1107	80	426	861	111	124	154
59	436	1126	81	433	864	113	127	157
60	454	1142	82	444	791	115	130	161
61	472	1156	83	463	842	118	133	163
62	485	1083	85	482	869	121	136	167
63	503	1110	86	497	880	124	139	170
64	522	1143	88	511	1001	126	142	173
65	540	1170	89	521	958	129	145	176
66	554	1142	91	533	944	132	148	178
67	571	1142	93	554	961	134	151	181
68	588	1138	95	570	968	138	154	184
69	604	1157	97	593	1026	141	157	186
70	621	1296	99	602	1042	144	160	188
71	628	1310	101	629	1038	147	163	190
72	649	1323	104	635	1046	150	166	192
73	658	1338	106	636	1061	153	169	194
74	677	1351	109	636	1086	157	172	196
75	685	1364	112	654	1121	159	175	197
76	693	1379	114	651	1064	163	178	199
77	689	1196	117	670	1079	166	180	200
78	689	1137	120	683	1109	169	183	201
79	693	1108	122	724	1177	173	185	202
80	710	1201	125	721	1183	176	188	202
81	728	1126	128	705	1180	179	190	203
82	743	1236	131	721	1187	182	193	205
83	741	1128	134	730	1198	185	195	207

Time (min)	Item 3G Unistrut Support Structure Average (°F)	Item 3G Unistrut Support Structure Max (°F)	Item 3H 2"x2" Support Structure Min (°F)	Item 3H 2"x2" Support Structure Average (°F)	Item 3H 2"x2" Support Structure Max (°F)	Item 3I Junction Box Sides Min (°F)	Item 3I Junction Box Sides Average (°F)	Item 3I Junction Box Sides Max (°F)
84	748	1126	136	736	1211	188	197	210
85	778	1277	139	739	1226	190	199	212
86	782	1172	142	744	1238	192	201	214
87	818	1198	145	751	1246	194	203	216
88	856	1500	148	742	1098	195	205	218
89	842	1302	150	752	1186	198	207	220
90	893	1616	153	747	1181	200	209	223
91	901	1619	157	754	1175	202	210	225
92	910	1441	159	740	1127	204	212	228
93	922	1469	161	755	1100	204	214	230
94	907	1354	164	779	1198	205	216	234
95	905	1513	166	792	1196	205	218	237
96	934	1470	169	788	1195	205	221	240
97	964	1545	172	793	1165	208	224	242
98	964	1556	174	816	1174	211	227	246
99	1009	1746	177	817	1206	214	230	248
100	929	1595	179	819	1222	218	234	252
101	994	1609	182	831	1257	223	237	255
102	1019	1715	185	808	1158	227	241	258
103	984	1634	187	853	1304	231	245	261
104	1010	1647	190	876	1255	235	249	264
105	1035	1661	192	871	1260	239	253	268
106	1084	1819	195	873	1190	243	256	271
107	1088	1823	197	896	1208	247	260	275
108	1065	1688	200	899	1201	251	264	279
109	1066	1699	202	899	1213	255	268	282
110	1096	1837	205	938	1225	259	272	286
111	1098	1802	207	950	1242	263	276	290
112	1076	1726	210	953	1259	267	280	293
113	1082	1734	212	963	1310	271	284	297
114	1070	1740	214	982	1437	275	288	301
115	1123	1847	217	994	1502	279	292	305
116	1090	1750	220	1019	1548	284	297	309
117	1106	1754	222	1048	1594	288	301	313
118	1083	1758	224	1074	1624	293	305	317
119	1133	1852	227	1094	1635	297	309	322
120	1121	1853	229	1093	1649	302	314	326
121	1127	1854	232	1152	1663	306	318	332
122	1130	1866	234	1089	1694	310	**323**	336
123	1135	1865	237	1097	1686	315	**327**	341
124	1135	1866	240	1163	1728	319	**332**	346
125	1141	1874	242	1137	1720	324	**336**	351

Time (min)	Item 3G Unistrut Support Structure Average (°F)	Item 3G Unistrut Support Structure Max (°F)	Item 3H 2"x2" Support Structure Min (°F)	Item 3H 2"x2" Support Structure Average (°F)	Item 3H 2"x2" Support Structure Max (°F)	Item 3I Junction Box Sides Min (°F)	Item 3I Junction Box Sides Average (°F)	Item 3I Junction Box Sides Max (°F)
126	1161	1846	245	1160	1734	329	**341**	356
127	1155	1837	247	1132	1753	333	**345**	362
128	1145	1880	250	1122	1757	338	**350**	367
129	1147	1878	253	1103	1755	343	**355**	371
130	1149	1875	255	1118	1762	347	**360**	377
131	1152	1874	258	1122	1776	352	**365**	383
132	1152	1875	260	1075	1784	357	**369**	388
133	1157	1871	263	1190	1803	362	**375**	393
134	1151	1814	265	1119	1816	367	**379**	**399**
135	1195	1886	268	1158	1848	372	**385**	**404**
136	1198	1889	271	1126	1836	377	**390**	**410**
137	1197	1892	274	1159	1830	383	**395**	**416**
138	1189	1894	276	1204	1865	388	**401**	**422**
139	1163	1841	279	1246	1842	393	**406**	**427**
140	1193	1903	282	1249	1845	398	**411**	**433**
141	1193	1906	285	1214	1855	404	**417**	**439**
142	1191	1910	287	1225	1859	409	**423**	**445**
143	1192	1914	290	1250	1881	415	**428**	**451**
144	1192	1918	292	1274	1894	420	**434**	**457**
145	1198	1921	295	1218	1881	426	**440**	**463**
146	1158	1875	298	1260	1884	432	**446**	**470**
147	1203	1929	300	1279	1934	438	**452**	**476**
148	1205	1932	303	1265	1942	444	**459**	**483**
149	1207	1929	306	1272	1913	450	**465**	**490**
150	1209	1931	308	1323	1922	456	**472**	**497**
151	1233	1935	311	1339	1967	462	**480**	**505**
152	1219	1938	313	1344	1961	468	**487**	**513**
153	1221	1941	316	1347	1966	474	**496**	**523**
154	1224	1945	319	1403	1973	480	**505**	**534**
155	1225	1950	321	1401	1979	487	**600**	**1667**
156	1228	1954	324	1389	1985	494	**613**	**1688**
157	1230	1964	326	1420	1992	501	**584**	**1094**
158	1231	1963	329	1305	1989	507	**559**	**673**
159	1236	1970	331	1431	1990	515	**578**	**728**
160	1236	1974	334	1446	1996	522	**603**	**798**
161	1249	1968	336	1456	1997	530	**634**	**884**
162	1243	1974	338	1464	2007	538	**671**	**981**
163	1260	1978	341	1451	2007	545	**711**	**1080**
164	1263	1982	343	1462	2009	553	**755**	**1180**
165	1271	1987	345	1491	2015	561	**799**	**1275**
166	1258	1991	347	1426	2011	568	**843**	**1368**
167	1263	1995	350	1429	2020	577	**887**	**1456**

Time (min)	Item 3G Unistrut Support Structure Average (°F)	Item 3G Unistrut Support Structure Max (°F)	Item 3H 2"x2" Support Structure Min (°F)	Item 3H 2"x2" Support Structure Average (°F)	Item 3H 2"x2" Support Structure Max (°F)	Item 3I Junction Box Sides Min (°F)	Item 3I Junction Box Sides Average (°F)	Item 3I Junction Box Sides Max (°F)
168	1263	1997	352	1420	2018	586	**929**	**1535**
169	1270	2000	354	1432	2026	595	**968**	**1611**
170	1274	2004	356	1489	2033	605	**1004**	**1680**
171	1270	1979	358	1432	2039	616	**1039**	**1742**
172	1237	1984	360	1500	2044	628	**1075**	**1798**
173	1241	1987	362	1368	2042	643	**1110**	**1851**
174	1242	1991	364	1447	2044	660	**1146**	**1897**
175	1243	1994	366	1377	2046	681	**1186**	**1941**
176	1242	1998	368	1397	2048	712	**1230**	**1985**
177	1243	2002	370	1472	2051	754	**1279**	**2027**
178	1246	2006	372	1365	2053	816	**1334**	**2064**
179	1247	2010	374	1394	2057	896	**1393**	**2096**
180	1248	2015	376	1435	2061	992	**1458**	**2123**
Max Temp:	1274	2015		1500	2061		1458	2123
Max Allowed:	321	397		321	398		323	399

Time (min)	Item 3J Cable Air Drop Min (°F)	Item 3J Cable Air Drop Avg (°F)	Item 3J Cable Air Drop Max (°F)
0	68	71	73
1	68	71	73
2	68	71	73
3	68	71	73
4	68	71	73
5	68	71	73
6	68	71	73
7	68	71	73
8	68	71	73
9	68	71	73
10	68	71	73
11	68	71	73
12	68	71	73
13	68	71	73
14	68	71	73
15	68	71	73
16	68	71	73
17	68	71	73
18	68	71	73
19	68	71	73
20	68	71	73
21	68	71	73
22	68	71	73
23	67	71	73
24	67	71	73
25	68	71	73
26	67	71	73
27	68	71	73
28	67	71	73
29	68	71	73
30	67	71	73
31	68	71	73
32	67	71	73
33	67	71	73
34	68	71	73
35	67	71	73
36	68	71	73
37	67	71	73
38	68	71	74
39	68	71	74
40	68	71	74
41	68	71	73

Time (min)	Item 3J Cable Air Drop Min (°F)	Item 3J Cable Air Drop Avg (°F)	Item 3J Cable Air Drop Max (°F)
42	68	72	74
43	68	72	74
44	68	72	74
45	68	72	74
46	68	72	74
47	68	72	75
48	68	72	76
49	68	72	76
50	69	73	76
51	69	73	76
52	69	73	77
53	69	74	78
54	69	74	78
55	69	75	79
56	69	75	80
57	69	75	81
58	69	76	82
59	69	76	83
60	70	77	84
61	70	77	85
62	70	78	87
63	70	79	88
64	71	80	89
65	71	80	91
66	71	81	93
67	71	82	94
68	71	82	96
69	71	83	97
70	71	84	100
71	71	85	102
72	72	86	103
73	72	87	105
74	72	88	107
75	73	89	109
76	73	90	112
77	73	91	113
78	73	92	115
79	74	93	117
80	74	95	119
81	74	96	120
82	75	97	122
83	75	98	124

Time (min)	Item 3J Cable Air Drop Min (°F)	Item 3J Cable Air Drop Avg (°F)	Item 3J Cable Air Drop Max (°F)
84	75	99	126
85	76	100	128
86	77	101	129
87	77	103	130
88	77	104	132
89	78	105	133
90	78	106	135
91	78	107	136
92	79	109	137
93	79	109	138
94	80	111	140
95	80	112	142
96	80	113	143
97	81	115	145
98	82	116	146
99	82	117	147
100	82	119	148
101	83	120	149
102	84	121	151
103	84	122	152
104	85	124	154
105	85	125	155
106	86	127	157
107	86	128	158
108	87	130	161
109	87	131	163
110	88	133	166
111	89	135	169
112	89	137	172
113	90	139	175
114	91	140	178
115	92	142	181
116	92	144	184
117	93	146	187
118	93	148	190
119	94	150	193
120	95	152	197
121	96	154	200
122	96	156	203
123	97	158	207
124	98	161	211
125	98	163	215

Time (min)	Item 3J Cable Air Drop Min (°F)	Item 3J Cable Air Drop Avg (°F)	Item 3J Cable Air Drop Max (°F)
126	99	166	219
127	100	169	223
128	101	171	227
129	101	174	231
130	102	177	236
131	103	180	240
132	104	182	245
133	104	185	250
134	105	188	255
135	105	191	259
136	107	194	265
137	107	197	269
138	108	200	274
139	108	203	279
140	110	206	285
141	110	209	290
142	111	213	296
143	112	216	301
144	113	219	307
145	113	222	312
146	114	226	318
147	115	229	324
148	116	233	330
149	116	236	336
150	117	240	342
151	118	243	348
152	119	247	354
153	120	251	361
154	121	255	368
155	121	259	374
156	122	263	381
157	123	267	388
158	124	271	396
159	125	275	**403**
160	126	279	**410**
161	126	284	**418**
162	127	288	**426**
163	128	293	**433**
164	129	297	**441**
165	130	302	**449**
166	131	307	**457**
167	132	311	**465**

Time (min)	Item 3J Cable Air Drop Min (°F)	Item 3J Cable Air Drop Avg (°F)	Item 3J Cable Air Drop Max (°F)
168	133	316	**473**
169	133	**321**	**482**
170	134	**326**	**491**
171	135	**331**	**499**
172	136	**337**	**508**
173	137	**342**	**517**
174	138	**348**	**526**
175	139	**353**	**536**
176	140	**359**	**545**
177	141	**364**	**554**
178	142	**370**	**564**
179	142	**380**	**578**
180	144	**387**	**607**
Max Temp:		387	607
Max Allowed:		321	398

Time (min)	E119 Std Average (°F)	Furnace Average (°F)	Integration of Furnace Average (°F•min)	Integration of E119 Std Average (°F•min)	Error (%)	Furnace Probe #1 (°F)	Furnace Probe #2 (°F)	Furnace Probe #3 (°F)
0	68	69	0	0	0.00%	70	68	68
1	254	175	54	466	-88.5%	128	174	257
2	441	570	358	932	-61.6%	390	475	828
3	627	799	974	1398	-30.3%	631	779	936
4	814	862	1737	1864	-6.82%	741	823	941
5	1000	958	2579	2330	10.67%	840	921	1029
6	1060	1076	3528	3412	3.39%	955	1076	1149
7	1120	1174	4585	4494	2.03%	1065	1209	1244
8	1180	1226	5717	5576	2.54%	1138	1280	1285
9	1240	1260	6893	6658	3.52%	1187	1322	1311
10	1300	1284	8097	7740	4.61%	1218	1349	1316
11	1328	1306	9324	9022	3.34%	1244	1368	1329
12	1347	1324	10570	10304	2.59%	1267	1387	1341
13	1364	1345	11837	11586	2.16%	1291	1409	1362
14	1381	1366	13124	12868	1.99%	1314	1431	1384
15	1396	1385	14431	14150	1.99%	1335	1455	1405
16	1410	1403	15757	15514	1.57%	1353	1476	1422
17	1424	1418	17099	16878	1.31%	1369	1489	1437
18	1436	1432	18456	18242	1.18%	1383	1504	1449
19	1448	1446	19827	19606	1.13%	1398	1515	1463
20	1459	1459	21212	20970	1.15%	1412	1526	1478
21	1470	1472	22609	22386	1.00%	1426	1536	1493
22	1480	1482	24018	23802	0.91%	1438	1544	1501
23	1490	1487	25434	25218	0.86%	1444	1547	1503
24	1499	1492	26856	26634	0.83%	1450	1551	1505
25	1508	1498	28283	28050	0.83%	1457	1557	1510
26	1517	1508	29718	29512	0.70%	1465	1565	1522
27	1525	1517	31162	30974	0.61%	1476	1572	1532
28	1533	1525	32615	32436	0.55%	1484	1581	1538
29	1541	1533	34076	33898	0.52%	1493	1589	1544
30	1549	1540	35544	35360	0.52%	1500	1596	1551
31	1556	1547	37019	36875	0.39%	1507	1603	1556
32	1563	1553	38501	38390	0.29%	1515	1608	1561
33	1570	1562	39991	39905	0.21%	1522	1618	1571
34	1576	1570	41488	41420	0.17%	1530	1625	1577
35	1583	1577	42994	42935	0.14%	1538	1632	1584
36	1589	1583	44506	44450	0.13%	1545	1638	1593
37	1595	1589	46024	45965	0.13%	1552	1646	1600
38	1601	1595	47548	47480	0.14%	1558	1652	1604
39	1606	1599	49077	48995	0.17%	1563	1657	1607
40	1612	1604	50610	50510	0.20%	1568	1659	1613
41	1617	1608	52148	52111	0.07%	1572	1663	1618
42	1623	1615	53691	53712	-0.04%	1579	1671	1629
43	1628	1622	55242	55314	-0.13%	1585	1678	1635

Time (min)	E119 Std Average (°F)	Furnace Average (°F)	Integration of Furnace Average (°F•min)	Integration of E119 Std Average (°F•min)	Error (%)	Furnace Probe #1 (°F)	Furnace Probe #2 (°F)	Furnace Probe #3 (°F)
44	1633	1629	56799	56915	-0.20%	1593	1686	1642
45	1638	1636	58364	58516	-0.26%	1600	1694	1649
46	1643	1641	59934	60117	-0.30%	1607	1698	1656
47	1648	1646	61509	61718	-0.34%	1612	1700	1660
48	1652	1651	63090	63320	-0.36%	1617	1705	1664
49	1657	1656	64675	64921	-0.38%	1622	1710	1671
50	1661	1660	66264	66522	-0.39%	1627	1718	1675
51	1666	1663	67857	68123	-0.39%	1632	1722	1678
52	1670	1667	69455	69724	-0.39%	1637	1726	1685
53	1674	1671	71056	71326	-0.38%	1641	1731	1689
54	1678	1673	72660	72927	-0.37%	1645	1730	1689
55	1682	1676	74267	74528	-0.35%	1649	1735	1690
56	1686	1680	75877	76129	-0.33%	1653	1736	1693
57	1690	1683	77490	77730	-0.31%	1657	1741	1698
58	1694	1687	79107	79332	-0.28%	1660	1743	1703
59	1698	1694	80730	80933	-0.25%	1668	1752	1713
60	1701	1699	82358	82534	-0.21%	1674	1756	1717
61	1705	1705	83992	84135	-0.17%	1679	1763	1721
62	1709	1708	85631	85736	-0.12%	1683	1769	1722
63	1712	1713	87273	87338	-0.07%	1688	1770	1728
64	1716	1717	88920	88939	-0.02%	1693	1779	1733
65	1719	1719	90570	90540	0.03%	1695	1779	1735
66	1722	1722	92222	92249	-0.03%	1698	1783	1737
67	1726	1724	93877	93957	-0.09%	1701	1785	1739
68	1729	1727	95534	95666	-0.14%	1705	1788	1741
69	1732	1730	97194	97375	-0.19%	1709	1792	1744
70	1735	1733	98858	99084	-0.23%	1712	1795	1748
71	1738	1736	100525	100793	-0.27%	1714	1797	1750
72	1742	1739	102194	102501	-0.30%	1718	1801	1752
73	1745	1742	103866	104210	-0.33%	1721	1802	1756
74	1748	1745	105542	105919	-0.36%	1725	1807	1762
75	1751	1747	107220	107628	-0.38%	1727	1808	1766
76	1753	1752	108902	109336	-0.40%	1731	1813	1772
77	1756	1757	110588	111045	-0.41%	1737	1819	1780
78	1759	1760	112278	112754	-0.42%	1741	1823	1782
79	1762	1763	113972	114463	-0.43%	1745	1826	1783
80	1765	1766	115668	116171	-0.43%	1748	1829	1786
81	1768	1768	117367	117880	-0.44%	1751	1832	1787
82	1770	1771	119068	119589	-0.44%	1753	1833	1790
83	1773	1773	120773	121298	-0.43%	1754	1834	1794
84	1776	1775	122479	123006	-0.43%	1756	1837	1797
85	1778	1776	124187	124715	-0.42%	1759	1842	1798
86	1781	1779	125896	126424	-0.42%	1761	1843	1798
87	1783	1780	127608	128133	-0.41%	1763	1844	1800

Time (min)	E119 Std Average (°F)	Furnace Average (°F)	Integration of Furnace Average (°F•min)	Integration of E119 Std Average (°F•min)	Error (%)	Furnace Probe #1 (°F)	Furnace Probe #2 (°F)	Furnace Probe #3 (°F)
88	1786	1782	129321	129841	-0.40%	1766	1845	1803
89	1788	1785	131037	131550	-0.39%	1769	1848	1809
90	1791	1787	132755	133259	-0.38%	1773	1851	1813
91	1793	1789	134475	134968	-0.37%	1775	1854	1813
92	1796	1792	136197	136676	-0.35%	1777	1857	1818
93	1798	1793	137922	138385	-0.33%	1778	1858	1817
94	1800	1796	139648	140094	-0.32%	1780	1860	1817
95	1803	1799	141377	141803	-0.30%	1784	1865	1826
96	1805	1800	143108	143511	-0.28%	1786	1866	1828
97	1807	1801	144841	145220	-0.26%	1789	1868	1829
98	1809	1803	146575	146929	-0.24%	1791	1872	1833
99	1812	1808	148312	148638	-0.22%	1795	1877	1836
100	1814	1813	150055	150346	-0.19%	1799	1880	1844
101	1816	1816	151801	152055	-0.17%	1803	1884	1845
102	1818	1819	153551	153764	-0.14%	1805	1885	1848
103	1820	1820	155302	155473	-0.11%	1808	1887	1854
104	1823	1821	157055	157181	-0.08%	1810	1888	1855
105	1825	1824	158809	158890	-0.05%	1813	1893	1855
106	1827	1827	160566	160674	-0.07%	1815	1897	1855
107	1829	1829	162326	162458	-0.08%	1819	1899	1859
108	1831	1830	164087	164242	-0.09%	1818	1900	1863
109	1833	1832	165851	166026	-0.11%	1823	1902	1867
110	1835	1834	167615	167810	-0.12%	1825	1904	1868
111	1836	1835	169382	169594	-0.13%	1826	1906	1871
112	1838	1837	171150	171378	-0.13%	1829	1910	1874
113	1839	1838	172919	173162	-0.14%	1833	1911	1876
114	1840	1838	174689	174946	-0.15%	1834	1910	1877
115	1841	1841	176461	176730	-0.15%	1835	1913	1877
116	1843	1844	178236	178514	-0.16%	1834	1914	1867
117	1844	1849	180014	180298	-0.16%	1838	1917	1875
118	1845	1850	181796	182082	-0.16%	1842	1920	1883
119	1846	1851	183578	183866	-0.16%	1840	1919	1886
120	1848	1853	185362	185650	-0.15%	1841	1922	1886
121	1849	1855	187149	187434	-0.15%	1843	1924	1888
122	1850	1856	188936	189218	-0.15%	1845	1925	1888
123	1851	1858	190726	191002	-0.14%	1849	1928	1890
124	1853	1861	192517	192786	-0.14%	1853	1931	1892
125	1854	1862	194311	194570	-0.13%	1854	1932	1897
126	1855	1865	196106	196354	-0.13%	1856	1933	1899
127	1856	1868	197905	198138	-0.12%	1859	1936	1902
128	1858	1869	199705	199922	-0.11%	1862	1937	1904
129	1859	1870	201507	201706	-0.10%	1862	1936	1900
130	1860	1870	203308	203490	-0.09%	1863	1938	1901
131	1861	1871	205111	205274	-0.08%	1867	1940	1904

Time (min)	E119 Std Average (°F)	Furnace Average (°F)	Integration of Furnace Average (°F•min)	Integration of E119 Std Average (°F•min)	Error (%)	Furnace Probe #1 (°F)	Furnace Probe #2 (°F)	Furnace Probe #3 (°F)
132	1863	1874	206915	207058	-0.07%	1869	1942	1906
133	1864	1875	208722	208842	-0.06%	1870	1940	1909
134	1865	1875	210528	210626	-0.05%	1870	1942	1907
135	1866	1874	212335	212410	-0.04%	1871	1941	1903
136	1868	1873	214140	214194	-0.03%	1869	1938	1904
137	1869	1872	215944	215978	-0.02%	1868	1938	1902
138	1870	1874	217749	217762	-0.01%	1869	1940	1906
139	1871	1875	219555	219546	0.00%	1871	1942	1907
140	1873	1876	221362	221330	0.01%	1871	1940	1902
141	1874	1877	223170	223181	0.00%	1871	1941	1904
142	1875	1878	224979	225032	-0.02%	1873	1944	1905
143	1877	1878	226789	226883	-0.04%	1870	1941	1905
144	1878	1880	228600	228733	-0.06%	1872	1945	1908
145	1879	1881	230412	230584	-0.07%	1876	1945	1908
146	1880	1882	232226	232435	-0.09%	1876	1946	1905
147	1882	1880	234039	234286	-0.11%	1874	1944	1905
148	1883	1880	235851	236137	-0.12%	1873	1945	1903
149	1884	1880	237664	237988	-0.14%	1875	1945	1903
150	1885	1882	239477	239839	-0.15%	1876	1947	1906
151	1887	1884	241292	241689	-0.16%	1878	1948	1907
152	1888	1885	243108	243540	-0.18%	1880	1949	1911
153	1889	1887	244925	245391	-0.19%	1883	1951	1913
154	1890	1889	246745	247242	-0.20%	1885	1954	1912
155	1892	1890	248567	249093	-0.21%	1886	1955	1917
156	1893	1892	250390	250944	-0.22%	1885	1957	1921
157	1894	1893	252214	252795	-0.23%	1884	1954	1920
158	1895	1893	254039	254645	-0.24%	1884	1954	1920
159	1897	1893	255864	256496	-0.25%	1884	1955	1921
160	1898	1894	257689	258347	-0.25%	1885	1955	1920
161	1899	1894	259515	260198	-0.26%	1887	1957	1924
162	1900	1895	261342	262049	-0.27%	1887	1958	1925
163	1902	1897	263170	263900	-0.28%	1891	1961	1922
164	1903	1901	265001	265751	-0.28%	1895	1964	1925
165	1904	1903	266835	267601	-0.29%	1899	1966	1927
166	1905	1904	268671	269452	-0.29%	1899	1966	1927
167	1907	1904	270507	271303	-0.29%	1899	1966	1928
168	1908	1905	272343	273154	-0.30%	1900	1969	1930
169	1909	1907	274181	275005	-0.30%	1902	1970	1931
170	1910	1909	276021	276856	-0.30%	1905	1972	1933
171	1912	1909	277862	278707	-0.30%	1905	1971	1929
172	1913	1907	279702	280557	-0.30%	1905	1971	bad TC
173	1914	1905	281540	282408	-0.31%	1904	1971	bad TC
174	1915	1906	283378	284259	-0.31%	1906	1973	bad TC
175	1917	1912	285219	286110	-0.31%	1911	1979	bad TC

Time (min)	E119 Std Average (°F)	Furnace Average (°F)	Integration of Furnace Average (°F•min)	Integration of E119 Std Average (°F•min)	Error (%)	Furnace Probe #1 (°F)	Furnace Probe #2 (°F)	Furnace Probe #3 (°F)
176	1918	1918	287066	287961	-0.31%	1915	1985	bad TC
177	1919	1922	288918	289812	-0.31%	1920	1988	bad TC
178	1921	1922	290772	291663	-0.31%	1921	1990	bad TC
179	1922	1923	292626	293513	-0.30%	1923	1991	bad TC
180	1923	1922	294480	295364	-0.30%	1924	1994	bad TC

Time (min)	Furnace Probe #4 (°F)	Furnace Probe #5 (°F)	Furnace Probe #6 (°F)	Furnace Probe #7 (°F)	Furnace Probe #8 (°F)	Furnace Probe #9 (°F)	Furnace Probe #10 (°F)	Furnace Probe #11 (°F)
0	65	68	69	69	68	69	70	69
1		177	120	218	293	137	135	146
2	541	696	373	855	868	412	472	529
3	817	961	638	990	978	664	755	817
4	891	976	773	989	996	773	836	876
5	960	1027	901	1072	1126	889	932	966
6	1052	1122	1035	1186	1271	1008	1047	1069
7	1148	1223	1136	1261	1337	1105	1145	1163
8	1203	1281	1194	1290	1347	1157	1196	1214
9	1240	1316	1228	1310	1357	1191	1228	1247
10	1263	1345	1255	1333	1362	1220	1256	1282
11	1284	1366	1279	1350	1373	1245	1280	1309
12	1303	1385	1297	1364	1390	1267	1300	1328
13	1321	1400	1315	1383	1409	1285	1322	1351
14	1341	1420	1332	1403	1430	1305	1343	1373
15	1359	1441	1347	1423	1448	1324	1360	1392
16	1377	1456	1361	1440	1464	1339	1378	1412
17	1392	1473	1374	1454	1479	1353	1394	1431
18	1407	1488	1387	1467	1493	1367	1410	1445
19	1421	1502	1401	1481	1503	1382	1426	1459
20	1435	1516	1415	1494	1517	1395	1440	1471
21	1449	1529	1426	1505	1525	1405	1453	1484
22	1460	1541	1438	1512	1534	1418	1463	1494
23	1465	1545	1445	1515	1535	1426	1470	1499
24	1469	1550	1450	1521	1542	1432	1476	1505
25	1474	1556	1456	1526	1551	1440	1483	1510
26	1484	1565	1464	1536	1561	1448	1494	1520
27	1493	1574	1472	1546	1568	1459	1505	1529
28	1501	1581	1482	1553	1575	1468	1516	1537
29	1509	1587	1488	1560	1583	1477	1525	1547
30	1516	1595	1494	1567	1589	1484	1533	1553
31	1522	1601	1502	1572	1597	1492	1541	1560
32	1528	1607	1507	1579	1602	1499	1548	1568
33	1537	1618	1516	1587	1609	1509	1557	1577
34	1544	1629	1523	1594	1619	1516	1564	1586
35	1552	1633	1529	1600	1626	1524	1572	1594
36	1559	1639	1534	1606	1632	1532	1578	1600
37	1565	1646	1539	1610	1636	1537	1583	1606
38	1570	1651	1546	1616	1640	1544	1588	1610
39	1573	1655	1551	1621	1647	1549	1592	1614
40	1578	1659	1555	1625	1652	1554	1596	1620
41	1584	1661	1558	1629	1654	1558	1600	1625
42	1591	1668	1563	1635	1664	1564	1606	1634
43	1597	1676	1570	1643	1668	1573	1614	1640

Time (min)	Furnace Probe #4 (°F)	Furnace Probe #5 (°F)	Furnace Probe #6 (°F)	Furnace Probe #7 (°F)	Furnace Probe #8 (°F)	Furnace Probe #9 (°F)	Furnace Probe #10 (°F)	Furnace Probe #11 (°F)
44	1603	1684	1577	1650	1675	1579	1620	1649
45	1610	1688	1583	1657	1682	1585	1627	1654
46	1616	1692	1588	1662	1686	1590	1631	1662
47	1621	1696	1593	1666	1692	1595	1637	1666
48	1627	1702	1596	1671	1698	1601	1643	1671
49	1633	1704	1601	1675	1701	1606	1649	1675
50	1637	1710	1605	1677	1700	1610	1653	1678
51	1642	1715	1609	1679	1703	1614	1656	1681
52	1647	1718	1612	1681	1707	1619	1659	1685
53	1653	1725	1614	1680	1706	1622	1661	1689
54	1654	1728	1619	1684	1708	1624	1665	1694
55	1656	1730	1622	1689	1712	1628	1669	1694
56	1660	1731	1624	1692	1717	1630	1672	1700
57	1664	1736	1627	1696	1718	1634	1674	1704
58	1668	1741	1631	1697	1723	1638	1677	1708
59	1677	1749	1636	1702	1727	1644	1683	1714
60	1682	1753	1641	1709	1730	1649	1690	1721
61	1687	1756	1646	1716	1736	1655	1696	1728
62	1689	1760	1650	1719	1738	1659	1701	1730
63	1695	1762	1653	1721	1746	1664	1705	1735
64	1700	1767	1656	1724	1749	1669	1708	1739
65	1702	1771	1659	1726	1751	1670	1709	1741
66	1704	1772	1663	1729	1754	1673	1712	1743
67	1707	1775	1664	1729	1754	1675	1714	1746
68	1710	1778	1668	1733	1757	1678	1717	1749
69	1714	1781	1671	1736	1757	1681	1720	1753
70	1717	1783	1675	1739	1761	1684	1724	1756
71	1720	1786	1677	1742	1762	1687	1726	1757
72	1722	1790	1679	1745	1769	1691	1730	1761
73	1725	1791	1681	1747	1771	1694	1732	1767
74	1729	1793	1684	1749	1774	1697	1735	1768
75	1734	1798	1686	1749	1772	1699	1736	1772
76	1739	1800	1689	1753	1778	1702	1740	1776
77	1746	1807	1692	1754	1781	1706	1742	1785
78	1750	1812	1695	1757	1780	1709	1745	1788
79	1753	1813	1698	1761	1783	1712	1749	1791
80	1755	1814	1702	1766	1786	1715	1753	1791
81	1757	1818	1705	1767	1792	1719	1755	1793
82	1759	1819	1708	1770	1793	1721	1759	1798
83	1763	1820	1710	1773	1795	1724	1761	1801
84	1765	1826	1710	1771	1795	1726	1761	1804
85	1766	1826	1711	1773	1796	1726	1763	1803
86	1766	1828	1715	1779	1801	1730	1767	1806
87	1768	1829	1717	1778	1799	1730	1768	1808

Time (min)	Furnace Probe #4 (°F)	Furnace Probe #5 (°F)	Furnace Probe #6 (°F)	Furnace Probe #7 (°F)	Furnace Probe #8 (°F)	Furnace Probe #9 (°F)	Furnace Probe #10 (°F)	Furnace Probe #11 (°F)
88	1771	1831	1717	1779	1800	1733	1770	1812
89	1777	1832	1718	1777	1799	1735	1769	1816
90	1780	1836	1718	1776	1801	1736	1769	1819
91	1782	1836	1722	1784	1807	1738	1774	1817
92	1786	1839	1725	1785	1808	1740	1774	1821
93	1784	1842	1727	1787	1811	1743	1777	1823
94	1786	1843	1731	1792	1814	1746	1782	1822
95	1791	1846	1731	1789	1811	1747	1781	1830
96	1792	1849	1730	1789	1814	1748	1782	1830
97	1795	1851	1731	1787	1810	1749	1781	1833
98	1799	1852	1733	1789	1813	1752	1783	1835
99	1801	1857	1740	1799	1820	1755	1789	1839
100	1807	1858	1744	1803	1822	1759	1793	1845
101	1810	1865	1749	1807	1827	1762	1796	1848
102	1812	1870	1751	1809	1829	1766	1798	1848
103	1817	1867	1751	1807	1826	1767	1798	1854
104	1819	1873	1750	1804	1823	1766	1797	1857
105	1819	1874	1755	1810	1831	1768	1800	1855
106	1821	1878	1758	1814	1835	1772	1804	1858
107	1823	1879	1761	1815	1836	1774	1806	1860
108	1827	1884	1761	1815	1834	1776	1807	1863
109	1832	1887	1762	1814	1831	1775	1806	1866
110	1832	1887	1764	1815	1834	1777	1807	1869
111	1834	1890	1765	1817	1835	1777	1809	1869
112	1837	1892	1763	1815	1834	1779	1810	1871
113	1839	1889	1765	1816	1835	1779	1810	1874
114	1841	1892	1765	1815	1833	1779	1810	1874
115	1840	1897	1769	1820	1839	1783	1815	1877
116	1831	1900	1779	1836	1854	1792	1826	1872
117	1837	1893	1783	1841	1861	1798	1831	1878
118	1846	1905	1781	1833	1853	1798	1827	1881
119	1849	1909	1783	1833	1851	1797	1826	1882
120	1850	1912	1784	1836	1855	1800	1829	1885
121	1851	1913	1786	1839	1857	1802	1832	1887
122	1853	1911	1786	1839	1855	1803	1833	1890
123	1854	1913	1790	1843	1859	1807	1835	1887
124	1857	1915	1792	1845	1861	1810	1837	1887
125	1860	1917	1793	1843	1858	1810	1838	1891
126	1863	1922	1795	1846	1862	1814	1841	1895
127	1865	1925	1798	1850	1865	1816	1843	1899
128	1869	1926	1799	1849	1865	1816	1844	1902
129	1865	1928	1800	1852	1869	1818	1848	1900
130	1866	1925	1799	1852	1866	1817	1848	1902
131	1870	1920	1801	1852	1867	1818	1849	1906

Time (min)	Furnace Probe #4 (°F)	Furnace Probe #5 (°F)	Furnace Probe #6 (°F)	Furnace Probe #7 (°F)	Furnace Probe #8 (°F)	Furnace Probe #9 (°F)	Furnace Probe #10 (°F)	Furnace Probe #11 (°F)
132	1872	1928	1803	1854	1868	1821	1851	1909
133	1873	1930	1804	1852	1869	1821	1851	1910
134	1872	1930	1804	1856	1872	1822	1852	1908
135	1870	1929	1804	1855	1869	1822	1853	1908
136	1872	1929	1803	1851	1866	1818	1849	1908
137	1870	1928	1803	1853	1866	1816	1849	1904
138	1873	1929	1804	1853	1866	1819	1850	1908
139	1875	1930	1805	1854	1867	1821	1851	1910
140	1870	1930	1808	1862	1873	1826	1856	1906
141	1872	1931	1808	1861	1875	1827	1856	1908
142	1874	1931	1810	1862	1874	1828	1857	1909
143	1874	1931	1811	1864	1878	1829	1859	1908
144	1877	1932	1812	1862	1879	1830	1859	1911
145	1877	1933	1813	1866	1881	1833	1862	1912
146	1875	1936	1815	1870	1883	1835	1865	1911
147	1877	1936	1813	1864	1878	1832	1862	1912
148	1873	1931	1815	1867	1879	1834	1863	1908
149	1872	1933	1817	1868	1879	1834	1865	1907
150	1875	1935	1817	1869	1882	1834	1865	1908
151	1877	1936	1818	1869	1883	1836	1867	1913
152	1880	1935	1819	1869	1882	1835	1865	1916
153	1881	1939	1821	1871	1885	1838	1868	1917
154	1882	1941	1824	1875	1888	1841	1871	1917
155	1886	1941	1824	1872	1888	1842	1871	1922
156	1889	1933	1827	1875	1889	1844	1873	1924
157	1890	1946	1828	1877	1892	1845	1875	1925
158	1888	1947	1827	1876	1891	1845	1875	1924
159	1888	1942	1826	1875	1892	1845	1875	1926
160	1889	1944	1828	1878	1894	1847	1877	1928
161	1893	1946	1828	1872	1888	1845	1875	1929
162	1895	1948	1829	1873	1889	1845	1875	1930
163	1895	1946	1833	1880	1893	1849	1879	1931
164	1896	1949	1837	1884	1900	1852	1883	1933
165	1898	1955	1838	1884	1901	1855	1884	1936
166	1898	1956	1839	1887	1904	1855	1885	1936
167	1898	1954	1840	1888	1905	1855	1886	1935
168	1901	1953	1842	1887	1905	1857	1887	1937
169	1902	1959	1843	1887	1904	1855	1887	1942
170	1904	1960	1846	1892	1908	1860	1890	1942
171	1902	1963	1846	1894	1907	1861	1892	1941
172	1903	1964	1845	1890	1905	1861	1889	1944
173	1904	1961	1843	1887	1903	1856	1884	1942
174	1906	1959	1844	1889	1906	1857	1886	1943
175	1909	1963	1851	1899	1915	1865	1895	1945

Time (min)	Furnace Probe #4 (°F)	Furnace Probe #5 (°F)	Furnace Probe #6 (°F)	Furnace Probe #7 (°F)	Furnace Probe #8 (°F)	Furnace Probe #9 (°F)	Furnace Probe #10 (°F)	Furnace Probe #11 (°F)
176	1913	1967	1856	1905	1923	1870	1900	1951
177	1919	1975	1859	1908	1926	1874	1904	1958
178	1922	1972	1859	1903	1921	1872	1902	1959
179	1925	1981	1858	1901	1917	1870	1901	1962
180	1927	1975	1858	1897	1915	1868	1899	1961

Time (min)	Furnace Probe #12 (°F)	Lab Ambient (°F)
0	69	66
1	136	66
2	402	66
3	621	66
4	728	66
5	830	66
6	946	66
7	1057	66
8	1131	66
9	1180	66
10	1214	66
11	1239	66
12	1261	66
13	1286	66
14	1311	66
15	1333	66
16	1353	66
17	1371	66
18	1385	66
19	1399	66
20	1413	66
21	1428	66
22	1440	66
23	1447	66
24	1452	66
25	1458	66
26	1467	66
27	1477	66
28	1484	66
29	1493	66
30	1500	66
31	1507	66
32	1514	66
33	1521	66
34	1529	66
35	1537	66
36	1545	66
37	1551	66
38	1556	66
39	1560	66
40	1565	66
41	1571	66
42	1577	66
43	1584	66

Time (min)	Furnace Probe #12 (°F)	Lab Ambient (°F)
44	1591	66
45	1598	66
46	1605	66
47	1609	66
48	1614	66
49	1619	66
50	1624	66
51	1627	67
52	1633	67
53	1637	67
54	1640	67
55	1643	67
56	1647	67
57	1650	67
58	1654	67
59	1662	67
60	1668	67
61	1674	67
62	1677	67
63	1683	67
64	1688	67
65	1690	67
66	1692	67
67	1696	67
68	1698	67
69	1703	68
70	1706	68
71	1708	68
72	1711	67
73	1715	68
74	1718	68
75	1722	68
76	1727	68
77	1733	68
78	1737	68
79	1740	68
80	1742	68
81	1744	68
82	1748	68
83	1752	69
84	1754	69
85	1754	69
86	1756	69
87	1759	69

Time (min)	Furnace Probe #12 (°F)	Lab Ambient (°F)
88	1762	69
89	1766	69
90	1768	69
91	1770	69
92	1772	69
93	1773	69
94	1775	70
95	1781	70
96	1783	70
97	1784	70
98	1787	70
99	1791	70
100	1797	70
101	1801	70
102	1802	71
103	1807	71
104	1809	71
105	1810	71
106	1812	71
107	1814	71
108	1817	71
109	1820	71
110	1822	71
111	1823	71
112	1825	71
113	1828	72
114	1829	71
115	1830	71
116	1827	71
117	1831	71
118	1836	72
119	1838	72
120	1839	72
121	1841	72
122	1844	72
123	1846	72
124	1849	72
125	1852	72
126	1855	72
127	1857	72
128	1860	72
129	1857	72
130	1858	72
131	1861	72

Time (min)	Furnace Probe #12 (°F)	Lab Ambient (°F)
132	1864	72
133	1865	72
134	1864	72
135	1863	72
136	1863	72
137	1863	72
138	1865	72
139	1867	72
140	1863	72
141	1865	72
142	1865	72
143	1865	72
144	1868	72
145	1869	72
146	1869	72
147	1868	72
148	1867	72
149	1867	72
150	1869	72
151	1872	72
152	1874	72
153	1876	72
154	1877	72
155	1878	72
156	1881	73
157	1882	73
158	1883	73
159	1884	73
160	1885	73
161	1886	73
162	1887	73
163	1888	73
164	1891	74
165	1894	73
166	1894	73
167	1894	74
168	1896	74
169	1897	74
170	1899	74
171	1899	74
172	1899	74
173	1898	74
174	1900	74
175	1905	74

Time (min)	Furnace Probe #12 (°F)	Lab Ambient (°F)
176	1909	74
177	1914	74
178	1918	74
179	1919	74
180	1920	74

Time (min)	TC #1	TC #2	TC #3	TC #4	TC #5	TC #6	TC #7	TC #8	TC #9	TC #10	TC #11	TC #12	TC #13	TC #14
0	68	70	72	72	72	68	73	73	73	73	73	73	73	73
1	68	70	72	72	72	70	73	73	73	73	73	72	73	73
2	68	70	72	72	72	68	73	73	73	73	73	73	73	73
3	68	70	72	72	72	68	73	73	73	73	73	73	73	73
4	68	70	72	72	72	68	73	73	73	73	73	73	73	73
5	68	70	72	72	72	70	73	73	73	73	73	73	73	73
6	68	70	72	72	72	70	73	73	73	73	73	73	73	73
7	68	70	72	72	72	70	72	73	73	73	73	72	73	73
8	68	70	72	72	72	72	73	73	73	73	73	73	73	73
9	68	70	72	72	72	70	73	73	73	73	73	73	73	73
10	68	70	72	72	72	73	73	73	73	73	73	73	73	73
11	68	70	72	72	72	70	73	73	73	73	73	73	73	73
12	68	70	72	72	72	70	72	73	73	73	73	73	73	73
13	68	70	72	72	72	70	73	73	73	73	73	73	73	73
14	68	70	72	72	72	70	73	73	73	73	73	73	73	73
15	68	70	70	72	72	68	72	73	73	73	73	73	73	73
16	68	70	72	72	72	70	73	73	73	73	73	73	73	73
17	68	70	72	72	72	68	72	73	73	73	73	73	73	73
18	68	70	70	72	73	68	73	72	73	73	73	73	73	73
19	68	70	70	72	72	68	72	73	73	73	73	73	73	73
20	70	70	72	72	72	68	73	73	73	73	73	73	75	73
21	68	70	72	72	73	68	73	73	73	73	73	73	75	73
22	68	70	72	72	72	70	73	73	73	75	73	73	75	73
23	68	70	72	72	72	70	73	73	73	75	73	73	75	73
24	68	70	72	72	73	70	73	73	73	73	73	73	75	75
25	68	70	72	72	73	73	73	73	75	73	73	75	75	75
26	68	70	72	72	73	73	73	73	75	73	75	75	77	75
27	68	70	72	73	73	73	73	73	75	75	73	75	77	75
28	68	70	72	72	73	73	75	75	75	75	75	75	77	77
29	68	70	72	72	73	75	75	75	75	75	75	75	79	77
30	68	70	72	73	73	73	75	75	75	75	75	77	79	77
31	68	70	72	73	73	75	75	75	75	77	75	77	79	77
32	68	70	73	75	75	75	75	75	77	75	77	77	79	79
33	68	72	73	73	75	73	75	77	77	77	77	77	81	79
34	68	70	73	73	75	75	77	77	77	77	77	79	82	79
35	68	72	73	75	75	77	77	77	77	77	79	79	82	81
36	68	70	73	75	75	77	77	79	77	79	79	81	82	81
37	68	72	73	75	75	77	79	79	79	79	79	81	84	82
38	68	72	73	75	77	79	79	79	79	79	79	82	86	82
39	68	72	73	75	77	77	79	79	81	81	81	82	86	84
40	68	72	75	75	77	81	81	81	81	79	81	82	88	84
41	68	72	75	77	79	81	81	81	81	82	81	84	90	84
42	68	72	75	77	79	82	81	81	82	81	82	84	91	86
43	68	72	75	77	81	81	82	82	82	82	84	86	91	88
44	68	72	77	79	81	82	82	82	84	82	84	86	93	88
45	70	72	77	79	81	81	84	84	84	84	84	88	95	90

Time (min)	TC #1	TC #2	TC #3	TC #4	TC #5	TC #6	TC #7	TC #8	TC #9	TC #10	TC #11	TC #12	TC #13	TC #14
46	68	73	77	81	81	84	84	84	86	84	86	90	97	91
47	68	73	79	81	82	77	86	86	86	86	86	91	97	93
48	68	73	79	82	84	84	86	86	88	86	88	91	100	95
49	70	73	81	82	84	88	88	88	90	88	90	93	102	95
50	70	73	81	84	86	86	90	90	90	90	90	95	104	97
51	70	75	82	84	86	84	90	90	91	90	91	97	106	99
52	70	75	82	84	88	90	91	91	91	91	93	97	108	100
53	70	75	82	88	88	91	93	93	93	91	93	100	109	102
54	70	75	84	88	90	93	93	93	93	93	95	102	111	104
55	70	77	84	90	91	93	95	95	95	95	97	104	113	106
56	70	77	86	91	93	91	97	97	97	97	99	106	115	108
57	70	77	86	91	93	91	99	99	99	97	100	108	118	109
58	70	79	88	93	95	91	99	100	100	99	102	109	120	113
59	72	79	88	95	97	100	100	100	102	100	104	111	122	115
60	70	79	90	97	97	91	102	102	104	102	104	113	126	117
61	72	79	91	97	99	93	104	104	104	104	108	115	127	118
62	72	81	93	99	100	95	104	106	108	106	109	117	129	120
63	72	82	93	100	102	93	106	108	108	108	111	120	133	124
64	72	82	95	102	104	99	108	109	111	109	111	122	135	126
65	72	82	97	104	106	97	111	111	111	111	115	124	136	127
66	73	84	97	106	108	99	111	111	113	113	115	126	140	129
67	73	84	99	108	109	100	115	115	115	115	118	129	142	133
68	72	86	100	109	111	99	117	117	117	115	120	131	145	135
69	73	86	102	111	115	102	118	118	118	118	122	133	147	136
70	73	88	102	113	117	100	120	120	122	120	124	136	151	138
71	73	88	104	115	118	106	122	122	122	122	126	138	154	142
72	73	88	106	117	122	104	126	126	126	124	129	140	156	144
73	73	90	108	118	124	108	127	127	126	126	131	144	158	147
74	75	90	108	120	126	109	129	129	129	129	133	145	162	149
75	75	91	111	124	129	111	133	131	131	129	135	149	165	153
76	75	93	111	126	133	118	135	133	133	133	138	151	167	154
77	75	93	113	127	135	118	136	136	136	135	138	154	171	156
78	77	95	115	129	136	120	140	138	138	136	142	156	174	160
79	77	97	117	133	140	120	142	140	140	138	144	160	178	162
80	77	97	118	135	142	120	144	144	144	140	145	162	181	165
81	79	99	120	138	144	124	147	145	145	144	147	165	183	167
82	79	100	122	140	147	129	149	147	145	145	151	169	187	171
83	79	100	124	142	149	124	153	149	149	147	153	171	190	172
84	79	102	126	144	153	133	154	153	153	149	154	174	196	176
85	79	104	127	147	154	135	158	154	153	153	158	178	199	178
86	81	104	129	149	158	136	160	156	156	154	160	180	203	180
87	82	106	131	151	158	140	163	158	158	156	162	185	207	181
88	82	108	133	153	162	140	167	162	162	160	165	187	210	185
89	82	108	135	154	165	140	169	163	162	162	167	190	216	189
90	84	109	136	158	165	149	171	167	165	163	169	194	221	192
91	82	111	138	160	167	151	172	169	167	167	172	198	226	194

Time (min)	TC #1	TC #2	TC #3	TC #4	TC #5	TC #6	TC #7	TC #8	TC #9	TC #10	TC #11	TC #12	TC #13	TC #14
92	84	111	140	162	171	147	176	171	169	169	174	201	230	198
93	84	113	144	163	172	151	178	172	172	171	178	205	237	201
94	86	115	145	167	176	149	180	174	174	174	180	208	243	205
95	86	115	145	169	178	151	183	176	176	176	183	212	250	208
96	86	118	147	171	180	153	185	180	180	178	187	217	255	212
97	88	118	151	172	181	151	187	183	181	181	189	223	262	217
98	90	118	151	174	183	136	189	185	183	183	192	226	270	221
99	90	122	153	176	185	138	190	187	187	185	194	230	277	225
100	90	122	154	180	187	151	194	190	189	189	198	235	284	228
101	90	124	156	181	190	154	196	190	190	192	199	241	293	234
102	91	126	158	183	190	162	198	194	194	194	203	246	300	237
103	91	127	160	185	194	156	199	198	196	196	205	252	307	243
104	91	129	162	187	196	165	201	199	198	199	208	257	315	248
105	93	129	163	190	198	156	203	201	201	201	212	262	324	252
106	95	131	167	192	198	165	205	203	203	205	216	268	331	257
107	95	133	169	194	201	169	207	205	205	207	217	273	340	262
108	97	133	171	196	203	158	208	208	207	208	221	279	347	268
109	97	136	172	198	205	154	208	208	208	212	225	284	356	262
110	99	136	174	199	207	171	210	210	212	214	226	291	363	268
111	99	138	176	203	208	167	212	212	214	217	230	297	372	309
112	99	140	180	205	210	203	212	216	216	221	234	302	379	316
113	100	142	183	208	212	176	212	217	219	223	237	307	388	325
114	100	144	187	208	212	167	214	219	221	225	241	315	396	342
115	102	145	192	210	214	178	216	219	225	228	244	320	405	349
116	104	147	198	210	212	207	217	223	226	232	246	325	414	345
117	104	149	201	212	214	192	221	226	230	234	250	333	423	347
118	106	151	205	212	214	187	223	228	232	235	253	338	430	361
119	106	153	207	212	216	181	225	230	234	239	257	345	439	345
120	108	156	207	214	217	198	226	234	237	241	261	351	448	352
121	108	158	207	214	219	187	228	235	239	244	264	358	457	383
122	109	160	207	217	219	207	230	237	241	248	268	363	466	363
123	109	163	207	219	223	190	234	241	244	250	271	370	475	372
124	111	165	208	221	223	190	235	243	246	253	275	378	484	343
125	113	167	207	223	225	192	237	244	250	255	279	385	493	392
126	113	169	207	226	226	190	239	248	252	259	282	390	502	385
127	115	169	208	228	228	198	243	250	255	262	286	397	511	394
128	117	171	207	230	232	207	244	253	257	264	289	405	522	529
129	117	171	207	232	234	201	248	255	261	268	295	412	529	518
130	118	172	207	234	235	214	250	259	264	271	297	419	540	550
131	118	172	208	234	237	216	252	262	266	273	302	424	547	685
132	120	174	207	237	241	203	253	264	270	277	306	432	558	685
133	120	174	208	239	243	207	257	266	273	280	309	439	565	747
134	122	174	208	241	244	201	259	270	275	284	313	446	574	734
135	122	176	210	243	248	214	262	273	279	288	318	453	583	759
136	124	176	212	244	250	210	264	277	282	291	322	460	592	768
137	126	178	214	248	252	212	268	279	284	293	325	468	601	745

Time (min)	TC #1	TC #2	TC #3	TC #4	TC #5	TC #6	TC #7	TC #8	TC #9	TC #10	TC #11	TC #12	TC #13	TC #14
138	126	180	214	250	255	219	270	282	288	297	331	473	610	658
139	126	180	216	252	257	253	271	286	291	300	334	482	619	732
140	127	181	217	253	261	243	275	288	295	304	340	487	628	693
141	129	183	219	257	262	261	277	291	297	307	343	495	635	792
142	129	183	223	259	264	255	280	295	300	311	349	502	644	795
143	131	183	225	261	268	257	284	297	304	315	352	509	655	801
144	131	185	226	262	270	244	286	300	307	318	356	514	664	806
145	133	185	228	266	271	259	289	302	311	322	361	522	673	763
146	133	185	230	268	275	253	291	306	313	325	367	531	691	682
147	135	185	232	270	277	246	295	309	316	329	370	538	772	687
148	135	185	234	273	280	280	298	313	320	334	376	545	781	712
149	136	187	235	277	282	248	300	316	324	338	381	552	784	833
150	136	187	237	279	286	248	304	320	327	342	385	559	793	828
151	136	189	239	280	288	275	306	322	331	345	390	568	801	835
152	138	189	241	284	291	261	309	325	334	349	396	576	808	853
153	138	190	243	286	293	250	313	329	340	354	401	583	819	846
154	140	192	244	288	297	277	316	333	343	358	406	592	831	844
155	140	194	246	291	298	280	320	336	347	363	412	599	842	864
156	142	194	248	293	302	282	324	340	351	367	417	608	849	878
157	142	196	250	295	304	239	327	342	354	372	423	617	813	853
158	144	198	252	298	307	257	329	345	358	376	428	624	806	871
159	144	199	253	302	311	268	334	349	361	381	433	631	804	891
160	144	199	255	304	313	293	338	352	367	385	439	640	763	853
161	145	201	257	306	316	268	342	356	370	390	444	648	784	860
162	145	203	259	309	320	262	345	360	374	396	451	657	808	835
163	147	205	262	311	324	300	349	363	378	401	457	664	900	828
164	147	205	264	315	325	280	352	367	383	405	464	673	912	756
165	149	207	266	318	329	309	356	372	387	410	469	682	921	777
166	149	208	268	320	333	239	360	374	390	415	477	691	921	761
167	151	210	271	324	336	248	365	379	396	421	484	700	936	900
168	151	212	273	327	338	248	369	383	399	426	491	709	939	811
169	153	214	277	329	342	246	372	387	405	432	496	750	936	856
170	153	216	279	333	345	253	378	390	408	437	504	714	934	727
171	154	217	280	336	349	255	381	396	414	444	511	718	943	734
172	154	219	284	342	352	261	385	399	419	450	518	696	954	752
173	156	221	288	345	356	309	390	403	423	455	525	703	986	763
174	158	223	293	349	360	293	394	406	428	460	532	732	1017	786
175	158	226	297	352	365	284	399	412	433	468	540	766	1036	784
176	158	228	300	356	367	309	403	415	437	473	549	743	993	793
177	160	230	304	360	372	311	408	421	442	478	554	720	1060	824
178	162	232	307	363	376	311	414	424	448	486	563	750	1065	820
179	162	234	311	369	379	324	417	430	453	491	570	729	1069	810
180	163	235	315	372	385	356	423	435	459	498	579	734	1072	880
Max Temp:	163	235	315	372	385	356	423	435	459	498	579	766	1072	900
Max Allowed:	393	395	397	397	397	393	398	398	398	398	398	398	398	398

Time (min)	TC #15	TC #16	TC #17	TC #18	TC #19	TC #20	TC #21	TC #22	TC #23	TC #24	TC #25	TC #26	TC #27
0	73	73	73	73	73	73	73	73	73	73	73	73	72
1	73	72	73	73	73	73	73	72	73	73	73	72	72
2	73	73	73	73	73	73	73	73	73	73	73	73	72
3	73	73	73	73	73	73	73	73	73	73	73	73	72
4	73	73	73	73	73	72	73	73	73	72	73	72	72
5	73	73	73	73	73	73	73	73	73	73	73	73	73
6	73	73	73	73	72	73	73	73	73	73	73	73	72
7	73	73	73	72	73	73	73	73	73	73	73	72	72
8	73	73	73	73	73	73	73	72	73	72	73	73	72
9	73	73	73	73	73	73	73	73	73	73	73	73	72
10	73	73	73	73	73	72	73	73	73	73	73	72	72
11	73	73	73	73	73	73	73	73	73	73	73	72	72
12	73	73	73	73	73	72	73	72	73	73	73	72	72
13	73	73	73	72	73	73	72	73	73	72	73	72	72
14	73	73	73	73	73	73	72	72	73	73	73	73	72
15	73	73	73	72	73	73	73	72	72	73	72	73	72
16	72	73	73	72	73	73	73	73	72	73	73	73	72
17	73	73	73	72	73	73	73	73	72	73	73	72	73
18	73	73	73	72	73	73	73	72	73	73	73	72	72
19	73	72	73	73	73	73	73	73	73	73	73	72	72
20	73	73	73	73	75	73	73	72	73	73	73	72	72
21	73	73	73	72	75	75	73	73	73	73	73	72	72
22	73	73	73	73	75	75	73	73	73	73	73	72	72
23	73	73	73	72	77	75	73	73	73	73	73	73	73
24	73	73	73	73	77	75	73	73	73	73	73	73	72
25	73	73	73	73	77	75	73	73	73	73	73	73	73
26	73	73	73	73	77	77	73	73	73	73	73	72	73
27	75	73	73	75	79	77	73	75	73	73	75	73	73
28	73	73	73	73	79	77	73	73	73	75	75	73	73
29	75	75	73	73	81	79	73	73	75	75	75	73	73
30	75	73	73	73	81	79	73	73	75	75	75	73	73
31	77	73	73	73	82	79	75	75	75	75	75	73	73
32	77	75	73	75	84	81	75	75	75	75	75	73	73
33	77	75	75	75	84	81	75	75	75	75	75	73	73
34	77	75	75	75	84	82	75	75	75	75	75	73	75
35	77	75	75	75	86	82	77	75	75	75	77	75	75
36	79	77	75	75	88	84	75	75	77	77	77	75	75
37	79	77	75	77	90	84	77	77	77	77	77	75	75
38	79	77	75	77	91	86	77	77	77	77	79	75	75
39	81	79	77	77	91	88	77	79	79	79	79	75	75
40	81	79	77	79	93	90	79	79	79	79	79	77	77
41	82	79	77	79	95	90	79	79	79	79	81	77	77
42	82	79	77	79	97	91	79	81	79	81	81	77	77
43	84	81	79	79	100	93	81	81	81	81	82	79	77
44	86	82	79	81	100	93	81	81	81	81	82	79	79
45	86	82	81	82	104	97	82	82	82	82	82	79	79

Time (min)	TC #15	TC #16	TC #17	TC #18	TC #19	TC #20	TC #21	TC #22	TC #23	TC #24	TC #25	TC #26	TC #27
46	86	82	81	82	106	99	82	82	82	82	84	81	79
47	88	84	81	82	108	100	82	84	82	84	86	81	81
48	90	86	82	84	109	102	84	84	84	86	86	82	81
49	91	86	82	84	111	104	86	86	86	86	86	82	81
50	91	88	84	86	115	106	86	86	86	86	88	84	84
51	93	88	84	88	117	108	86	86	88	88	90	84	84
52	93	90	86	88	118	109	88	90	88	90	90	86	84
53	97	91	86	90	122	111	90	90	90	90	91	86	84
54	99	91	88	90	124	113	91	91	90	91	93	88	86
55	99	93	90	91	126	117	91	91	91	93	95	88	88
56	100	95	90	93	129	117	93	93	93	93	95	90	88
57	102	97	91	95	131	120	95	95	93	97	97	91	90
58	104	99	93	97	135	122	97	97	95	97	99	91	91
59	108	100	93	97	136	124	99	97	97	99	100	93	91
60	109	102	95	100	140	126	99	99	99	100	100	95	93
61	111	104	97	100	142	129	100	100	100	100	104	97	93
62	113	106	99	102	144	131	102	102	102	104	104	97	97
63	115	106	100	104	147	133	104	104	104	104	106	99	99
64	117	109	102	106	149	135	106	106	104	108	108	100	99
65	118	111	104	108	153	138	108	108	106	109	109	102	100
66	122	113	106	109	154	140	109	109	109	109	111	104	102
67	124	115	106	111	158	144	111	111	109	113	113	106	102
68	126	117	109	113	160	145	113	113	111	115	115	108	106
69	127	118	111	115	162	147	115	115	113	117	117	108	106
70	131	120	113	117	165	151	118	117	115	118	118	111	108
71	133	124	113	118	167	153	118	118	117	120	120	111	109
72	135	126	117	120	171	154	122	120	118	122	122	113	111
73	136	127	118	124	172	156	126	122	122	124	124	115	113
74	140	131	120	124	176	158	126	124	122	126	126	117	117
75	142	133	122	127	178	162	127	126	126	127	127	118	117
76	144	135	124	129	181	163	129	127	126	129	129	122	118
77	145	136	127	131	183	165	133	131	129	131	133	124	120
78	149	138	129	133	185	167	135	133	131	133	133	126	122
79	151	142	131	136	189	171	136	135	133	136	136	127	124
80	154	144	133	138	190	172	138	136	135	138	138	129	126
81	158	147	135	140	192	174	142	138	136	140	140	131	129
82	160	149	136	142	194	178	144	140	138	142	142	133	131
83	162	151	140	145	198	180	145	144	142	145	144	135	133
84	165	154	142	147	201	181	147	144	144	147	145	138	135
85	167	156	144	149	203	183	151	147	145	149	149	138	136
86	169	160	145	151	205	187	151	149	149	153	151	142	138
87	172	162	147	154	208	189	154	151	149	154	153	144	140
88	174	165	151	156	210	190	156	154	151	156	154	145	144
89	178	167	153	158	212	194	158	156	154	158	158	147	145
90	180	171	154	160	214	196	162	158	156	162	158	151	147
91	181	172	158	163	217	198	163	160	158	163	162	153	149

Time (min)	TC #15	TC #16	TC #17	TC #18	TC #19	TC #20	TC #21	TC #22	TC #23	TC #24	TC #25	TC #26	TC #27
92	183	174	160	165	219	201	165	162	162	167	163	154	153
93	187	178	162	167	223	203	169	165	163	169	165	158	153
94	189	180	165	169	225	205	171	167	165	171	169	158	154
95	192	183	167	172	226	207	172	169	169	172	171	160	158
96	196	185	169	174	230	210	176	172	171	174	172	163	160
97	199	187	172	176	232	212	178	174	172	178	176	165	162
98	201	190	174	180	235	214	180	176	176	180	178	169	163
99	205	194	178	181	237	217	183	180	178	183	180	171	167
100	208	198	178	185	239	219	185	181	181	185	181	172	169
101	212	201	181	187	243	223	189	183	183	187	185	174	171
102	216	205	183	189	244	225	190	187	185	190	187	176	172
103	219	208	187	192	248	226	192	189	189	192	190	180	176
104	223	212	189	194	250	230	196	190	190	194	190	181	178
105	226	216	192	198	252	232	198	192	194	198	194	183	180
106	232	219	194	199	255	234	201	196	196	199	196	187	181
107	234	223	198	203	257	237	203	199	198	203	199	189	185
108	239	228	201	205	261	239	207	201	201	205	201	190	187
109	243	232	239	208	262	243	208	203	203	208	203	194	189
110	248	237	243	325	266	244	356	205	205	212	207	196	190
111	252	232	590	365	268	246	392	208	208	214	208	216	194
112	257	284	649	329	270	250	347	212	212	216	212	552	196
113	261	320	667	374	273	252	399	214	214	219	214	694	198
114	264	338	603	223	275	253	223	216	216	223	217	703	201
115	270	347	604	354	279	257	378	219	219	226	219	691	203
116	273	336	696	394	280	259	414	221	223	228	223	689	205
117	279	381	622	378	284	262	424	225	225	232	225	739	208
118	284	367	667	403	286	264	426	226	228	234	226	725	210
119	289	388	732	529	289	268	487	230	232	237	230	777	214
120	293	392	739	739	291	270	567	232	234	241	232	784	216
121	298	675	747	750	295	271	570	235	237	244	235	797	217
122	304	403	723	761	284	275	576	237	239	257	237	810	219
123	309	408	752	766	300	277	581	241	243	252	241	815	223
124	315	383	302	532	293	280	637	243	246	264	243	822	225
125	320	432	736	651	293	282	799	246	250	270	246	734	228
126	325	786	338	693	300	286	741	250	252	270	250	792	230
127	333	777	343	707	298	288	721	252	255	277	252	795	232
128	338	721	381	718	703	291	732	255	259	361	255	711	235
129	345	694	730	734	734	295	738	259	262	367	257	725	237
130	351	646	788	702	741	297	707	261	266	374	261	774	241
131	356	631	664	649	747	300	664	264	270	381	264	826	243
132	363	543	646	592	711	302	608	266	271	378	266	837	246
133	369	720	617	718	781	306	729	270	397	396	496	844	248
134	376	723	639	732	808	309	741	273	262	403	640	851	250
135	383	736	579	763	819	313	774	277	370	428	624	860	624
136	388	745	527	516	822	316	527	280	529	489	662	869	628
137	396	756	644	428	833	318	414	284	732	392	658	873	637

Time (min)	TC #15	TC #16	TC #17	TC #18	TC #19	TC #20	TC #21	TC #22	TC #23	TC #24	TC #25	TC #26	TC #27
138	405	761	619	307	842	322	306	288	399	331	669	878	640
139	410	765	667	493	844	325	518	291	381	435	702	885	644
140	417	774	765	489	846	514	514	293	396	763	720	887	628
141	424	781	613	383	851	527	387	297	604	707	723	900	649
142	432	783	792	498	849	534	523	300	703	775	709	903	651
143	441	788	855	712	851	540	509	304	725	720	711	903	662
144	448	757	869	743	853	543	666	309	752	766	716	896	669
145	455	775	889	696	801	630	675	313	777	432	777	883	678
146	462	792	867	709	788	352	684	316	844	768	810	878	687
147	509	801	916	698	815	576	534	320	849	853	680	867	696
148	585	810	846	714	847	361	696	324	847	864	790	871	705
149	619	822	563	831	849	604	840	417	864	693	781	876	714
150	682	804	473	856	864	712	649	333	865	781	792	885	725
151	628	795	873	793	871	648	828	648	878	826	799	880	734
152	639	779	745	792	874	655	608	649	883	835	802	883	747
153	630	649	568	804	882	676	756	734	896	849	797	864	757
154	691	635	448	801	883	597	550	631	898	846	793	817	766
155	747	640	862	815	891	720	649	622	905	849	793	864	777
156	745	649	615	829	891	752	684	626	907	867	788	878	788
157	745	666	786	808	889	682	777	622	919	842	783	770	777
158	747	667	738	793	905	754	804	667	921	867	804	676	775
159	766	662	797	756	912	747	797	721	934	862	797	738	783
160	770	684	860	777	916	795	820	707	925	862	822	680	792
161	784	680	977	750	921	858	817	696	945	896	815	693	797
162	815	680	991	730	912	894	819	727	984	914	824	711	801
163	793	693	997	795	930	883	846	736	993	905	811	747	810
164	790	702	1008	712	840	873	860	756	937	903	811	799	819
165	802	711	1033	716	671	721	914	777	937	846	824	783	828
166	810	720	1027	729	680	838	896	802	948	878	831	822	840
167	849	727	1029	865	774	892	936	817	986	838	851	840	853
168	874	730	1047	876	972	916	932	824	1004	799	876	838	853
169	885	741	833	896	1008	945	961	831	1015	838	891	873	855
170	914	750	925	901	1015	1031	979	840	1020	856	901	847	864
171	910	775	880	909	1022	1029	993	838	1045	874	887	824	869
172	891	748	864	916	1029	862	1006	788	1051	885	891	813	873
173	932	775	856	824	988	916	1026	790	1054	901	889	831	876
174	961	792	891	849	937	937	1027	759	1058	925	927	882	871
175	982	811	912	824	972	936	1042	763	1058	885	934	988	887
176	981	826	968	790	945	853	1051	738	1062	901	952	851	896
177	990	815	943	788	946	766	1056	727	1065	901	972	946	921
178	970	831	950	837	982	743	1062	808	1067	898	963	831	918
179	1015	858	977	860	1018	763	1083	792	1031	905	905	829	921
180	1035	865	957	847	972	783	1092	770	1040	905	851	824	961
Max Temp:	1035	865	1047	916	1029	1031	1092	840	1067	925	972	988	961
Max Allowed:	398	398	398	398	398	398	398	398	398	398	398	398	397

Time (min)	TC #28	TC #29	TC #30	TC #31	TC #32	TC #33	TC #34	TC #35	TC #36	TC #37	TC #38	TC #39	TC #40
0	72	72	70	68	68	70	70	72	72	73	73	73	73
1	72	72	70	68	68	70	72	72	72	73	73	73	73
2	72	72	70	68	68	70	72	72	72	73	73	73	73
3	72	72	70	68	68	70	70	72	72	73	73	73	73
4	72	72	70	68	68	70	72	72	72	72	73	73	73
5	72	72	70	68	68	70	72	72	72	73	73	73	73
6	72	70	70	68	68	70	70	72	72	72	73	73	73
7	72	72	70	68	68	70	70	72	72	72	73	73	73
8	72	72	70	68	68	70	72	72	72	73	73	73	73
9	72	72	70	68	68	70	72	72	72	73	73	73	73
10	72	72	70	68	68	70	72	72	72	73	73	73	73
11	72	72	70	68	68	70	70	72	72	72	73	73	73
12	72	72	70	68	68	70	72	72	72	72	73	73	73
13	72	72	70	68	68	70	70	72	72	73	73	73	73
14	72	72	70	68	68	70	70	72	72	73	73	73	73
15	72	72	70	68	68	70	72	72	72	73	73	73	73
16	72	72	70	68	68	70	70	72	73	73	72	73	73
17	72	72	70	68	68	70	72	72	72	72	73	73	73
18	72	72	70	68	68	70	72	72	72	73	72	73	73
19	72	72	70	68	68	70	70	72	72	72	73	73	73
20	72	72	70	70	68	70	72	72	72	72	73	73	73
21	73	72	70	68	68	70	72	72	72	72	73	73	75
22	72	72	70	68	68	70	72	72	72	72	73	73	73
23	72	72	70	68	68	70	72	72	72	73	73	73	73
24	73	72	70	68	68	70	72	72	72	73	73	73	73
25	72	72	70	68	68	70	70	72	72	72	72	73	73
26	72	72	70	68	68	70	70	72	72	73	73	73	73
27	73	73	70	68	68	70	72	72	72	73	73	73	73
28	73	73	70	68	68	70	72	72	72	73	73	73	73
29	73	72	70	68	68	70	70	72	73	73	73	73	73
30	73	72	72	68	68	70	70	72	72	73	73	73	75
31	73	73	72	68	68	70	72	72	73	73	73	73	75
32	73	73	72	68	68	70	72	72	72	73	73	75	75
33	73	73	72	68	68	70	72	72	73	73	73	73	75
34	73	73	72	68	68	70	72	72	73	73	73	75	75
35	73	73	72	68	68	70	72	72	73	73	73	75	75
36	75	75	72	68	68	70	72	72	73	73	75	75	75
37	75	73	72	68	68	70	72	72	73	73	75	75	77
38	75	75	73	68	68	70	72	73	73	75	75	75	75
39	75	77	73	68	68	70	72	73	73	75	75	75	77
40	77	77	73	68	68	70	72	73	73	75	75	77	75
41	77	77	73	68	68	70	72	73	73	75	75	77	79
42	77	79	73	68	70	70	73	73	75	75	75	77	77
43	79	79	73	68	68	70	72	73	75	75	77	77	79
44	79	79	75	68	68	72	73	73	75	75	77	77	79
45	79	79	75	70	68	72	73	75	75	77	77	79	79

Time (min)	TC #28	TC #29	TC #30	TC #31	TC #32	TC #33	TC #34	TC #35	TC #36	TC #37	TC #38	TC #39	TC #40
46	81	81	75	70	70	72	73	75	77	77	79	79	81
47	81	81	75	68	68	72	73	75	75	77	79	81	81
48	82	81	75	70	70	72	73	75	77	79	79	81	81
49	82	82	77	70	68	72	73	75	77	79	79	81	81
50	82	82	75	70	70	72	75	77	77	79	81	82	82
51	84	84	77	70	70	73	75	77	79	81	81	82	82
52	84	86	77	70	70	72	75	77	79	81	82	82	84
53	86	86	79	70	70	73	75	77	79	81	82	84	84
54	88	88	79	70	70	73	75	79	81	82	84	84	86
55	88	90	79	72	70	73	77	79	81	82	84	86	86
56	90	90	81	72	70	73	77	81	82	84	86	86	88
57	90	91	81	72	70	73	77	81	82	86	86	86	88
58	91	93	82	72	72	75	79	81	82	86	88	88	90
59	93	93	82	72	72	75	79	82	84	86	88	90	90
60	95	93	82	72	72	75	81	82	84	88	90	90	93
61	97	95	84	72	72	75	81	84	86	90	90	91	93
62	97	97	84	72	72	77	81	84	88	90	91	93	95
63	99	99	86	72	73	77	82	86	88	91	93	95	97
64	100	99	86	73	72	77	82	86	90	91	95	97	99
65	102	100	88	73	72	77	82	88	90	93	95	97	99
66	104	102	88	73	73	79	84	90	91	95	97	99	100
67	104	104	90	73	73	79	86	90	93	97	99	100	102
68	106	106	90	73	73	79	86	90	95	99	100	102	104
69	108	106	90	75	73	81	88	93	95	100	100	104	106
70	109	108	91	75	75	81	88	93	97	102	102	104	108
71	111	109	93	75	75	82	90	95	100	104	104	108	109
72	113	111	95	75	75	82	91	97	100	104	108	109	111
73	115	113	95	75	75	82	91	97	102	108	109	109	113
74	117	115	97	77	75	84	93	100	106	108	111	113	115
75	118	117	97	77	77	84	93	100	106	111	113	115	117
76	120	118	99	77	77	86	95	102	109	113	115	117	118
77	122	118	99	79	77	86	97	104	111	117	117	118	120
78	124	120	100	79	79	88	97	106	113	117	118	122	122
79	126	122	102	79	79	88	99	108	115	120	120	122	126
80	127	124	102	79	79	90	100	109	117	122	124	126	127
81	129	126	104	81	79	90	102	111	118	124	126	127	129
82	131	127	106	81	81	91	104	113	120	126	127	129	131
83	133	129	106	81	81	93	104	115	124	129	129	131	133
84	136	131	108	81	82	93	108	118	126	131	133	135	135
85	138	133	109	82	82	95	108	120	127	133	135	136	138
86	140	135	109	82	82	95	109	122	129	136	136	138	140
87	142	136	111	84	84	97	111	122	133	138	140	140	142
88	144	138	113	84	84	99	113	126	135	142	142	144	145
89	145	140	113	84	86	99	115	127	136	144	145	145	147
90	147	140	115	86	86	100	117	129	138	145	147	147	149
91	149	142	117	86	86	102	118	131	142	147	149	151	153

Time (min)	TC #28	TC #29	TC #30	TC #31	TC #32	TC #33	TC #34	TC #35	TC #36	TC #37	TC #38	TC #39	TC #40
92	151	144	117	86	88	102	118	133	144	151	153	153	154
93	154	145	118	86	88	104	120	135	145	153	154	156	158
94	156	147	120	88	90	106	122	138	149	156	156	158	160
95	158	149	120	88	90	106	124	140	151	158	160	160	162
96	160	151	122	90	91	108	126	140	153	160	162	163	165
97	162	153	124	90	91	109	127	144	156	163	165	165	167
98	163	154	126	91	91	109	129	145	158	165	167	169	169
99	165	158	126	91	93	111	131	147	160	167	169	171	172
100	169	158	127	91	93	113	133	149	162	171	172	172	174
101	171	162	129	93	95	115	135	151	163	172	174	176	178
102	172	162	129	93	95	115	136	153	165	174	176	178	180
103	174	163	131	93	97	117	138	154	167	176	180	180	183
104	176	165	133	93	97	118	140	156	169	180	181	183	185
105	180	169	133	95	99	118	142	158	172	181	185	185	189
106	181	169	136	97	100	120	144	162	174	183	187	189	190
107	183	171	136	97	100	122	145	162	176	185	189	190	194
108	185	174	138	99	100	124	147	165	178	187	192	192	196
109	187	176	140	99	102	126	149	167	180	190	194	194	199
110	423	178	142	100	102	126	151	169	181	190	196	198	201
111	477	180	144	100	104	127	153	171	183	194	198	199	205
112	360	181	144	100	104	129	154	172	185	196	199	201	207
113	486	183	145	102	106	131	156	174	187	198	201	205	208
114	198	185	147	102	106	133	158	176	189	199	205	207	212
115	430	187	147	104	108	133	158	178	190	201	205	210	214
116	513	189	149	106	108	135	160	180	192	203	208	212	217
117	509	190	151	106	109	136	163	181	194	205	210	214	219
118	529	192	153	106	111	138	165	183	196	207	212	216	223
119	475	194	154	108	111	140	167	185	198	208	214	217	226
120	406	196	154	108	113	142	169	187	199	210	216	221	228
121	410	671	156	109	113	142	171	189	201	212	219	223	230
122	417	685	639	109	115	144	172	190	203	214	221	225	234
123	423	700	651	111	117	145	174	192	205	216	223	228	237
124	448	606	660	111	117	149	176	194	207	217	225	230	239
125	365	630	673	113	118	149	178	196	208	219	228	234	243
126	421	424	684	113	118	151	180	198	208	223	230	235	246
127	446	212	691	115	120	153	181	199	212	225	234	237	248
128	446	615	698	115	122	154	183	201	214	226	235	241	252
129	442	718	709	117	122	156	185	203	216	230	239	243	255
130	466	707	721	117	124	158	185	205	219	232	241	246	257
131	493	691	711	118	126	158	187	207	219	234	244	248	261
132	529	705	711	118	126	160	189	208	223	237	246	252	264
133	473	608	667	120	127	162	190	210	225	239	250	255	268
134	432	365	201	120	127	162	190	212	226	243	252	257	270
135	457	739	601	122	129	163	192	214	230	244	255	261	273
136	424	333	477	122	129	165	194	216	232	248	259	264	277
137	504	228	516	124	131	165	196	219	234	250	261	266	280

Time (min)	TC #28	TC #29	TC #30	TC #31	TC #32	TC #33	TC #34	TC #35	TC #36	TC #37	TC #38	TC #39	TC #40
138	255	230	572	124	131	167	198	221	237	253	264	270	284
139	621	234	568	126	133	169	199	223	239	255	268	273	288
140	651	234	338	126	135	169	201	225	241	259	270	275	291
141	493	237	615	127	135	171	203	226	244	261	273	279	295
142	617	239	673	129	135	171	205	228	246	264	277	282	298
143	286	241	685	129	136	172	205	232	250	266	280	286	302
144	849	743	734	129	136	174	207	234	252	270	282	289	306
145	876	795	862	275	138	174	208	235	255	271	286	291	309
146	792	774	867	131	138	176	210	237	257	275	289	295	313
147	538	768	774	338	140	178	212	239	261	279	293	298	316
148	502	792	856	135	140	178	214	241	262	280	297	302	322
149	644	786	912	345	142	180	216	244	266	284	300	306	325
150	721	797	838	342	144	181	217	246	268	288	304	309	329
151	703	817	819	147	144	181	219	248	271	291	307	313	333
152	680	822	813	138	144	183	221	252	275	298	311	318	338
153	561	815	743	140	145	185	223	253	279	302	316	322	342
154	624	810	723	142	147	187	225	255	280	306	320	325	347
155	622	819	797	358	147	187	226	257	284	309	324	329	351
156	666	804	799	381	147	189	228	261	288	313	327	333	354
157	678	864	846	612	149	190	230	262	289	316	331	338	360
158	768	896	873	678	151	192	234	266	293	318	334	342	363
159	774	880	858	673	151	192	234	268	297	322	340	345	367
160	799	851	736	685	151	194	235	271	298	325	343	349	372
161	790	797	738	684	153	196	239	273	302	329	347	352	378
162	819	876	730	651	154	198	241	275	306	331	351	358	381
163	822	876	734	572	154	198	243	279	307	334	354	361	387
164	914	774	766	741	154	199	244	280	311	338	358	367	392
165	921	804	788	801	156	201	246	284	315	342	361	370	396
166	936	887	802	790	158	203	250	288	318	345	365	374	401
167	973	813	828	763	158	205	252	289	322	349	370	379	406
168	957	792	826	779	160	205	253	291	324	352	374	383	412
169	977	792	822	757	160	207	255	295	327	358	378	388	417
170	993	835	838	750	162	208	259	298	331	361	381	392	423
171	1009	799	847	864	163	210	261	300	334	365	387	397	428
172	1018	768	819	768	163	212	262	304	338	369	390	403	433
173	853	810	828	801	165	214	266	306	342	372	396	406	439
174	982	793	912	862	167	216	268	309	345	378	399	412	444
175	1013	788	954	874	167	217	270	313	349	381	405	417	450
176	1029	792	959	894	169	219	273	316	352	385	408	421	455
177	975	799	977	901	171	223	277	318	356	388	414	426	462
178	999	813	1004	918	172	225	279	322	360	392	417	432	468
179	957	828	1054	916	172	226	280	324	363	397	423	437	473
180	928	842	1049	934	174	228	284	327	367	401	426	442	478
Max Temp:	1029	896	1054	934	174	228	284	327	367	401	426	442	478
Max Allowed:	397	397	395	393	393	395	395	397	397	398	398	398	398

Time (min)	TC #41	TC #42	TC #43	TC #44	TC #45	TC #46	TC #47	TC #48	TC #49	TC #50	TC #51	TC #52	TC #53	TC #54
0	73	73	73	73	73	73	73	73	73	73	72	72	72	70
1	73	73	73	73	73	73	73	73	73	72	72	72	72	70
2	73	73	73	73	73	73	73	73	73	72	72	72	72	70
3	73	73	73	73	73	73	73	73	73	73	72	72	72	70
4	73	73	73	73	73	73	73	73	73	72	72	72	72	70
5	73	73	73	73	73	73	73	73	73	73	72	72	72	70
6	73	73	73	73	73	73	73	72	72	73	72	72	72	72
7	73	72	73	73	73	73	73	72	73	73	72	72	72	70
8	73	73	73	73	73	73	73	73	73	72	72	72	72	70
9	73	73	73	73	73	73	73	73	73	73	72	72	72	70
10	73	73	73	73	73	73	73	73	73	72	72	72	72	72
11	73	73	73	73	73	73	73	72	73	73	72	72	72	72
12	73	72	73	73	73	73	73	73	72	72	72	72	72	70
13	73	73	73	73	73	73	73	72	73	73	72	72	72	70
14	73	73	73	73	73	73	73	73	73	73	72	72	72	70
15	73	73	73	73	73	73	73	72	73	72	72	72	72	72
16	72	73	73	73	72	73	73	72	73	72	72	72	70	72
17	73	73	73	73	73	73	73	72	73	73	72	72	70	70
18	72	73	73	73	73	73	73	72	73	72	72	72	72	70
19	73	73	73	73	73	72	73	73	73	73	72	72	72	70
20	73	72	73	73	73	73	73	73	73	72	72	72	72	72
21	73	73	73	73	73	73	73	72	73	73	72	72	72	70
22	73	73	73	73	73	73	73	73	73	73	72	72	72	72
23	73	73	73	73	73	73	73	72	73	73	73	72	72	70
24	73	73	73	73	73	73	73	72	73	73	72	72	72	70
25	73	73	73	75	73	73	73	73	73	73	72	72	72	70
26	73	73	73	75	73	73	73	73	73	73	72	72	72	70
27	73	73	75	73	75	73	73	73	73	73	72	72	72	70
28	73	73	75	75	73	73	73	73	73	73	72	72	72	72
29	73	73	75	75	75	73	73	73	73	73	72	72	72	72
30	73	75	75	75	75	73	73	73	73	73	72	72	72	72
31	73	75	75	75	75	73	73	73	73	73	73	72	72	72
32	75	75	75	77	75	75	73	75	75	73	73	73	72	72
33	75	75	77	77	75	73	75	75	73	73	73	73	72	72
34	75	75	77	77	75	75	73	73	73	75	73	73	72	72
35	75	75	77	77	75	75	75	73	73	75	73	73	72	72
36	75	77	77	77	77	75	75	75	75	75	73	73	73	72
37	75	77	79	79	77	75	75	75	75	75	73	73	73	72
38	77	77	79	79	77	77	75	75	75	75	73	73	73	72
39	77	77	79	81	79	77	75	75	75	75	75	73	73	73
40	77	77	81	81	79	77	77	75	75	75	75	75	73	73
41	77	79	81	81	79	77	77	77	77	75	75	75	73	73
42	77	79	82	82	81	79	77	77	77	77	75	75	75	73
43	79	79	82	82	81	79	77	77	77	77	75	75	75	73
44	79	81	84	84	81	79	79	77	77	77	77	75	75	75
45	79	81	84	84	82	79	79	79	79	79	77	77	77	75

Time (min)	TC #41	TC #42	TC #43	TC #44	TC #45	TC #46	TC #47	TC #48	TC #49	TC #50	TC #51	TC #52	TC #53	TC #54
46	81	82	86	86	82	81	79	79	81	79	77	77	77	75
47	81	82	86	86	84	81	81	79	79	79	79	77	77	77
48	82	82	88	88	84	82	81	81	81	81	79	79	79	77
49	82	84	88	90	86	82	82	81	81	81	79	79	79	77
50	84	86	90	90	86	84	82	82	82	82	81	81	79	77
51	84	86	91	91	88	84	82	82	82	82	81	81	81	79
52	84	86	93	93	88	86	84	84	84	84	82	82	81	79
53	86	88	93	95	90	86	84	84	84	84	82	82	81	81
54	86	90	95	95	91	88	86	86	86	86	84	82	82	81
55	88	91	97	97	93	90	88	86	86	86	84	82	82	82
56	90	91	99	99	95	90	90	88	88	88	86	84	84	82
57	90	93	100	100	95	91	90	90	90	90	86	86	84	84
58	91	95	100	102	97	93	91	90	91	90	88	86	86	84
59	93	97	102	104	99	95	91	91	91	91	90	88	86	84
60	93	97	104	106	100	97	93	93	93	93	90	90	88	86
61	95	99	106	108	102	97	95	93	95	93	91	90	90	86
62	97	100	108	109	104	99	97	95	95	95	93	91	90	88
63	99	102	109	111	106	100	99	97	97	97	95	93	91	88
64	100	104	113	113	108	102	100	99	99	97	97	93	93	90
65	102	106	115	115	109	104	100	100	100	100	97	95	93	91
66	102	108	117	118	111	106	104	102	102	102	99	97	97	91
67	104	111	118	120	113	108	104	104	104	102	100	97	97	93
68	108	111	120	122	117	109	108	106	104	104	100	100	99	95
69	109	113	122	124	118	111	108	108	108	106	102	100	100	95
70	109	115	126	126	120	113	111	109	108	108	104	102	100	97
71	111	117	127	129	122	115	111	111	109	109	106	104	102	99
72	115	118	129	131	124	118	115	111	113	111	108	104	104	99
73	117	122	131	133	126	120	117	115	115	113	111	108	106	100
74	118	124	135	136	129	122	118	115	117	115	111	108	108	102
75	120	126	136	138	131	124	120	118	118	117	113	109	108	104
76	122	127	138	140	133	126	122	120	120	118	115	111	109	104
77	124	131	142	144	135	129	126	122	122	120	117	113	111	106
78	126	133	144	145	138	131	127	124	124	122	118	115	113	108
79	129	135	147	149	140	133	129	126	126	126	120	117	115	108
80	131	136	149	151	144	136	131	129	127	127	122	118	117	111
81	133	140	153	154	145	138	133	129	129	127	124	120	117	111
82	135	142	154	158	147	140	135	133	131	131	126	122	120	113
83	138	144	158	160	151	142	136	135	135	133	127	124	122	115
84	140	147	160	162	153	145	140	136	136	135	129	126	122	117
85	142	149	163	165	154	147	142	140	138	136	133	127	126	117
86	144	153	165	169	158	151	144	140	140	138	133	129	127	120
87	147	156	169	171	162	153	147	144	142	140	136	131	129	122
88	149	158	172	174	163	154	149	147	145	144	138	133	129	122
89	153	160	174	178	165	158	151	149	147	145	140	135	133	124
90	154	163	178	181	169	162	154	151	149	147	142	136	133	126
91	156	165	181	183	172	163	156	153	151	151	144	140	135	127

Time (min)	TC #41	TC #42	TC #43	TC #44	TC #45	TC #46	TC #47	TC #48	TC #49	TC #50	TC #51	TC #52	TC #53	TC #54
92	160	169	185	187	174	165	160	156	154	153	147	140	136	129
93	162	172	189	190	178	169	162	158	156	154	149	144	138	131
94	165	174	192	194	180	171	165	160	158	156	151	145	140	133
95	167	178	196	198	183	174	167	162	162	158	153	147	142	133
96	171	180	201	203	187	176	169	165	163	162	154	149	144	136
97	172	185	205	207	190	180	172	167	165	163	158	151	147	136
98	176	187	208	212	194	183	174	171	169	165	160	153	149	140
99	178	190	214	216	198	185	178	172	171	169	162	154	151	140
100	181	194	217	221	201	189	180	176	172	171	163	158	153	142
101	183	198	223	226	205	192	183	178	176	174	167	160	154	144
102	187	201	228	230	208	194	185	180	178	176	169	162	156	145
103	189	205	232	235	212	198	189	183	181	178	171	163	158	147
104	192	208	237	241	216	201	192	185	183	181	172	165	160	149
105	196	214	244	248	221	205	196	189	187	183	174	167	163	151
106	198	217	250	253	226	208	198	192	189	187	178	171	165	153
107	201	221	255	259	230	212	201	194	190	189	180	172	167	154
108	205	225	259	264	234	216	205	198	194	192	181	174	167	156
109	208	228	266	270	239	221	208	201	196	194	185	176	169	158
110	210	234	271	277	244	225	212	203	199	198	187	178	172	160
111	214	237	277	282	248	230	216	207	203	199	190	181	174	162
112	216	241	284	288	253	234	219	210	207	203	192	183	176	163
113	219	246	289	295	259	237	223	214	208	205	194	185	178	165
114	223	252	295	300	262	241	226	216	212	208	198	187	180	167
115	226	255	300	307	268	246	230	219	214	210	199	190	183	169
116	230	259	307	315	273	250	234	223	217	214	201	192	185	171
117	232	264	313	320	279	255	237	226	221	217	205	194	187	172
118	235	268	320	327	284	261	241	230	223	219	207	198	189	174
119	239	273	325	334	291	266	246	234	226	223	210	199	192	176
120	243	279	333	342	295	270	250	237	230	226	212	201	192	178
121	246	282	338	349	302	275	255	241	234	228	216	205	196	180
122	250	288	347	354	307	280	259	244	237	232	217	207	198	181
123	253	291	352	361	315	286	264	248	241	235	221	210	199	183
124	257	297	360	369	320	291	268	252	244	239	223	212	201	185
125	259	302	365	376	325	297	273	255	246	243	226	214	205	187
126	262	307	372	383	333	304	277	261	250	246	228	217	207	189
127	266	313	379	392	340	309	282	264	253	248	230	219	208	190
128	270	316	387	399	345	315	288	268	257	252	234	223	210	192
129	273	322	394	406	352	322	291	271	261	255	237	225	214	194
130	277	327	401	415	360	327	297	277	264	259	241	226	216	198
131	280	333	408	423	367	333	302	280	268	262	243	230	217	198
132	284	338	417	430	374	340	307	284	271	266	246	234	219	201
133	288	343	424	439	381	345	313	288	275	270	250	235	223	203
134	293	349	432	448	388	352	318	293	280	273	253	239	225	205
135	297	354	439	455	396	360	324	297	284	277	255	241	228	207
136	300	360	446	464	403	367	329	302	288	280	259	244	230	208
137	304	365	455	471	410	374	336	306	291	284	261	246	232	210

Time (min)	TC #41	TC #42	TC #43	TC #44	TC #45	TC #46	TC #47	TC #48	TC #49	TC #50	TC #51	TC #52	TC #53	TC #54
138	309	370	462	480	419	381	342	311	297	288	264	250	235	214
139	313	378	469	489	426	387	347	316	298	293	268	252	237	216
140	316	383	477	496	433	394	354	320	304	297	271	255	239	217
141	320	388	484	505	442	401	360	325	307	300	273	257	241	219
142	325	394	493	514	450	408	365	331	313	304	277	261	244	219
143	329	399	500	523	459	415	372	334	316	309	280	264	246	223
144	333	406	507	532	466	423	378	340	320	313	284	266	248	225
145	338	412	514	540	475	430	385	345	325	316	288	270	252	226
146	342	417	522	549	484	437	390	351	331	320	264	271	253	228
147	347	423	531	558	491	444	397	356	334	325	266	275	255	230
148	351	430	538	567	500	451	403	361	340	329	441	277	309	239
149	356	435	547	577	509	460	410	367	343	333	442	280	270	241
150	361	442	556	586	518	468	417	372	343	338	284	284	259	239
151	365	448	565	597	527	475	423	378	354	342	433	286	266	237
152	370	455	574	608	536	484	439	383	352	347	291	367	268	239
153	376	460	581	617	534	493	437	388	356	478	284	381	266	241
154	381	468	590	628	532	504	460	421	367	597	280	397	246	250
155	385	475	601	630	552	514	462	432	349	633	306	450	270	255
156	390	482	610	648	572	516	489	406	379	576	327	469	271	257
157	396	489	621	660	581	583	504	414	601	648	331	487	275	261
158	401	495	630	671	579	565	482	451	615	676	334	527	279	259
159	406	504	639	669	583	550	554	473	621	680	351	597	282	261
160	414	509	649	691	626	556	523	547	628	687	360	642	289	257
161	419	518	658	703	640	588	608	556	635	680	349	712	293	261
162	424	525	669	712	658	586	631	576	646	669	354	720	288	273
163	430	532	682	721	642	642	576	541	801	644	361	714	378	354
164	435	540	693	739	658	608	685	547	653	558	556	628	396	363
165	442	549	703	754	684	606	610	466	788	752	639	581	493	804
166	448	556	714	779	734	630	657	583	808	747	450	576	500	790
167	453	565	725	783	705	621	649	478	838	757	433	621	358	680
168	460	572	738	792	748	684	646	486	693	705	450	502	345	558
169	468	581	750	801	772	637	651	604	822	725	655	601	437	702
170	473	590	763	815	786	657	676	523	844	702	579	424	529	849
171	480	599	774	829	810	669	635	639	882	684	630	361	327	860
172	486	608	788	840	799	675	730	520	876	721	486	666	421	878
173	493	617	802	860	811	676	660	525	883	687	504	604	685	892
174	500	628	815	873	815	687	675	570	889	705	520	700	612	900
175	507	637	829	891	822	698	662	543	891	700	628	702	549	630
176	514	648	846	898	797	709	709	547	883	729	568	752	518	696
177	522	657	862	896	772	720	729	507	867	759	531	810	676	813
178	529	667	880	914	790	730	741	547	865	766	565	640	738	768
179	536	676	896	950	763	736	761	612	840	783	635	671	752	777
180	543	687	912	961	808	752	761	761	867	783	712	747	635	730
Max Temp:	543	687	912	961	822	752	761	761	891	783	712	810	752	900
Max Allowed:	398	398	398	398	398	398	398	398	398	398	397	397	397	395

Time (min)	TC #55	TC #56	TC #57	TC #58	TC #59	TC #60	TC #61	TC #62	TC #63	TC #64	TC #65	TC #66	TC #67	TC #68
0	70	68	68	68	70	70	70	72	72	72	72	72	72	72
1	70	68	68	68	70	70	70	70	72	72	72	72	72	72
2	70	68	68	68	70	70	70	72	72	72	72	72	72	72
3	70	68	68	68	70	70	70	70	72	72	72	72	72	72
4	70	68	68	68	70	70	70	72	72	72	72	72	72	72
5	70	68	68	68	70	70	70	70	72	72	72	72	72	72
6	70	68	68	68	68	70	70	72	72	72	70	72	72	72
7	70	68	68	68	70	70	70	72	72	72	72	72	72	72
8	70	68	68	68	70	70	70	70	72	72	72	72	72	72
9	70	70	68	68	70	70	70	72	72	72	72	72	72	72
10	70	68	68	68	70	70	70	72	72	72	72	72	72	72
11	70	68	68	68	68	70	70	72	72	72	72	72	72	72
12	70	68	68	68	70	70	72	72	72	72	72	72	72	72
13	70	68	68	68	70	70	70	72	72	72	72	72	72	72
14	70	68	68	68	70	70	70	72	72	70	72	72	72	72
15	70	68	68	68	70	70	70	72	72	72	72	72	72	72
16	70	70	68	68	70	70	72	72	72	72	72	72	72	72
17	70	68	68	68	68	70	70	70	72	72	72	72	72	72
18	70	68	68	68	70	70	70	72	72	72	72	72	72	72
19	70	68	68	68	70	70	70	70	72	70	72	72	72	72
20	70	68	68	68	70	70	72	70	72	72	72	72	72	72
21	70	68	66	68	70	70	70	70	72	72	72	72	72	72
22	70	68	68	68	68	70	70	72	72	72	72	72	72	72
23	70	68	68	68	70	70	70	72	72	72	72	72	72	72
24	70	68	68	68	70	70	72	72	72	72	72	72	73	72
25	70	68	68	68	70	70	72	72	72	72	72	72	72	72
26	70	68	68	68	68	70	72	72	72	72	73	73	73	72
27	70	68	68	68	70	70	72	72	72	73	73	73	73	72
28	70	68	68	68	70	70	72	72	73	72	73	73	73	73
29	70	68	68	68	70	70	72	72	73	72	73	73	72	73
30	70	70	68	68	70	72	72	72	73	72	73	73	73	73
31	70	68	68	68	70	72	72	73	73	73	73	73	73	72
32	70	70	68	68	70	72	72	73	73	75	73	73	73	73
33	70	68	68	68	70	72	72	73	73	73	73	75	73	73
34	70	68	68	68	70	72	73	73	75	73	73	75	73	73
35	70	68	68	68	70	72	73	73	75	73	75	75	73	75
36	72	70	68	68	70	72	73	73	75	75	75	75	73	75
37	72	70	68	68	70	73	73	75	75	73	75	75	75	75
38	72	70	68	68	70	73	73	75	77	75	75	77	75	75
39	72	68	68	68	72	73	75	75	75	75	75	77	75	75
40	72	70	68	68	72	73	75	75	77	75	77	77	75	77
41	72	68	68	68	72	73	75	77	77	77	77	79	75	77
42	72	70	68	68	72	73	75	77	77	77	79	79	75	77
43	72	70	68	68	72	75	75	77	79	77	79	79	77	77
44	72	70	68	68	72	75	77	77	79	77	79	79	77	79
45	73	70	68	68	72	75	77	77	79	77	79	81	77	79

Time (min)	TC #55	TC #56	TC #57	TC #58	TC #59	TC #60	TC #61	TC #62	TC #63	TC #64	TC #65	TC #66	TC #67	TC #68
46	73	72	68	68	73	75	77	79	81	79	79	81	79	81
47	73	70	68	68	72	77	79	81	81	79	81	81	79	81
48	73	70	68	68	73	77	79	81	82	81	81	82	79	81
49	73	70	68	68	73	77	81	81	82	81	82	82	81	82
50	75	72	70	68	73	79	81	82	84	81	82	84	81	82
51	75	72	70	68	75	79	81	82	84	82	82	84	81	82
52	75	72	70	68	75	79	82	84	84	82	84	86	82	84
53	75	72	70	68	75	81	82	84	86	82	84	86	82	84
54	77	72	70	70	75	81	82	86	86	84	86	86	82	86
55	77	73	72	68	75	82	84	86	88	84	86	88	84	86
56	77	73	70	68	77	82	86	86	88	86	88	90	86	88
57	79	73	72	70	77	82	86	88	90	86	90	88	86	90
58	79	73	72	70	77	84	86	90	91	88	90	90	86	90
59	79	73	72	70	77	84	88	90	91	88	91	91	88	91
60	81	75	72	70	77	86	88	91	93	90	91	93	88	91
61	81	75	72	70	79	86	90	93	93	90	93	93	90	93
62	82	75	72	70	79	88	90	93	95	91	93	95	90	93
63	82	75	73	70	79	88	91	95	95	93	93	95	91	95
64	84	77	72	70	79	90	93	95	97	93	95	97	91	97
65	84	77	73	70	81	90	93	97	99	95	97	97	93	99
66	86	77	73	72	81	91	95	99	99	97	97	99	93	99
67	86	79	73	70	81	91	95	99	100	97	99	100	95	100
68	86	79	75	72	82	93	97	100	102	99	100	102	97	102
69	86	79	73	72	82	93	99	102	104	100	102	102	97	102
70	88	81	73	72	82	95	100	104	104	100	102	104	99	104
71	90	81	75	72	84	95	100	104	106	102	104	106	99	106
72	90	81	75	72	84	97	102	106	108	104	106	106	100	108
73	91	82	75	72	86	99	102	108	109	104	106	108	102	108
74	93	82	77	72	86	100	104	109	111	106	108	109	102	109
75	93	82	77	73	88	100	106	111	111	108	109	109	104	111
76	95	84	77	73	88	100	108	111	113	109	111	111	106	113
77	97	86	77	73	88	102	109	113	115	109	111	111	108	113
78	97	86	77	73	90	104	109	115	117	111	113	113	108	115
79	97	86	79	73	90	104	111	117	118	113	115	115	109	117
80	99	88	79	73	90	106	113	118	120	115	115	117	111	118
81	100	88	79	73	93	106	115	118	122	115	117	118	111	120
82	100	88	81	75	91	108	115	122	122	117	118	118	113	122
83	102	90	81	75	91	109	117	122	124	118	118	120	115	122
84	104	90	81	75	93	109	117	124	126	120	120	122	115	124
85	104	90	82	75	95	111	118	126	127	122	122	122	117	126
86	106	91	82	75	95	111	120	127	129	122	124	124	118	127
87	108	93	82	77	97	113	122	127	131	124	124	126	120	129
88	108	93	84	77	97	115	122	129	133	126	126	127	122	131
89	109	93	84	77	99	115	124	131	135	127	127	129	122	133
90	111	95	84	77	99	117	126	135	136	129	129	129	124	135
91	111	97	86	77	100	118	126	135	136	131	129	131	126	135

Time (min)	TC #55	TC #56	TC #57	TC #58	TC #59	TC #60	TC #61	TC #62	TC #63	TC #64	TC #65	TC #66	TC #67	TC #68
92	113	97	86	77	100	118	127	136	138	133	133	133	127	138
93	115	99	86	79	100	120	129	138	140	133	133	133	127	140
94	117	99	86	79	102	122	131	138	142	135	135	136	129	140
95	118	100	88	79	102	122	133	140	144	136	136	136	131	142
96	118	100	88	79	102	124	135	142	145	138	136	138	133	144
97	120	102	90	81	104	126	135	144	147	138	138	140	135	147
98	120	102	90	81	106	126	136	144	147	140	140	140	135	147
99	122	104	90	81	106	127	138	147	149	142	142	142	136	151
100	124	104	91	81	108	129	138	149	151	144	144	144	138	153
101	126	106	91	82	108	129	140	149	153	145	145	145	140	153
102	126	106	91	82	108	131	142	151	154	147	147	147	142	156
103	127	108	93	82	109	131	144	153	156	147	147	149	144	158
104	129	108	93	82	111	133	144	154	158	151	149	149	145	160
105	131	109	93	82	111	135	145	156	160	153	151	151	147	162
106	131	111	95	84	111	136	147	158	162	153	153	153	147	165
107	133	111	95	84	113	136	149	160	163	154	154	154	149	167
108	135	113	97	84	113	138	151	162	165	156	154	156	151	169
109	135	113	97	84	115	138	151	163	167	158	156	158	153	171
110	136	115	97	86	115	140	153	165	167	160	158	158	154	172
111	138	115	99	86	117	142	154	167	169	162	160	160	158	176
112	140	117	99	86	117	144	156	169	171	163	162	162	158	178
113	142	118	100	86	118	144	158	169	172	165	163	163	160	180
114	144	118	100	86	118	145	158	171	174	167	165	165	162	183
115	144	120	102	88	118	145	160	172	176	167	167	167	163	185
116	145	120	102	88	120	147	163	174	178	169	167	169	165	187
117	147	122	102	90	122	149	163	176	180	171	169	171	167	190
118	149	122	104	90	122	151	165	178	181	172	171	172	169	192
119	149	124	104	90	124	151	165	180	183	174	172	174	171	196
120	151	126	104	90	124	153	167	181	185	176	174	176	172	198
121	153	126	106	90	126	154	169	183	185	178	176	178	174	201
122	154	127	108	91	126	154	171	183	187	180	178	180	176	203
123	156	127	108	91	127	156	172	185	189	181	180	181	178	205
124	158	129	108	93	127	158	172	187	190	181	181	183	180	208
125	158	129	109	93	129	160	174	189	192	183	183	185	183	212
126	160	131	109	93	129	162	176	190	194	185	183	187	185	214
127	162	133	111	93	131	162	178	192	196	187	185	189	187	217
128	163	135	111	93	133	165	180	194	198	189	187	190	189	219
129	165	135	113	95	133	165	180	196	199	190	189	192	190	223
130	167	136	113	95	135	167	181	198	199	190	190	194	192	226
131	169	136	113	95	136	169	183	198	201	194	192	196	196	228
132	169	138	115	97	138	172	185	199	203	194	194	198	198	230
133	172	140	115	97	140	174	185	201	205	198	198	199	199	234
134	172	140	117	97	142	176	187	203	207	198	198	201	201	237
135	174	142	117	99	144	178	189	205	208	199	199	205	205	239
136	176	144	118	99	145	180	189	205	210	201	201	205	207	243
137	178	144	118	100	147	183	190	208	212	203	203	208	208	246

Time (min)	TC #55	TC #56	TC #57	TC #58	TC #59	TC #60	TC #61	TC #62	TC #63	TC #64	TC #65	TC #66	TC #67	TC #68
138	180	145	120	100	149	185	192	208	212	205	205	210	212	248
139	180	145	120	100	151	187	194	210	214	207	207	212	214	252
140	181	147	122	100	153	190	196	212	216	208	208	214	216	255
141	183	149	122	102	154	194	198	214	217	210	212	216	217	257
142	185	151	124	102	156	198	199	216	219	212	212	217	221	261
143	185	151	124	104	158	201	201	217	221	212	214	221	223	264
144	187	151	124	104	160	203	203	217	223	214	216	223	225	266
145	189	153	124	104	162	205	205	219	225	216	219	225	228	270
146	190	194	124	106	162	207	207	221	225	217	219	226	230	273
147	190	198	126	106	163	208	208	223	226	219	223	230	234	277
148	223	523	124	106	163	210	208	225	228	221	225	232	235	280
149	194	554	126	108	165	210	210	226	230	223	226	234	237	284
150	194	201	126	108	165	212	212	226	232	225	228	237	241	286
151	198	496	126	109	167	212	214	228	234	226	230	239	243	289
152	199	203	127	109	167	214	216	230	235	228	232	243	246	293
153	199	198	167	109	169	216	217	232	237	230	234	244	250	297
154	203	217	167	111	169	216	219	234	239	232	237	248	252	300
155	205	370	176	111	171	217	221	235	241	234	237	250	255	304
156	680	464	275	111	171	219	223	237	243	235	241	253	259	307
157	723	171	142	113	172	221	223	239	244	237	243	255	262	313
158	509	549	361	113	172	223	225	241	246	239	246	259	264	316
159	748	565	419	115	174	225	228	243	248	241	248	262	268	320
160	721	649	549	115	174	226	230	243	250	243	250	266	271	324
161	527	702	415	115	176	228	230	244	252	244	252	268	275	327
162	700	714	424	115	176	228	234	248	253	246	255	271	279	333
163	772	779	410	117	178	230	234	250	255	248	257	273	280	336
164	784	748	651	117	178	232	237	252	257	250	259	277	284	340
165	730	824	538	118	178	234	239	253	259	252	262	280	288	345
166	655	835	631	118	180	234	241	255	261	255	266	282	291	349
167	612	846	687	118	180	235	243	257	264	257	268	286	295	354
168	639	829	700	120	180	237	244	259	266	259	270	289	298	358
169	689	838	729	120	181	239	248	261	268	261	271	291	302	361
170	723	847	712	120	181	241	250	264	270	264	275	295	306	367
171	772	856	727	122	183	241	252	266	271	266	277	298	309	370
172	792	867	702	122	183	243	255	268	275	268	280	302	313	376
173	819	880	763	122	183	244	257	270	277	271	282	306	316	381
174	835	889	491	124	185	246	259	273	279	273	286	307	320	385
175	846	901	522	124	187	248	262	275	282	277	288	311	324	390
176	862	912	180	124	187	250	264	279	284	279	291	315	329	394
177	876	943	662	126	187	253	268	280	286	282	293	318	333	399
178	891	939	428	126	189	255	270	284	289	284	297	322	336	405
179	901	889	626	126	190	257	273	286	291	288	298	325	340	408
180	912	903	759	127	190	259	277	288	295	291	302	329	345	414
Max Temp:	912	943	763	127	190	259	277	288	295	291	302	329	345	414
Max Allowed:	395	393	393	393	395	395	395	397	397	397	397	397	397	397

Time (min)	TC #69	TC #70	TC #71	TC #72	TC #73	TC #74	TC #75	TC #76	TC #77	TC #78	TC #79	TC #80	TC #81
0	72	72	72	72	72	72	72	72	72	72	72	72	72
1	72	72	72	72	72	72	72	72	72	72	72	72	72
2	72	72	72	72	72	72	72	72	72	72	72	72	72
3	72	72	72	72	72	72	72	72	72	72	72	72	72
4	72	72	72	72	72	72	72	72	72	72	72	72	72
5	72	72	72	72	72	72	72	72	72	72	72	72	72
6	72	72	70	72	72	72	72	72	72	72	72	72	72
7	72	72	72	72	72	72	72	72	72	72	72	72	72
8	73	72	72	72	72	72	72	72	72	72	72	72	72
9	72	72	72	72	72	72	72	72	72	72	72	72	72
10	72	72	72	72	72	72	72	72	72	72	72	72	72
11	72	72	72	72	72	72	72	72	72	72	72	72	72
12	72	72	72	72	72	72	72	72	72	72	72	72	72
13	72	72	72	72	72	72	72	72	72	72	72	72	72
14	72	72	72	72	72	72	72	73	72	72	72	72	72
15	72	72	72	72	72	72	72	73	73	72	72	72	72
16	72	73	72	72	72	72	72	73	73	72	72	72	72
17	72	73	72	72	72	72	72	73	73	72	72	72	72
18	72	72	72	72	72	72	72	73	73	72	72	72	72
19	72	72	72	72	72	72	72	73	73	72	72	72	72
20	72	72	72	72	72	72	72	75	75	73	72	72	72
21	72	73	72	73	72	72	72	77	75	72	73	72	72
22	73	73	72	72	72	72	72	77	75	73	73	72	73
23	72	73	73	72	72	72	72	79	77	72	73	73	73
24	73	73	72	72	72	72	73	81	79	72	73	72	72
25	73	73	72	72	72	72	73	81	79	73	72	72	73
26	75	73	73	72	72	72	73	82	81	73	73	72	73
27	73	75	73	72	72	72	73	84	81	75	73	73	73
28	73	75	73	72	72	72	73	86	82	73	73	73	73
29	73	75	73	72	72	72	73	86	82	73	73	72	73
30	73	75	73	73	72	73	75	88	86	75	73	72	73
31	75	77	73	73	72	72	75	90	86	75	73	72	73
32	77	77	75	73	72	73	75	93	88	75	75	73	75
33	75	77	75	73	73	73	75	93	91	77	75	73	75
34	75	77	75	73	73	73	77	97	91	77	75	73	75
35	77	79	75	73	73	73	77	99	93	77	75	75	77
36	77	79	75	75	73	73	77	100	97	77	77	73	77
37	77	81	77	75	73	73	79	102	99	79	77	73	77
38	77	81	77	75	73	73	79	106	100	79	77	75	77
39	79	81	77	75	73	75	81	108	104	81	77	75	77
40	79	82	79	75	75	75	81	111	106	81	79	75	79
41	81	84	79	77	75	75	81	113	108	82	79	77	79
42	81	82	79	77	75	75	82	117	111	82	79	77	79
43	81	84	81	77	75	75	82	118	113	82	79	77	81
44	82	84	81	79	77	77	84	122	117	84	81	77	81
45	82	86	82	79	77	77	84	126	118	86	81	79	82

Time (min)	TC #69	TC #70	TC #71	TC #72	TC #73	TC #74	TC #75	TC #76	TC #77	TC #78	TC #79	TC #80	TC #81
46	84	88	82	79	77	77	86	127	122	86	82	79	82
47	84	90	84	81	77	77	86	131	126	86	82	81	84
48	86	90	84	81	79	79	88	135	127	88	84	81	84
49	86	91	86	81	79	79	88	136	131	90	84	81	86
50	88	93	86	82	79	79	90	140	133	90	86	82	86
51	88	93	88	82	81	81	90	144	136	91	86	84	88
52	90	95	88	82	81	81	91	147	140	93	88	84	90
53	90	97	90	84	82	82	93	149	144	93	88	84	90
54	91	97	90	86	82	82	95	153	145	95	90	86	91
55	93	99	91	86	82	82	95	156	149	97	90	86	93
56	93	100	93	88	84	84	97	158	153	97	91	88	93
57	95	102	95	88	84	84	97	162	154	99	93	88	95
58	97	104	95	90	86	86	99	165	156	100	95	90	95
59	99	104	97	90	86	86	100	167	160	102	95	90	97
60	100	106	99	91	86	88	102	171	162	104	97	91	99
61	100	108	100	93	88	88	104	172	165	106	97	93	100
62	102	109	100	93	90	90	106	176	167	106	99	93	100
63	104	111	102	95	90	90	108	176	171	108	100	95	104
64	104	113	104	95	91	91	109	180	172	109	100	95	104
65	106	115	106	97	91	93	109	181	174	111	102	97	106
66	108	117	106	99	93	93	111	185	178	113	104	99	108
67	109	118	108	100	93	95	113	187	180	115	104	100	109
68	111	120	109	100	95	97	117	189	181	117	106	102	111
69	113	122	111	102	97	97	117	192	183	117	108	102	113
70	115	124	111	102	97	99	118	194	187	118	109	104	115
71	115	126	113	104	100	100	120	196	189	120	111	106	115
72	118	127	117	106	100	100	122	198	190	122	111	108	118
73	118	129	117	108	100	102	124	201	194	124	113	108	118
74	122	133	118	108	102	104	126	203	196	124	115	109	120
75	124	135	120	109	104	106	126	205	198	126	117	111	122
76	126	136	122	111	104	106	127	208	199	127	118	111	124
77	127	140	124	113	106	108	129	208	203	129	118	113	126
78	129	142	126	113	108	109	131	212	205	131	120	115	127
79	133	145	127	115	109	111	133	214	207	133	120	117	129
80	135	147	129	117	111	111	135	216	208	135	122	118	131
81	136	151	129	118	111	113	136	217	212	136	124	118	133
82	138	154	133	118	113	115	138	219	214	136	124	120	133
83	140	156	135	120	115	117	140	223	216	140	126	122	135
84	144	158	136	122	117	118	142	225	217	140	127	124	136
85	145	162	138	124	117	120	144	226	219	142	129	124	138
86	149	165	140	126	118	122	145	228	221	144	131	126	138
87	151	167	142	129	120	122	145	230	223	145	131	127	142
88	154	171	144	129	122	124	147	234	226	147	133	129	144
89	156	174	145	129	124	126	149	234	228	149	135	129	144
90	158	178	147	131	126	126	151	237	230	151	135	131	145
91	162	181	149	133	126	127	153	239	232	153	136	133	147

Time (min)	TC #69	TC #70	TC #71	TC #72	TC #73	TC #74	TC #75	TC #76	TC #77	TC #78	TC #79	TC #80	TC #81
92	165	185	151	135	127	129	154	241	234	153	138	135	149
93	169	190	153	136	129	131	154	243	237	154	140	135	151
94	171	192	154	138	131	133	156	246	239	156	142	136	151
95	174	198	158	140	133	133	158	248	241	158	142	138	153
96	178	201	160	142	135	135	160	250	243	160	144	140	154
97	181	205	162	144	135	136	162	252	244	162	145	142	156
98	185	210	163	145	136	138	163	255	248	163	147	144	158
99	189	214	165	147	138	140	165	257	250	165	149	144	160
100	192	219	169	149	140	142	167	259	252	167	151	147	162
101	196	223	171	151	142	144	169	261	253	169	153	147	163
102	201	226	174	153	144	144	171	262	257	171	153	149	165
103	205	232	174	154	145	145	172	266	259	172	154	151	167
104	208	235	178	154	147	147	172	268	261	174	156	153	169
105	212	241	181	158	149	149	174	270	264	174	158	154	169
106	214	244	185	160	151	151	178	271	266	178	160	156	172
107	219	248	187	162	153	153	180	275	268	180	162	158	174
108	223	253	190	163	154	154	181	279	271	181	163	160	176
109	226	259	194	165	156	156	183	280	273	183	163	162	178
110	232	262	196	169	158	158	185	284	277	185	167	162	180
111	235	268	199	171	162	160	187	286	279	187	169	165	181
112	241	273	201	172	163	162	189	288	282	189	171	165	183
113	244	277	205	174	165	163	190	689	284	192	172	167	185
114	250	282	208	178	167	165	192	700	288	192	172	169	187
115	253	288	212	180	169	167	194	711	291	196	174	171	189
116	259	293	214	181	171	169	198	723	295	199	176	172	190
117	262	297	216	185	172	169	199	730	297	201	178	174	192
118	266	302	221	187	176	172	201	741	298	203	181	176	196
119	271	307	223	190	178	174	203	748	304	207	183	180	198
120	277	315	226	192	181	176	207	756	307	208	185	180	199
121	282	318	230	196	183	178	208	763	309	210	187	183	201
122	286	324	234	198	187	180	210	768	315	214	189	185	203
123	291	329	237	201	190	181	214	772	318	216	190	187	207
124	295	334	241	205	192	183	216	779	320	219	192	189	208
125	300	340	243	207	196	185	217	784	325	223	194	190	210
126	304	345	248	210	199	187	221	784	329	225	198	194	212
127	309	351	252	214	201	189	223	786	333	228	199	196	216
128	315	356	255	217	205	190	226	792	336	232	201	198	217
129	318	361	259	219	208	192	228	795	340	234	205	199	219
130	322	367	261	223	212	194	232	799	343	237	207	201	223
131	327	372	266	226	216	196	235	802	349	241	208	205	225
132	331	378	270	230	219	198	237	806	352	244	212	207	228
133	336	381	273	234	223	201	241	806	356	248	214	208	230
134	340	387	277	237	226	205	244	806	361	252	216	212	234
135	345	392	280	239	316	207	246	806	365	255	219	214	235
136	349	397	284	243	322	210	250	810	370	259	221	217	239
137	354	401	288	246	331	214	253	806	419	262	225	221	241

Time (min)	TC #69	TC #70	TC #71	TC #72	TC #73	TC #74	TC #75	TC #76	TC #77	TC #78	TC #79	TC #80	TC #81
138	358	387	291	252	324	219	257	793	469	268	226	223	244
139	363	396	295	255	338	223	261	784	460	271	230	226	248
140	367	403	298	259	345	226	262	802	423	277	234	228	250
141	372	410	302	262	351	237	259	808	396	280	235	232	253
142	378	401	307	266	356	295	270	813	401	286	239	235	257
143	381	489	311	270	361	302	273	810	406	289	243	237	261
144	387	480	315	273	361	298	302	810	412	295	246	243	264
145	392	469	318	277	338	306	309	806	417	298	248	244	268
146	396	511	322	280	414	307	309	810	617	304	252	248	271
147	401	520	327	286	419	401	381	781	628	309	255	252	273
148	406	601	331	289	401	410	378	759	649	315	448	255	279
149	410	507	334	293	421	399	394	772	639	320	466	259	282
150	415	516	338	298	414	412	403	777	658	324	477	262	286
151	421	525	343	302	417	390	385	721	675	331	482	266	289
152	426	543	347	306	417	403	399	738	678	334	462	271	293
153	432	507	351	311	421	417	421	781	738	340	491	275	298
154	437	527	356	315	392	426	430	772	741	345	504	279	302
155	442	505	360	320	390	421	453	792	743	352	509	284	306
156	448	538	365	324	396	453	442	792	648	358	540	288	783
157	455	486	369	327	396	433	448	806	741	363	592	291	774
158	460	545	374	333	414	687	597	831	732	480	781	297	788
159	466	554	378	338	421	705	558	795	748	680	806	300	810
160	471	585	383	342	432	718	493	784	747	680	811	306	806
161	477	617	388	347	684	720	522	772	765	662	810	309	795
162	482	633	392	351	590	723	502	763	700	392	799	315	804
163	487	590	397	356	448	729	502	759	756	397	558	318	797
164	493	637	403	361	529	729	489	736	824	714	626	324	682
165	500	592	408	367	613	734	502	779	923	709	613	329	705
166	504	603	412	370	592	734	581	793	945	714	624	334	694
167	511	619	417	376	594	734	590	801	959	441	581	338	649
168	516	603	423	381	563	736	585	784	997	729	586	343	640
169	522	671	428	639	590	747	586	790	959	738	592	349	732
170	529	615	435	678	565	756	588	829	1008	723	595	354	716
171	534	619	439	691	766	750	525	793	820	741	586	347	772
172	540	685	500	698	779	743	592	766	822	761	592	376	797
173	547	673	495	703	777	784	707	831	829	763	648	408	797
174	552	738	563	709	788	671	640	817	820	748	761	603	831
175	558	736	568	754	694	653	567	781	916	770	763	480	833
176	565	723	594	777	775	669	640	772	844	777	709	624	846
177	570	693	604	745	613	676	651	862	833	779	756	633	849
178	576	712	563	801	680	660	568	858	957	792	703	667	849
179	583	752	606	811	687	687	655	806	937	792	714	649	826
180	588	761	648	775	714	702	612	765	934	808	765	657	855
Max Temp:	588	761	648	811	788	784	707	862	1008	808	811	667	855
Max Allowed:	397	397	397	397	397	397	397	397	397	397	397	397	397

Time (min)	TC #82	TC #83	TC #84	TC #85	TC #86	TC #87	TC #88	TC #89	TC #90	TC #91	TC #92	TC #93	TC #94	TC #95
0	72	72	72	70	70	70	68	68	70	70	70	72	72	72
1	72	72	70	70	70	70	68	68	70	70	70	72	72	72
2	72	72	72	70	70	70	68	70	70	70	70	70	72	72
3	72	72	70	70	70	70	68	68	70	70	70	72	72	72
4	72	72	70	70	70	70	68	70	70	70	70	72	72	72
5	72	72	72	70	70	70	68	68	70	70	70	72	72	72
6	72	72	72	70	70	70	70	68	70	70	70	70	72	72
7	72	72	72	72	70	70	68	70	70	70	70	72	72	72
8	72	72	70	70	70	70	68	68	70	70	70	72	72	72
9	72	72	70	72	70	70	68	70	70	70	70	72	72	72
10	72	72	72	72	70	70	68	68	70	70	70	72	72	72
11	72	72	72	72	70	70	68	68	70	70	70	70	72	72
12	72	70	70	72	70	70	68	70	70	70	70	72	72	72
13	72	72	70	70	70	70	68	68	70	70	70	72	70	72
14	72	72	70	70	70	70	68	68	70	70	70	72	72	72
15	72	70	72	70	70	70	68	70	70	70	70	70	72	72
16	72	70	72	70	72	70	68	68	70	70	70	72	70	70
17	72	70	72	72	70	70	68	68	70	70	70	72	72	72
18	72	72	70	72	70	70	68	68	70	70	72	70	72	72
19	72	72	72	72	70	70	70	70	68	70	70	72	70	72
20	72	72	72	70	70	70	68	70	70	70	70	70	72	72
21	72	72	70	72	70	68	70	68	70	68	70	70	72	72
22	72	72	72	72	70	70	68	68	70	70	70	70	72	70
23	72	72	72	72	70	70	68	70	70	68	70	70	72	72
24	72	72	72	72	70	70	70	70	70	70	70	70	72	72
25	72	72	72	72	72	70	68	68	70	70	70	70	70	72
26	72	72	72	72	72	70	70	68	70	70	70	72	72	72
27	72	72	72	72	72	70	68	70	70	70	70	70	72	72
28	72	72	72	72	72	70	70	70	68	70	70	72	70	72
29	72	72	72	72	72	70	68	70	68	70	70	70	72	72
30	73	72	72	72	72	72	68	68	70	70	68	72	70	72
31	73	72	72	72	72	72	68	68	70	70	72	70	72	72
32	73	73	72	73	72	70	68	68	70	70	70	72	72	72
33	73	72	72	73	72	72	68	68	70	70	70	70	72	72
34	73	73	72	72	72	72	68	68	70	70	70	72	72	72
35	75	73	72	73	72	72	68	68	70	70	70	70	72	72
36	75	73	73	73	73	72	70	70	70	70	70	72	72	72
37	75	73	73	73	73	72	68	68	70	70	72	72	72	72
38	75	73	73	75	73	72	68	68	70	70	70	72	72	72
39	75	73	73	75	73	72	68	70	70	70	70	70	72	72
40	77	75	73	75	75	72	68	68	70	70	70	70	70	72
41	77	75	75	75	75	73	68	68	70	70	70	72	72	72
42	79	75	75	75	75	73	68	70	70	70	72	70	72	72
43	79	75	75	77	77	73	70	68	70	70	70	72	72	72
44	77	75	75	77	77	73	70	68	70	70	70	72	72	72
45	79	77	77	79	77	73	70	70	70	70	70	72	72	72

Time (min)	TC #82	TC #83	TC #84	TC #85	TC #86	TC #87	TC #88	TC #89	TC #90	TC #91	TC #92	TC #93	TC #94	TC #95
46	81	77	77	79	79	73	70	70	70	70	70	70	72	72
47	81	77	77	79	79	75	70	68	70	70	72	72	72	72
48	82	79	79	81	79	75	70	68	70	72	70	72	72	72
49	82	79	79	79	79	75	70	70	70	72	70	72	72	72
50	82	79	79	82	81	77	70	68	70	70	70	72	72	73
51	84	81	79	82	82	77	70	70	70	72	70	72	72	73
52	86	81	81	82	82	77	70	70	70	72	70	72	72	73
53	86	81	81	84	82	77	70	68	70	72	70	72	72	73
54	88	82	82	84	84	79	72	70	70	72	72	72	72	73
55	88	84	82	86	84	79	70	70	70	72	72	72	72	73
56	90	84	84	88	86	79	70	70	72	72	72	72	73	73
57	90	84	84	88	86	81	70	70	70	72	72	72	72	75
58	91	86	86	88	88	81	72	70	72	72	72	73	72	75
59	93	86	86	90	88	81	72	70	72	72	72	72	73	75
60	93	88	88	91	90	82	72	70	72	72	72	72	73	75
61	93	88	88	93	90	82	72	70	72	72	72	72	73	75
62	95	90	90	93	91	82	72	70	72	72	72	73	73	75
63	97	91	90	93	91	84	72	70	72	73	73	73	73	75
64	99	91	91	95	93	84	72	70	72	73	72	73	73	77
65	100	93	93	97	93	84	72	70	72	73	72	73	75	77
66	100	95	93	99	95	86	73	70	72	73	73	73	75	77
67	100	95	95	99	97	86	72	70	72	73	73	73	75	77
68	102	97	97	100	97	88	73	72	73	73	73	73	75	77
69	104	97	97	100	99	88	73	70	72	73	73	75	75	79
70	104	99	99	102	99	88	73	70	72	73	73	75	75	79
71	106	99	100	104	100	90	73	72	73	75	73	75	77	79
72	108	100	100	106	100	90	75	72	73	75	73	75	79	79
73	109	102	102	108	102	90	73	72	73	75	75	75	77	81
74	109	102	104	108	104	91	75	72	75	75	75	75	77	81
75	111	104	106	109	104	91	75	72	73	75	75	77	79	81
76	113	104	106	111	106	93	75	72	73	77	75	77	79	82
77	113	108	108	111	108	93	75	72	75	77	75	77	79	82
78	115	108	108	113	108	95	77	73	75	77	77	77	79	82
79	117	109	109	115	109	95	77	72	75	77	77	79	81	84
80	118	111	111	115	111	97	77	72	75	77	77	79	81	82
81	118	111	113	117	111	97	77	73	75	79	77	79	81	84
82	120	113	113	118	111	99	77	73	77	79	79	79	81	86
83	122	115	115	120	113	99	79	72	77	79	79	81	82	86
84	122	115	117	122	115	100	79	73	77	79	79	79	82	86
85	124	117	115	122	115	100	79	73	77	79	79	81	82	88
86	126	118	118	124	117	102	79	75	77	81	81	81	84	88
87	126	118	120	126	118	102	79	75	79	81	81	82	84	88
88	127	120	122	126	120	104	81	75	79	81	81	82	84	90
89	129	122	124	129	120	106	81	75	79	82	81	82	86	90
90	131	122	126	129	122	106	81	75	79	82	82	84	86	90
91	133	124	127	131	124	108	81	75	79	82	82	84	88	91

Time (min)	TC #82	TC #83	TC #84	TC #85	TC #86	TC #87	TC #88	TC #89	TC #90	TC #91	TC #92	TC #93	TC #94	TC #95
92	133	126	127	133	126	108	82	75	81	82	82	84	88	93
93	135	126	127	135	127	108	82	75	81	84	82	84	88	93
94	136	127	131	136	126	109	82	77	81	84	84	86	88	95
95	138	129	131	136	127	111	84	77	81	86	84	88	90	95
96	140	131	133	138	129	111	84	77	82	86	86	88	90	95
97	140	133	135	140	131	113	84	77	82	86	86	88	91	97
98	142	133	136	140	133	113	84	79	82	88	86	88	91	99
99	144	135	136	142	133	115	86	79	82	88	86	90	93	99
100	145	136	138	144	135	117	86	79	84	88	88	90	93	100
101	147	138	140	145	136	117	86	79	84	88	88	90	93	100
102	149	140	142	147	138	118	86	79	84	90	88	91	95	102
103	149	142	144	149	140	118	88	81	86	90	90	91	95	102
104	151	142	144	151	140	120	88	81	86	90	90	93	97	104
105	153	144	145	153	142	120	90	81	86	91	91	93	99	104
106	154	145	147	154	142	122	90	82	86	91	91	95	99	106
107	154	147	149	156	144	124	90	82	88	93	93	95	100	108
108	158	149	151	158	145	124	91	82	88	93	93	95	100	108
109	158	149	153	158	147	126	91	82	88	93	93	97	102	109
110	160	151	154	160	149	126	91	84	90	95	95	97	102	111
111	162	153	156	163	151	127	93	84	90	95	95	99	104	111
112	163	154	158	163	153	129	93	84	91	97	97	99	104	113
113	165	156	158	165	154	129	93	84	91	97	97	100	106	113
114	167	158	160	169	156	131	93	84	91	99	97	100	106	115
115	169	160	163	171	158	133	95	84	93	99	99	102	108	117
116	171	162	163	172	158	135	97	86	93	100	99	102	108	117
117	172	163	165	174	162	135	97	86	93	100	100	104	109	118
118	174	165	167	176	162	136	97	86	95	100	100	104	111	120
119	176	167	169	178	163	138	99	88	95	102	102	106	111	120
120	180	169	171	180	165	138	99	88	95	102	102	108	113	124
121	181	171	172	183	169	140	99	90	97	104	104	108	115	124
122	183	172	176	185	171	142	100	90	97	104	104	108	115	126
123	185	174	178	187	172	142	100	90	99	106	106	109	117	126
124	187	176	180	190	174	144	102	90	99	106	106	111	117	127
125	189	178	181	192	176	145	102	91	99	108	108	111	118	129
126	190	180	183	194	178	147	102	91	100	108	108	113	120	131
127	192	181	185	198	685	147	104	91	100	109	109	115	120	131
128	196	183	187	199	723	149	104	93	100	109	109	115	122	133
129	198	187	190	201	738	151	106	93	102	111	111	117	124	135
130	199	189	192	205	325	153	106	93	102	111	111	117	124	136
131	201	190	196	207	727	154	108	95	104	113	113	118	126	138
132	205	194	198	210	444	156	108	95	104	113	115	118	127	140
133	207	196	201	214	259	158	108	95	106	115	115	120	129	142
134	208	198	205	216	343	158	109	97	106	115	115	122	129	142
135	212	541	207	219	201	160	109	97	108	117	117	122	131	144
136	214	545	210	223	426	162	111	97	108	117	118	124	133	145
137	217	567	214	225	732	163	111	99	109	118	118	126	135	147

Time (min)	TC #82	TC #83	TC #84	TC #85	TC #86	TC #87	TC #88	TC #89	TC #90	TC #91	TC #92	TC #93	TC #94	TC #95
138	219	541	212	228	772	165	113	100	109	118	120	126	135	149
139	223	572	216	232	774	169	113	100	109	120	120	127	136	151
140	226	581	219	235	763	171	115	100	111	122	122	129	138	153
141	228	588	223	239	772	172	115	100	111	122	124	131	140	154
142	291	664	597	243	779	174	117	102	113	124	124	131	142	156
143	705	723	608	244	786	176	118	102	115	124	126	133	144	158
144	750	705	640	248	793	178	118	104	115	126	126	135	144	160
145	754	608	590	252	795	181	120	104	115	126	127	136	145	162
146	756	694	642	255	795	183	120	106	117	127	129	136	147	162
147	747	680	678	255	801	190	122	106	118	129	131	138	149	163
148	752	736	682	250	801	401	122	106	118	129	131	140	151	167
149	738	633	687	253	811	417	124	108	118	131	133	140	153	169
150	741	702	693	257	811	426	126	108	120	133	135	142	154	171
151	712	738	694	262	811	428	126	109	122	133	135	144	154	172
152	718	693	680	264	822	406	615	109	122	135	136	145	156	174
153	738	729	693	266	828	441	633	111	124	136	138	147	158	176
154	732	372	694	271	829	450	631	111	124	136	140	149	160	178
155	747	374	703	273	795	455	131	111	126	138	140	149	162	180
156	678	376	709	291	430	441	133	113	126	140	142	151	163	181
157	741	374	721	291	574	451	700	115	127	140	144	153	165	183
158	770	401	716	284	585	387	711	115	129	142	144	154	167	185
159	757	399	716	288	518	381	356	115	129	144	145	156	169	189
160	756	410	727	291	770	370	136	117	131	144	147	158	171	190
161	750	442	729	297	684	372	334	117	133	145	149	158	172	192
162	752	441	732	297	565	372	714	118	133	147	149	160	174	194
163	752	705	739	300	561	491	739	118	135	147	151	162	176	196
164	739	734	745	302	874	496	745	120	135	149	153	163	178	198
165	763	734	747	306	878	500	754	120	136	151	154	165	180	201
166	784	739	747	307	860	491	770	122	138	153	156	167	183	203
167	784	738	754	320	878	496	774	122	138	154	158	169	183	205
168	765	748	757	318	873	504	774	124	140	154	158	171	187	208
169	777	734	759	316	835	511	768	124	140	156	160	172	189	210
170	797	747	763	320	882	511	802	126	142	158	162	174	190	212
171	777	757	770	324	880	529	801	126	144	158	163	176	192	214
172	772	738	743	324	874	538	752	127	144	160	165	178	194	217
173	799	738	766	331	842	532	714	127	145	162	167	180	196	219
174	793	747	739	331	849	504	703	129	147	163	167	181	198	223
175	788	745	768	334	855	502	709	129	147	165	169	183	201	225
176	792	745	747	352	840	536	703	131	149	167	171	185	203	226
177	826	756	768	343	847	523	707	133	151	169	172	187	205	230
178	824	763	770	343	853	549	711	133	151	169	174	189	208	234
179	820	770	783	507	858	730	716	135	153	171	176	190	210	235
180	822	748	786	405	858	777	720	135	154	172	178	192	212	239
Max Temp:	826	770	786	507	882	777	802	135	154	172	178	192	212	239
Max Allowed:	397	397	397	395	395	395	393	393	395	395	395	397	397	397

Time (min)	TC #96	TC #97	TC #98	TC #99	TC #100	TC #101	TC #102	TC #103	TC #104	TC #105	TC #106	TC #107
0	72	72	72	72	72	72	72	72	72	72	72	72
1	72	72	72	72	72	72	72	72	72	72	72	72
2	72	72	72	72	72	72	72	72	72	72	72	72
3	72	72	72	72	72	72	72	72	72	72	72	72
4	72	72	72	72	72	72	72	72	72	72	72	72
5	72	72	72	72	72	72	72	72	72	72	72	72
6	72	72	72	72	72	70	72	72	72	72	72	72
7	72	72	72	72	72	72	72	72	72	72	72	72
8	72	72	72	73	72	72	72	72	72	72	72	72
9	72	72	72	72	72	72	72	72	72	72	72	72
10	72	72	72	72	72	72	72	72	72	72	70	72
11	72	72	72	72	72	72	72	72	72	72	72	72
12	72	72	72	72	72	72	72	72	72	72	72	72
13	72	72	72	72	72	72	72	72	72	72	70	72
14	72	72	72	72	72	72	72	72	72	72	72	72
15	72	72	72	72	72	72	72	72	72	72	70	72
16	72	72	72	72	72	72	72	72	72	72	70	70
17	72	72	72	72	72	72	72	72	72	72	72	72
18	72	72	72	72	72	72	72	72	72	72	70	72
19	72	72	72	72	72	72	72	72	72	72	70	72
20	72	72	72	72	72	72	72	72	72	70	72	72
21	72	72	72	72	72	72	72	72	72	70	72	70
22	72	72	72	72	72	72	72	72	72	72	70	72
23	72	72	72	72	72	72	72	72	72	72	72	72
24	72	72	72	72	72	72	72	72	72	72	72	72
25	72	72	72	72	72	72	72	72	72	72	72	72
26	72	72	72	73	72	72	72	72	72	72	72	72
27	72	72	72	72	72	72	72	72	72	72	72	72
28	72	73	72	72	72	72	72	72	72	72	72	70
29	72	72	72	72	72	72	72	72	72	72	72	70
30	72	72	72	72	72	72	72	72	72	72	72	72
31	72	72	72	72	72	72	72	72	72	72	72	70
32	72	73	72	73	72	72	72	72	72	70	72	72
33	72	73	72	72	72	72	72	72	72	72	70	72
34	72	73	72	72	72	72	72	72	72	72	72	72
35	72	73	72	72	72	72	72	72	72	72	72	70
36	72	73	72	72	72	72	72	72	72	72	72	72
37	72	73	72	72	73	72	72	72	72	72	72	72
38	72	73	72	72	72	72	72	72	72	72	72	72
39	72	73	73	72	72	72	73	72	72	73	72	72
40	73	73	73	73	72	72	73	72	72	72	72	72
41	73	75	73	73	73	72	73	73	73	73	72	72
42	73	75	73	73	72	73	73	73	73	73	72	72
43	73	75	73	73	73	73	73	73	73	73	72	72
44	73	75	73	73	73	73	73	73	73	73	72	73
45	73	75	73	73	73	73	73	73	73	73	72	72

Time (min)	TC #96	TC #97	TC #98	TC #99	TC #100	TC #101	TC #102	TC #103	TC #104	TC #105	TC #106	TC #107
46	73	75	73	73	73	73	73	73	73	73	72	72
47	73	77	73	73	73	73	75	73	73	75	73	73
48	73	77	73	73	73	73	73	75	73	75	73	73
49	75	77	75	73	73	75	75	75	73	75	73	73
50	73	77	75	75	75	75	75	75	75	75	73	73
51	75	77	75	75	75	75	75	75	75	75	73	73
52	75	79	75	75	75	75	75	75	75	75	73	73
53	75	79	75	75	75	75	77	77	75	77	75	73
54	75	79	75	75	75	75	77	77	75	77	75	75
55	75	79	77	75	75	75	77	77	77	77	75	75
56	77	81	77	75	75	77	79	77	77	77	75	75
57	75	81	77	75	75	77	79	79	77	77	75	75
58	75	81	77	75	77	77	79	79	77	77	77	75
59	77	82	79	77	77	79	79	79	79	79	77	75
60	77	82	79	77	77	79	81	79	79	79	77	77
61	79	82	79	77	77	79	81	81	79	81	77	77
62	79	84	79	79	79	79	81	81	79	81	79	77
63	79	84	81	79	79	79	82	81	81	81	79	79
64	79	84	81	79	79	81	82	82	81	82	79	79
65	79	86	82	79	79	81	82	82	81	82	79	79
66	81	86	81	79	79	81	84	82	82	82	81	79
67	81	88	82	81	81	82	86	82	82	82	81	81
68	82	88	82	81	81	82	86	84	84	84	81	81
69	82	90	84	82	81	84	86	84	84	84	82	81
70	82	90	84	82	82	82	88	86	84	86	82	82
71	84	90	84	82	82	84	88	86	86	86	82	82
72	84	91	86	84	82	86	90	88	86	88	84	82
73	84	91	86	84	84	86	90	88	86	88	84	84
74	86	91	86	84	84	86	90	90	88	88	86	84
75	86	93	88	86	86	88	91	90	90	90	86	84
76	86	95	88	86	86	90	93	90	90	90	88	86
77	86	95	90	86	86	90	93	91	90	91	88	86
78	88	97	90	88	88	90	93	93	91	91	88	88
79	90	97	90	90	88	91	95	93	93	93	90	88
80	90	99	93	90	90	93	97	95	93	93	90	90
81	90	100	93	90	90	93	97	95	95	95	90	90
82	91	100	93	91	91	93	99	97	95	95	91	90
83	91	100	95	91	91	95	99	97	97	97	93	91
84	93	102	95	93	91	97	100	99	97	97	93	91
85	93	104	95	93	93	97	100	99	99	99	93	91
86	93	106	97	95	93	99	102	100	100	100	95	93
87	95	106	99	97	95	99	104	100	100	100	95	95
88	97	108	99	97	95	100	104	102	102	100	97	95
89	97	109	100	97	97	100	106	104	102	102	97	95
90	99	109	100	99	99	102	108	106	104	104	99	97
91	99	111	102	100	99	104	109	106	104	104	100	99

Time (min)	TC #96	TC #97	TC #98	TC #99	TC #100	TC #101	TC #102	TC #103	TC #104	TC #105	TC #106	TC #107
92	100	113	104	100	100	104	109	106	106	106	100	99
93	100	113	104	102	102	106	111	108	108	108	102	100
94	102	115	106	104	102	108	111	109	109	108	102	102
95	102	117	108	104	104	108	113	111	109	109	104	102
96	104	117	109	106	104	109	115	111	111	109	104	102
97	106	118	109	106	106	111	117	113	111	111	106	104
98	106	120	111	108	108	113	118	115	113	111	108	106
99	108	120	113	109	108	113	118	115	115	113	108	106
100	108	122	115	111	109	115	120	117	117	115	109	108
101	109	124	115	111	111	115	122	118	117	117	109	108
102	111	126	117	113	111	118	122	118	118	117	111	109
103	111	126	117	115	113	118	124	120	120	118	113	111
104	113	129	118	117	115	120	126	122	122	120	113	111
105	115	129	120	118	117	122	127	124	122	120	115	113
106	115	131	122	118	118	124	129	124	124	122	115	113
107	117	133	124	120	118	124	131	126	126	124	117	115
108	118	135	126	122	120	126	133	127	126	126	118	117
109	120	136	126	124	124	129	133	129	127	126	120	118
110	120	138	129	126	124	129	135	129	129	127	120	118
111	122	140	129	126	126	131	136	131	131	129	122	120
112	122	140	133	129	127	133	138	133	133	131	122	122
113	124	144	133	129	129	135	140	135	135	131	124	122
114	126	145	135	133	129	136	142	136	136	133	126	124
115	127	147	136	135	131	138	144	138	138	135	127	126
116	129	147	138	135	133	140	145	138	140	136	129	126
117	131	149	140	136	135	142	147	140	140	138	129	127
118	133	151	142	138	136	144	149	142	142	138	131	129
119	133	153	144	140	138	145	153	144	144	140	133	131
120	135	156	145	144	142	147	154	145	145	142	135	133
121	136	156	147	145	144	149	156	147	147	144	136	133
122	138	160	149	147	145	153	158	149	151	145	138	135
123	140	162	151	149	147	154	160	151	151	147	140	136
124	142	163	154	151	149	156	162	153	154	149	140	138
125	144	165	156	153	151	158	165	154	156	151	142	140
126	144	167	158	154	153	160	167	158	158	153	144	142
127	147	169	160	158	154	162	169	158	160	154	145	144
128	147	172	162	160	156	165	172	162	162	156	147	144
129	149	174	165	162	160	167	174	163	163	158	149	145
130	151	176	167	163	160	169	176	165	167	162	151	147
131	153	178	169	165	163	172	180	167	169	163	153	151
132	154	181	171	169	167	174	181	171	171	165	154	153
133	156	181	174	171	169	176	185	172	172	167	156	153
134	158	185	176	172	171	180	187	174	176	169	158	154
135	160	187	178	176	174	181	190	176	178	171	162	156
136	162	189	181	178	176	185	192	180	181	174	162	160
137	165	190	183	181	180	187	196	181	183	176	165	162

Time (min)	TC #96	TC #97	TC #98	TC #99	TC #100	TC #101	TC #102	TC #103	TC #104	TC #105	TC #106	TC #107
138	165	194	185	183	181	190	199	183	187	178	167	163
139	169	196	189	187	183	194	201	187	189	181	169	165
140	171	198	190	189	187	196	205	190	190	183	171	167
141	172	201	194	190	189	199	208	192	194	187	174	169
142	174	203	196	194	192	201	212	196	198	189	176	172
143	176	205	198	198	196	205	214	198	201	192	180	174
144	178	208	201	199	198	208	217	201	203	194	181	176
145	180	210	203	203	199	210	221	205	207	198	183	180
146	183	214	207	205	203	214	225	207	208	199	187	181
147	185	216	208	208	207	217	228	210	212	203	189	185
148	187	219	212	212	210	219	232	214	216	205	192	187
149	189	221	216	214	212	223	235	217	219	208	194	190
150	190	225	217	217	216	226	239	221	223	212	198	192
151	194	226	221	221	219	230	243	225	226	216	201	196
152	196	230	225	223	223	234	246	228	230	219	203	198
153	198	234	226	226	225	237	250	232	234	223	207	201
154	201	235	230	230	228	241	253	235	237	226	210	205
155	203	239	234	234	232	244	259	239	241	230	214	208
156	205	243	237	237	235	248	262	243	244	234	217	210
157	208	244	241	239	239	252	266	246	248	237	219	214
158	210	248	243	243	243	255	270	250	252	241	223	217
159	214	252	246	246	246	259	275	255	255	244	226	221
160	216	255	250	250	250	262	279	259	259	248	230	225
161	217	259	253	253	253	266	284	262	264	252	234	226
162	221	262	257	257	257	270	288	268	268	257	239	230
163	223	264	261	261	261	273	291	271	271	261	241	234
164	226	268	264	264	264	279	297	277	275	266	246	237
165	230	271	268	268	268	282	300	280	280	270	250	241
166	232	275	271	273	273	286	306	286	284	273	253	244
167	235	279	275	277	277	289	309	291	289	277	257	248
168	237	282	279	280	280	295	315	295	293	282	261	252
169	241	286	282	284	286	298	320	300	298	286	266	255
170	244	291	288	288	289	304	324	304	302	291	270	259
171	246	295	291	293	293	307	329	309	307	295	273	264
172	250	298	295	297	298	313	334	315	313	300	279	268
173	253	302	298	302	302	316	338	320	316	306	282	271
174	257	306	304	306	307	322	343	324	322	309	288	275
175	259	309	307	309	311	327	349	331	327	315	291	280
176	262	313	311	315	316	331	354	334	331	320	297	284
177	266	316	316	318	320	336	360	342	338	325	300	288
178	270	322	320	324	325	342	363	347	342	331	306	291
179	273	325	324	327	331	345	369	352	347	336	309	297
180	275	329	329	333	334	351	374	358	352	342	315	300
Max Temp:	275	329	329	333	334	351	374	358	352	342	315	300
Max Allowed:	397	397	397	397	397	397	397	397	397	397	397	397

Time (min)	TC #108	TC #109	TC #110	TC #111	TC #112	TC #113	TC #114	TC #115	TC #116	TC #117	TC #118
0	70	70	70	70	70	68	68	68	70	72	72
1	72	70	70	70	70	68	68	68	70	72	72
2	70	70	70	70	68	68	68	68	70	72	72
3	72	70	70	70	68	68	68	68	70	72	72
4	72	70	70	70	68	68	68	68	70	72	72
5	70	70	70	70	70	68	68	68	70	72	72
6	70	70	72	70	68	70	68	68	70	72	73
7	70	70	70	70	70	68	68	68	70	72	72
8	70	72	70	70	68	68	68	68	70	72	73
9	70	70	70	70	68	68	68	68	70	72	72
10	70	70	70	70	70	68	68	68	70	72	72
11	70	70	70	68	68	68	68	68	70	72	73
12	70	70	70	70	68	68	68	68	70	72	72
13	70	70	70	68	68	68	68	68	70	72	72
14	70	70	70	68	68	68	68	68	70	72	72
15	70	70	70	68	68	68	68	68	70	72	72
16	70	72	70	68	68	68	68	68	70	72	72
17	70	70	70	70	70	68	68	68	70	72	72
18	70	72	70	70	68	68	68	68	70	72	73
19	70	70	70	70	68	68	68	68	70	72	73
20	72	72	70	70	68	68	68	68	70	72	72
21	70	72	70	70	68	68	68	68	70	70	73
22	72	72	70	70	68	68	68	68	70	72	72
23	70	72	70	70	68	68	68	68	70	72	72
24	70	70	70	70	68	68	68	68	70	72	73
25	72	70	70	70	68	68	68	68	70	72	72
26	70	70	70	70	70	68	68	68	70	72	73
27	72	72	70	68	68	68	68	68	70	72	73
28	70	70	70	68	68	68	68	68	70	72	73
29	70	70	70	70	68	68	68	68	72	72	73
30	70	70	70	70	70	68	68	68	72	73	73
31	70	70	70	70	68	68	68	68	70	73	73
32	70	72	70	70	70	68	68	68	72	73	73
33	72	72	70	70	70	68	68	68	72	73	75
34	72	70	70	70	68	68	68	68	72	73	75
35	70	70	70	70	70	68	68	68	72	73	75
36	72	72	70	70	68	68	68	68	72	75	75
37	72	70	70	70	68	68	68	68	72	75	75
38	72	70	70	68	68	68	68	68	72	75	75
39	72	72	70	70	68	68	68	68	72	75	77
40	72	72	70	70	68	68	68	68	73	75	77
41	72	70	70	68	70	68	68	68	72	77	77
42	72	72	70	68	70	68	68	68	73	77	79
43	72	72	72	70	68	68	68	68	73	77	79
44	72	72	70	70	68	68	68	68	73	79	81
45	72	72	70	70	68	68	68	68	73	79	81

Time (min)	TC #108	TC #109	TC #110	TC #111	TC #112	TC #113	TC #114	TC #115	TC #116	TC #117	TC #118
46	72	72	72	70	70	68	68	70	75	79	81
47	72	72	72	70	70	68	68	70	73	81	82
48	72	72	72	70	68	68	68	70	75	81	84
49	72	72	72	70	70	68	68	68	75	82	84
50	72	72	72	70	70	68	68	70	75	82	84
51	73	72	72	70	70	70	68	70	77	84	86
52	73	72	72	70	70	70	68	70	77	84	86
53	73	72	72	70	70	68	68	70	77	86	88
54	73	72	72	70	70	68	68	70	77	86	90
55	73	73	72	70	70	70	68	70	79	88	90
56	73	73	72	70	70	70	68	72	79	88	91
57	73	73	73	70	70	68	68	70	79	90	93
58	73	73	73	70	70	70	68	70	81	91	95
59	75	73	73	72	70	70	68	72	81	91	97
60	75	73	73	72	70	70	68	72	82	93	97
61	75	75	73	72	70	70	68	72	82	95	100
62	75	73	73	72	70	70	68	72	82	95	100
63	75	75	73	72	70	70	68	72	84	97	102
64	77	75	73	72	70	70	68	72	84	99	104
65	77	75	73	72	72	70	68	72	86	100	106
66	77	75	75	73	70	70	68	72	86	100	108
67	77	75	75	73	70	70	70	72	88	102	109
68	79	77	75	72	72	70	70	73	88	106	111
69	79	77	75	73	72	70	70	73	90	106	113
70	79	77	77	73	72	72	70	73	90	108	115
71	79	77	77	73	72	70	70	73	91	109	117
72	81	79	77	73	72	72	70	73	93	111	118
73	81	79	77	75	72	72	70	75	93	113	120
74	81	79	77	75	72	72	72	75	95	115	122
75	82	81	79	75	73	72	70	75	95	117	126
76	82	81	79	75	73	72	70	75	97	118	127
77	82	81	79	75	73	72	70	77	99	120	129
78	84	82	79	75	73	72	70	77	99	122	131
79	84	82	81	77	73	72	70	77	100	124	133
80	86	82	81	77	73	73	70	77	102	126	135
81	86	84	82	77	73	72	72	77	102	127	136
82	86	84	82	79	75	73	70	79	104	129	140
83	88	84	82	79	75	73	72	79	104	131	142
84	88	86	82	79	75	73	72	79	106	133	144
85	88	86	82	79	75	73	70	81	108	135	145
86	90	86	84	79	75	75	72	81	108	136	147
87	90	88	84	81	77	75	72	81	109	138	151
88	91	88	84	81	77	75	72	82	111	140	153
89	91	90	86	81	77	75	73	82	113	142	154
90	93	90	86	82	77	75	73	82	113	144	156
91	93	90	88	82	79	75	73	82	115	145	160

Time (min)	TC #108	TC #109	TC #110	TC #111	TC #112	TC #113	TC #114	TC #115	TC #116	TC #117	TC #118
92	93	91	88	82	77	75	73	84	117	147	162
93	95	91	88	82	79	75	73	84	118	149	165
94	97	93	90	84	79	77	73	86	118	151	167
95	97	93	90	84	81	77	73	86	120	154	169
96	99	95	91	86	81	77	75	86	122	154	171
97	99	95	91	86	81	77	75	88	124	156	174
98	100	95	91	86	81	79	75	88	126	160	176
99	100	97	93	86	82	79	75	88	126	162	178
100	102	99	93	88	82	79	75	90	127	163	181
101	102	99	95	88	82	79	75	90	129	165	183
102	104	100	95	90	84	79	77	90	131	167	185
103	106	100	97	90	84	81	77	91	133	169	187
104	106	102	97	90	84	81	77	91	133	171	190
105	106	102	97	90	84	81	77	93	135	172	192
106	108	104	99	91	86	81	77	93	135	176	196
107	109	104	100	91	86	82	77	95	138	178	198
108	109	106	100	93	86	82	79	95	138	180	201
109	111	106	100	93	88	82	79	95	140	181	203
110	111	108	102	95	88	84	79	97	142	183	205
111	113	108	102	95	88	84	79	99	144	185	208
112	115	109	104	97	88	84	79	99	145	187	210
113	115	111	104	97	90	84	81	99	147	189	214
114	117	111	106	99	90	86	81	100	147	192	216
115	118	111	106	99	90	86	81	100	151	194	219
116	118	113	108	99	91	86	81	100	151	196	221
117	120	115	109	100	91	86	81	102	153	198	223
118	122	115	109	100	93	88	82	102	153	199	226
119	122	117	111	102	93	88	82	104	154	203	228
120	124	118	111	102	93	90	82	104	156	205	232
121	126	118	113	104	95	90	82	106	158	207	234
122	127	120	115	104	95	90	84	106	160	208	237
123	127	122	115	106	97	90	84	108	162	210	239
124	129	122	117	106	97	91	84	108	163	212	243
125	131	124	118	108	97	91	84	109	165	216	244
126	133	126	118	108	99	93	86	111	167	217	248
127	133	127	120	109	100	93	86	111	167	219	252
128	135	129	122	109	100	93	86	111	169	221	253
129	136	129	122	111	100	95	88	113	171	223	257
130	138	131	124	111	102	95	88	113	172	226	259
131	140	133	126	113	102	95	88	115	174	226	262
132	142	133	126	115	104	97	90	115	176	228	266
133	144	136	127	115	104	97	90	117	178	232	268
134	145	136	129	117	106	97	90	117	180	234	271
135	145	138	129	118	106	99	91	118	180	235	273
136	147	140	131	118	108	100	91	118	181	237	277
137	151	142	133	120	108	100	91	120	183	239	280

Time (min)	TC #108	TC #109	TC #110	TC #111	TC #112	TC #113	TC #114	TC #115	TC #116	TC #117	TC #118
138	153	144	135	122	109	100	93	120	185	243	284
139	154	145	136	122	109	102	93	122	187	244	288
140	156	147	138	124	111	102	93	122	189	246	289
141	158	149	140	126	111	104	93	124	190	250	293
142	160	151	142	126	113	104	95	126	190	250	297
143	162	153	144	127	115	106	95	126	192	252	298
144	165	154	145	129	115	106	97	127	194	255	302
145	167	156	147	131	117	108	97	127	196	257	306
146	169	158	149	133	117	108	97	129	198	259	309
147	171	162	151	133	118	109	99	129	198	261	313
148	174	163	153	135	118	109	99	131	199	262	315
149	176	165	154	136	120	111	100	131	201	266	318
150	178	167	156	138	122	113	100	133	203	268	320
151	181	171	158	140	124	113	100	133	205	270	324
152	183	172	162	142	126	115	102	135	207	271	327
153	187	174	163	144	126	115	102	135	208	273	329
154	189	178	165	145	127	117	104	136	208	275	333
155	192	180	167	147	129	118	104	136	210	279	336
156	194	181	169	149	131	118	106	138	212	280	340
157	198	185	172	151	133	120	106	140	214	282	343
158	201	187	174	153	133	122	108	140	216	286	345
159	203	190	176	154	135	122	108	140	216	288	349
160	207	194	180	156	136	124	109	142	217	289	352
161	210	196	181	158	138	126	111	144	219	293	356
162	212	199	183	162	140	127	111	144	221	295	360
163	216	201	187	163	142	127	113	145	223	297	363
164	219	205	190	165	144	129	113	145	223	298	367
165	223	208	192	167	145	131	115	147	225	302	372
166	226	210	194	169	147	133	115	147	226	304	376
167	230	214	198	171	147	133	117	149	228	307	379
168	232	216	199	172	151	135	118	149	230	309	385
169	235	219	203	176	153	136	118	151	232	313	388
170	239	221	205	178	154	138	120	151	234	316	392
171	243	225	208	180	156	140	120	153	235	318	397
172	246	228	210	183	158	140	122	154	237	322	401
173	250	230	214	185	160	142	122	154	239	325	405
174	253	234	216	187	162	144	124	156	243	329	410
175	257	237	219	189	163	145	126	156	244	331	414
176	261	241	221	192	165	147	126	158	246	334	417
177	264	243	225	194	167	149	127	158	248	338	423
178	268	246	226	196	169	151	129	160	250	342	426
179	273	250	230	198	171	151	129	160	252	345	430
180	277	253	234	201	174	153	131	162	255	349	432
Max Temp:	277	253	234	201	174	153	131	162	255	349	432
Max Allowed:	395	395	395	395	395	393	393	393	395	397	397

Time (min)	TC #119	TC #120	TC #121	TC #122	TC #123	TC #124	TC #125	TC #126	TC #127	TC #128	TC #129
0	73	73	73	73	73	73	73	73	73	73	73
1	73	73	73	73	73	73	73	73	73	73	73
2	73	73	73	73	73	73	73	73	73	73	73
3	73	73	73	73	73	73	73	73	73	73	73
4	73	73	73	73	73	73	73	73	73	73	73
5	73	73	73	73	73	73	73	73	73	73	73
6	72	73	73	73	73	73	73	73	73	73	73
7	73	73	73	73	73	73	73	73	73	73	73
8	73	73	73	73	73	73	73	73	73	73	73
9	73	73	73	73	73	73	73	73	73	73	73
10	73	73	73	73	73	73	73	73	73	73	73
11	72	73	73	73	73	73	73	73	73	73	73
12	73	73	73	73	73	73	73	73	73	73	73
13	73	73	73	73	73	73	73	73	73	73	73
14	73	73	73	73	73	73	73	73	73	73	75
15	73	73	72	73	73	73	73	73	73	73	75
16	73	73	73	73	73	73	73	73	73	73	73
17	73	73	73	73	73	73	73	73	73	73	73
18	73	73	72	73	73	73	73	73	73	73	73
19	73	73	73	73	75	73	73	73	73	75	73
20	73	73	73	73	73	73	73	75	73	73	75
21	73	73	73	73	73	73	73	75	75	75	75
22	73	73	73	73	73	75	73	75	75	75	75
23	73	73	73	73	73	75	75	73	75	75	75
24	73	73	73	73	73	73	75	75	75	75	75
25	73	73	75	75	75	73	75	75	75	75	75
26	73	75	75	73	75	75	75	75	77	75	77
27	73	73	75	73	75	75	77	75	77	75	75
28	75	73	75	73	75	75	75	75	77	77	77
29	75	75	75	75	75	75	75	77	77	77	77
30	75	75	75	73	75	75	77	77	77	77	77
31	75	75	75	77	75	75	77	77	79	77	77
32	75	75	77	75	75	77	77	77	81	79	79
33	75	75	77	75	75	77	77	77	81	79	79
34	75	77	77	77	77	77	79	79	82	81	81
35	75	77	77	77	77	79	79	79	82	81	81
36	77	79	79	77	79	79	79	81	82	82	81
37	77	79	79	79	77	79	81	81	84	82	82
38	77	79	79	79	79	79	81	82	86	84	82
39	79	79	79	79	79	81	81	82	88	84	84
40	79	79	81	79	79	81	82	84	88	86	84
41	79	81	81	81	81	81	84	86	90	86	86
42	81	81	81	81	81	82	84	86	91	88	86
43	81	82	82	81	82	82	86	88	93	90	88
44	81	82	82	82	82	82	86	90	95	90	90
45	82	84	84	82	82	84	88	90	97	91	91

Time (min)	TC #119	TC #120	TC #121	TC #122	TC #123	TC #124	TC #125	TC #126	TC #127	TC #128	TC #129
46	84	84	84	84	82	84	88	91	99	93	93
47	84	84	86	84	84	86	90	91	100	95	95
48	84	86	86	86	86	88	91	93	102	97	95
49	86	86	88	86	86	88	93	95	104	99	97
50	86	88	90	86	88	90	93	97	106	100	99
51	90	90	90	88	88	90	95	99	108	102	100
52	90	90	91	90	90	91	97	100	111	104	102
53	90	91	93	90	91	93	99	102	113	106	104
54	91	93	93	93	91	95	100	104	115	108	106
55	93	93	95	93	93	95	102	106	118	111	108
56	95	95	97	93	95	97	104	109	120	113	109
57	97	97	99	97	97	99	108	109	122	115	111
58	97	99	100	97	99	100	109	113	126	118	115
59	99	100	102	99	99	102	111	115	127	120	117
60	100	100	102	100	100	104	113	118	129	122	118
61	100	102	104	102	102	106	115	120	133	126	120
62	104	104	106	104	104	108	117	124	136	127	124
63	104	106	108	106	106	109	118	126	138	131	126
64	106	108	109	108	108	111	122	127	140	133	129
65	109	109	111	108	109	113	124	131	144	136	131
66	109	111	113	111	111	115	126	133	147	138	133
67	111	113	115	113	113	117	127	135	151	140	136
68	115	115	117	115	115	118	131	138	154	144	138
69	115	117	118	117	117	122	133	142	156	147	140
70	118	118	122	118	118	124	136	144	160	149	144
71	120	120	124	120	120	126	138	147	162	153	145
72	122	122	126	122	122	129	142	149	167	156	149
73	124	126	127	126	126	129	144	153	169	158	151
74	126	127	129	127	127	131	145	156	172	162	154
75	129	129	131	129	131	135	149	158	176	165	158
76	131	131	135	133	133	136	151	162	180	167	160
77	133	133	136	135	135	140	154	165	183	171	162
78	135	136	138	136	136	142	156	167	187	172	165
79	136	138	140	140	140	144	160	171	190	176	169
80	138	140	144	142	142	147	162	174	196	178	171
81	142	142	147	144	144	149	165	176	201	181	174
82	144	145	149	147	147	151	167	180	205	185	176
83	144	147	151	149	149	154	171	183	210	189	180
84	147	149	154	151	151	156	174	187	216	192	180
85	151	153	156	154	154	158	176	190	221	196	183
86	153	154	158	156	156	162	180	194	228	201	187
87	154	158	160	160	158	163	181	198	235	205	190
88	158	160	163	162	162	167	185	203	243	208	194
89	160	162	167	165	165	169	189	207	250	214	198
90	162	165	169	169	167	172	190	210	259	219	201
91	165	167	172	171	169	176	194	216	268	225	205

Time (min)	TC #119	TC #120	TC #121	TC #122	TC #123	TC #124	TC #125	TC #126	TC #127	TC #128	TC #129
92	167	169	174	172	172	178	198	219	277	230	208
93	169	172	176	176	174	180	201	225	286	235	212
94	171	174	180	178	176	181	205	230	297	241	216
95	174	178	183	181	180	185	208	234	307	246	219
96	176	180	185	183	183	187	210	241	318	253	223
97	180	183	187	187	185	190	214	246	329	259	226
98	181	185	190	189	187	194	217	252	340	266	232
99	183	189	192	192	190	196	223	257	352	273	235
100	187	190	196	194	192	199	225	262	363	280	241
101	189	192	198	198	196	201	228	268	376	288	244
102	190	196	201	199	198	207	234	275	387	295	248
103	194	198	205	203	201	207	237	280	399	302	253
104	196	201	207	205	205	212	241	288	410	309	257
105	199	203	208	208	207	214	244	295	423	316	262
106	201	207	212	212	210	217	248	300	433	325	266
107	203	208	216	216	212	221	252	306	446	333	271
108	207	212	217	217	216	223	257	315	459	340	275
109	208	216	221	219	219	226	261	322	471	347	280
110	212	217	225	223	221	230	266	327	482	356	286
111	216	221	226	226	225	234	270	334	495	363	291
112	216	223	228	228	226	237	273	342	505	372	297
113	219	226	232	232	230	241	279	349	518	381	385
114	221	228	234	234	232	243	282	356	531	388	360
115	225	232	237	237	235	246	288	363	541	397	372
116	228	234	241	241	239	250	291	372	554	406	378
117	230	237	243	243	241	253	297	379	565	414	381
118	232	239	246	246	244	257	300	387	577	423	396
119	235	243	248	250	248	261	306	394	590	432	334
120	237	246	252	252	252	264	311	403	603	439	360
121	241	248	253	255	253	268	315	408	613	448	399
122	243	252	257	259	257	271	320	417	624	451	352
123	246	253	259	261	259	275	324	424	637	473	378
124	248	257	262	264	262	279	331	432	648	484	406
125	252	259	266	268	266	282	334	441	658	509	424
126	253	262	268	270	268	286	340	448	669	495	441
127	257	264	271	273	271	289	345	457	682	507	408
128	259	268	273	277	275	293	351	464	693	518	592
129	262	270	277	279	277	297	354	471	703	518	450
130	264	273	280	282	280	300	361	480	763	554	657
131	266	275	282	286	284	304	367	486	752	685	658
132	270	279	286	288	286	307	370	495	754	660	675
133	273	280	288	291	289	311	378	502	763	725	716
134	275	284	291	295	293	315	381	511	720	709	720
135	279	288	293	298	295	318	388	520	745	705	739
136	280	289	297	300	298	322	392	527	765	694	793
137	284	293	300	304	302	325	399	536	763	698	765

Time (min)	TC #119	TC #120	TC #121	TC #122	TC #123	TC #124	TC #125	TC #126	TC #127	TC #128	TC #129
138	288	297	302	307	306	329	405	543	763	736	792
139	289	298	306	311	309	334	410	550	774	621	828
140	293	302	309	315	311	338	415	559	781	829	829
141	297	304	313	316	315	342	421	568	801	840	846
142	298	307	315	320	316	345	428	576	790	842	840
143	302	311	318	324	320	349	433	585	804	829	876
144	306	313	322	325	324	352	439	594	811	882	882
145	307	316	324	329	327	358	444	603	835	896	864
146	311	318	327	333	331	361	451	612	837	838	858
147	315	322	329	336	334	365	457	619	860	810	880
148	316	325	333	338	338	370	462	628	865	838	878
149	320	327	336	342	340	374	469	637	864	865	869
150	324	331	340	345	343	378	475	646	883	842	878
151	327	333	342	349	349	381	482	655	885	858	894
152	329	336	345	352	351	385	489	664	898	862	910
153	333	340	349	356	354	390	495	673	910	864	903
154	336	342	352	360	358	394	502	682	919	864	923
155	338	345	354	363	361	399	507	691	937	905	916
156	342	349	358	367	365	403	514	700	957	896	943
157	345	352	361	370	369	406	522	711	864	894	970
158	349	354	365	376	374	412	527	721	941	910	968
159	352	358	370	379	378	415	534	730	995	871	986
160	354	361	372	383	381	421	541	739	1022	912	1004
161	358	365	378	387	385	424	547	750	993	750	1015
162	361	367	381	390	388	430	554	759	1024	878	1015
163	365	370	385	394	392	433	561	770	1002	921	1029
164	369	374	388	399	396	439	568	779	1009	874	1020
165	372	378	392	403	399	442	576	790	1009	882	1038
166	376	381	396	406	405	446	583	799	1013	892	1044
167	379	385	401	412	408	451	590	810	1017	901	1069
168	383	388	405	415	412	457	599	820	995	891	1076
169	387	392	408	421	415	460	606	860	988	892	1081
170	390	396	414	424	421	466	613	865	990	873	1085
171	394	399	417	428	424	469	622	878	990	907	1089
172	399	403	421	433	430	475	630	887	1013	918	918
173	403	406	426	439	433	480	637	871	997	849	793
174	406	412	430	442	437	484	644	883	1004	838	804
175	410	415	435	448	442	489	653	907	1031	828	768
176	415	419	439	453	448	495	660	847	1045	784	846
177	419	423	444	459	453	500	667	828	1063	838	934
178	423	426	448	464	459	507	673	923	1069	934	912
179	428	432	453	468	464	513	680	840	1078	880	792
180	432	437	459	473	471	518	687	869	1108	905	824
Max Temp:	432	437	459	473	471	518	687	923	1108	934	1089
Max Allowed:	398	398	398	398	398	398	398	398	398	398	398

Time (min)	TC #130	TC #131	TC #132	TC #133	TC #134	TC #135	TC #136	TC #137	TC #138	TC #139	TC #140
0	73	73	73	73	73	73	73	73	72	72	72
1	73	73	73	73	73	73	73	73	72	72	72
2	73	73	73	73	73	73	73	73	72	72	72
3	73	73	73	73	73	73	73	73	72	72	72
4	73	73	73	72	73	72	73	73	72	72	72
5	73	73	73	73	73	73	73	73	72	72	72
6	73	72	73	73	73	73	73	73	72	72	72
7	73	73	73	73	73	73	73	73	72	72	72
8	73	73	73	73	73	73	73	73	72	72	72
9	73	73	73	73	73	73	73	73	72	72	72
10	73	73	73	73	73	73	73	73	72	72	72
11	73	73	73	73	73	73	73	73	72	72	72
12	73	73	73	73	73	73	73	73	72	72	70
13	73	73	73	73	72	73	73	73	72	72	72
14	73	73	72	73	73	73	73	73	72	72	72
15	73	73	73	73	73	73	72	73	72	72	70
16	75	73	73	73	73	73	73	73	72	73	70
17	73	72	73	73	73	73	73	73	72	72	72
18	73	73	73	73	73	73	73	73	72	72	72
19	73	73	73	73	73	73	73	72	72	72	70
20	73	73	73	73	73	73	73	73	73	72	70
21	73	73	73	73	73	73	73	72	72	73	72
22	75	73	73	73	73	73	73	73	73	73	72
23	75	73	73	75	73	73	73	73	72	72	72
24	75	73	73	75	73	73	75	73	72	72	72
25	75	73	73	75	73	75	73	73	73	72	72
26	75	73	73	75	73	75	75	75	73	72	72
27	77	73	73	77	73	75	75	73	73	73	72
28	75	73	75	77	75	75	75	73	73	73	72
29	77	73	75	77	75	75	75	73	73	73	72
30	77	75	75	77	75	75	77	75	73	73	72
31	77	75	75	79	75	77	77	75	75	73	72
32	77	75	75	79	75	75	77	75	75	73	73
33	77	75	75	81	75	77	77	75	75	75	73
34	79	75	77	81	77	77	79	75	75	75	73
35	79	77	77	81	77	77	79	75	75	75	75
36	81	77	79	82	77	79	79	77	77	75	75
37	81	77	79	84	79	79	81	77	77	75	75
38	81	77	79	84	79	79	81	77	77	77	75
39	82	79	81	86	79	81	82	79	79	77	75
40	82	79	81	88	81	81	84	79	79	79	77
41	84	79	81	90	81	82	84	79	79	79	77
42	84	81	82	90	82	84	84	81	81	79	79
43	86	81	82	91	82	84	86	81	81	81	79
44	86	82	84	93	84	86	86	82	81	81	79
45	88	82	86	95	84	86	88	82	82	82	81

Time (min)	TC #130	TC #131	TC #132	TC #133	TC #134	TC #135	TC #136	TC #137	TC #138	TC #139	TC #140
46	90	84	86	95	86	88	90	82	82	82	81
47	90	86	88	97	86	90	90	84	84	84	82
48	91	86	88	99	88	90	91	86	86	84	82
49	93	88	90	100	90	91	93	86	86	86	84
50	95	90	93	102	90	93	95	88	88	88	84
51	97	90	93	104	93	93	97	88	90	88	86
52	99	91	93	108	93	95	99	88	91	90	86
53	100	93	97	109	95	97	100	91	91	91	90
54	100	93	97	111	95	99	100	93	93	93	90
55	104	95	100	113	99	100	104	93	95	95	91
56	104	97	102	115	100	102	104	95	97	97	93
57	108	99	104	118	100	102	106	97	99	99	95
58	109	100	104	118	104	104	108	99	100	100	95
59	111	102	108	122	106	108	111	100	102	102	97
60	113	104	109	124	108	108	113	102	104	104	99
61	115	106	111	126	108	111	115	104	106	106	100
62	118	108	113	129	109	111	117	106	108	108	100
63	120	109	115	131	113	115	118	108	111	109	104
64	122	111	117	133	115	117	120	109	113	111	104
65	124	115	118	136	117	118	122	111	115	113	108
66	126	115	122	138	118	120	124	113	117	115	109
67	129	118	124	142	122	122	126	115	118	118	109
68	131	120	126	144	124	126	127	118	122	120	113
69	135	122	129	145	126	126	131	118	124	122	115
70	136	124	131	149	127	129	133	122	126	126	117
71	138	127	133	151	129	131	135	124	127	127	118
72	142	129	136	154	133	133	138	126	131	129	120
73	144	133	138	156	133	136	140	127	133	131	122
74	147	133	140	160	136	138	142	131	135	133	124
75	149	136	144	162	138	140	144	133	138	136	126
76	153	140	145	165	142	142	147	136	140	140	127
77	154	142	147	167	144	145	149	138	142	142	129
78	158	144	151	169	145	147	153	140	145	144	133
79	160	147	153	172	149	149	154	142	147	145	135
80	163	149	154	176	151	153	158	145	151	149	136
81	165	151	158	178	154	154	158	147	154	151	140
82	169	154	160	180	156	158	162	151	156	154	140
83	172	158	163	183	158	160	165	153	158	156	142
84	174	160	165	185	162	163	167	154	162	160	145
85	176	162	169	187	165	165	169	156	163	162	147
86	180	165	171	190	167	169	172	160	167	165	149
87	180	169	174	192	169	171	174	163	171	167	153
88	183	171	176	196	172	172	178	165	172	171	154
89	187	172	180	198	174	176	180	167	176	172	156
90	190	174	181	201	178	178	183	171	178	174	158
91	192	178	183	205	180	181	185	172	181	178	162

Time (min)	TC #130	TC #131	TC #132	TC #133	TC #134	TC #135	TC #136	TC #137	TC #138	TC #139	TC #140
92	196	180	187	207	181	183	189	176	183	181	163
93	199	183	190	208	185	187	190	178	187	183	165
94	203	187	192	212	189	189	194	181	190	187	169
95	207	190	196	214	190	192	196	185	192	190	171
96	210	192	198	217	194	194	199	187	196	192	172
97	214	196	201	219	196	198	201	189	199	196	176
98	217	198	205	223	198	199	205	192	203	198	178
99	221	201	207	225	201	203	208	194	205	201	180
100	225	205	210	228	205	207	210	198	208	205	183
101	228	207	214	232	207	208	212	199	212	208	185
102	232	210	216	234	210	212	216	203	214	210	187
103	235	214	219	237	212	214	219	207	217	214	190
104	239	217	221	239	216	217	223	210	221	217	192
105	243	219	225	243	217	219	225	210	223	219	194
106	246	223	228	244	221	223	226	214	226	223	198
107	252	226	232	244	225	226	230	217	234	226	199
108	253	230	234	248	226	228	234	219	235	228	201
109	259	234	237	253	230	232	235	223	237	232	205
110	262	235	241	257	234	235	331	225	480	235	207
111	266	239	243	259	237	239	271	228	334	237	208
112	270	243	246	261	239	243	244	232	246	241	210
113	500	246	248	264	243	244	241	234	248	244	225
114	550	250	252	268	246	248	244	237	252	248	226
115	615	253	255	271	345	252	246	241	255	250	230
116	525	255	259	298	540	255	250	243	259	253	234
117	586	259	262	275	588	257	253	244	262	255	235
118	513	262	266	235	365	261	255	248	264	259	237
119	309	369	270	360	666	262	320	252	307	775	698
120	351	428	271	315	561	266	333	417	297	770	712
121	408	441	275	367	635	270	327	282	403	781	709
122	311	444	279	397	723	388	370	259	504	801	723
123	316	444	282	392	687	421	396	262	768	826	732
124	320	441	286	365	658	360	403	266	788	828	738
125	453	469	289	405	734	342	691	448	750	831	741
126	487	475	293	408	772	275	403	498	730	842	748
127	334	482	295	734	801	361	415	590	795	855	754
128	507	487	298	702	687	293	430	541	775	860	754
129	372	495	302	761	851	297	783	541	799	867	761
130	392	502	311	784	775	300	838	628	781	878	768
131	516	651	320	804	810	304	777	644	799	829	565
132	736	676	315	763	842	307	824	675	766	795	475
133	729	694	320	811	802	311	793	689	777	792	468
134	752	739	324	828	835	315	817	707	811	720	507
135	775	721	327	826	811	320	871	693	774	783	522
136	793	732	401	808	851	302	871	720	779	813	511
137	813	745	421	766	844	307	862	730	779	835	471

Time (min)	TC #130	TC #131	TC #132	TC #133	TC #134	TC #135	TC #136	TC #137	TC #138	TC #139	TC #140
138	824	747	403	804	858	406	883	754	802	837	516
139	837	756	423	829	837	554	878	775	804	833	311
140	849	766	441	876	829	567	896	790	811	786	513
141	855	763	356	880	853	577	876	799	819	824	520
142	864	772	495	815	880	586	910	808	838	829	507
143	869	781	572	853	887	595	941	817	837	838	792
144	874	792	790	862	928	658	1006	822	844	905	784
145	883	802	826	896	975	639	1008	831	840	918	806
146	880	815	797	851	973	660	1026	833	828	862	802
147	864	828	763	864	894	723	705	831	840	842	820
148	871	831	756	756	925	734	864	831	858	885	826
149	829	846	792	752	916	754	1011	849	819	896	759
150	761	867	808	759	914	750	1044	851	826	874	732
151	739	873	815	772	950	750	1045	860	835	880	734
152	759	869	824	792	952	772	1054	867	846	891	750
153	774	871	817	792	923	815	1060	869	853	891	754
154	784	880	811	797	900	860	1069	878	860	910	763
155	802	873	871	810	946	874	1074	883	824	921	772
156	801	885	808	826	912	856	1081	887	837	901	790
157	790	829	813	802	930	864	1083	903	851	885	792
158	786	880	865	813	901	849	1085	923	887	892	788
159	797	907	799	829	918	862	1099	928	835	901	781
160	806	927	801	840	928	921	1107	937	855	914	729
161	813	945	806	865	907	792	1103	948	900	925	727
162	828	936	822	885	819	799	1098	959	898	939	756
163	847	979	846	907	820	903	1103	970	901	937	819
164	864	914	849	891	858	784	1090	979	912	946	849
165	883	932	847	898	869	777	889	986	923	955	828
166	889	910	820	910	876	750	900	993	932	943	882
167	894	918	808	878	880	788	936	1000	945	952	856
168	903	919	792	840	883	802	937	964	979	959	847
169	916	932	878	847	894	900	982	977	972	1008	828
170	923	1009	851	851	896	856	930	979	977	973	898
171	934	939	820	864	900	862	914	984	1027	970	891
172	946	831	802	846	833	858	914	1004	988	972	820
173	957	820	865	912	793	910	932	1017	1047	982	901
174	970	900	883	853	813	936	939	1015	1049	986	961
175	984	937	840	918	847	973	943	1022	1069	995	891
176	1006	774	864	849	718	858	1015	1029	1060	1008	909
177	986	779	874	738	739	855	995	1035	1054	1022	847
178	999	786	891	786	727	896	991	1042	1053	1071	889
179	939	833	865	765	806	887	1035	1080	1069	1024	817
180	943	824	891	813	743	871	1137	988	1071	1017	871
Max Temp:	1006	1009	891	918	975	973	1137	1080	1071	1071	961
Max Allowed:	398	398	398	398	398	398	398	398	397	397	397

Time (min)	TC #141	TC #142	TC #143	TC #144	TC #145	TC #146	TC #147	TC #148	TC #149	TC #150
0	70	68	68	70	70	72	72	72	73	73
1	70	68	68	70	70	72	72	72	73	73
2	70	68	68	70	70	72	72	72	73	73
3	70	68	68	70	70	72	72	73	73	73
4	68	68	68	68	70	72	72	73	73	73
5	70	68	68	70	70	72	72	73	73	73
6	70	68	68	70	72	72	72	73	72	73
7	70	68	68	70	72	72	72	73	73	73
8	70	68	68	70	70	72	72	73	73	73
9	70	66	68	70	72	72	72	73	73	73
10	70	68	68	70	72	72	72	73	73	73
11	70	68	68	70	70	72	72	73	73	73
12	70	68	68	68	72	72	72	72	73	73
13	68	68	68	68	70	72	72	72	73	73
14	68	66	68	70	70	72	72	72	73	73
15	68	66	68	70	70	72	72	73	73	73
16	68	68	66	70	70	72	72	73	73	73
17	70	68	68	70	72	72	73	72	73	73
18	70	66	68	70	72	72	72	73	73	73
19	68	68	68	70	72	72	72	73	73	73
20	70	68	68	70	72	72	72	72	73	73
21	70	68	68	68	70	72	72	73	73	73
22	70	66	68	70	72	72	72	72	73	73
23	70	66	68	70	72	72	73	72	73	73
24	70	68	68	70	70	72	72	73	73	73
25	70	66	68	70	72	72	72	72	73	73
26	70	68	68	70	72	72	72	73	72	73
27	70	66	68	70	70	72	72	73	73	73
28	70	66	68	70	72	72	72	73	73	73
29	70	66	68	70	72	72	72	72	73	73
30	70	68	68	70	72	72	73	73	73	73
31	70	66	68	70	72	72	73	73	73	73
32	70	68	68	70	72	72	72	73	73	73
33	72	68	68	70	72	72	73	73	73	73
34	72	68	68	70	72	72	73	73	73	73
35	72	68	68	70	72	72	73	75	73	75
36	72	68	68	70	72	72	73	75	75	75
37	73	66	68	70	72	73	73	73	75	75
38	72	68	68	70	72	73	73	75	75	75
39	72	68	68	70	72	73	73	75	75	75
40	72	68	68	70	72	73	75	75	75	75
41	72	68	68	70	73	73	75	75	75	77
42	72	68	68	70	73	73	75	75	77	77
43	73	68	68	70	73	75	75	77	77	77
44	75	68	68	70	73	75	75	77	77	77
45	75	68	68	72	73	75	75	77	77	79

Time (min)	TC #141	TC #142	TC #143	TC #144	TC #145	TC #146	TC #147	TC #148	TC #149	TC #150
46	75	68	68	72	75	75	77	77	79	79
47	75	68	68	72	75	75	77	79	79	79
48	75	68	68	72	75	77	79	79	79	79
49	77	68	68	72	75	77	79	79	81	81
50	77	68	68	72	75	77	81	79	81	81
51	77	68	70	73	77	79	81	81	82	82
52	79	70	70	73	77	79	81	81	82	82
53	79	68	68	73	77	79	82	81	82	84
54	81	70	70	73	79	81	82	84	84	84
55	81	70	70	73	79	81	84	84	84	86
56	81	70	70	75	81	82	84	84	86	86
57	82	70	70	75	81	82	86	84	86	88
58	82	70	70	75	81	84	86	86	88	88
59	84	70	70	75	82	86	86	88	88	90
60	86	70	72	77	82	86	88	88	90	91
61	86	70	72	77	84	86	90	90	91	91
62	86	70	72	77	84	88	90	90	91	93
63	88	72	72	77	84	88	93	91	93	95
64	90	72	72	79	86	90	93	93	95	95
65	90	72	72	79	88	91	93	95	95	97
66	91	72	72	79	88	91	95	95	97	99
67	93	72	73	81	90	93	97	97	99	100
68	93	73	73	81	90	95	99	99	100	102
69	95	73	73	82	91	97	100	100	100	104
70	97	73	73	82	91	99	102	100	104	106
71	97	73	73	84	93	99	104	104	106	108
72	99	73	75	84	95	100	106	106	108	109
73	100	75	75	84	95	102	106	106	109	111
74	100	75	75	86	99	104	108	108	111	113
75	102	75	75	86	99	106	109	111	113	115
76	104	77	77	88	100	108	111	113	115	117
77	104	77	77	88	102	109	113	115	117	118
78	108	77	77	90	102	111	115	117	118	120
79	108	77	79	90	104	111	118	118	120	124
80	111	79	79	91	106	115	120	120	122	126
81	111	79	79	93	108	115	122	122	126	127
82	113	79	81	93	108	118	124	124	127	129
83	115	81	81	93	111	118	126	126	129	133
84	117	81	81	95	111	122	127	129	131	133
85	118	81	81	95	113	122	131	131	135	136
86	118	82	82	97	115	124	133	133	136	138
87	120	82	82	99	117	127	133	135	138	142
88	124	84	84	99	118	129	136	136	140	144
89	124	84	84	100	120	131	138	140	144	147
90	126	84	86	102	122	133	140	142	145	149
91	127	86	86	104	122	135	144	144	149	151

Time (min)	TC #141	TC #142	TC #143	TC #144	TC #145	TC #146	TC #147	TC #148	TC #149	TC #150
92	129	86	86	104	124	138	145	147	151	154
93	131	88	88	104	126	140	147	151	153	156
94	133	88	88	106	127	140	151	151	156	158
95	135	88	88	108	129	144	153	154	160	162
96	136	90	90	108	131	145	154	156	162	165
97	138	90	90	109	133	147	156	158	163	167
98	140	91	91	111	135	149	158	162	167	171
99	142	91	91	113	136	153	162	165	169	172
100	144	93	93	113	138	153	163	167	171	176
101	145	93	93	115	140	154	167	169	174	178
102	147	95	93	117	142	158	169	172	176	181
103	147	95	95	118	144	162	171	174	180	183
104	149	97	95	118	145	162	174	178	183	187
105	151	97	95	120	147	165	176	180	185	190
106	153	99	97	122	149	167	178	183	189	192
107	154	99	99	122	153	171	181	185	190	196
108	156	100	99	124	154	172	183	189	194	198
109	158	100	100	126	154	174	187	190	198	201
110	160	100	100	126	158	176	189	194	199	205
111	162	102	102	127	160	180	190	196	203	208
112	163	104	102	129	162	181	194	199	205	210
113	165	104	104	131	163	183	196	201	208	214
114	167	104	104	133	165	185	199	205	210	216
115	167	489	106	133	167	189	201	208	214	219
116	169	673	106	135	169	190	205	210	216	223
117	651	743	108	136	171	192	207	214	219	226
118	689	612	108	138	172	196	210	216	223	228
119	705	734	109	138	174	198	212	219	225	232
120	628	689	111	140	176	199	214	221	228	235
121	277	804	111	142	178	203	217	225	232	237
122	703	819	111	144	181	205	219	226	234	241
123	585	840	113	145	183	208	223	230	237	244
124	419	837	115	145	185	210	225	234	239	248
125	685	831	115	147	187	212	228	235	243	252
126	451	828	117	149	189	214	230	239	246	253
127	709	860	117	151	190	217	234	241	248	257
128	604	887	117	153	194	219	235	244	252	261
129	766	887	118	154	194	223	239	248	255	264
130	424	874	120	156	198	225	241	250	257	266
131	435	842	120	156	198	226	244	253	259	270
132	433	837	122	158	201	230	246	255	262	273
133	450	844	124	160	203	232	250	259	266	277
134	426	885	124	162	205	235	252	262	270	280
135	432	898	126	163	207	237	255	264	271	284
136	489	889	126	163	210	241	259	268	275	288
137	486	885	127	165	212	244	261	270	279	291

Time (min)	TC #141	TC #142	TC #143	TC #144	TC #145	TC #146	TC #147	TC #148	TC #149	TC #150
138	491	889	129	167	214	246	264	273	280	293
139	500	876	129	169	216	248	266	277	284	297
140	509	894	129	171	217	252	270	280	288	300
141	516	928	131	172	219	253	273	282	291	304
142	523	889	133	172	223	257	275	286	293	307
143	527	919	133	174	225	261	279	289	297	309
144	610	993	135	176	226	262	280	291	300	313
145	536	1018	135	178	228	266	284	295	302	316
146	684	1042	136	180	232	270	288	298	306	320
147	687	1058	136	181	234	271	289	302	309	324
148	711	1071	138	183	235	275	293	304	313	327
149	720	1074	140	185	237	277	297	307	316	331
150	711	1078	142	185	241	280	300	311	318	334
151	725	1080	142	187	243	284	302	315	322	338
152	741	1081	144	189	244	286	306	316	325	342
153	788	1083	144	190	246	289	309	320	329	345
154	837	1089	145	192	248	291	311	324	333	349
155	838	1092	145	194	252	295	315	327	334	351
156	840	1098	147	196	252	298	318	331	338	356
157	842	1103	147	198	255	300	320	333	342	360
158	810	1105	149	198	257	304	324	336	345	363
159	856	1089	151	199	259	307	327	340	349	365
160	898	1062	151	201	262	309	331	343	352	370
161	865	1060	153	203	264	313	334	345	356	372
162	896	1060	153	205	266	316	338	349	360	376
163	883	1062	154	207	270	320	342	352	363	381
164	912	1069	156	208	271	322	343	356	367	385
165	936	1080	156	210	273	325	347	360	370	388
166	961	934	158	212	277	329	351	363	374	392
167	993	946	160	214	279	333	354	367	378	396
168	997	910	160	216	282	334	358	370	381	399
169	979	936	162	217	284	340	361	374	385	405
170	995	828	162	219	288	343	365	378	390	408
171	981	788	163	221	289	347	370	381	394	414
172	1020	752	165	223	293	351	374	385	397	417
173	1083	862	165	225	295	354	378	390	403	421
174	1051	878	167	226	298	358	381	394	406	426
175	1065	826	169	228	302	361	385	397	410	430
176	972	851	171	230	306	365	390	401	415	435
177	957	815	171	234	307	370	394	406	419	441
178	1036	961	172	234	311	372	397	410	424	450
179	964	810	172	237	313	376	403	415	430	457
180	1036	860	174	239	316	379	406	421	435	464
Max Temp:	1083	1105	174	239	316	379	406	421	435	464
Max Allowed:	395	393	393	395	395	397	397	397	398	398

Time (min)	TC #151	TC #152	TC #153	TC #154	TC #155	TC #156	TC #157	TC #158	TC #159	TC #160	TC #161
0	73	73	73	73	73	73	73	73	73	73	73
1	73	73	73	73	73	73	73	73	73	73	73
2	73	73	73	73	73	73	73	73	73	73	73
3	73	73	73	73	73	73	73	73	73	73	73
4	73	73	73	73	73	73	73	73	73	73	73
5	73	73	73	73	73	73	73	73	73	73	73
6	73	73	73	73	73	73	73	73	73	75	72
7	73	73	73	73	73	73	73	73	73	73	73
8	73	73	73	73	73	73	73	73	73	73	73
9	73	73	73	73	73	73	73	73	73	73	73
10	73	73	73	73	73	73	73	73	73	73	73
11	73	73	73	73	73	73	73	73	73	73	73
12	73	73	73	73	73	73	73	73	73	73	73
13	73	73	73	73	73	73	73	73	73	73	73
14	73	73	75	73	73	73	73	73	73	73	73
15	73	73	73	73	73	73	73	73	73	73	73
16	73	73	73	73	73	73	73	73	73	73	73
17	73	73	73	73	73	73	73	73	73	73	72
18	73	73	73	75	73	73	73	73	73	73	73
19	73	73	75	73	73	73	73	73	73	73	73
20	73	73	73	73	73	73	73	73	73	73	73
21	73	73	73	73	73	73	73	75	73	73	73
22	73	73	75	75	73	75	73	73	75	73	73
23	73	73	73	75	73	73	73	75	73	73	73
24	73	73	73	73	75	73	75	73	73	73	73
25	73	73	73	73	73	73	73	73	73	73	73
26	75	73	75	75	75	75	75	73	75	73	73
27	73	73	73	75	77	75	75	75	73	75	73
28	75	73	75	73	75	75	75	75	75	73	73
29	73	75	75	75	75	75	75	75	75	75	73
30	75	73	75	75	75	75	75	75	75	75	73
31	75	77	75	75	75	75	75	75	75	75	73
32	75	75	75	77	77	75	77	75	75	75	75
33	75	75	75	77	77	77	77	77	75	75	75
34	75	75	77	77	77	77	77	77	75	75	75
35	75	75	77	77	77	77	77	77	77	75	75
36	75	77	77	77	79	79	79	77	77	77	75
37	75	77	77	77	79	79	79	77	77	75	75
38	75	77	79	79	79	79	81	79	77	77	77
39	77	77	79	79	81	81	81	79	79	77	77
40	77	77	79	81	81	81	81	79	79	79	77
41	77	79	79	81	82	82	82	81	79	79	77
42	77	79	81	82	82	82	82	81	81	79	79
43	79	79	81	82	84	84	82	82	81	81	79
44	79	81	82	82	84	84	84	82	81	81	81
45	79	81	82	84	86	86	86	84	82	81	81

Time (min)	TC #151	TC #152	TC #153	TC #154	TC #155	TC #156	TC #157	TC #158	TC #159	TC #160	TC #161
46	79	82	82	84	86	86	86	84	84	82	81
47	81	82	84	86	88	88	88	86	84	82	82
48	81	82	86	88	90	88	90	86	86	84	82
49	82	84	86	88	91	90	90	88	86	84	84
50	82	84	88	90	91	91	91	90	88	86	86
51	84	86	90	91	93	93	93	91	90	88	86
52	84	88	90	93	95	95	95	91	90	88	88
53	86	88	91	95	97	97	97	93	91	90	88
54	86	90	93	97	99	97	97	95	93	90	90
55	88	91	93	97	100	100	99	97	93	91	91
56	90	91	95	100	102	102	100	99	95	93	93
57	90	93	97	100	106	102	102	100	97	95	95
58	90	95	99	102	106	104	104	102	99	97	95
59	91	97	100	104	109	108	106	104	100	99	97
60	93	97	102	108	111	109	109	106	102	100	99
61	95	99	104	109	113	111	111	108	104	100	100
62	97	100	106	111	115	115	113	109	106	104	102
63	97	102	108	113	118	117	115	111	108	104	104
64	99	104	109	115	120	118	117	113	109	108	106
65	100	106	113	118	122	120	118	117	111	108	108
66	102	108	113	120	126	122	122	118	113	111	109
67	104	109	117	122	127	126	124	120	117	113	111
68	106	111	118	126	129	129	127	122	118	115	113
69	108	113	120	127	133	131	129	126	118	117	117
70	109	115	122	129	135	133	131	127	122	120	117
71	111	118	126	133	138	136	133	129	126	120	120
72	113	120	127	136	142	138	136	133	127	124	122
73	115	122	131	138	144	142	140	135	129	126	124
74	117	124	133	140	147	145	142	138	131	129	126
75	118	126	136	144	151	147	144	140	135	131	129
76	122	129	138	147	153	151	147	142	136	133	131
77	124	131	140	149	156	153	151	145	138	135	133
78	126	133	144	153	160	156	153	147	142	136	136
79	127	136	145	156	163	158	156	149	144	140	138
80	129	138	149	158	165	162	158	153	147	142	142
81	133	140	151	162	169	165	162	156	149	145	144
82	135	144	154	165	172	169	163	158	153	147	145
83	136	145	156	169	176	171	167	160	154	149	149
84	140	147	160	172	180	174	171	163	158	153	151
85	142	151	163	176	183	178	172	167	160	154	153
86	145	154	165	180	189	181	176	169	163	158	156
87	147	156	169	183	192	185	180	172	165	160	158
88	149	158	172	187	198	190	183	174	169	163	162
89	153	162	176	190	203	194	185	176	171	165	163
90	154	165	178	196	208	198	189	180	172	169	167
91	156	167	181	201	212	201	192	183	174	171	169

Time (min)	TC #151	TC #152	TC #153	TC #154	TC #155	TC #156	TC #157	TC #158	TC #159	TC #160	TC #161
92	160	169	185	205	219	207	196	185	178	172	172
93	162	172	189	210	225	212	199	189	180	176	174
94	165	176	192	214	232	217	203	192	183	178	178
95	169	180	198	219	239	223	207	196	187	181	180
96	171	183	201	226	244	228	212	199	190	185	183
97	172	185	205	232	252	234	216	203	192	187	185
98	176	187	208	237	259	241	219	207	196	190	189
99	178	190	212	244	268	248	225	210	199	194	190
100	181	196	217	252	275	253	230	214	203	198	194
101	185	198	221	257	284	259	234	217	205	199	196
102	187	201	226	266	291	268	239	223	208	201	199
103	190	205	230	271	300	273	244	225	212	207	201
104	194	208	235	280	309	280	248	228	216	208	205
105	196	212	239	288	318	288	253	234	219	212	208
106	199	216	244	295	327	297	259	237	221	216	212
107	203	219	250	302	336	302	264	241	225	217	214
108	207	223	255	309	347	311	270	244	228	221	217
109	208	226	261	318	356	320	275	248	232	225	221
110	212	230	266	325	365	327	280	253	235	228	223
111	216	234	271	333	374	334	286	257	239	230	226
112	219	237	275	342	385	342	291	261	243	234	230
113	221	243	280	349	394	351	297	266	246	237	232
114	225	246	286	358	405	360	302	270	250	241	235
115	228	250	293	367	414	367	307	273	253	244	239
116	232	253	298	374	424	376	313	279	255	248	243
117	234	259	304	383	435	383	318	282	259	250	244
118	239	262	309	392	446	392	325	288	262	253	248
119	241	266	315	399	457	401	331	291	266	257	252
120	244	270	322	408	468	410	336	297	270	261	253
121	248	275	327	417	477	417	343	300	273	264	257
122	252	279	333	426	489	426	349	304	277	268	261
123	255	284	340	435	500	437	356	309	280	271	262
124	259	288	345	444	513	446	361	315	284	275	266
125	262	291	352	455	523	455	367	318	288	277	270
126	266	297	358	464	534	464	374	606	291	280	273
127	268	300	365	473	545	473	381	365	295	284	277
128	273	306	370	482	554	482	388	583	298	442	280
129	275	309	378	491	565	491	394	336	302	522	282
130	280	315	385	500	576	500	399	342	307	525	286
131	282	318	390	509	588	507	406	351	311	298	289
132	286	322	397	520	599	516	414	352	315	304	293
133	289	327	403	529	610	525	419	360	318	361	297
134	293	331	410	538	622	534	424	361	565	354	300
135	297	336	417	547	631	543	459	367	574	315	304
136	300	340	424	558	642	604	475	520	700	493	309
137	304	345	432	565	653	671	468	496	644	329	313

Time (min)	TC #151	TC #152	TC #153	TC #154	TC #155	TC #156	TC #157	TC #158	TC #159	TC #160	TC #161
138	307	351	437	576	666	703	500	628	657	576	316
139	311	354	444	585	676	763	459	495	667	342	322
140	315	360	451	595	687	741	466	498	676	428	639
141	318	363	459	604	700	738	471	493	680	361	577
142	322	369	464	615	712	813	478	405	696	361	664
143	325	374	471	626	727	793	486	505	784	363	669
144	331	378	478	635	738	784	509	581	808	385	601
145	334	383	486	646	748	765	529	558	802	406	642
146	338	388	493	657	765	793	567	585	844	453	352
147	342	392	500	666	777	801	534	486	752	514	358
148	345	397	507	675	784	763	550	532	752	446	388
149	349	403	516	689	806	772	547	612	716	682	536
150	354	408	523	698	822	774	583	572	730	714	570
151	358	414	531	716	837	774	545	550	703	792	513
152	361	417	540	725	849	727	568	738	721	847	518
153	365	423	547	734	865	824	585	696	784	901	725
154	370	428	554	743	847	829	619	765	799	880	486
155	374	433	561	756	808	815	640	766	736	783	646
156	378	439	568	734	837	806	630	766	732	786	687
157	381	442	574	763	842	781	675	720	745	815	655
158	385	448	581	781	844	747	720	720	781	853	514
159	390	453	586	795	873	757	739	748	802	810	586
160	394	457	595	793	874	750	761	743	815	795	671
161	397	462	603	808	889	837	761	801	864	811	651
162	401	468	612	808	894	788	784	732	887	815	709
163	406	473	622	817	907	948	802	770	948	790	718
164	410	478	631	835	928	995	817	788	966	824	723
165	414	486	640	804	828	993	829	849	946	885	729
166	417	491	648	790	838	999	846	817	891	981	738
167	423	496	657	752	831	1040	860	824	831	1004	844
168	426	502	664	754	833	1053	871	957	1029	1033	896
169	430	507	673	748	844	952	878	993	1044	918	894
170	435	513	680	777	936	928	894	1004	1063	936	869
171	439	518	687	790	916	997	907	968	990	970	910
172	444	523	694	792	928	1004	916	955	984	1031	903
173	448	529	703	792	898	928	925	948	826	1051	941
174	453	536	712	849	853	833	946	963	819	1085	943
175	457	541	723	799	871	730	968	1027	822	1065	964
176	462	549	725	835	865	718	954	986	804	1044	959
177	471	552	714	846	883	716	963	844	793	1062	954
178	478	554	711	846	984	725	961	790	786	1099	999
179	484	558	714	847	916	757	995	873	766	1108	1000
180	491	561	720	824	1040	793	986	869	774	1119	997
Max Temp:	564	634	793	897	1113	866	1059	942	847	1192	1070
Max Allowed:	398	398	398	398	398	398	398	398	398	398	398

Time (min)	TC #162	TC #163	TC #164	TC #165	TC #166	TC #167	TC #168	TC #169	TC #170	TC #171	TC #172
0	72	72	72	70	70	68	68	70	70	70	72
1	72	72	72	72	70	68	68	70	70	70	72
2	72	72	72	70	70	68	68	70	70	70	72
3	73	72	72	72	70	68	68	70	70	70	72
4	73	72	72	70	70	68	68	70	70	70	72
5	73	72	72	70	70	68	68	70	70	72	72
6	72	72	72	70	70	68	68	68	72	70	70
7	72	72	72	70	70	68	68	70	70	70	70
8	73	72	72	70	70	68	68	70	70	70	72
9	72	72	72	70	70	68	68	70	70	70	70
10	72	72	72	70	68	68	68	70	70	70	72
11	72	72	72	70	68	68	68	70	72	70	70
12	72	72	72	70	70	68	68	70	70	70	70
13	72	72	72	70	68	68	68	70	70	70	72
14	73	72	72	70	70	68	68	70	70	70	70
15	72	72	72	70	68	68	68	68	70	70	70
16	73	72	72	70	68	68	68	70	70	70	70
17	73	72	72	70	70	68	68	70	70	70	72
18	73	72	72	70	68	68	68	70	72	70	70
19	72	72	72	72	68	68	68	70	70	70	72
20	72	72	72	70	70	68	68	70	70	72	72
21	73	72	72	70	70	66	68	70	70	70	72
22	73	72	72	70	70	68	68	70	70	70	70
23	72	73	72	70	68	68	68	70	72	72	70
24	73	72	72	72	70	68	68	70	72	70	72
25	73	72	72	72	68	68	68	70	70	72	70
26	73	73	72	72	70	68	68	70	72	72	72
27	72	73	72	72	70	68	68	70	72	70	72
28	73	73	72	72	70	68	68	70	72	72	72
29	73	73	72	72	70	68	68	70	72	72	72
30	73	73	73	72	70	68	68	70	72	72	72
31	73	73	73	72	70	68	68	70	72	72	72
32	73	73	73	72	70	68	68	70	72	72	72
33	73	73	73	72	70	68	68	70	72	72	73
34	75	73	73	72	70	68	68	70	72	72	73
35	75	75	72	72	70	68	68	70	72	73	73
36	75	75	73	72	70	68	68	72	72	73	73
37	75	75	75	73	70	68	68	70	72	73	73
38	75	75	75	73	72	68	68	72	73	73	75
39	77	77	75	73	72	68	68	72	73	73	75
40	77	79	75	73	72	68	68	72	73	73	75
41	77	77	75	73	72	68	68	72	73	73	75
42	79	79	77	75	72	68	68	72	73	75	77
43	79	79	77	75	72	68	68	72	75	75	77
44	79	79	77	75	72	70	68	72	73	77	77
45	81	81	79	75	72	70	68	72	75	77	77

Time (min)	TC #162	TC #163	TC #164	TC #165	TC #166	TC #167	TC #168	TC #169	TC #170	TC #171	TC #172
46	81	81	79	77	72	70	68	73	75	77	79
47	82	82	79	77	73	70	68	73	77	79	79
48	82	82	81	79	73	70	68	72	77	79	79
49	84	84	82	79	73	70	68	73	77	79	81
50	84	86	82	79	75	72	68	73	77	81	81
51	86	86	84	81	75	72	68	73	79	81	82
52	86	88	84	81	75	70	70	73	79	81	82
53	88	88	86	82	75	72	68	75	79	82	82
54	88	90	86	82	77	72	68	75	81	82	84
55	90	91	88	82	77	72	68	75	81	84	86
56	91	93	90	84	77	72	68	75	82	84	86
57	93	95	91	86	79	72	70	77	82	86	88
58	95	97	93	86	79	73	70	77	84	86	88
59	97	97	93	88	81	73	70	77	84	88	90
60	99	100	95	88	81	73	70	77	84	90	90
61	100	100	97	90	82	73	70	79	86	90	91
62	100	102	99	91	82	75	70	79	86	91	91
63	104	104	100	93	82	75	70	79	88	93	95
64	104	108	102	95	84	75	72	81	88	93	95
65	106	108	104	95	84	75	72	81	90	95	97
66	109	111	104	97	86	77	72	81	90	97	97
67	111	113	108	99	88	77	72	82	91	97	99
68	113	115	109	100	88	79	72	82	93	99	100
69	115	117	111	100	90	79	72	84	93	100	102
70	117	120	113	102	90	79	72	84	95	100	104
71	118	122	115	104	91	79	72	84	97	102	104
72	122	124	117	106	93	81	72	86	97	104	106
73	124	126	118	108	93	81	72	86	99	106	108
74	126	129	122	109	95	82	72	86	99	108	109
75	127	131	122	111	95	82	73	88	100	108	111
76	131	133	126	113	97	82	73	90	100	109	111
77	133	135	127	115	99	84	73	90	102	111	113
78	135	138	129	117	99	84	73	90	104	113	115
79	138	140	131	118	100	84	73	91	104	115	117
80	140	144	135	120	102	86	75	91	106	117	118
81	144	145	136	122	102	86	75	93	108	117	118
82	145	149	138	124	104	88	75	93	108	118	120
83	147	151	140	126	106	88	75	95	109	120	122
84	151	154	144	127	108	88	75	95	111	122	124
85	153	156	147	129	109	90	77	97	111	124	126
86	154	160	149	133	109	90	77	97	113	124	127
87	158	162	151	135	111	91	77	99	115	126	129
88	160	163	153	136	113	91	77	99	115	127	131
89	163	167	156	136	113	93	77	100	117	129	133
90	165	171	158	140	115	93	79	100	118	131	135
91	167	172	162	142	117	93	79	100	120	133	136

Time (min)	TC #162	TC #163	TC #164	TC #165	TC #166	TC #167	TC #168	TC #169	TC #170	TC #171	TC #172
92	171	176	163	144	118	95	79	104	120	135	136
93	174	180	165	145	120	97	79	104	122	135	140
94	176	181	169	147	122	97	81	104	124	136	140
95	180	185	171	149	122	99	81	106	124	138	142
96	183	187	174	153	126	99	81	108	126	140	144
97	185	190	176	154	126	100	81	108	127	142	145
98	189	194	180	156	127	100	82	108	129	144	147
99	190	196	181	158	129	102	82	109	129	145	149
100	194	199	185	162	131	102	82	111	131	147	151
101	198	203	187	163	133	104	82	111	133	149	153
102	199	205	190	165	133	104	84	113	133	151	154
103	203	208	192	167	135	106	84	113	135	153	156
104	205	212	196	169	136	108	84	115	136	153	158
105	208	214	198	172	138	108	84	115	138	154	160
106	212	217	201	174	140	109	86	117	138	156	162
107	216	221	203	176	142	111	86	118	140	158	163
108	217	225	207	178	144	111	86	118	142	160	165
109	221	226	208	180	145	111	88	120	144	162	167
110	223	230	212	183	147	113	88	120	145	163	169
111	226	234	216	185	147	115	88	122	147	165	171
112	230	235	217	187	149	115	90	122	147	167	172
113	232	239	219	189	151	117	90	124	149	169	174
114	235	243	223	190	153	117	90	126	149	171	176
115	239	246	226	194	154	118	90	126	151	171	178
116	243	248	230	196	156	120	91	127	153	174	180
117	244	252	230	198	158	120	91	127	154	176	181
118	248	253	234	199	160	122	93	129	154	178	183
119	252	257	237	203	162	122	93	129	158	180	185
120	253	261	241	205	163	124	93	131	158	180	187
121	257	264	243	208	163	124	93	133	160	183	189
122	261	266	244	210	167	126	95	133	162	183	190
123	262	270	248	212	169	127	95	135	163	187	192
124	266	273	252	216	171	127	97	136	165	189	194
125	270	277	255	219	172	129	97	136	165	190	196
126	273	280	257	223	176	131	97	138	167	192	198
127	275	284	262	225	176	133	99	140	169	194	199
128	279	288	266	230	181	133	99	140	171	196	201
129	282	291	270	234	183	135	99	142	172	198	203
130	286	295	273	237	185	136	100	144	174	199	205
131	289	298	279	241	187	138	100	144	176	201	207
132	293	304	282	232	203	138	100	145	178	203	208
133	297	307	288	234	205	140	102	147	180	205	210
134	300	313	406	250	268	142	102	149	181	208	212
135	306	318	527	459	597	144	104	149	183	210	216
136	307	324	574	527	379	145	104	151	185	212	216
137	313	327	534	442	606	145	104	153	187	214	217

Time (min)	TC #162	TC #163	TC #164	TC #165	TC #166	TC #167	TC #168	TC #169	TC #170	TC #171	TC #172
138	316	333	550	477	435	660	106	154	189	217	219
139	320	340	556	388	435	604	106	154	190	219	223
140	325	345	464	464	448	151	108	156	192	221	225
141	331	352	671	279	347	153	108	158	194	225	226
142	334	358	711	284	363	624	108	160	196	226	228
143	340	365	721	275	392	610	109	160	198	228	230
144	430	392	741	397	586	657	109	162	199	230	232
145	430	550	752	291	383	671	111	163	201	232	234
146	426	601	817	464	637	685	111	165	203	235	235
147	696	538	828	345	435	694	111	165	205	237	237
148	833	752	770	336	419	707	113	167	207	239	241
149	507	793	792	495	612	687	113	169	208	241	243
150	572	799	793	419	426	736	115	169	208	244	244
151	657	759	797	403	489	491	115	171	212	246	246
152	820	675	820	604	475	651	117	172	212	248	248
153	883	619	855	441	455	669	117	172	216	252	252
154	788	828	853	451	433	504	118	174	217	253	253
155	923	853	873	639	662	511	118	176	219	255	255
156	900	784	858	496	516	721	118	178	223	259	257
157	896	754	837	496	642	693	120	180	225	261	259
158	885	741	871	489	747	700	122	181	226	262	262
159	860	802	846	693	822	709	122	183	230	266	264
160	934	817	862	635	804	871	122	183	234	268	266
161	943	786	889	811	880	954	124	185	235	271	270
162	936	820	876	851	957	864	124	187	237	275	271
163	948	817	894	849	871	799	126	189	241	277	273
164	984	804	941	867	891	851	126	190	244	280	277
165	1009	804	984	810	928	846	127	192	246	284	279
166	973	838	941	802	986	849	127	194	250	288	280
167	981	847	939	838	988	921	129	196	252	289	284
168	930	828	959	901	1015	923	129	198	255	293	286
169	990	873	936	903	957	871	131	199	257	297	289
170	999	873	950	860	959	876	131	201	261	300	291
171	1009	891	916	842	1008	892	133	203	264	304	295
172	972	936	878	907	1067	907	133	205	266	307	297
173	792	1040	921	864	986	923	135	207	270	311	300
174	802	964	876	851	1090	900	135	208	273	316	302
175	804	957	885	835	1029	914	136	210	277	320	306
176	799	979	862	873	1112	936	138	212	279	324	309
177	862	986	844	838	1056	1000	138	214	282	327	311
178	847	986	838	874	1112	950	140	216	286	331	315
179	820	968	880	954	1105	986	140	217	288	334	318
180	835	990	849	869	988	963	142	219	291	338	322
Max Temp:	907	1062	921	939	1058	1031	210	289	361	408	394
Max Allowed:	397	397	397	395	395	393	393	395	395	395	397

Time (min)	TC #173	TC #174	TC #175	TC #176	TC #177	TC #178	TC #179	TC #180	TC #181	TC #182	TC #183
0	72	72	72	72	72	72	72	72	72	72	72
1	72	72	72	72	72	72	72	72	72	72	72
2	72	72	72	72	72	72	73	73	72	72	72
3	72	72	72	72	72	72	72	72	72	72	72
4	72	72	72	72	72	72	72	73	72	72	72
5	72	72	72	72	72	72	73	72	72	72	72
6	72	72	72	72	72	72	72	73	72	72	72
7	72	72	72	72	72	72	72	72	73	72	72
8	72	72	72	72	72	73	72	72	72	72	72
9	72	72	72	72	73	72	72	72	72	72	72
10	72	72	72	72	72	72	72	72	72	72	72
11	72	72	72	72	72	72	72	72	72	72	72
12	72	72	72	72	73	72	72	72	72	72	72
13	72	72	72	72	72	72	73	73	72	72	72
14	72	72	72	72	73	72	72	72	73	72	72
15	72	72	72	72	72	72	73	72	72	72	72
16	70	72	72	72	72	73	73	72	72	72	72
17	72	72	72	72	72	72	72	73	73	72	72
18	72	72	72	72	72	73	72	73	72	73	72
19	72	72	72	72	72	73	73	72	72	72	73
20	72	72	72	72	72	72	73	73	73	72	72
21	72	72	72	72	72	73	73	73	72	72	72
22	72	73	72	72	72	72	73	73	73	73	73
23	72	72	73	72	73	73	73	73	73	73	73
24	72	72	72	72	73	73	73	73	73	73	72
25	72	72	72	72	73	73	73	73	73	73	73
26	73	73	73	72	73	73	73	73	73	73	73
27	72	72	72	73	73	73	75	73	73	73	73
28	72	73	72	72	72	75	75	73	75	73	73
29	73	73	73	73	73	73	75	75	75	73	73
30	73	73	73	73	75	75	75	75	75	73	73
31	73	73	73	73	73	75	75	75	75	75	73
32	73	73	73	73	73	75	75	77	75	75	75
33	73	73	73	73	73	75	77	77	75	75	75
34	73	75	73	73	75	77	77	77	77	75	75
35	73	75	75	73	75	77	77	77	77	77	75
36	73	75	75	75	75	77	79	79	77	77	75
37	75	75	75	75	77	77	79	79	79	77	77
38	75	77	75	75	77	79	79	81	79	79	77
39	75	77	75	75	77	79	81	81	79	79	77
40	77	77	75	77	77	81	81	82	81	79	77
41	77	77	77	75	77	81	82	82	81	79	79
42	77	79	77	77	79	81	82	84	81	81	79
43	79	79	79	77	79	82	82	84	82	81	81
44	79	79	79	77	79	84	84	86	82	82	81
45	79	81	79	79	79	84	86	86	84	82	81

Time (min)	TC #173	TC #174	TC #175	TC #176	TC #177	TC #178	TC #179	TC #180	TC #181	TC #182	TC #183
46	81	81	79	79	81	84	86	88	84	82	81
47	81	82	81	79	82	86	88	90	86	84	82
48	81	82	81	81	82	86	88	90	86	84	84
49	82	82	81	81	82	88	90	91	88	86	84
50	82	84	82	81	84	90	91	93	88	86	86
51	84	86	82	82	84	90	93	93	90	88	86
52	86	86	84	82	86	91	93	95	91	90	88
53	86	86	84	84	86	91	95	97	91	90	90
54	88	88	86	84	88	93	97	99	93	91	90
55	88	90	86	86	90	95	99	100	93	93	91
56	90	90	88	86	90	97	100	102	97	93	91
57	90	91	88	88	91	97	102	104	97	95	93
58	91	93	90	90	93	99	102	104	99	97	95
59	93	93	91	90	93	100	104	106	100	99	97
60	93	95	91	90	95	100	106	108	100	100	99
61	95	97	93	91	95	104	108	109	104	100	99
62	97	97	95	93	95	104	109	111	104	102	100
63	97	99	95	93	99	106	111	113	106	104	102
64	99	100	97	95	99	108	113	115	108	106	102
65	100	100	99	97	100	109	115	118	109	108	106
66	100	102	99	99	102	111	117	120	111	109	106
67	104	104	100	100	104	111	118	122	113	111	108
68	104	106	102	100	104	115	120	124	115	113	109
69	106	108	104	102	106	117	122	126	117	115	111
70	108	109	104	104	108	118	124	129	118	117	113
71	109	111	108	106	109	120	127	131	120	118	115
72	109	111	108	108	111	122	129	135	122	118	115
73	111	113	109	108	111	124	131	136	124	120	118
74	113	115	111	109	115	126	133	140	126	122	120
75	115	117	113	111	115	127	135	144	127	124	122
76	117	118	115	113	117	129	138	145	131	126	124
77	118	118	117	115	118	131	140	149	133	127	126
78	120	120	118	115	120	133	142	154	135	129	127
79	122	122	118	118	122	136	145	158	136	131	129
80	124	124	120	118	126	136	147	163	140	133	131
81	126	126	122	120	126	140	151	169	142	136	133
82	127	127	124	122	127	142	153	172	145	138	135
83	127	129	126	124	129	144	156	180	149	140	136
84	129	131	127	126	131	145	160	185	153	144	138
85	131	133	129	127	133	147	163	192	154	145	140
86	133	135	131	129	135	151	167	199	156	147	142
87	135	136	133	131	136	153	171	207	158	151	145
88	136	138	135	133	138	154	174	214	162	153	147
89	138	140	136	135	140	158	178	221	167	154	151
90	140	142	138	136	144	160	181	230	169	158	153
91	142	144	140	138	144	162	187	237	174	158	154

Time (min)	TC #173	TC #174	TC #175	TC #176	TC #177	TC #178	TC #179	TC #180	TC #181	TC #182	TC #183
92	144	145	142	140	147	165	190	244	178	162	156
93	145	147	144	142	147	169	196	253	183	163	158
94	147	149	145	144	151	169	199	262	187	167	162
95	149	151	147	145	153	172	205	270	192	171	163
96	151	153	149	147	154	176	210	279	196	172	165
97	153	154	151	149	156	178	214	286	201	176	169
98	154	156	153	151	158	181	219	295	205	178	171
99	156	158	154	153	160	183	225	302	210	181	174
100	158	160	158	154	162	187	230	311	214	185	176
101	160	162	158	156	165	190	235	318	219	189	180
102	162	163	160	158	165	192	239	327	223	192	183
103	163	165	163	162	169	196	246	334	228	196	185
104	165	167	165	162	171	199	250	342	234	198	189
105	167	171	167	165	172	201	255	349	237	201	190
106	169	172	169	167	174	205	261	358	243	205	194
107	172	174	171	169	178	208	266	365	248	208	198
108	172	176	172	171	180	212	271	372	253	212	199
109	174	178	174	172	181	216	277	379	257	216	203
110	176	180	176	174	183	219	282	387	262	219	207
111	178	181	180	178	187	223	288	394	266	223	208
112	180	183	181	180	190	226	293	401	273	226	212
113	181	185	183	181	190	230	298	408	277	230	216
114	183	187	185	183	194	234	304	415	282	234	219
115	187	190	187	187	198	235	309	423	288	237	223
116	189	190	189	187	199	241	316	430	291	241	226
117	190	194	190	190	201	244	322	437	297	246	230
118	192	196	192	192	205	248	327	444	302	250	232
119	194	198	194	194	207	252	333	451	307	253	235
120	196	199	198	198	210	255	338	459	426	246	354
121	198	201	199	199	212	259	345	466	446	252	406
122	199	203	201	201	216	262	349	466	340	306	412
123	201	205	203	205	219	268	356	520	473	412	415
124	203	207	205	207	221	271	361	522	480	363	421
125	205	208	208	208	225	275	367	527	460	342	424
126	207	212	210	210	226	280	372	540	487	424	426
127	208	214	212	214	230	284	378	550	460	444	424
128	210	216	214	216	234	288	385	558	516	441	381
129	212	217	216	217	235	291	390	567	500	462	273
130	214	219	217	221	239	297	396	576	527	462	277
131	216	221	219	223	243	300	401	583	509	457	280
132	217	223	223	225	244	304	406	572	502	403	286
133	219	225	225	228	248	309	414	599	509	495	289
134	221	226	226	230	250	313	419	612	516	478	293
135	223	230	228	234	253	318	426	615	549	500	298
136	225	232	230	235	257	322	432	622	565	504	302
137	226	234	234	237	261	325	437	622	565	493	306

Time (min)	TC #173	TC #174	TC #175	TC #176	TC #177	TC #178	TC #179	TC #180	TC #181	TC #182	TC #183
138	228	235	235	241	262	331	444	628	702	511	311
139	230	237	237	243	266	334	450	631	721	511	315
140	232	239	241	246	270	340	457	630	725	518	320
141	234	241	243	248	273	343	462	635	729	522	324
142	237	244	244	252	277	349	468	640	738	511	329
143	237	246	246	253	280	352	475	648	741	516	333
144	241	248	250	257	284	358	480	655	604	522	338
145	243	250	252	261	288	363	487	660	743	646	342
146	244	252	253	262	291	367	493	640	765	680	383
147	246	255	255	266	293	372	500	666	779	694	480
148	248	257	259	268	297	378	507	687	781	689	489
149	250	259	261	271	300	383	513	703	761	667	491
150	253	262	264	275	306	387	520	698	793	653	459
151	255	264	266	277	307	392	525	712	788	687	522
152	257	266	270	280	313	397	532	720	802	703	669
153	259	270	271	284	315	403	538	703	698	714	534
154	262	271	275	288	320	406	545	693	810	714	536
155	264	273	277	289	324	412	552	705	678	725	525
156	266	277	280	293	327	417	558	716	817	732	433
157	268	279	282	297	331	423	565	714	822	736	450
158	270	282	286	300	334	428	572	725	831	736	583
159	273	284	288	302	338	433	579	738	824	741	590
160	275	288	291	306	343	439	585	720	846	730	615
161	277	289	295	309	347	444	592	738	837	750	698
162	280	293	298	313	351	450	599	743	840	754	702
163	282	295	300	316	356	455	606	756	804	756	682
164	286	298	304	320	360	460	612	752	795	757	694
165	288	300	307	324	363	468	619	756	815	756	703
166	291	304	311	327	367	471	626	768	831	752	712
167	293	306	315	331	372	478	633	775	714	739	718
168	297	309	318	334	378	484	640	766	727	680	720
169	298	313	322	340	381	489	648	781	783	729	748
170	302	316	325	343	387	496	653	784	775	734	745
171	304	318	329	347	390	502	660	790	736	723	797
172	307	322	333	351	396	507	673	795	687	658	792
173	311	325	336	356	399	514	678	802	694	693	806
174	313	329	340	360	405	520	673	799	792	703	817
175	316	333	345	363	410	527	687	804	712	716	824
176	320	336	349	367	414	532	673	819	824	723	792
177	324	340	352	372	419	538	678	831	685	730	833
178	327	343	358	378	424	545	682	835	694	829	842
179	329	347	361	381	430	550	694	842	698	797	831
180	333	351	367	385	435	558	696	856	693	856	774
Max Temp:	405	423	439	457	507	630	768	928	765	928	846
Max Allowed:	397	397	397	397	397	397	397	397	397	397	397

Time (min)	TC #184	TC #185	TC #186	TC #187	TC #188	TC #189	TC #190	TC #191	TC #192	TC #193	TC #194
0	72	72	72	72	72	72	72	72	70	70	70
1	72	72	72	72	72	72	72	70	70	70	70
2	72	72	72	72	72	72	72	72	70	70	70
3	72	72	72	72	72	72	72	72	70	70	70
4	72	72	72	72	72	72	72	72	70	70	70
5	72	72	72	72	72	72	72	72	70	70	70
6	72	72	72	72	72	72	75	68	70	70	70
7	72	72	72	72	72	72	72	72	70	70	70
8	72	72	72	72	72	72	72	72	72	70	68
9	72	72	72	72	72	72	72	70	70	70	70
10	72	72	72	72	72	72	72	72	70	70	68
11	72	72	72	72	72	72	72	72	70	70	70
12	72	72	72	72	72	72	72	72	70	70	70
13	72	72	72	72	72	72	72	72	70	70	68
14	72	72	72	72	72	72	72	72	72	70	68
15	72	72	72	72	72	73	72	70	70	70	70
16	72	72	72	72	72	72	72	70	70	70	70
17	72	72	72	72	72	72	72	70	70	70	68
18	72	72	73	72	72	72	72	72	72	70	70
19	72	72	73	72	73	72	72	70	70	70	70
20	72	72	73	72	72	72	72	72	70	70	68
21	72	72	73	72	73	72	72	70	72	70	70
22	72	72	75	72	73	73	72	72	70	70	70
23	72	73	73	72	73	73	72	72	70	70	70
24	72	73	75	73	72	73	72	72	70	70	70
25	72	73	75	73	72	73	72	72	72	72	70
26	72	73	75	73	72	73	72	72	70	70	70
27	72	75	77	73	73	73	72	72	70	70	70
28	72	75	79	75	73	75	72	72	72	70	70
29	73	75	79	73	73	75	73	72	72	70	70
30	73	77	79	75	73	75	73	72	72	72	70
31	73	77	81	75	73	75	73	72	72	72	70
32	75	77	81	75	75	77	73	72	72	72	70
33	75	79	82	77	75	77	73	73	72	72	70
34	75	79	84	77	75	77	73	73	72	72	70
35	75	81	86	77	75	79	75	73	72	72	70
36	75	81	88	77	77	79	75	73	73	72	70
37	75	82	88	79	77	81	73	73	73	72	70
38	77	82	90	81	79	81	75	73	73	73	70
39	77	84	91	81	79	81	75	75	73	73	70
40	77	86	93	81	79	82	75	75	73	75	72
41	77	86	95	82	81	82	77	75	75	75	72
42	79	88	97	82	81	84	77	77	75	73	72
43	79	90	99	84	82	84	77	77	75	75	72
44	79	90	100	84	82	86	79	77	75	75	72
45	81	91	102	86	82	88	79	77	77	77	72

Time (min)	TC #184	TC #185	TC #186	TC #187	TC #188	TC #189	TC #190	TC #191	TC #192	TC #193	TC #194
46	81	93	104	88	84	90	81	79	77	77	72
47	82	95	106	88	86	90	81	79	77	77	72
48	82	97	108	90	86	91	81	81	79	77	72
49	82	97	111	91	88	93	82	81	79	79	73
50	84	99	113	91	90	93	82	82	81	79	73
51	86	100	115	93	90	95	84	82	81	81	75
52	86	102	118	95	91	97	86	84	82	81	75
53	88	104	120	97	93	99	86	84	82	81	75
54	90	106	122	97	93	100	86	86	84	82	75
55	90	108	126	100	95	100	88	86	86	82	75
56	91	109	127	100	97	102	88	88	86	84	77
57	93	113	129	102	99	104	90	90	88	86	77
58	93	113	131	104	100	106	91	90	88	86	77
59	95	115	135	106	100	108	91	91	90	86	77
60	97	117	136	108	102	109	93	91	91	88	79
61	99	118	138	109	104	111	93	93	91	90	79
62	99	120	142	111	104	111	95	95	93	90	79
63	100	122	144	111	106	115	97	97	95	91	81
64	102	126	147	113	108	115	99	99	97	93	81
65	104	127	149	115	109	117	100	100	97	93	82
66	106	129	151	117	111	118	100	100	100	95	82
67	108	131	153	118	113	122	102	102	100	95	82
68	108	133	156	120	115	122	104	104	102	99	84
69	111	135	158	122	117	124	106	106	104	99	84
70	111	136	160	124	117	126	108	106	106	100	84
71	113	140	163	126	118	127	108	108	108	102	86
72	115	142	165	127	120	129	109	109	109	102	86
73	117	144	169	129	122	133	111	111	109	104	88
74	118	145	171	131	126	135	113	111	111	106	90
75	120	149	172	133	126	136	115	115	113	108	90
76	122	151	176	135	127	138	117	117	115	108	90
77	124	153	178	136	129	140	118	118	118	109	91
78	126	154	180	138	131	142	118	120	118	111	91
79	127	158	183	140	133	145	122	122	120	113	93
80	129	160	185	144	136	147	122	124	122	115	93
81	131	162	189	144	138	149	124	126	124	117	95
82	133	165	190	147	138	151	126	127	126	117	97
83	135	167	194	149	140	153	127	129	127	118	97
84	138	169	198	151	142	154	129	129	129	120	99
85	140	172	199	153	144	158	131	131	131	122	100
86	140	174	203	154	147	160	133	133	133	124	100
87	144	178	207	156	149	162	135	135	135	126	100
88	145	180	210	160	151	165	136	136	136	126	102
89	147	183	214	162	153	167	138	138	138	129	104
90	149	185	217	162	154	171	140	140	140	129	104
91	153	189	221	165	156	172	142	144	140	131	106

Time (min)	TC #184	TC #185	TC #186	TC #187	TC #188	TC #189	TC #190	TC #191	TC #192	TC #193	TC #194
92	154	192	225	167	160	176	144	144	144	133	108
93	156	196	230	169	162	178	145	145	145	135	108
94	160	199	235	172	165	181	147	149	147	136	109
95	162	201	241	174	165	183	149	151	149	136	109
96	163	205	248	176	169	187	151	151	151	138	111
97	167	210	253	180	171	190	153	153	153	140	111
98	169	214	259	181	174	194	154	154	154	142	111
99	172	219	266	183	176	198	156	158	156	142	113
100	174	223	273	187	180	201	160	160	158	144	115
101	178	228	280	190	181	203	160	160	160	145	115
102	181	234	288	192	187	208	162	163	160	147	117
103	183	239	295	194	187	212	165	165	163	147	117
104	187	244	302	199	190	216	167	167	165	149	117
105	190	250	309	201	194	219	169	169	167	151	118
106	192	255	318	205	198	223	172	171	169	151	118
107	196	261	325	208	201	228	174	172	171	153	118
108	199	268	334	212	203	234	176	174	172	154	120
109	203	273	343	216	207	237	178	176	174	154	120
110	207	280	352	219	212	243	181	178	176	156	120
111	208	288	360	223	214	248	183	180	178	156	122
112	214	295	369	228	217	252	187	181	180	156	122
113	217	300	378	232	223	257	189	185	181	158	124
114	219	307	388	237	226	262	190	187	183	160	124
115	225	315	396	241	230	268	194	190	185	162	126
116	228	320	405	244	234	273	198	190	187	162	127
117	232	327	414	248	239	279	199	194	189	162	126
118	235	334	424	253	243	390	203	196	190	500	127
119	241	342	433	259	246	401	205	198	194	516	129
120	426	349	442	264	252	412	208	199	196	734	180
121	459	354	451	268	255	417	212	201	198	799	181
122	261	361	460	273	261	424	214	205	199	806	183
123	495	491	469	277	264	430	217	207	201	810	183
124	504	487	478	282	372	318	221	493	203	459	189
125	466	387	486	288	561	441	223	507	207	806	192
126	509	390	495	293	568	442	226	511	208	799	196
127	655	397	504	298	577	453	230	514	293	811	199
128	487	408	511	295	576	439	234	513	376	657	203
129	673	414	536	432	563	459	237	435	421	531	388
130	522	457	550	313	529	356	239	367	410	194	208
131	651	428	534	318	554	477	327	576	430	550	212
132	642	457	541	300	543	399	347	568	415	268	239
133	687	496	550	304	556	415	347	576	428	352	216
134	689	502	558	309	590	496	666	516	439	570	214
135	712	514	565	316	574	491	673	511	396	784	203
136	732	525	574	318	536	392	680	473	435	477	210
137	712	518	581	338	522	399	678	482	428	493	162

Time (min)	TC #184	TC #185	TC #186	TC #187	TC #188	TC #189	TC #190	TC #191	TC #192	TC #193	TC #194
138	770	586	588	349	523	405	682	477	394	406	163
139	779	594	595	354	522	410	685	486	405	408	165
140	788	599	604	369	527	417	691	477	405	410	442
141	783	608	612	372	531	423	694	493	388	417	439
142	792	603	716	383	588	428	702	633	414	421	169
143	793	610	721	424	594	435	705	705	419	412	169
144	779	561	730	399	597	441	709	648	592	639	171
145	799	646	738	397	603	446	685	689	478	507	171
146	817	644	691	414	653	451	702	721	324	462	172
147	817	671	748	410	615	457	721	619	415	619	234
148	831	702	711	403	678	464	721	583	511	797	246
149	844	745	716	421	678	469	687	615	786	759	574
150	844	752	702	421	716	475	574	540	826	714	626
151	856	756	712	423	702	482	727	586	786	761	635
152	846	761	714	424	694	487	741	601	741	734	635
153	819	727	712	432	729	493	660	534	779	752	635
154	840	734	707	581	709	498	745	604	732	705	700
155	822	757	716	572	727	504	750	615	633	774	725
156	846	777	709	525	723	509	504	644	689	739	666
157	847	775	721	459	732	516	507	658	684	739	433
158	844	765	696	482	711	522	507	694	487	750	685
159	824	777	696	520	727	527	513	738	478	752	714
160	847	786	696	489	712	532	520	750	648	759	622
161	871	786	696	495	741	538	527	743	565	766	653
162	871	788	734	669	745	545	532	777	714	756	676
163	889	802	730	507	745	550	534	779	696	754	703
164	903	810	730	514	743	556	538	777	819	790	691
165	900	817	763	520	768	561	703	750	847	813	698
166	896	831	777	550	784	565	817	808	840	819	743
167	882	786	783	532	797	568	808	817	842	828	721
168	907	716	783	703	788	572	822	819	842	819	705
169	918	817	781	727	790	576	811	831	849	817	716
170	912	831	774	694	779	613	786	837	761	838	756
171	919	851	799	660	799	626	829	822	824	856	788
172	928	801	799	563	765	633	801	849	824	860	792
173	919	808	849	621	702	642	727	849	826	851	811
174	945	799	853	646	801	657	721	741	820	851	822
175	946	817	856	777	786	664	777	804	838	855	829
176	907	820	862	622	817	664	819	820	835	858	842
177	972	824	869	799	774	676	835	766	833	856	851
178	997	835	804	829	817	676	831	781	905	864	849
179	925	896	837	702	824	693	840	810	891	864	775
180	934	887	882	896	842	684	835	864	894	849	846
Max Temp:	1006	959	954	968	914	756	907	936	964	919	916
Max Allowed:	397	397	397	397	397	397	397	397	395	395	395

Time (min)	TC #195	TC #196	TC #197	TC #198	TC #199	TC #200	TC #201	TC #202	TC #203	TC #204	TC #205
0	68	68	70	70	70	72	70	72	72	72	72
1	68	68	68	70	70	70	72	72	72	72	72
2	68	68	68	70	70	72	70	72	72	72	72
3	68	68	70	70	70	72	70	72	72	72	72
4	68	68	68	70	70	70	70	72	72	72	72
5	68	68	68	70	70	72	72	72	72	72	72
6	68	68	68	70	70	72	72	72	72	72	72
7	68	68	70	70	70	72	72	72	72	72	72
8	68	68	70	70	70	72	72	72	72	72	72
9	68	68	68	70	70	72	72	72	72	72	72
10	68	68	68	70	70	70	70	72	72	72	72
11	68	68	68	70	70	72	70	70	72	72	72
12	68	68	70	70	70	70	70	72	72	72	72
13	68	68	70	70	70	72	70	72	72	72	72
14	68	68	70	70	70	72	70	72	72	72	72
15	68	68	70	70	70	72	70	72	72	72	72
16	68	68	70	70	72	70	70	70	72	72	72
17	68	68	68	70	70	70	70	72	72	72	72
18	68	68	70	70	70	72	70	70	72	72	72
19	68	68	68	68	70	70	70	72	72	72	72
20	68	68	68	70	70	70	72	72	72	72	72
21	68	68	68	70	70	72	70	72	72	72	72
22	68	68	68	70	72	72	70	70	70	72	72
23	68	68	68	70	70	72	72	70	72	72	72
24	68	68	70	70	70	72	70	72	72	72	72
25	68	68	68	70	70	70	72	70	72	72	72
26	68	68	70	70	70	70	70	72	72	72	72
27	68	68	70	70	70	72	72	70	72	72	72
28	68	68	68	70	70	70	70	72	72	72	72
29	68	68	68	70	70	70	70	70	72	72	72
30	68	68	68	70	70	72	72	72	72	72	72
31	68	68	68	70	70	70	72	72	72	72	72
32	68	68	68	70	70	70	72	72	72	72	72
33	68	68	70	68	70	70	72	72	72	72	72
34	68	68	68	70	70	72	70	72	72	72	72
35	68	68	68	70	70	72	72	72	72	72	72
36	68	68	70	70	72	72	72	72	72	72	72
37	68	68	70	70	70	70	72	72	72	72	72
38	68	68	70	70	70	72	70	72	72	72	72
39	68	68	70	70	72	72	72	72	72	72	72
40	68	70	70	70	72	72	72	72	72	72	73
41	68	68	70	70	72	72	72	72	72	72	73
42	68	68	70	70	72	72	72	72	72	73	73
43	68	68	68	72	72	72	72	72	72	72	73
44	68	68	70	72	72	72	72	72	72	73	73
45	68	68	70	72	72	72	72	72	72	73	73

Time (min)	TC #195	TC #196	TC #197	TC #198	TC #199	TC #200	TC #201	TC #202	TC #203	TC #204	TC #205
46	68	68	70	70	72	72	72	73	73	73	73
47	68	68	70	70	72	73	72	73	73	73	75
48	68	68	70	72	72	73	72	72	73	73	73
49	68	68	70	70	72	73	73	73	73	73	73
50	68	68	72	72	72	73	73	73	73	73	75
51	68	68	70	72	72	73	73	73	73	75	75
52	68	70	70	72	72	73	73	73	75	75	75
53	68	68	70	72	73	73	73	73	73	75	75
54	70	70	72	72	73	73	73	73	75	75	75
55	70	70	70	72	73	73	73	75	75	75	77
56	70	70	72	72	73	75	75	75	75	75	77
57	70	70	72	73	73	75	75	75	75	77	77
58	68	70	72	73	75	75	75	75	75	77	77
59	70	70	72	73	75	75	75	77	77	77	79
60	70	72	72	73	75	75	75	75	77	77	79
61	70	72	72	73	75	77	75	77	77	79	79
62	70	72	72	75	75	77	77	77	77	77	79
63	70	72	72	75	75	77	77	79	79	79	81
64	70	72	73	75	77	77	77	79	79	79	81
65	70	72	73	77	77	77	79	79	79	81	82
66	70	72	73	75	77	79	79	79	79	81	82
67	72	72	73	75	77	79	79	79	81	81	82
68	72	72	75	77	79	81	81	81	81	82	84
69	72	72	73	77	79	81	81	82	82	82	84
70	72	73	75	77	81	81	81	82	82	84	84
71	72	73	75	79	81	81	82	82	82	84	86
72	72	73	75	79	81	82	82	82	82	84	86
73	72	73	75	79	81	82	82	84	84	86	86
74	73	73	77	79	81	82	84	84	84	86	90
75	73	75	77	81	82	84	84	86	86	88	90
76	73	75	77	81	82	84	84	86	86	88	91
77	73	75	77	81	84	86	86	88	88	90	91
78	73	75	79	82	84	86	86	88	88	90	93
79	73	75	79	82	84	86	88	90	90	91	93
80	75	77	79	84	86	88	90	90	90	91	93
81	75	75	79	84	86	88	90	90	91	93	95
82	75	77	81	84	88	90	91	91	93	93	97
83	75	77	81	86	88	90	91	93	93	95	99
84	75	79	81	86	90	91	93	93	95	95	99
85	75	77	81	88	90	91	93	95	95	97	100
86	77	79	82	88	91	93	95	95	97	99	102
87	79	79	82	88	91	93	95	97	97	99	104
88	77	79	82	90	91	95	97	99	99	100	104
89	79	81	84	90	93	95	97	99	100	102	106
90	79	81	84	91	93	97	99	100	100	104	108
91	79	81	86	91	95	97	100	100	102	104	109

Time (min)	TC #195	TC #196	TC #197	TC #198	TC #199	TC #200	TC #201	TC #202	TC #203	TC #204	TC #205
92	79	81	86	91	97	99	100	102	104	106	109
93	81	82	86	93	97	100	102	104	104	108	111
94	81	82	88	95	97	100	102	104	106	109	113
95	81	82	88	95	99	102	104	106	108	111	115
96	82	84	90	97	100	104	106	108	109	111	118
97	82	84	90	97	100	104	108	109	111	113	120
98	82	86	90	97	102	106	108	109	111	115	120
99	84	86	91	99	102	106	109	111	113	117	122
100	84	86	91	100	104	108	111	113	115	118	126
101	84	86	91	100	106	109	111	115	117	120	127
102	84	86	93	102	106	109	113	117	118	122	129
103	86	88	93	102	108	111	115	117	120	124	131
104	86	88	95	104	109	113	115	118	120	126	133
105	86	90	95	104	109	115	118	120	122	127	136
106	88	90	97	106	111	115	118	120	126	129	138
107	88	91	97	106	113	117	120	124	127	133	140
108	88	91	99	108	113	118	122	126	129	133	144
109	88	91	99	109	115	120	124	127	131	136	145
110	90	93	100	109	117	120	124	129	133	136	149
111	90	93	100	111	117	122	126	131	135	140	151
112	90	93	102	111	118	124	127	133	136	142	153
113	91	93	102	113	120	126	129	133	136	144	156
114	91	95	102	115	120	126	131	135	140	147	158
115	91	95	104	115	122	127	133	138	142	149	162
116	93	97	106	117	124	129	135	138	144	151	163
117	93	97	106	118	124	131	136	140	145	154	167
118	93	99	108	118	126	133	138	142	147	156	171
119	95	99	108	120	127	135	140	144	151	158	172
120	95	99	109	122	129	135	142	145	153	162	176
121	95	100	109	122	129	136	144	149	154	163	180
122	97	100	111	124	131	138	144	151	156	167	181
123	97	102	111	126	133	140	147	153	160	169	185
124	99	102	113	126	135	142	149	154	162	171	189
125	99	104	115	127	136	144	151	156	163	174	192
126	99	104	115	129	136	145	153	158	167	178	194
127	100	106	117	129	138	147	154	162	169	180	198
128	100	106	117	131	140	149	156	163	171	183	201
129	100	106	118	133	142	149	158	165	174	185	205
130	604	108	120	133	144	151	160	167	176	189	208
131	657	108	120	135	145	154	162	169	178	190	210
132	649	109	122	136	147	154	163	172	180	194	214
133	671	109	122	138	147	158	165	174	183	198	217
134	687	111	124	140	149	158	167	176	185	199	221
135	691	111	124	140	151	160	169	178	189	203	225
136	684	113	126	142	153	162	171	180	190	207	228
137	707	115	127	144	154	165	172	181	194	208	234

Time (min)	TC #195	TC #196	TC #197	TC #198	TC #199	TC #200	TC #201	TC #202	TC #203	TC #204	TC #205
138	720	115	129	145	156	167	176	185	196	212	235
139	703	115	129	147	158	169	178	187	199	216	239
140	698	117	131	147	160	171	180	190	201	219	243
141	711	117	133	149	162	172	181	192	205	221	248
142	714	118	133	151	163	174	183	194	207	225	252
143	729	118	135	153	165	176	185	198	210	228	255
144	720	120	136	154	167	178	189	199	214	232	259
145	725	122	136	156	169	180	190	201	216	234	262
146	759	122	138	158	171	181	192	205	219	237	266
147	761	122	140	158	172	183	194	207	221	241	270
148	750	124	140	160	174	185	198	208	225	244	275
149	770	126	142	162	176	187	199	212	228	248	279
150	775	126	144	163	178	190	201	214	230	252	282
151	779	127	145	165	180	192	205	217	234	255	288
152	772	129	145	167	181	194	207	219	237	259	291
153	784	129	147	169	183	196	208	223	239	262	295
154	770	131	149	171	185	198	210	225	243	266	298
155	774	131	151	172	187	199	214	228	246	270	304
156	606	133	151	174	189	203	216	230	250	273	307
157	505	133	153	176	190	205	219	234	252	277	313
158	705	135	154	176	192	207	221	235	255	280	316
159	774	136	156	180	194	208	223	239	259	284	320
160	820	136	158	181	198	212	226	241	262	288	325
161	815	138	158	183	198	214	228	244	266	291	329
162	806	138	160	183	201	216	230	248	268	297	334
163	797	140	162	187	203	217	234	250	271	300	338
164	813	142	163	189	205	221	235	253	275	304	343
165	822	144	165	190	208	223	239	257	280	307	347
166	824	144	167	192	210	226	241	259	282	311	352
167	829	145	169	194	212	228	244	262	286	316	358
168	846	147	171	196	214	230	246	266	289	320	361
169	856	147	171	198	217	234	250	270	293	324	367
170	867	149	172	201	219	235	253	271	297	329	372
171	849	151	174	203	221	239	255	275	300	333	378
172	849	151	176	205	225	241	259	279	304	336	383
173	858	153	178	207	226	244	261	282	309	342	387
174	698	154	180	210	228	246	264	286	313	345	392
175	806	156	181	212	232	250	268	289	316	351	397
176	815	156	183	214	234	252	270	291	320	354	403
177	880	158	185	217	237	255	273	295	324	360	408
178	927	160	187	219	239	259	277	298	329	363	414
179	892	162	189	221	243	261	280	302	333	369	419
180	923	163	192	223	244	264	284	306	336	374	426
Max Temp:	991	231	262	293	314	336	354	378	408	446	498
Max Allowed:	393	393	395	395	395	397	395	397	397	397	397

Time (min)	TC #206	TC #207	TC #208	TC #209	TC #210	TC #211	TC #212	TC #213	TC #214	TC #215	TC #216
0	72	73	72	72	72	72	72	72	72	72	70
1	72	72	72	72	72	72	72	72	72	70	70
2	72	72	72	72	72	72	72	72	72	70	70
3	72	72	72	72	72	72	72	72	72	70	70
4	72	72	72	72	72	72	72	72	72	72	70
5	72	72	72	72	72	72	72	72	72	72	70
6	72	72	73	72	73	72	72	72	72	72	70
7	72	72	72	72	72	72	72	72	72	70	70
8	72	72	72	72	72	72	72	72	72	70	70
9	72	72	72	72	72	72	72	72	72	70	70
10	72	72	72	72	72	72	72	72	72	70	70
11	72	72	72	72	72	72	72	72	72	70	70
12	72	72	72	72	72	72	72	72	72	70	70
13	72	72	72	73	72	72	72	72	72	70	70
14	72	73	72	72	72	72	72	72	72	70	70
15	72	72	72	72	72	70	72	70	72	70	70
16	72	72	72	72	72	72	72	72	72	70	70
17	72	72	72	72	72	72	72	72	72	72	70
18	72	72	72	72	72	72	72	70	72	70	70
19	72	72	72	72	72	72	70	72	72	72	70
20	72	72	72	72	72	72	72	72	72	70	72
21	72	72	73	72	72	72	72	72	72	70	72
22	72	72	72	72	73	72	72	72	72	70	70
23	72	72	72	72	72	72	72	72	72	72	70
24	72	72	72	72	72	72	72	72	72	72	70
25	72	72	72	72	72	72	72	72	72	72	70
26	72	72	73	72	72	72	72	72	72	72	70
27	72	73	72	73	72	72	72	72	72	72	70
28	72	72	72	72	72	73	72	72	72	72	72
29	72	72	72	72	72	72	72	72	72	72	72
30	72	73	72	72	72	72	72	72	72	72	70
31	72	72	73	72	72	72	73	72	72	72	72
32	72	72	72	72	72	72	72	72	72	72	70
33	72	72	73	73	72	72	73	72	73	72	72
34	73	73	73	73	73	72	73	73	73	72	72
35	72	72	73	73	72	72	73	73	73	72	72
36	73	73	73	73	73	72	73	73	73	72	72
37	72	73	73	73	73	73	73	73	72	72	72
38	73	73	73	73	73	73	73	73	73	72	72
39	73	73	73	73	73	73	73	73	73	73	72
40	73	73	75	73	73	73	73	75	73	73	72
41	73	73	73	73	73	73	75	75	73	73	72
42	73	73	73	73	75	73	75	75	73	73	72
43	73	73	75	75	75	73	75	75	75	75	73
44	73	75	75	75	75	73	75	75	75	75	73
45	73	73	75	75	75	75	75	77	75	75	73

Time (min)	TC #206	TC #207	TC #208	TC #209	TC #210	TC #211	TC #212	TC #213	TC #214	TC #215	TC #216
46	75	75	75	75	75	75	75	77	75	75	73
47	75	75	75	75	75	75	77	77	77	77	73
48	75	75	77	77	75	75	77	79	77	77	73
49	77	77	77	77	77	77	77	79	77	77	75
50	75	77	77	77	77	77	79	79	79	77	75
51	77	77	77	79	77	77	79	81	79	79	75
52	77	77	79	79	79	79	81	81	79	79	77
53	77	77	79	79	79	79	81	82	81	79	77
54	77	79	81	79	79	79	81	82	82	81	77
55	77	79	79	79	81	79	82	84	82	81	79
56	79	81	81	81	81	81	82	84	82	82	79
57	79	81	81	81	82	81	84	86	84	84	79
58	79	81	81	81	82	82	84	88	84	84	81
59	81	81	82	82	82	82	86	88	84	84	81
60	81	82	82	82	84	84	86	88	86	86	82
61	81	82	84	84	84	84	86	90	88	86	82
62	82	82	84	84	86	84	88	90	88	88	82
63	82	84	86	86	86	86	90	91	90	88	84
64	82	84	86	86	86	88	90	91	90	90	84
65	84	86	86	86	88	88	91	95	91	90	86
66	84	86	88	88	88	90	93	95	93	91	86
67	86	88	88	88	90	90	93	95	93	93	86
68	86	90	90	90	91	91	95	97	95	93	90
69	88	90	91	91	91	93	97	99	97	95	90
70	88	90	91	91	93	93	97	100	97	97	90
71	90	91	93	93	93	95	99	100	99	97	91
72	90	93	93	95	95	97	100	102	100	99	93
73	91	93	95	95	97	97	102	104	100	100	95
74	93	95	97	97	99	99	104	106	102	100	95
75	93	95	97	99	100	100	104	108	104	102	95
76	93	97	99	100	100	102	106	108	106	104	97
77	95	99	100	100	102	102	108	111	108	106	99
78	97	99	102	102	102	104	108	111	108	108	100
79	99	100	104	104	104	106	109	113	109	108	100
80	100	102	104	104	106	106	111	115	111	109	102
81	100	104	106	106	108	108	113	117	113	111	104
82	102	106	108	108	108	109	115	118	115	113	104
83	102	108	108	109	109	111	117	120	115	115	106
84	104	109	111	111	111	113	118	122	118	117	108
85	106	111	113	113	113	115	120	124	120	117	109
86	108	111	115	115	115	117	122	126	120	118	109
87	109	113	117	117	118	118	124	127	122	120	111
88	111	117	118	118	118	120	126	129	124	122	113
89	113	118	120	120	120	122	127	131	126	124	115
90	115	120	124	122	122	122	129	133	127	126	115
91	118	122	124	124	124	126	131	133	129	127	117

Time (min)	TC #206	TC #207	TC #208	TC #209	TC #210	TC #211	TC #212	TC #213	TC #214	TC #215	TC #216
92	118	124	127	126	126	127	133	136	131	129	118
93	120	126	131	129	127	129	135	138	133	131	120
94	124	129	131	129	131	131	136	140	135	133	122
95	126	131	135	133	133	133	140	144	136	133	122
96	127	135	138	136	135	136	142	144	138	135	126
97	129	136	140	138	136	138	144	147	140	136	126
98	133	140	144	142	140	140	145	149	144	140	127
99	135	142	145	144	142	142	147	153	144	140	129
100	136	145	149	147	144	144	151	154	147	142	129
101	140	149	153	149	147	147	153	156	149	144	131
102	142	151	154	153	151	149	156	158	151	145	133
103	145	154	158	156	153	153	158	160	153	147	135
104	147	158	162	158	156	154	160	165	156	149	136
105	151	162	165	162	158	156	163	167	158	151	138
106	154	165	169	165	162	160	165	171	160	153	140
107	156	169	172	167	163	163	169	172	163	154	140
108	160	172	176	171	167	165	172	176	165	158	144
109	162	176	180	174	169	169	174	178	167	158	145
110	165	178	183	178	172	172	178	181	171	160	145
111	169	183	187	181	176	174	181	185	172	163	147
112	172	187	192	185	180	178	183	189	176	165	149
113	176	190	196	189	183	181	187	192	180	167	153
114	180	194	199	192	187	183	190	196	181	169	154
115	183	198	203	196	190	187	194	199	185	172	154
116	185	201	207	199	194	190	196	203	187	174	158
117	189	205	212	205	198	194	201	207	190	176	158
118	192	210	216	208	201	198	205	210	194	180	162
119	196	214	219	212	205	201	208	214	198	181	163
120	199	217	223	217	208	205	212	217	201	183	165
121	203	223	228	219	212	208	216	223	205	187	167
122	207	226	232	223	216	212	219	226	207	189	169
123	212	230	237	228	219	216	223	230	210	190	171
124	216	234	241	232	223	219	228	235	214	194	172
125	219	239	246	237	228	223	232	239	217	196	176
126	223	244	250	241	232	226	235	243	221	199	178
127	226	248	255	244	235	232	241	248	225	201	180
128	230	253	259	250	241	235	244	252	228	205	181
129	234	257	264	253	244	241	250	257	234	208	185
130	239	262	268	259	248	244	253	262	237	210	187
131	243	266	273	262	253	248	257	266	241	214	190
132	246	271	277	266	257	253	262	270	244	216	192
133	252	275	282	271	262	257	266	275	248	219	196
134	255	280	288	277	266	262	271	280	253	223	198
135	259	284	293	280	271	266	275	284	257	226	201
136	264	289	297	286	275	271	280	289	261	230	205
137	268	295	302	291	280	275	286	295	266	234	207

Time (min)	TC #206	TC #207	TC #208	TC #209	TC #210	TC #211	TC #212	TC #213	TC #214	TC #215	TC #216
138	273	298	306	295	284	280	289	300	270	237	210
139	277	304	311	300	289	286	295	306	275	241	214
140	280	309	316	306	295	289	300	309	279	243	217
141	286	315	322	311	298	295	306	315	284	246	221
142	289	320	327	315	304	298	309	320	288	252	223
143	295	324	333	320	309	304	315	325	291	255	226
144	298	329	338	325	313	309	320	331	297	259	230
145	304	334	342	329	318	313	324	334	302	262	234
146	309	340	347	334	324	318	331	340	306	266	237
147	313	345	352	340	327	324	334	345	309	270	241
148	318	349	358	345	333	329	340	351	315	273	244
149	322	354	363	351	338	333	345	356	320	279	246
150	327	360	369	356	343	338	351	361	324	282	250
151	333	365	374	361	349	343	356	367	329	286	253
152	336	370	379	367	354	349	361	372	334	289	257
153	342	376	385	372	360	354	367	378	338	293	259
154	347	381	390	378	363	360	372	383	343	298	264
155	352	387	396	383	369	365	378	388	349	302	266
156	356	394	401	388	374	370	383	396	354	306	270
157	361	399	406	394	379	376	388	401	358	309	273
158	367	405	412	399	385	381	394	406	363	315	277
159	372	410	417	405	390	387	399	412	369	318	280
160	378	415	424	410	397	392	405	417	374	322	284
161	383	423	430	415	403	397	410	424	379	327	288
162	388	428	435	421	408	403	417	430	385	331	291
163	394	433	442	426	414	408	423	435	390	336	295
164	399	441	448	433	419	415	428	441	396	340	298
165	405	446	455	439	424	421	435	448	401	345	302
166	410	453	460	444	432	426	441	453	405	349	306
167	415	460	468	451	437	432	446	460	412	354	309
168	423	466	473	457	442	439	453	466	417	358	313
169	428	473	480	464	450	444	459	471	423	363	316
170	433	480	487	469	455	451	466	477	428	369	322
171	441	486	493	475	460	457	471	484	433	374	325
172	446	493	500	482	468	462	478	489	439	378	329
173	453	500	507	489	473	469	484	496	444	383	333
174	459	507	514	495	480	475	491	502	450	388	338
175	466	514	522	502	487	482	496	509	457	394	342
176	471	522	529	509	493	489	504	514	462	399	345
177	477	529	536	516	500	495	511	522	468	405	349
178	484	536	547	522	505	514	516	529	475	410	354
179	489	545	561	547	513	540	523	534	480	415	358
180	496	556	577	556	520	565	531	541	487	421	363
Max Temp:	568	629	649	628	592	637	603	613	559	493	433
Max Allowed:	397	398	397	397	397	397	397	397	397	397	395

Time (min)	TC #217	TC #218	TC #219	TC #220	TC #221	TC #222	TC #223	TC #224	TC #225	TC #226	TC #227
0	70	68	68	68	68	70	72	72	73	73	73
1	70	68	68	68	68	70	72	72	73	73	73
2	70	68	68	68	68	70	72	72	73	73	73
3	70	68	68	68	68	70	72	72	73	73	73
4	70	68	68	68	68	70	72	72	73	73	73
5	70	68	68	68	68	70	72	72	72	73	73
6	70	70	68	72	66	70	72	72	72	73	73
7	70	70	68	68	68	70	72	72	73	73	73
8	70	68	68	68	68	70	72	72	72	73	73
9	70	68	68	68	68	70	72	72	72	73	73
10	70	68	68	68	68	70	72	72	73	72	73
11	70	68	68	68	68	70	72	72	73	72	73
12	70	70	68	68	68	70	72	72	73	73	73
13	70	68	68	68	68	70	72	72	72	72	73
14	70	70	68	68	68	70	72	72	72	73	73
15	70	70	70	68	68	70	72	73	72	72	73
16	70	68	68	68	68	70	72	72	72	72	73
17	70	68	68	68	66	70	72	72	73	72	73
18	70	68	68	68	68	70	72	72	73	73	73
19	70	70	68	68	68	70	72	73	73	73	73
20	70	68	68	68	68	70	72	72	73	73	73
21	70	70	68	68	68	72	72	72	73	73	73
22	70	68	68	68	68	70	72	73	73	73	73
23	70	70	68	68	68	70	72	73	73	73	73
24	70	68	68	68	68	72	72	73	73	73	75
25	70	68	68	68	68	72	73	73	75	73	75
26	70	68	68	68	66	72	72	73	73	73	75
27	70	68	68	68	68	70	73	75	73	75	75
28	70	68	68	68	68	72	73	75	75	75	75
29	70	70	68	68	68	72	73	75	75	75	75
30	70	68	68	68	68	72	75	75	75	75	77
31	68	68	68	68	68	72	75	75	77	75	77
32	70	70	68	68	68	72	75	77	77	77	79
33	70	70	68	68	68	73	77	77	77	77	81
34	70	70	68	68	68	73	77	79	79	79	81
35	70	70	68	68	68	73	79	79	79	79	81
36	70	70	68	68	68	75	79	79	81	79	82
37	70	70	68	66	68	75	79	81	81	81	82
38	70	70	68	68	68	75	81	82	82	81	84
39	70	70	68	68	68	77	81	82	82	81	84
40	70	70	70	68	68	77	84	84	84	84	86
41	70	70	70	68	68	77	84	86	86	84	88
42	70	70	68	68	68	79	84	88	86	84	90
43	72	70	68	68	68	79	86	88	88	86	90
44	72	70	68	68	68	81	88	90	90	86	91
45	72	70	68	68	68	81	90	91	91	90	93

Time (min)	TC #217	TC #218	TC #219	TC #220	TC #221	TC #222	TC #223	TC #224	TC #225	TC #226	TC #227
46	72	70	70	68	70	82	91	93	93	90	95
47	72	70	70	68	70	84	93	95	95	91	99
48	72	70	70	68	70	84	95	97	97	93	100
49	72	70	70	68	70	86	97	100	99	95	100
50	72	70	70	68	70	88	99	100	100	97	104
51	73	72	70	68	70	90	100	104	102	99	106
52	73	72	70	68	72	90	102	106	104	102	108
53	73	72	70	68	72	91	104	108	108	104	111
54	73	72	70	68	72	93	108	111	111	108	113
55	75	72	70	68	72	95	109	113	113	109	117
56	75	72	70	68	73	97	113	117	117	113	120
57	75	73	70	68	73	99	115	118	118	117	122
58	75	73	70	68	73	100	117	122	120	120	126
59	75	73	70	68	73	102	118	124	126	124	131
60	77	73	72	68	73	104	122	127	127	129	133
61	77	73	72	68	75	106	126	131	133	133	138
62	79	73	72	70	75	108	127	135	136	136	142
63	79	75	72	70	77	109	131	138	140	142	145
64	79	75	72	70	77	111	133	142	145	147	151
65	79	75	72	70	77	113	136	145	151	151	154
66	81	77	72	70	79	117	140	149	154	156	160
67	81	75	73	70	79	118	142	154	160	162	163
68	82	75	73	70	81	122	145	158	163	165	169
69	82	77	72	70	81	124	149	162	169	171	172
70	82	77	73	72	82	126	153	165	172	176	180
71	82	79	73	70	82	129	154	169	178	180	183
72	84	79	73	72	84	131	158	172	181	185	187
73	86	79	75	72	86	133	162	176	187	189	192
74	86	81	75	72	84	136	165	181	190	192	198
75	86	81	75	72	88	140	169	185	194	198	201
76	88	81	77	72	88	142	172	189	198	199	203
77	88	82	75	72	90	147	174	192	201	203	207
78	90	82	77	72	91	147	180	196	203	205	208
79	91	82	79	73	93	151	183	199	205	207	208
80	91	84	77	73	95	154	187	203	208	208	210
81	91	84	79	73	95	158	192	207	210	208	210
82	93	84	79	73	97	162	199	208	210	210	212
83	95	86	79	73	99	167	207	210	212	210	212
84	95	86	79	73	100	174	208	212	212	210	214
85	97	88	81	73	102	189	210	212	212	210	214
86	99	88	81	75	104	203	210	212	214	210	216
87	99	90	81	75	106	207	210	214	214	210	214
88	100	90	82	75	108	208	212	214	216	210	217
89	100	90	82	75	111	208	212	216	217	212	219
90	100	91	84	77	113	208	212	217	221	212	223
91	102	93	84	77	117	208	212	223	225	212	226

Time (min)	TC #217	TC #218	TC #219	TC #220	TC #221	TC #222	TC #223	TC #224	TC #225	TC #226	TC #227
92	104	93	86	77	120	208	214	228	226	214	228
93	104	93	86	77	122	208	214	230	230	217	230
94	106	95	86	77	126	208	216	234	234	221	234
95	108	97	88	79	127	208	219	237	237	226	237
96	109	97	88	79	129	208	223	241	241	230	241
97	109	99	88	79	131	208	226	243	244	234	244
98	111	99	90	79	133	208	230	248	248	237	248
99	111	100	90	81	135	210	235	252	252	241	252
100	113	100	91	81	135	210	237	255	255	244	255
101	115	102	91	81	135	212	241	257	259	248	259
102	117	104	91	81	136	212	244	262	261	253	262
103	117	104	93	82	138	214	248	266	266	255	266
104	118	104	93	82	138	214	252	268	270	261	270
105	118	106	93	82	140	216	255	271	273	264	273
106	120	108	95	84	140	219	259	277	277	268	277
107	122	108	95	84	140	221	262	280	280	271	280
108	124	108	97	84	140	223	264	284	284	275	286
109	124	109	97	86	142	225	268	288	286	279	289
110	126	111	99	86	142	226	271	291	291	282	293
111	127	111	99	86	142	230	275	295	293	286	297
112	129	113	100	86	142	234	279	298	298	289	300
113	131	115	100	88	142	234	282	302	302	293	304
114	133	115	102	88	142	237	286	307	306	297	307
115	133	117	102	90	142	239	289	311	309	300	311
116	135	117	104	90	142	243	295	316	315	304	315
117	136	118	104	90	142	244	298	320	318	307	318
118	138	120	104	90	142	248	304	325	322	313	322
119	140	120	106	91	144	252	309	331	327	316	327
120	140	122	108	91	144	255	315	336	331	320	331
121	142	124	108	91	145	259	320	342	336	324	334
122	144	124	109	93	145	262	325	347	340	327	338
123	145	126	109	93	147	266	331	352	345	331	342
124	147	126	111	93	147	270	338	358	349	334	345
125	149	127	111	95	149	275	345	363	354	338	351
126	151	129	113	95	151	279	351	370	360	342	354
127	153	131	113	97	151	284	358	378	365	345	358
128	154	133	115	97	153	289	365	385	370	349	363
129	156	133	117	97	153	295	374	392	376	352	367
130	158	135	117	97	154	300	383	401	381	358	372
131	160	136	118	99	156	306	392	408	387	361	376
132	162	138	118	100	158	313	401	417	392	365	381
133	165	140	120	100	158	320	412	426	399	369	385
134	167	142	122	100	160	327	423	435	405	372	390
135	169	144	122	102	162	336	433	446	412	378	394
136	172	145	124	102	163	343	446	457	419	381	399
137	174	147	126	104	165	351	457	469	426	385	403

Time (min)	TC #217	TC #218	TC #219	TC #220	TC #221	TC #222	TC #223	TC #224	TC #225	TC #226	TC #227
138	176	149	127	104	167	358	468	482	433	388	408
139	180	151	127	106	169	363	480	496	442	394	414
140	181	153	129	106	171	370	493	509	451	397	417
141	185	154	131	108	172	378	505	523	446	401	424
142	187	156	133	108	176	383	518	540	464	406	558
143	189	158	135	109	178	390	531	556	468	410	565
144	192	162	136	111	180	396	543	583	518	415	561
145	194	163	136	111	181	403	558	599	547	421	581
146	198	165	138	113	183	408	572	617	648	424	613
147	199	167	140	113	187	414	586	640	676	394	500
148	203	169	142	115	189	419	597	646	709	453	522
149	205	171	144	115	190	424	617	651	723	532	558
150	208	172	145	117	192	430	633	682	743	554	603
151	210	176	147	117	194	435	648	673	748	545	579
152	214	178	147	118	196	442	664	669	703	597	507
153	216	180	149	118	198	448	676	696	714	543	525
154	219	181	151	120	199	453	693	732	729	610	500
155	221	183	153	122	201	459	707	743	743	680	579
156	225	185	154	122	203	464	721	754	757	765	504
157	226	187	156	124	205	469	732	765	772	833	624
158	230	190	158	126	207	475	745	777	786	687	631
159	232	192	160	126	208	480	763	802	797	838	675
160	235	194	162	127	210	484	775	810	813	815	653
161	237	196	162	127	212	489	784	824	828	766	642
162	241	198	165	129	214	493	799	831	847	666	754
163	243	201	165	129	216	498	804	817	896	855	883
164	246	203	167	131	217	502	808	772	901	790	873
165	248	205	169	133	219	507	820	765	946	853	869
166	252	207	171	133	219	511	833	772	961	759	936
167	255	210	172	135	221	514	853	781	979	808	959
168	257	212	174	136	223	520	867	763	997	795	921
169	261	214	176	136	225	523	883	770	813	833	945
170	264	216	178	138	226	527	900	783	806	806	1020
171	268	219	180	140	228	532	914	788	979	712	1069
172	270	221	181	142	230	536	923	820	1074	898	1078
173	273	223	183	142	232	541	930	991	1099	952	1130
174	277	226	185	144	234	545	937	905	1024	928	1144
175	280	228	187	144	235	550	946	874	858	844	1128
176	284	232	189	145	237	554	955	993	1047	973	1137
177	286	234	190	147	239	558	964	910	1042	970	1137
178	289	235	192	149	243	565	973	941	837	1047	1148
179	293	298	194	376	244	570	984	1036	1080	1069	1161
180	297	241	196	397	250	579	999	1150	856	1096	1180
Max Temp:	367	309	264	465	318	649	1071	1222	929	1169	1253
Max Allowed:	395	393	393	393	393	395	397	397	398	398	398

Time (min)	TC #228	TC #229	TC #230	TC #231	TC #232	TC #233	TC #234	TC #235	TC #236	TC #237	TC #238
0	73	73	73	73	73	73	73	73	73	75	73
1	73	73	73	73	73	73	73	73	73	73	73
2	73	73	73	73	73	73	73	73	73	73	73
3	73	73	73	73	73	73	73	73	73	73	73
4	73	73	73	73	73	73	73	73	73	73	73
5	73	73	73	73	73	73	73	73	73	73	73
6	73	73	73	73	73	73	73	73	73	73	73
7	73	73	73	73	73	73	73	73	73	73	73
8	73	73	73	73	73	73	73	73	73	73	73
9	73	73	73	73	73	73	73	73	73	73	73
10	73	73	73	73	73	73	73	73	73	73	73
11	73	73	73	73	72	73	73	73	73	73	73
12	73	73	73	73	73	73	73	73	73	73	73
13	73	73	73	73	73	73	73	73	73	73	73
14	72	73	73	72	73	73	73	73	73	73	73
15	73	73	73	73	73	73	73	73	73	73	73
16	73	75	73	73	72	73	73	73	73	73	73
17	73	73	73	73	73	73	73	73	73	73	73
18	73	73	75	73	73	73	73	73	73	73	73
19	73	73	73	73	73	75	73	73	73	73	72
20	73	73	73	75	73	73	73	73	73	73	73
21	73	73	75	73	75	75	73	73	75	73	75
22	75	75	75	75	73	75	75	75	75	73	73
23	73	75	75	75	75	75	75	75	75	73	75
24	73	73	75	75	77	77	75	75	75	75	73
25	75	75	75	77	75	77	77	77	75	75	75
26	73	75	77	77	77	79	77	77	77	75	77
27	75	75	77	79	77	79	77	77	77	77	75
28	75	75	77	79	79	79	79	79	77	75	77
29	75	77	79	79	79	81	79	79	79	77	77
30	75	77	79	81	81	81	81	81	79	77	77
31	77	77	81	82	81	82	81	81	79	79	79
32	77	77	81	82	82	84	82	82	81	79	79
33	77	79	81	84	84	86	84	82	82	79	81
34	79	79	82	84	84	88	86	84	84	81	82
35	79	81	84	86	86	90	86	86	84	82	82
36	81	82	84	86	88	90	88	86	86	82	84
37	81	82	86	90	88	93	90	88	86	84	84
38	82	84	88	90	91	95	91	90	88	86	86
39	84	84	90	91	91	97	93	91	90	86	88
40	84	86	90	93	93	100	95	93	91	88	90
41	86	88	91	95	97	102	99	95	93	91	91
42	86	88	93	97	99	104	100	97	93	91	93
43	88	90	95	99	100	108	102	100	97	93	95
44	90	91	97	100	102	109	104	100	99	95	99
45	91	93	100	104	104	113	108	104	100	97	100

Time (min)	TC #228	TC #229	TC #230	TC #231	TC #232	TC #233	TC #234	TC #235	TC #236	TC #237	TC #238
46	93	95	102	106	108	117	111	106	104	100	102
47	95	97	104	108	109	118	113	109	106	102	106
48	97	99	106	111	111	122	117	111	108	106	108
49	99	100	108	113	115	126	118	113	111	108	109
50	100	104	111	115	118	129	122	117	113	111	113
51	104	104	113	118	120	133	126	120	117	113	115
52	106	108	115	120	124	138	129	124	118	117	118
53	108	109	118	124	126	140	133	126	122	118	122
54	111	111	120	126	129	145	136	129	126	122	126
55	113	115	124	129	133	149	140	133	127	126	127
56	117	117	127	133	136	154	144	136	131	129	131
57	120	120	129	136	140	158	147	140	135	133	135
58	124	124	133	138	144	162	151	144	138	136	136
59	126	126	136	142	147	167	154	147	142	138	140
60	129	129	138	145	151	171	160	151	145	142	144
61	133	133	142	149	154	176	163	154	149	145	147
62	136	135	145	153	158	181	167	158	153	149	151
63	140	138	149	156	163	185	171	162	156	153	154
64	144	142	153	160	165	190	174	165	160	156	158
65	147	145	156	163	169	196	180	169	163	160	162
66	151	149	160	167	172	201	183	172	167	163	165
67	156	153	162	171	178	208	189	176	171	165	167
68	160	156	167	174	181	216	194	181	174	171	171
69	165	160	169	178	187	223	198	185	178	172	174
70	171	163	174	183	190	230	205	187	183	176	178
71	174	167	178	187	196	237	208	192	187	180	181
72	180	171	181	190	199	244	214	196	190	183	185
73	185	176	185	194	205	253	221	201	194	187	189
74	190	180	189	198	208	262	226	205	198	190	192
75	196	185	192	201	214	271	232	208	201	194	196
76	199	190	196	205	219	280	239	214	205	199	201
77	203	196	199	208	225	289	244	217	208	203	205
78	205	199	203	212	228	300	252	223	214	207	208
79	207	203	207	216	234	309	259	226	217	212	214
80	208	207	210	221	239	320	266	232	221	216	217
81	210	208	214	225	244	331	273	235	226	221	221
82	210	210	217	228	250	343	280	241	230	225	226
83	210	212	221	232	255	354	289	246	235	228	230
84	212	212	225	235	261	367	297	252	239	234	235
85	212	214	228	239	266	379	306	257	244	237	241
86	212	217	232	243	271	394	315	262	248	241	244
87	212	221	234	246	277	408	324	268	253	246	250
88	214	223	237	250	284	423	333	273	259	252	253
89	216	226	241	253	289	439	342	277	262	255	259
90	217	228	244	257	297	455	352	284	268	261	264
91	219	232	246	262	302	471	363	289	273	266	270

Time (min)	TC #228	TC #229	TC #230	TC #231	TC #232	TC #233	TC #234	TC #235	TC #236	TC #237	TC #238
92	225	235	252	266	309	486	374	295	279	270	275
93	230	237	255	270	315	504	383	302	282	275	279
94	234	241	259	273	322	522	396	307	288	280	284
95	237	244	262	277	329	538	406	313	293	284	288
96	241	248	266	282	334	556	417	320	298	288	295
97	244	250	268	286	342	574	428	325	302	293	300
98	248	253	273	291	349	592	462	392	307	298	306
99	252	257	277	295	358	608	453	340	313	302	311
100	257	261	280	298	365	626	676	887	318	307	316
101	259	264	282	304	372	644	684	864	322	313	324
102	264	268	288	307	379	662	666	801	327	316	329
103	266	271	291	313	388	680	712	907	333	322	336
104	271	275	295	316	396	698	739	907	414	327	342
105	275	279	298	322	403	716	657	738	750	333	349
106	279	282	302	327	412	734	676	739	781	342	354
107	282	286	306	331	419	754	696	714	723	347	361
108	288	289	309	336	428	772	694	729	802	349	367
109	291	293	313	342	437	790	716	651	815	574	374
110	295	297	316	345	446	808	720	698	815	700	381
111	298	300	320	351	455	826	662	601	811	822	388
112	302	304	324	356	464	842	691	725	837	694	396
113	306	307	327	361	473	869	725	759	752	851	522
114	309	309	333	367	482	885	788	622	743	873	511
115	315	315	336	370	491	896	768	577	871	910	565
116	318	316	340	378	500	914	882	653	802	898	653
117	322	322	343	381	509	930	869	628	788	934	689
118	325	324	347	388	518	943	865	532	831	918	685
119	331	329	352	392	529	959	878	547	775	966	734
120	334	333	356	399	538	973	772	491	838	982	734
121	338	336	361	405	547	984	921	495	954	1008	671
122	342	340	365	410	556	1002	952	498	909	1026	678
123	345	343	370	415	567	1011	948	507	878	1036	680
124	351	347	374	423	576	1026	909	680	838	1049	680
125	354	351	378	428	585	1040	916	689	856	1063	964
126	358	354	383	435	595	1053	914	725	945	1076	995
127	363	360	388	441	604	1067	896	837	937	1089	516
128	367	363	392	448	615	1081	808	874	964	1103	554
129	370	367	397	453	624	1096	862	882	993	1117	594
130	376	370	403	460	635	1107	905	903	1042	1130	657
131	379	376	408	468	646	1071	874	912	1063	1141	783
132	385	379	414	473	657	1049	883	910	1060	1153	864
133	388	383	419	480	667	1103	898	945	1110	1166	945
134	394	388	424	487	678	1128	919	941	1123	1177	963
135	397	392	430	495	689	954	930	963	1144	1189	1006
136	403	396	435	502	698	1112	948	914	1166	1202	1033
137	406	401	441	511	709	1189	961	959	1184	1216	1078

Time (min)	TC #228	TC #229	TC #230	TC #231	TC #232	TC #233	TC #234	TC #235	TC #236	TC #237	TC #238
138	412	406	446	518	720	1204	991	1002	1198	1229	1099
139	417	410	451	525	732	1216	1031	1024	1209	1242	1123
140	421	415	457	534	743	730	1040	979	1215	1252	1164
141	426	421	464	615	725	711	1049	923	1222	1011	878
142	525	424	664	626	766	707	1114	988	1224	986	855
143	455	430	635	520	678	874	910	1024	1227	1027	1207
144	532	496	568	597	698	806	838	1080	723	732	1225
145	545	520	619	599	711	838	694	1116	716	790	934
146	549	522	649	651	687	862	720	1123	730	716	914
147	649	550	734	615	702	885	693	1089	957	781	864
148	687	660	775	693	698	887	732	1141	779	801	860
149	673	559	723	696	702	918	781	887	799	990	1238
150	687	716	729	702	711	1015	759	910	815	770	1074
151	703	730	718	745	730	943	775	1078	799	738	1299
152	718	770	705	720	743	966	784	1098	860	741	1053
153	734	756	756	772	754	795	774	846	909	815	1285
154	754	772	743	793	765	790	781	903	892	887	1218
155	795	790	714	781	784	844	799	972	885	894	903
156	804	799	759	822	790	828	855	955	910	856	979
157	801	844	813	856	797	910	862	891	882	925	1033
158	813	822	783	835	804	936	880	952	934	851	770
159	822	876	799	894	806	842	878	898	914	937	891
160	837	828	855	829	826	882	876	856	811	907	896
161	847	871	788	876	851	892	883	833	842	966	885
162	869	896	698	892	811	837	921	903	880	883	900
163	869	921	860	873	858	860	937	882	844	970	900
164	878	916	867	939	878	970	932	894	882	977	943
165	878	945	898	921	900	948	887	894	905	1051	912
166	882	927	885	968	905	972	936	910	871	1017	952
167	891	964	918	979	916	973	826	900	979	999	961
168	907	964	853	930	946	889	1002	934	936	986	1006
169	928	955	907	941	941	799	828	945	912	1018	1062
170	943	982	786	939	1002	855	909	964	990	1013	1069
171	963	1002	811	939	1062	959	993	781	1159	1042	1144
172	984	1009	930	970	1069	896	1049	826	1090	1094	1116
173	982	1072	968	957	1103	993	1020	932	1161	1125	1107
174	997	1107	1040	1036	1092	982	1008	977	1170	1112	1152
175	1006	1135	1011	1047	1090	1033	981	990	1222	1159	1157
176	1020	1155	912	1233	1134	1067	1103	1069	1206	1191	1177
177	1029	1171	945	1139	1164	1132	1105	1105	1227	1197	1195
178	1044	1175	1036	1180	1220	1045	1114	1134	1211	1202	1209
179	1056	1191	1054	1144	1220	1051	1107	1164	1220	1207	1215
180	1072	1200	1125	1180	1218	1153	1186	1180	1249	1225	1220
Max Temp:	1145	1273	1198	1253	1291	1226	1259	1253	1322	1300	1293
Max Allowed:	398	398	398	398	398	398	398	398	398	400	398

Time (min)	TC #239	TC #240	TC #241	TC #242	TC #243	TC #244	TC #245	TC #246	TC #247	TC #248	TC #249
0	73	73	73	73	73	73	73	73	72	72	68
1	73	73	73	73	73	73	73	73	72	72	68
2	73	73	73	73	73	73	73	72	72	72	68
3	73	73	73	73	73	73	73	73	72	72	68
4	73	73	73	73	73	73	73	73	72	70	70
5	73	73	73	73	73	73	73	73	72	70	68
6	73	73	73	73	73	75	73	72	72	72	68
7	73	73	73	73	73	73	73	73	72	72	68
8	73	73	73	73	73	73	73	73	72	70	68
9	73	73	73	73	73	73	73	72	72	72	70
10	73	73	73	73	73	73	73	72	72	70	68
11	73	73	73	73	73	73	73	72	72	70	68
12	73	73	73	73	73	73	73	72	72	72	68
13	73	73	73	73	73	73	73	72	72	70	68
14	73	73	73	73	73	73	73	73	73	72	68
15	73	73	73	73	73	73	73	72	72	72	70
16	73	72	73	73	73	73	73	72	73	72	70
17	75	73	73	73	73	73	73	72	72	70	68
18	73	73	73	73	73	73	73	73	73	70	68
19	75	73	73	73	73	73	73	73	72	72	68
20	75	73	73	73	73	73	73	73	72	72	68
21	75	73	73	73	73	73	73	73	72	72	68
22	77	75	75	73	75	75	73	73	73	72	68
23	77	73	75	75	75	75	73	73	72	72	68
24	77	75	75	75	75	75	75	73	72	70	68
25	79	75	75	75	75	75	75	75	73	70	68
26	79	75	75	77	75	77	75	73	73	72	70
27	81	75	75	75	77	75	77	75	73	72	68
28	81	75	77	75	77	77	75	75	75	72	68
29	82	77	77	77	77	77	75	75	73	72	68
30	82	77	79	77	79	79	77	75	75	72	68
31	84	77	79	79	79	79	77	77	73	72	68
32	86	79	79	79	79	79	79	75	75	72	68
33	88	79	79	81	81	81	79	77	77	72	68
34	90	81	81	81	81	82	81	79	77	73	68
35	90	81	82	82	82	82	81	79	77	73	68
36	93	82	82	84	82	82	82	79	77	73	68
37	93	84	84	84	84	84	82	81	79	73	68
38	95	84	84	86	86	86	84	81	79	73	68
39	99	86	86	86	86	86	84	82	81	73	68
40	100	88	88	88	88	88	86	82	81	75	70
41	102	90	90	90	90	90	88	84	82	75	70
42	104	91	91	91	91	91	90	86	82	75	70
43	108	93	93	93	93	93	91	88	84	75	68
44	109	95	93	95	95	95	93	90	86	77	68
45	111	95	97	97	97	97	95	91	88	77	70

Time (min)	TC #239	TC #240	TC #241	TC #242	TC #243	TC #244	TC #245	TC #246	TC #247	TC #248	TC #249
46	115	99	99	100	99	99	97	93	88	77	70
47	118	100	100	102	100	102	100	93	90	79	70
48	120	102	102	104	104	104	102	97	91	79	70
49	124	104	106	106	106	106	104	97	93	81	70
50	126	108	108	109	108	108	106	100	95	81	70
51	129	109	111	111	109	111	109	102	97	82	70
52	133	113	113	115	113	113	111	106	99	84	72
53	135	115	115	117	115	117	115	108	100	84	72
54	138	118	118	120	118	120	118	111	104	86	72
55	142	122	120	124	120	122	120	113	106	88	72
56	144	124	126	126	124	126	124	115	108	88	72
57	149	127	127	129	127	127	127	118	111	90	72
58	153	131	131	133	131	131	129	122	113	91	73
59	154	133	133	135	133	135	133	124	115	93	73
60	158	136	136	138	136	138	136	127	118	95	73
61	162	140	140	142	140	144	140	131	122	97	73
62	165	144	144	145	144	145	144	135	124	97	73
63	169	145	147	147	147	149	147	138	126	100	75
64	172	149	151	151	149	153	151	142	129	100	75
65	174	153	154	154	154	156	154	145	133	104	75
66	178	156	156	158	156	160	158	149	136	106	77
67	181	160	162	162	160	163	162	153	138	108	77
68	185	163	163	165	163	165	165	156	142	109	77
69	189	167	167	169	167	171	169	160	145	111	77
70	192	171	171	172	171	172	172	163	149	113	79
71	196	174	174	176	174	176	178	167	151	115	79
72	199	176	178	180	176	181	181	171	154	117	79
73	203	180	181	183	181	185	185	176	158	120	81
74	207	185	185	187	185	189	189	180	162	122	81
75	210	189	189	190	189	192	192	183	165	124	82
76	214	192	192	194	190	196	196	187	169	126	82
77	217	196	196	198	196	199	201	190	171	129	82
78	221	199	199	201	199	203	205	196	174	131	84
79	225	203	203	205	203	207	208	199	178	133	86
80	228	207	207	208	207	210	212	203	181	136	86
81	234	212	210	212	210	214	217	207	185	138	88
82	235	214	216	217	214	219	221	210	189	140	88
83	241	219	219	221	217	221	225	216	192	144	90
84	244	223	223	225	221	226	228	219	194	145	90
85	248	226	226	230	225	230	232	223	198	147	91
86	253	232	232	234	228	234	237	226	201	151	93
87	257	235	235	237	232	237	241	230	205	154	93
88	262	241	241	243	237	241	244	235	208	156	95
89	266	244	244	246	241	246	248	239	212	158	95
90	270	248	248	252	244	250	253	244	216	160	97
91	275	253	253	255	248	253	257	248	219	163	97

Time (min)	TC #239	TC #240	TC #241	TC #242	TC #243	TC #244	TC #245	TC #246	TC #247	TC #248	TC #249
92	279	257	257	261	253	259	262	252	223	165	99
93	284	262	262	266	257	261	266	257	226	169	100
94	289	266	266	270	223	266	270	261	230	171	171
95	297	271	318	275	226	361	369	264	234	174	172
96	277	277	282	279	230	388	518	270	237	221	172
97	282	280	311	750	234	432	572	273	241	225	176
98	289	288	378	761	338	561	748	277	244	226	275
99	295	291	496	793	619	538	880	282	248	232	293
100	300	297	426	817	541	473	610	286	252	235	327
101	403	302	446	842	520	522	826	700	255	342	324
102	415	307	302	858	547	408	792	720	259	349	322
103	810	313	369	867	574	565	811	658	261	448	311
104	837	318	307	874	567	468	822	673	266	473	151
105	871	324	741	887	520	716	676	540	268	795	255
106	891	329	534	900	523	640	743	619	271	709	117
107	898	334	819	457	421	763	955	662	275	838	117
108	914	340	856	558	424	828	939	741	394	864	120
109	925	667	788	748	412	855	921	775	392	856	316
110	937	592	822	514	437	797	990	829	415	853	172
111	837	437	905	514	554	824	982	730	421	873	325
112	873	363	842	694	621	802	1022	775	432	876	655
113	430	639	820	684	705	909	887	894	453	860	819
114	451	860	903	797	772	903	901	930	460	892	858
115	473	905	876	775	777	943	918	853	455	916	482
116	768	916	626	768	806	941	928	903	469	936	882
117	932	874	615	786	801	820	858	932	460	961	912
118	936	919	673	804	811	923	999	918	439	979	945
119	928	946	640	851	820	932	970	966	484	986	826
120	939	941	613	909	775	930	804	966	495	1006	934
121	905	964	610	959	745	682	847	991	522	1018	556
122	891	946	657	1015	919	864	864	954	520	1033	518
123	909	993	675	1042	795	1026	864	1031	478	1044	536
124	970	1017	712	1067	927	919	896	1040	541	1054	806
125	990	1062	685	1098	576	923	923	1054	522	1065	966
126	1004	1076	822	1119	545	950	936	1071	574	1078	909
127	1056	1087	820	1132	442	883	975	1083	550	1092	320
128	1076	1114	885	1141	412	903	982	1101	451	1107	293
129	1108	1141	887	1152	428	916	1002	1119	590	1125	277
130	1132	1153	921	1171	455	927	1047	1134	615	1134	316
131	1157	1170	984	1186	464	948	1126	1150	637	1144	309
132	1177	1182	1040	1189	406	925	1135	1162	597	1166	516
133	1202	1184	1047	1202	423	972	1139	1177	531	1177	621
134	1209	1200	1081	1198	432	988	1168	1189	617	1198	621
135	1225	1206	1123	1206	1022	986	1197	1202	509	1213	689
136	1242	1215	1159	1215	1036	925	1213	1216	477	1225	774
137	1261	1218	1193	1234	1051	979	1233	1229	657	1231	784

Time (min)	TC #239	TC #240	TC #241	TC #242	TC #243	TC #244	TC #245	TC #246	TC #247	TC #248	TC #249
138	1272	1224	1218	1245	1062	1026	1252	1240	550	1243	797
139	1281	1236	1236	1256	1078	1054	1270	1254	574	1256	799
140	1018	1238	1161	1063	1090	1036	1285	1216	615	1252	820
141	1301	1247	1265	864	1098	1148	1296	1272	642	1256	815
142	1305	1256	1116	903	795	984	1301	1188	743	1267	752
143	1314	1251	1247	1227	783	948	1317	1294	759	1179	763
144	1274	1146	1279	1135	770	952	1330	1308	788	819	824
145	1324	1170	1288	1240	900	804	1339	745	822	729	835
146	1234	936	1296	1067	768	635	1348	709	810	725	847
147	1353	952	1263	1065	822	720	1215	725	813	772	880
148	1326	853	844	1094	712	815	1171	752	856	750	880
149	968	930	1009	1110	745	923	1206	759	882	714	934
150	891	925	891	1036	763	716	1180	847	937	734	952
151	1044	923	833	1051	702	736	1040	802	946	730	950
152	957	957	831	1114	766	786	862	1105	1015	714	921
153	901	943	910	777	811	775	874	1137	991	739	927
154	918	844	955	808	770	792	972	873	1029	738	939
155	912	846	1098	835	732	745	943	1175	997	774	912
156	939	855	948	853	754	862	838	937	873	786	860
157	959	867	905	867	761	806	846	867	898	817	892
158	988	907	968	822	775	819	855	883	918	860	901
159	966	955	921	835	784	811	891	840	903	874	900
160	988	912	898	856	790	853	919	849	959	891	939
161	957	921	856	869	799	867	972	950	982	930	925
162	966	914	847	891	808	883	936	934	954	928	928
163	909	928	851	898	820	892	909	889	948	945	932
164	1080	795	869	885	835	896	874	909	993	880	937
165	991	939	894	997	847	878	939	885	986	916	937
166	1008	945	883	975	846	896	883	910	1038	954	955
167	1015	925	921	1029	855	918	923	966	1054	939	968
168	1092	941	883	981	873	937	973	919	1072	975	912
169	1074	921	883	1049	858	972	963	934	1105	991	961
170	1110	930	907	1065	869	1006	1004	1020	1117	934	1029
171	1132	916	898	1153	883	1022	995	1040	1123	927	1110
172	1157	878	891	1092	894	1036	1027	1121	1159	932	1153
173	1184	950	901	1078	905	1071	1035	1017	1179	941	1188
174	1197	887	916	1090	919	1107	1062	1044	1170	912	1159
175	1204	975	874	1089	986	1036	1112	1089	1177	959	1168
176	1233	970	867	1112	1018	1053	1143	1098	1188	999	1162
177	1240	1015	934	1108	977	1062	1166	1098	1188	1015	1170
178	1267	1044	950	1114	986	1090	1164	1116	1182	1078	1189
179	1278	1085	981	1121	982	1085	1161	1114	1179	1074	1114
180	1270	1121	1015	1134	1027	1076	1180	1188	1213	1152	1175
Max Temp:	1343	1194	1088	1207	1100	1149	1253	1261	1285	1224	1243
Max Allowed:	398	398	398	398	398	398	398	398	397	397	393

Time (min)	TC #250	TC #251	TC #252	TC #253	TC #254	TC #255	TC #256	TC #257	TC #258	TC #259	TC #260
0	70	70	72	72	72	73	73	73	73	73	73
1	70	70	72	72	72	73	73	73	73	73	73
2	70	70	72	72	72	73	73	73	73	73	73
3	70	70	72	72	73	73	73	73	73	73	73
4	70	70	72	72	72	73	73	73	73	73	73
5	70	70	72	72	72	73	73	73	73	73	73
6	73	68	72	73	73	72	73	73	73	73	73
7	70	70	72	72	72	73	73	73	73	73	73
8	70	70	72	72	72	73	73	73	73	73	73
9	70	70	72	72	72	73	73	73	73	73	73
10	70	70	72	72	72	73	73	73	73	73	73
11	70	70	72	72	73	73	73	73	73	73	73
12	70	70	72	72	73	73	73	73	73	73	73
13	70	70	72	72	72	73	73	73	73	73	73
14	70	70	72	72	73	72	73	73	73	73	73
15	70	70	72	72	73	73	73	73	73	73	73
16	68	70	72	72	73	73	73	73	73	73	73
17	70	70	72	72	72	73	73	73	73	73	73
18	70	70	72	72	72	73	73	73	73	73	75
19	70	70	72	72	73	73	73	73	73	73	73
20	70	70	72	73	72	73	73	73	73	73	73
21	70	70	72	72	73	73	73	73	73	73	73
22	70	70	72	72	73	73	73	73	73	75	75
23	70	70	72	72	72	73	73	73	73	75	73
24	70	70	72	72	73	73	73	73	73	73	73
25	70	70	72	72	72	73	73	73	73	75	73
26	70	70	72	72	72	73	73	75	75	75	75
27	70	72	70	72	73	73	73	75	75	75	75
28	70	70	72	72	73	73	73	73	75	75	75
29	70	70	72	73	73	73	73	73	75	75	75
30	70	70	72	73	73	73	73	73	75	77	75
31	70	70	72	73	73	75	75	75	77	77	77
32	70	70	72	73	75	73	75	75	75	77	77
33	70	72	72	73	75	75	75	77	75	79	77
34	70	72	72	73	75	75	77	75	77	79	79
35	70	72	73	75	75	75	77	77	79	79	79
36	70	72	73	75	75	77	77	77	79	81	79
37	70	72	73	75	75	77	77	79	79	81	81
38	70	72	73	75	77	79	79	79	81	82	82
39	70	72	73	75	77	79	79	79	81	82	82
40	70	72	75	77	77	79	81	81	82	84	84
41	72	72	75	77	79	81	81	81	82	86	84
42	70	73	77	77	79	81	81	82	84	86	86
43	70	73	77	79	81	82	82	82	86	88	88
44	72	73	77	81	81	82	82	84	86	90	90
45	72	75	77	81	82	84	84	86	88	91	90

Time (min)	TC #250	TC #251	TC #252	TC #253	TC #254	TC #255	TC #256	TC #257	TC #258	TC #259	TC #260
46	72	75	79	82	84	86	86	86	90	93	93
47	72	75	81	82	84	86	86	88	90	93	93
48	72	75	81	84	84	88	88	90	91	95	97
49	72	77	81	84	86	90	90	90	93	97	99
50	73	77	82	86	88	91	91	93	95	100	100
51	73	79	84	88	90	93	93	93	97	100	102
52	73	79	84	88	91	93	95	95	99	104	104
53	73	81	86	90	93	97	97	97	100	106	108
54	75	81	86	93	95	99	99	100	104	108	108
55	75	82	90	93	97	100	100	100	106	111	111
56	75	82	90	97	99	104	102	104	108	113	115
57	75	84	91	97	100	106	106	106	111	115	117
58	77	84	93	99	104	108	108	109	113	118	118
59	77	86	95	100	106	111	111	111	115	120	122
60	77	88	97	104	108	113	115	113	118	124	126
61	79	90	99	106	111	118	117	117	122	127	127
62	79	90	100	108	113	120	120	120	124	129	131
63	79	91	102	111	117	124	124	122	127	133	135
64	81	93	104	113	118	127	127	126	131	136	138
65	81	95	106	117	124	133	129	129	133	138	142
66	82	97	109	118	126	136	133	133	136	142	144
67	82	99	111	122	131	140	138	136	140	145	147
68	82	100	115	126	135	144	142	140	144	149	153
69	84	100	118	129	138	149	147	144	147	153	154
70	86	102	120	133	142	154	151	147	151	156	158
71	86	106	122	136	147	158	154	151	154	160	163
72	86	108	126	138	151	162	160	156	158	163	167
73	90	109	127	144	154	167	165	160	162	167	171
74	90	111	131	145	160	172	169	165	165	171	176
75	90	113	133	149	163	176	174	169	169	176	180
76	91	115	136	154	167	180	178	172	174	178	183
77	93	118	140	156	171	183	181	176	178	183	189
78	93	120	144	162	174	187	185	181	181	187	192
79	95	122	145	165	178	190	189	185	187	190	198
80	97	126	149	169	181	194	192	189	190	194	201
81	99	127	153	171	185	196	194	192	196	199	205
82	99	129	156	174	187	198	198	196	198	203	210
83	100	133	160	178	190	199	199	198	201	208	216
84	102	136	163	181	194	201	201	201	205	210	219
85	104	138	167	183	196	203	203	203	208	216	225
86	106	142	169	187	198	205	205	205	212	219	230
87	108	145	172	189	199	205	205	207	214	223	234
88	109	149	176	190	201	207	207	208	216	226	239
89	111	153	180	194	203	207	210	210	219	228	244
90	115	156	181	196	205	208	210	212	223	234	248
91	117	160	185	199	208	210	212	216	225	237	253

Time (min)	TC #250	TC #251	TC #252	TC #253	TC #254	TC #255	TC #256	TC #257	TC #258	TC #259	TC #260
92	118	163	187	201	208	210	214	217	228	241	261
93	120	165	189	205	210	212	216	219	232	244	264
94	122	169	192	207	214	216	219	223	234	248	270
95	126	171	194	208	216	217	221	225	237	252	275
96	127	172	196	210	217	221	225	228	241	255	282
97	129	176	199	214	221	225	226	232	244	261	288
98	131	178	201	216	225	226	230	235	248	264	293
99	133	180	205	219	226	230	234	237	252	268	298
100	135	181	207	223	230	234	237	241	255	273	306
101	136	183	208	226	234	237	241	244	259	277	311
102	138	185	212	228	239	241	244	250	262	280	316
103	140	187	216	232	241	244	248	252	266	286	324
104	140	190	217	235	244	248	252	257	270	289	331
105	142	190	221	237	248	252	255	259	273	295	338
106	144	192	223	241	252	255	259	262	279	298	342
107	144	194	226	244	255	259	262	266	282	304	349
108	145	198	230	248	259	262	266	271	286	307	356
109	145	198	232	252	261	266	271	275	289	313	365
110	147	201	235	255	266	270	275	279	293	316	370
111	147	201	237	257	270	271	279	282	297	322	379
112	149	203	241	261	273	277	282	286	302	327	387
113	149	205	244	264	277	280	286	289	306	331	396
114	151	208	248	268	280	284	289	293	309	336	403
115	151	210	250	271	284	288	293	297	313	342	412
116	153	212	253	277	289	291	298	300	316	345	419
117	153	214	257	279	293	295	302	304	322	351	428
118	154	216	259	282	297	300	306	307	325	356	435
119	154	219	264	288	300	304	309	313	329	361	442
120	156	221	268	291	304	306	313	316	334	367	450
121	156	223	271	295	309	311	316	320	338	370	457
122	158	226	275	300	313	315	322	325	342	376	464
123	158	228	279	304	316	318	325	329	345	381	469
124	160	232	284	309	322	322	329	333	351	387	478
125	162	234	288	313	325	325	333	336	354	392	486
126	163	237	293	318	331	331	338	342	358	397	493
127	165	241	298	324	334	334	342	345	363	403	500
128	165	244	304	329	340	338	345	349	367	408	509
129	167	248	309	334	345	342	349	352	372	415	516
130	169	253	315	342	351	345	354	358	378	421	525
131	171	257	320	347	356	351	358	361	381	428	532
132	172	262	327	354	360	354	361	365	387	432	540
133	174	266	334	361	367	360	365	370	392	439	550
134	176	271	342	367	370	363	370	374	396	444	558
135	180	277	347	374	378	367	374	378	399	450	565
136	183	282	354	383	383	372	379	383	405	457	572
137	187	288	361	390	388	376	383	387	410	462	579

Time (min)	TC #250	TC #251	TC #252	TC #253	TC #254	TC #255	TC #256	TC #257	TC #258	TC #259	TC #260
138	190	291	370	399	394	381	387	392	414	468	586
139	194	297	378	408	403	385	392	396	419	475	594
140	198	302	388	419	408	390	396	401	424	480	601
141	201	309	397	428	417	396	401	406	430	486	610
142	205	316	408	439	424	401	405	410	433	493	617
143	208	324	419	451	433	406	410	415	439	500	626
144	212	331	430	464	442	410	415	419	444	505	633
145	216	338	441	478	453	417	419	424	450	511	640
146	219	345	451	493	464	423	424	455	455	518	648
147	223	352	462	509	475	428	430	435	460	523	655
148	225	361	473	523	487	435	435	439	466	529	662
149	228	369	486	540	500	441	441	473	471	536	671
150	232	376	500	556	513	448	446	516	477	541	678
151	234	383	514	576	525	455	446	455	482	547	687
152	234	388	532	601	540	462	457	588	487	554	651
153	235	399	558	631	594	538	534	671	493	561	550
154	237	410	581	660	604	547	468	783	622	702	649
155	241	421	604	689	590	610	475	802	505	705	624
156	243	432	626	716	603	585	603	831	511	709	759
157	244	442	648	741	658	613	545	851	518	770	786
158	248	453	669	766	698	603	624	862	644	763	801
159	252	462	689	792	721	655	612	878	723	781	820
160	255	473	707	813	777	774	577	876	725	799	862
161	259	482	723	837	817	815	523	887	734	837	882
162	262	491	739	849	736	799	691	909	786	878	894
163	266	500	756	871	846	873	795	936	795	900	901
164	268	507	770	889	831	901	810	878	808	907	894
165	271	516	786	907	799	907	822	900	820	851	952
166	275	523	802	930	849	937	837	855	829	896	941
167	277	531	817	954	817	806	849	806	842	936	896
168	280	538	831	973	957	952	862	804	855	939	898
169	284	545	847	1000	930	831	876	815	867	930	829
170	286	552	867	1015	984	777	743	828	882	939	864
171	289	559	873	1029	1040	691	759	838	903	975	945
172	293	565	828	1040	1008	864	833	849	918	1008	991
173	297	572	833	1051	1072	943	910	858	925	979	855
174	298	577	840	1076	840	788	932	867	934	952	788
175	302	583	855	1089	795	826	991	874	934	928	774
176	304	590	860	1105	779	874	1035	885	959	1009	973
177	311	601	874	1112	801	873	1000	894	955	1069	849
178	320	608	858	1132	779	919	972	905	984	828	882
179	327	619	882	1150	766	1072	1108	925	921	840	961
180	352	635	928	1177	671	1071	909	993	923	837	941
Max Temp:	422	705	1000	1249	743	1144	982	1066	996	910	1014
Max Allowed:	395	395	397	397	397	398	398	398	398	398	398

Time (min)	TC #261	TC #262	TC #263	TC #264	TC #265	TC #266	TC #267	TC #268	TC #269	TC #270	TC #271
0	73	73	73	73	73	73	75	73	73	73	73
1	73	73	73	73	73	73	73	73	73	73	73
2	73	73	73	73	73	73	73	73	73	73	73
3	73	73	73	73	73	73	73	73	73	73	73
4	73	73	73	73	73	73	73	73	73	73	73
5	73	73	73	73	73	73	73	73	73	73	73
6	73	73	73	73	73	73	73	73	73	73	72
7	73	73	73	73	73	73	73	73	73	73	73
8	73	73	73	73	73	73	73	73	73	73	73
9	73	73	73	73	73	73	73	73	73	73	73
10	73	73	73	73	73	73	73	73	73	73	72
11	73	72	73	73	73	73	73	73	73	73	72
12	73	73	73	73	73	73	73	73	73	73	73
13	73	73	73	73	73	73	73	73	73	73	73
14	72	73	73	73	73	73	73	73	73	73	73
15	73	73	73	73	73	73	73	73	73	73	72
16	73	72	73	73	73	73	73	73	75	72	72
17	73	73	73	73	73	73	73	73	73	73	73
18	73	73	73	73	73	73	73	73	73	73	73
19	73	73	73	73	72	73	75	72	73	73	73
20	73	73	73	73	73	73	73	73	73	73	73
21	73	73	73	73	73	73	72	75	73	73	73
22	73	73	73	73	73	73	73	75	75	75	73
23	73	73	73	73	73	73	73	73	75	73	73
24	73	75	73	73	73	73	75	73	75	73	73
25	75	73	73	73	75	73	75	75	75	75	73
26	75	73	75	73	75	75	73	75	75	75	73
27	75	75	75	75	75	75	75	75	75	75	73
28	75	75	75	75	75	75	75	75	75	73	75
29	75	75	77	75	75	75	75	75	75	75	75
30	77	75	75	75	75	75	75	75	77	75	75
31	77	77	77	75	77	75	77	77	77	75	75
32	77	77	79	77	77	77	77	77	77	77	77
33	79	77	79	77	77	79	77	77	77	77	75
34	79	79	79	79	79	79	79	79	79	79	77
35	79	79	79	79	79	79	79	79	79	79	77
36	81	81	81	81	81	81	81	81	81	79	79
37	82	81	81	81	81	81	81	81	81	81	79
38	82	82	82	82	82	82	82	82	82	81	81
39	84	84	84	82	82	82	82	82	82	81	81
40	84	84	84	84	84	84	84	84	84	82	82
41	86	86	86	86	86	86	86	86	84	84	82
42	86	88	88	86	86	86	88	86	86	86	84
43	90	90	90	88	88	88	90	88	88	86	86
44	90	91	90	90	90	90	90	90	90	90	86
45	93	93	93	91	91	91	91	91	90	90	88

Time (min)	TC #261	TC #262	TC #263	TC #264	TC #265	TC #266	TC #267	TC #268	TC #269	TC #270	TC #271
46	93	95	95	93	93	93	93	93	93	91	90
47	95	97	97	95	95	95	95	95	93	93	91
48	97	99	99	97	97	97	97	97	97	95	93
49	100	100	100	99	99	100	100	99	99	97	95
50	102	104	102	100	100	102	102	100	100	99	97
51	104	106	106	104	104	104	104	102	102	100	100
52	106	108	108	106	106	108	108	106	104	104	102
53	109	111	111	108	108	109	109	108	108	106	104
54	111	115	113	111	111	111	111	111	109	108	108
55	115	118	117	113	113	115	113	113	113	111	108
56	118	120	118	117	117	118	118	117	113	115	111
57	120	124	122	118	118	120	120	118	118	117	115
58	124	127	126	122	122	124	124	122	120	120	117
59	126	131	129	126	126	127	126	126	124	122	120
60	129	133	133	129	129	129	129	127	127	126	122
61	133	136	136	133	133	133	133	131	129	129	126
62	136	140	138	135	135	136	135	133	133	133	129
63	140	145	144	138	138	140	138	136	136	135	133
64	144	149	145	142	142	144	142	140	140	138	136
65	147	153	151	145	145	147	145	144	144	142	140
66	151	158	154	149	149	151	149	147	147	145	144
67	154	162	158	154	153	154	153	151	149	149	147
68	158	167	162	158	156	158	156	154	153	153	149
69	163	171	167	162	160	160	160	158	156	156	154
70	167	176	171	165	162	163	162	160	160	160	158
71	172	181	176	169	167	169	167	165	163	163	162
72	176	185	180	172	171	171	169	167	167	167	165
73	181	192	185	178	174	174	172	172	171	171	169
74	187	198	190	181	180	178	176	174	174	174	172
75	190	203	194	185	183	181	180	178	178	178	176
76	196	210	199	190	187	185	183	183	181	181	180
77	201	216	205	194	190	189	187	185	185	185	183
78	207	223	210	199	194	192	190	190	189	190	187
79	212	230	217	203	199	198	196	194	192	194	192
80	219	237	223	208	203	201	199	198	196	198	196
81	225	244	228	212	207	205	203	201	201	201	199
82	230	253	234	217	212	210	207	205	203	205	205
83	237	262	241	223	216	214	212	208	208	208	207
84	243	270	248	228	219	219	216	214	212	212	212
85	248	279	255	234	225	223	219	217	216	217	216
86	257	288	262	237	230	226	223	221	219	221	219
87	262	297	270	244	234	232	228	225	225	225	225
88	270	307	277	250	239	237	232	230	228	230	228
89	277	316	284	255	243	241	237	234	232	234	232
90	284	327	293	262	250	246	241	239	235	237	235
91	291	338	302	268	253	252	246	243	241	241	241

Time (min)	TC #261	TC #262	TC #263	TC #264	TC #265	TC #266	TC #267	TC #268	TC #269	TC #270	TC #271
92	300	351	309	273	259	257	250	248	244	246	244
93	307	361	318	280	264	261	255	252	248	250	250
94	316	374	329	288	270	266	261	257	253	253	253
95	324	387	338	293	275	270	264	261	257	259	257
96	333	399	349	300	280	275	270	266	261	262	261
97	343	412	358	307	286	280	273	271	266	266	266
98	352	426	369	313	289	286	279	275	270	271	270
99	361	441	379	320	295	291	284	280	273	275	275
100	372	455	390	327	302	295	288	286	279	280	279
101	381	469	403	334	307	300	293	291	284	284	282
102	392	484	414	342	311	306	298	295	288	288	288
103	403	500	428	349	318	311	304	300	293	293	291
104	414	518	439	356	469	316	601	306	297	297	295
105	424	538	451	421	504	322	608	313	298	302	300
106	435	561	464	432	599	327	577	316	304	306	304
107	448	586	478	705	705	333	635	403	309	441	309
108	460	615	491	714	469	338	676	361	313	437	435
109	475	642	500	678	606	343	694	502	354	522	405
110	489	673	514	736	653	360	720	702	352	513	322
111	505	700	592	759	675	403	754	734	453	675	433
112	520	725	586	784	716	430	768	763	480	759	518
113	536	747	586	801	712	439	781	788	716	786	671
114	550	770	613	820	781	462	801	797	756	811	766
115	565	793	655	840	802	453	838	822	766	828	790
116	579	813	676	862	819	648	849	765	801	862	718
117	594	831	669	883	840	783	835	849	828	878	684
118	606	849	747	896	860	775	829	864	844	831	838
119	619	864	799	912	820	743	801	878	855	838	867
120	631	880	775	941	856	793	810	891	896	925	786
121	644	896	745	945	873	815	810	910	885	927	802
122	653	914	757	946	880	783	810	927	873	936	817
123	664	930	738	955	892	842	864	941	882	945	811
124	676	950	750	975	919	694	925	957	907	930	831
125	689	970	754	997	970	716	936	972	853	986	846
126	702	984	774	1013	921	738	894	981	849	1002	847
127	714	995	784	1044	925	743	898	991	867	1038	846
128	741	939	804	1067	901	786	892	1008	864	1029	892
129	754	943	828	1078	959	716	957	1022	894	1067	829
130	763	970	826	1089	963	734	982	1031	918	1067	936
131	777	963	835	1101	964	763	988	1040	943	1072	999
132	788	972	838	1108	973	772	939	1063	955	1076	954
133	786	1026	846	1031	892	783	1060	1022	972	1013	1004
134	770	855	858	955	837	774	1054	1067	959	838	984
135	779	871	871	1067	907	793	1058	1094	1040	799	948
136	774	810	874	1011	820	822	1071	1112	1004	864	990
137	779	801	880	954	826	788	1047	1067	997	898	970

Time (min)	TC #261	TC #262	TC #263	TC #264	TC #265	TC #266	TC #267	TC #268	TC #269	TC #270	TC #271
138	801	864	894	1072	842	901	1085	1020	1006	822	999
139	804	851	907	1035	838	867	1103	1006	982	851	1006
140	819	997	943	1033	759	871	1090	952	1065	865	963
141	817	878	936	952	766	910	1126	970	932	887	986
142	835	871	925	1022	783	892	1085	869	1038	932	972
143	846	878	937	1096	802	849	918	901	1051	930	1065
144	855	885	957	1049	806	930	801	774	1054	950	1038
145	856	750	979	1027	880	963	792	797	964	1022	1060
146	865	903	1065	1141	775	910	921	849	907	1056	1071
147	838	750	1094	986	808	833	966	824	918	898	1087
148	837	747	1108	1031	815	910	979	833	1002	862	1098
149	878	963	1116	1137	842	1049	1022	1089	1085	860	1011
150	878	1002	1121	981	865	743	959	961	1134	900	1103
151	925	770	1119	1153	1071	727	847	1020	1119	802	1033
152	936	763	1114	1200	653	900	833	1020	1114	716	1045
153	871	963	1112	1017	655	914	842	1051	1132	883	997
154	878	707	1099	1209	675	930	945	1108	1150	1065	982
155	891	894	1090	1177	696	930	880	1157	1144	876	1038
156	810	952	1092	1125	718	829	820	1117	856	828	1035
157	1033	988	1096	1218	741	1062	840	1103	966	820	1049
158	1044	955	1098	1085	752	876	921	1119	907	874	835
159	824	730	972	1058	702	777	754	1040	811	795	856
160	851	700	1031	1155	802	846	756	1069	831	811	916
161	844	707	925	1029	817	928	777	1036	847	833	907
162	939	729	864	1053	757	754	813	846	865	849	914
163	939	896	919	1134	912	946	858	1029	882	1065	993
164	952	923	862	1045	914	761	824	815	898	977	939
165	1018	945	887	1098	1002	948	1195	817	1020	991	964
166	1008	905	1011	1047	1085	741	1153	898	1011	993	1002
167	1045	984	1018	1170	1026	900	972	916	1018	1004	986
168	982	1004	1049	1161	1078	837	973	1062	1029	1062	977
169	1000	988	905	957	945	883	963	988	1026	1011	1011
170	943	1038	1015	948	1083	853	988	982	1081	1008	999
171	970	955	1000	887	1000	768	972	970	1071	1015	1011
172	910	1031	1017	1099	736	718	1002	973	1107	1069	993
173	894	923	1036	1044	883	820	1134	988	1119	1128	1067
174	900	790	972	1040	963	846	1040	986	1080	1108	1062
175	811	624	986	1141	676	777	1031	991	1018	1099	1069
176	711	693	1036	972	756	783	955	901	1031	1027	1058
177	795	799	961	799	810	757	968	891	1101	1045	883
178	820	802	1038	752	880	856	914	1051	1125	1033	1053
179	964	835	851	795	736	819	930	993	1161	1081	1092
180	873	811	1067	806	750	846	1000	923	1188	995	1011
Max Temp:	946	884	1140	879	823	919	1075	996	1261	1068	1084
Max Allowed:	398	398	398	398	398	398	400	398	398	398	398

Time (min)	TC #272	TC #273	TC #274	TC #275	TC #276	TC #277	TC #278	TC #279	TC #280	TC #281	TC #282
0	72	72	70	68	68	70	70	72	72	72	72
1	72	72	70	68	68	70	70	72	72	72	72
2	72	72	70	68	68	70	70	72	72	72	72
3	72	72	70	68	68	70	70	72	72	72	72
4	72	72	70	68	68	70	70	72	72	72	72
5	72	72	70	68	68	70	70	72	72	72	72
6	72	72	72	68	68	70	72	72	75	70	72
7	72	72	70	68	68	70	70	72	72	72	72
8	72	72	70	68	68	70	70	72	72	72	72
9	72	72	70	68	68	68	70	72	72	72	72
10	72	72	70	68	66	70	70	72	72	72	72
11	72	72	70	68	68	70	70	72	72	72	72
12	72	72	70	68	68	68	70	72	72	72	72
13	72	72	70	68	68	70	70	72	72	72	72
14	72	72	70	68	68	70	70	72	72	72	72
15	72	72	70	68	66	70	70	72	72	72	72
16	72	72	70	68	66	70	70	72	72	72	72
17	72	72	70	68	66	70	70	72	72	72	72
18	72	70	70	68	68	70	70	72	72	72	72
19	72	72	70	68	68	68	72	72	72	72	72
20	72	72	70	68	68	70	72	72	73	72	72
21	72	72	70	68	68	70	72	72	72	72	73
22	72	72	70	66	68	70	72	72	72	72	73
23	72	72	70	68	68	68	72	72	72	72	73
24	72	72	70	68	68	70	72	72	73	72	73
25	72	72	70	68	68	70	72	73	73	72	73
26	73	72	70	68	68	70	72	73	73	72	73
27	73	72	70	68	68	70	72	73	73	73	73
28	72	72	70	68	68	70	72	73	73	73	75
29	73	72	70	68	68	70	73	73	73	73	73
30	73	72	70	68	68	72	73	73	75	73	75
31	75	72	70	68	68	70	73	75	75	73	75
32	73	73	70	68	68	72	73	75	75	75	75
33	75	73	72	68	68	72	75	75	75	75	75
34	75	73	72	68	68	72	75	77	77	75	77
35	75	73	72	68	68	72	75	77	77	75	77
36	77	73	72	68	68	72	77	79	77	77	79
37	77	75	72	68	68	73	77	79	79	79	79
38	77	75	72	68	68	73	79	81	79	79	81
39	79	75	72	68	68	73	79	81	79	79	81
40	79	77	72	68	68	73	79	82	81	81	82
41	81	77	73	68	68	73	81	82	82	81	82
42	81	77	73	68	68	75	82	84	82	82	84
43	82	79	73	70	68	75	82	84	82	82	86
44	84	79	73	70	70	75	84	86	84	84	88
45	84	81	73	70	68	77	86	88	86	86	88

Time (min)	TC #272	TC #273	TC #274	TC #275	TC #276	TC #277	TC #278	TC #279	TC #280	TC #281	TC #282
46	86	81	75	70	70	77	86	90	88	86	90
47	88	82	77	70	70	77	88	90	90	88	91
48	90	82	75	70	70	79	90	91	90	90	93
49	90	84	77	70	70	79	90	93	91	91	95
50	91	86	79	70	70	81	91	95	93	91	97
51	93	86	79	72	70	81	93	97	95	93	99
52	97	88	81	72	72	81	95	99	99	95	100
53	99	90	81	72	72	82	97	100	100	97	102
54	100	91	82	72	72	84	99	102	102	100	104
55	102	93	82	73	72	86	100	104	104	102	108
56	104	95	84	73	72	86	102	108	106	104	111
57	108	97	84	75	72	88	104	109	108	106	115
58	109	99	86	73	72	88	106	111	111	109	118
59	111	100	88	75	73	90	108	113	113	111	122
60	115	102	90	75	73	91	109	117	115	115	126
61	117	104	90	75	73	91	111	118	118	118	127
62	120	106	91	77	75	93	113	120	120	122	131
63	122	109	93	79	75	95	117	124	124	124	135
64	126	111	95	79	75	95	118	126	126	127	138
65	129	115	97	79	75	97	120	127	129	131	142
66	133	117	99	79	77	99	124	131	133	135	145
67	136	118	100	81	77	100	124	135	135	138	149
68	138	122	100	82	77	102	126	136	138	140	153
69	142	126	104	82	79	104	129	138	142	144	156
70	145	127	104	82	79	104	131	142	144	147	160
71	149	129	106	84	79	106	135	145	147	149	162
72	153	133	109	84	81	108	136	147	151	153	165
73	156	136	109	86	81	111	138	151	154	154	167
74	160	138	113	86	82	111	142	153	156	158	171
75	163	142	115	88	82	113	144	156	160	160	172
76	167	144	117	88	82	115	147	160	163	163	176
77	171	147	118	90	84	117	149	162	165	167	178
78	174	151	120	91	86	118	151	165	169	169	180
79	178	153	122	93	86	120	154	169	172	172	181
80	181	156	126	93	86	122	156	171	174	174	183
81	185	160	126	95	88	124	158	174	178	178	185
82	189	162	129	95	88	126	162	176	181	180	187
83	192	165	131	97	90	129	163	180	183	183	189
84	198	169	135	97	90	129	167	181	187	185	190
85	201	172	136	99	91	131	169	185	190	189	194
86	205	174	138	100	93	133	172	189	194	192	196
87	208	178	140	102	93	136	174	190	198	194	198
88	212	181	144	102	93	136	176	194	199	198	201
89	216	185	145	104	95	140	180	198	203	201	205
90	219	187	147	106	97	140	181	201	207	205	208
91	225	190	151	108	97	144	185	203	208	207	210

Time (min)	TC #272	TC #273	TC #274	TC #275	TC #276	TC #277	TC #278	TC #279	TC #280	TC #281	TC #282
92	228	194	153	108	97	145	187	207	212	210	214
93	232	198	154	111	99	147	190	208	216	214	216
94	235	201	156	111	100	149	192	212	217	216	219
95	241	205	160	113	100	151	196	216	221	219	223
96	244	208	162	115	102	153	198	217	225	223	225
97	248	212	165	115	104	154	199	221	228	226	228
98	252	216	167	117	104	156	203	225	232	228	232
99	257	217	169	118	106	158	205	228	235	232	235
100	261	221	172	118	106	160	208	230	237	235	239
101	266	225	174	120	108	163	210	234	241	237	243
102	270	228	176	122	108	165	214	237	244	241	246
103	273	230	180	122	109	167	216	239	248	244	248
104	277	622	181	124	111	169	219	243	252	248	252
105	286	644	185	126	111	171	221	246	255	252	255
106	289	666	187	127	113	171	223	250	259	253	259
107	293	684	190	655	115	174	226	252	262	257	262
108	298	648	192	653	115	176	228	255	266	261	266
109	298	653	194	716	117	178	232	259	268	264	270
110	302	545	230	723	118	180	234	262	271	266	273
111	304	705	232	736	118	181	237	266	275	270	277
112	311	727	237	752	120	183	239	268	280	273	280
113	316	763	356	781	122	187	241	271	284	277	286
114	320	725	801	806	122	187	244	275	288	280	288
115	862	806	408	824	124	190	246	277	291	282	291
116	882	808	727	797	124	192	250	280	295	286	295
117	898	811	702	840	126	194	252	284	298	288	298
118	896	838	838	851	127	196	255	288	302	293	302
119	928	885	871	846	129	198	259	291	306	295	306
120	950	912	916	871	129	199	262	295	309	298	309
121	957	896	943	786	131	203	268	298	315	302	313
122	536	889	968	934	131	205	275	306	318	306	316
123	790	894	937	943	133	208	282	311	322	309	320
124	871	914	927	957	135	212	291	318	327	313	325
125	790	934	910	966	136	217	300	325	331	316	329
126	743	882	997	954	136	223	309	334	336	320	333
127	712	901	1029	986	138	226	318	343	342	324	338
128	736	986	1054	1045	140	230	325	352	345	327	342
129	741	954	1026	975	142	234	333	360	351	333	347
130	846	961	1029	986	142	237	340	369	354	336	351
131	790	970	1056	986	144	241	345	379	361	340	354
132	747	1026	1038	914	145	243	352	388	367	343	360
133	705	1009	1047	865	149	246	358	397	372	349	363
134	824	975	1027	995	149	248	361	406	378	352	369
135	831	963	1062	1081	151	252	367	414	383	356	374
136	817	858	1080	1125	153	253	370	423	390	361	378
137	900	928	1125	1128	154	255	374	432	396	365	383

Time (min)	TC #272	TC #273	TC #274	TC #275	TC #276	TC #277	TC #278	TC #279	TC #280	TC #281	TC #282
138	865	979	1128	1170	156	257	378	437	403	370	388
139	905	1013	1027	1188	158	259	379	444	408	374	392
140	912	1036	991	1134	160	262	383	451	414	379	399
141	840	1044	1009	1222	162	262	385	459	421	385	405
142	811	1040	1049	1180	163	264	388	468	428	390	414
143	811	1063	1087	1247	165	266	394	477	435	396	417
144	790	1090	1069	1265	167	270	399	487	442	392	424
145	799	1105	1108	1274	169	271	405	496	450	397	428
146	846	1105	1108	1281	169	273	410	507	459	410	433
147	846	1126	1090	1287	171	277	415	518	466	408	442
148	835	1141	1143	1297	172	279	421	527	473	415	464
149	828	1152	1094	1314	174	282	426	534	480	423	462
150	702	1162	1162	1018	176	284	430	540	547	590	457
151	729	1179	1121	777	178	288	433	543	547	588	507
152	743	1189	1193	948	180	289	437	547	639	552	504
153	763	1191	1251	1008	180	293	439	550	549	595	513
154	770	1202	999	1022	181	295	441	554	617	579	520
155	788	1211	1029	909	185	297	442	556	568	606	518
156	851	1260	754	903	185	298	444	559	543	622	523
157	858	1263	752	1060	187	300	446	563	597	603	507
158	826	1251	691	1044	189	302	446	568	563	579	513
159	846	1258	743	1035	190	304	448	572	599	597	565
160	752	1267	720	979	190	306	450	576	604	621	520
161	817	1270	1089	1040	194	306	451	579	608	574	523
162	885	1164	876	1078	194	307	451	583	606	568	563
163	756	1215	860	1222	196	309	453	586	610	576	658
164	862	941	815	1272	198	311	455	588	608	604	599
165	903	1089	757	1065	199	313	457	592	590	554	599
166	946	1245	808	1069	201	313	457	594	615	592	637
167	968	1087	790	1202	201	315	459	597	626	624	642
168	986	1126	795	1249	203	316	460	601	628	628	590
169	1000	963	822	1105	203	316	462	603	635	630	617
170	1051	1040	876	999	205	318	464	606	640	621	608
171	984	1011	844	979	207	320	464	610	649	635	601
172	900	1033	860	918	207	320	466	613	648	637	615
173	891	1108	887	934	208	322	468	617	653	640	653
174	874	1092	891	919	208	322	469	621	658	646	644
175	919	806	932	1031	210	324	471	624	662	646	630
176	991	990	937	952	210	324	471	626	671	653	619
177	990	995	990	1009	212	325	473	630	671	657	662
178	943	1045	941	990	214	327	475	633	680	669	657
179	903	1081	957	1114	214	327	477	637	678	662	694
180	923	1096	954	1128	216	329	478	640	684	660	693
Max Temp:	995	1168	1024	1196	284	399	548	712	756	732	765
Max Allowed:	397	397	395	393	393	395	395	397	397	397	397

Time (min)	TC #283	TC #284	TC #285	TC #286	TC #287	TC #288	TC #289	TC #290	TC #291	TC #292	TC #293
0	72	72	72	72	73	72	73	73	72	72	72
1	72	72	72	73	73	72	73	73	73	72	72
2	72	72	72	72	73	73	73	73	72	72	72
3	72	72	72	72	73	73	73	73	72	72	72
4	72	72	73	72	72	73	73	73	72	72	72
5	72	72	72	73	72	72	73	73	72	72	72
6	73	73	72	73	73	73	73	73	72	72	72
7	72	72	73	73	73	73	73	73	72	72	72
8	72	72	72	73	73	72	72	72	72	72	72
9	72	72	72	72	73	73	73	73	73	72	73
10	72	72	73	72	72	73	73	73	72	72	72
11	72	72	72	72	73	73	72	73	72	72	72
12	72	72	72	72	73	73	73	72	73	72	72
13	72	72	72	72	73	73	73	73	72	72	73
14	72	72	72	73	73	72	73	73	72	72	72
15	72	73	73	72	73	73	73	73	72	73	73
16	72	72	72	72	73	73	73	73	72	72	72
17	72	72	73	73	73	73	73	73	72	73	72
18	72	73	73	73	73	73	73	75	72	72	73
19	72	73	73	73	73	73	73	73	72	73	73
20	73	73	73	73	73	75	73	73	73	73	73
21	72	73	73	73	73	75	73	73	73	73	73
22	72	73	73	73	73	75	75	75	73	73	73
23	72	73	75	75	75	75	75	75	73	73	73
24	73	73	75	75	75	75	75	75	73	73	73
25	73	73	75	75	75	77	77	75	75	73	73
26	73	73	75	75	77	77	77	75	75	73	75
27	73	75	75	77	77	79	77	77	75	73	75
28	73	75	75	77	77	81	79	77	75	75	75
29	75	75	77	77	79	81	79	77	77	75	77
30	75	77	77	79	79	82	81	79	77	75	75
31	75	77	77	79	81	84	81	79	77	75	77
32	75	77	79	81	81	84	82	79	79	75	79
33	77	77	79	81	84	86	82	79	79	77	79
34	77	79	81	82	82	88	84	82	79	77	81
35	77	79	81	82	84	91	86	82	79	77	81
36	79	79	82	84	86	91	88	82	81	79	81
37	79	81	82	86	88	93	90	84	82	79	84
38	81	82	84	86	90	97	90	86	82	81	84
39	81	82	86	88	90	99	93	88	84	81	86
40	82	84	86	90	91	100	93	90	84	82	86
41	82	86	88	90	93	104	97	90	86	82	88
42	84	86	90	91	95	106	97	91	88	84	90
43	86	88	91	93	97	108	100	93	88	86	91
44	86	90	91	95	100	111	102	95	90	86	93
45	88	90	93	97	102	113	104	97	91	88	95

Time (min)	TC #283	TC #284	TC #285	TC #286	TC #287	TC #288	TC #289	TC #290	TC #291	TC #292	TC #293
46	90	93	95	100	104	115	108	99	93	90	97
47	90	93	97	100	106	118	109	100	95	91	99
48	93	95	100	102	109	120	111	102	97	93	100
49	93	99	102	106	111	124	115	106	99	95	102
50	95	102	104	108	115	126	117	108	100	97	104
51	97	106	108	111	117	129	118	109	104	99	108
52	100	109	109	113	118	133	122	111	104	100	109
53	102	115	113	117	122	136	126	115	108	104	111
54	108	118	117	118	126	140	127	117	109	106	115
55	109	122	120	122	127	144	131	120	113	108	117
56	115	126	124	126	131	147	133	122	115	111	118
57	118	131	127	129	135	149	136	126	118	113	122
58	122	135	131	131	138	153	140	127	120	115	124
59	126	140	135	136	142	156	144	131	122	118	127
60	129	144	138	138	144	160	145	135	126	120	131
61	133	149	142	142	147	163	149	136	129	124	133
62	136	153	145	145	151	167	153	140	131	126	136
63	142	156	151	149	154	171	154	144	135	129	140
64	145	160	154	153	158	174	160	145	136	133	142
65	149	165	158	156	162	178	162	149	140	136	145
66	153	169	162	160	165	181	165	153	144	138	147
67	156	172	165	163	169	185	169	156	147	142	153
68	160	176	169	167	172	190	171	160	151	145	154
69	163	178	174	171	176	194	174	162	154	147	158
70	167	181	178	174	180	199	176	165	156	151	162
71	169	183	181	178	181	203	180	169	160	154	165
72	172	185	185	181	187	208	181	172	163	158	169
73	176	187	187	185	190	212	185	176	165	162	171
74	178	189	190	189	194	217	187	180	171	165	176
75	180	190	192	192	198	223	190	181	172	169	180
76	183	192	196	196	201	228	196	185	176	172	183
77	185	194	198	198	205	234	201	189	180	174	185
78	187	194	198	201	210	241	205	192	183	178	189
79	187	196	199	203	214	248	208	196	187	183	194
80	189	196	201	207	217	253	214	199	190	185	196
81	190	198	201	210	221	262	219	203	194	189	201
82	192	198	203	214	226	270	223	207	198	194	205
83	192	198	203	217	230	277	228	210	201	198	208
84	194	199	205	221	234	286	232	216	205	201	212
85	194	201	207	223	239	295	237	219	208	205	216
86	196	201	208	226	244	304	243	225	212	208	219
87	196	201	212	230	248	313	248	228	216	212	223
88	196	203	216	234	253	322	253	232	219	217	228
89	196	205	219	237	259	331	259	237	225	221	232
90	198	207	223	241	262	342	264	241	228	226	237
91	201	210	228	244	268	352	270	244	232	230	241

Time (min)	TC #283	TC #284	TC #285	TC #286	TC #287	TC #288	TC #289	TC #290	TC #291	TC #292	TC #293
92	205	214	230	248	273	361	275	250	237	234	246
93	208	219	235	252	279	374	280	255	239	237	252
94	214	225	239	257	284	385	288	259	244	243	255
95	217	228	243	261	289	396	293	264	248	246	261
96	221	232	246	264	297	406	298	268	252	252	266
97	225	237	250	268	302	417	306	273	257	257	271
98	230	241	253	273	307	428	311	279	261	261	277
99	234	246	257	277	315	439	318	282	266	266	282
100	237	252	261	282	320	451	324	288	270	271	367
101	241	255	266	286	327	462	331	291	273	277	298
102	244	261	270	291	334	473	338	297	279	280	403
103	248	264	273	295	340	484	345	302	282	286	403
104	253	268	277	300	347	495	352	307	288	291	444
105	257	273	282	304	352	507	419	313	599	297	448
106	261	279	286	309	360	536	459	316	568	302	459
107	264	282	289	313	365	552	475	322	568	307	432
108	268	288	293	318	372	534	435	327	446	313	595
109	271	291	298	324	379	550	480	334	658	320	469
110	275	297	302	327	387	572	412	338	316	325	424
111	279	300	306	333	394	576	414	343	322	331	651
112	284	306	311	338	403	588	430	370	327	336	657
113	288	311	316	342	408	599	509	349	666	421	646
114	289	315	320	349	417	612	685	403	590	586	730
115	295	320	325	354	424	622	549	469	568	592	745
116	298	324	331	360	433	640	610	493	698	752	752
117	302	331	336	365	441	648	669	500	689	689	709
118	306	334	342	370	450	666	707	513	613	763	532
119	309	340	347	376	457	662	649	527	736	579	534
120	315	343	352	381	466	680	662	531	799	718	534
121	318	349	356	388	475	685	698	459	808	622	444
122	322	354	363	394	484	691	703	482	810	765	471
123	325	360	369	401	493	700	734	446	673	707	514
124	331	365	374	408	500	711	662	594	433	721	801
125	334	370	381	414	511	721	666	520	615	797	799
126	340	376	387	421	520	781	698	448	606	752	802
127	343	383	394	428	529	810	738	590	430	752	865
128	349	388	401	437	540	828	705	720	586	711	844
129	354	396	406	444	549	844	723	707	439	651	856
130	358	401	414	453	559	851	720	727	507	721	860
131	363	406	421	460	568	867	721	795	511	730	869
132	367	414	428	468	579	874	721	797	531	815	891
133	372	419	437	477	590	804	738	810	741	837	867
134	378	426	444	486	603	808	644	804	662	792	838
135	383	433	451	495	613	903	657	851	493	811	894
136	388	439	460	504	626	878	766	811	696	934	842
137	394	446	468	513	639	928	763	876	783	910	856

Time (min)	TC #283	TC #284	TC #285	TC #286	TC #287	TC #288	TC #289	TC #290	TC #291	TC #292	TC #293
138	399	453	477	522	649	937	838	903	777	833	873
139	410	460	486	531	662	948	774	860	784	847	824
140	414	468	495	540	675	959	754	939	810	907	792
141	428	475	504	550	687	966	849	838	824	909	743
142	435	482	513	561	700	973	781	900	757	864	824
143	444	491	522	570	653	984	849	725	793	855	765
144	450	498	531	581	655	997	858	739	813	858	756
145	457	507	540	592	660	1006	858	678	829	820	696
146	466	514	550	604	666	1009	876	664	849	831	858
147	471	522	561	678	718	975	829	619	869	826	817
148	475	531	570	705	651	972	876	671	871	849	770
149	766	540	581	682	705	889	822	720	910	876	817
150	752	549	592	653	709	963	925	640	817	799	907
151	723	556	604	648	801	885	790	594	784	793	759
152	721	565	613	660	700	822	810	621	671	743	824
153	712	576	628	640	748	952	716	669	680	721	883
154	711	585	603	642	745	918	739	689	682	756	925
155	707	594	615	666	738	916	847	718	702	727	871
156	702	603	639	676	732	923	909	756	727	828	709
157	696	613	637	738	738	819	907	766	694	792	723
158	698	622	669	705	734	910	846	788	694	846	711
159	696	633	685	694	720	882	864	792	738	770	721
160	700	619	698	599	604	856	910	777	860	874	828
161	702	630	702	649	570	817	909	754	905	934	858
162	698	635	725	684	628	838	849	721	750	941	844
163	698	630	738	694	716	914	828	721	860	921	867
164	696	669	707	696	732	898	849	709	768	867	871
165	694	667	676	689	738	873	808	691	876	838	901
166	705	676	793	720	754	871	820	720	804	811	867
167	707	748	676	741	754	849	842	738	808	743	822
168	707	720	664	736	730	860	856	730	793	779	651
169	709	752	747	714	754	786	844	720	883	754	684
170	698	748	721	691	768	763	741	747	828	700	725
171	700	725	763	723	784	747	684	739	856	727	655
172	689	702	723	705	770	835	687	739	979	738	745
173	700	786	673	747	826	804	675	712	934	669	725
174	691	793	669	763	729	824	682	712	770	655	682
175	689	792	689	774	730	709	648	718	790	678	689
176	691	743	730	766	766	754	662	732	768	689	696
177	698	811	720	788	862	781	684	730	739	709	700
178	730	788	730	806	784	734	698	730	752	721	709
179	734	750	750	820	766	732	730	750	707	759	721
180	721	750	734	781	788	736	739	738	711	763	711
Max Temp:	793	822	806	853	861	808	812	811	783	835	783
Max Allowed:	397	397	397	397	398	397	398	398	397	397	397

Time (min)	TC #294	TC #295	TC #296	TC #297	TC #298	TC #299	TC #300
0	72	72	72	73	72	72	72
1	72	72	72	72	73	72	72
2	72	72	72	72	72	72	72
3	72	72	72	73	72	72	72
4	72	72	72	72	72	72	72
5	72	72	72	72	72	72	72
6	72	72	72	72	73	72	73
7	72	73	72	72	72	72	72
8	72	72	72	72	72	72	72
9	72	73	72	72	72	72	72
10	72	72	72	72	72	72	72
11	72	72	72	72	73	72	72
12	72	73	73	73	72	72	72
13	73	73	73	72	73	73	72
14	72	72	72	73	72	72	72
15	73	72	72	73	72	72	72
16	73	72	73	73	73	73	72
17	73	73	72	73	72	72	72
18	73	73	73	73	73	72	72
19	73	72	73	73	72	73	73
20	75	73	73	73	73	73	72
21	75	73	73	72	73	73	72
22	75	73	73	73	73	73	73
23	75	73	73	73	73	73	72
24	77	73	73	73	73	73	73
25	77	75	73	73	73	73	73
26	77	75	75	73	75	73	73
27	79	75	75	75	75	73	73
28	79	75	75	75	75	75	73
29	81	75	75	75	75	75	75
30	81	77	75	75	75	75	75
31	81	77	75	77	77	75	75
32	82	79	77	77	77	77	75
33	84	79	79	77	77	77	75
34	86	79	79	79	79	77	77
35	86	81	79	79	79	79	77
36	88	81	79	81	79	79	77
37	90	82	81	82	81	81	79
38	91	84	82	82	82	81	79
39	93	84	82	82	82	82	81
40	95	86	84	84	84	82	81
41	97	88	86	86	84	84	82
42	100	90	86	88	86	84	84
43	102	90	88	88	88	86	86
44	104	93	90	90	90	88	86
45	106	95	90	91	90	88	88

Time (min)	TC #294	TC #295	TC #296	TC #297	TC #298	TC #299	TC #300
46	108	95	93	93	91	90	90
47	111	99	93	95	93	91	91
48	113	100	95	97	95	93	93
49	115	102	99	99	97	95	93
50	118	104	99	100	99	97	95
51	120	106	102	102	100	99	97
52	124	108	104	104	102	100	100
53	126	111	106	108	104	102	102
54	129	113	108	109	108	104	104
55	133	115	109	111	109	108	106
56	135	118	113	115	111	108	108
57	136	120	115	117	113	111	111
58	140	122	118	118	117	115	113
59	144	126	120	122	120	117	115
60	147	129	122	124	120	118	118
61	151	131	126	127	124	122	120
62	153	133	129	129	126	124	124
63	156	136	131	133	129	127	126
64	160	140	135	135	133	131	129
65	162	142	136	138	135	133	131
66	165	145	140	142	138	136	135
67	169	147	144	144	142	140	138
68	172	153	147	147	145	144	140
69	176	154	149	151	147	145	144
70	180	158	153	154	151	149	145
71	181	162	156	158	154	151	149
72	185	165	158	160	156	154	153
73	189	167	162	163	160	158	154
74	192	172	165	167	162	160	158
75	196	174	169	171	165	163	162
76	199	178	172	174	169	165	165
77	201	181	174	176	171	169	167
78	207	185	178	180	174	172	171
79	208	187	181	183	178	174	174
80	212	190	185	187	180	178	176
81	216	194	189	190	183	180	180
82	219	198	192	194	187	183	183
83	223	201	196	198	189	187	187
84	226	205	199	199	192	190	189
85	230	208	203	203	196	192	192
86	234	212	207	207	199	196	196
87	239	216	210	210	203	199	198
88	243	221	214	214	207	203	201
89	246	225	217	219	210	207	205
90	252	228	221	223	214	208	208
91	257	232	226	226	217	212	210

Time (min)	TC #294	TC #295	TC #296	TC #297	TC #298	TC #299	TC #300
92	261	235	230	230	221	216	214
93	266	241	234	234	225	219	217
94	271	246	239	237	228	223	221
95	277	250	243	243	232	226	225
96	282	255	246	246	235	230	226
97	288	259	252	252	239	232	230
98	293	264	255	255	244	235	234
99	298	268	261	259	248	239	237
100	302	426	266	264	252	243	241
101	309	289	270	270	255	246	244
102	315	482	275	273	259	250	248
103	320	475	279	279	264	253	252
104	325	545	475	284	268	257	255
105	331	590	496	288	273	261	259
106	336	592	504	293	277	264	262
107	342	594	457	298	282	268	268
108	349	642	514	304	286	273	271
109	354	655	495	309	291	277	275
110	361	729	468	315	295	280	280
111	367	716	774	320	300	297	286
112	374	721	723	325	306	289	291
113	381	759	581	441	309	316	297
114	572	763	516	513	315	320	302
115	709	772	577	518	320	414	309
116	754	779	583	460	325	468	316
117	761	774	651	419	331	469	322
118	797	772	540	455	336	475	331
119	808	779	680	372	342	478	338
120	820	786	626	435	347	473	347
121	756	759	765	406	352	408	356
122	721	754	689	468	360	486	363
123	819	766	709	448	365	478	374
124	763	745	790	766	388	626	383
125	813	741	799	766	702	588	396
126	828	732	797	846	741	703	496
127	756	738	770	867	770	675	491
128	804	738	847	871	792	617	736
129	802	835	838	907	797	630	756
130	885	891	871	894	799	691	766
131	817	779	876	865	831	720	775
132	858	799	927	887	819	729	783
133	851	790	892	918	792	770	797
134	811	849	981	930	801	797	811
135	867	756	999	880	842	783	822
136	894	869	1008	824	862	790	831
137	883	862	995	862	874	808	853

Time (min)	TC #294	TC #295	TC #296	TC #297	TC #298	TC #299	TC #300
138	887	826	781	815	885	747	856
139	927	943	732	615	918	788	806
140	927	918	702	844	910	795	898
141	936	937	745	882	928	833	896
142	790	892	804	883	961	851	914
143	795	910	793	885	972	880	914
144	824	909	905	898	986	889	930
145	846	865	858	932	1000	903	950
146	864	898	756	981	963	910	977
147	813	916	786	783	927	934	883
148	788	903	774	792	1011	939	849
149	876	898	743	788	714	862	887
150	824	783	736	777	919	867	1008
151	808	826	716	759	649	862	907
152	738	874	702	747	855	900	770
153	698	867	682	736	570	786	815
154	772	831	664	752	622	759	759
155	736	833	675	745	579	799	765
156	738	838	662	732	585	829	759
157	727	793	648	808	612	833	763
158	709	847	657	846	597	820	756
159	743	774	653	826	604	806	766
160	759	793	696	963	604	828	768
161	736	774	705	806	630	788	748
162	795	885	720	806	612	811	730
163	838	849	721	808	685	817	752
164	883	855	766	802	649	824	772
165	892	910	736	786	651	837	754
166	858	990	709	752	700	770	712
167	828	856	709	763	698	754	768
168	846	831	703	766	671	759	763
169	779	734	714	808	667	829	777
170	817	734	711	783	705	786	770
171	783	714	714	826	712	770	775
172	837	905	716	774	667	694	781
173	799	817	709	795	720	705	720
174	876	788	693	799	741	693	784
175	885	658	687	815	732	698	703
176	851	673	684	813	738	718	756
177	833	698	709	817	734	707	721
178	847	703	705	833	766	702	786
179	849	738	696	774	763	732	795
180	883	748	700	808	752	732	813
Max Temp:	955	820	772	881	824	804	885
Max Allowed:	397	397	397	398	397	397	397

Time (min)	TC# 301 (°F)	TC# 302 (°F)	TC# 303 (°F)	TC# 304 (°F)	TC# 305 (°F)	TC# 306 (°F)	TC# 307 (°F)
0	72	71	70	68	67	68	69
1	72	71	70	68	67	68	69
2	72	71	70	68	67	68	70
3	72	71	70	68	67	68	70
4	72	71	70	68	67	68	70
5	72	71	70	68	67	68	69
6	72	71	70	68	67	68	69
7	72	71	70	68	67	68	70
8	72	71	70	68	67	68	69
9	72	71	70	68	67	68	70
10	72	71	70	68	67	68	69
11	72	71	71	68	67	68	69
12	72	71	70	68	67	68	70
13	72	71	71	68	67	68	70
14	72	71	70	68	67	68	69
15	72	71	70	68	67	68	69
16	72	71	70	68	67	68	70
17	72	71	70	68	67	68	69
18	72	71	70	68	67	68	69
19	72	71	70	68	67	68	69
20	72	71	70	68	67	68	69
21	72	71	70	68	67	68	70
22	72	72	70	68	67	68	70
23	72	72	71	68	67	68	69
24	73	72	70	68	67	68	70
25	73	72	70	68	67	68	70
26	73	72	71	68	67	69	70
27	73	72	70	68	67	68	70
28	73	73	71	68	67	68	70
29	74	73	71	68	67	68	70
30	74	73	71	68	67	68	70
31	75	73	71	68	67	69	70
32	75	74	71	68	67	69	70
33	75	74	72	68	67	69	70
34	77	74	72	68	67	69	70
35	77	75	72	68	67	69	71
36	78	76	73	68	67	70	71
37	78	76	73	68	67	69	71
38	79	77	73	68	67	69	71
39	80	78	73	68	68	70	72
40	81	78	73	68	67	70	72
41	82	79	74	68	68	70	73
42	83	80	75	68	68	70	73
43	84	81	75	68	68	70	74
44	86	82	76	68	68	71	74
45	87	83	76	68	68	71	75

Time (min)	TC# 301 (°F)	TC# 302 (°F)	TC# 303 (°F)	TC# 304 (°F)	TC# 305 (°F)	TC# 306 (°F)	TC# 307 (°F)
46	89	84	77	69	68	71	75
47	90	85	78	69	69	72	76
48	92	87	78	69	69	72	76
49	93	87	79	69	69	72	77
50	95	89	80	69	69	73	77
51	97	90	81	69	69	73	78
52	99	92	81	70	69	74	79
53	101	93	82	70	70	74	80
54	103	95	83	70	70	75	81
55	105	97	84	71	70	75	82
56	107	98	85	71	70	76	83
57	109	100	86	71	71	77	84
58	112	102	87	71	71	77	85
59	114	104	89	72	71	78	86
60	116	106	90	72	72	78	87
61	119	108	92	73	72	79	88
62	121	111	93	73	72	80	89
63	124	113	94	74	73	81	91
64	127	116	96	74	73	82	92
65	130	117	97	75	74	82	93
66	132	120	98	75	74	84	95
67	135	122	100	75	75	84	96
68	138	125	102	76	76	86	98
69	141	127	103	77	76	86	99
70	143	130	105	77	76	87	101
71	146	132	107	78	77	88	102
72	149	134	108	78	77	89	104
73	152	137	110	79	78	91	106
74	155	139	112	80	78	92	107
75	158	142	114	81	79	93	109
76	161	145	116	81	80	94	111
77	164	147	118	82	80	95	113
78	167	150	120	83	81	96	114
79	170	152	121	84	81	97	116
80	173	155	123	85	82	99	118
81	176	158	125	85	83	100	120
82	179	160	127	86	84	102	122
83	181	163	129	87	84	103	123
84	184	166	132	88	85	104	126
85	188	168	133	89	86	105	127
86	190	171	135	90	87	107	130
87	193	173	137	91	87	108	131
88	196	176	139	91	88	109	133
89	199	179	141	93	89	111	135
90	202	182	143	93	90	113	137
91	205	184	145	94	91	114	139

Time (min)	TC# 301 (°F)	TC# 302 (°F)	TC# 303 (°F)	TC# 304 (°F)	TC# 305 (°F)	TC# 306 (°F)	TC# 307 (°F)
92	208	187	147	95	92	116	141
93	211	189	149	96	92	116	143
94	214	193	151	97	93	118	145
95	218	196	153	98	94	120	148
96	221	198	155	100	95	121	150
97	224	202	157	101	96	122	152
98	246	204	237	102	96	124	154
99	231	207	161	103	97	125	156
100	368	211	453	104	99	127	158
101	376	214	464	105	99	128	160
102	243	217	168	106	100	130	162
103	234	221	186	107	101	131	164
104	237	225	190	108	102	133	166
105	241	229	193	109	103	135	168
106	262	233	177	110	104	136	170
107	251	238	199	112	105	137	173
108	530	766	680	113	106	139	175
109	683	831	496	114	107	141	177
110	756	839	737	115	108	142	179
111	696	858	819	116	109	144	181
112	751	871	855	118	110	145	183
113	790	856	853	119	110	147	186
114	749	855	797	120	112	148	188
115	635	858	783	122	112	150	190
116	536	825	865	123	113	152	192
117	681	845	626	124	114	153	194
118	838	840	490	126	115	155	196
119	887	851	862	127	116	156	198
120	887	814	937	129	117	158	201
121	860	865	956	131	118	160	203
122	839	845	934	133	119	161	205
123	866	856	953	134	120	163	208
124	888	867	935	136	121	165	211
125	959	806	826	188	122	167	214
126	920	863	865	190	123	169	217
127	911	811	969	201	124	171	221
128	880	824	933	207	126	174	225
129	843	840	877	500	127	176	229
130	859	847	850	521	128	179	234
131	870	861	824	723	129	182	238
132	886	876	879	729	131	184	243
133	900	888	867	719	132	187	247
134	877	907	869	768	134	190	251
135	934	921	888	804	135	193	256
136	928	931	878	814	137	196	260
137	941	939	889	827	138	199	265

Time (min)	TC# 301 (°F)	TC# 302 (°F)	TC# 303 (°F)	TC# 304 (°F)	TC# 305 (°F)	TC# 306 (°F)	TC# 307 (°F)
138	887	970	883	666	140	202	269
139	863	989	865	743	141	204	272
140	862	1004	860	687	143	207	277
141	866	847	838	679	144	209	280
142	873	817	834	693	145	212	284
143	865	936	834	670	147	214	287
144	889	819	855	740	148	217	291
145	861	753	827	711	150	219	294
146	927	768	828	721	151	221	298
147	830	902	855	745	152	224	301
148	824	926	900	760	154	226	305
149	769	922	926	680	155	229	309
150	756	1036	909	676	157	231	313
151	810	774	903	742	158	234	317
152	786	784	956	741	159	236	321
153	788	780	991	751	160	239	325
154	767	780	975	808	162	241	329
155	744	783	972	805	163	244	332
156	732	787	994	744	165	246	335
157	733	790	1010	808	166	248	338
158	717	790	1024	790	167	250	341
159	753	794	1048	753	169	253	344
160	769	886	830	827	170	255	346
161	793	757	888	833	171	257	349
162	809	730	814	795	173	259	351
163	804	756	801	793	174	260	353
164	816	747	820	727	175	262	356
165	822	734	870	672	176	264	358
166	841	731	842	769	177	266	360
167	777	783	755	698	178	267	362
168	903	688	707	747	179	269	364
169	845	716	687	796	180	270	366
170	655	753	688	786	182	272	367
171	667	789	748	686	183	273	369
172	648	777	722	732	184	275	371
173	656	788	717	781	185	276	373
174	674	798	827	736	186	278	375
175	694	793	737	811	187	279	376
176	702	798	731	768	188	281	378
177	712	793	756	776	189	283	380
178	734	808	764	777	190	284	382
179	753	810	755	815	191	285	384
180	756	817	767	821	192	287	386
Max Temp:	959	1036	1048	833	192	287	386
Max Allowed:	397	396	395	393	392	393	394

Time (min)	TC# 308 (°F)	TC# 309 (°F)	TC# 310 (°F)	TC# 311 (°F)	TC# 312 (°F)	TC# 313 (°F)	TC# 314 (°F)
0	70	71	72	72	73	73	73
1	70	71	72	72	73	73	73
2	70	71	72	72	73	73	73
3	70	71	72	72	73	73	73
4	70	71	72	73	73	73	73
5	70	71	72	73	73	73	73
6	70	71	72	72	73	73	73
7	70	71	72	72	73	73	73
8	70	71	72	73	73	73	73
9	70	71	72	73	73	73	73
10	70	71	72	72	73	73	73
11	70	71	72	72	73	73	73
12	70	71	72	73	73	73	73
13	70	71	72	72	73	73	73
14	70	71	72	73	73	73	73
15	70	71	72	73	73	73	73
16	70	71	72	73	73	73	73
17	70	71	72	72	73	73	73
18	70	71	72	73	73	73	73
19	70	71	72	73	73	73	73
20	70	71	72	73	73	73	73
21	70	71	72	73	73	74	73
22	71	71	72	73	73	74	73
23	70	72	72	73	73	74	73
24	71	72	73	73	73	74	74
25	71	72	72	73	73	74	74
26	71	72	72	73	74	74	74
27	71	72	72	73	74	74	74
28	71	72	72	73	74	74	75
29	71	72	73	74	74	75	75
30	71	73	73	73	75	75	76
31	72	73	73	74	75	76	76
32	72	73	73	74	75	76	76
33	72	74	74	74	76	76	77
34	72	74	74	75	76	77	78
35	73	74	75	75	76	77	78
36	73	75	75	76	77	78	79
37	74	75	75	76	77	78	80
38	74	76	76	77	78	79	80
39	75	77	76	77	78	80	81
40	75	77	77	78	79	80	82
41	76	78	78	78	80	81	83
42	76	79	78	79	81	82	84
43	77	80	80	80	82	83	85
44	78	80	80	81	83	84	86
45	78	81	81	81	84	85	88

Time (min)	TC# 308 (°F)	TC# 309 (°F)	TC# 310 (°F)	TC# 311 (°F)	TC# 312 (°F)	TC# 313 (°F)	TC# 314 (°F)
46	79	82	82	83	85	86	89
47	80	84	83	84	86	88	91
48	81	85	84	85	87	89	93
49	82	86	85	86	88	90	94
50	83	87	86	87	90	92	97
51	84	88	88	89	92	94	100
52	85	90	89	90	93	96	102
53	86	92	90	92	95	98	105
54	87	93	92	93	97	100	108
55	89	94	93	95	100	103	112
56	90	96	95	97	102	106	115
57	92	98	97	99	105	109	118
58	93	100	99	102	107	112	122
59	94	102	101	104	110	115	126
60	96	104	103	107	114	119	130
61	98	106	106	109	117	123	134
62	100	108	108	112	120	126	137
63	101	110	110	115	123	130	141
64	103	113	113	118	127	134	145
65	105	115	116	121	130	137	149
66	107	117	118	124	134	141	152
67	109	120	121	127	137	145	156
68	111	123	124	130	140	148	159
69	113	125	127	134	144	152	163
70	115	128	130	137	148	155	166
71	118	131	132	139	151	159	169
72	119	133	136	143	154	162	172
73	122	136	138	146	156	165	176
74	124	139	142	149	159	168	178
75	127	141	145	152	162	171	180
76	129	145	147	155	165	173	183
77	130	147	150	158	168	176	185
78	133	150	153	160	170	179	187
79	136	153	156	163	172	181	188
80	138	155	159	166	175	183	190
81	141	158	162	168	177	185	192
82	143	161	164	170	179	187	193
83	145	163	167	173	181	188	195
84	148	166	170	175	183	190	196
85	151	169	173	178	184	191	198
86	153	172	176	180	186	193	199
87	155	175	178	182	188	194	201
88	158	177	181	185	189	195	202
89	160	181	184	187	192	197	204
90	163	184	187	189	194	198	207
91	165	186	189	192	196	200	209

Time (min)	TC# 308 (°F)	TC# 309 (°F)	TC# 310 (°F)	TC# 311 (°F)	TC# 312 (°F)	TC# 313 (°F)	TC# 314 (°F)
92	168	189	192	195	198	203	212
93	170	192	195	198	201	205	215
94	173	195	198	200	204	209	219
95	175	198	201	203	207	212	223
96	178	201	204	206	210	216	227
97	180	204	207	209	213	219	231
98	183	207	210	213	217	223	235
99	186	210	214	216	220	227	239
100	188	213	217	219	224	230	243
101	191	216	220	222	227	234	247
102	194	219	223	225	231	238	252
103	196	222	226	229	234	242	256
104	199	225	229	232	238	246	260
105	202	228	232	235	241	250	265
106	205	231	236	239	245	254	269
107	207	234	239	242	249	258	274
108	210	238	242	245	253	261	278
109	213	241	246	249	256	265	282
110	215	244	249	253	260	269	287
111	218	247	253	256	264	273	292
112	221	251	256	259	267	278	296
113	223	254	259	262	271	282	301
114	226	257	263	266	275	286	305
115	229	260	267	269	279	290	310
116	232	264	270	273	283	294	315
117	235	267	274	276	286	298	320
118	237	270	278	280	290	303	325
119	240	274	281	283	294	307	330
120	243	277	285	287	298	311	335
121	246	281	288	291	302	315	340
122	250	284	292	294	306	320	345
123	254	288	296	298	310	324	351
124	257	293	300	301	314	329	356
125	262	297	304	305	318	333	362
126	267	302	308	309	322	338	367
127	272	308	312	313	326	343	373
128	278	314	317	317	331	348	379
129	284	319	322	321	335	354	385
130	290	325	327	325	339	359	391
131	296	332	331	330	344	364	397
132	302	338	337	334	349	370	404
133	308	345	342	339	354	375	411
134	314	352	347	343	358	380	417
135	321	359	353	348	363	386	424
136	327	366	358	353	368	392	431
137	332	372	364	358	373	398	438

Time (min)	TC# 308 (°F)	TC# 309 (°F)	TC# 310 (°F)	TC# 311 (°F)	TC# 312 (°F)	TC# 313 (°F)	TC# 314 (°F)
138	338	379	370	363	378	404	445
139	344	386	376	368	384	411	452
140	349	393	382	374	389	417	460
141	354	399	388	379	394	423	467
142	359	406	394	385	401	430	475
143	365	413	400	390	406	437	483
144	370	420	407	396	412	443	491
145	375	427	413	401	418	450	500
146	381	435	420	407	424	457	508
147	387	443	427	413	430	465	517
148	393	451	434	420	436	472	526
149	399	459	441	426	442	479	534
150	405	466	448	433	449	487	543
151	411	473	455	439	456	495	553
152	416	480	462	446	462	503	562
153	422	486	469	452	469	511	571
154	426	492	476	459	476	519	580
155	430	498	482	466	483	527	589
156	435	504	489	472	490	535	599
157	439	510	496	479	497	544	610
158	442	515	502	486	504	552	622
159	446	521	509	492	511	560	633
160	450	526	515	499	518	568	640
161	453	532	522	506	525	577	629
162	456	537	528	513	533	586	638
163	460	542	535	520	540	596	649
164	462	548	541	526	547	605	666
165	465	553	548	534	555	615	671
166	468	557	554	540	563	625	685
167	471	562	560	547	571	635	693
168	474	566	566	554	578	645	719
169	477	571	572	561	586	653	704
170	479	575	579	568	599	667	742
171	482	579	584	575	624	679	757
172	484	583	590	582	608	690	765
173	487	587	597	590	631	701	725
174	489	591	603	598	636	668	660
175	491	595	609	608	637	670	666
176	494	600	616	617	643	656	688
177	497	605	623	626	635	676	704
178	499	611	619	635	639	667	672
179	503	616	624	644	639	664	678
180	506	620	630	652	636	671	686
Max Temp:	506	620	630	652	643	701	765
Max Allowed:	395	396	397	397	398	398	398

Time (min)	TC# 315 (°F)	TC# 316 (°F)	TC# 317 (°F)	TC# 318 (°F)	TC# 319 (°F)	TC# 320 (°F)	TC# 321 (°F)
0	73	73	73	73	73	73	73
1	73	73	73	73	73	73	73
2	73	73	73	73	73	73	73
3	73	73	73	73	73	73	73
4	73	73	73	73	73	73	73
5	73	73	73	73	73	73	73
6	73	73	73	73	73	73	73
7	73	73	73	73	73	73	73
8	73	73	73	73	73	73	73
9	73	73	73	73	73	73	73
10	73	73	73	73	73	73	73
11	73	73	73	73	73	73	73
12	73	73	73	73	73	73	73
13	73	73	73	73	73	73	73
14	73	73	73	73	73	73	73
15	73	73	73	73	73	73	73
16	73	72	73	73	73	73	73
17	73	73	73	73	73	73	73
18	73	73	73	73	73	73	73
19	73	73	73	73	73	73	73
20	73	73	73	73	73	73	73
21	73	73	73	73	73	73	73
22	74	73	74	74	73	74	73
23	74	73	73	74	74	73	73
24	74	73	74	74	74	74	73
25	74	74	74	74	74	74	74
26	74	74	74	74	74	74	74
27	75	74	75	74	75	74	74
28	74	75	75	75	75	74	74
29	75	75	75	76	75	75	75
30	75	75	76	76	76	76	75
31	76	76	76	76	76	76	76
32	76	76	77	77	77	76	76
33	77	77	77	78	78	76	76
34	77	77	78	78	78	77	77
35	78	78	79	79	79	78	77
36	78	79	80	80	80	78	78
37	79	80	80	81	80	79	79
38	80	80	81	81	81	80	80
39	81	81	82	83	83	80	80
40	81	82	83	84	84	82	81
41	82	83	84	85	85	82	82
42	83	84	86	86	86	83	83
43	85	85	87	88	87	85	84
44	86	86	88	89	88	86	86
45	87	88	90	90	90	87	87

Time (min)	TC# 315 (°F)	TC# 316 (°F)	TC# 317 (°F)	TC# 318 (°F)	TC# 319 (°F)	TC# 320 (°F)	TC# 321 (°F)
46	88	90	92	92	92	88	88
47	90	91	93	94	93	90	90
48	91	93	94	96	95	92	91
49	93	94	96	97	97	93	93
50	94	96	98	99	99	95	95
51	97	98	100	101	101	97	96
52	98	100	102	104	103	98	98
53	100	102	104	106	105	100	100
54	103	104	107	108	107	102	102
55	105	107	109	110	110	104	104
56	107	109	112	113	112	107	106
57	110	112	114	115	114	109	109
58	113	114	117	118	117	112	111
59	116	117	119	120	120	114	113
60	119	120	122	124	123	116	116
61	123	123	125	126	125	119	119
62	126	126	129	129	128	122	121
63	129	129	131	132	131	124	124
64	132	132	135	135	134	127	127
65	136	135	138	138	137	130	130
66	139	139	141	141	140	133	133
67	143	142	144	145	143	136	136
68	147	146	147	148	146	139	139
69	150	149	151	151	149	142	142
70	154	153	154	155	152	145	145
71	157	156	158	158	156	148	148
72	161	160	161	161	159	152	152
73	165	164	165	164	162	155	154
74	168	167	169	168	165	158	158
75	172	171	172	172	168	161	161
76	175	174	176	176	172	165	164
77	178	178	180	179	176	168	168
78	181	182	184	183	179	171	171
79	184	185	188	187	183	175	174
80	187	189	192	191	187	178	178
81	190	192	196	196	191	182	182
82	193	196	200	200	195	186	185
83	196	200	204	205	199	189	189
84	198	203	208	209	203	193	192
85	200	207	212	214	207	197	196
86	203	210	217	219	212	201	200
87	206	214	221	223	216	205	204
88	209	218	226	229	221	209	208
89	212	222	231	234	226	213	212
90	215	226	236	240	231	218	216
91	218	230	241	245	235	222	220

Time (min)	TC# 315 (°F)	TC# 316 (°F)	TC# 317 (°F)	TC# 318 (°F)	TC# 319 (°F)	TC# 320 (°F)	TC# 321 (°F)
92	221	235	247	252	240	227	224
93	225	239	252	258	245	231	228
94	229	244	258	264	251	236	232
95	232	249	264	270	256	241	237
96	237	254	270	277	262	246	241
97	241	259	276	283	268	250	246
98	245	264	282	290	273	255	250
99	249	270	288	297	279	261	255
100	254	275	295	304	285	265	259
101	258	281	302	312	291	271	264
102	263	287	309	319	296	276	269
103	267	293	316	327	303	281	274
104	272	299	323	334	309	286	279
105	277	305	331	342	315	292	283
106	282	311	338	350	322	298	289
107	287	317	345	358	328	303	294
108	292	323	353	366	335	309	299
109	297	329	361	374	341	314	304
110	302	336	369	383	348	320	310
111	307	342	377	391	355	326	315
112	312	349	386	400	363	332	321
113	317	355	394	409	370	338	327
114	323	362	403	418	377	344	332
115	328	369	412	427	385	350	338
116	334	376	421	437	392	357	344
117	339	383	430	446	400	363	351
118	345	391	439	456	408	370	357
119	351	398	449	466	416	376	363
120	357	406	458	477	424	383	369
121	363	414	468	488	433	390	376
122	370	422	479	499	441	397	383
123	376	430	489	510	449	404	390
124	382	438	500	521	458	411	397
125	389	446	510	532	467	418	403
126	396	454	521	544	476	425	411
127	403	463	533	556	485	433	418
128	410	472	544	567	494	441	425
129	417	480	555	598	503	449	432
130	425	490	567	592	513	456	539
131	432	499	579	606	522	464	447
132	440	508	591	619	532	472	474
133	448	518	604	629	542	480	639
134	456	527	616	652	552	489	527
135	464	537	629	664	562	497	666
136	472	547	642	673	572	505	669
137	481	557	655	686	582	514	544

Time (min)	TC# 315 (°F)	TC# 316 (°F)	TC# 317 (°F)	TC# 318 (°F)	TC# 319 (°F)	TC# 320 (°F)	TC# 321 (°F)
138	489	567	668	707	593	522	633
139	498	577	681	711	603	535	613
140	507	588	694	733	614	560	635
141	516	599	708	760	625	549	542
142	525	610	722	757	636	560	622
143	535	622	735	776	666	564	703
144	544	634	749	801	682	579	625
145	553	645	764	826	730	584	647
146	563	658	779	825	725	661	718
147	573	670	794	833	740	608	776
148	583	683	809	809	754	600	779
149	593	696	825	816	769	638	840
150	605	709	841	839	796	687	857
151	617	723	857	851	835	699	809
152	628	736	873	862	836	668	889
153	640	750	889	877	828	746	871
154	652	764	906	897	849	792	948
155	665	725	779	922	912	791	964
156	677	745	769	887	878	749	930
157	690	757	816	876	941	799	824
158	703	718	839	917	802	705	831
159	716	838	911	861	866	846	895
160	730	716	771	810	886	727	854
161	744	810	793	833	896	852	865
162	758	838	824	777	922	736	939
163	772	842	854	856	931	690	846
164	780	756	835	899	876	647	677
165	801	811	885	672	965	680	681
166	816	840	801	704	891	674	707
167	778	860	834	706	710	688	702
168	843	677	755	703	771	755	722
169	780	686	820	734	897	722	702
170	845	699	840	760	938	737	718
171	798	643	776	771	946	729	734
172	749	696	946	777	817	636	749
173	653	685	968	867	861	625	740
174	668	640	836	813	818	637	667
175	668	634	734	711	796	646	705
176	657	634	700	655	807	668	673
177	650	647	699	671	821	635	728
178	650	643	748	670	827	636	709
179	661	653	687	664	745	639	658
180	654	664	691	708	841	647	688
Max Temp:	845	860	968	922	965	852	964
Max Allowed:	398	398	398	398	398	398	398

Time (min)	TC# 322 (°F)	TC# 323 (°F)	TC# 324 (°F)	TC# 325 (°F)	TC# 326 (°F)	TC# 327 (°F)	TC# 328 (°F)
0	73	73	72	72	71	71	70
1	73	73	72	72	71	71	70
2	73	73	73	72	72	71	70
3	73	73	72	72	71	71	70
4	73	73	72	72	71	71	70
5	73	73	72	72	71	71	70
6	73	73	72	72	72	71	70
7	73	73	72	72	71	71	70
8	73	73	72	72	71	71	70
9	73	73	72	72	71	71	70
10	73	73	72	72	71	71	71
11	73	73	72	72	71	71	70
12	73	73	72	72	72	71	70
13	73	73	72	72	71	71	70
14	73	73	72	72	71	71	70
15	73	73	73	72	71	71	70
16	73	73	72	73	71	71	70
17	73	73	72	72	71	71	70
18	73	73	73	72	71	71	70
19	73	73	72	72	71	71	70
20	73	73	72	72	71	71	70
21	73	73	72	72	71	71	70
22	73	73	73	72	71	71	70
23	73	73	72	72	71	71	70
24	73	73	73	73	71	71	70
25	73	73	73	73	72	71	70
26	74	74	73	73	72	71	70
27	74	74	73	73	72	71	70
28	75	74	73	73	72	71	71
29	75	75	74	73	72	71	71
30	75	75	74	74	72	72	71
31	75	75	74	74	73	72	71
32	76	76	75	74	73	72	72
33	76	76	75	75	73	72	71
34	77	77	76	75	73	72	72
35	78	77	77	75	74	73	72
36	78	78	77	76	75	73	72
37	79	78	78	77	74	74	72
38	80	79	78	77	75	74	73
39	80	80	79	78	76	75	73
40	81	81	80	79	76	75	74
41	82	81	81	80	77	76	74
42	83	83	82	81	78	77	75
43	85	84	83	82	78	77	75
44	86	85	84	83	79	78	76
45	87	86	85	84	80	79	76

Time (min)	TC# 322 (°F)	TC# 323 (°F)	TC# 324 (°F)	TC# 325 (°F)	TC# 326 (°F)	TC# 327 (°F)	TC# 328 (°F)
46	88	87	86	85	81	80	77
47	90	89	88	86	82	80	78
48	92	90	89	87	83	81	79
49	93	92	90	89	84	82	80
50	94	94	92	90	86	84	81
51	96	95	94	92	87	85	82
52	98	97	95	93	88	86	83
53	100	98	97	95	90	87	84
54	102	101	99	97	91	89	85
55	104	103	101	98	92	91	87
56	106	105	103	100	94	92	88
57	108	107	105	103	96	93	89
58	111	109	107	104	98	95	91
59	113	112	109	107	99	97	92
60	116	114	112	109	102	99	94
61	118	117	114	111	103	100	95
62	121	119	117	114	106	103	97
63	124	122	120	116	108	105	99
64	127	125	122	119	110	107	101
65	129	127	125	122	112	109	103
66	132	130	128	124	115	111	104
67	135	133	130	127	117	113	107
68	138	136	134	130	120	116	109
69	141	139	136	132	122	118	110
70	145	142	139	135	125	120	113
71	148	145	142	138	128	123	115
72	151	148	145	141	131	125	117
73	154	151	149	144	133	128	119
74	157	155	152	147	136	131	121
75	160	158	155	150	139	133	124
76	164	161	158	153	142	136	126
77	167	164	161	155	145	139	128
78	170	168	164	158	147	141	130
79	174	171	167	161	150	144	133
80	177	174	170	164	153	147	135
81	181	178	173	167	156	149	138
82	185	181	176	170	159	152	140
83	188	184	180	174	162	155	143
84	192	188	183	177	165	158	145
85	195	191	186	179	168	160	148
86	199	195	190	183	171	164	150
87	203	199	193	186	174	166	152
88	206	203	197	190	177	169	155
89	211	206	201	193	180	172	158
90	215	210	204	197	184	175	160
91	219	214	208	200	186	178	162

Time (min)	TC# 322 (°F)	TC# 323 (°F)	TC# 324 (°F)	TC# 325 (°F)	TC# 326 (°F)	TC# 327 (°F)	TC# 328 (°F)
92	223	218	211	203	190	181	166
93	227	222	215	206	193	183	168
94	231	226	219	210	196	187	171
95	236	230	223	213	200	190	173
96	240	235	227	217	203	193	176
97	245	239	231	221	206	196	179
98	249	243	235	224	209	199	181
99	254	248	240	228	213	202	184
100	259	252	244	232	216	205	187
101	263	256	248	235	220	208	190
102	268	261	252	239	223	212	193
103	273	266	257	243	227	215	196
104	279	271	261	247	231	219	200
105	283	275	266	250	234	222	203
106	289	280	271	255	238	227	207
107	294	285	275	259	242	231	210
108	299	290	280	263	246	235	215
109	305	295	285	267	250	240	219
110	310	301	290	271	255	245	225
111	316	306	295	276	259	251	231
112	321	312	300	280	265	257	237
113	327	317	305	285	270	265	244
114	333	323	310	290	275	272	252
115	339	329	316	295	281	281	261
116	345	335	322	300	287	290	270
117	351	341	327	305	295	299	280
118	358	347	333	311	302	310	290
119	364	354	339	317	309	321	301
120	371	360	345	323	317	333	312
121	378	367	352	329	325	345	324
122	385	374	358	335	334	358	337
123	392	381	364	342	343	371	350
124	399	388	371	349	352	385	363
125	406	395	378	356	362	398	377
126	414	403	385	363	371	412	391
127	421	410	392	371	381	426	404
128	428	418	399	378	392	441	416
129	436	426	407	386	402	455	430
130	444	599	414	393	412	590	443
131	452	583	422	401	423	482	456
132	460	450	430	410	433	495	623
133	468	595	518	418	443	508	643
134	476	634	590	426	453	642	654
135	485	636	611	434	463	605	667
136	495	625	598	506	473	605	681
137	502	664	658	545	484	601	694

Time (min)	TC# 322 (°F)	TC# 323 (°F)	TC# 324 (°F)	TC# 325 (°F)	TC# 326 (°F)	TC# 327 (°F)	TC# 328 (°F)
138	513	692	615	511	494	691	719
139	564	714	694	596	523	677	730
140	566	690	706	593	688	708	671
141	539	697	650	592	661	648	699
142	608	710	724	624	681	681	716
143	661	734	660	641	690	724	721
144	746	740	726	667	692	728	785
145	754	692	717	692	689	695	756
146	760	784	774	646	711	753	737
147	738	759	788	690	677	664	751
148	716	769	806	769	693	706	773
149	785	724	827	789	732	795	833
150	802	605	819	823	744	831	820
151	817	858	819	855	788	874	874
152	832	901	851	883	801	865	865
153	847	919	874	893	855	822	902
154	860	938	879	913	859	923	912
155	876	950	899	919	908	940	922
156	875	880	850	941	939	932	929
157	900	962	876	925	951	978	954
158	917	988	808	863	955	996	931
159	849	910	883	911	958	1002	898
160	872	861	835	867	969	1004	864
161	924	849	919	957	981	993	869
162	861	813	872	865	1016	1037	842
163	855	857	972	844	974	890	865
164	632	805	913	749	1018	919	888
165	848	775	901	882	1084	1072	903
166	653	745	951	801	986	943	886
167	651	684	746	778	879	931	812
168	652	743	636	850	878	844	760
169	677	701	629	698	897	793	779
170	790	707	633	716	901	824	780
171	691	683	638	757	825	797	727
172	895	735	642	726	879	759	741
173	699	701	631	737	970	776	856
174	701	741	631	751	620	766	717
175	697	643	636	760	614	771	682
176	707	635	638	713	620	816	703
177	715	660	660	722	626	781	663
178	724	653	649	733	635	768	670
179	731	664	650	756	644	764	669
180	746	685	664	753	652	791	692
Max Temp:	924	988	972	957	1084	1072	954
Max Allowed:	398	398	397	397	396	396	395

Time (min)	TC# 329 (°F)	TC# 330 (°F)	TC# 331 (°F)	TC# 332 (°F)	TC# 333 (°F)	TC# 334 (°F)	TC# 335 (°F)
0	70	68	67	68	71	71	71
1	69	68	68	68	71	71	71
2	70	68	68	68	71	71	71
3	69	68	67	68	70	71	71
4	69	68	67	68	71	71	71
5	70	68	67	68	70	71	71
6	70	68	67	68	71	71	71
7	69	68	67	68	71	71	71
8	70	68	67	68	70	71	71
9	69	68	68	68	71	71	72
10	69	68	67	68	71	71	72
11	69	68	68	68	71	72	72
12	69	69	68	68	71	72	73
13	69	68	67	68	72	73	74
14	70	68	68	68	72	74	76
15	69	68	67	68	73	76	77
16	70	68	68	68	75	77	79
17	70	68	67	69	76	79	81
18	69	68	67	69	76	81	83
19	69	68	67	69	78	83	86
20	69	68	68	69	79	85	88
21	69	68	68	69	81	87	91
22	69	68	67	69	82	89	93
23	69	68	68	69	83	91	94
24	69	69	68	70	85	92	96
25	69	68	68	70	85	93	97
26	69	68	68	70	86	94	98
27	70	68	68	70	87	95	100
28	70	68	68	71	88	96	100
29	69	68	68	71	89	97	102
30	69	69	69	71	90	98	103
31	70	68	69	71	91	100	105
32	70	68	69	72	91	101	106
33	70	68	69	72	93	103	108
34	70	68	70	72	94	105	111
35	70	69	69	73	95	107	113
36	70	69	70	73	97	110	116
37	70	68	70	74	98	112	119
38	71	68	71	74	100	115	122
39	71	69	70	74	102	118	126
40	71	69	71	75	104	121	130
41	71	69	71	75	106	125	133
42	72	69	71	76	109	129	138
43	72	70	72	76	112	133	142
44	72	70	72	77	115	138	146
45	73	70	72	78	119	142	150

Time (min)	TC# 329 (°F)	TC# 330 (°F)	TC# 331 (°F)	TC# 332 (°F)	TC# 333 (°F)	TC# 334 (°F)	TC# 335 (°F)
46	73	70	73	78	122	147	155
47	74	70	73	79	126	153	160
48	75	71	74	80	129	158	166
49	75	71	74	81	133	163	172
50	76	71	75	81	138	170	180
51	76	71	75	82	142	177	188
52	77	71	76	83	146	185	198
53	78	72	76	85	151	196	213
54	78	73	77	86	158	208	228
55	79	73	78	87	165	221	243
56	80	73	78	88	173	234	258
57	81	74	79	90	183	248	273
58	82	75	80	91	194	262	289
59	83	75	81	93	205	276	305
60	84	75	82	95	217	291	321
61	85	76	83	97	228	306	338
62	87	77	85	100	240	320	354
63	87	78	86	102	253	335	371
64	89	78	88	105	265	349	387
65	90	79	89	107	277	364	403
66	92	80	91	111	289	379	419
67	93	80	93	114	301	393	435
68	94	82	95	118	312	407	451
69	96	82	97	122	324	421	466
70	97	83	99	126	335	435	482
71	99	84	101	130	346	449	497
72	100	85	104	134	356	462	512
73	102	86	106	138	366	475	527
74	103	87	109	142	376	488	541
75	105	88	112	146	385	500	556
76	107	89	114	150	395	512	570
77	109	90	117	154	404	524	584
78	111	91	120	158	413	535	597
79	112	92	122	162	421	546	611
80	114	93	125	167	430	558	624
81	116	94	128	171	438	569	637
82	118	95	131	175	446	579	650
83	120	97	134	178	454	590	662
84	121	98	136	183	462	601	676
85	123	99	139	187	470	611	688
86	125	100	142	191	477	621	698
87	127	102	145	195	485	632	708
88	129	102	148	199	493	641	718
89	131	104	150	203	500	652	729
90	133	105	153	207	508	661	745
91	135	106	157	211	515	671	753

Time (min)	TC# 329 (°F)	TC# 330 (°F)	TC# 331 (°F)	TC# 332 (°F)	TC# 333 (°F)	TC# 334 (°F)	TC# 335 (°F)
92	137	108	159	215	523	681	763
93	139	109	161	218	530	690	777
94	141	110	164	222	537	699	784
95	143	112	166	226	544	709	788
96	145	113	169	229	552	718	793
97	147	114	172	233	559	727	814
98	149	116	174	237	566	736	774
99	151	117	177	241	573	745	785
100	153	119	179	245	579	754	777
101	156	120	182	248	587	764	779
102	158	121	185	252	594	773	761
103	160	123	187	255	601	783	767
104	162	124	190	259	608	789	774
105	165	126	192	262	615	768	774
106	167	128	195	266	622	760	779
107	170	129	197	270	630	763	786
108	173	130	200	273	637	780	788
109	175	132	202	277	645	818	797
110	178	134	205	280	652	814	805
111	181	135	207	284	660	808	818
112	185	137	210	287	669	821	830
113	189	139	212	291	677	870	844
114	193	141	214	295	687	823	884
115	197	143	217	299	695	837	902
116	202	145	220	302	706	871	924
117	207	148	222	305	715	873	979
118	213	150	224	309	725	892	1009
119	219	153	227	313	736	908	1045
120	225	156	229	316	746	902	1062
121	231	158	232	320	757	937	1115
122	238	162	234	324	768	1002	1046
123	245	165	237	328	779	1027	1027
124	252	168	240	332	789	1076	1086
125	260	172	242	335	801	1089	1006
126	267	175	245	339	812	1100	952
127	275	179	247	344	823	1111	1094
128	453	271	250	347	834	1093	1015
129	291	276	253	351	845	1131	927
130	593	204	255	355	855	1140	935
131	614	217	258	360	867	1147	878
132	628	400	260	364	877	1155	1018
133	637	237	263	367	887	1162	1118
134	659	241	265	372	898	1169	969
135	672	559	268	376	908	1175	1002
136	688	625	271	380	918	1181	1084
137	693	655	274	384	927	1187	1144

Time (min)	TC# 329 (°F)	TC# 330 (°F)	TC# 331 (°F)	TC# 332 (°F)	TC# 333 (°F)	TC# 334 (°F)	TC# 335 (°F)
138	710	672	276	388	937	1192	1150
139	726	694	279	392	946	1200	1295
140	735	703	282	397	955	1205	1291
141	746	707	285	401	963	1211	1172
142	757	726	287	405	972	1217	1167
143	747	741	290	409	980	1223	1121
144	803	737	292	413	989	1228	1104
145	786	773	295	417	997	1233	1082
146	841	760	298	421	1005	1238	1150
147	824	783	300	425	1012	1245	1152
148	830	561	303	429	1018	1248	1124
149	840	777	306	433	1025	1251	1081
150	842	849	308	437	1031	1252	1127
151	869	853	311	441	1027	1259	1033
152	858	897	313	445	1043	1261	908
153	877	913	316	448	1050	1264	1136
154	933	890	319	452	1037	1268	1018
155	941	933	321	456	1061	1272	919
156	956	804	324	460	1066	1275	1106
157	1011	871	326	463	1072	1276	934
158	1022	813	329	467	1078	1278	911
159	1031	871	331	470	1074	1280	1026
160	1047	787	334	474	1084	1283	939
161	1030	783	336	478	1093	1287	985
162	1021	832	338	481	1078	1291	1142
163	1021	859	341	485	1105	1295	908
164	978	839	343	488	1075	1299	1153
165	1066	866	345	491	1071	1302	1100
166	1083	833	347	495	1121	1306	1219
167	993	859	350	498	1099	1310	1080
168	704	854	352	502	1131	1314	1102
169	650	865	354	505	1135	1318	1033
170	650	903	356	508	1140	1322	1019
171	666	750	358	510	1144	1326	1044
172	661	757	360	513	1148	1330	1140
173	664	767	362	516	1152	1334	1120
174	674	778	364	519	1157	1339	967
175	658	793	366	523	1161	1343	1321
176	663	743	368	525	1165	1274	983
177	673	727	370	528	1168	1332	1505
178	668	761	372	531	1172	1355	1421
179	696	714	374	534	1176	1315	1449
180	711	727	376	537	1179	1233	1420
Max Temp:	1083	933	376	537	1179	1355	1505
Max Allowed:	395	393	392	393	396	396	396

Time (min)	TC# 336 (°F)	TC# 337 (°F)	TC# 338 (°F)	TC# 339 (°F)	TC# 340 (°F)	TC# 341 (°F)	TC# 342 (°F)
0	71	72	72	72	72	72	73
1	71	72	72	72	72	72	73
2	71	72	72	72	72	72	73
3	71	72	72	72	72	72	73
4	71	72	72	72	73	73	74
5	71	72	72	72	73	73	74
6	71	72	72	72	73	73	75
7	71	72	72	73	73	74	75
8	71	72	72	73	73	74	77
9	72	72	73	73	74	75	78
10	72	72	73	73	75	76	79
11	73	73	73	74	75	78	81
12	73	73	74	75	76	79	83
13	73	73	74	76	77	81	86
14	75	75	75	78	79	83	88
15	76	75	77	79	81	85	92
16	78	77	79	81	83	88	95
17	79	79	81	83	86	92	99
18	82	81	83	86	89	95	104
19	84	83	85	88	91	98	108
20	87	86	88	91	94	102	112
21	89	88	90	94	97	106	116
22	91	90	93	96	101	109	121
23	93	92	95	99	103	112	125
24	95	95	97	101	106	115	129
25	97	96	99	103	108	118	132
26	98	98	101	105	111	121	136
27	99	100	102	108	113	124	140
28	101	101	104	109	115	126	144
29	102	103	106	111	117	129	147
30	104	105	108	113	120	132	151
31	106	107	110	115	122	135	154
32	108	109	113	118	124	137	157
33	110	111	115	120	127	140	161
34	112	114	117	123	129	143	165
35	115	117	120	126	133	146	170
36	118	120	123	129	136	149	174
37	121	123	126	132	139	153	180
38	125	126	130	135	142	156	186
39	128	131	133	140	146	160	193
40	132	134	137	143	150	165	202
41	136	139	141	146	154	170	210
42	141	143	145	151	157	176	219
43	145	148	149	155	162	183	229
44	149	153	153	159	166	192	239
45	155	158	157	163	172	200	250

Time (min)	TC# 336 (°F)	TC# 337 (°F)	TC# 338 (°F)	TC# 339 (°F)	TC# 340 (°F)	TC# 341 (°F)	TC# 342 (°F)
46	159	164	162	169	179	210	261
47	165	169	168	174	186	220	273
48	171	176	175	181	195	231	285
49	178	183	181	187	204	242	298
50	186	191	190	197	215	254	310
51	196	201	200	209	228	266	324
52	208	213	214	222	240	278	338
53	222	226	227	235	253	292	353
54	237	240	241	249	267	306	368
55	253	255	256	264	281	321	384
56	270	271	272	278	296	336	400
57	287	287	289	295	312	352	418
58	305	305	306	311	329	369	436
59	323	323	325	329	346	387	454
60	341	343	344	347	364	405	474
61	359	362	363	367	383	425	494
62	377	382	384	387	403	445	515
63	395	401	404	407	424	466	536
64	413	421	424	428	444	488	558
65	430	440	444	449	466	509	581
66	448	459	464	470	488	531	604
67	465	478	484	491	510	554	628
68	483	496	504	512	533	577	652
69	499	515	523	533	555	602	676
70	516	533	542	555	578	607	685
71	532	550	562	576	605	646	727
72	548	567	580	597	628	675	751
73	564	585	599	618	653	700	674
74	580	602	618	640	674	727	679
75	595	619	646	660	682	743	704
76	610	635	660	661	697	720	666
77	651	656	674	658	711	741	681
78	667	676	687	682	720	739	749
79	682	692	701	697	742	728	843
80	696	705	711	704	787	738	788
81	700	729	738	708	777	737	769
82	707	744	750	747	791	785	873
83	687	719	782	782	793	782	781
84	711	724	775	766	768	755	793
85	733	763	769	783	793	769	659
86	726	756	780	831	875	835	717
87	748	771	771	831	861	827	793
88	758	791	798	821	858	718	764
89	804	836	783	821	883	730	739
90	789	812	778	865	836	718	775
91	787	828	746	867	843	731	757

Time (min)	TC# 336 (°F)	TC# 337 (°F)	TC# 338 (°F)	TC# 339 (°F)	TC# 340 (°F)	TC# 341 (°F)	TC# 342 (°F)
92	817	868	710	878	861	697	761
93	827	880	707	898	866	716	878
94	863	902	714	933	864	767	794
95	827	863	723	940	900	821	949
96	804	862	716	901	909	836	785
97	830	891	714	965	874	855	804
98	869	979	730	982	864	926	775
99	863	966	736	984	935	911	798
100	897	931	742	982	934	796	804
101	887	937	748	1017	969	872	808
102	785	936	748	978	1008	835	830
103	836	995	755	1101	1035	786	889
104	802	1022	760	1061	1076	829	935
105	809	1054	770	1073	1011	840	898
106	854	1114	783	1095	1111	830	892
107	883	1140	795	1094	1121	925	897
108	925	1129	806	1087	1139	951	977
109	974	1080	824	1130	1065	937	920
110	1046	1126	838	1153	1212	1124	929
111	1027	1120	856	1138	1219	1035	1119
112	970	1115	892	1134	1225	1037	1103
113	1054	1140	929	1185	1231	919	1008
114	984	1195	931	1183	1228	1103	878
115	1132	1193	946	1210	1218	969	1020
116	1211	1202	963	1216	1237	1131	1050
117	1152	1219	982	1229	1249	1055	982
118	1185	1228	1012	1241	1262	1054	1183
119	1183	1200	1020	1255	1269	1020	1128
120	1180	1196	1028	1269	1280	853	1175
121	1133	1240	1053	1295	1396	849	1123
122	1127	1148	1063	1351	1419	801	719
123	1105	1227	1099	1361	1441	777	728
124	1133	1269	1103	1375	1444	860	745
125	1158	1308	1125	1381	1432	815	770
126	1196	1304	1163	1387	1394	775	803
127	1079	1331	1169	1396	1440	869	743
128	1097	1331	1191	1404	1071	840	836
129	1126	1343	1163	1205	942	834	833
130	932	1351	1207	1411	989	859	864
131	787	1358	1219	1429	1462	844	864
132	775	1362	1171	1107	936	861	880
133	851	1367	1234	1392	1375	982	1051
134	805	1376	1262	1454	1273	930	836
135	758	1381	1244	1308	1508	1036	874
136	774	1388	1247	1328	1162	970	881
137	786	1391	1282	1479	1369	1209	873

Time (min)	TC# 336 (°F)	TC# 337 (°F)	TC# 338 (°F)	TC# 339 (°F)	TC# 340 (°F)	TC# 341 (°F)	TC# 342 (°F)
138	766	1398	1287	1487	1385	1122	884
139	778	1404	1310	1495	1427	1279	890
140	822	1413	1310	1482	1076	1314	903
141	785	1419	1318	1511	1087	1362	904
142	792	1426	1283	1368	1000	1371	936
143	945	1434	1317	1483	1126	1497	1012
144	769	1441	1333	1535	1545	1574	1028
145	770	1448	1312	1432	1497	1492	946
146	771	1455	1343	1553	1162	1617	951
147	777	1461	1344	1547	1378	1632	967
148	782	1468	1318	1434	1261	1637	973
149	789	1475	1299	1338	1665	1502	1026
150	795	1481	1361	1584	1680	1718	1067
151	801	1488	1365	1596	1709	1639	1138
152	1313	1495	1368	1629	1728	1577	1376
153	1436	1502	1371	1644	1747	1604	1093
154	905	1509	1373	1661	1759	1846	1834
155	850	1517	1375	1677	1777	1848	1909
156	1459	1524	1377	1175	1791	1698	1928
157	1467	1531	1379	1086	1804	1850	1935
158	833	1539	1382	1122	1746	1798	1118
159	815	1549	1385	1739	1833	1863	1881
160	1160	1558	1391	1748	1845	1866	1877
161	949	1567	1394	1765	1857	1877	1833
162	908	1578	1399	1783	1868	1886	1978
163	912	1589	1448	1799	1880	1896	1985
164	875	1601	1458	1812	1890	1905	1993
165	952	1613	1460	1823	1900	1915	1999
166	840	1626	1417	1836	1910	1924	1734
167	855	1240	1468	1463	1920	1933	2012
168	1152	1421	1441	1622	1929	1942	2018
169	1085	1303	1427	1508	1938	1951	2026
170	1056	1682	1466	1518	1946	1959	2033
171	1057	1657	1469	1842	1954	1967	2039
172	897	1701	1476	1876	1958	1973	2044
173	923	1317	1430	1485	1946	1892	2042
174	840	1553	1287	1875	1944	1984	2044
175	864	1175	1086	1392	1584	1947	2046
176	861	1533	1245	1522	1483	1994	2048
177	847	1511	1425	1653	1850	1996	2051
178	843	1755	1455	1510	1515	1822	2053
179	846	1658	1318	1442	1521	1946	2057
180	851	1707	1264	1577	1822	1989	2061
Max Temp:	1467	1755	1476	1876	1958	1996	2061
Max Allowed:	396	397	397	397	397	397	398

Time (min)	TC# 343 (°F)	TC# 344 (°F)	TC# 345 (°F)	TC# 346 (°F)	TC# 347 (°F)	TC# 348 (°F)	TC# 349 (°F)
0	73	72	72	71	71	70	67
1	73	72	72	72	73	92	67
2	73	73	73	76	84	174	67
3	74	75	76	81	106	263	66
4	75	77	79	88	133	316	66
5	76	79	82	97	160	365	66
6	78	83	86	109	188	416	66
7	79	86	91	122	216	472	66
8	81	91	97	136	245	526	66
9	84	96	104	151	274	572	66
10	87	101	111	166	302	615	66
11	90	107	118	182	329	655	66
12	93	114	127	198	355	691	66
13	97	120	136	213	381	725	66
14	101	128	145	229	406	758	66
15	106	135	154	245	429	790	65
16	111	143	164	261	453	820	66
17	116	151	173	276	475	848	66
18	121	160	183	291	497	874	66
19	127	168	192	306	518	899	66
20	133	176	202	321	538	923	66
21	139	185	212	335	558	945	66
22	145	194	222	348	577	966	66
23	151	203	231	362	595	985	66
24	157	211	242	376	613	1003	66
25	163	220	251	389	630	1019	66
26	169	229	260	403	646	1036	66
27	175	237	270	416	662	1052	67
28	180	246	280	429	678	1067	66
29	186	255	289	442	693	1082	66
30	192	264	299	455	709	1097	66
31	198	273	310	468	724	1111	66
32	204	283	320	481	740	1126	67
33	211	292	330	494	755	1140	67
34	218	302	341	507	769	1154	67
35	225	312	352	520	785	1168	67
36	232	323	364	534	800	1182	67
37	240	333	375	547	816	1196	67
38	249	344	387	561	831	1210	67
39	258	356	400	575	847	1224	68
40	267	368	413	589	863	1238	68
41	277	380	426	603	879	1250	68
42	287	393	439	618	895	1263	68
43	298	406	453	633	911	1275	69
44	310	420	467	648	928	1288	68
45	322	434	482	664	945	1301	69

Time (min)	TC# 343 (°F)	TC# 344 (°F)	TC# 345 (°F)	TC# 346 (°F)	TC# 347 (°F)	TC# 348 (°F)	TC# 349 (°F)
46	334	449	497	680	963	1313	69
47	347	464	513	697	980	1325	70
48	361	480	529	714	998	1336	70
49	374	496	545	732	1016	1347	70
50	389	513	562	750	1033	1358	70
51	404	531	580	768	1051	1368	71
52	420	549	599	744	1068	1239	71
53	436	568	618	651	846	1234	71
54	453	588	638	665	849	1279	72
55	470	609	658	687	790	1219	72
56	489	630	679	715	778	848	73
57	507	652	701	732	800	854	73
58	527	675	724	761	835	861	74
59	547	699	747	730	759	864	74
60	568	723	770	746	769	791	75
61	590	719	794	801	787	842	75
62	613	738	817	824	816	869	77
63	636	724	841	859	824	880	77
64	660	741	864	774	785	1001	78
65	684	760	826	823	773	958	79
66	709	793	824	821	744	944	80
67	733	890	847	828	759	961	80
68	759	733	901	962	793	968	81
69	784	804	925	987	820	1026	82
70	809	758	988	909	833	1042	83
71	833	883	1007	930	907	1038	84
72	854	716	978	951	962	1046	85
73	881	698	1047	870	878	1061	86
74	833	726	1018	718	882	1086	87
75	922	718	1053	733	881	1121	88
76	868	727	1064	767	911	995	89
77	896	747	1079	772	999	1006	90
78	870	789	1109	829	993	957	91
79	966	816	1163	908	1056	1177	92
80	977	817	1183	888	1041	1034	93
81	932	811	1180	889	1019	762	94
82	955	824	1187	879	961	798	95
83	927	843	1198	891	1054	880	96
84	894	856	1211	927	1118	884	97
85	959	867	1226	934	1121	833	98
86	929	873	1238	940	1052	711	98
87	851	905	1246	890	1151	700	100
88	1010	915	1042	893	1098	695	100
89	998	950	954	913	1186	698	101
90	880	957	927	955	1181	699	102
91	943	971	991	928	1175	706	102

Time (min)	TC# 343 (°F)	TC# 344 (°F)	TC# 345 (°F)	TC# 346 (°F)	TC# 347 (°F)	TC# 348 (°F)	TC# 349 (°F)
92	907	930	852	865	1127	709	103
93	902	991	781	942	1100	717	103
94	913	1014	1028	892	1198	725	104
95	966	1038	928	926	1196	744	105
96	963	1061	1012	913	1195	763	105
97	929	1095	944	936	1165	775	106
98	882	1113	1029	1087	1174	787	107
99	916	1150	880	1050	1206	789	107
100	923	1191	1015	972	1222	800	108
101	921	1184	893	1090	1257	814	108
102	961	1158	777	1119	1012	836	109
103	1047	1108	967	1076	1304	854	110
104	1139	1114	1010	1188	1255	962	110
105	1016	1149	1004	1182	1260	1005	111
106	1119	1160	998	1190	859	1091	112
107	1208	1181	1051	1205	823	1158	112
108	1138	1201	1000	1197	815	1137	112
109	1129	1213	1022	1202	788	1157	112
110	1112	1225	1183	1210	788	1174	112
111	1190	1242	1067	1218	907	1192	113
112	1248	1259	1100	1218	827	1200	114
113	1243	1310	1078	1238	853	1256	114
114	1238	1437	1261	1239	840	1264	114
115	1240	1502	1151	1256	839	1269	115
116	1235	1548	1156	1260	856	1258	115
117	1243	1594	1337	1136	1322	1262	115
118	1227	1624	1249	1122	1516	1262	116
119	1275	1635	1583	1110	1531	1246	116
120	1386	1649	1385	1149	1543	1324	116
121	1435	1663	1550	1418	1555	1657	117
122	1483	1674	1694	982	1567	1202	117
123	1511	1686	1412	1226	1581	1187	117
124	1513	1702	1728	1434	1590	1512	118
125	1514	1720	1716	1649	1605	807	118
126	1481	1734	1617	1549	1624	1410	118
127	1567	1753	1649	1371	1642	746	118
128	1556	1757	1677	1423	1657	816	119
129	1637	1755	1725	1380	1674	731	119
130	1641	1762	1614	1538	1690	732	119
131	1661	1776	1709	1101	1708	766	119
132	1661	1784	1516	1139	1723	762	119
133	1685	1803	1733	1082	1737	1332	119
134	1708	1816	1455	1040	1750	767	119
135	1732	1829	1848	1063	1763	776	119
136	1254	1836	1836	1181	1775	803	119
137	1430	1830	1322	1197	1787	998	119

Time (min)	TC# 343 (°F)	TC# 344 (°F)	TC# 345 (°F)	TC# 346 (°F)	TC# 347 (°F)	TC# 348 (°F)	TC# 349 (°F)
138	1448	1832	1865	1459	1798	994	119
139	1796	1842	1091	1602	1810	1598	119
140	1319	1845	1607	1813	1821	1620	120
141	1325	1855	1227	1693	1832	1504	120
142	1368	1859	1837	1841	1843	1070	120
143	1359	1867	1846	1881	1854	848	120
144	1766	1879	1437	1894	1864	832	120
145	1664	1881	1058	1667	1875	851	120
146	1869	1882	1209	1834	1884	1034	120
147	1880	1838	1222	1934	1894	1014	120
148	1889	1883	1329	1942	1904	824	119
149	1899	1853	1709	1518	1913	809	120
150	1904	1840	1656	1828	1922	815	120
151	1915	1815	1862	1967	1930	800	120
152	1918	1828	1961	1315	1938	770	120
153	1929	1771	1966	1189	1946	833	120
154	1932	1754	1973	1824	1954	834	121
155	1941	1748	1979	1815	1961	785	121
156	1945	1747	1985	1332	1968	844	121
157	1950	1741	1992	1965	1976	810	121
158	1662	1746	1989	1694	1982	818	121
159	1959	1747	1988	1923	1990	909	121
160	1965	1754	1985	1919	1996	844	122
161	1970	1740	1982	1973	1997	1122	122
162	1967	1743	1984	1991	2007	925	122
163	1802	1727	1979	2007	2007	950	122
164	1784	1719	1987	2008	2009	925	122
165	1792	1718	1985	2015	2010	1342	122
166	1980	1730	1372	1827	2011	981	122
167	1796	1740	1980	2020	2015	948	123
168	1939	1749	1013	1656	2010	1264	123
169	1846	1750	1395	1663	2013	1520	123
170	1788	1757	1823	1901	2007	1515	123
171	1805	1761	930	1438	2000	1480	123
172	1809	1769	1906	1841	1995	1257	123
173	1270	1777	1468	1589	1989	1019	123
174	1340	1831	1978	1922	1942	1154	123
175	899	1838	1822	1832	1959	1625	123
176	1121	1850	1927	1694	1738	1822	123
177	1588	1854	1987	1428	1494	1916	123
178	1181	1850	1298	1342	1453	1640	123
179	1116	1851	1931	1361	1468	1726	123
180	1046	1863	1980	1820	1350	1748	123
Max Temp:	1980	1883	1992	2020	2015	1916	123
Max Allowed:	398	397	397	396	396	395	392

Time (min)	TC# 350 (°F)	TC# 351 (°F)	TC# 352 (°F)	TC# 353 (°F)	TC# 354 (°F)	TC# 355 (°F)	TC# 356 (°F)
0	68	70	70	71	71	71	71
1	68	70	70	71	71	71	71
2	68	70	70	71	71	71	71
3	68	69	70	71	71	71	71
4	68	69	70	71	71	71	71
5	67	69	70	71	71	71	71
6	67	69	70	71	71	71	71
7	67	69	70	71	71	71	71
8	67	69	70	71	71	71	71
9	67	69	70	71	71	71	71
10	67	69	70	71	71	71	72
11	67	69	71	72	71	72	72
12	67	69	71	72	72	72	72
13	67	70	72	73	73	74	73
14	67	70	72	74	74	75	74
15	67	70	73	75	76	76	76
16	67	71	75	76	77	78	77
17	67	72	76	78	79	80	79
18	67	73	78	80	81	82	81
19	67	74	80	81	83	84	83
20	67	75	81	83	85	86	85
21	67	76	82	85	87	88	87
22	68	77	84	87	89	90	89
23	67	78	86	89	91	92	91
24	68	79	87	92	93	94	93
25	67	80	89	94	96	96	95
26	68	81	92	97	98	99	98
27	68	83	94	100	101	102	100
28	68	84	97	102	103	104	103
29	69	86	99	104	106	107	105
30	69	87	101	106	108	109	108
31	69	89	103	109	111	111	110
32	69	91	105	111	113	113	112
33	69	92	108	114	115	116	115
34	69	95	111	117	118	118	117
35	70	96	115	120	121	121	120
36	70	99	118	124	125	124	123
37	70	101	122	128	129	128	127
38	71	104	126	132	132	131	130
39	71	106	130	136	136	135	134
40	72	110	135	140	140	139	138
41	72	113	139	145	145	143	142
42	72	116	144	150	148	147	146
43	73	119	149	154	153	151	151
44	73	123	154	160	157	156	155
45	74	127	159	165	162	160	160

Time (min)	TC# 350 (°F)	TC# 351 (°F)	TC# 352 (°F)	TC# 353 (°F)	TC# 354 (°F)	TC# 355 (°F)	TC# 356 (°F)
46	74	131	166	170	168	165	165
47	76	136	175	180	175	171	171
48	76	140	186	193	185	179	180
49	76	146	198	207	199	190	192
50	77	152	212	222	214	204	206
51	78	160	225	237	229	220	221
52	78	169	240	254	246	236	237
53	80	180	254	270	265	253	254
54	80	190	269	288	284	271	272
55	81	200	285	305	304	290	291
56	83	211	299	323	324	309	311
57	84	221	315	341	345	330	332
58	85	232	330	360	366	351	354
59	87	242	346	380	388	374	376
60	88	253	362	399	410	397	399
61	89	263	377	418	433	420	422
62	91	272	392	438	454	443	445
63	93	282	407	456	476	466	467
64	95	291	421	475	498	488	490
65	97	300	435	494	520	511	512
66	99	309	449	512	541	534	534
67	101	317	463	529	562	556	556
68	103	326	475	546	581	578	578
69	105	334	487	561	600	601	599
70	107	342	499	575	616	622	619
71	109	349	510	588	632	648	639
72	111	357	520	601	647	661	657
73	113	364	529	612	661	678	674
74	115	370	537	622	674	698	690
75	117	377	545	632	686	714	705
76	119	383	553	642	699	727	721
77	121	389	560	651	710	737	736
78	123	394	567	659	721	746	751
79	125	399	573	667	732	756	765
80	126	404	579	675	741	769	778
81	128	409	584	682	751	764	789
82	130	414	590	693	760	791	803
83	131	419	595	702	768	772	818
84	133	424	601	710	776	779	832
85	135	428	605	714	783	796	845
86	136	433	610	719	792	797	857
87	138	437	616	724	801	816	849
88	139	441	620	731	806	848	875
89	141	445	624	737	805	838	873
90	142	448	629	742	819	865	885
91	143	452	632	746	827	878	896

Time (min)	TC# 350 (°F)	TC# 351 (°F)	TC# 352 (°F)	TC# 353 (°F)	TC# 354 (°F)	TC# 355 (°F)	TC# 356 (°F)
92	144	454	635	751	834	864	906
93	145	457	638	755	840	868	866
94	146	459	642	759	847	877	866
95	147	462	644	761	854	886	891
96	148	464	647	765	861	899	907
97	149	466	650	768	868	909	982
98	150	468	653	771	875	918	1030
99	151	470	655	775	882	961	1040
100	152	472	658	778	890	972	1049
101	153	474	661	782	899	978	1057
102	154	476	663	785	907	987	1065
103	154	477	666	788	915	984	1074
104	155	479	668	790	921	1002	1082
105	156	480	670	793	927	995	1079
106	156	482	673	796	933	1011	1096
107	158	483	675	799	939	1016	1077
108	158	484	677	801	944	1020	1076
109	159	485	679	804	949	1025	1081
110	159	486	681	807	954	1030	1022
111	160	487	683	810	959	1034	1027
112	160	488	685	813	964	1040	1033
113	160	489	687	816	969	1044	1036
114	161	490	689	820	974	1037	1036
115	162	491	691	823	979	1057	1128
116	162	492	692	826	983	1038	1118
117	163	493	694	829	987	1073	1112
118	163	494	696	831	990	1026	1117
119	164	494	698	834	993	1055	1165
120	164	495	699	836	996	1020	1100
121	164	496	701	839	999	1031	1121
122	165	496	702	840	1001	1028	1124
123	165	497	703	841	1004	1035	1126
124	165	497	704	843	1006	1030	1129
125	166	498	706	845	1009	1035	1133
126	166	499	707	847	1011	1115	1137
127	166	499	708	848	1013	1080	1142
128	166	499	709	849	1015	1019	1148
129	167	500	709	849	1017	1018	1159
130	167	500	710	851	1019	1019	1155
131	167	500	711	851	1021	1021	1156
132	167	501	712	852	1023	1039	1161
133	167	501	712	852	1025	1025	1165
134	167	501	713	851	1027	1037	1230
135	167	501	713	852	1029	1148	1233
136	167	501	714	852	1031	1129	1236
137	167	502	714	850	1032	1136	1239

Time (min)	TC# 350 (°F)	TC# 351 (°F)	TC# 352 (°F)	TC# 353 (°F)	TC# 354 (°F)	TC# 355 (°F)	TC# 356 (°F)
138	167	501	714	848	1034	1086	1242
139	167	502	715	843	1035	1085	1245
140	167	502	715	842	1037	1076	1248
141	167	501	716	841	1038	1068	1250
142	167	502	716	841	1039	1049	1252
143	167	501	716	841	1040	1045	1255
144	167	501	716	841	1041	1058	1257
145	167	501	716	841	1042	1045	1259
146	167	501	716	841	1043	1048	1261
147	167	501	716	840	1044	1049	1263
148	167	500	716	840	1044	1049	1265
149	167	500	716	840	1045	1049	1267
150	166	500	716	839	1045	1049	1269
151	167	500	716	839	1045	1164	1270
152	167	499	716	838	1046	1076	1272
153	167	499	716	838	1046	1077	1274
154	167	499	716	838	1047	1073	1275
155	167	499	716	838	1047	1069	1277
156	167	499	716	839	1048	1070	1278
157	167	499	716	839	1048	1068	1280
158	167	499	717	839	1049	1066	1281
159	167	499	717	839	1049	1075	1282
160	167	499	717	839	1049	1096	1283
161	168	499	717	839	1049	1135	1285
162	168	499	717	839	1050	1136	1286
163	168	499	717	839	1050	1182	1288
164	168	499	717	839	1051	1185	1289
165	168	499	717	839	1051	1198	1290
166	168	499	717	838	1051	1149	1291
167	168	499	717	838	1051	1140	1292
168	168	499	717	838	1052	1153	1293
169	168	499	717	838	1052	1150	1294
170	168	500	718	838	1052	1147	1296
171	168	500	718	837	1053	1158	1296
172	168	500	717	837	1053	1075	1297
173	168	500	718	837	1053	1072	1298
174	168	500	718	836	1053	1069	1299
175	168	500	718	837	1054	1074	1300
176	168	501	718	837	1054	1085	1301
177	168	501	718	837	1054	1088	1302
178	168	501	718	837	1054	1078	1302
179	168	501	719	836	1054	1076	1303
180	168	501	719	836	1055	1082	1304
Max Temp:	168	502	719	852	1055	1198	1304
Max Allowed:	393	395	395	396	396	396	396

Time (min)	TC# 357 (°F)	TC# 358 (°F)	TC# 359 (°F)	TC# 360 (°F)	TC# 361 (°F)	TC# 362 (°F)	TC# 363 (°F)
0	72	72	72	72	72	72	72
1	71	72	72	72	72	72	72
2	72	72	72	72	72	72	72
3	71	71	72	72	72	72	72
4	71	71	72	71	72	72	73
5	71	71	72	72	73	73	73
6	71	71	71	72	72	73	73
7	71	72	72	72	72	73	75
8	71	72	72	72	73	74	76
9	72	72	72	72	73	75	78
10	72	72	72	72	73	76	80
11	72	72	72	72	73	78	83
12	72	73	73	73	75	79	86
13	73	74	74	73	76	81	89
14	75	76	76	75	77	84	92
15	76	78	77	76	78	86	96
16	78	79	78	78	80	89	100
17	80	81	80	80	82	92	103
18	81	82	82	81	84	95	107
19	84	84	84	83	86	98	112
20	85	86	85	85	89	101	116
21	87	87	87	86	91	106	121
22	89	89	88	88	93	109	125
23	91	90	90	90	96	113	130
24	93	92	91	92	98	117	134
25	95	94	93	94	102	120	138
26	97	97	95	97	105	125	143
27	100	98	98	99	108	129	147
28	102	101	100	102	111	134	153
29	105	103	103	105	115	138	158
30	107	106	105	108	118	142	162
31	110	108	108	111	122	146	168
32	112	112	111	113	126	152	173
33	115	114	114	117	129	156	178
34	117	117	118	120	134	161	183
35	121	120	121	124	137	166	189
36	124	124	125	128	142	172	195
37	128	128	129	132	146	178	201
38	131	132	133	136	152	184	207
39	136	136	138	141	158	190	214
40	139	141	142	146	164	197	221
41	144	146	147	152	170	204	229
42	148	150	153	159	178	212	236
43	153	155	158	168	186	220	245
44	158	160	165	177	196	229	254
45	163	167	174	188	206	239	264

Time (min)	TC# 357 (°F)	TC# 358 (°F)	TC# 359 (°F)	TC# 360 (°F)	TC# 361 (°F)	TC# 362 (°F)	TC# 363 (°F)
46	170	175	186	199	217	250	274
47	178	187	199	212	229	261	285
48	189	201	213	226	242	274	297
49	202	215	228	240	256	287	311
50	217	231	244	256	271	301	326
51	232	247	260	273	286	317	341
52	248	264	277	291	303	334	357
53	265	282	294	309	322	352	375
54	284	300	312	328	341	370	394
55	303	319	331	347	361	391	414
56	322	338	350	366	381	412	435
57	343	357	369	386	402	434	457
58	364	377	389	405	423	456	479
59	386	398	408	426	444	479	502
60	408	418	428	446	465	502	526
61	430	438	448	466	486	524	549
62	452	459	469	485	507	547	572
63	474	480	488	505	528	569	596
64	496	501	509	525	547	591	618
65	517	521	528	544	567	612	641
66	539	541	548	564	586	633	659
67	560	562	568	583	606	655	683
68	580	582	587	602	637	675	706
69	601	601	606	625	648	696	723
70	621	620	625	639	674	715	743
71	603	642	644	657	640	733	763
72	655	659	664	675	663	754	782
73	639	673	684	695	675	772	799
74	688	687	707	716	694	782	822
75	692	706	709	724	719	797	852
76	722	722	711	703	732	812	858
77	708	740	715	684	734	829	898
78	747	758	732	671	762	846	930
79	731	776	738	727	755	872	920
80	732	789	751	724	769	901	995
81	748	806	769	767	801	936	1023
82	757	824	709	719	809	974	1074
83	758	840	727	746	831	1014	1060
84	768	854	727	765	849	1052	1126
85	775	878	732	804	904	1084	1145
86	788	898	760	801	914	1114	1145
87	795	923	970	992	1043	1140	1198
88	798	954	802	921	1078	1171	1217
89	815	986	804	900	1110	1198	1197
90	827	1013	822	941	1135	1231	1277
91	846	1038	896	954	1153	1259	1258

Time (min)	TC# 357 (°F)	TC# 358 (°F)	TC# 359 (°F)	TC# 360 (°F)	TC# 361 (°F)	TC# 362 (°F)	TC# 363 (°F)
92	874	1060	938	991	1174	1289	1285
93	1025	1076	896	936	1190	1303	1371
94	1021	1092	1123	1151	1207	1323	1204
95	1054	1104	991	894	1224	1341	1217
96	1025	1116	963	760	1238	1360	1417
97	1076	1126	1142	1188	1252	1376	1336
98	1068	1101	973	1060	1265	1103	1476
99	1094	1144	1171	1203	1277	894	1486
100	1103	1154	996	904	1289	911	1154
101	1112	1094	1094	1137	1300	1272	1302
102	1008	1127	1098	1088	1263	1426	1508
103	1127	1103	1072	1259	1321	925	1376
104	1134	1081	1093	1179	1330	1390	1236
105	1141	1158	1144	1276	1338	1440	1354
106	1147	1200	1214	1282	1346	1444	1521
107	1154	1207	1218	1293	1353	1447	1523
108	1160	1202	1206	1301	1360	1450	1383
109	1166	1221	1232	1308	1367	1454	1360
110	1173	1214	1218	1316	1375	1460	1549
111	1179	1231	1242	1323	1381	1464	1529
112	1184	1241	1252	1330	1387	1470	1363
113	1190	1247	1259	1337	1394	1472	1382
114	1195	1209	1266	1344	1401	1477	1310
115	1202	1260	1274	1351	1409	1483	1543
116	1208	1150	1280	1357	1418	1488	1377
117	1215	1267	1286	1363	1426	1493	1409
118	1221	1068	1292	1369	1434	1499	1341
119	1227	1143	1298	1375	1443	1505	1575
120	1233	1007	1304	1381	1451	1511	1557
121	1239	1039	1309	1388	1456	1517	1556
122	1244	1026	1316	1395	1460	1523	1568
123	1249	1043	1321	1402	1464	1528	1581
124	1254	1009	1326	1408	1466	1533	1585
125	1259	1038	1331	1414	1468	1538	1599
126	1264	1294	1364	1421	1471	1543	1593
127	1268	1194	1370	1427	1475	1548	1588
128	1273	966	1377	1433	1479	1554	1612
129	1277	958	1384	1439	1483	1559	1606
130	1282	957	1390	1444	1488	1564	1615
131	1286	962	1396	1449	1493	1570	1617
132	1290	895	1401	1455	1498	1575	1622
133	1294	962	1405	1460	1503	1581	1624
134	1298	917	1410	1465	1508	1585	1594
135	1302	1353	1415	1470	1514	1591	1644
136	1306	1374	1419	1475	1518	1596	1653
137	1310	1288	1424	1480	1523	1601	1665

Time (min)	TC# 357 (°F)	TC# 358 (°F)	TC# 359 (°F)	TC# 360 (°F)	TC# 361 (°F)	TC# 362 (°F)	TC# 363 (°F)
138	1313	1167	1430	1485	1528	1608	1670
139	1317	1163	1435	1490	1533	1613	1560
140	1321	1130	1437	1495	1538	1619	1694
141	1324	1096	1445	1500	1543	1624	1699
142	1328	1028	1449	1505	1548	1630	1706
143	1332	1013	1454	1509	1554	1635	1711
144	1335	961	1458	1514	1559	1641	1713
145	1338	1010	1462	1519	1565	1646	1728
146	1341	1001	1467	1524	1570	1652	1543
147	1344	1020	1471	1528	1575	1658	1737
148	1347	1019	1474	1533	1580	1664	1742
149	1349	1021	1474	1538	1585	1673	1744
150	1351	1022	1476	1542	1590	1682	1751
151	1354	1381	1384	1547	1595	1689	1758
152	1356	1089	1481	1551	1600	1693	1765
153	1358	1089	1484	1556	1606	1696	1771
154	1360	1094	1487	1560	1611	1700	1776
155	1362	1082	1491	1564	1617	1703	1783
156	1365	1096	1494	1568	1622	1707	1788
157	1367	1091	1497	1572	1627	1711	1795
158	1369	1082	1501	1576	1632	1714	1796
159	1371	1110	1504	1580	1637	1717	1800
160	1373	1061	1507	1584	1642	1721	1806
161	1375	1238	1510	1587	1646	1724	1804
162	1377	1094	1514	1591	1650	1727	1808
163	1379	1305	1517	1595	1655	1731	1812
164	1381	1323	1520	1598	1659	1735	1815
165	1383	1424	1523	1602	1663	1738	1819
166	1385	1207	1526	1605	1666	1742	1822
167	1386	1283	1528	1608	1669	1745	1824
168	1388	1233	1532	1612	1673	1748	1826
169	1390	1332	1534	1615	1677	1752	1829
170	1391	1377	1537	1618	1682	1755	1832
171	1393	1423	1539	1621	1685	1758	1781
172	1394	1121	1541	1624	1690	1761	1703
173	1396	1110	1543	1627	1692	1764	1724
174	1397	1100	1546	1630	1695	1767	1727
175	1399	1083	1548	1633	1696	1770	1729
176	1400	1037	1550	1635	1698	1772	1723
177	1402	1028	1552	1638	1702	1775	1719
178	1403	1055	1554	1640	1703	1777	1721
179	1404	1059	1556	1643	1704	1779	1724
180	1405	1038	1558	1645	1705	1782	1731
Max Temp:	1405	1424	1558	1645	1705	1782	1832
Max Allowed:	397	397	397	397	397	397	397

Time (min)	TC# 364 (°F)	TC# 365 (°F)	TC# 366 (°F)	TC# 367 (°F)	TC# 368 (°F)	TC# 369 (°F)	TC# 370 (°F)
0	71	71	70	73	73	73	74
1	72	73	84	73	73	73	74
2	72	74	125	73	73	73	73
3	72	81	175	73	73	73	73
4	74	93	209	73	73	73	74
5	77	106	243	73	74	73	74
6	81	119	278	73	73	73	73
7	86	133	315	74	74	74	74
8	91	147	351	73	74	74	74
9	97	162	384	73	73	73	74
10	103	177	415	73	73	73	73
11	110	191	444	73	74	74	74
12	117	206	469	74	73	74	74
13	124	219	491	74	73	73	74
14	132	232	513	74	73	74	73
15	140	245	533	73	74	73	74
16	146	257	551	74	74	74	74
17	154	268	569	74	74	74	73
18	161	279	586	73	74	74	74
19	168	289	602	74	74	74	74
20	175	299	617	74	74	74	74
21	182	309	632	74	74	74	74
22	189	319	646	75	75	74	75
23	196	328	661	75	75	74	74
24	202	338	673	76	75	74	75
25	209	346	686	76	76	74	75
26	216	355	698	76	76	74	75
27	222	364	710	77	76	75	75
28	229	372	722	77	77	75	75
29	236	381	734	78	78	75	76
30	242	390	745	79	78	76	77
31	249	398	756	79	79	76	77
32	256	407	767	80	81	77	77
33	263	416	778	81	81	78	78
34	270	424	789	81	82	78	79
35	278	433	801	83	83	79	80
36	285	443	813	84	85	79	80
37	293	452	824	85	86	80	81
38	301	462	837	86	88	81	82
39	310	472	848	88	89	82	83
40	319	482	861	89	91	83	84
41	328	494	873	91	93	83	85
42	337	503	885	93	94	85	87
43	348	515	898	94	96	86	88
44	358	528	910	96	98	87	89
45	370	542	923	98	100	88	90

Time (min)	TC# 364 (°F)	TC# 365 (°F)	TC# 366 (°F)	TC# 367 (°F)	TC# 368 (°F)	TC# 369 (°F)	TC# 370 (°F)
46	382	556	936	100	102	90	92
47	394	569	949	102	105	91	94
48	408	583	962	104	107	93	96
49	422	598	976	106	110	95	98
50	438	612	889	108	112	96	99
51	454	633	845	111	115	98	102
52	471	650	830	113	118	100	103
53	489	668	879	116	121	103	106
54	508	687	923	118	123	105	108
55	527	707	931	122	127	107	111
56	547	727	1082	124	130	109	114
57	568	749	1099	127	133	112	116
58	591	770	1107	130	136	114	119
59	613	792	1126	132	139	116	122
60	636	814	1142	136	143	120	124
61	659	835	1156	139	146	122	127
62	682	855	1083	142	149	125	130
63	705	876	1110	145	152	127	133
64	727	896	1143	148	156	130	136
65	750	917	1170	151	159	133	139
66	772	938	1142	154	162	136	142
67	794	959	1142	158	166	139	145
68	818	983	1138	161	169	142	148
69	842	1003	1157	164	171	145	151
70	810	972	1296	167	175	147	154
71	841	903	1310	170	178	151	157
72	867	1006	1323	173	180	153	160
73	892	954	1338	177	183	157	163
74	911	1029	1351	180	186	160	167
75	903	994	1364	183	189	162	170
76	860	1040	1379	185	191	166	173
77	892	1007	1196	188	192	168	176
78	915	857	1137	191	195	172	179
79	975	761	1108	194	197	174	182
80	967	786	1201	196	200	177	184
81	1126	834	1088	199	202	180	187
82	1128	861	1236	201	205	183	190
83	1105	830	1128	204	207	185	192
84	915	932	1120	206	210	188	195
85	1154	841	1277	209	212	190	198
86	1172	883	1155	212	214	192	200
87	1167	890	1122	214	216	195	203
88	1267	1137	1500	217	218	197	205
89	1177	1101	1302	220	220	200	208
90	1323	1256	1616	222	223	203	211
91	1256	1261	1619	225	224	205	213

Time (min)	TC# 364 (°F)	TC# 365 (°F)	TC# 366 (°F)	TC# 367 (°F)	TC# 368 (°F)	TC# 369 (°F)	TC# 370 (°F)
92	1302	1441	1330	228	227	207	215
93	1396	1469	1255	230	229	210	217
94	911	1354	1246	234	232	213	220
95	972	1513	1231	237	234	216	222
96	1470	1397	1269	240	236	219	225
97	1129	1545	1276	242	238	223	227
98	1510	1556	1264	246	241	226	230
99	1530	1579	1746	248	244	229	233
100	1352	1595	1193	252	247	232	236
101	1542	1609	1316	255	250	236	239
102	1567	1401	1715	258	253	239	242
103	1378	1634	1348	261	256	242	246
104	1533	1647	1351	264	259	246	249
105	1595	1661	1306	268	263	249	253
106	1608	1675	1819	271	266	254	257
107	1618	1684	1823	274	270	257	261
108	1625	1688	1516	278	274	261	264
109	1632	1699	1461	281	278	264	268
110	1628	1708	1837	285	281	269	273
111	1630	1718	1802	289	285	272	276
112	1645	1726	1473	292	289	277	281
113	1649	1734	1504	296	293	281	285
114	1654	1740	1346	300	297	285	289
115	1661	1745	1847	304	300	289	293
116	1676	1750	1488	307	304	293	298
117	1681	1754	1544	311	308	298	302
118	1686	1758	1389	315	313	302	307
119	1692	1759	1852	318	317	306	311
120	1689	1764	1853	322	321	311	316
121	1685	1767	1854	326	325	315	321
122	1694	1770	1866	330	330	320	325
123	1714	1775	1865	334	334	325	330
124	1711	1778	1866	338	338	330	335
125	1717	1781	1874	342	342	334	340
126	1718	1784	1846	346	347	339	344
127	1722	1787	1837	350	351	344	349
128	1728	1790	1880	355	356	349	354
129	1727	1793	1878	359	361	354	359
130	1736	1797	1875	363	365	359	364
131	1739	1801	1874	368	370	364	369
132	1745	1805	1875	372	375	369	374
133	1750	1810	1871	377	380	374	380
134	1689	1814	1793	381	385	379	385
135	1760	1820	1886	386	390	384	390
136	1762	1825	1889	391	396	390	395
137	1767	1830	1892	396	401	395	401

Time (min)	TC# 364 (°F)	TC# 365 (°F)	TC# 366 (°F)	TC# 367 (°F)	TC# 368 (°F)	TC# 369 (°F)	TC# 370 (°F)
138	1768	1835	1894	401	406	400	406
139	1603	1841	1659	406	412	406	412
140	1780	1846	1903	411	417	411	417
141	1783	1851	1906	416	422	417	422
142	1790	1856	1910	422	428	422	428
143	1794	1861	1914	427	433	428	433
144	1798	1866	1918	433	439	434	439
145	1806	1871	1921	439	445	439	445
146	1590	1875	1591	445	451	445	451
147	1814	1879	1929	450	457	451	456
148	1819	1883	1932	456	464	456	462
149	1823	1888	1929	462	471	462	468
150	1827	1892	1931	468	478	468	474
151	1832	1896	1935	474	486	475	480
152	1837	1900	1938	481	494	481	486
153	1842	1905	1941	487	504	487	493
154	1846	1909	1945	493	516	493	499
155	1852	1913	1950	500	530	500	506
156	1857	1918	1954	507	548	507	513
157	1862	1922	1964	515	571	513	520
158	1866	1926	1963	522	602	520	527
159	1871	1931	1970	530	644	528	535
160	1875	1935	1974	538	700	535	543
161	1879	1940	1968	546	777	542	552
162	1884	1945	1974	554	875	550	561
163	1888	1949	1978	563	987	558	572
164	1891	1953	1982	572	1107	566	585
165	1895	1957	1987	581	1223	573	600
166	1899	1960	1991	592	1334	582	618
167	1902	1964	1995	603	1438	591	640
168	1907	1968	1997	615	1531	600	667
169	1912	1972	2000	630	1611	610	699
170	1915	1976	2004	646	1680	620	733
171	1918	1979	1905	664	1742	632	770
172	1921	1984	1757	686	1798	645	809
173	1924	1987	1797	713	1851	660	851
174	1928	1991	1802	748	1897	678	894
175	1933	1994	1807	793	1941	701	935
176	1946	1998	1813	852	1985	734	975
177	1956	2002	1816	929	2027	779	1008
178	1960	2006	1821	1016	2064	843	1042
179	1962	2010	1826	1107	2096	927	1072
180	1961	2015	1831	1218	2123	1027	1103
Max Temp:	1962	2015	2004	1218	2123	1027	1103
Max Allowed:	396	396	395	398	398	398	399

Time (min)	TC# 371 (°F)	TC# 372 (°F)	TC# 373 (°F)	TC# 374 (°F)	TC# 375 (°F)	TC# 376 (°F)	TC# 377 (°F)
0	74	74	74	73	73	73	73
1	74	74	74	74	74	74	74
2	74	74	74	74	74	74	73
3	74	74	74	74	74	74	73
4	74	74	74	74	73	73	73
5	74	74	74	73	74	73	73
6	74	74	74	73	73	73	73
7	74	74	74	74	74	73	74
8	74	74	74	74	73	73	73
9	74	74	74	73	73	73	73
10	74	74	74	74	73	73	73
11	74	74	74	74	73	74	73
12	74	74	74	74	73	74	73
13	74	74	74	73	74	73	74
14	74	74	74	74	74	74	74
15	74	74	74	74	73	74	73
16	74	75	75	73	74	73	74
17	74	74	74	74	74	73	74
18	74	74	74	74	74	74	74
19	74	75	74	74	73	74	74
20	74	74	74	73	73	73	74
21	74	74	74	74	74	74	74
22	74	75	74	73	74	73	75
23	74	75	75	74	74	74	75
24	74	75	75	74	74	74	76
25	75	75	75	74	74	74	76
26	75	75	75	74	74	74	76
27	75	76	75	74	75	74	77
28	75	77	76	74	75	75	78
29	76	77	77	75	75	75	78
30	76	77	77	75	76	75	79
31	76	77	78	75	76	76	80
32	77	79	78	76	76	76	81
33	77	79	79	77	77	77	82
34	78	80	80	77	78	78	83
35	78	81	81	78	78	78	84
36	79	82	82	78	79	79	86
37	80	83	83	79	79	79	87
38	81	84	84	80	80	80	88
39	82	85	86	81	81	81	90
40	83	86	87	82	82	82	92
41	83	87	88	83	83	83	93
42	85	88	90	84	85	85	95
43	86	90	92	85	86	86	97
44	87	91	94	86	87	87	99
45	88	92	95	87	88	89	101

Time (min)	TC# 371 (°F)	TC# 372 (°F)	TC# 373 (°F)	TC# 374 (°F)	TC# 375 (°F)	TC# 376 (°F)	TC# 377 (°F)
46	90	94	97	89	89	91	103
47	91	95	99	90	91	92	105
48	93	98	101	92	93	94	107
49	95	99	103	93	94	96	109
50	97	101	106	95	96	98	111
51	98	103	108	97	98	100	114
52	100	105	110	98	100	102	116
53	102	107	112	100	102	104	118
54	104	109	115	102	104	106	121
55	107	111	118	104	106	108	123
56	109	114	120	106	108	111	126
57	111	116	123	108	110	113	128
58	113	119	126	111	112	116	131
59	116	121	128	113	115	118	134
60	119	125	132	115	117	121	137
61	121	127	135	118	120	124	139
62	124	130	138	121	123	128	142
63	127	133	141	124	126	131	146
64	130	137	144	126	129	134	148
65	133	139	147	129	132	137	151
66	135	142	150	132	135	140	154
67	138	146	153	134	138	143	157
68	141	149	156	138	141	147	160
69	144	152	159	141	144	149	163
70	147	155	162	144	147	153	166
71	150	159	165	147	150	156	168
72	154	161	168	150	154	160	171
73	157	165	171	153	157	164	174
74	160	167	174	157	161	167	177
75	163	171	177	159	164	170	180
76	166	174	180	163	167	173	182
77	169	176	182	166	170	176	184
78	172	179	185	169	174	180	187
79	175	182	187	173	177	183	189
80	177	184	190	176	180	186	191
81	181	187	192	179	183	189	193
82	183	190	194	182	187	193	195
83	186	192	196	185	190	195	196
84	188	194	198	188	193	197	198
85	191	196	199	190	195	200	200
86	194	198	200	192	198	201	203
87	196	200	201	194	199	202	206
88	199	202	202	195	201	203	209
89	202	204	203	198	202	204	212
90	204	206	203	200	203	205	215
91	207	207	204	202	204	205	219

Time (min)	TC# 371 (°F)	TC# 372 (°F)	TC# 373 (°F)	TC# 374 (°F)	TC# 375 (°F)	TC# 376 (°F)	TC# 377 (°F)
92	210	209	204	204	205	205	224
93	213	211	204	207	205	205	227
94	216	213	205	211	207	205	231
95	219	215	205	214	209	205	235
96	221	218	205	217	212	206	238
97	224	221	208	220	215	208	242
98	227	224	213	224	217	211	245
99	230	228	217	227	221	214	248
100	233	232	222	230	225	218	251
101	236	235	226	233	228	223	255
102	239	239	231	236	232	227	258
103	242	242	235	239	235	231	261
104	246	246	239	242	239	235	264
105	249	249	243	246	242	239	268
106	252	253	248	249	246	243	271
107	256	257	252	253	250	247	275
108	260	261	256	256	254	251	279
109	263	264	260	260	258	255	282
110	267	268	265	264	261	259	286
111	271	272	269	267	265	263	290
112	274	276	273	271	269	267	293
113	278	280	278	275	273	271	297
114	282	284	282	278	277	275	301
115	286	288	286	282	281	279	305
116	290	292	290	287	285	284	309
117	294	296	295	290	289	288	313
118	298	301	299	295	294	293	317
119	302	305	303	299	298	297	321
120	306	309	308	303	302	302	325
121	311	313	312	308	307	306	330
122	315	318	317	312	311	310	334
123	320	322	321	316	315	315	338
124	324	326	326	320	320	319	342
125	329	331	330	325	324	325	347
126	333	335	335	329	329	329	351
127	337	340	339	334	333	334	356
128	342	344	344	339	338	338	360
129	346	349	349	343	343	343	365
130	351	353	353	348	347	348	370
131	356	358	358	353	352	353	374
132	361	363	363	358	357	358	379
133	366	368	368	362	362	363	384
134	370	372	373	367	367	368	389
135	376	378	378	372	373	374	394
136	380	383	383	377	378	379	399
137	385	388	388	383	383	384	404

Time (min)	TC# 371 (°F)	TC# 372 (°F)	TC# 373 (°F)	TC# 374 (°F)	TC# 375 (°F)	TC# 376 (°F)	TC# 377 (°F)
138	391	393	394	388	389	390	410
139	396	398	399	393	394	395	415
140	401	403	404	398	400	401	421
141	407	409	410	404	406	407	427
142	412	414	416	409	411	412	432
143	417	419	421	415	417	418	438
144	423	425	427	420	423	425	445
145	429	431	432	426	430	431	451
146	434	436	438	432	436	437	457
147	440	442	444	438	444	445	463
148	446	448	449	444	452	454	470
149	452	453	455	450	461	463	476
150	457	460	461	456	471	473	483
151	464	465	468	462	483	485	489
152	470	473	475	468	497	498	496
153	476	478	482	474	514	514	502
154	482	484	487	480	534	533	510
155	488	1667	494	487	559	557	517
156	495	1688	503	494	589	585	524
157	502	1094	512	501	627	619	532
158	508	518	521	507	673	661	540
159	516	521	533	515	728	711	548
160	523	528	546	522	798	776	557
161	530	535	560	530	884	853	565
162	538	543	577	538	981	938	574
163	545	551	596	546	1080	1026	583
164	553	560	619	553	1180	1115	592
165	561	568	647	562	1275	1202	602
166	568	577	679	570	1368	1289	611
167	577	587	717	580	1456	1372	623
168	586	597	760	590	1535	1448	635
169	595	608	806	602	1604	1516	649
170	605	620	851	614	1663	1574	664
171	616	633	899	628	1717	1629	681
172	628	648	946	645	1772	1686	701
173	643	665	994	665	1821	1736	726
174	660	688	1043	691	1862	1780	757
175	681	716	1087	723	1907	1825	797
176	712	756	1128	767	1949	1869	849
177	754	812	1164	820	1989	1913	916
178	816	892	1195	885	2027	1953	994
179	896	994	1225	958	2058	1989	1075
180	992	1113	1254	1047	2086	2021	1173
Max Temp:	992	1688	1254	1047	2086	2021	1173
Max Allowed:	399	399	399	398	398	398	398

Time (min)	TC# 378 (°F)	TC# 379 (°F)	TC# 380 (°F)	TC# 381 (°F)	TC# 382 (°F)	TC# 383 (°F)	TC# 384 (°F)
0	73	73	73	68	70	71	69
1	73	74	74	68	70	71	68
2	73	74	74	68	70	71	69
3	73	74	74	68	70	71	69
4	73	73	73	68	70	71	68
5	73	73	74	68	70	71	68
6	73	73	73	68	70	71	68
7	74	74	74	68	70	71	68
8	73	74	74	68	70	71	68
9	73	73	74	68	70	71	68
10	74	73	74	68	70	71	68
11	73	74	74	68	70	71	68
12	73	74	74	68	69	71	68
13	73	74	74	68	70	71	68
14	73	74	74	68	70	71	68
15	74	73	74	68	69	70	69
16	73	74	74	68	70	71	68
17	74	74	74	68	70	70	68
18	74	74	74	68	70	70	69
19	73	74	74	68	70	70	69
20	74	74	74	68	69	70	68
21	74	74	74	68	69	70	68
22	75	75	75	68	70	70	69
23	75	76	75	67	69	70	69
24	75	76	76	67	69	70	68
25	75	76	76	68	69	70	69
26	76	77	76	67	69	70	68
27	76	78	76	68	69	70	68
28	76	79	77	67	70	70	68
29	77	80	78	68	69	70	68
30	78	82	79	67	69	70	69
31	78	83	79	68	69	70	68
32	80	85	80	67	69	70	68
33	80	87	81	67	69	70	69
34	80	88	82	68	69	70	68
35	81	90	84	67	69	70	69
36	82	92	85	68	69	70	69
37	83	94	86	67	69	71	69
38	84	97	87	68	69	70	69
39	85	99	89	68	69	70	69
40	87	102	91	68	69	70	69
41	88	104	93	68	69	70	69
42	89	107	95	68	70	70	69
43	91	110	97	68	70	71	69
44	92	112	100	68	69	71	69
45	94	115	102	68	70	71	69

Time (min)	TC# 378 (°F)	TC# 379 (°F)	TC# 380 (°F)	TC# 381 (°F)	TC# 382 (°F)	TC# 383 (°F)	TC# 384 (°F)
46	95	118	104	68	70	71	70
47	97	121	108	68	70	71	70
48	100	124	111	68	70	71	70
49	101	126	113	68	70	71	70
50	103	130	116	69	70	72	70
51	105	132	119	69	70	71	70
52	108	135	121	69	70	71	70
53	110	139	124	69	70	71	71
54	112	142	126	69	70	72	71
55	115	145	129	69	71	72	71
56	117	148	132	69	71	72	72
57	120	151	135	69	71	72	71
58	122	154	138	69	71	72	72
59	125	157	141	69	71	73	72
60	128	161	144	70	72	73	73
61	131	163	147	70	72	73	73
62	134	167	150	70	72	74	73
63	137	170	154	70	72	74	74
64	140	173	157	71	73	75	74
65	143	176	160	71	72	75	74
66	146	178	163	71	73	75	75
67	149	181	166	71	74	76	75
68	153	184	169	71	73	76	75
69	155	186	172	71	74	76	76
70	159	188	175	71	74	77	76
71	162	190	178	71	75	78	77
72	164	192	181	72	75	78	77
73	167	194	183	72	75	78	78
74	170	196	186	72	76	79	78
75	173	197	188	73	76	80	79
76	176	199	191	73	77	81	79
77	178	200	193	73	77	81	80
78	182	201	195	74	78	82	80
79	185	202	196	74	78	83	81
80	187	202	198	74	79	84	82
81	191	203	200	75	80	84	83
82	194	203	201	75	80	85	83
83	197	204	202	76	80	86	84
84	200	204	203	76	81	87	85
85	203	205	204	76	82	88	85
86	206	205	204	77	83	89	86
87	208	205	205	77	83	90	87
88	211	205	205	78	84	91	88
89	214	205	205	78	85	92	89
90	217	206	206	78	86	93	89
91	219	206	206	79	86	94	90

Time (min)	TC# 378 (°F)	TC# 379 (°F)	TC# 380 (°F)	TC# 381 (°F)	TC# 382 (°F)	TC# 383 (°F)	TC# 384 (°F)
92	223	206	206	79	87	95	91
93	226	205	207	80	88	96	92
94	228	207	207	80	89	98	93
95	231	207	208	81	90	99	94
96	234	207	211	81	91	100	95
97	237	213	213	82	92	101	96
98	240	217	216	83	93	103	97
99	243	220	219	83	93	104	98
100	246	225	223	83	95	105	99
101	249	231	228	84	95	106	100
102	253	237	234	85	96	108	101
103	256	242	239	85	97	109	102
104	259	249	244	86	99	110	102
105	263	254	249	86	99	112	104
106	266	259	254	87	100	113	105
107	270	265	259	87	101	115	106
108	274	270	264	88	102	116	107
109	277	275	268	89	103	117	108
110	281	279	273	90	104	119	109
111	285	284	277	90	105	120	110
112	288	289	282	90	106	121	111
113	293	294	286	91	108	123	112
114	297	298	291	92	108	124	113
115	301	303	295	92	110	126	115
116	305	308	300	93	111	128	116
117	309	312	305	94	112	129	117
118	313	317	309	94	113	131	118
119	317	322	314	95	114	132	119
120	322	326	318	96	115	134	121
121	326	332	323	96	116	136	122
122	331	336	328	97	118	138	123
123	335	341	332	98	119	139	125
124	340	346	337	98	120	141	126
125	344	351	342	99	121	143	128
126	349	356	346	100	123	145	129
127	354	362	351	101	124	147	130
128	359	367	356	101	126	149	132
129	364	371	361	102	127	151	133
130	369	377	366	103	128	153	135
131	374	383	371	103	130	155	136
132	379	388	376	104	131	157	138
133	384	393	382	105	133	159	139
134	389	399	387	106	134	161	141
135	394	404	392	107	136	163	143
136	399	410	398	107	137	166	145
137	405	416	403	108	139	168	146

Time (min)	TC# 378 (°F)	TC# 379 (°F)	TC# 380 (°F)	TC# 381 (°F)	TC# 382 (°F)	TC# 383 (°F)	TC# 384 (°F)
138	410	422	409	109	140	170	148
139	416	427	414	110	142	173	150
140	421	433	420	111	143	175	152
141	427	439	425	111	145	177	153
142	433	445	431	112	147	180	155
143	438	451	437	113	148	182	157
144	444	457	443	114	150	184	159
145	450	463	449	115	152	187	161
146	456	470	456	115	153	189	163
147	462	476	462	116	155	192	165
148	468	483	468	118	157	195	168
149	474	490	475	118	158	197	170
150	481	497	482	119	160	200	171
151	487	505	490	120	162	203	173
152	494	513	498	121	164	206	175
153	500	523	507	122	166	209	178
154	507	534	516	123	168	212	180
155	513	547	528	123	170	215	183
156	520	563	541	125	172	218	186
157	528	582	557	126	174	221	188
158	535	608	578	126	176	224	191
159	542	640	605	128	178	228	194
160	550	685	644	129	180	231	196
161	558	746	696	130	183	235	199
162	566	827	768	131	185	238	202
163	575	922	855	132	187	242	204
164	583	1028	956	133	189	245	207
165	591	1135	1060	134	192	249	209
166	600	1243	1166	135	194	253	213
167	611	1349	1273	137	197	257	216
168	621	1446	1372	138	199	262	219
169	633	1531	1461	139	202	266	223
170	647	1602	1534	140	205	271	225
171	662	1667	1603	141	208	275	229
172	680	1730	1672	143	211	280	232
173	702	1786	1732	144	213	284	235
174	729	1835	1786	145	217	289	239
175	765	1886	1842	147	220	294	243
176	811	1935	1895	148	223	299	246
177	870	1982	1943	150	226	304	250
178	938	2024	1988	151	229	309	254
179	1015	2060	2026	153	233	314	257
180	1109	2091	2060	154	236	319	262
Max Temp:	1109	2091	2060	154	236	319	262
Max Allowed:	398	398	398	393	395	396	394

Time (min)	TC# 385 (°F)	TC# 386 (°F)	TC# 387 (°F)	TC# 388 (°F)	TC# 389 (°F)	TC# 390 (°F)	TC# 391 (°F)
0	72	73	73	73	73	73	73
1	72	73	73	73	73	73	73
2	72	73	73	73	73	73	73
3	72	73	73	73	73	73	73
4	72	72	73	73	73	73	73
5	72	72	72	73	73	73	73
6	72	73	73	73	73	73	73
7	72	72	73	73	73	73	73
8	72	72	73	73	73	73	73
9	72	72	73	73	73	73	73
10	72	72	73	73	73	73	73
11	72	73	73	73	73	73	73
12	72	73	73	73	73	73	73
13	72	72	73	73	73	73	73
14	72	72	73	72	73	73	73
15	72	73	72	73	73	73	73
16	73	72	73	73	73	73	73
17	72	72	73	73	73	73	73
18	72	72	72	73	73	73	73
19	72	72	73	73	73	73	73
20	72	72	73	73	73	73	73
21	72	72	73	73	73	73	73
22	72	72	73	73	73	73	73
23	72	72	72	73	73	73	73
24	72	72	73	73	73	73	73
25	72	72	72	73	73	73	73
26	72	72	72	73	72	73	73
27	72	72	73	73	73	73	73
28	71	72	72	73	73	73	73
29	72	72	72	73	72	73	73
30	72	72	73	73	73	73	73
31	72	72	72	73	73	73	73
32	71	72	72	73	73	73	73
33	72	72	73	73	73	73	73
34	72	72	72	73	73	73	73
35	71	72	73	73	73	73	73
36	72	73	73	73	73	73	73
37	72	72	73	73	73	73	73
38	72	72	72	73	73	73	74
39	72	72	73	73	74	73	73
40	72	73	73	73	73	74	73
41	72	72	73	73	73	73	73
42	72	73	73	73	74	74	73
43	72	73	74	74	74	74	74
44	73	73	74	74	74	74	74
45	72	74	74	74	74	74	74

Time (min)	TC# 385 (°F)	TC# 386 (°F)	TC# 387 (°F)	TC# 388 (°F)	TC# 389 (°F)	TC# 390 (°F)	TC# 391 (°F)
46	73	74	74	74	74	74	74
47	73	74	74	75	74	75	75
48	73	74	74	76	75	76	75
49	73	74	75	75	75	76	75
50	73	75	75	76	76	76	76
51	74	75	76	76	76	76	76
52	74	76	76	77	77	77	76
53	74	76	77	78	78	78	77
54	75	76	78	78	78	78	77
55	75	77	79	79	79	78	78
56	75	78	79	80	80	80	78
57	76	79	80	81	81	80	79
58	76	79	81	82	81	81	80
59	77	79	81	83	82	82	80
60	77	81	83	84	84	82	81
61	78	81	83	85	84	84	82
62	78	82	85	87	86	84	83
63	79	83	86	88	87	86	84
64	79	84	87	89	88	87	86
65	80	85	89	91	90	89	87
66	81	86	90	93	92	90	87
67	81	87	92	94	93	92	89
68	82	89	92	96	95	93	90
69	83	90	94	97	96	94	92
70	84	91	96	100	98	96	93
71	85	92	97	102	100	98	94
72	86	94	99	103	102	100	96
73	87	95	101	105	103	101	97
74	88	96	103	107	105	103	99
75	89	97	104	109	107	105	100
76	90	99	106	112	110	107	102
77	91	100	108	113	111	109	104
78	92	102	109	115	113	111	105
79	94	103	111	117	115	112	107
80	95	105	113	119	117	114	108
81	96	106	114	120	119	116	110
82	98	108	116	122	121	118	112
83	99	110	118	124	123	120	113
84	101	111	120	126	125	122	115
85	102	113	121	128	127	123	117
86	103	114	123	129	128	125	118
87	105	116	124	130	130	127	120
88	107	117	126	132	131	128	122
89	108	119	128	133	133	130	123
90	110	120	129	134	135	132	124
91	111	122	130	135	136	133	126

Time (min)	TC# 385 (°F)	TC# 386 (°F)	TC# 387 (°F)	TC# 388 (°F)	TC# 389 (°F)	TC# 390 (°F)	TC# 391 (°F)
92	112	124	132	137	137	134	127
93	113	124	133	138	138	136	129
94	115	126	135	139	140	137	130
95	117	128	136	140	142	139	132
96	119	129	138	142	143	140	134
97	120	131	139	142	145	141	135
98	122	132	141	144	146	142	136
99	124	134	142	145	147	144	138
100	126	136	144	147	148	145	139
101	127	138	146	148	149	146	140
102	129	139	148	150	151	147	142
103	130	141	150	151	152	148	143
104	132	144	152	152	154	149	145
105	134	146	154	154	155	150	146
106	136	148	156	155	157	151	148
107	138	151	158	157	158	153	149
108	140	153	161	159	159	154	151
109	142	156	163	160	161	156	154
110	144	159	166	162	162	157	157
111	146	161	169	163	163	160	160
112	148	164	172	165	165	162	162
113	151	167	175	167	167	164	165
114	153	170	178	169	167	167	168
115	156	173	181	171	169	169	171
116	159	177	184	173	170	172	173
117	161	180	187	174	172	174	176
118	164	183	190	176	173	177	179
119	167	186	193	179	175	180	182
120	169	190	197	182	176	183	185
121	172	193	200	186	178	185	188
122	175	196	203	190	180	188	191
123	177	200	207	193	182	191	194
124	180	203	211	197	185	193	197
125	183	208	215	201	189	197	200
126	186	211	219	205	194	200	203
127	189	215	223	209	200	204	207
128	192	219	227	214	206	208	210
129	195	222	231	219	211	212	214
130	199	227	236	223	216	217	218
131	202	230	240	228	220	221	222
132	206	235	245	232	225	225	226
133	209	239	250	237	229	229	230
134	213	244	255	242	234	233	234
135	216	248	259	247	238	238	239
136	220	253	265	251	242	242	243
137	224	258	269	255	247	246	247

Time (min)	TC# 385 (°F)	TC# 386 (°F)	TC# 387 (°F)	TC# 388 (°F)	TC# 389 (°F)	TC# 390 (°F)	TC# 391 (°F)
138	227	263	274	260	251	251	251
139	231	267	279	265	255	255	256
140	236	272	285	269	260	259	261
141	239	278	290	274	264	263	265
142	244	283	296	279	269	268	270
143	248	288	301	283	273	272	274
144	252	294	307	288	277	277	279
145	257	299	312	293	282	281	284
146	261	304	318	298	286	286	289
147	266	310	324	303	291	291	294
148	271	316	330	308	296	296	299
149	276	322	336	313	300	300	305
150	280	328	342	318	305	305	310
151	286	335	348	324	310	310	315
152	291	341	354	329	314	315	321
153	296	347	361	335	319	320	327
154	301	354	368	340	325	325	332
155	307	361	374	346	330	330	338
156	313	368	381	351	335	336	344
157	318	375	388	357	340	341	350
158	324	383	396	363	345	346	356
159	330	390	403	369	351	352	363
160	336	398	410	376	356	357	369
161	342	405	418	382	362	363	376
162	348	413	426	388	367	369	383
163	355	421	433	395	373	375	390
164	362	429	441	401	379	382	397
165	368	437	449	407	385	388	404
166	375	446	457	414	391	394	412
167	382	454	465	421	397	401	419
168	389	463	473	428	403	407	427
169	396	472	482	435	410	414	435
170	404	481	491	442	416	421	442
171	411	490	499	449	423	428	450
172	419	499	508	457	430	435	459
173	426	508	517	464	437	442	467
174	434	518	526	472	444	450	476
175	443	528	536	480	451	458	485
176	451	538	545	487	458	465	493
177	459	548	554	495	465	473	502
178	468	558	564	503	472	481	512
179	476	568	578	511	538	489	521
180	485	578	584	607	488	498	531
Max Temp:	485	578	584	607	538	498	531
Max Allowed:	397	398	398	398	398	398	398

Time (min)	TC# 392 (°F)	TC# 393 (°F)	TC# 394 (°F)	TC# 395 (°F)	TC# 396 (°F)	TC# 397 (°F)
0	73	72	72	71	70	68
1	73	73	72	71	70	68
2	73	73	72	71	70	68
3	73	72	72	71	70	68
4	73	72	72	71	70	68
5	73	72	72	71	70	68
6	73	73	72	71	70	68
7	73	72	72	71	70	68
8	73	72	72	71	70	68
9	72	72	72	71	70	68
10	73	72	72	71	70	68
11	73	72	72	71	70	68
12	72	72	72	71	70	68
13	73	73	72	71	70	68
14	73	73	71	71	70	68
15	73	72	72	71	70	68
16	73	73	71	71	69	68
17	73	72	71	71	69	68
18	73	72	72	71	70	68
19	73	72	72	70	69	68
20	72	72	71	71	69	68
21	72	72	71	71	70	68
22	73	72	71	71	69	68
23	73	72	72	71	70	68
24	73	73	71	71	69	68
25	73	72	72	71	70	68
26	73	73	71	71	70	68
27	73	72	71	71	69	68
28	73	72	71	71	70	68
29	73	73	71	71	70	68
30	73	72	71	71	70	68
31	73	73	72	71	70	68
32	73	72	71	71	70	68
33	73	72	72	71	70	68
34	73	73	71	71	70	68
35	73	73	72	70	70	68
36	73	73	72	71	70	68
37	73	73	72	71	70	68
38	73	72	72	71	70	68
39	73	73	72	71	70	68
40	73	72	72	71	70	68
41	73	72	72	71	70	68
42	73	73	72	71	70	69
43	74	73	72	71	70	69
44	73	73	72	72	70	69
45	74	73	72	71	70	69

Time (min)	TC# 392 (°F)	TC# 393 (°F)	TC# 394 (°F)	TC# 395 (°F)	TC# 396 (°F)	TC# 397 (°F)
46	74	73	72	71	70	69
47	74	73	73	71	70	68
48	74	73	72	71	70	68
49	74	74	72	71	70	69
50	75	74	73	71	71	69
51	75	74	73	72	70	69
52	76	75	73	72	71	69
53	76	75	74	72	71	69
54	76	75	74	72	71	70
55	77	76	74	73	71	70
56	77	76	74	73	71	70
57	78	76	74	73	71	69
58	78	76	75	73	71	70
59	79	77	75	74	71	70
60	80	78	76	74	72	70
61	80	78	76	74	72	70
62	81	79	76	75	72	71
63	81	79	77	75	73	71
64	83	80	77	75	73	71
65	83	80	78	76	73	71
66	84	81	78	76	73	71
67	85	81	78	76	74	71
68	86	82	79	77	74	71
69	87	83	80	77	74	72
70	88	83	80	78	75	72
71	90	84	81	78	75	72
72	90	85	81	79	75	72
73	91	86	83	79	76	72
74	92	87	83	80	76	73
75	94	87	84	81	76	73
76	95	88	84	81	77	73
77	96	89	85	82	77	74
78	97	90	86	82	78	73
79	99	91	87	83	78	74
80	100	93	88	84	79	74
81	102	94	89	85	79	74
82	103	95	90	85	80	75
83	104	96	91	86	81	75
84	106	98	92	87	81	75
85	107	99	93	88	82	76
86	108	100	94	89	82	77
87	110	102	96	90	83	77
88	112	103	97	91	84	77
89	114	105	98	92	85	78
90	116	106	100	94	86	78
91	117	108	101	94	86	78

Time (min)	TC# 392 (°F)	TC# 393 (°F)	TC# 394 (°F)	TC# 395 (°F)	TC# 396 (°F)	TC# 397 (°F)
92	118	109	102	95	87	79
93	119	110	103	96	87	79
94	121	113	106	98	88	80
95	123	114	107	99	89	80
96	124	115	108	100	90	80
97	126	117	110	102	91	81
98	128	119	111	103	92	82
99	129	120	113	104	93	82
100	131	122	114	106	93	82
101	133	124	116	107	95	83
102	134	126	117	108	96	84
103	136	128	119	109	96	84
104	139	129	121	111	98	85
105	140	131	123	112	99	85
106	142	133	124	114	100	86
107	144	135	126	115	101	86
108	146	137	128	117	102	87
109	149	139	129	118	103	87
110	151	141	131	120	104	88
111	153	143	133	121	105	89
112	156	146	135	123	106	89
113	159	148	137	124	107	90
114	161	150	138	126	108	91
115	165	152	141	128	109	92
116	166	154	143	129	111	92
117	169	157	145	131	112	93
118	171	159	147	132	113	93
119	174	161	149	134	114	94
120	177	163	151	136	116	95
121	180	166	153	138	117	96
122	183	168	155	139	118	96
123	185	171	157	140	119	97
124	188	173	159	142	120	98
125	191	176	161	144	122	98
126	195	178	164	146	123	99
127	198	181	166	148	124	100
128	201	184	168	150	126	101
129	204	187	170	152	127	101
130	207	189	173	153	129	102
131	211	192	175	155	130	103
132	214	195	177	157	131	104
133	218	198	179	159	132	104
134	221	200	182	161	134	105
135	226	204	184	163	135	105
136	229	206	187	165	136	107
137	233	210	189	167	138	107

Time (min)	TC# 392 (°F)	TC# 393 (°F)	TC# 394 (°F)	TC# 395 (°F)	TC# 396 (°F)	TC# 397 (°F)
138	237	213	192	169	139	108
139	241	216	194	171	140	108
140	246	219	197	173	142	110
141	249	222	199	174	143	110
142	254	226	202	177	145	111
143	259	229	205	179	146	112
144	263	233	207	181	148	113
145	268	236	210	183	149	113
146	272	239	213	185	151	114
147	277	243	215	187	152	115
148	282	247	218	189	154	116
149	287	250	221	191	155	116
150	292	254	224	193	157	117
151	297	258	227	195	158	118
152	303	262	230	197	160	119
153	308	266	232	200	161	120
154	314	270	235	202	163	121
155	319	274	238	204	164	121
156	325	278	241	206	166	122
157	331	282	245	209	168	123
158	337	286	247	210	169	124
159	343	290	250	213	170	125
160	350	295	253	215	172	126
161	356	299	257	217	174	126
162	363	304	260	220	175	127
163	370	308	263	222	177	128
164	376	313	266	224	179	129
165	383	318	270	227	180	130
166	390	322	273	229	182	131
167	398	327	276	231	183	132
168	405	332	280	234	185	133
169	412	337	283	236	187	133
170	420	342	286	239	189	134
171	428	347	290	241	190	135
172	436	353	294	244	192	136
173	444	358	297	246	194	137
174	452	363	301	249	196	138
175	460	369	305	251	197	139
176	469	374	308	253	199	140
177	478	380	312	256	201	141
178	486	386	316	259	203	142
179	495	392	320	261	204	142
180	505	398	324	264	206	144
Max Temp:	505	398	324	264	206	144
Max Allowed:	398	397	397	396	395	393

Appendix E

HEMYC INSTALLATION PROCEDURES

SANDIA TEST NUMBER 3

FABRICATION AND INSTALLATION CLARIFICATIONS

1. 2 layers of 2" Kaowool were wrapped completely around both hangers on Junction Box 3I and secured with _" stainless steel bands on 6" maximum centers. The Three Hour MT Barrier Wrap was then installed on the Junction Box and the covered assembly was mounted on the insulated supports to eliminate any possible heat transfer from the hangers to the Box.
2. Wrap assembly only extended 4" to 5" above the top of the Test Deck on the 90° side of 3C, 3D, 3E, 3F and the radius side of 3F. The Wrap only extended 3" above the Test Deck on the radius side of 3E. An additional 6" wide outer pad (3E-11) was field fabricated and installed at the top of the 3E radius.
3. Pad 3D-1 was relabeled and used as 3E-1.
4. Installed 4" of Kaowool into the end of the unistrut hanger (3G) coverage. Closed gaps around the end of the coverage on 3G and 3H with small amounts of Kaowool.
5. Mitered joints with no diagonal shiplaps were installed on all 90° LBs (Lateral Bend Fittings) on inside and out side layers. Shiplaps were incorporated on the vertical, horizontal and circumferential joints.
6. All inner layer pads for 3E and 3F and pads 3A-7 and 3D-1 were fabricated and installed with only 2" shiplap joints.
7. A patch of Refrasil cloth was installed on the horizontal underside of 3B and on the vertical radius of 3A. A few other minor scuffs or tears were stitched in other areas. A small amount of Kaowool was installed in outer layers gaps(less than _").
8. The inner layer of the cable drop 3J starting approximately 30" down from the test deck on both vertical sections and running through the two radiuses was installed using 2 separate layers of 2 miters made of 1 _" Kaowool pads on each radius. No off sets or shiplaps were incorporated into the installation. The stainless steel foil was installed with 2" minimum offsets and 6" circumferential overlaps. The Alumina Trihydrate Pads were installed with 2" offsets from the inner and outer layers. The outer layer was installed with 2 miters per radius. Pads 3J-13 and 3J-16 were field modified to reduce the width by 2".
9. All outer pads for hangers 3G and 3H were field modified to reduce the circumference by 4".
10. _" stainless steel bands were used to secure the Junction Box to the hangers.

ISSUE DESIGNATION IN THIS COLL INDICATES CURRENT CHANGE

FABRICATION OF HEMYC PROTECTIVE WRAP SYSTEM COMPONENTS

1.0 PURPOSE

The purpose of this procedure is to assure that the fabrication of the HEMYC Cable Protection System Components is consistent with the system components as tested in the various qualification tests. The Fire Qualification Test, referenced as CTP-1026, consisted of a One (1) Hour Fire Exposure, per ASTM E-119 criteria, including hose stream in accordance with the American Nuclear Insurers Information Bulletin No. 5(79) entitled, "ANI/MAERP Standard Fire Endurance Test Method to Qualify a Protective Envelope for Class Circuits".

2.0 SCOPE

This procedure provides the methods and guidelines for the fabrication of both cable tray and conduit protection system components. The fabrication and quality verification shall be performed on-site by Client personnel that have been trained and certified by PROMATEC.

3.0 REFERENCE

3.1 10CFR50, Appendix R

3.2 ANI Bulletin No. 5(79)

3.3 HEMYC Fire Qualification Test, CTP-1026

3.4 ANI Acceptance dated 08/02/82

3.5 QCP-10001, Packaging, Shipping, Receiving, Handling and Storage for HEMYC Protective Wrap Components

3.6 QCP-10002, Fabrication Inspection for HEMYC Protective Wrap Components

3.7 HEMYC Protective Wrap System Typicals, PROMATEC Drawings B-310, B-311, B-312 and B-313

4.0 DEFINITIONS

None

5.0 RESPONSIBILITIES

5.1 The authorized Installer's ENGINEERING DEPARTMENT shall be responsible to define the scope of work as prescribed on the applicable contract documents and to provide the applicable drawings, specifications, requirements, instructions, etc., to the department responsible for fabrication and installation.

ISSUE DESIGNATION IN THIS COLL .NDICATES CURRENT CHANGE

This department shall also be responsible to provide liaison with applicable client personnel and other internal departments to assure a smooth flow of communication.

5.2 The authorized Installer's PRODUCTION DEPARTMENT shall be responsible for the identification and scheduling of work to be performed as defined on the documents furnished by ENGINEERING.

The Installer's FABRICATION DEPARTMENT, as trained and certified by PROMATEC, shall be responsible for the initiation of appropriate Fabrication Orders, verify their authenticity, initiate appropriate procurement documents and provide these documents to the fabrication facility.

5.3 The Installer's QUALITY CONTROL PERSONNEL, as trained and certified by PROMATEC, shall be responsible for appropriate inspection, documentation and monitoring.

6.0 PROCEDURE

6.1 Only approved materials as listed below shall be utilized in the fabrication of HEMYC Cable Protection System Components.

ACCEPTABLE MATERIALS

6.1.1 External Fabric

A. Siltemp WR84CSR, Thermal Barrier Cloth, 0.030 nom. thickness, 18oz/yd^2

B. or Approved equal

6.1.2 Internal Fabric

A. Klever 600/6 or J.P. Stevens #332 Fiberglass Cloth, 49" width, 13oz/yd^2

B. or Approved equal (Internal fabric may be used on the non-fire side of protective blanket as necessary. If used, external fabric must overlap a minimum of six (6") inches on to non-fire side.

6.1.3 Internal Filler

A. Johns-Manville Cerablanket
6 or 8 lb density
0.5, 1.5 and/or 2.0 inch thickness

OR

B. Babcock & Wilcox Kaowool Ceramic Fiber Blanket
6 or 8 lb density
0.5, 1.5 and/or 2.0 inch thickness

OR

C. Approval equal

6.1.4 Thread

A. Astroquartz sewing thread Type Q-24 Teflon coated; approximately .020" diameter
Breaking Strength -- 20 lbs

OR

B. Alphaquartz sewing thread Type Q-24 Teflon coated; approximately .020" diameter
Breaking Strength -- 20 lbs

OR

C. Approved equal

6.2 Fabrication Order (Form QC-59)

6.2.1 The completed Fabrication Order (Form QC-59) shall be provided to the fabrication facility.

6.2.2 This form shall define information as listed below:

A. Fabrication Order

B. Blanket Number

C. Project Number

D. Project Name

E. Location -- building, room, elevation

F. Drawing Reference

G. Blanket Length

H. Width

I. Thickness ___0.5", ___1.5", ___2"

J. Tray Identification

K. Conduit Identification

L. Other -- General comments, description, etc.

M. Sketch -- Brief sketch as required

N. Client Acceptance

ISSUE DESIGNATION IN THIS COLL INDICATES CURRENT CHANGE

O. Certification

P. Ordered by and Date

Q. PROMATEC QA/QC Acceptance and Date

If any information is not required, N/A shall be inserted in the applicable area.

6.3 Manufacture of Protective Wrap Components

6.3.1 Initial Envelope Assembly (Figure 1)

6.3.1.1 Cut external and internal (if required) fabrics to proper dimensions - as defined by fabricator to assure proper finished dimensions as specified on the applicable fabrication order. As applicable, fabricator shall measure from the "finished" edge of fabrics not the "factory" edge.

6.3.1.2 Double stitch external and internal fabrics together as shown in Figure 1. If only external fabric is used double stitch fabric together as shown in Figure 1A.

6.3.1.3 Double stitch one end of blanket as shown in Figure 2/2B, if applicable. Fabricator may elect to insert blanket prior to closure of either end. In this case, refer to Item 6.3.3.2 for instructions.

During fabrication of wraps it may be necessary to use staples, pins or clips to hold fabrics together while sewing. These may remain within the system but shall not damage or be detrimental to the wrap.

6.3.1.4 Turn envelope assembly inside out to hide exposed rough edges of fabric and provide a "finished" seam appearance.

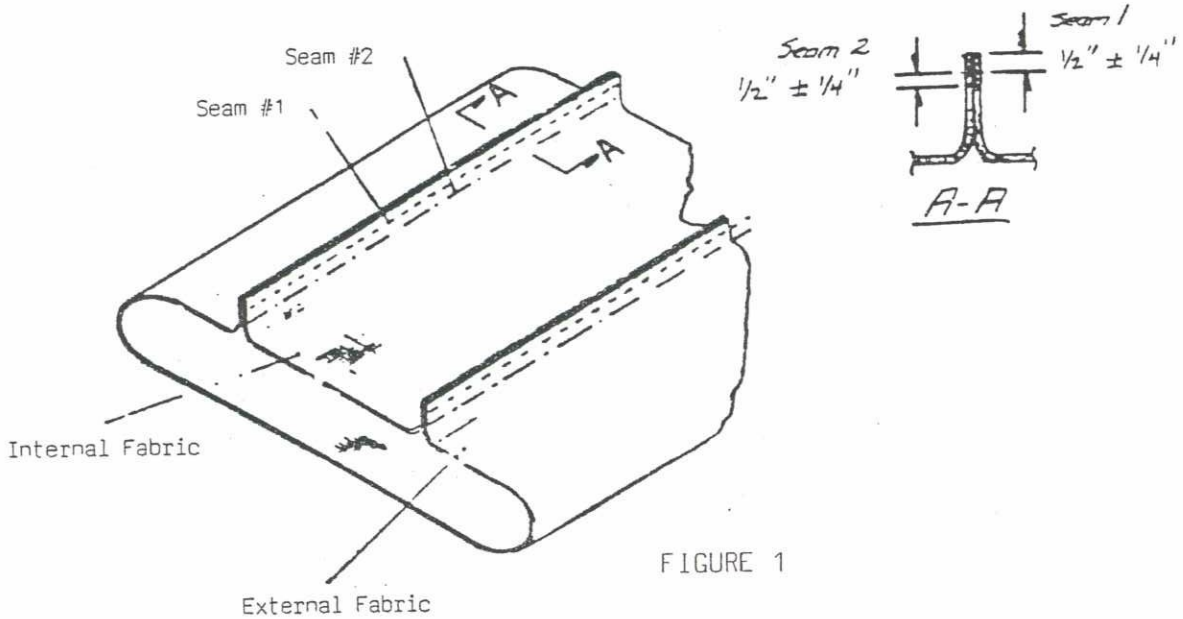

FIGURE 1

ISSUE DESIGNATION IN THIS COLI INDICATES CURRENT CHANGE

ISSUE DESIGNATION IN THIS COLL .DICATES CURRENT CHANGE

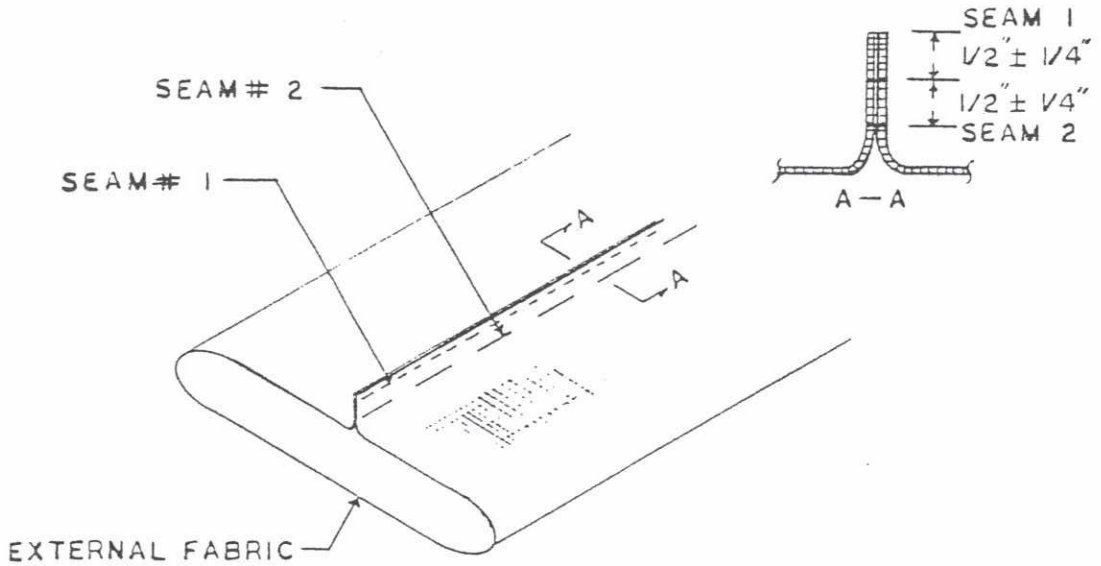

FIGURE 1A

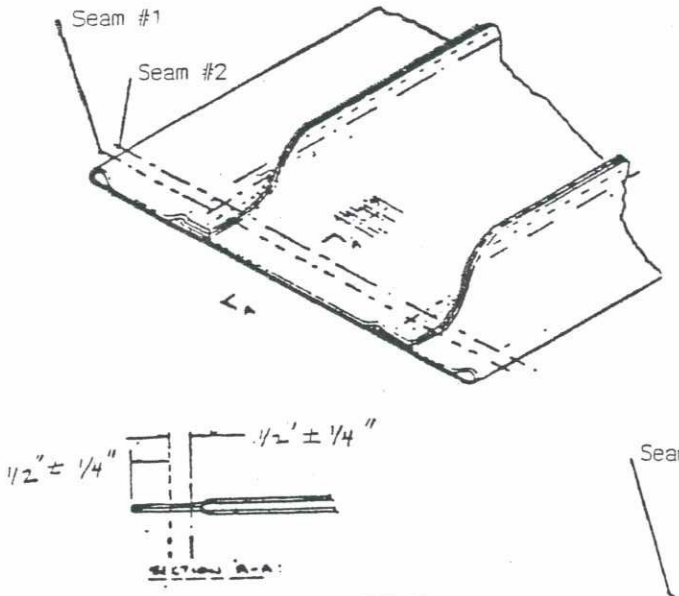

FIGURE 2

OR

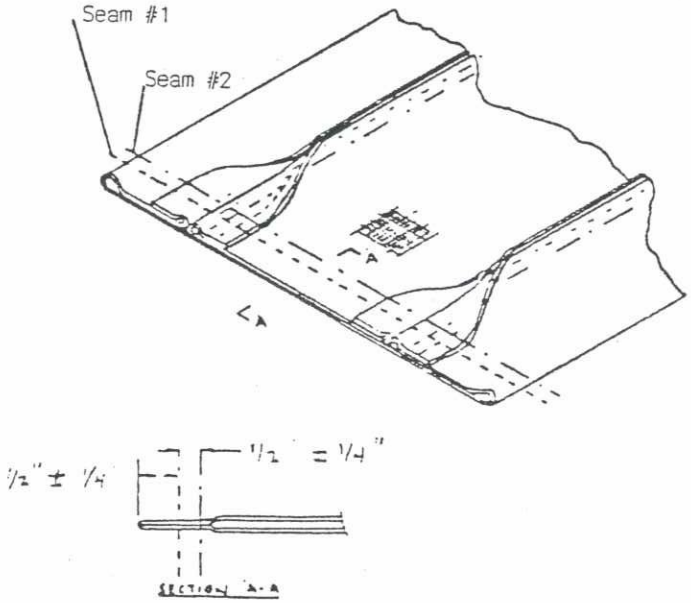

FIGURE 2B

ISSUE DESIGNATION IN THIS COLL INDICATES CURRENT CHANGE

6.3.2 Insertion of Filler Material

6.3.2.1 Cut filler material to proper size (as defined by fabricator to assure proper finished dimension) 0.5" thick - HEMYC Wrap; 1.5" thick - Cable Tray; 2" thick - Conduit.

6.3.2.2 Multiple pieces of filler material may be required to fabricate wraps. To prevent joint gaps in filler material, trim pieces as shown in Figure 3 and secure "darts" spaced on maximum nine (9") inch centers for two (2") inch blankets or four (4") inch hand sewn seam (See Figure 4) for 0.5" and 1.5" blankets. Darts or seam shall be placed parallel to overlap pieces a minimum six (6") inches = 1" from center line of overlap.

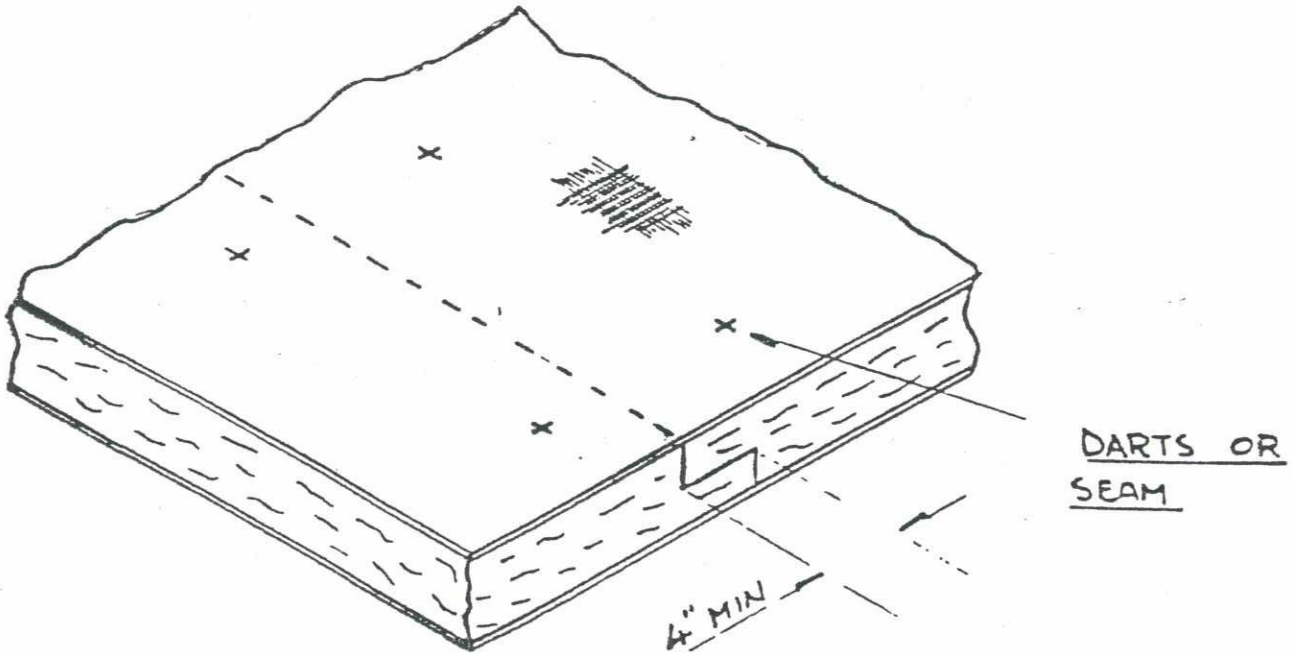

FIGURE 3

6.3.2.3 Insert filler material inside envelope assembly assuring that filler material is kept flat and occupies the entire interior of the envelope and is relatively tight.

6.3.2.4 If filler material has a tendency to "bunch up" during installation, the fabricator shall smooth by hand or use other means to assure total fill. Method used shall not cause damage or be detrimental to the Wrap System.

NOTE: If filler material appears to be too large creating "puckers" at

stitches, remove filler material and trim as necessary.

6.3.3 Completion of Envelope Assembly

6.3.3.1 Roll under fabric at open end and double stitch as shown in Figure 4A.

6.3.3.2 If both ends were left open until insertion of filler material, both ends shall now be closed as shown in Figure 4A.

6.3.4 Longitudinal Stitching

6.3.4.1 Longitudinal stitching shall be performed as shown in Figure 4. When multiple widths of filler material are required (Item 6.3.2.2) a minimum of two (2) rows of longitudinal stitches must be in each multiple width.

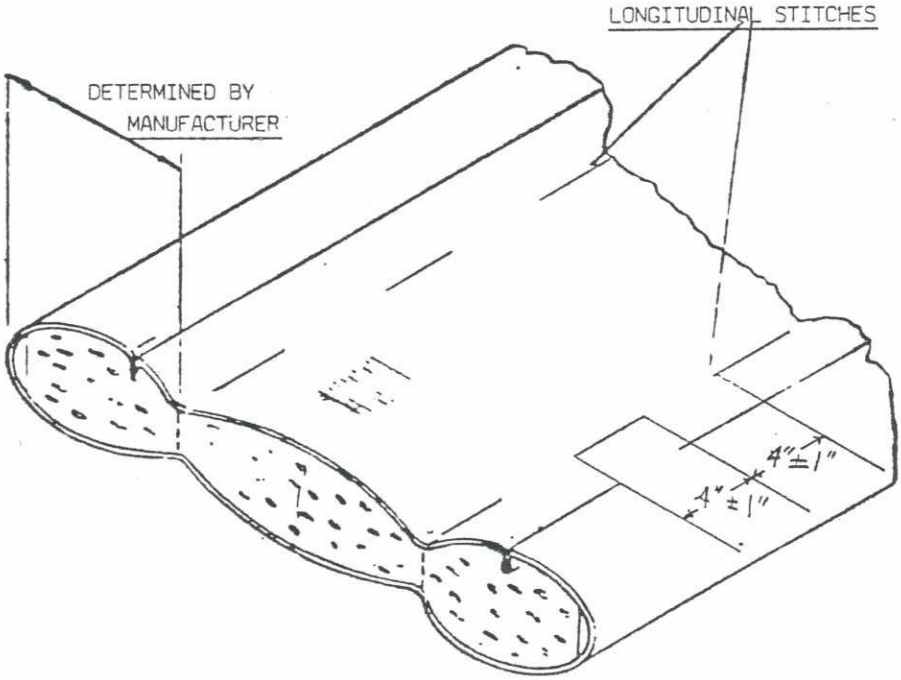

FIGURE 4
Typical Section Through Blanket

ISSUE DESIGNATION IN THIS COLI INDICATES CURRENT CHANGE

ISSUE DESIGNATION IN THIS COLU NDICATES CURRENT CHANGE

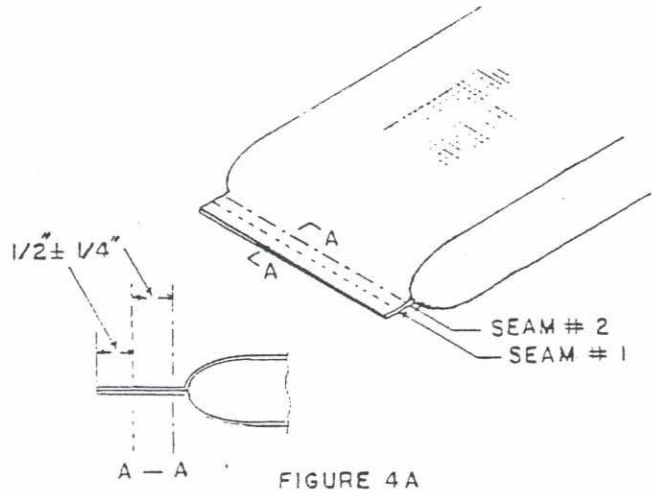

FIGURE 4A

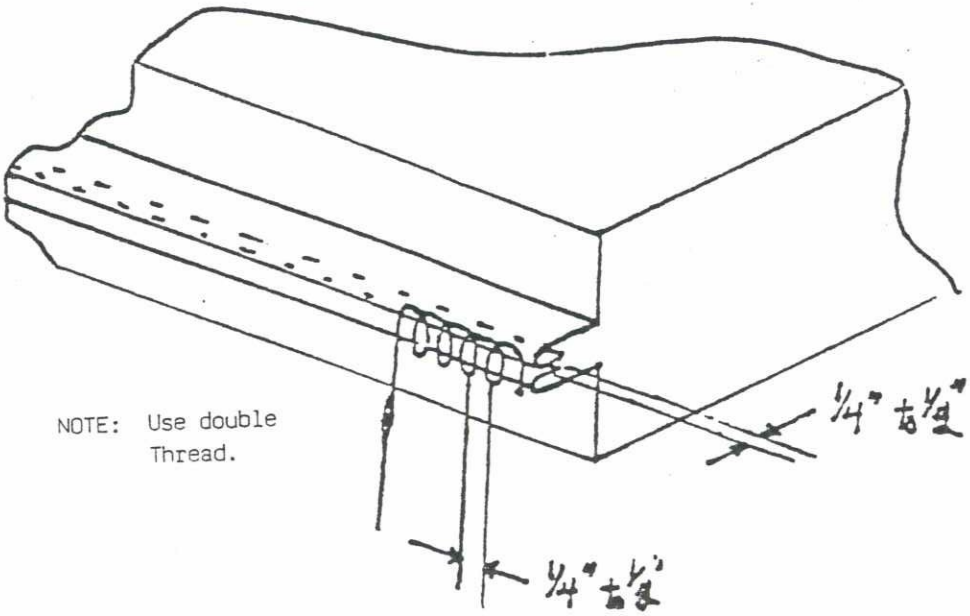

FIGURE 4B
ALTERNATE BLANKET CLOSURE
HAND SEWN METHOD

6.3.4.2 The specific placement of the longitudinal stitches is at the discretion of the fabricator.

6.3.4.3 Darts or similar may be used instead of longitudinal seams to secure the filler material in position. Refer to Figure 5.

6.3.4.4 The following requirements shall be complied with for darting/stitching to secure the filler material in position for HEMYC Blankets:

A) Any blanket with a circumferential dimension of sixteen (16") inches or less need not be darted if the filler material is of one piece.

B) Any blanket with a circumferential dimension of more than sixteen (16") inches but less than twenty-four (24") inches shall have at least one row of darts/stitches. Every multiple of eight (8") inches in that same dimension shall require an additional row of darts/stitches thereafter. Blankets with multiple pieces of filler material shall have at least one row of darts/stitches per piece.

C) For stitching to secure filler material the distance, in length, between stitches shall not exceed four (4") inches. For darts the distance shall not exceed nine (9") inches.

D) Equidistant placement of darts across the circumferential dimension is required unless there are multiple pieces of filler material, then the requirements of Item B above also apply.

E) All tolerances in darting/stitching shall be ± 1/4 inch.

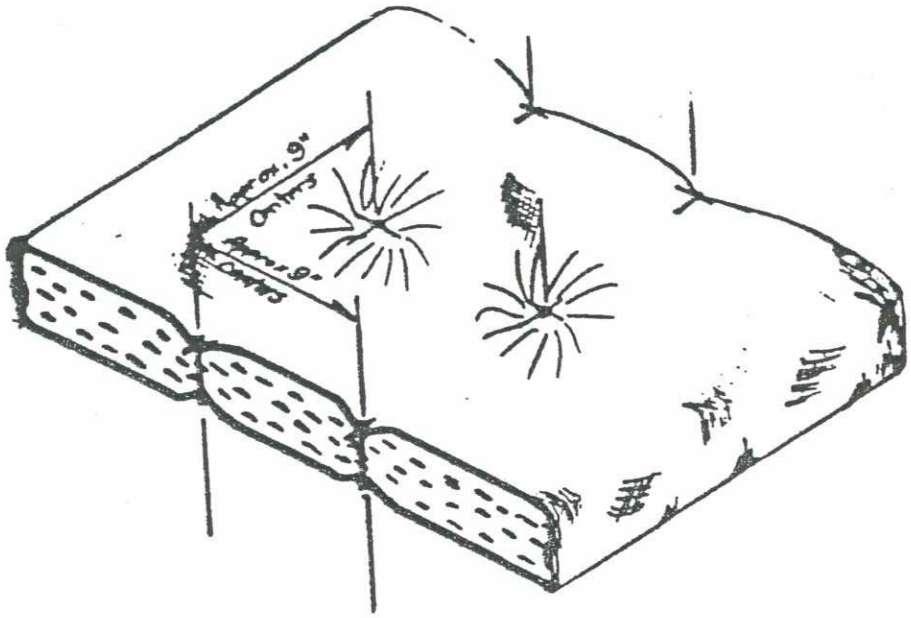

FIGURE 5

ISSUE DESIGNATION IN THIS COL INDICATES CURRENT CHANGE

C

6.4 Fabricator Inspector

6.4.1 The fabricator shall assure that the completed wrap assembly conforms to the requirements specified on the applicable fabrication order.

6.4.2 This inspection by fabricator shall be in addition to verification by QC as defined in QCP-10002.

6.5 Identification Markings

6.5.1 Identification markings shall be placed on each wrap assembly at a minimum of two locations.

A) In close proximity to one of the lengthwise edges on the exposed surface.

B) In close proximity to one of the ends on the exposed surface.

C. Various project requirements may specify that this marking is also provided on the interior (non-fire) surface.

6.5.2 These markings shall be the blanket number as defined on the applicable fabrication order.

6.5.3 Markings shall be of a waterproof paint or ink which will retain the marking, withstand weathering deterioration, and other handling effects and shall not be deleterious to the fabric.

6.5.4 These markings shall be in characters no less than three-fourths (3/4") inches (19mm) high.

7.0 ATTACHMENTS

None

ISSUE DESIGNATION IN THIS COLI ..NDICATES CURRENT CHANGE

PROMATEC

PROGRESSIVE MATERIALS AND TECHNOLOGIES, INC.

PROCEDURE FOR:	PROCEDURE NUMBER:
INSTALLATION OF HEMYC PROTECTIVE WRAP SYSTEM ONTO SINGLE OR MULTIPLE CONDUITS	IP-8400.103

PROCEDURE ISSUE SUMMARY

ISSUE/DATE	PREPARER	APPROVED	COMMENTS
F ISSUE 01/25/95	L.C. Spriggs	R.J. Block	Revised as noted. Issue for use.
G ISSUE 08/16/95	L.C. Spriggs	R.J. Block	Revised as noted. Issue for use.

ISSUE DESIGNATION IN THIS COLL NDICATES CURRENT CHANGE

INSTALLATION OF HEMYC PROTECTIVE WRAP SYSTEM ONTO SINGLE OR MULTIPLE CONDUITS

1.0 PURPOSE

The purpose of this procedure is to assure that the installation of the HEMYC Protective Wrap System is consistent with the system as tested on the various qualification tests. The Fire Qualification Test, referenced as CTP-1026, consisted of a One (1) Hour Fire Exposure, per ASTM E-119 criteria, including hose stream test in accordance with the American Nuclear Insurers Information Bulletin No. 5(79) entitled, "ANI/MAERP Standard Fire Endurance Test Method to Qualify a Protective Envelope for Class IE Electrical Circuits".

2.0 SCOPE

This procedure provides the methods and guidelines to be utilized for the installation of HEMYC Protective Wrap Systems for conduits.

3.0 REFERENCE

3.1 10CFR50, Appendix R

3.2 ANI Bulletin 5(79)

3.3 IP-8400.101, Installation of HEMYC Protective Wrap System - Straight Sections of Cable Tray

3.4 IP-8400.102, Installation of HEMYC Protective Wrap System - Curved Sections of Cable Tray

3.5 QCP-10001, Packaging, Shipping, Receiving, Handling and Storage for HEMYC Protective Wrap Components

3.6 QCP-10002, Fabrication Inspection for HEMYC Protective Wrap Components

3.7 QCP-10003, Installation Inspection Criteria for HEMYC Protective Wrap Components

3.8 HEMYC Protective Cable Wrap System Typicals; PROMATEC Drawings B-310, B-311, B-312 and B-313

3.9 IP-8400.106, Installation of Fire Stops and Terminations Within the HEMYC Protective Wrap System for Cable Tray(s) and Conduits

ISSUE DESIGNATION IN THIS COLL INDICATES CURRENT CHANGE

4.0 DEFINITIONS

4.1 **CLIP** - sheet metal clip used to hold Wrap System onto finger strap.

4.2 **COLLAR** - a blanket used at wrap joints on conduit in place of wrap overlay.

4.3 **CONDUIT STANDOFF** - bracket used to allow two (2") inch airspace between conduit and blanket.

4.4 **FINGER STRAP** - thin, sheet metal strapping with pre-punched sections that may be bent out to provide anchoring for Wrap System.

4.5 **CLAMP/BANDING** - stainless steel or galvanized hose type clamp or banding. Hose clamps shall be a minimum gauge of .015" and a minimum width of one-half (1/2") inch.

4.6 **FLEX CONDUIT** - Non-rigid conduit that shall be covered using procedure IP-8400.112 for cable drops.

5.0 RESPONSIBILITIES

5.1 The authorized Installer's ENGINEERING DEPARTMENT shall be responsible to define the scope of work as prescribed on the applicable contract documents and provide the appropriate drawings, specifications, requirements, instructions, etc., to the department responsible for installation.

This department shall also be responsible to provide liaison with applicable client personnel and other internal departments to assure smooth flow of communication.

5.2 The authorized Installer's PRODUCTION DEPARTMENT shall be responsible for the identification and scheduling of work to be performed as defined on the documents furnished by ENGINEERING.

5.3 The Installers, as trained and certified by PROMATEC, shall be responsible for the performance of installation activities herein prescribed.

5.4 The Installer's QUALITY CONTROL PERSONNEL, as trained and certified by PROMATEC, shall be responsible for appropriate inspection, documentation and monitoring.

6.0 PROCEDURE

6.1 Stretch finger strapping along conduit to be protected and bend fingers out away from conduit.

6.2 Holding finger strapping against conduit, attach clamps on approximate eighteen (18") inch centers around conduit and tighten clamps. (See Figure 1.)

G 6.3 Impale wrap onto finger strap. Allow two (2") inch minimum between edge of wrap and fingers as shown on Figure 3.

6.4 Bring rest of wrap around conduit and impale edge of wrap onto fingers over the other edge. (See Figure 2.)

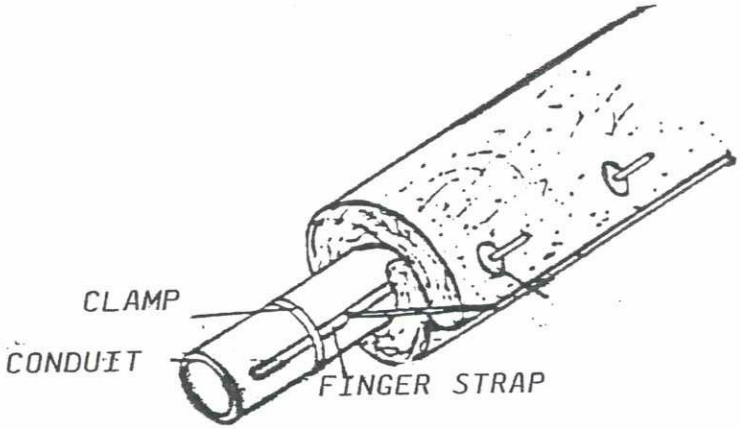

FIGURE 1

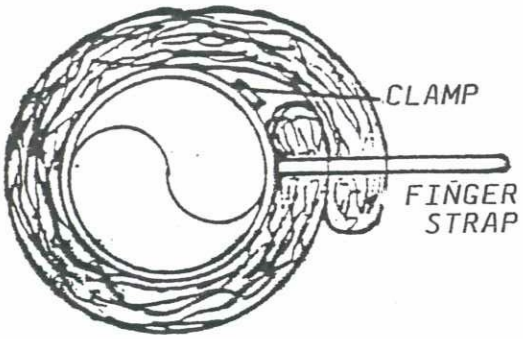

FIGURE 2

6.5 Attach clips onto fingers, compressing wrap approximately one-fourth to one-half (1/4" - 1/2") inch and bend finger over to secure blanket.

6.6 Multiple conduits are similar but only one conduit needs finger strapping. (Reference Figure 3.)

6.7 The number of conduits that may be wrapped is limited by wrap size. Large, bulky wrap sizes should be avoided due to difficulty in handling and possible damage.

If wrap sags excessively below conduit additional finger straps may be attached to centrally located conduits and used for additional wrap support.

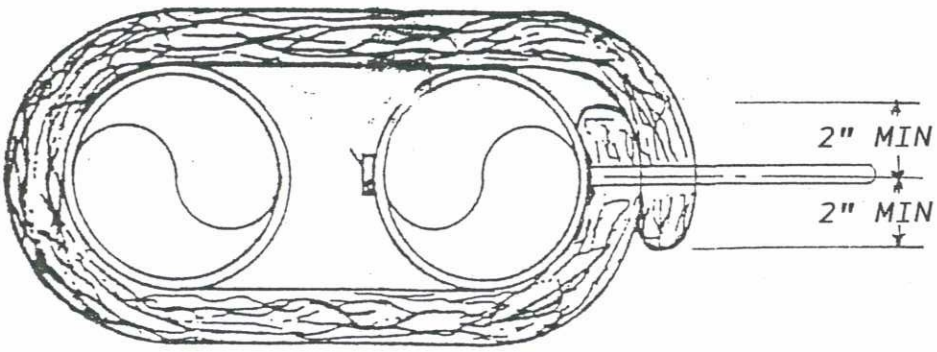

FIGURE 3

ISSUE DESIGNATION IN THIS COLI INDICATES CURRENT CHANGE

G

G 6.8 An alternate method of wrap attachment is to place the wrap around the conduit ensuring that the proper overlap is achieved. The proper overlap is a MINIMUM of two (2") inches for the circumferences of conduits and collars as shown on Fig. 4B. Attach clamps around the wrap to secure wrap to conduit. Clamp spacing shall be placed on maximum nine (9") inch centers.

Tighten clamps until wrap is compressed one-fourth to one-half (1/4" - 1/2") inches. DO NOT OVER-TIGHTEN as distortion of the blanket will result.

If gaps occur at wrap overlap, loosen clamps, shift blanket as necessary and re-tighten clamps.

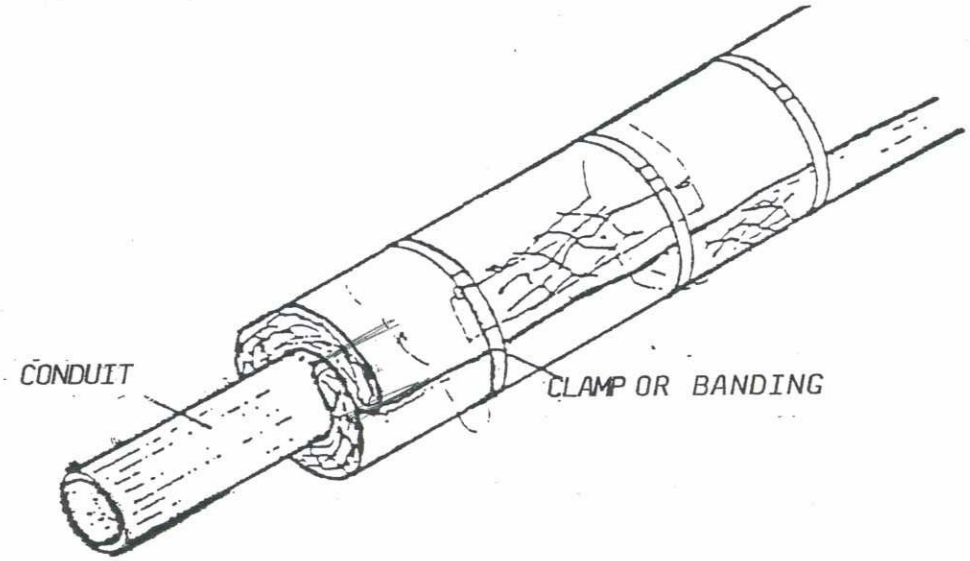

FIGURE 4A

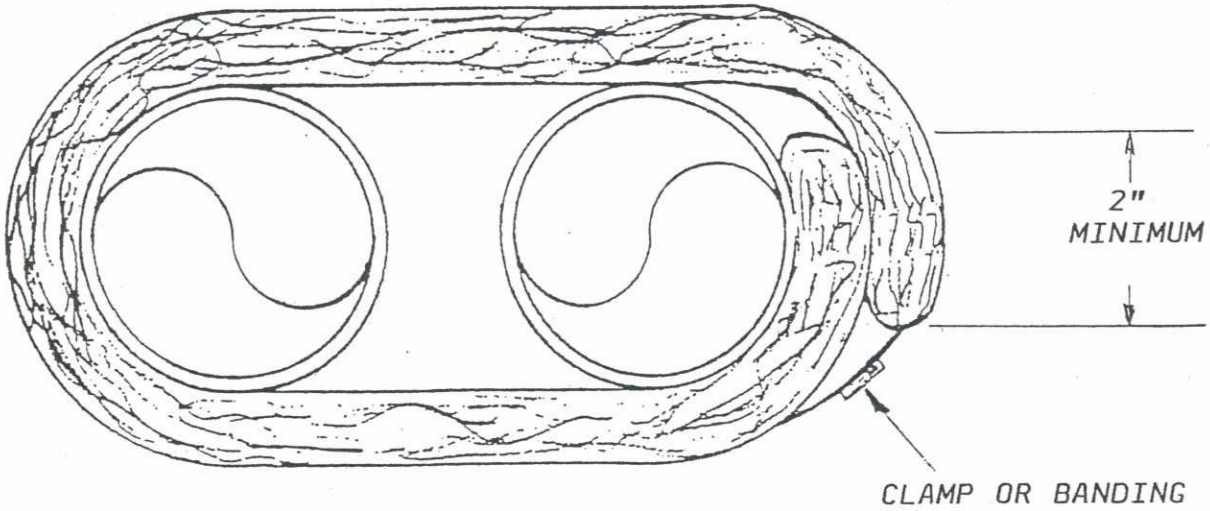

FIGURE 4B

ISSUE DESIGNATION IN THIS COLL NDICATES CURRENT CHANGE

6.9 In areas where ceiling, wall or floor clearances do not allow for wrap thickness, the wrap may be attached using methods and materials outlined in Procedure No. IP-8400.104, Section 6.3.

6.10 One of the two methods as shown in Figures 5 and 6 shall be outlined at wrap joints. Clamps or banding to secure should be installed as shown.

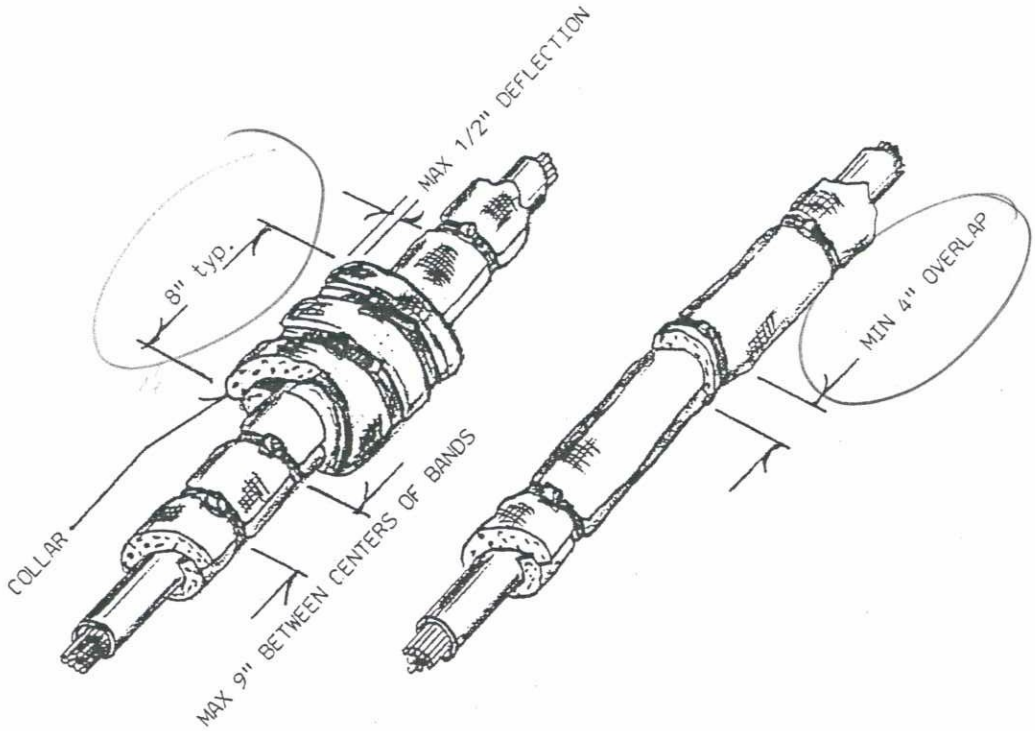

FIGURE 5
Typical Conduit Wrap
(Separate Wrap Style)

FIGURE 6
Typical Conduit Wrap
Joint Detail
(Overlap Type)

6.11 The following method is to be used where two (2") inch standoff bracket is required. Attach conduit standoff to conduit using all thread rod (See Figure 7). Use lock-washer and bolt to secure to conduit.

ISSUE DESIGNATION IN THIS COLU NDICATES CURRENT CHANGE

ISSUE DESIGNATION IN THIS COLL INDICATES CURRENT CHANGE

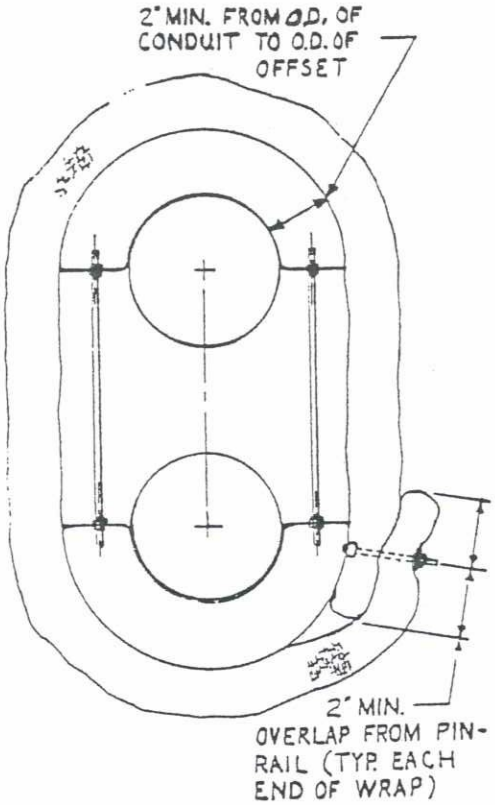

FIGURE 7

6.12 Conduit standoff are to be placed on maximum eighteen (18") inch centers. Attach rail and/or strut using bolts and lockwashers. Stud spacing is on nine (9") inch maximum centers (See Figure 8). Additional pin rail and/or strut may be used as determined by Installer's Site Engineer.

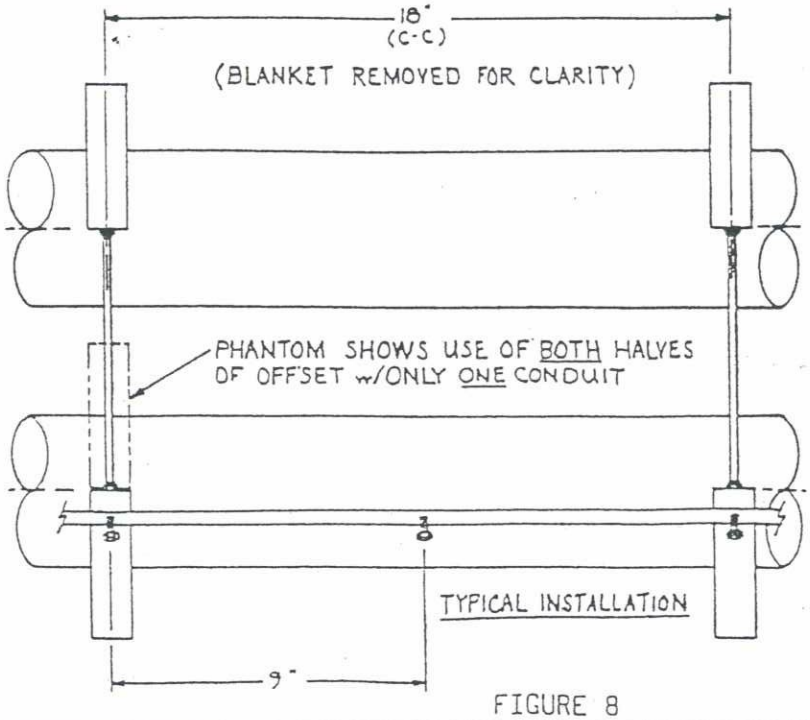

FIGURE 8

6.13 After framework is complete be sure to tighten all bolts.

6.14 Place blanket over studs allowing a minimum two (2") inch overlap from stud to edge of wrap. Bring wrap around standoff and impale edge of wrap onto studs. Allow minimum two (2") inch overlap from stud to edge of wrap. (See Figure 7.)

6.15 Use fender washer locknut to secure wrap to pin rail. Tighten locknut until wrap is compressed one-fourth to one-half (1/4" - 1/2") inch.

6.16 Use termination of system similar to procedure IP-8400.106, Section 6.3 Termination - Conduit (Floor, Ceiling or Wall).

7.0 ATTACHMENTS

7.1 ADDENDUM I

ISSUE DESIGNATION IN THIS COLL NDICATES CURRENT CHANGE

ADDENDUM I
ROCHESTER GAS & ELECTRIC
SITE SPECIFIC
GINNA STATION

4.5 **BANDING** - stainless steel banding shall be a minimum gauge of .015" and a minimum width of three-fourths (3/4") inches with wing seals.

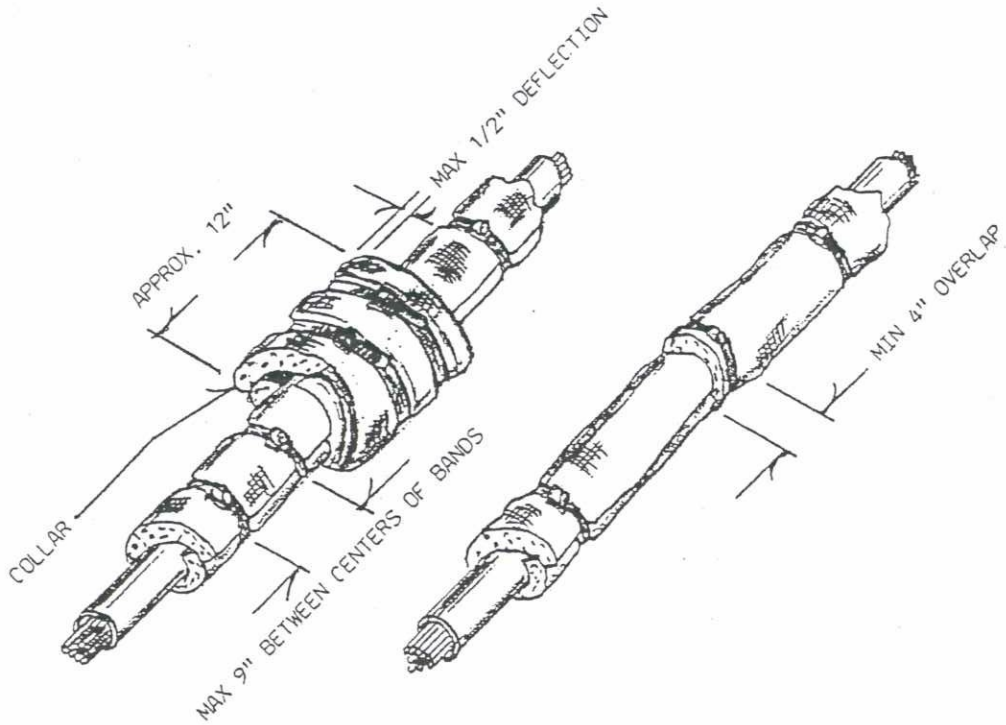

FIGURE 5a
Typical Conduit Wrap
(Separate Wrap Style)

FIGURE 6a
Typical Conduit Wrap
Joint Detail
(Overlap Type)

ISSUE DESIGNATION IN THIS COLL .DICATES CURRENT CHANGE

CONTROL NO. CCN01

PROMATEC

PROGRESSIVE MATERIALS AND TECHNOLOGIES, INC.

PROCEDURE FOR:	PROCEDURE NUMBER:
REPAIR AND INSTALLATION OF HEMYC PROTECTIVE WRAP SYSTEM AROUND INTERFERENCES AND OBSTRUCTIONS	IP-8400.104

PROCEDURE ISSUE SUMMARY

ISSUE/DATE	PREPARER	APPROVED	COMMENTS
F ISSUE 01/25/95	L.C. Spriggs	R.J. Block	Revised as noted. Issue for use.

ISSUE DESIGNATION IN THIS COLUMN DICATES CURRENT CHANGE

REPAIR AND INSTALLATION OF HEMYC PROTECTIVE WRAP SYSTEM AROUND INTERFERENCES AND OBSTRUCTIONS

1.0 PURPOSE

The purpose of this procedure is to assure that the installation of the HEMYC Protective Wrap System is consistent with the system as tested on the various qualification tests. The Fire Qualification Test, referenced as CTP-1026, consisted of a One (1) Hour Fire Exposure, per ASTM E-119 criteria, including hose stream test in accordance with the American Nuclear Insurers Information Bulletin No. 5(79) entitled "ANI/MAERP Standard Fire Endurance Test Method to Qualify a Protective Envelope for Class IE Electrical Circuits".

2.0 SCOPE

This procedure provides the methods and guidelines to be utilized for the repair and installation of the HEMYC Protective Wrap Systems around interferences and obstructions.

3.0 REFERENCE

3.1 10CFR50, Appendix R

3.2 ANI Bulletin No. 5(79)

3.3 HEMYC Test CTP-1026

3.4 QCP-10001, Packaging, Shipping, Receiving, Handling and Storage for the HEMYC Protective Wrap Components

3.5 QCP-10002, Fabric Inspection for HEMYC Protective Wrap Components

3.6 QCP-10003, Installation Inspection Criteria for HEMYC Protective Wrap Components

3.7 HEMYC Protective Cable Wrap System Typicals, PROMATEC Drawings B-310, B-311, B-312 and B-313.

4.0 DEFINITIONS

4.1 **CONCRETE ANCHORS** - site approved anchors such as HILTI or Phillips Wedge Anchors used to hold blanket to walls, ceiling or partitions.

4.2 **NEEDLE** - a needle, curved or straight, capable of handling the thread type noted in these definitions.

4.3 **PLUMBERS TAPE** - flexible metal strip having pre-punched holes running the length

ISSUE DESIGNATION IN THIS COLUMN INDICATES CURRENT CHANGE

of the attached wrap.

4.4 **RETAINER STRAP** - rigid metal strip having pre-punched holes running the length of the attached blanket.

4.5 **THREAD** - fire and heat resistant, quartz type thread such as Alpha Quartz Q-24.

5.0 RESPONSIBILITIES

5.1 The authorized Installer's ENGINEERING DEPARTMENT shall be responsible to define the scope of work as prescribed on the applicable contract documents and provide the appropriate drawings, specifications, requirements, instructions, etc., to the department responsible for installation.

This department shall also be responsible to provide liaison with applicable client personnel and other internal departments to assure smooth flow of communications.

5.2 The authorized Installer's PRODUCTION DEPARTMENT shall be responsible for the identification and scheduling of work to be performed as defined on the documents furnished by ENGINEERING.

F 5.3 The Installers, as trained and certified by PROMATEC, shall be responsible for the performance of installation activities herein prescribed.

F 5.4 The Installer's QUALITY CONTROL PERSONNEL, as trained and certified by PROMATEC, shall be responsible for appropriate inspection, documentation, and monitoring.

6.0 PROCEDURE

6.1 Penetrating Members

6.1.1 Cut affected wrap to a depth sufficient to allow the wrap to be installed around the penetrating member (See Figure 1).

6.1.2 Using quartz thread and proper needle (curved needle suggested), sew the inner portion of the wrap (Siltemp or fiberglass) together around the penetrating member.

6.1.3 Fill any gaps in the ceramic fiber fill with additional fiber and sew the outer Siltemp material together (See Figure 2). Stitches shall be no more than one-half (1/2") inch apart.

6.1.4 Fill any gaps around the penetrating member with ceramic fiber.

F 6.1.5 Cut a four (4") inch wide piece of ceramic blanket and place around the penetrating member with a one to two (1" - 2") inch overlap at the ends. (See Figure 3).

F 6.1.6 A slightly larger section of Siltemp shall be placed over the ceramic blanket and sewn top, sides and bottom to tightly seal the Wrap System (See Figure 4). Stitches shall be no more than one-half (1/2") inch apart. Seal shall be accomplished by sewing/banding the blanket in place. Interfering cable trays may be wrapped as described in Procedure IP-8400.106, Sections 6.1.2

through 6.1.5.

6.1.7 It may not be possible in all cases to get the Siltemp cloth tight against the penetrating member. In these cases ensure that the ceramic blanket is forced tightly against the penetrating member by the Siltemp to prevent flame and/or heat passage into system. Clamps may be used to accomplish this, as necessary.

F 6.1.8 All supports and interferences shall be protected a minimum of four (4") inches measured linearly from the structure being protected.

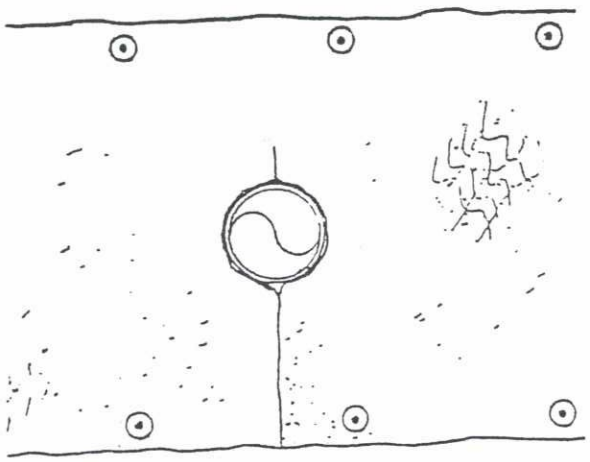

FIGURE 1

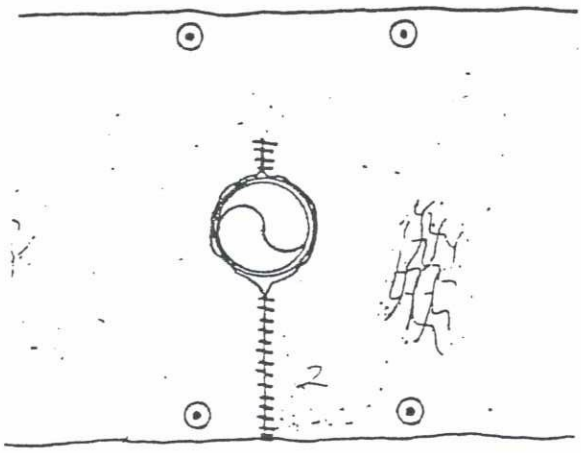

FIGURE 2

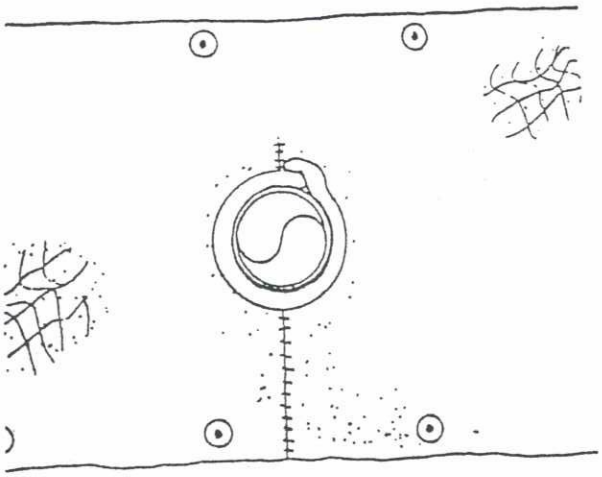

FIGURE 3

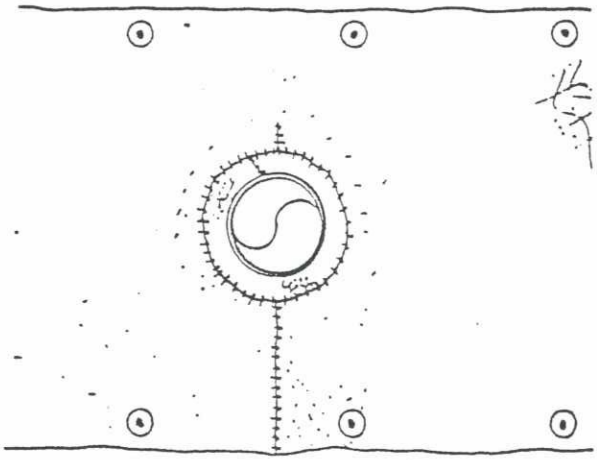

FIGURE 4

6.2 Adjoining or Supporting Members

ISSUE DESIGNATION IN THIS COLUMN INDICATES CURRENT CHANGE

ISSUE DESIGNATION IN THIS COLUMN INDICATES CURRENT CHANGE

F

6.2.1 If possible the adjoining or supporting member should be encapsulated within the system using the procedure outlined in Section 6.1 to seal any openings. (See Figure 5.) In addition, these interfering members may have pin rail banded to them to help secure the wrap. This configuration may be substituted for pin rail studs where top and/or bottom rails meet these interfering members, maintaining nine (9") inch maximum spacing between adjacent pin rail studs. All stud spacings are as measured along the rail.

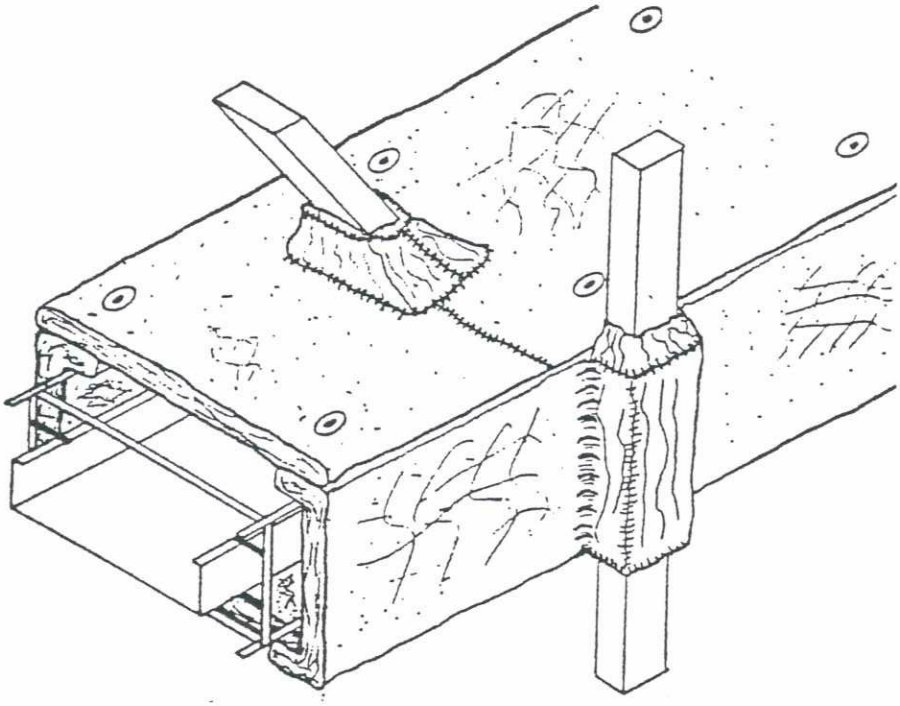

FIGURE 5

6.2.2 Where, due to size, shape or location, the adjoining or supporting member cannot be encapsulated, the Installer's Site Engineer shall determine alternate methods on a case by case basis. Client's Engineer or authorized representative shall review alternate methods, as required. Such alternates shall be within the parameters established by the HEMYC fire testing.

6.3 Wall, Ceiling or Floor Interferences

6.3.1 Where walls, ceilings or floors prevent the installation of the full system, the wraps may be installed as shown in Figure 6. Extra wrap supports may be required as determined by the Installer's Site Engineer.

6.3.2 Framework shall be attached to the interfering surface using concrete anchors and L-Brackets #B-6102 as shown in Figure 6.

ISSUE DESIGNATION IN THIS COLUMN INDICATES CURRENT CHANGE

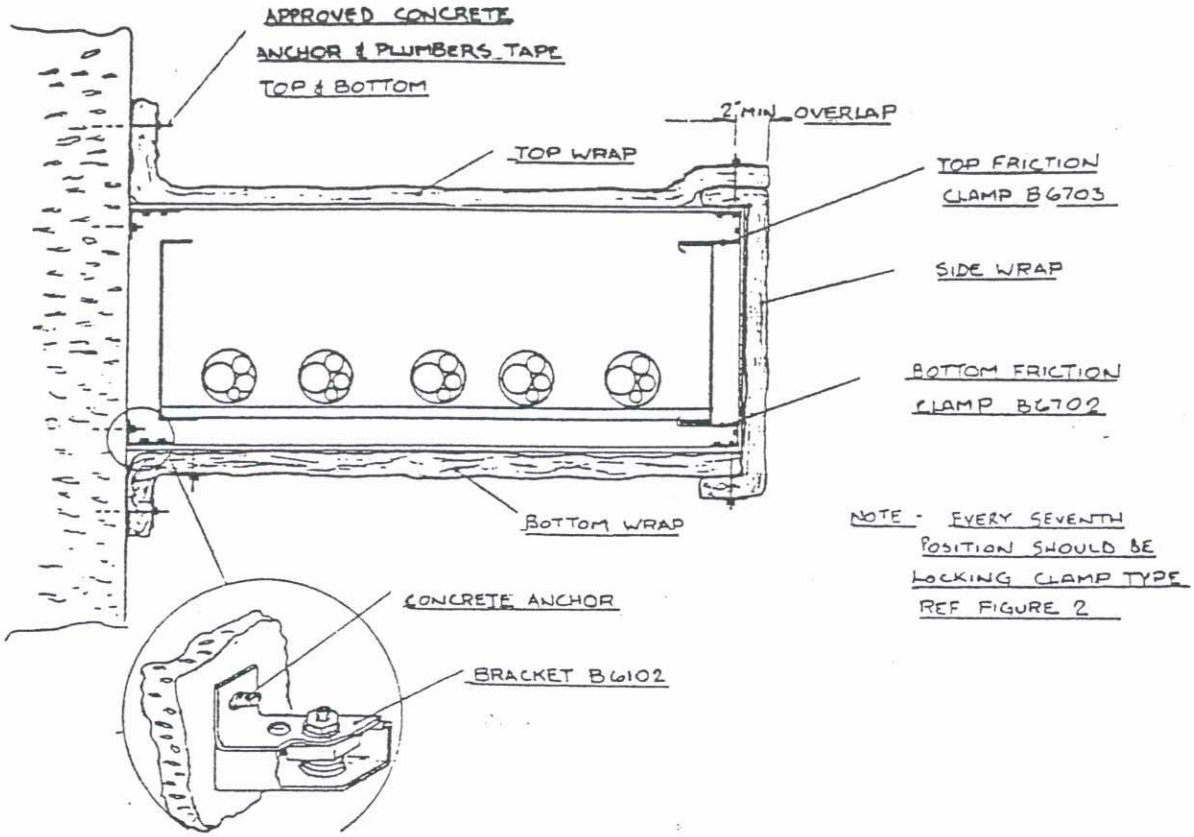

FIGURE 6

6.3.3 Concrete anchors for wrap shall be placed no more than nine (9") inches apart.

6.3.4 Plumbers tape or retainer strap must be installed in the areas where the Wrap System is attached to a wall or ceiling. The plumbers tape or retainer strap is to be installed over the studs after the blanket is installed and prior to the fender washer and locknut. (See Figure 7.) Tape should be kept as tight as possible to prevent the wrap from sagging away from the wall creating a passage for heat and/or flame. Additional holes in plumbers tape or retainer strap may be made as necessary to accommodate variations in stud placement.

F 6.3.5 Where the Wrap System is to be attached to a termination surface (e.g., wall, floor, ceiling, adjoining structure), pin rail may be mounted as an alternative to installing multiple anchor studs.

To attach pin rail to the surface:

- Install a strip of ceramic blanket as a "gasket", between the pin rail and the surface. This blanket strip shall be one-fourth to one-half (1/4" - 1/2") inch thick and at least twice as wide as the rail.

- At least one (1) anchoring stud shall be located at each end of the pin rail.

ISSUE DESIGNATION IN THIS COLUMN INDICATES CURRENT CHANGE

F

Install the end studs one-half (1/2") inches to five (5") inches O.C. from each end.

- For pin rail up to twenty-four (24") inches long use a minimum of two (2) anchoring studs; one at each end.

- For pin rail twenty-five (25") inches to sixty (60") inches long, use a minimum of three (3) studs; each end and one in the approximate middle.

- For pin rails sixty-one (61") inches to one hundred twenty (120") inches long, use a minimum of four (4) studs; each end and another two approximately evenly spaced between the end anchoring studs.

NOTE: Anchoring studs may be site approved concrete anchors, 1/4-20 through-bolts or other engineering approved fasteners.

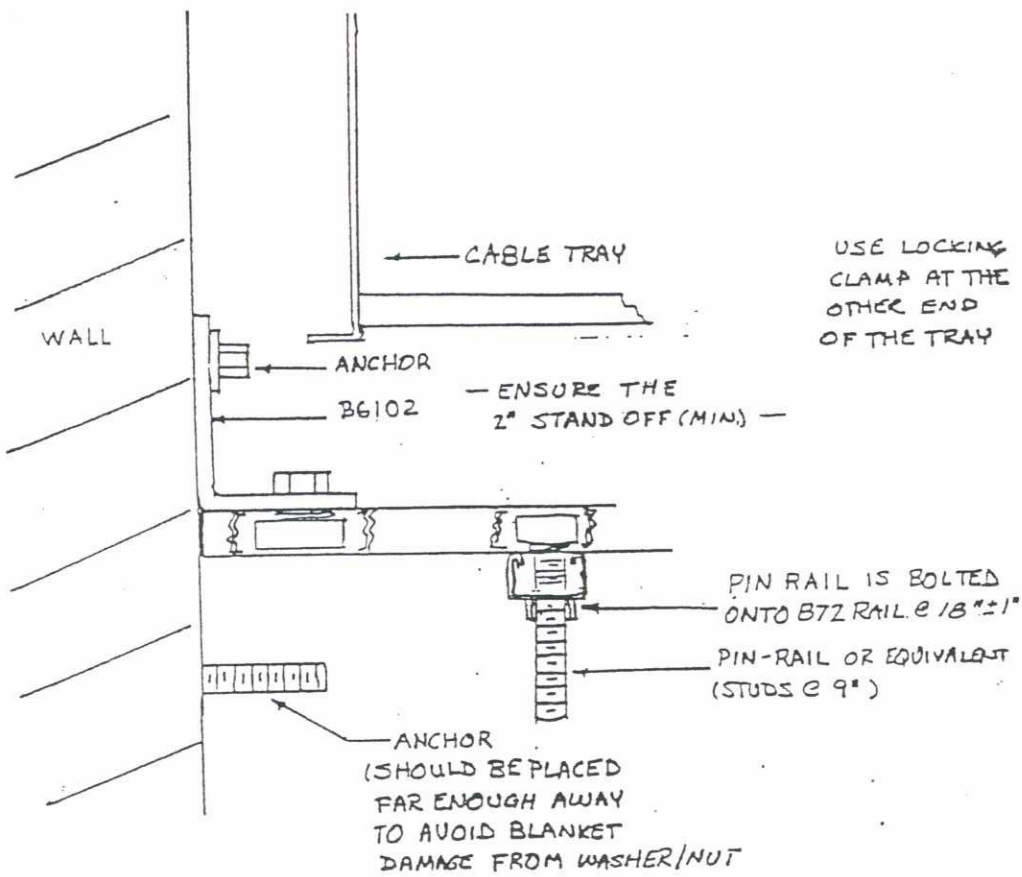

NOTE: IT IS SUGGESTED THAT LOCK WASHERS AND NUTS BE USED ON THE ANCHORS RATHER THAN LOCKNUTS, TO AVOID OVER TORQUING OF ANCHORS

FIGURE 6A
TRAY MOUNTING DETAIL
WALL TO WALL WRAP
BOTTOM SECTION

ISSUE DESIGNATION IN THIS COLUMN DICATES CURRENT CHANGE

F

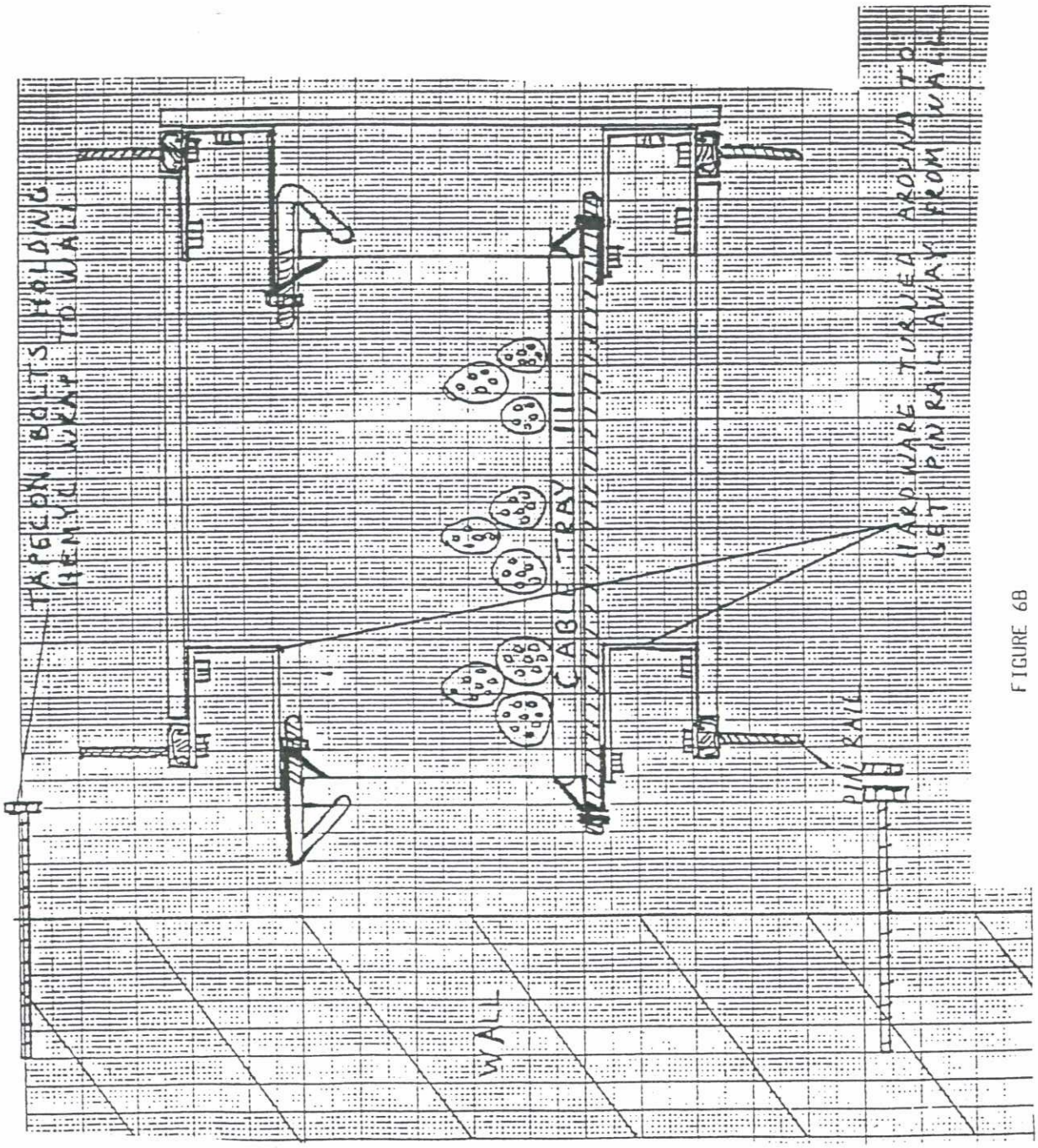

FIGURE 6B

ISSUE DESIGNATION IN THIS COLU NDICATES CURRENT CHANGE

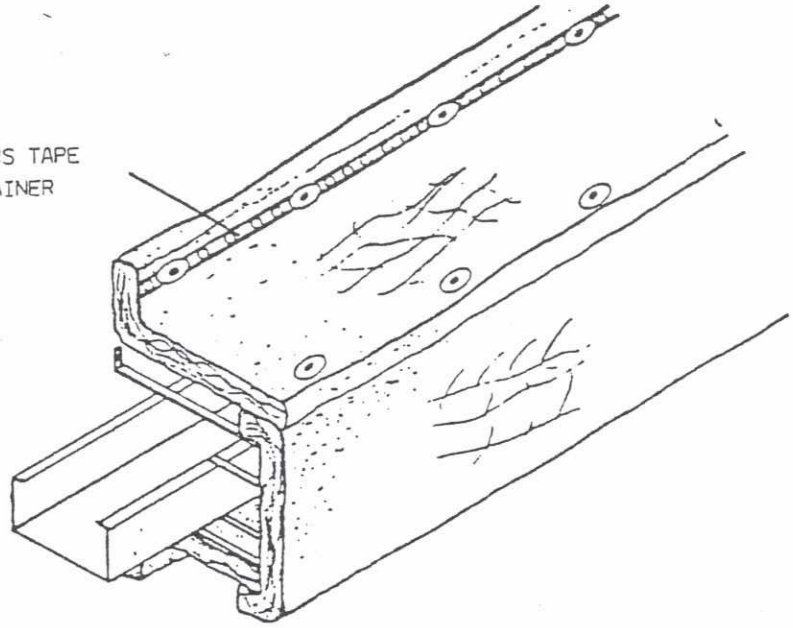

FIGURE 7

6.4 Repair Procedure

6.4.1 Responsible parties shall inspect damaged wrap to determine the extent of damage and if repair or replacement is required. Order replacement wrap if damage is extensive.

6.4.2 Remove damaged wrap to work area.

6.4.3 Replace any damaged or deformed framework/support materials utilizing methods outlined in PROMATEC Installation Procedures IP-8400.101, IP-8400.102 and/or IP-8400.103.

6.4.4 Rips

6.4.4.1 Sew the interior fabric, if necessary, the full length of the ripped fabric with stitches no more than one-half (1/2") inch apart. Extra stitches will need to be added to each end of rip to ensure that the rip does not "creep".

6.4.4.2 Replace any ceramic fiber lost due to damage. Ensure that no gaps remain in fiber filler and that proper thickness is maintained.

6.4.4.3 Sew the exterior fabric together as outlined in Section 6.4.4.1. If any gaps are found in fabric it may be necessary to insert an appropriately sized piece of fabric inside the system prior to sewing fabric closed.

6.4.4.4 Reinstall wrap as outlined in PROMATEC Procedure IP-8400.101.

6.4.5 Holes or Large Tears

ISSUE DESIGNATION IN THIS COLUMN INDICATES CURRENT CHANGE

6.4.5.1 Patches of the proper type fabric, Siltemp or fiberglass, should be cut to a size sufficient to cover the hole with an approximate two (2") inch overlap onto undamaged fabric

6.4.5.2 Repair the interior surface first, if necessary, by placing patch over hole and sewing around the perimeter of patch with stitches no more than one-half (1/2") inch apart.

6.4.5.3 Replace any ceramic fiber as necessary. Ensure that no gaps remain and that proper thickness is maintained.

6.4.5.4 Place the exterior patch over the hole and sew as noted in Section 6.4.5.2. (See Figure 8.)

6.4.5.5 Reinstall wrap as outlined in PROMATEC Procedure IP-8400.101, using new locknuts on studs.

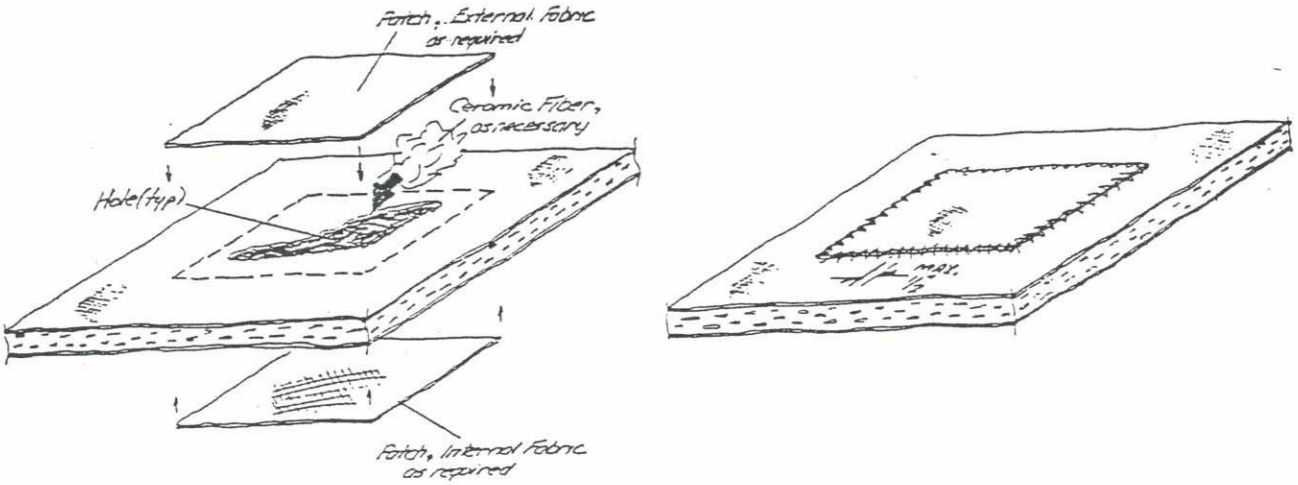

FIGURE 8

7.0 ATTACHMENTS

None

ISSUE DESIGNATION IN THIS COLUMN INDICATES CURRENT CHANGE

INSTALLATION OF HEMYC PROTECTIVE WRAP SYSTEM ONTO CABLE DROPS

1.0 PURPOSE

The purpose of this procedure is to assure that the installation of the HEMYC Protective Wrap System is consistent with the system as tested on the various qualification tests. The Fire Qualification Test, referenced as CTP-1026, consisted of a One (1) Hour Fire Exposure, per ASTM E-119 criteria, including hose stream test in accordance with the American Nuclear Insurers Information Bulletin 5(79) entitled, "ANI/MAERP Standard Fire Endurance Test Method to Qualify a Protective Envelope for Class IE Electrical Circuits",

2.0 SCOPE

C This procedure provides the methods and guidelines to be utilized for the installation of HEMYC Protective Wrap Systems onto cable drops.

3.0 REFERENCE

3.1 10CFR50, Appendix R

3.2 ANI Bulletin 5(79)

3.3 IP-8400.103, Installation for HEMYC Protective Wrap System - Onto Single or Multiple conduits

3.4 IP-8400.104, Installation for HEMYC Protective Wrap System - Around Interferences and Obstructions.

3.5 IP-8400.106, Installation for HEMYC Protective Wrap System for Cable Tray(s) and Conduit

C 3.6 QCP-10001, Packaging, Shipping, Receiving, Handling and Storage for HEMYC Protective Wrap Components

C 3.7 QCP-10002, Fabrication Inspection for HEMYC Protective Wrap Components

C 3.8 QCP-10003, Installation Inspection Criteria for HEMYC Protective Wrap Components

4.0 DEFINITIONS

4.1 **CLIP** - stainless steel metal clip used to hold banding in place.

C 4.2 **COLLAR** - a blanket used at wrap joints on conduit and/or cable wrap in place of wrap overlap.

C 4.3 **CLAMP** - stainless steel or galvanized hose type clamp or stainless steel banding.

ISSUE DESIGNATION IN THIS COLUMN DICATES CURRENT CHANGE

C 4.4 **STRIP** - cèramic blanket sufficiently thick to achieve two (2") inches air space between cable and blanket wrap.

C 4.5 **WRAP** - a fireproof product consisting of ceramic fiber material sewn into an envelope of fireproof fabric.

5.0 RESPONSIBILITIES

5.1 The authorized Installer's ENGINEERING DEPARTMENT shall be responsible to define the scope of work as prescribed on the applicable contract documents and provide the appropriate drawings, specifications, requirements, instructions, etc., to the department responsible for installation.

C This department shall also be responsible to provide liaison with applicable client personnel and other internal departments to assure smooth flow of communication.

C 5.2 The authorized Installer's PRODUCTION DEPARTMENT shall be responsible for the identification and scheduling of work to be performed as defined on the documents furnished by Engineering.

C 5.3 The Installers, as trained and certified by PROMATEC, shall be responsible for the performance of installation activities herein prescribed.

C 5.4 The Installer's QUALITY CONTROL PERSONNEL, as trained and certified by PROMATEC, shall be responsible for appropriate inspection, documentation and monitoring.

6.0 PROCEDURE

C 6.1 Cut ceramic fiber blanket sufficiently thick to achieve two (2") inch air space in approximately three (3") inch wide strips, place around cable(s) and secure, space the three (3") inch wide strips on maximum nine (9") inch centers. A minimum of two (2") inch air space is required between cable and blanket wrap.

C 6.2 Additional three (3") inch wide ceramic fiber blanket sufficiently thick to achieve two (2") inch air space may be utilized in order to maintain two (2") inch air space.

C 6.3 Place minimum one and one-half (1-1/2") inch blanket wrap around three (3") inch wide strips and cable. Banding to be placed around blanket wrap at point over three (3") inch wide strip. Blanket must overlap a minimum of three (3") inches. Outside (blanket wrap band) banding is to be placed over the three (3") inch wide strips only.

Tighten banding until blanket is compressed one-fourth to one-half (1/4" - 1/2") inch. DO NOT OVER-TIGHTEN.

6.4 At blanket wrap joints, or overlap, a two (2") inch ceramic fiber blanket cut in approximate six (6") inch wide strip should be used around cable. See IP-8400.103, Section 6.9 for detail of blanket wrap.

6.5 For termination to wall, floor or ceiling, use IP-8400.106 Conduit.

6.6 For Cable Drops into Cable Tray Wrap System, use IP-8400.104, Section 6.1 Penetrating Member.

7.0 ATTACHMENTS

7.1 Drawing B-272.11, HEMYC System Cable Drop with Air Space

ISSUE DESIGNATION IN THIS COLU .DICATES CURRENT CHANGE

NOTE:
Prefabricated blanket section dimensions determined by installers on a case by case basis. SILTEMP and fiberglass to be sewn with fire retardant Astroquartz or similar thread.

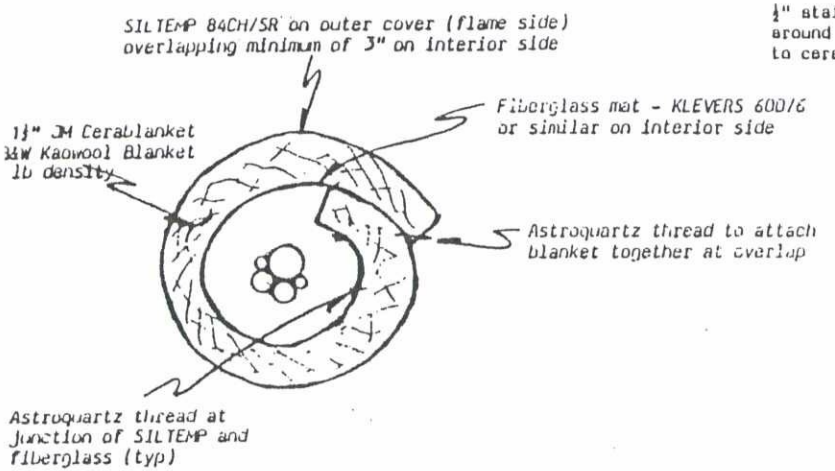

SECTION C-C
CABLE DROP W/ AIR SPACE
(TEST TWO)

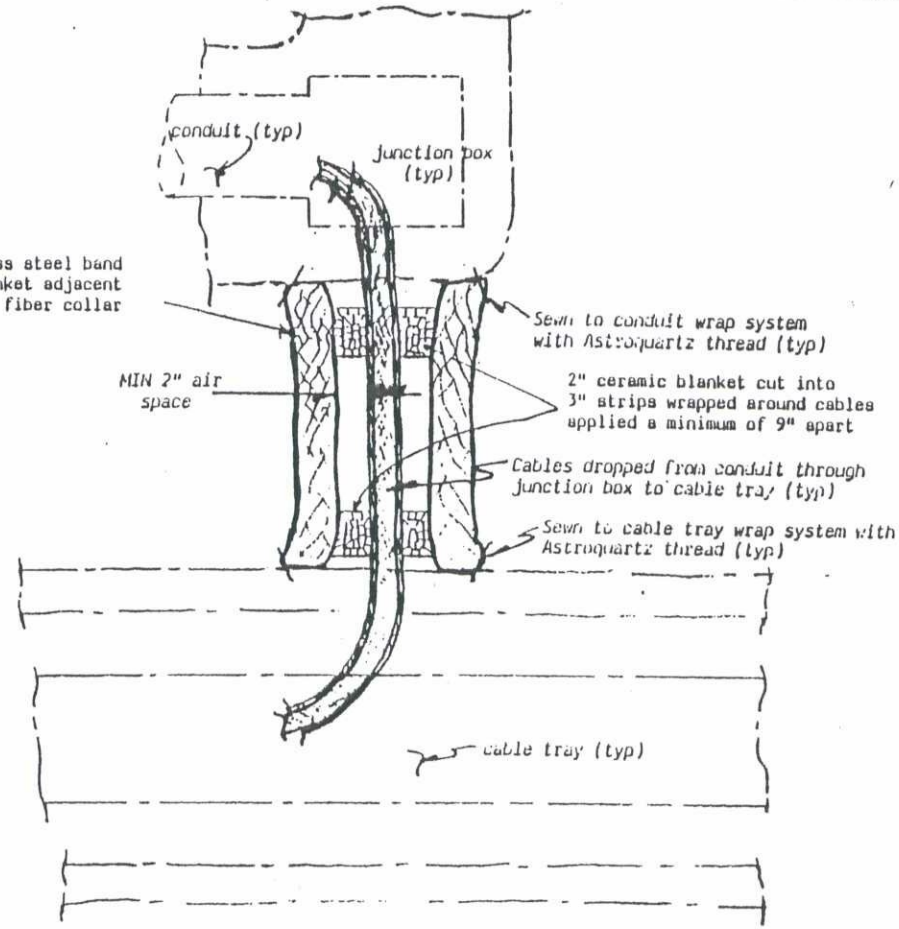

TYPICAL INSTALLATION
OF CABLE DROP W/ AIR SPACE

REVISIONS			INSULATION, INC.		
NO	DATE	BY	HEMYC SYSTEM		
1	3-30-84	KWS	CABLE DROP W/ AIR SPACE		
2			DRAWN BY LCS	SCALE nts	MATERIAL as noted
3			CHK'D	DATE 7/19/82	DRAWING NO
4			TRACED BLL	APP'D	B - 272.11
5					

ISSUE DESIGNATION IN THIS COLUMN INDICATES CURRENT CHANGE

INSTALLATION OF HEMYC PROTECTIVE WRAP SYSTEM TO JUNCTION BOXES AND SIMILAR EQUIPMENT

1.0 PURPOSE

The purpose of this procedure is to assure that the installation of the HEMYC Protective Wrap System is consistent with the system as tested in the various qualification tests. The Fire Qualification Test, referenced as CTP-1026, consisted of a One (1) Hour Fire Exposure, per ASTM E-119 criteria, including hose stream test in accordance with the American Nuclear Insurers Information Bulletin No. 5(79) entitled, "ANI/MAERP Standard Fire Endurance Test Method to Qualify a Protective Envelope for Class IE Electrical Circuits."

2.0 SCOPE

This procedure provides the methods and guidelines to be utilized for the installation of Protective Wrap Components to electrical junction boxes and similar equipment.

3.0 REFERENCE

3.1 10CFR50, Appendix R

3.2 ANI Bulletin No. 5(79)

3.3 HEMYC Test CTP-1026

3.4 IP-8400.101, Installation Procedure for HEMYC Protective Wrap System - Straight Sections

3.5 QCP-10001, Packaging, Shipping, Receiving, Handling, and Storage for HEMYC Protective Wrap Components

3.6 QCP-10002, Fabrication Inspection for HEMYC Protective Wrap Components

3.7 QCP-10003, Installation Inspection Criteria for HEMYC Protective Wrap Components

3.8 HEMYC Protective Cable Wrap System Typicals, PROMATEC Drawings B-310, B-311, B-312 and B-313.

4.0 DEFINITIONS

None

5.0 RESPONSIBILITIES

5.1 The authorized Installer's ENGINEERING DEPARTMENT shall be responsible to define the scope of work as prescribed on the applicable contract documents and provide the appropriate drawings, specifications, requirements, instruction, etc., to the department responsible for installation.

ISSUE DESIGNATION IN THIS COLU NDICATES CURRENT CHANGE

This department shall also be responsible to provide liaison with applicable client personnel and other internal departments to assure smooth flow of communication.

5.2 The authorized Installer's PRODUCTION DEPARTMENT shall be responsible for the identification and scheduling of work to be performed as defined on the documents furnished by ENGINEERING.

C 5.3 The Installers, as trained and certified by PROMATEC, shall be responsible for the performance of installation activities herein prescribed.

C 5.4 The Installer's QUALITY CONTROL PERSONNEL shall be responsible for appropriate inspection, documentation, and monitoring.

6.0 PROCEDURE

6.1 Layout of Wrap

6.1.1 The Installer's Site Engineer shall take exterior measurements of the junction boxes to be protected and develop a pattern similar to the pattern shown in Figure 1. An alternate method would be to develop pieces that could be sewn as shown in Figure 2.

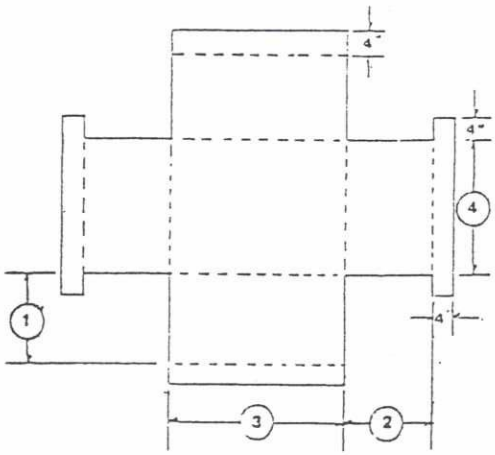

FIGURE 1

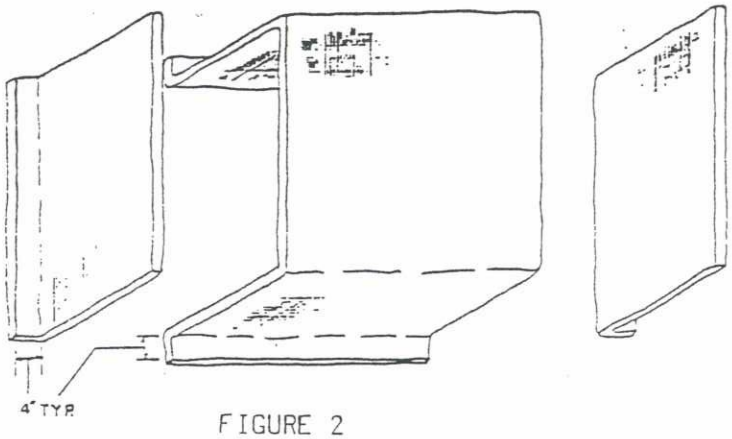

FIGURE 2

6.1.2 Dimensions #1, 2 and 3 on Figure 1 should be increased four (4") inches from junction box dimensions to allow for wrap thickness.

6.1.3 Note on Figures 1 and 2 that approximately four (4") inches is allowed at ends to overlap onto surface for attachment.

6.1.4 The Installer's Site Engineer should ensure that sufficient material allowances are made on all patterns to provide for overlap at corners of junction box.

6.2 Installation

6.2.1 Wrap System may be installed as shown in Figure 3 for floor, wall or ceiling mounting or as shown in Figure 4 in the case of free standing equipment.

FIGURE 3

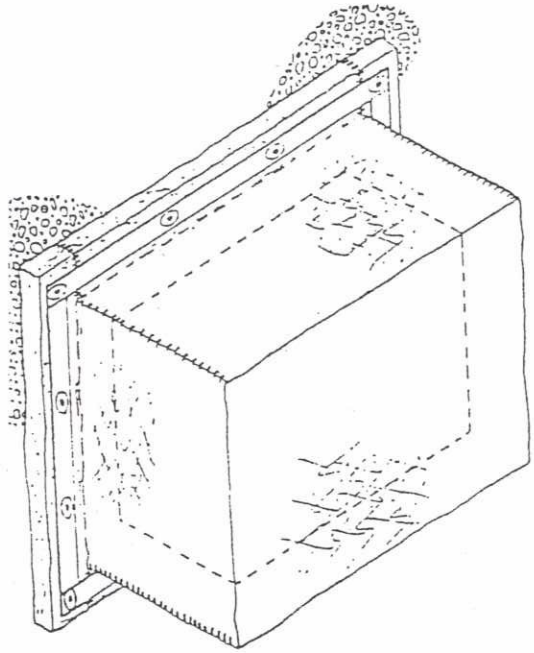

ISSUE DESIGNATION IN THIS COLL ..DICATES CURRENT CHANGE

ISSUE DESIGNATION IN THIS COLU NDICATES CURRENT CHANGE

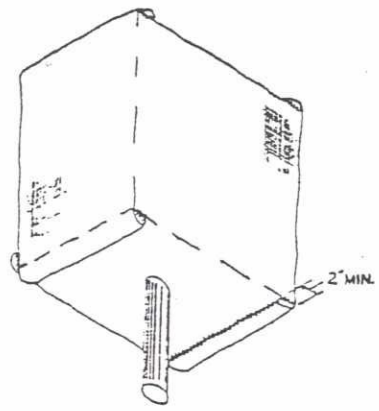

FIGURE 4

6.2.2 For equipment that will require frequent access, a framework may be used as shown in Figure 5 to provide ease of system removal.

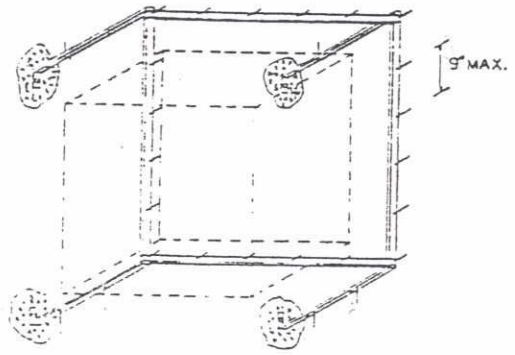

FIGURE 5

6.2.3 Concrete anchors used for floor, wall or ceiling installation shall be placed as determined by the Installer's Site Engineer.

6.2.4 Mounting of wrap to floor, wall or ceiling shall be done similar to that described in Procedure IP-8400.104.

6.2.5 All sewing shall be done in accordance with the requirements of Procedure IP-8400.104.

? even with stand-off

6.2.6 Ensure that no gaps exist in Wrap System. Minimum thickness of wrap at all points is two (2") inches. Fill as necessary with ceramic blanket to maintain minimum thickness.

7.0 ATTACHMENTS

None

CONTROL NO. LCN01

PROMATEC

PROGRESSIVE MATERIALS AND TECHNOLOGIES, INC.

PROCEDURE FOR:	PROCEDURE NUMBER:
INSTALLATION OF HEMYC PROTECTIVE WRAP SYSTEM - STRAIGHT SECTIONS OF CABLE TRAY	IP-8400.101

PROCEDURE ISSUE SUMMARY

ISSUE/DATE	PREPARER	APPROVED	COMMENTS
G ISSUE 01/25/95	L.C. Spriggs	R.J. Block	Revised as noted. Issue for use.

Form QC 5
06/01/82 (Rev 2) 09/13/91

ISSUE DESIGNATION IN THIS COLUMN INDICATES CURRENT CHANGE

INSTALLATION OF HEMYC PROTECTIVE WRAP SYSTEM STRAIGHT SECTIONS OF CABLE TRAY

1.0 PURPOSE

The purpose of this procedure is to assure that the installation of the HEMYC Protective Wrap System is consistent with the system as tested on various qualification tests. The Fire Qualification Test, referenced as PROMATEC CTP-1026, consisted of a One (1) Hour Fire Exposure, per ASTM E-119 criteria, including hose stream test in accordance with the American Nuclear Insurers Information Bulletin No. 5(79) entitled, "ANI/MAERP Standard Fire Endurance Test Method to Qualify a Protective Envelope for Class IE Electrical Circuits".

2.0 SCOPE

This procedure provides the methods and guidelines to be utilized for the installation of HEMYC Protective Wrap Systems.

3.0 REFERENCE

3.1 10CFR50, Appendix R

3.2 ANI Bulletin No. 5(79)

3.3 HEMYC Test CTP-1026

3.4 QCP-10001, Packaging, Shipping, Receiving, Handling and Storage for HEMYC Protective Wrap Components

3.5 QCP-10002, Fabrication Inspection for HEMYC Protective Wrap Components

3.6 QCP-10003, Installation Inspection Criteria for HEMYC Protective Wrap Components

3.7 HEMYC Protective Cable Wrap System Typicals; PROMATEC Drawings B-310, B-311, B-312 and B-313

4.0 DEFINITIONS

4.1 **BASE** - slotted and drilled, formed plate used in assembly of locking clamp.

4.2 **BRACKET** - galvanized "C" used in conjunction with a base and U-Bolt to make a locking clamp.

4.3 **FENDER WASHER** - a flat washer approximately 1-1/2" O.D. with a small inside hole to slip over rail studs. The function is to prevent or minimize damage to wrap by the locknut and to provide more wrap support.

4.4 **FRAMEWORK** - an assembly consisting of four struts and four clamps (friction or

locking) that surrounds the cable tray, normally spaced on eighteen (18") inch centers.

4.5 **FRICTION CLAMP** - pre-galvanized device used to connect framework to cable tray.

4.6 **LOCKING CLAMP** - galvanized assembly similar to friction clamp but is tightly bolted to the cable tray to prevent movement of the framework.

4.7 **LOCKNUT** - a specially designed, vibration resistant nut having a plastic insert on the threaded portion. These are used primarily on the locking clamp and the rail studs.

4.8 **RAIL** - long sections of strut with threaded anchors stud-welded to it. These are attached to the framework parallel to the tray. Rails provide anchors to secure the Wrap System and add longitudinal support to the framework.

4.9 **SPRING NUTS** - a specially designed rhomboid shaped nut with a spring permanently attached that is used to secure clamps to the struts.

4.10 **STRUTS** - lightweight, pre-galvanized channel used to provide structural support to the Wrap System.

4.11 **U-BOLT** - a "U" shaped bolt bent to provide attachment of locking clamp to cable tray.

4.12 **WRAP** - a fireproof product consisting of ceramic fiber material sewn into an envelope of fireproof fabric.

5.0 RESPONSIBILITIES

5.1 The authorized Installer's ENGINEERING DEPARTMENT shall be responsible to define the scope of work as prescribed on the applicable contract documents and provide the appropriate drawings, specifications, requirements, instructions, etc., to the department responsible for installation.

This department shall also be responsible to provide liaison with applicable client personnel and other internal departments to assure smooth flow of communication.

5.2 The authorized Installer's PRODUCTION DEPARTMENT shall be responsible for the identification and scheduling of work to be performed as defined on the documents furnished by Engineering.

G 5.3 The Installer's, as trained and certified by PROMATEC, shall be responsible for performance of installation activities herein prescribed.

G 5.4 The Installer's QUALITY CONTROL PERSONNEL, as trained and certified by PROMATEC, shall be responsible for appropriate inspection, documentation and monitoring.

6.0 PROCEDURE

6.1 Locking Clamp Assembly (See Figure 1).

G 6.1.1 Attach U-Bolt to base by sliding U-Bolt through slots in base. U-Bolt and base plate may be turned 180°.

ISSUE DESIGNATION IN THIS COLL NDICATES CURRENT CHANGE

ISSUE DESIGNATION IN THIS COLU DICATES CURRENT CHANGE

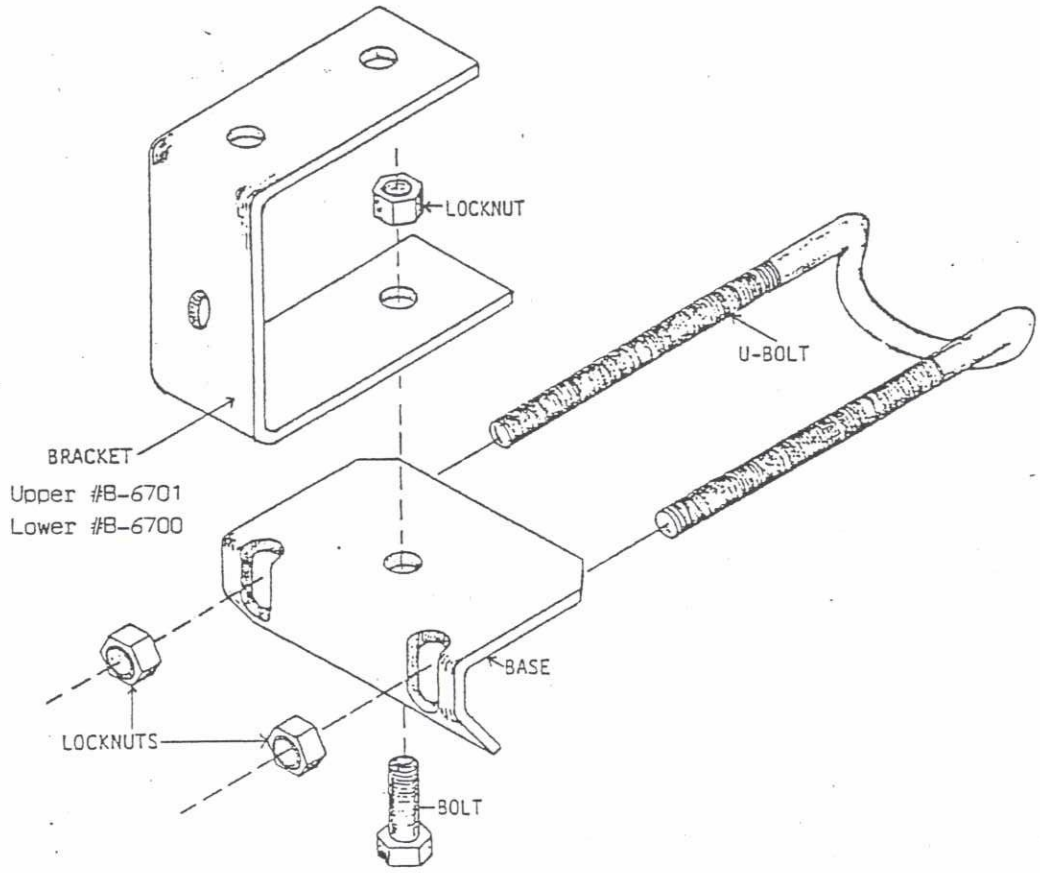

LOCKING CLAMP - ASSEMBLY

FIGURE 1

G

6.1.2 Secure U-Bolt by threading locknuts onto legs until threads contact nylon insert in locknut. DO NOT TIGHTEN.

6.1.3 Insert 1/4" x 3/4" - 20 Thread Bolt through hole in bottom of base and through hole on long leg of bracket. For cable tray 90° or 45° bend sections, two clamp bases may share this bolt.

6.1.4 Thread locknut onto bolt and tighten. Ensure that a minimum of one (1) full thread is visible above the locknut. Keep bracket as square as possible in relation to base.

6.1.5 For alternate cable tray types, the Installer's Site Engineer shall determine the type of clamping devices to be utilized. (Alternate clamping devices shall, as a minimum, provide adequate support similar to those devices utilized in the fire test.)

6.2 Framework Assembly and Installation

6.2.1 Insert Spring nuts near ends of strut sections.

6.2.2 Attach clamps to each end of horizontal struts using bolt and lockwasher threaded into spring nut. (Written instruction for installation of alternate clamping devices shall be delineated on site specific addendums to this and/or other procedures.)

G When necessary for additional support, horizontal strut may be attached to an adjacent support using the #B-6141 flat bracket. In order to match existing interferences, horizontal and side struts may be installed at acute or obtuse angles.

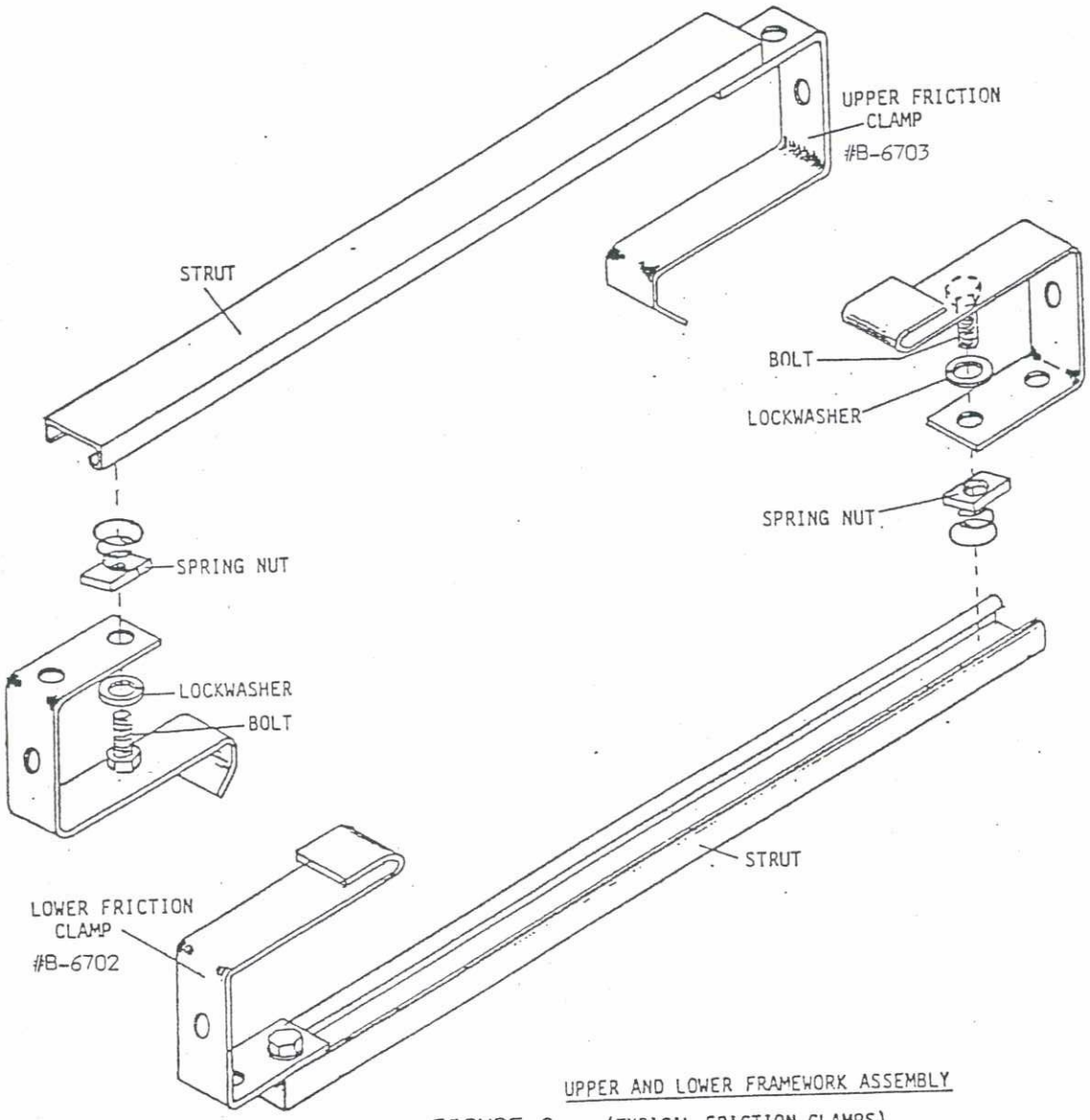

UPPER AND LOWER FRAMEWORK ASSEMBLY

FIGURE 2 (TYPICAL-FRICTION CLAMPS)

ISSUE DESIGNATION IN THIS COLUMN INDICATES CURRENT CHANGE

6.2.3 Install clamp and strut assembly onto cable tray on approximate eighteen (18") inch centers. At least every seventh assembly should be locking clamps. Additional locking clamps may be installed if required by Installer's Site Engineer. Clamps may be mixed as determined by the Installer's Site Engineer (See Figure 3A and Figure 3B). Do not damage cable during installation.

G #B-6700 and #B-6701 brackets may be bent as necessary to install framework. Two (2") inch minimum air space to be maintained in all directions between the outside of the tray and the outside of the struts, unless approved by FCR.

ISSUE DESIGNATION IN THIS COLUMN INDICATES CURRENT CHANGE

FRICTION CLAMP ASSEMBLY-TYPICAL

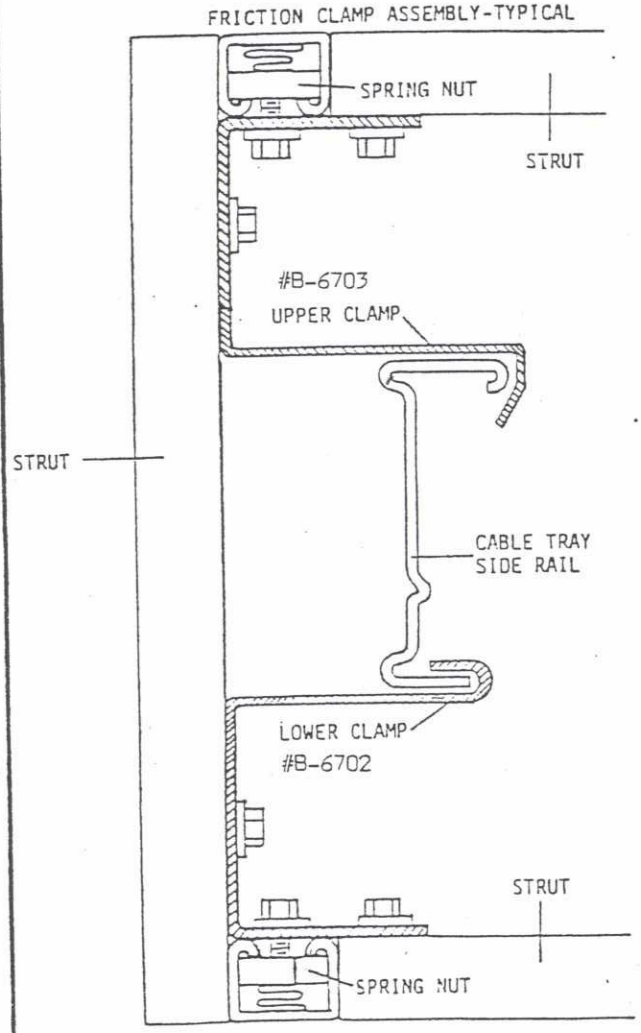

FIGURE 3A

LOCKING CLAMP ASSEMBLY-TYPICAL

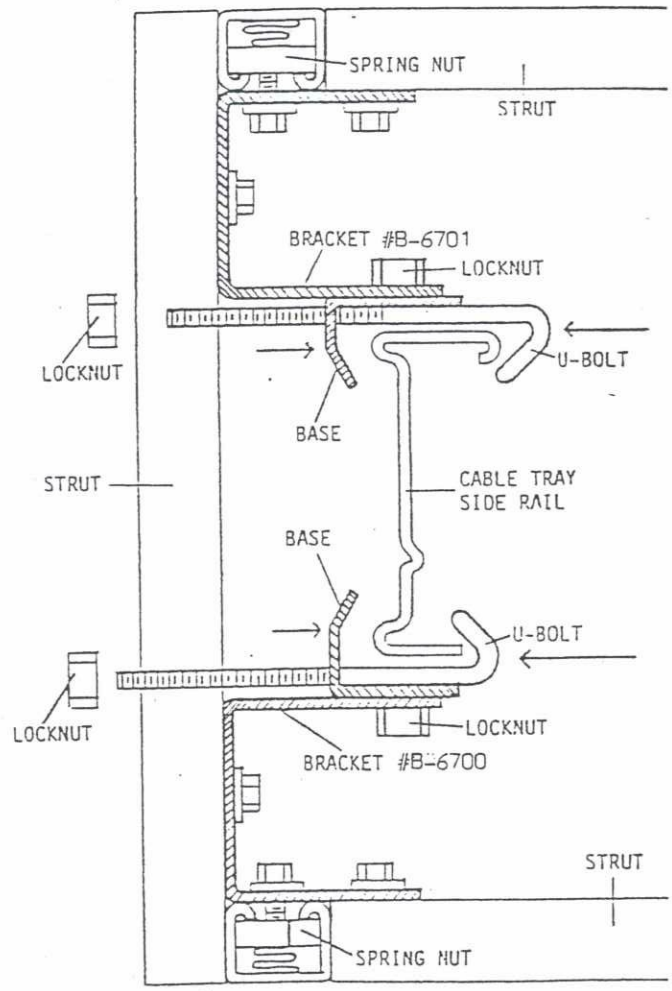

FIGURE 3B

ISSUE DESIGNATION IN THIS COLU ◄DICATES CURRENT CHANGE

G 6.2.4 Attach side struts to horizontal assemblies using bolt and lockwasher threaded into spring nut. Strut may need to be moved up or down to facilitate bolt insertion. (See Figure 4.) In order to match existing interferences, horizontal and side struts may be installed at acute or obtuse angles.

FRAMEWORK ASSEMBLY-TYPICAL(FRICTION CLAMPS)

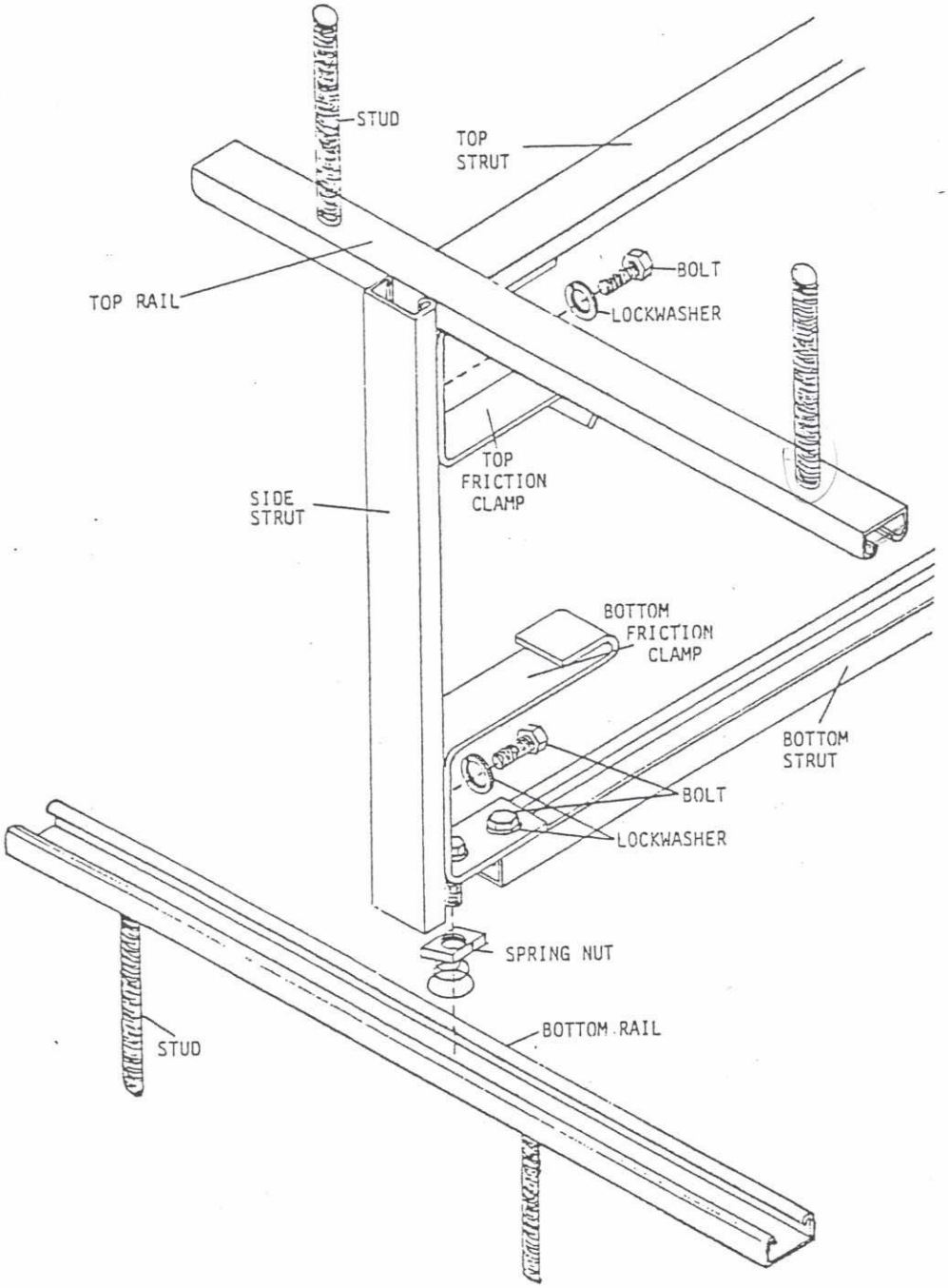

FIGURE 4

ISSUE DESIGNATION IN THIS COLUMN INDICATES CURRENT CHANGE

6.2.5 Insert spring nuts into rails on approximate eighteen (18") inch centers.

6.2.6 With the framework sections placed on approximate eighteen (18") inch centers (± 1"), attach rails using bolts and lockwashers.

6.2.7 Check to ensure that side struts are flush (± 1/4") with the rails and firmly tighten bolts to ensure side struts to clamps.

6.2.8 Firmly tighten bolts to ensure rails to clamps.

6.2.9 Remove gaps, if any, between rails and horizontal strut by pulling on opposing side strut or rail and firmly tighten bolt to secure horizontal struts.

6.2.10 Firmly tighten locknuts on positive clamp U-Bolt to secure framework.

6.2.11 Frameworks may be shifted, if necessary, by loosening bolt to rail, moving framework as required, and retightening bolt.

6.3 Wrap Installation

6.3.1 Assemble materials, wraps, washers, nuts, etc., in area of cable tray to be protected.

6.3.2 For ease of installation either the sides or bottom wrap may be placed on the framework first. The top blanket should be the last blanket to be placed on the framework in order to have ease of access to cables.

6.3.3 Attach side wraps to top rails by forcing wraps onto studs (Use of pointed instrument, such as a punch, to start holes in wraps is suggested). Ensure the wrap is secured to studs. Impale wrap (inside filler material) at least two (2") inches past the edge of the stud. (See Figure 5.)

[CONTINUED ON NEXT PAGE]

ISSUE DESIGNATION IN THIS COLU NDICATES CURRENT CHANGE

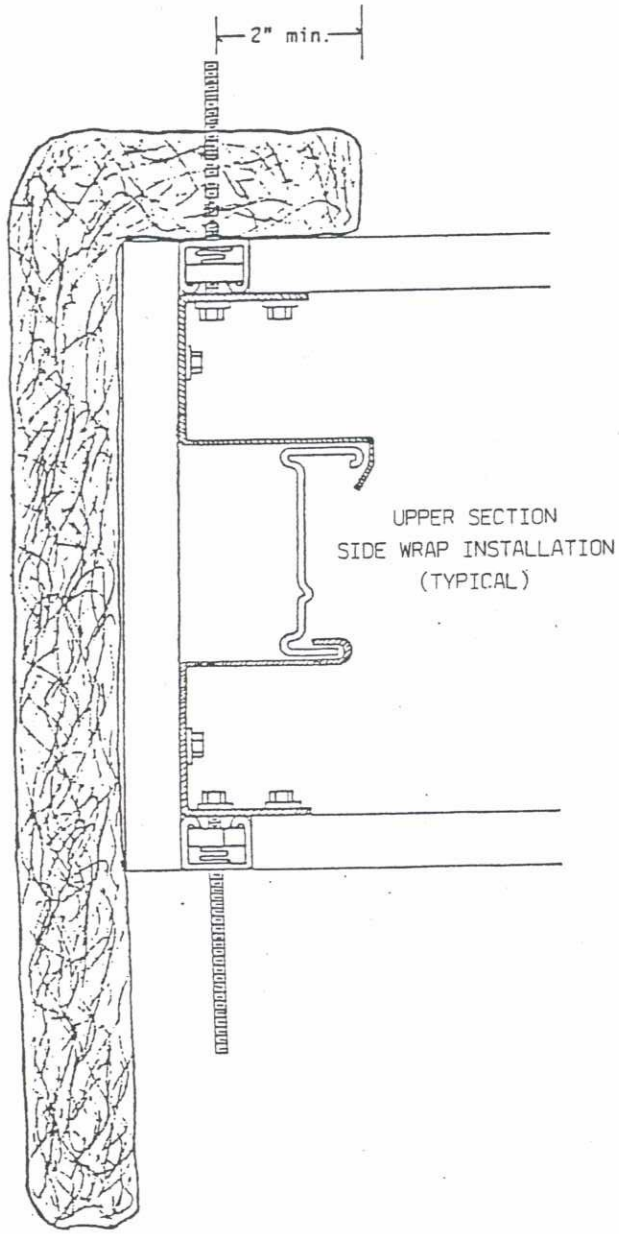

FIGURE 5

6.3.4 Install bottom wrap onto bottom rails. This is easier if both sides are done at the same time working from one end. Use fender washers and locknuts to hold the wrap onto the studs temporarily. Do not tighten the locknuts or damage the plastic insert. (See Figure 6.) If locknut is damaged, replace with a new one.

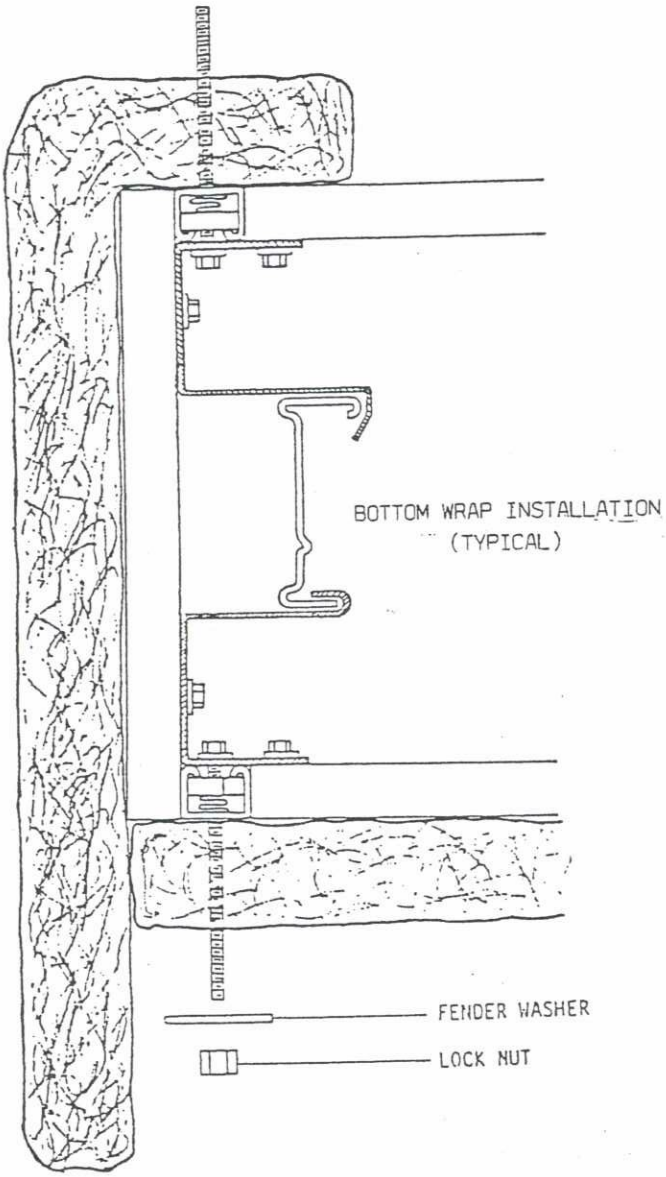

FIGURE 6

ISSUE DESIGNATION IN THIS COLU DICATES CURRENT CHANGE

6.3.5 Attach lower end of side wraps to bottom rail. This is best accomplished by removing, one at a time, a fender washer and locknut supporting the bottom wrap, forcing the side wrap onto the stud and re-installing the fender washer and locknut. Make sure that the side wrap extends a minimum of two (2") inches past the studs. (See Figure 7.)

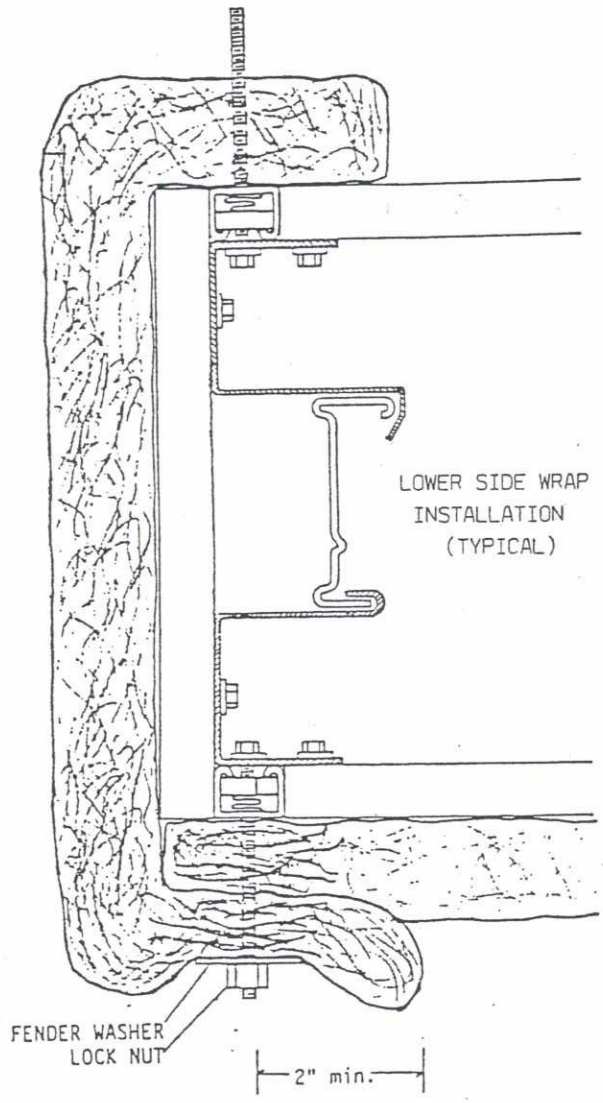

FIGURE 7

ISSUE DESIGNATION IN THIS COLU NDICATES CURRENT CHANGE

6.3.6 Place top wrap on top framework approximately centered. Push wrap onto studs and install fender washer and locknuts. (See Figure 8.)

6.3.7 Tighten locknuts onto studs until the wraps are compressed one-fourth to one-half (1/4" - 1/2") inches.

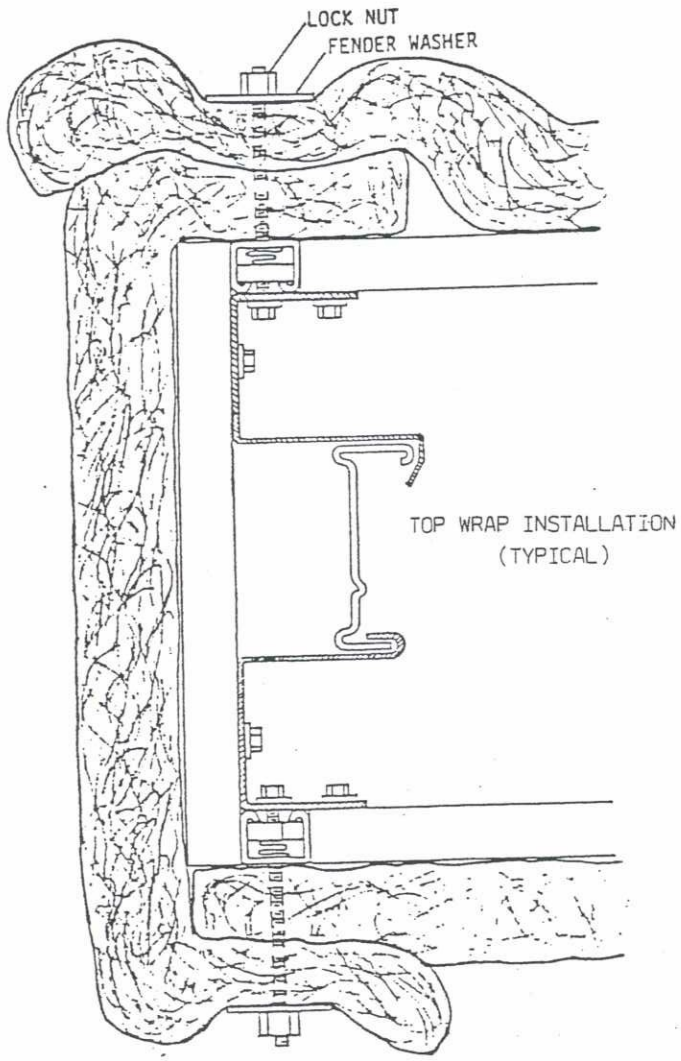

FIGURE 8

ISSUE DESIGNATION IN THIS COLU DICATES CURRENT CHANGE

G 6.3.8 At Wrap System continuation joints, the continuing Wrap System must overlap four to six (4" - 6") inches onto the other system. (See Figure 9.) Additional studs may be required as determined by Installer's Site Engineer. These studs are to be installed by Construction or any required or additional framework rail or strut where Wrap System needs additional support. In some cases, pin rail may need to be installed in place of strut. Engineering approval is not required for additional support.

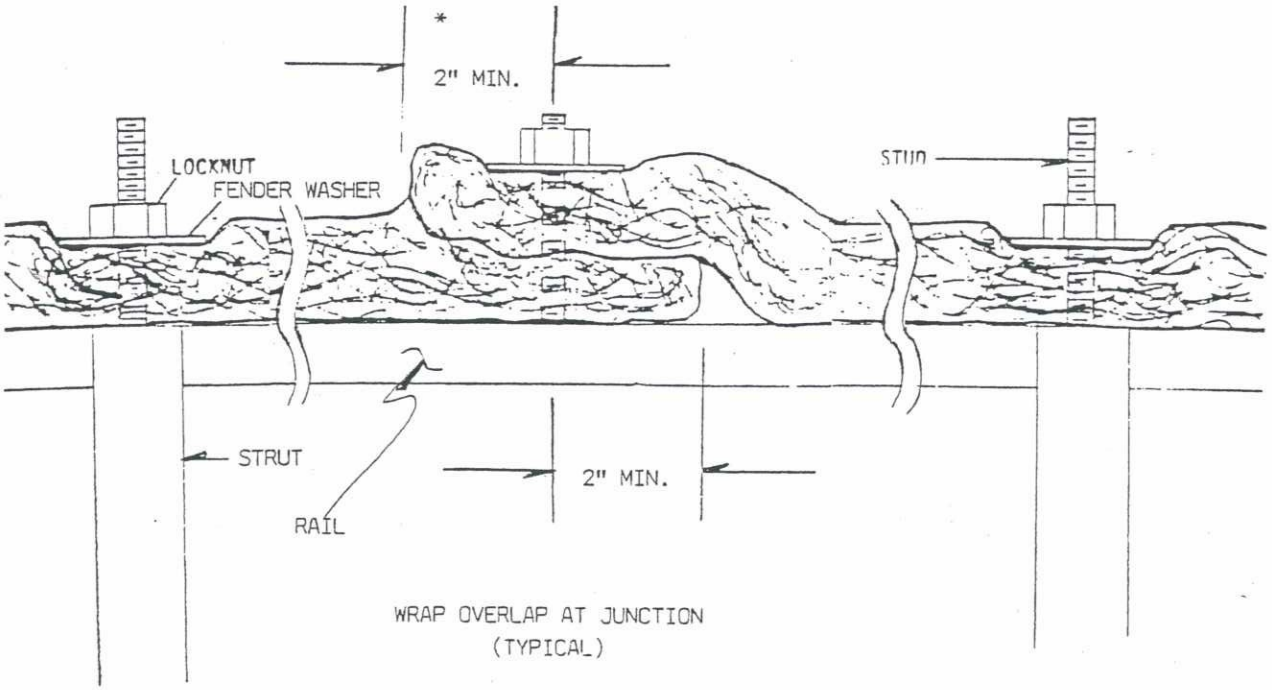

* SEE PARA 6.3.9 WHEN EXTERIOR BLANKET DOES NOT EXTEND BEYOND THE STUDS THE REQUIRED 2" MINIMUM.

FIGURE 9

6.3.9 In those situations where the exterior blanket at any joint does not extend beyond the studs the recommended two (2") inch minimum, an overlap of less than two (2") inches used in conjunction with a continual quartz thread stitching along the joint is an acceptable alternate.

6.3.10 Stagger Wrap System continuation joints so that only opposite sides stop at any one stud (two side wraps or top and bottom wrap). No more than three thicknesses of wrap should be on any one stud.

ISSUE DESIGNATION IN THIS COLU .DICATES CURRENT CHANGE

ISSUE DESIGNATION IN THIS COLUMN INDICATES CURRENT CHANGE

FABRICATION PROCEDURE FOR THREE HOUR FIRE M.T. BARRIER COMPONENTS

1.0 PURPOSE

The purpose of this procedure is to assure that the fabrication of the Three Hour Fire M.T. Barrier Components are consistent with the system components as tested in PROMATEC Three Hour Fire qualification tests.

2.0 SCOPE

The PROMATEC Three Hour M.T. Barrrier System is comprised of Three compponent assemblies: 1) Inner Blanket Assembly, 2) Moisture Barrier, 3) Outer Blanket Assembly. This procedure shall address the Inner Assembly and Outer Assembly only and shall provide the methods and guidelines utilized in the fabrication of these assemblies.

3.0 REFERENCES

3.1 Fabrication Order (Form QC-59). See Attachment 7.1.

3.2 QCP-0042 -- Fabrication Inspection for PROMATEC protective wrap envelopes (Blankets).

3.3 QCP-0041 -- Packaging, shipping, receiving, handling and storage of PROMATEC protective wrap components

4.0 DEFINITIONS

4.1 Hot Side -- The outermost surface of a blanket assembly. See Attachment 7.2, Figure 3.

4.2 Cold Side -- The innermost surface of a blanket assembly. See Attachment 7.9, Figure 7.

5.0 RESPONSIBILITY

5.1 The Construction Manager or designee shall be responsible for the preparation and processing Fabrication Orders (QC-59) in accordance with PROMATEC field engineering and/or client requirements.

5.2 The Technical Services Manager or designee shall be responsible for providing assistance and direction for unique design configurations.

5.3 The authorized fabricator shall follow Fabrication Order form (QC-59), fabrication procedure, and Quality Control Procedure. The Quality Assurance Manager or designee shall be responsible for the development and implementation of appropriate procedures for shop field and source inspection of fabricated components to verify conformance with design requirements.

ISSUE DESIGNATION IN THIS CO. N INDICATES CURRENT CHANGE

6.0 PROCEDURE

6.1 This procedure applies to the fabrication of the Three Hour M.T. Barrier Components by PROMATEC at the shop and field level, by PROMATEC qualified fabrication sources, and by client or their contractors (when written agreements allow).

6.2 Fabrication performed by any organization other than PROMATEC shall require qualification of such organizations and approval of programs established for controlling fabrication.

6.3 PROMATEC Quality Assurance shall have right of access for source inspection and/or audit to verify compliance with design and quality requirements.

6.4 Prior to the fabrication of any blankets the applicable portions of Fabrication Order Forms (QC-59) shall be completed as outlined in Fabrication Inspection (QCP-0042) guideline. Only acceptable materials listed on Attachment 7.2 will be utilized for fabrication.

6.5 Fabrication of Inner Blanket Assembly

6.5.1 Cut alumina/silica fiber blanket to proper dimensions per Fabrication Order Form (QC-59), to assure finished edge. Cut alumina/silica fiber back six inches as shown on fabrication order to allow for ship lap. See figure 1, Attachment 7.3.

6.5.2 Cut two pieces of fiberglass cloth to proper dimensions for alumina/silica blanket. Allow enough fiberglass cloth to assure all ends have a min. 3/8" tuck. See figure 2, Attachment 7.4.

6.5.3 Place fiberglass cloth and alumina/silica fiber blanket in appropriate position, allow for 3/8" min. tuck on ends and hog ring all edges of fiberglass cloth on hot side of envelope. For spacing of hog rings and clarification of finish edge see figure 3, Attachment 7.5.

6.6 Fabrication of Outer Blanket Assembly

6.6.1 The outer blanket assembly consists of two subassemblies, enveloped in silica dioxide fabric cloth. These subassemblies consist of, alumina/silica fiber blanket and powder (Honey Comb and/or straight tube) envelope.

6.6.2 Fabrication of the powder envelope (Honey Comb).

6.6.2.1 Cut three pieces of coated fiberglass cloth to dimensions assuring proper finished edges as per fabrication order form.

ISSUE DESIGNATION IN THIS CO. ▼ INDICATES CURRENT CHANGE

6.6.2.2 Lay all three pieces of coated fiberglass cloth together and sew a single stitch the length of the fabric 1/2"(±1/4") from the edge on one side only.

6.6.2.3 Sew top and center layers of cloth 3/8"(±1/8") form first sewn edge. Sew with a single stitch the length of the fabric.

6.6.2.4 Fold bottom end of fabric (across grain of tubes) 1/2"(±1/4") and sew across the length of fold with a single stitch.

6.6.2.5 Alternate sewing with a single stitch the length of the fabric from the top and center layers and the bottom and center layers every 7/8"(±1/8"). See figure 4, Attachment 7.6.

6.6.2.6 Fold bottom end of fabric (across grain of tubes) 1/2"(±1/4") and sew across the length of fold with a single stitch.

6.6.2.7 Fill each tube with powder to the size required for each assembly. As per Fabrication form (QC-59).

6.6.2.8 Fold top end of fabric (across grain of tubes) 1/2"(±1/4") and sew across fabric with a single stitch to seal tubes. See figure 5, Attachment 7.7.

6.6.3 Alternate-Fabrication of the powder envelope (straight tubes).

6.6.3.1 Cut two pieces of coated fiberglass cloth to dimension assuring proper finished edges´ as per fabrication order form.

6.6.3.2 Lay the two pieces of coated fiberglass cloth together and sew a single stitch the length of the fabric 1/2"(±1/4") from the edge on one side only.

6.6.3.3 Continue to sew the length of the fabric every 1 5/8"(±1/8") from the first sewn edge with a single stitch. See figure 6, Attachment 7.8.

6.6.3.4 Fold bottom end of fabric (across grain of tubes) 1/2"(±1/4") and sew across the length of fold with a single stitch.

6.6.3.5 Fill each tube with powder to the size required for each assembly. As per Fabrication form (QC-59)

6.6.3.6 Fold top of fabric (across fabric of tubes) 1/2" (±1/4") and sew across fabric with a single stitch to seal tubes. Reference of finished assembly, see figure 5, Attachment 7.7.

6.7 Cut Alumina/Silica Fiber Blanket to proper dimensions per Fabrication Order Form (QC-59) to assure finished edge.

6.7.1 Cut two pieces of silica dioxide cloth to proper dimensions to make one envelope for alumina/silica fiber blanket and powder assembly.

6.7.2 Place silica dioxide cloth, alumina/silica fiber blanket, and powder assembly in proper layer. Adjust alumina/silica fiber blanket as shown on fabrication order to allow for 6" ship lap design. Hog ring silica dioxide cloth on cold side of outer blanket assembly. See figure 7, Attachment 7.9.

6.7.3 Alternate method for hog rings on outer blanket assembly, is the use of (Type Q-24) teflon coated thread.

6.7.4 Lacing hooks shall be placed 7-1/2"(±1/4") from finished edges. They shall be place on all top ship lap edges 1-1/2" (±1/4") from the edge. Lacing hooks to be spaced on maximum of 6" centers. See figure 8, Attachment 7.10.

6.8 Identification Markings of Inner and Outer Blankets

6.8.1 Identification markings shall be placed on every blanket assembly, both inner and outer at a minimum of two locations as follows:

a) In close proximity to one of the lengthwise edges on the hot side surface.

b) In close proximity to one of the end edges on the hot side surface.

c) Various project requirements may specify that these markings are also provided on the cold side surface.

6.8.2 These markings shall be the blanket number as shown on Fabrication Order Form (QC-59).

6.8.3 These markings shall be of a site approved waterproof paint and/or ink which will retain the marking, withstand weather deterioration, other handling effects and shall not be deleterious to the fabrics.

ISSUE DESIGNATION IN THIS COL. ↑ INDICATES CURRENT CHANGE

6.8.4 These markings shall be in character no less than 3/4" high.

6.8.5 Other Client approved methods of identification, i.e., tags, etc. may be used in lieu of blanket marking as described if required by project specification.

6.9 Multiple Pieces of Ceramic Fiber Blanket

6.9.1 Whenever multiple pieces of alumina/silica fiber blanket are utilized within one envelope the use of ship lap design is to be used, and darting with Quartz (Type Q-24) thread is to be used to avoid separation of the pieces of alumina/silica fiber blanket. See figure 9, Attachment 7.11.

7.0 ATTACHMENTS

7.1 Fabrication Order Form (QC-59)

7.2 Acceptable Material (Proprietary Information)

7.3 Figure 1

7.4 Figure 2

7.5 Figure 3

7.6 Figure 4

7.7 Figure 5

7.8 Figure 6

7.9 Figure 7

7.10 Figure 8

7.11 Figure 9

ISSUE DESIGNATION IN THIS CO ↓ INDICATES CURRENT CHANGE

PROMATEC

FABRICATION ORDER

PFO-

PROJECT NAME	CUSTOMER	CUSTOMER ORDER NO.	JOB NO.

TYPE _____ QUANTITY _____

LENGTH _____ WIDTH _____ THICKNESS _____ TOTAL FT^2 _____

SCHEMATIC DRAWING REF. _____ SCHEMATIC NO. _____

I.D. NO. _____

ORDERED BY _____ DATE _____

SKETCH

CERTIFICATE OF CONFORMANCE

We hereby certify that all items furnished were fabricated with materials provided by PROMATEC and conform to the requirements of Purchase Order No. _____.

Signature _____ Company _____ Date _____

PROMATEC QUALITY ASSURANCE ACCEPTANCE

Signature _____ Title _____ Date _____

ISSUE DESIGNATION IN THIS CL ↓ INDICATES CURRENT CHANGE

ATTACHMENT 7.2

Only approved materials as listed below shall be utilized in the fabrication of PROMATEC's protective wrap components.

1. Silica Dioxide Cloth

   a. Siltemp S84 and/or 84 SRWR
   b. Santex
   c. Refrasil

2. Fiberglass cloth (Inner Blanket).

   a. Alpha 76281-4634
   b. J.P. Stevens 3582 3910
   c. J.P. Stevens 2025
   d. Havaglass

3. Coated fiberlass cloth

   a. Alpha 76281-4634
   ~~b. J.P. Stevens 3582 3910~~

INNER OUTER not same as Figure 1

4. Alumina Silica Fiber Blanket - 1" and 1-1/2" nom.

   a. Johns Manville Cerablanket, 8# density 2400° F.
   b. Babcock & Wilcox Kaowool Blanket, 8# density 2300° F. Carborundum Durablanket, 8# density 2300° F.

5. Trihydrate Alumina Grade 30

   a. Alcoa-C30 and/or B. Solem-SB30

6. Hog Rings

   a. Spenaz 16SS-110
   b. Or approved equal

7. Lacing Hooks

   a. Alpha-Maritex 2-1/2" AML-1201-SS
   b. Erico Jones
   c. Or approved equal.

8. Nylon Thread

   a. Tex 90 Spun Kevlar

9. Quartz Thread

   a. Astroquartz - Type Q-24 teflon coated
      and/or
   b. Alphaquartz - Type Q-24 teflon coated

INNER BLANKET ASSEMBLY
ALUMINA/SILICA FIBER BLANKET

ONE - ONE HALF - TWO INCH THICK

NOT SAME AS 4.0

1" INNER
1½ OUTER } per IP-001 4.1 & 4.3

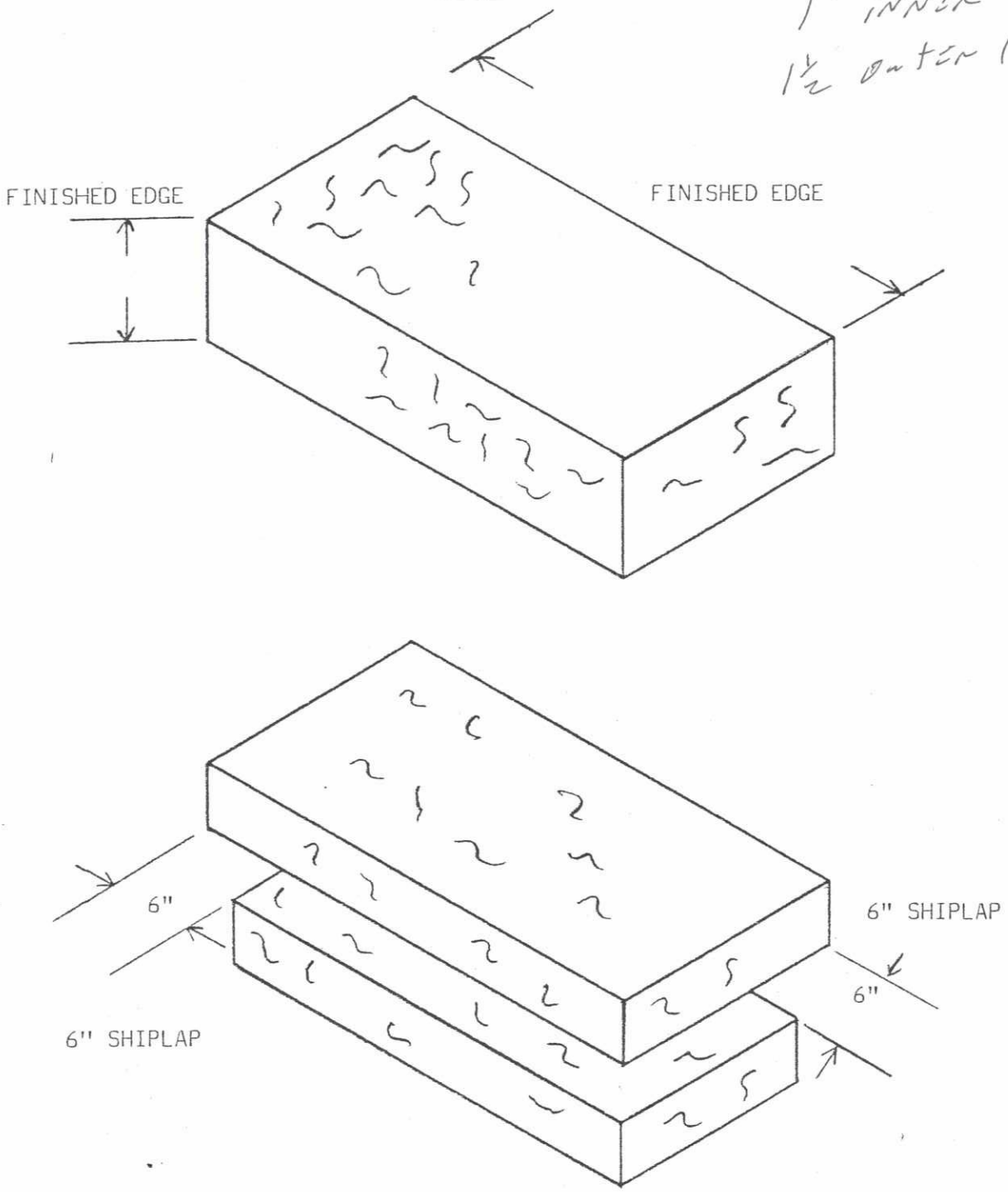

FIGURE 1

ISSUE DESIGNATION IN THIS COL. N INDICATES CURRENT CHANGE

INNER BLANKET ASSEMBLY

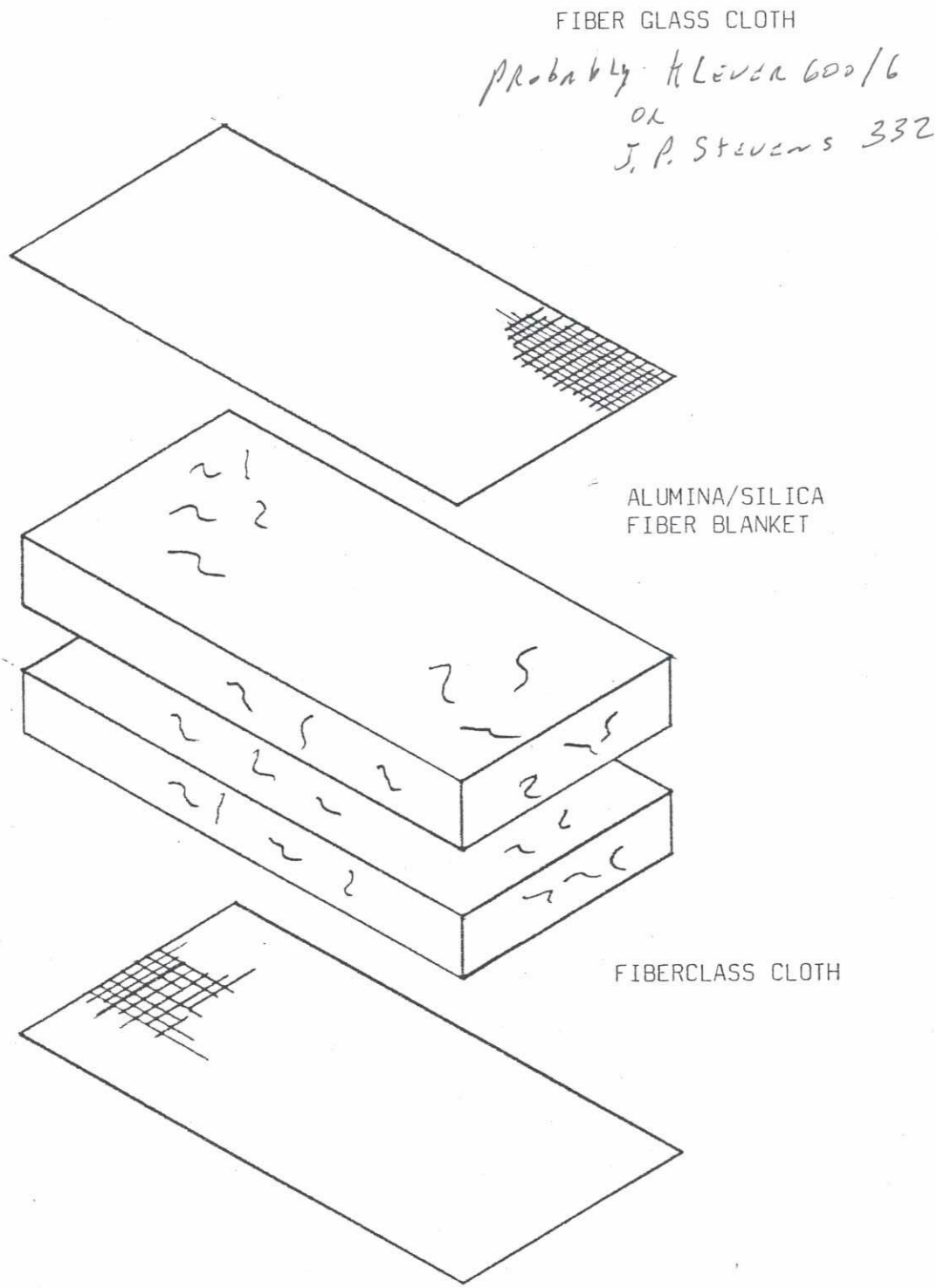

FIGURE 2

ISSUE DESIGNATION IN THIS CO N INDICATES CURRENT CHANGE

ISSUE DESIGNATION IN THIS COLUMN INDICATES CURRENT CHANGE

INNER BLANKET ASSEMBLY

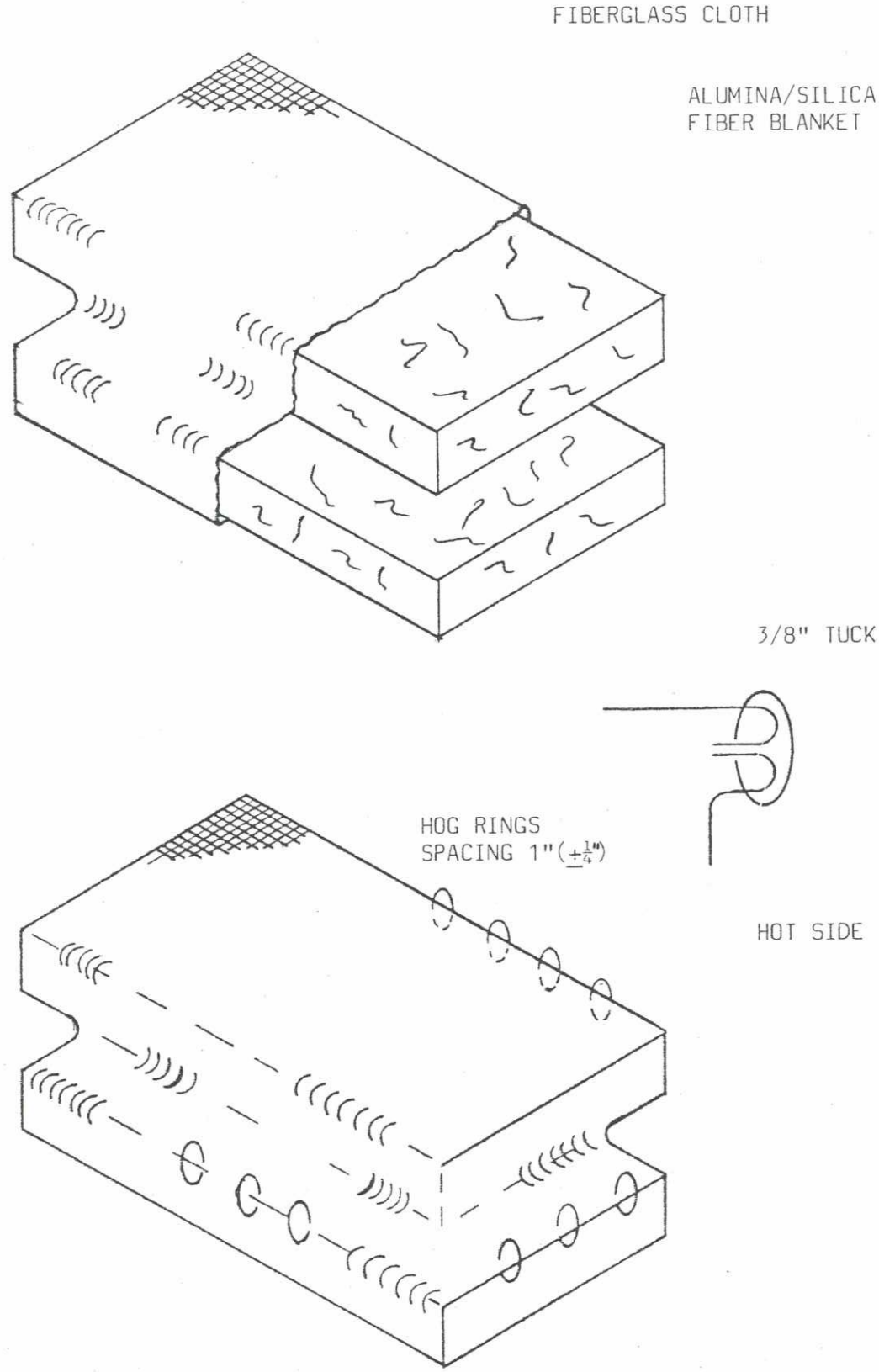

FIGURE 3

HONEY COMB TUBE ASSEMBLY

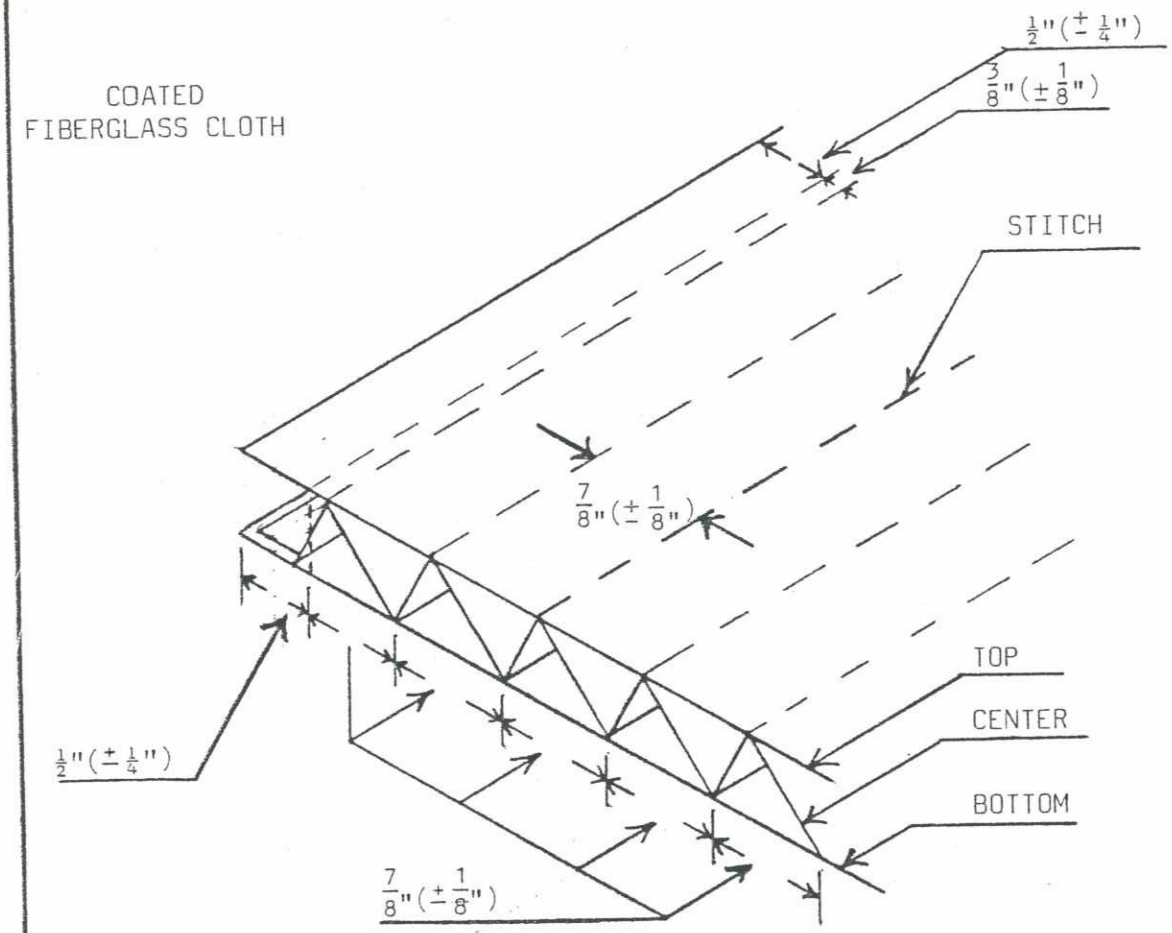

FIGURE 4

ISSUE DESIGNATION IN THIS CL N INDICATES CURRENT CHANGE

HONEY COMB AND/OR STRAIGHT TUBE POWDER ASSEMBLY

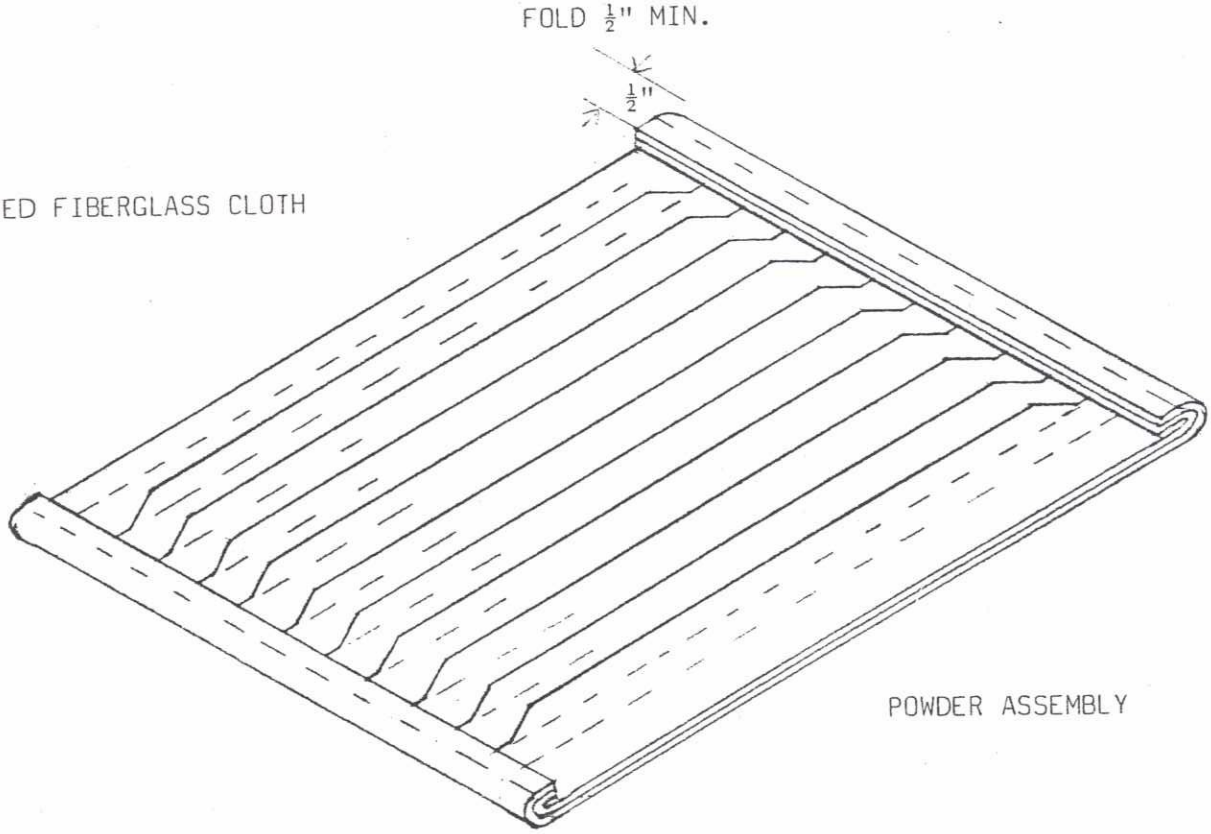

FIGURE 5

ISSUE DESIGNATION IN THIS COLUMN INDICATES CURRENT CHANGE

ISSUE DESIGNATION IN THIS L N INDICATES CURRENT CHANGE

STRAIGHT TUBE ASSEMBLY

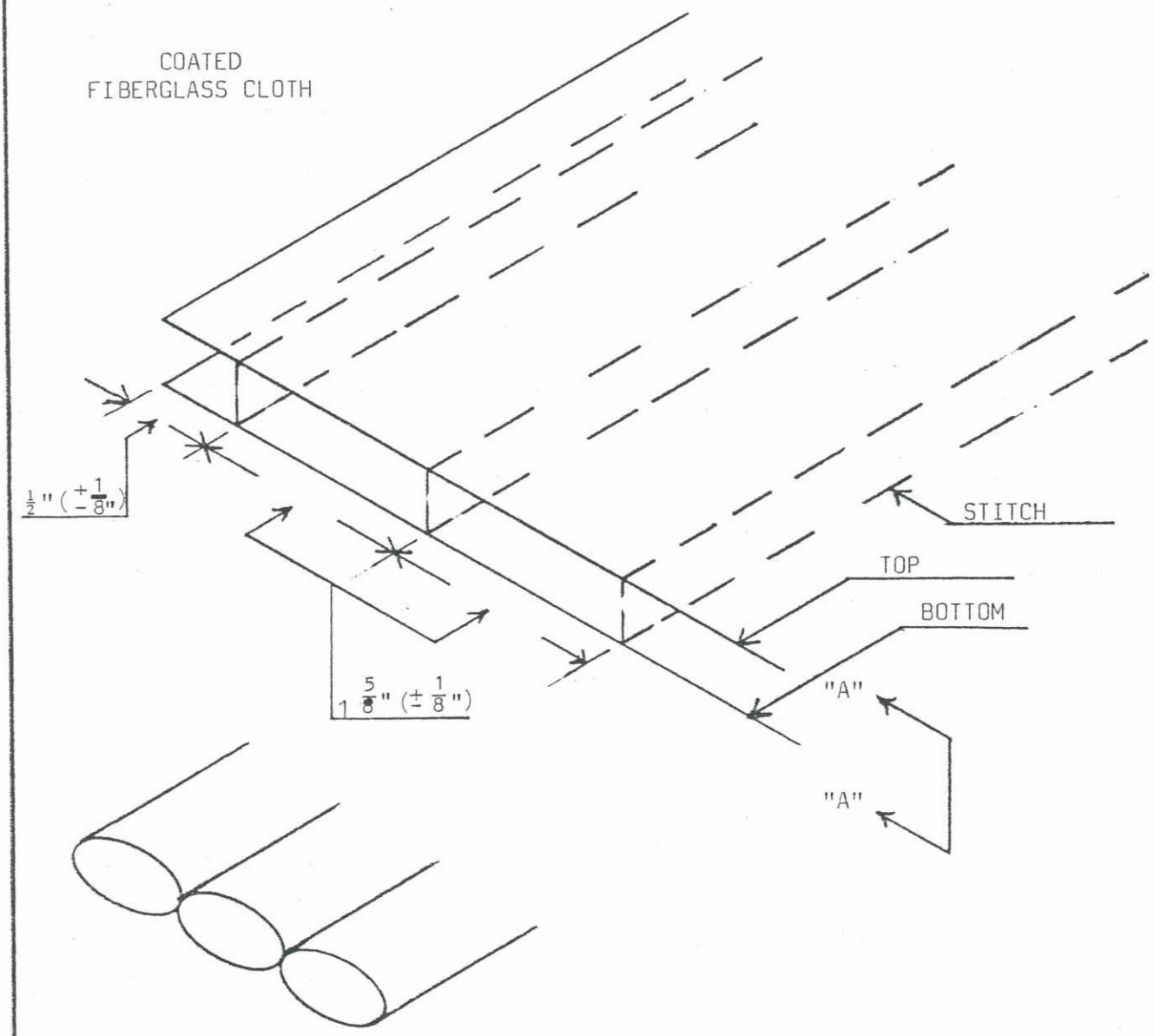

SECTION "A"-"A"

FIGURE 6

OUTER BLANKET ASSEMBLY

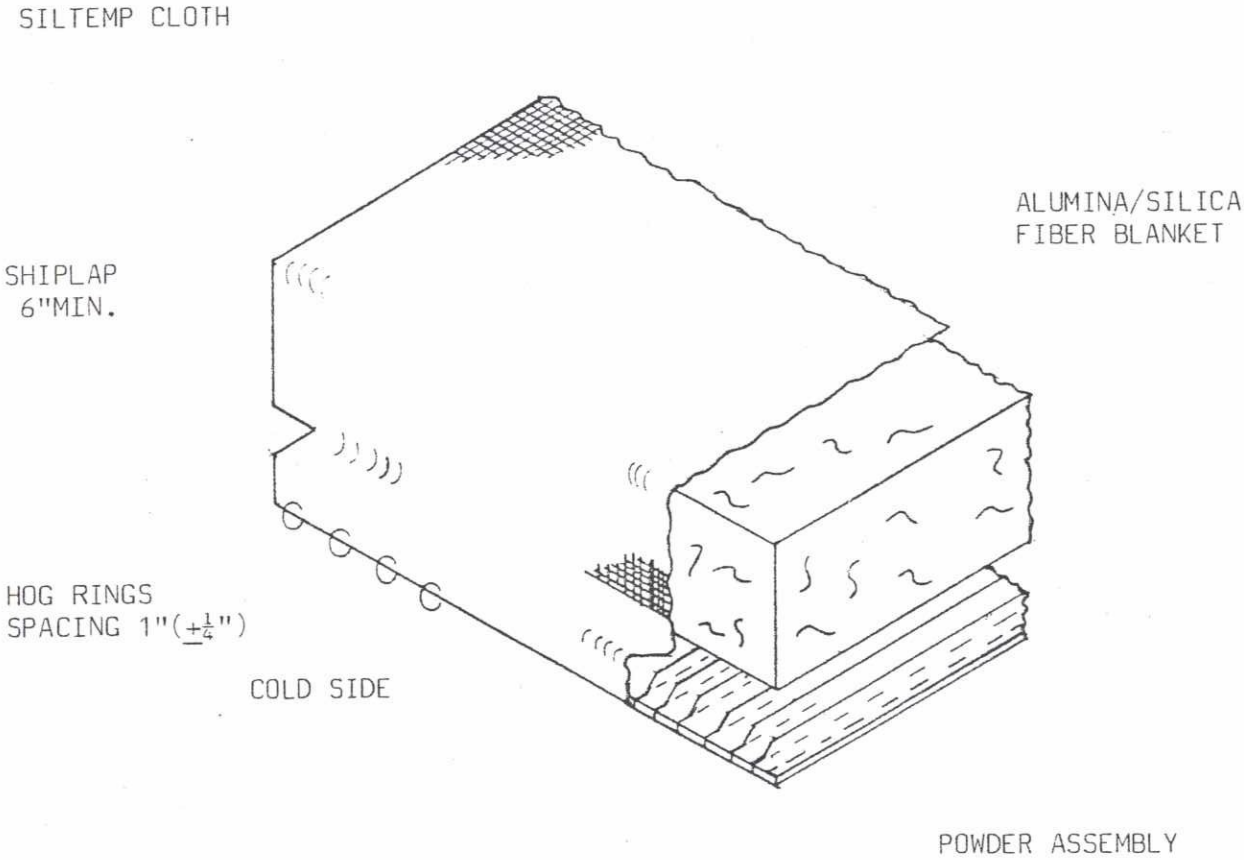

FIGURE 7

ISSUE DESIGNATION IN THIS C N INDICATES CURRENT CHANGE

ISSUE DESIGNATION IN THIS C. IN INDICATES CURRENT CHANGE

OUTER BLANKET ASSEMBLY

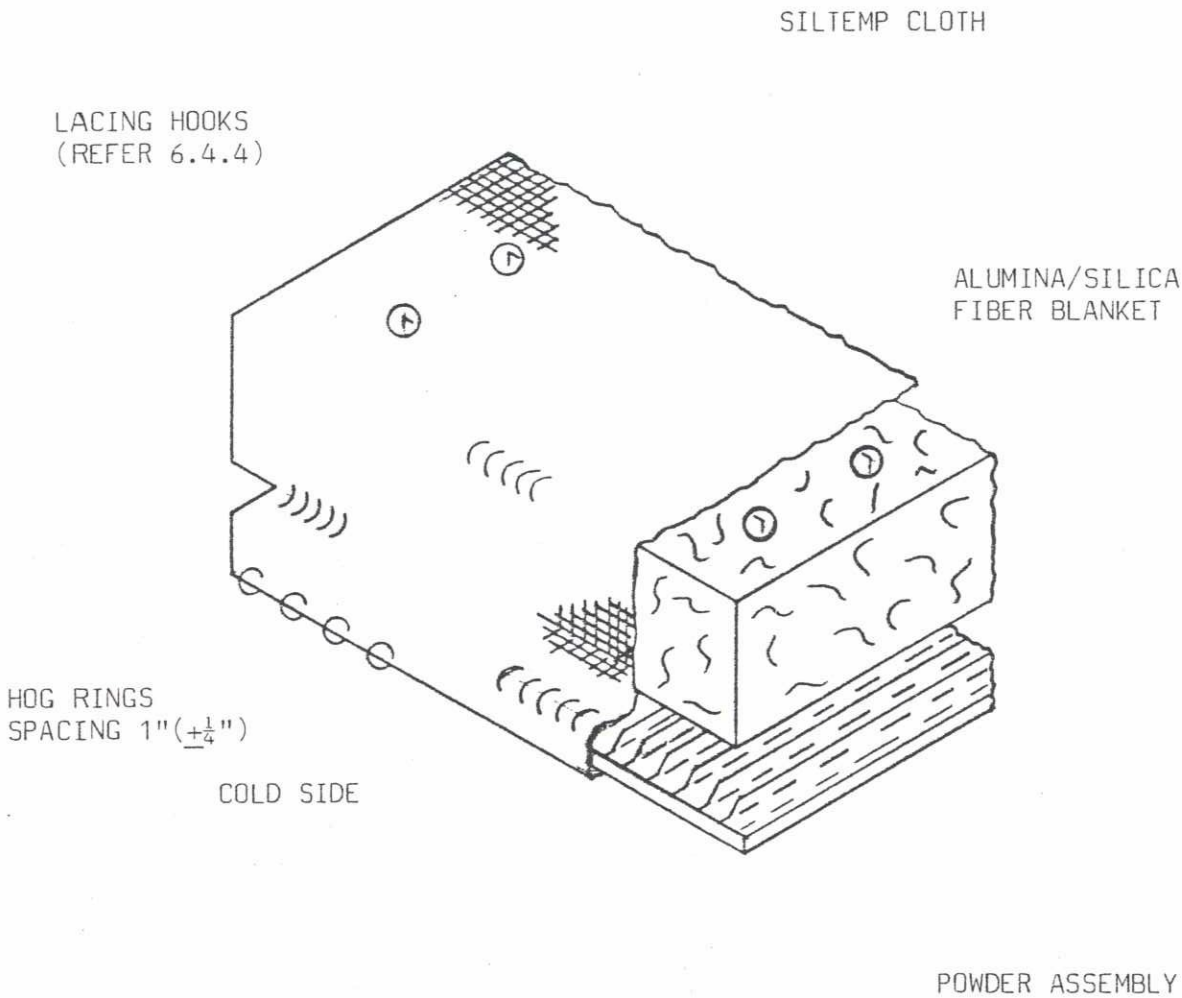

FIGURE 8

MULTIPLE ALUMINA/SILICA FIBER BLANKET

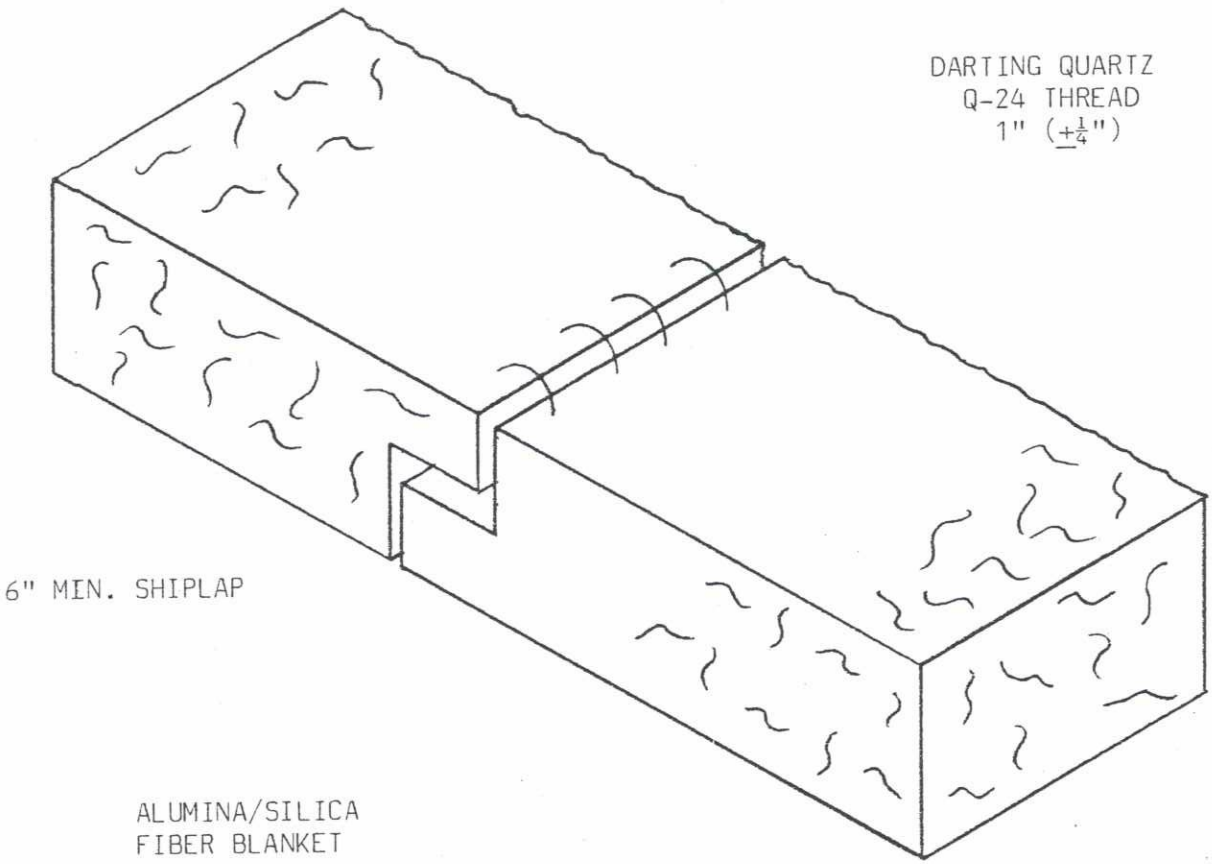

FIGURE 9

ISSUE DESIGNATION IN THIS C N INDICATES CURRENT CHANGE

ISSUE DESIGNATION IN THIS COLL INDICATES CURRENT CHANGE

INSTALLATION OF
THREE HOUR PROTECTIVE WRAP SYSTEMS
CONDUITS / THREE SIDED WRAP / CABLE DROPS

1.0 PURPOSE

To establish methods and guidelines for the installation of PROMATEC Three Hour Fire Protective Wrap Systems in accordance with established design criteria.

2.0 SCOPE

2.1 To provide methods and sequence steps for installation of inner blanket assemblies, foil barrier and the outer blanket assemblies.

2.2 To establish dimensional requirements for installation.

2.3 To provide requirements and methods for field repairs and modifications.

2.4 Inform craft personnel of the Quality Control inspection notification points to assure work does not proceed until such inspection is performed.

3.0 REFERENCE

3.1 QCP-0041, Installation Inspection of Three Hour Fire Protective Wrap Systems

3.2 Typical Design Details B-495 and B-496

4.0 DEFINITIONS

4.1 **INNER BLANKET** - total one (1") inch thickness of alumina silica blanket enveloped with fiberglass cloth.

4.2 **FOIL BARRIER** - .002 thick stainless steel foil.

4.3 **OUTER BLANKET** - a multi-layered outer blanket assembly consisting of a one and one-half (1-1/2") inch alumina silica blanket and a separate prefabricated fiberglass assembly containing a powdered ingredient with either both enveloped by a fire resistant outer fabric or as two separate components with alumina silica blanket enveloped with a fire resistant fabric.

5.0 RESPONSIBILITIES

5.1 The authorized Installer's ENGINEERING DEPARTMENT shall be responsible to define

the scope of work as prescribed on the applicable contract documents and provide the appropriate drawings, specifications, requirements, instructions, etc., to the department responsible for installation.

This department shall also be responsible to provide liaison with applicable client personnel and other internal departments to assure smooth flow of communication.

5.2 The authorized Installer's PRODUCTION DEPARTMENT shall be responsible for the identification and scheduling of work to be performed as defined on the documents furnished by Engineering.

5.3 The Installer's, as trained and certified by PROMATEC, shall be responsible for performance of installation activities herein prescribed.

5.4 The Installer's QUALITY CONTROL PERSONNEL, as trained and certified by PROMATEC, shall be responsible for appropriate inspection, documentation and monitoring.

6.0 PROCEDURE

6.1 Only approved materials as supplied by PROMATEC, issued under controlled conditions, shall be used in the installation, modification and repair of Three Hour Fire Protective Wrap System components.

6.2 Conduit/Junction Box Installation

6.2.1 Installation of Inner Blanket Assemblies
(Refer to FIRST STEP as shown on Figure 1)

6.2.1.1 Install first inner blanket around the conduit/junction box assuring that the shiplap joint is a tight as possible. Maximum allowable gap is one-half (1/2") inch.

6.2.1.2 Duct tape may be utilized to hold blanket firmly in place (duct tape may be applied completely around blanket to provide tape to tape adhesion).

6.2.1.3 Install subsequent blankets per 6.2.1.1 assuring that lengthwise shiplap joints are as tight as possible. Maximum allowable gap is one-half (1/2") inch.

6.2.1.4 Duct tape per 6.2.1.2.

6.2.1.5 Notify Quality Control for inspection prior to proceeding.

6.2.2 Installation of Stainless Steel Foil Barrier
(Refer to SECOND STEP as shown on Figure 1)

6.2.2.1 Install foil strips lengthwise around the conduit/junction box providing a MINIMUM six (6") inch overlap on ends and edges.

6.2.2.2 In cases where a six (6") inch overlap cannot be achieved due to conduit curvature, foil strips shall be installed with a minimum two (2") inch overlap.

ISSUE DESIGNATION IN THIS COLL NDICATES CURRENT CHANGE

ISSUE DESIGNATION IN THIS COLI INDICATES CURRENT CHANGE

6.2.2.3 Duct tape may be utilized to hold foil strips firmly in place. Duct tape and/or aluminum foil tape may be used at the edges of the strips if gap appears excessive due to conduit curvature.

6.2.2.4 Notify Quality Control for inspection prior to proceeding.

6.2.3 Installation of Outer Blanket Assemblies
Refer to THIRD STEP as shown on Figure 2)

6.2.3.1 Install first outer blanket around conduit/junction box assuring that the shiplap joint is as tight as possible. Maximum allowable gap is one-half (1/2") inch.

6.2.3.2 Connect ends by fastening 16 gauge stainless steel tie wire between corresponding lacing hook. Recheck final positioning and tighten securely exercising caution to prevent blanket damage.

NOTE: An additional tie wire may be used after blanket is in final position as necessary to assure a snug fit.

F 6.2.3.3 Install subsequent blankets per 6.2.3.1 and 6.2.3.2 assuring that lengthwise shiplap joints are properly aligned.

F 6.2.3.4 Connect adjoining blankets at circumferential shiplap joints by fastening 16 gauge stainless steel tie wire between each corresponding lacing hook.

NOTE: An additional tie wire may be used after blanket is in final position as necessary to assure a snug fit.

6.2.3.5 Notify Quality Control for final inspection.

6.3 Three Sided Wrap Installation
(Refer to Typical Design Drawings B-495 and B-496)

A three sided or similar installation is required in the event that the conduit or a junction box is installed in close proximity to a wall or floor preventing installation of a wrap surrounding the conduits.

This type of installation requires attachment to concrete surface utilizing site approved anchoring devices as outlined herein. If anchors are installed by others, notify Quality Control for inspection per 6.3.3 prior to proceeding with blanket installation.

6.3.1 Install site approved concrete anchors (minimum 1/4" diameter recommended) on maximum twelve (12") inch centers. Distance from sides of conduit or junction boxes to be determined by Engineering.

Factors to consider are: 1) blanket size, 2) surface characteristics of concrete, 3) number and type of interferences.

6.3.2 Anchors should be pre-set before blankets are impaled onto studs.

ISSUE DESIGNATION IN THIS COLI ...NDICATES CURRENT CHANGE

6.3.3 Notify Quality Control for inspection before proceeding.

6.3.4 Place inner blanket around conduit or junction box and impale on studs going from side to side to assure proper alignment. Maintain a one (1") inch nominal thickness of inner blanket.

6.3.5 Duct tape may be utilized to keep joints flush and to hold blanket(s) in position.

6.3.6 Edge of inner blanket shall extend a minimum of two (2") inches from center of studs.

6.3.7 Notify Quality Control for inspection before proceeding.

6.3.8 Install stainless steel foil barrier over inner blanket providing a MINIMUM six (6") inch overlap on all joints. In cases where six (6") inch overlap cannot be achieved due to sharp curvatures install foil strips with a minimum two (2") inch overlap.

6.3.9 Impale foil over studs allowing for the two (2") inch minimum requirements.

6.3.10 Duct tape may be utilized to hold foil firmly in place. Aluminum foil tape may be utilized if gaps are excessive.

6.3.11 Notify Quality Control for inspection before proceeding.

6.3.12 Install outer blanket over foil barrier and impale over studs. Edge of outer blanket shall extend a minimum of two (2") inches over studs. Maintain a two and one-half (2-1/2") inch nominal thickness of outer blanket.

6.3.13 Install fender washers and/or B72 strut and/or flat bar retainer strap over studs assuring that blanket assemblies are not wrinkled or bunched.

6.3.14 Install appropriate sized locknuts (or double nuts) and securely tighten. Do not over-tighten. Depression of blanket shall not exceed three-fourths (3/4") inch.

6.3.15 Connect adjacent blankets or edges of a prefabricated blanket together with 16 gauge stainless steel tie wire between each corresponding lacing hook.

NOTE: An additional tie wire may be used after blanket is in final position as necessary to assure a snug fit.

6.3.16 Recheck final positioning and tighten securely. Exercise caution to prevent damage to blanket assemblies.

6.3.17 Notify Quality Control for final inspection.

6.4 Field Modifications and Repairs

6.4.1 Should an opening in the Wrap System exist due to installation conditions, fill with appropriate inner blanket, alumina silica blanket/fiber, foil barrier and/or outer blanket materials. Engineering to determine size of such small assemblies required.

ISSUE DESIGNATION IN THIS COL INDICATES CURRENT CHANGE

If hog rings are to be used to close blanket assembly, rings are to be installed on one (1") inch MAXIMUM centers. Q-24 Quartz Thread may be used in lieu of hog rings for inner and/or outer blanket.

Site craft installers to fabricate under supervision of Engineering. Quality Control to provide inspection of such fabrication and/or installation.

6.4.2 Non-electrical interferences (piping, hangers, supports, etc.) shall be protected with a nominal four (4") inch thickness of alumina silica blanket. The outer layer of alumina silica blanket shall be enveloped with an approved outer fabric. Wrap for a minimum distance of eighteen (18") inches or for full length of interference if less than eighteen (18") inches as shown on Figure 3, page 11 of this procedure. Install a sufficient number of lacing hooks and tie wire to close longitudinal seam and to secure wrap to primary system.

6.4.3 When a protected conduit is in close proximity to an electrical cable tray, the interfering portion of the tray shall be included within the conduit wrap system.

Insert alumina silica blanket/fiber around cables for a minimum distance of eighteen (18") inches from each side of the protected conduit as shown on Figure 4, page 12 of this procedure.

6.4.4 Craft installers shall repair damaged blanket assemblies under supervision of Engineering. Only acceptable materials shall be utilized.

6.4.4.1 Patches of proper fabric type shall be cut to a size sufficient to cover a tear or hole overlapping a minimum of two (2") inches onto undamaged fabric. Patches shall have a finished edge on all sides. Install as shown on Figure 5, page 13 of this procedure.

NOTE: Small tears not exceeding two (2") inches in length can be loop stitched with Q-24 thread at maximum spacing of one-half (1/2") inch. Holes or tears in fiberglass cloth and outer fabric not exceeding one (1") inch shall not require repair.

6.4.4.2 If inner alumina silica blanket material is damaged or has a void, add additional material as necessary.

6.4.4.3 Engineering concurrence shall be obtained for any repair activities. Upon completion, notify Quality Control for inspection.

6.4.5 Additional lacing hooks may be added as needed in conjunction with original installation or modification.

6.5 Cable Drop Installation

6.5.1 Installation of Inner Blanket Assemblies
(Refer to first step as shown in Figure 6)

6.5.1.1 Bundle cables into as nearly a round configuration as feasible. Duct tape or cable tie wraps may be used to maintain this configuration.

ISSUE DESIGNATION IN THIS COLI ...DICATES CURRENT CHANGE

6.5.1.2 Install first inner blanket around cable bundle assuring that shiplap joint is as tight as possible. Maximum allowable gap is one-half (1/2") inch.

6.5.1.3 Duct tape may be utilized to hold blanket firmly in place (duct tape may be applied completely around blanket to provide tape to tape adhesion).

6.5.1.4 Install subsequent blankets (if required) per 6.5.1.2 assuring the lengthwise shiplap joints are as tight as possible.

6.5.1.5 Duct tape per 6.5.1.3.

6.5.1.6 Notify Quality Control for inspection prior to proceeding.

6.5.2 Installation of Stainless Steel Foil Barrier
(Refer to second step as shown in Figure 6)

6.5.2.1 Install foil strips length wise around the cable bundle providing a minimum six (6") inch overlap on ends and edges.

6.5.2.2 Duct tape may be utilized to hold foil strips firmly in place. Duct tape and/or aluminum foil tape may be used at the edges of the strips if gaps appear excessive due to curvature of the cable drop bundle.

6.5.2.3 Notify Quality Control for inspection prior to proceeding.

6.5.3 Installation of Outer Blanket Assemblies
(Refer to third step as shown on Figure 7)

6.5.3.1 Install first outer blanket around conduit assuring that the shiplap joint is as tight as possible. Maximum allowable gap is one-half (1/2") inch.

6.5.3.2 Connect ends by fastening 16 gauge stainless steel tie wire between each corresponding lacing hook. Recheck final positioning and tighten securely exercising caution to prevent blanket damage.

NOTE: An additional tie wire may be used after blanket is in final position as necessary to assure a snug fit.

6.5.3.3 Install subsequent blankets per 6.2.3.1 and 6.2.3.2 assuring that lengthwise shiplap joints are properly aligned.

6.5.3.4 Connect adjoining blankets at circumferential shiplap joints by fastening 16 gauge stainless steel tie wire between each corresponding lacing hook.

NOTE: An additional tie wire may be used after blanket is in final position as necessary to assure a snug fit.

6.5.3.5 Notify Quality Control for final inspection.

6.6 Alternate method for installing outer blanket assemblies.

ISSUE DESIGNATION IN THIS COLL ..DICATES CURRENT CHANGE

6.6.1 Wrap tube assembly around foil barrier assuring that ends abut with no apparent gaps. Install approved tape completely around assembly with tape-to tape adhesion at sufficient spacing to assure no gaps at longitudinal joint.

6.6.2 Install subsequent tube assemblies per 6.6.1 assuring that circumferential joints firmly abut with no apparent gaps and that longitudinal joints are properly aligned. Apply duct tape lengthwise across each circumferential joint to hold in place.

6.6.3 Notify Quality Control for inspection prior to proceeding.

6.6.4 Install alumina silica blanket around tube assembly assuring that ends abut with no apparent gaps. Stagger longitudinal and circumferential joints a minimum six (6") inches from respective tube assembly joints.

6.6.5 Connect longitudinal joints by fastening 16 gauge stainless steel tie wires between each adjacent lacing hook.

NOTE: An additional tie wire may be used after blanket is in final position as necessary to assure a snug fit.

6.6.6 Notify Quality Control for inspection after each blanket is installed.

6.6.7 Install subsequent blankets as noted above. Stagger circumferential joints a minimum six (6") inches from tube assembly joints.

6.6.8 Connect adjoining blankets by fastening 16 gauge stainless steel tie wire between each adjacent lacing hook at circumferential joints assuring tight fit with no apparent gaps.

NOTE: An additional tie wire may be used after blanket is in final position as necessary to assure a snug fit.

6.7 Raceway Identification Tags

6.7.1 Upon completion of Wrap System installation, raceway identification (as furnished by client) shall be affixed on both ends with stainless steel tie wire as follows:

6.7.1.1 If conduit funs five (5') feet or longer, affix tags at all entrance and exit points (walls, floors) and at the origin and destination points (cable tray, junction box, etc.).

6.7.1.2 If conduit run is less than five (5') feet, affix one tag at a central location or at the most visible location of the conduit. Conduits shall be identified at intervals not greater than fifteen (15') feet.

7.0 ATTACHMENTS

None

ISSUE DESIGNATION IN THIS COLL INDICATES CURRENT CHANGE

FIRST STEP

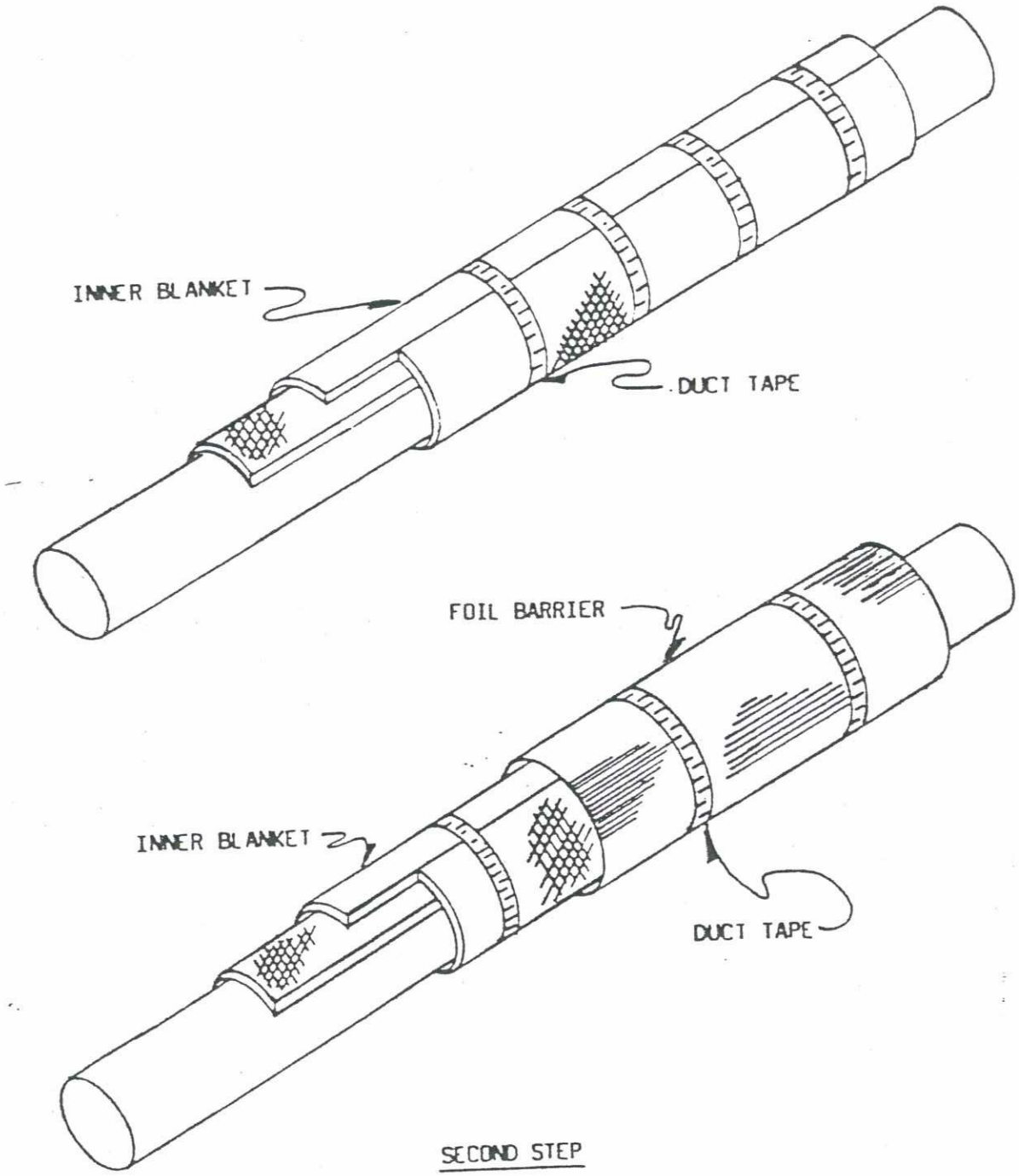

SECOND STEP

FIGURE - 1

ISSUE DESIGNATION IN THIS COL ...NDICATES CURRENT CHANGE

THIRD STEP

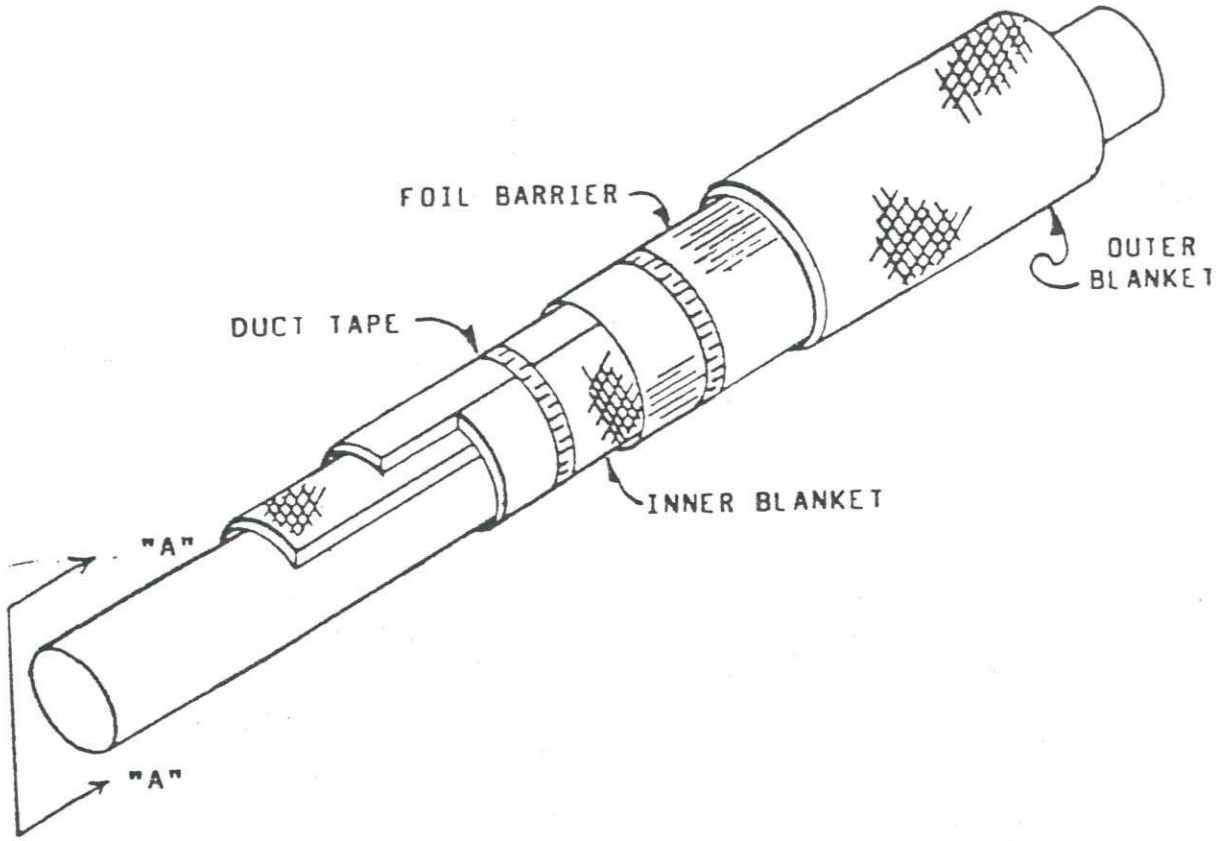

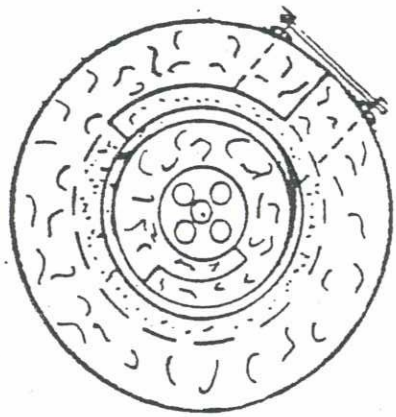

SECTION "A"-"A"

FIGURE - 2

ISSUE DESIGNATION IN THIS COLL INDICATES CURRENT CHANGE

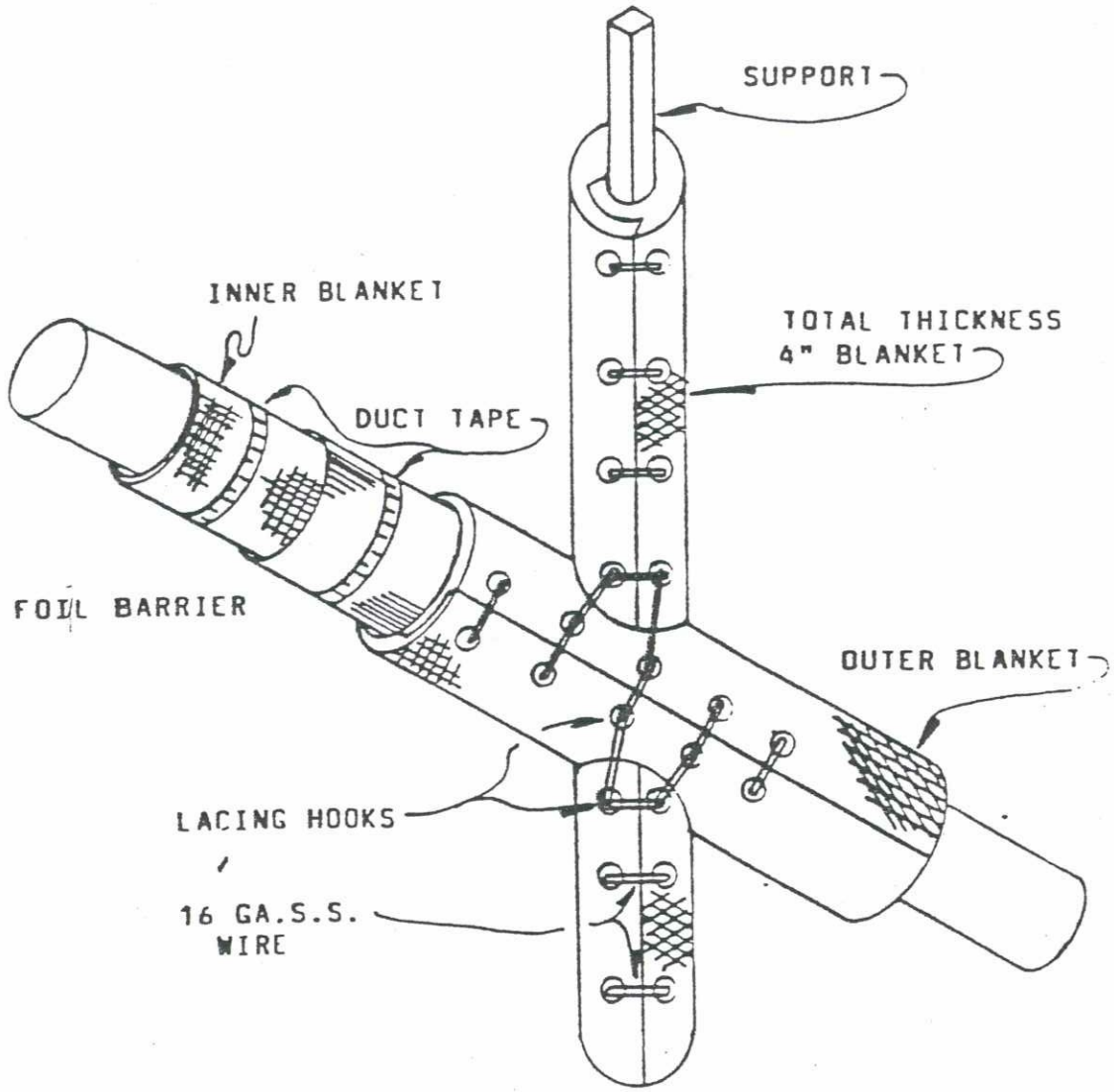

FIGURE - 3

ISSUE DESIGNATION IN THIS COL ..NDICATES CURRENT CHANGE

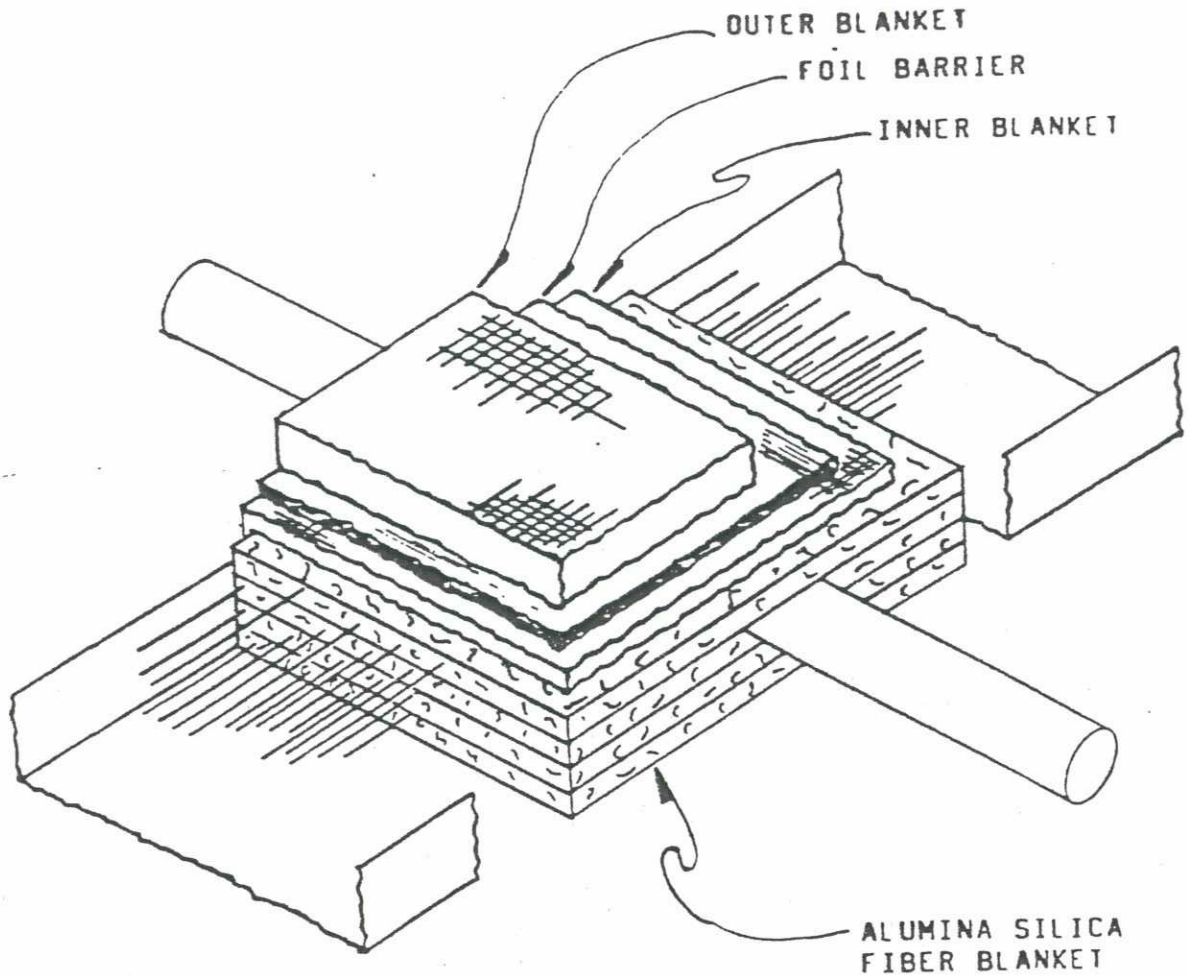

FIGURE - 4

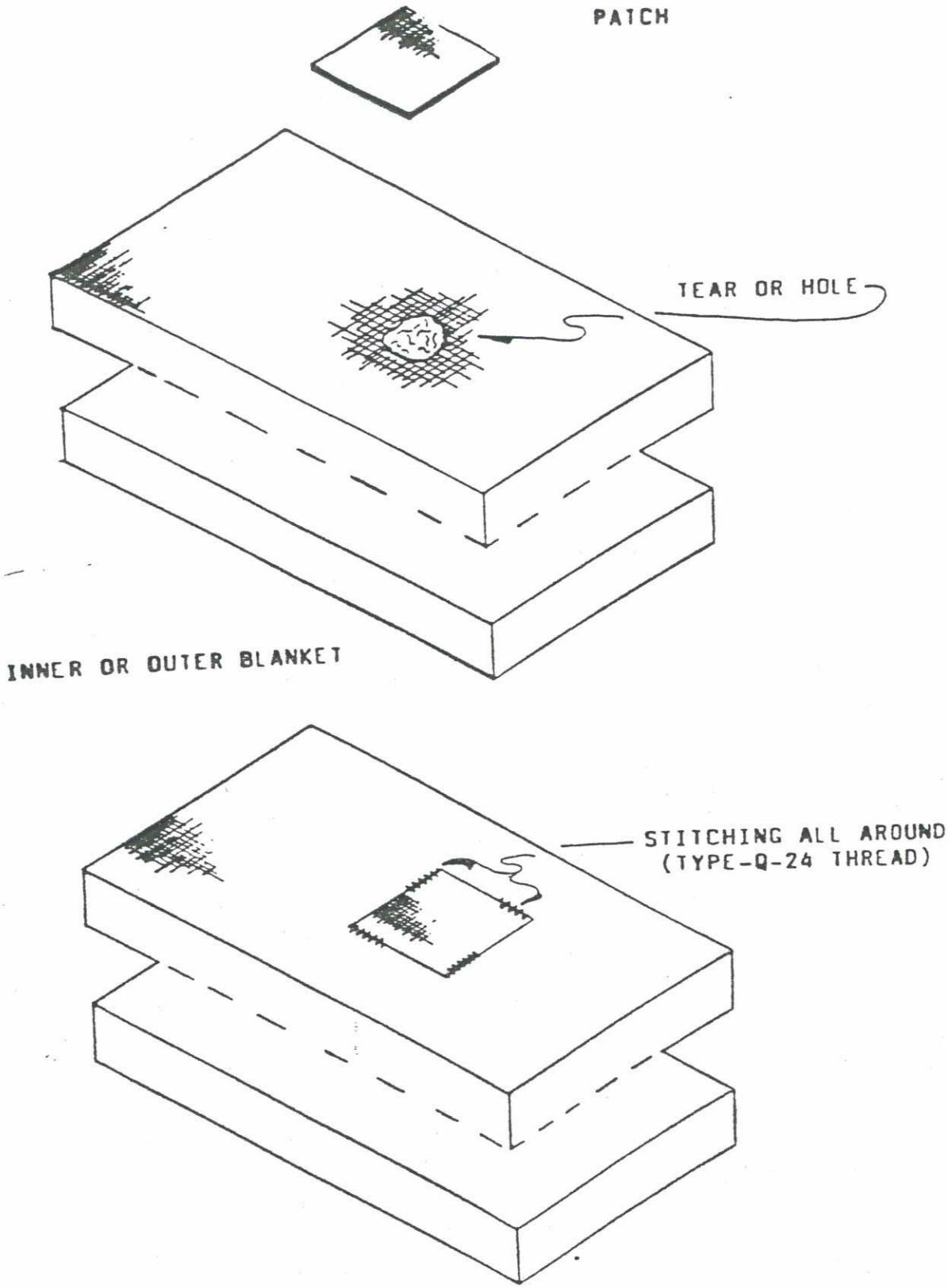

FIGURE - 5

ISSUE DESIGNATION IN THIS COL' .DICATES CURRENT CHANGE

ISSUE DESIGNATION IN THIS COLI JICATES CURRENT CHANGE

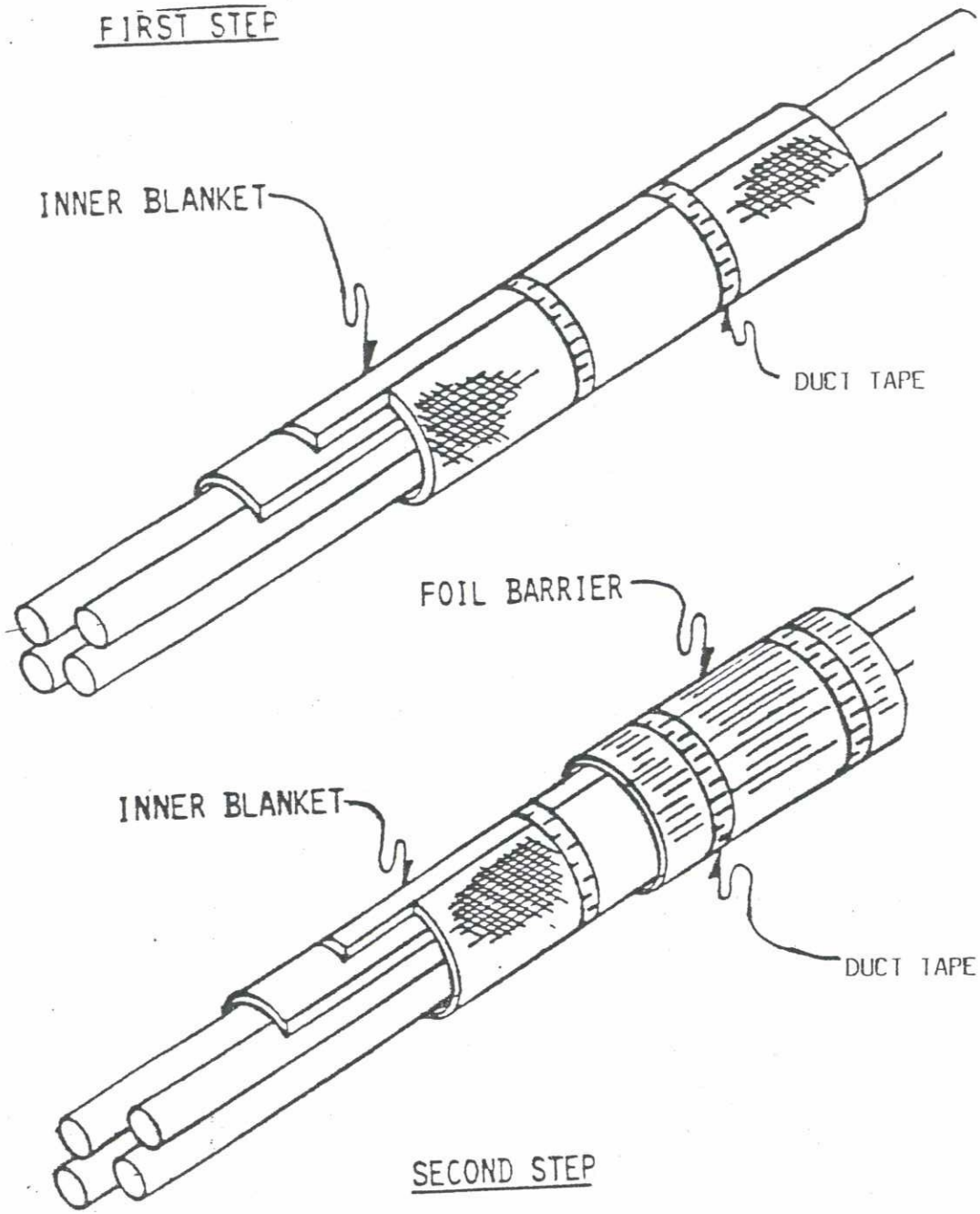

FIGURE 6

ISSUE DESIGNATION IN THIS COL INDICATES CURRENT CHANGE

THIRD STEP

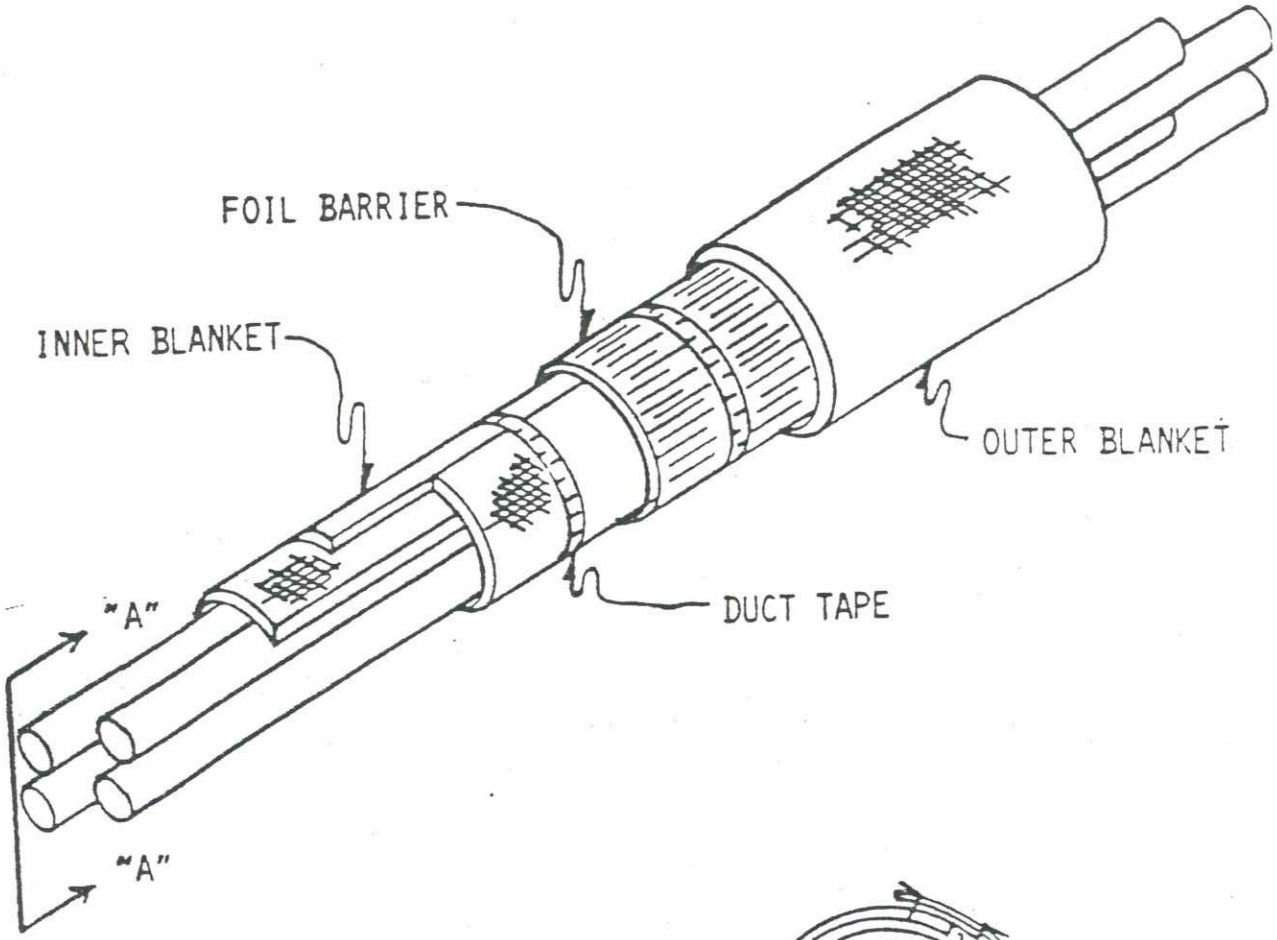

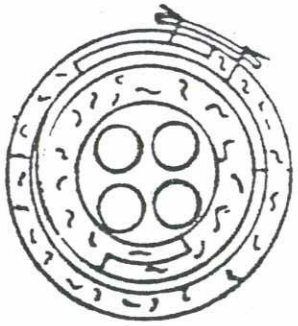

SECTION "A" - "A"

FIGURE 7

ISSUE DESIGNATION IN THIS COLUMN INDICATES CURRENT CHANGE

FABRICATION INSPECTION FOR HEMYC PROTECTIVE WRAP COMPONENTS

1.0 PURPOSE

The purpose of this procedure is to assure that the manufacture of the HEMYC Protective Wrap Components is consistent with the system as tested on the various qualification tests. The Fire Qualification Test, referenced as CTP-1026, consisted of a one (1) hour fire exposure, per ASTM E-119 criteria including hose stream test in accordance with the ANI Information Bulletin No. 5(79) entitled, "ANI/MAERP Standard Fire Endurance Test Method to Qualify a Protective Envelope for Class IE Electrical Circuits".

2.0 SCOPE

This procedure provides the methods and guidelines for the inspection and verification activities performed to ascertain the manufacture and/or fabrication of the protective wrap components is within acceptable standards.

3.0 REFERENCES

3.1 IP-8400.105, Fabrication of HEMYC Cable Protection System Components

3.2 CTP-1026, HEMYC Fire Qualification Test

3.3 American Nuclear Insurers Acceptance dated 08/02/82

4.0 DEFINITIONS

Refer to Quality Assurance/Quality Control terms and definitions contained in the back of the PROMATEC Quality Assurance Program.

5.0 RESPONSIBILITIES

B 5.1 When fabrication is performed at jobsite, the Installer's QUALITY CONTROL PERSONNEL, as trained and certified by PROMATEC, shall be responsible for appropriate inspection, documentation and monitoring activities.

B When fabrication is performed at a separate manufacturing facility, the facility's INSPECTOR shall be responsible for the performance of these activities.

B 5.2 The DOCUMENT CONTROL COORDINATOR shall be responsible to implement and maintain an adequate filing system of the documentation provided by jobsites or as provided from the manufacturing facility Inspector.

ISSUE DESIGNATION IN THIS COLUMN INDICATES CURRENT CHANGE

6.0 PROCEDURE

B The assigned Quality Control Inspector shall perform the verification activities herein prescribed. The Fabrication Inspection Register (QC-61) shall be completed as defined in Item 7.1 of this procedure.

6.1 HOLD POINT ONE

6.1.1 All materials utilized in the construction of the specific order shall have been previously accepted as outlined in QCP-0008. This includes the verification that applicable certification documents were received with shipment or are available at PROMATEC.

6.1.2 If certification documents are not available with the material, an Inspection Report (Form QC-20) shall be instrumented as outlined in QCP-0019. PROMATEC Quality Assurance may elect to authorize use of the subject material after verification from manufacturer that required certification documents are either in transit or have been reviewed and accepted by PROMATEC.

6.1.3 Only approved materials as listed below shall be utilized in the fabrication of HEMYC Cable Protection System Components.

ACCEPTABLE MATERIALS

a. External Fabric

1. SILTEMP WR84CSR Water Repellent, Thermal Barrier Cloth .030 nom. thickness, 18oz/yd(2).

2. Or Approved equal.

b. Internal Fabric

1. Klever 600/6 or J.P. Stevens #332 Fiberglass Cloth, 49" width, 13oz/yd(2).

2. Or Approved equal.

(Internal Fabric may be used on the non-fire side of protection blanket as necessary. If used, external fabric must overlap a minimum of six (6") inches on to non-fire side.)

c. Internal Filler

1. Johns-Manville Cerablanket; 6 or 8 lb density; 1.5 and/or 2.0 inch thickness.

Or

2. Babcock & Wilcox Ceramic Fiber blanket; 6 or 8 lb density; 1.5 and/or 2.0 inch thickness.

Or

3. Approved equal.

d. Thread

1. Astroquartz Sewing Thread Type Q-24 Teflon coated approximately .020" diameter; Breaking strength - 20lbs.

Or

2. Alphaquartz Sewing Thread Type Q-24 Teflon coated approximately .020" diameter; Breaking strength - 20lbs.

Or

3. Approved equal.

6.2 HOLD POINT TWO

Refer to IP-8400.105 for specific fabrication requirements.

In Process Inspection

6.2.1 The assigned Quality Control Inspector shall periodically inspect on a random basis, compliance to the manufacture of Protective Wrap Components as outlined in Items 6.3.1, 6.3.2 and 6.3.3 of IP-8400.105.

As a minimum requirement, all wrap assemblies constructed shall be 100% Quality Control inspected the first week of fabrication, and a minimum of one day's production per week thereafter.

6.2.2 Verification that each wrap assembly is properly identified and marked as specified in Item 6.5 of IP-8400.105 shall be performed.

B 6.2.3 Verification that the Traceability ID Register (QC-60) is accurately completed for each wrap assembly as defined in Item 7.3 of this procedure.

6.3 HOLD POINT THREE

6.3.1 Each wrap component (blanket) shall be physically inspected by the assigned Quality Control Inspector prior to final acceptance from fabricator. This inspection shall verify conformance to the finished dimension requirements as specified on the applicable fabrication order.

7.0 ATTACHMENTS

7.1 Instructions for the completion of Form QC-61, Fabrication Inspection Register

7.2 Form QC-61

7.3 Instructions for the completion of Form QC-60, Traceability ID Register

7.4 Form QC-60

ISSUE DESIGNATION IN THIS COLUMN INDICATES CURRENT CHANGE

QCP-10002
ATTACHMENT 7.1

INSTRUCTIONS FOR COMPLETION OF FABRICATION INSPECTION REGISTER (FORM QC-61)

1. REPORT NUMBER - This is a two part number utilizing the numerical portion of the Project Number and the numerical sequence of the individual sequence of the individual report sheet, i.e., 274/03. This defines the third QC-61 used on Project No. FS-274.

2. PROJECT NAME - Name of Project or Plant.

3. PROJECT NUMBER - The PROMATEC Job Number (i.e., 0027-CM).

4. FABRICATOR - The name of the company fabricating blanket.

5. BLANKET NUMBER/ BLANKET FAB ORDER NO. - Identification of assigned blanket number per blanket fab order (Form QC-59).

6. QC-60 NUMBER - Number of the QC-60, Traceability ID Register for reference of traceability.

QC HOLD POINT ONE - MATERIAL RECEIVING

7. ACCEPT/REJECT Insert appropriate check mark upon verification that only accepted materials as prescribed in QCP-10002 are utilized.

8. BY - Initials of the assigned Quality Control Representative performing this inspection.

9. DATE - Date of performance of this inspection.

QC HOLD POINT TWO - IN PROCESS INSPECTION

The assigned Quality Control Inspector shall periodically spot check on a random basis, compliance to the fabrication of Protective Wrap Components as outlined in IP-8400.105.

As a minimum requirement, all wrap assemblies constructed shall be 100% Q.C. inspected the first scheduled week of fabrication, and a minimum of one day's production per week thereafter.

When this inspection is performed, Items 12 and 13 (below) shall be completed.

10. ACCEPT/REJECT -

(a.) External and Internal fabrics are cut to proper dimensions, as determined by fabricator to assure proper finished dimensions as specified on the applicable fabrication order (Form QC-59).

(b.) Stitching is performed per IP-8400.105, Item 6.3.1.

(c.) Filler material is proper size to assure proper finished dimension per IP-8400.105, Item 6.3.2.

(d.) Fabric at open end of envelope is rolled under and double stitched per IP-8400.105, Item 6.3.3.

(e.) Longitudinal stitching performed per IP-8400.105, Item 6.3.4.

(f.) Identification markings are performed per IP-8400.105, Item 6.5.

11. BY - Initials of inspector performing documentation.

12. DATE - Date of documentation of QC HOLD POINT TWO

QC HOLD POINT THREE & FINAL ACCEPTANCE

13. ACCEPT/REJECT - Insert appropriate check mark upon acceptance or rejection of Completed Wrap Assembly.

14. BY - Initials of inspector performing inspection.

15. DATE - Date of Final Acceptance of Completed Wrap Assembly.

PROMATEC

PROGRESSIVE MATERIALS AND TECHNOLOGIES, INC.

FABRICATION INSPECTION REGISTER

REPORT NUMBER

PROJECT NAME (2)

PROJECT NUMBER (3)

FABRICATOR (4)

MT BARRIER WRAP	FORM	HOLD POINT ONE				HOLD POINT TWO				HOLD POINT THREE			
COMPONENT / BLANKET	QC-60	MATERIAL INSPECTION				FABRICATION INSPECTION				FINAL INSPECTION			
IDENTIFICATION NUMBER	NUMBER	REJECT	ACCEPT	BY	DATE	REJECT	ACCEPT	BY	DATE	REJECT	ACCEPT	BY	DATE
(5)	(6)	(7)		(8)	(9)	(10)		(11)	(12)	(13)		(14)	(15)

QCP-10002
B ISSUE

ATTACHMENT 7.2

QCP-10002
ATTACHMENT 7.3

INSTRUCTIONS FOR COMPLETION OF TRACEABILITY ID REGISTER (FORM QC-60)

1.	REPORT NUMBER -	This is a two part number utilizing the numerical portion of the Project Number and the numerical sequence of the individual sequence of the individual report sheet, i.e., 274/02. This defines the second QC-60 used on Project No. FS-274.
2.	PROJECT NAME -	Name of Project or Plant.
3.	PROJECT NUMBER -	The PROMATEC Job Number (i.e., 0027-CM).
4.	FABRICATOR -	The name of the company fabricating blanket.
5.	BLANKET NUMBER/ BLANKET FAB ORDER NO. -	Identification of assigned blanket number per blanket fab order (Form QC-59).
6.	EXTERNAL FABRIC -	Name of external fabric manufacturing company, type of fabric, lot number of external fabric and receiving report number.
7.	INTERNAL FABRIC -	Name of internal fabric manufacturing company, type of fabric, lot number of internal fabric and receiving report number.
8 & 9.	FILLER MATERIAL -	Name of filler material manufacturing company, type of material, lot number of filler material and receiving report number.
10.	THREAD -	Name of thread manufacturing company, type of material, lot number of thread and receiving report number.
11.	HARDWARE -	Types of hardware and receiving report numbers.
12.	INSPECTOR -	Initials of inspector performing documentation, and date inspection performed.

PROMATEC

PROGRESSIVE MATERIALS AND TECHNOLOGIES, INC.

TRACEABILITY ID REGISTER

REPORT NUMBER 1

PROJECT NAME 2

PROJECT NUMBER 3

FABRICATOR 4

MT BARRIER WRAP	EXTERNAL FABRIC		INTERNAL FABRIC		FILLER MATERIAL		FILLER MATERIAL		THREAD		HARDWARE		INSPECTOR
MFG													
TYPE													
IDENTIFICATION NO.	I.D. NO.	R.R.#	I.D. NO.	R.R.#	I.D. NO.	R.R.#	I.D. NO.	R.R.#	I.D. NO.	R.R.#	R.R.#	R.R.#	BY / DATE
5	6		7		8		9		10		11		12

QCP-10002
ISSUE B

ATTACHMENT 7.4

ISSUE DESIGNATION IN THIS COLL INDICATES CURRENT CHANGE

INSTALLATION INSPECTION OF CRITERIA FOR HEMYC PROTECTIVE WRAP COMPONENTS

1.0 PURPOSE

The purpose of this procedure is to assure that the installation of the HEMYC Protective Wrap System components is inspected to verify consistency with the system as tested on the various qualification tests. The Fire Qualification Test, referenced as CTP-1026, consisted of a One (1) Hour Fire Exposure, per ASTM-119 criteria, including hose stream test in accordance with the American Nuclear Insurers Information Bulletin No. 5(79) entitled, "ANI/MAERP Standard Fire Endurance Test Method to Qualify a Protective Envelope for Class IE Electrical Circuits."

2.0 SCOPE

This procedure provides the inspection criteria to enable the assigned Quality Control Inspector to perform adequate verification of compliance to quality requirements for the fabrication of HEMYC Protective Wrap System components.

3.0 REFERENCES

3.1 10CFR50, Appendix R

3.2 ANI Bulletin No. 5(79)

3.3 CTP-1026, HEMYC Fire Qualification Test

3.4 ANI Acceptance dated 08/02/82

3.5 IP-8400.101, Installation of HEMYC Protective Wrap System - Straight Sections

3.6 IP-8400.102, Installation of HEMYC Protective Wrap System - Curved Sections of Cable Tray

3.7 IP-8400.103, Installation of HEMYC Protective Wrap System onto Single or Multiple Conduits

3.8 IP-8400.104, Repair and Installation of the HEMYC Protective Wrap System Around Interferences and Obstructions.

3.9 IP-8400.105, Manufacture of HEMYC Cable Protection System Components

3.10 IP-8400.106, Installation of Firestops and Terminations within the HEMYC Protective Wrap System for Cable Tray(s) and Conduit(s)

3.11 IP-8400.107, Installation of HEMYC Protective Wrap System - Multiple Cable Trays

ISSUE DESIGNATION IN THIS COLUI ...DICATES CURRENT CHANGE

4.0 DEFINITIONS

None

5.0 RESPONSIBILITIES

5.1 The Installer's QUALITY CONTROL PERSONNEL, as trained and certified by PROMATEC, shall be responsible for appropriate inspection, documentation and monitoring activities.

5.2 The DOCUMENT CONTROL COORDINATOR shall be responsible to implement and maintain an adequate filing system of the documentation herein prescribed.

6.0 PROCEDURE

Inspection and acceptance criteria of the framework installation for cable tray and conduit assemblies. The assigned Quality Control Inspector shall inspect the installed framework for compliance to requirements established in the applicable PROMATEC procedures and as defined herein.

6.1 **QUALITY CONTROL HOLD POINT NO. ONE**

6.1.1 Verify that clamping devices are adequate for the specific type and size of cable tray.

6.1.2 Clamps must be used in sets. All clamps in a single set must be either all locking type or all friction type. NO INTERMIXING of types in a single set is acceptable (Refer to Figure 1 and 2).

6.1.3 Locking type clamps must be utilized at least every seventh clamp set.

6.1.4 Clamp sets are located on approximate eighteen (18") inch centers.

6.1.5 Locknuts shall be securely tightened to secure frame to cable tray. Locknuts shall only be used once.

6.1.6 Verify that a minimum of two (2") inch Dead Air Space is maintained between side, bottom and top of cable tray and outside of frame on all configurations, unless approved by FCR. (See Figure 3.)

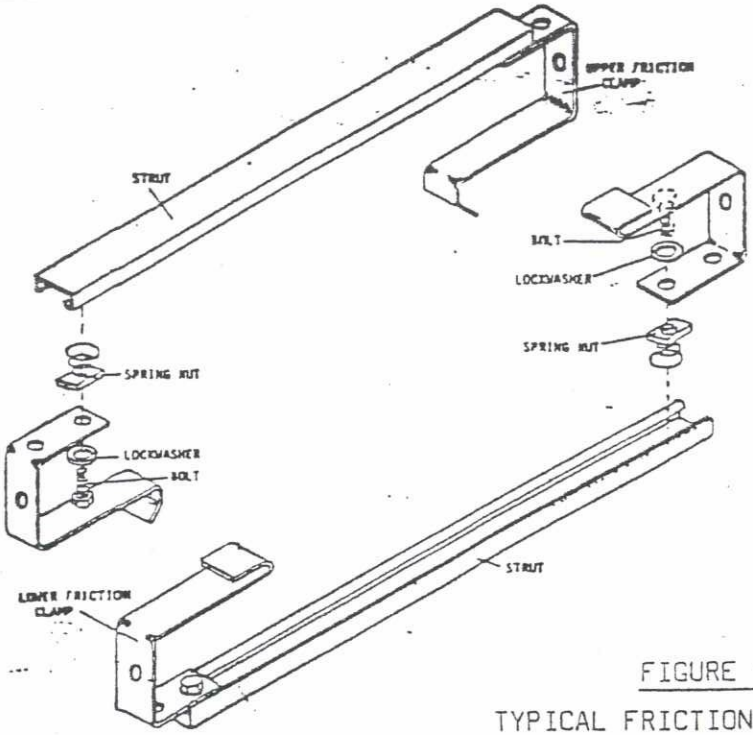

FIGURE 1

TYPICAL FRICTION CLAMP AND TYPICAL INSTALLATION

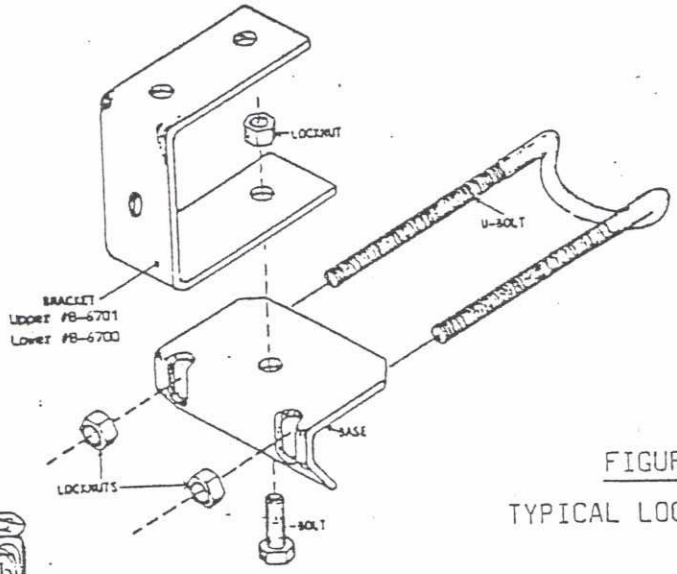

FIGURE 2

TYPICAL LOCKING CLAMP

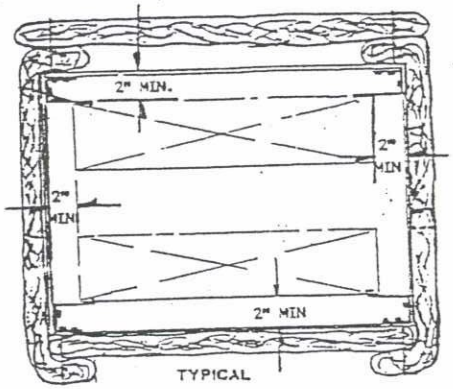

FIGURE 3

2" DEAD AIR SPACE
Single and Multiple Tray Configurations

ISSUE DESIGNATION IN THIS COLU NDICATES CURRENT CHANGE

6.1.7 Verify that top and bottom rails have blanket anchors spaced at a maximum nine (9") inch between centers throughout (Refer to Figure 4).

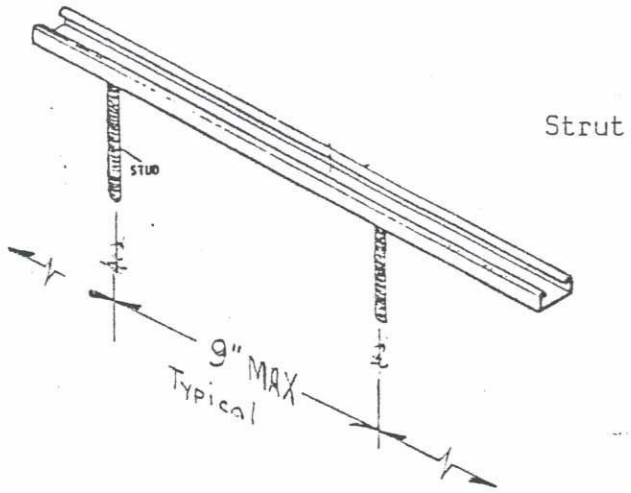

FIGURE 4
BLANKET ANCHOR SPACING

6.1.8 If concrete anchors are utilized to attach blankets to wall, ceiling or floor, they shall be a site-approved type. These anchors shall be spaced on a maximum nine (9") inch between centers throughout.

6.1.9 In the case of direct wrap on conduit, verify that finger strap is firmly attached to conduit per IP-8400.103 (if applicable).

6.1.10 Verify that frame is firmly attached to cable tray and that all nuts are securely tightened.

6.2 QUALITY CONTROL HOLD POINT NO. TWO

Inspection and acceptance criteria for installation of blanket wrap for single and multiple cable trays and conduits.

6.2.1 Assure that blanket to be installed is blanket number assigned for the designated section of cable tray or conduit.

6.2.2 Verify that a minimum of two (2") inches between center of anchors and edges of blanket on overlaps at top, bottom, and side of cable trays is maintained. (See Figure 5.)

6.2.3 Verify that either a eight (8") inch collar is on joints of conduit blanket wrap or that blanket wraps extend over adjoining blanket a minimum of four (4") inches. (See Figure 6.)

ISSUE DESIGNATION IN THIS COLUMN INDICATES CURRENT CHANGE
D

ISSUE DESIGNATION IN THIS COLUMN INDICATES CURRENT CHANGE
D

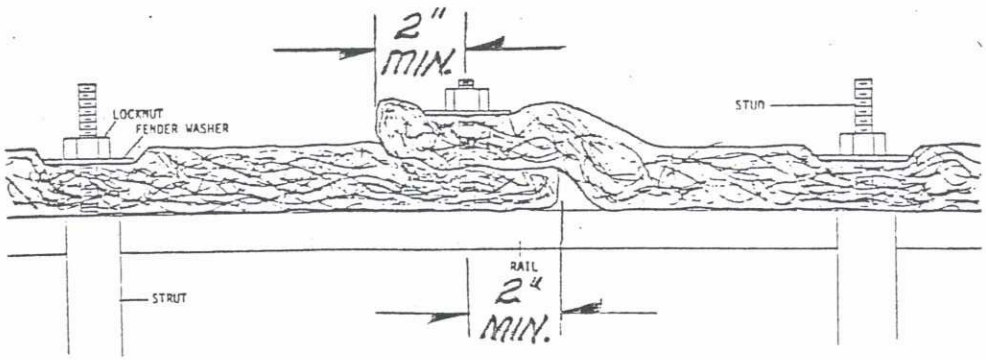

FIGURE 5

TYPICAL OVERLAP

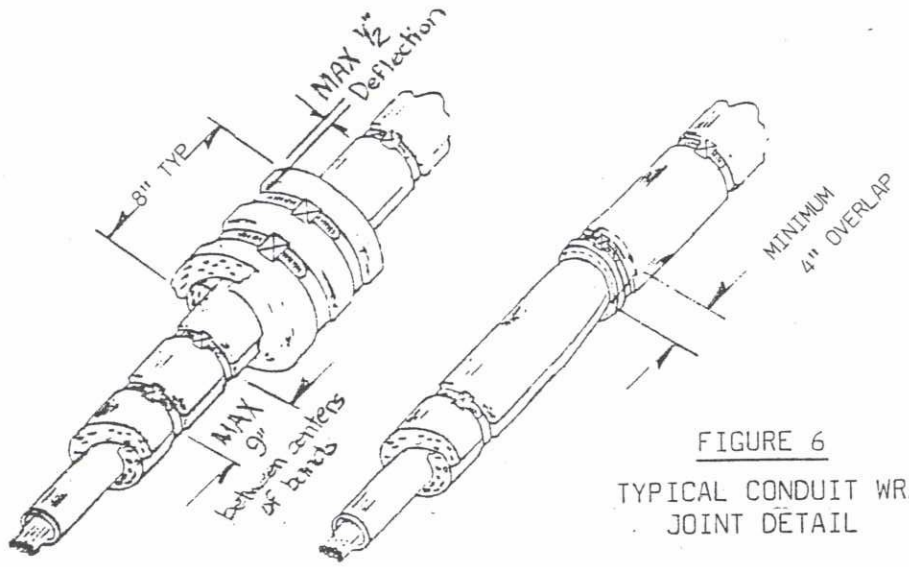

FIGURE 6

TYPICAL CONDUIT WRAP JOINT DETAIL

6.2.4 Verify that either stainless steel strapping or stainless steel band clamps are attached to blanket wrap on a maximum nine (9") inch center on conduit blanket wrap. If single conduit is attached to concrete surface, verify that concrete anchors are of site approved type. These anchors shall be spaced on a maximum of nine (9") inches between centers throughout. (See Figure No. 7.) Banding shall be a minimum gauge of .015 and a minimum width of one-half (1/2") inches.

ISSUE DESIGNATION IN THIS COLUMN INDICATES CURRENT CHANGE

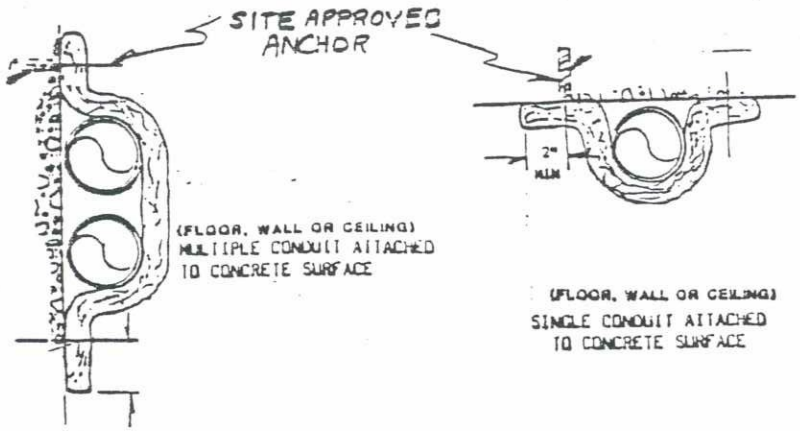

FIGURE 7

CONCRETE ATTACHMENT

6.2.5 Verify that termination of cable tray (floor, ceiling or wall) complies with IP-8400.106, Section 6.2. Check to assure that frame work stops within six (6") inches of surface and ensure that wraps are long enough to extend onto the surface. Wraps shall be attached to surface using the methods outlined in IP-8400.104, Section 6.3 (Refer to Figure 8).

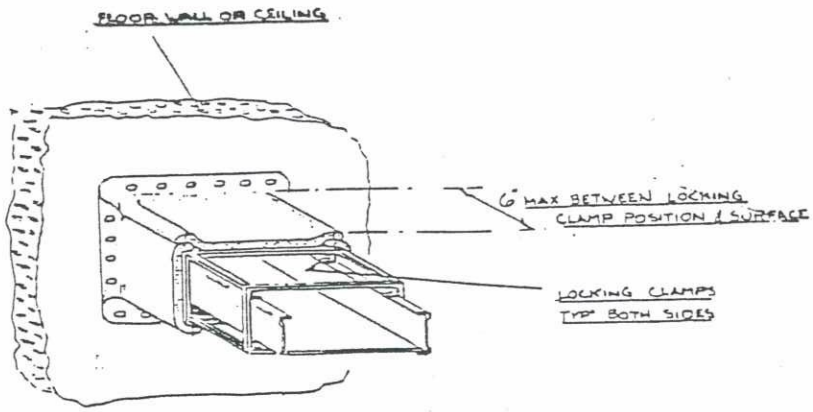

FIGURE 8

TYPICAL TERMINATION OF CABLE TRAY AT WALL, FLOOR OR CEILING

ISSUE DESIGNATION IN THIS COLUMN INDICATES CURRENT CHANGE

6.2.6 Verify that termination of conduit (floor, ceiling or wall) complies with IP-8400.106, Section 6.3. Assure that flange portion of termination collar is firmly attached onto concrete nuts and lock nuts are firmly tightened and that if gaps exist, they have plumbers tape or equivalent installed as outlined in IP-8400.104, Section 6.3.3 (Refer to Figure 9).

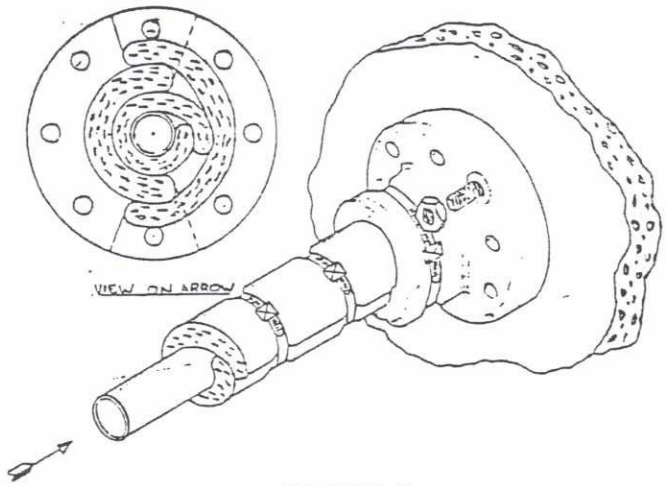

FIGURE 9

TYPICAL TERMINATION OF CONDUIT AT WALL, FLOOR OR CEILING

6.3 If fire stops are required on cable tray that ends with cable protruding, verify that firestops comply with IP-8400.106, Section 6.1.

6.3.1 Assure that a minimum of twelve (12") inch width layer of ceramic blanket is wrapped around bottom, sides and top of cable tray. Tray shall be filled with bulk fiber to that width. Two bands must be applied at four to six (4" - 6") inches apart and compressing both wraps and ceramic fiber filler. (See Figure 10 and 11.)

NOTE: Completed installation shall reflect a good workmanship product with tight folds and secured seams and bands.

ISSUE DESIGNATION IN THIS COLU NDICATES CURRENT CHANGE

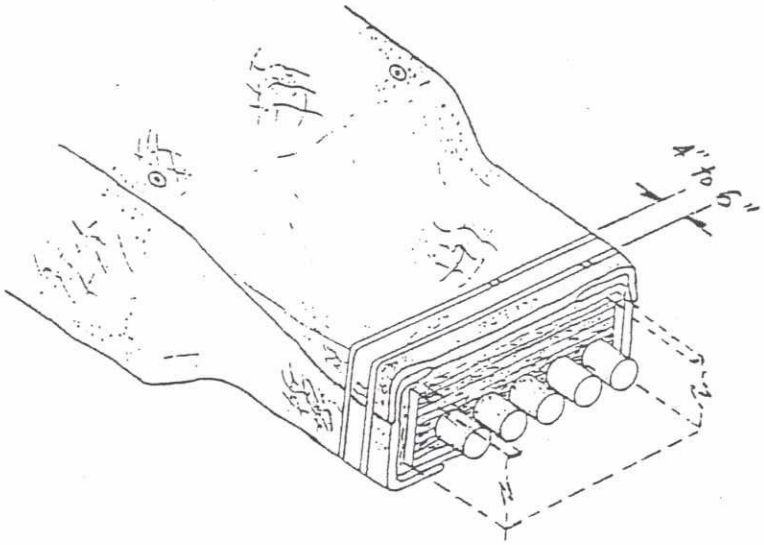

FIGURE 10

TYPICAL TERMINATION OF CABLE TRAY PROTECTIVE SYSTEM
NOT AT WALL, FLOOR OR CEILING (FIRESTOP)

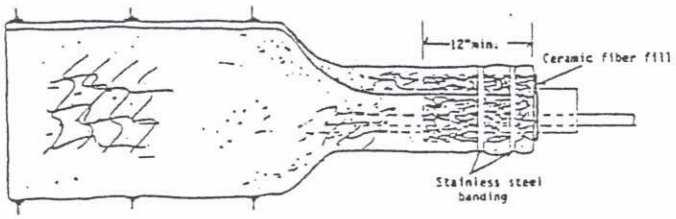

FIGURE 11

TYPICAL TERMINATION SHOWING CERAMIC BLANKET AND
BULK FIBER FILL. (FIRESTOP)

7.0 ATTACHMENTS

D 7.1 PROMATEC Form QC-62 with instructions.

7.2 ADDENDDUM I

HOLD POINT INSPECTION & CLIENT FINAL SIGNOFF REPORT

(QCP-10003)

PROJECT NAME: 2

PROJECT NUMBER: 3

REPORT NO. 1

STRUCTURAL INSPECTION

IDENTIFICATION NUMBER CABLE TRAY/CONDUIT	LOCATION - AREA/ELEVATION/ROOM ETC.	QC HOLD POINTS - STRUCTURAL INTEGRITY						VISUAL INSPECTION & RELEASE			
		1 DEAD AIR SPACE-2"	2 CLAMP DEVICES	3 FRAME SECURE	4 BLANKET ANCHORS	5 CONCRETE ANCHORS	6 OTHER --------	PASS	REJECT	DATE	BY
4	5	6	7	8	9	10	11	12	13	14	15

WRAP INSTALLATION INSPECTION & ACCEPTANCE

BLANKET NO./FAB ORDER NO.									QC HOLD POINTS - WRAP INSTALLATION				QC HOLD POINT 6 & FINAL ACCEPTANCE				
COND.	CABLE TRAY(S)								1 OVERLAPS 4" MIN	2 WRAP RETAINE INTACT	3 BANDING DEFLECT	4 TERMINATION ADEQUATE	VISUAL INSPECTION			FINAL ACCEPTANCE	
	TOP	BOT.	SIDE	SIDE	SIDE	SIDE	SIDE	SIDE					ACCEPT	HOLD	REJECT	DATE	BY
16	17	18	19		21		23		25	26	27	28	29	30	31	32	33

FORM QC-82/REV. 1 07-20-95

QCP-10003
ATTACHMENT 7.1

HOLD POINT INSPECTION
AND
FINAL SIGNOFF REPORT

1.	Report Number -	This is a two part number utilizing the numerical portion of the project number and the numerical sequence of the individual report sheet, i.e., 274/04 (This defines the fourth QC-62 used on Project FS-274).
2.	Project Name -	Name of project or plant.
3.	Project Number -	The PROMATEC assigned job number, i.e., FS-274.
4.	Identification Number Cable Tray/Conduit -	Cable tray identification number and conduit identification number obtained from customer supplied information.
5.	Location/Area/Elevation/ Room/etc. -	Location of Area, Elevation, Room, etc., obtained from customer supplied information.
6.	Dead Air Space - 2" -	Verify that a minimum of two (2") inch Dead Air space is maintained between side, bottom and top of cable tray and outside of frame on all configurations per QCP-10003, page 3, Section 6.1.
7.	Clamp Devices -	Verify that clamps are in sets. Clamps in a single set must be either locking type or all friction type. No intermixing of types in a single set is acceptable per QCP-10003, page 3, Section 6.1.2, Figures 1 & 2. If acceptable, designate with a check mark.
8.	Frame Secure -	Verify that frame is firmly attached to cable tray and that all nuts are securely tightened. If acceptable designate with a check mark.
9.	Blanket Anchors -	Verify that top and bottom rails have blanket anchors spaced on a maximum nine (9") inches between centers throughout, per QCP-10003, page 5, Section 6.1.7, Figure 4.
10.	Concrete Anchors -	Verify that concrete anchors are site approved, maximum spacing of nine (9") inches between centers allowed. If acceptable designate with a check mark.

11.	Other -	Mark N/A. This space is for other Hold Points, as required.
12.	Pass -	If frame is secured to frame, all nuts firmly tightened, and visual inspection verifies that frame work is structurally sound, designate by check mark.
13.	Reject -	If above is rejected designate by check mark.
14.	Date -	Date of visual inspection and release.
15.	By -	Name of inspector performing inspection.

BLANKET NO./FAB ORDER NUMBER FOR CABLE TRAY(S)

16.	Conduit -	Number of conduit assigned by customer supplied information. Refer to Number (4) identification of cable tray or conduit above. If cable tray number, mark N/A.
17.	Top -	Identification of blanket number and fab order number for top section.
18.	Bottom (Bot.) -	Identification of blanket number and fab order number for bottom section.
19 thru 24 (Side) -		Identification of blanket number and fab order number of required side sections. If side sections identification is not required, mark N/A.

QC HOLD POINTS & FINAL ACCEPTANCE

25.	Overlaps -	Overlaps four (4") inches minimum, verify that top, bottom, and side sections overlap each other by at least four (4") inches minimum. If accepted, designate by check mark.
26.	Retainer Intact -	Verify that Retainers are tight and secure, nuts, lock nuts, finger strap clips, etc. If accepted, designate by check mark.
27.	Banding Spacing Deflection -	Verify that the maximum deflection of the banding into the blanket is a maximum of one-half (1/2") inches. If so, designate by check mark.
28.	Termination Adequate -	Verify that the termination of the cable tray (floor, ceiling, or wall) complies with Procedure No. 8400.106, Section 6.2. Verify also that all nuts are securely tightened. If so, designate by a check mark.
29.	Accept Visual Inspection -	Insert check mark upon acceptance of completed blanket assembly.

30.	Hold -	Insert check mark if blanket assembly is incomplete or repairs are needed. Indicate appropriate action on a separate page if necessary.
31.	Reject -	Insert check mark if blanket assembly is rejected. Initiate appropriate action.
32.	Date -	Date inspection was performed.
33.	By -	Name of inspector performing inspection.

ISSUE DESIGNATION IN THIS COLL INDICATES CURRENT CHANGE

ADDENDUM

TO QCP-10003

ROCHESTER GAS & ELECTRIC

SITE SPECIFIC - GINNA STATION

PART A - Figure 6 / Typical Conduit Wrap Joint Detail

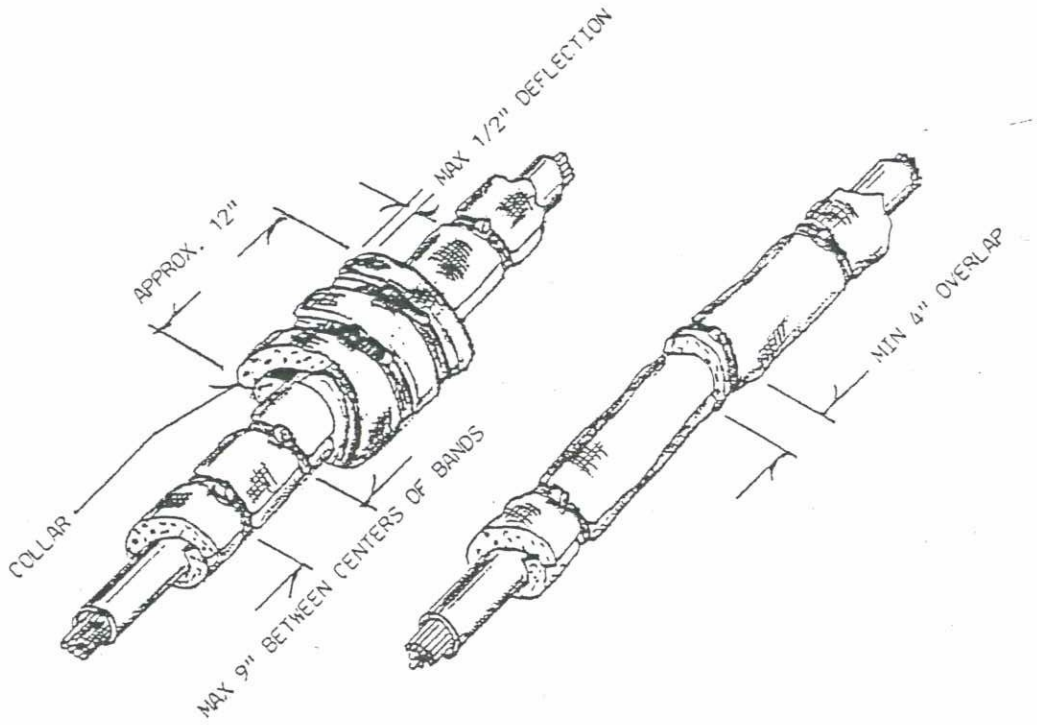

PART B - Figure 12 & Figure 13

Rochester Gas & Electric Note: Due to a pipe interference over Tray 111 the two (2") inch dead air space may be reduced as needed as shown on Figure 12 and 13 below.

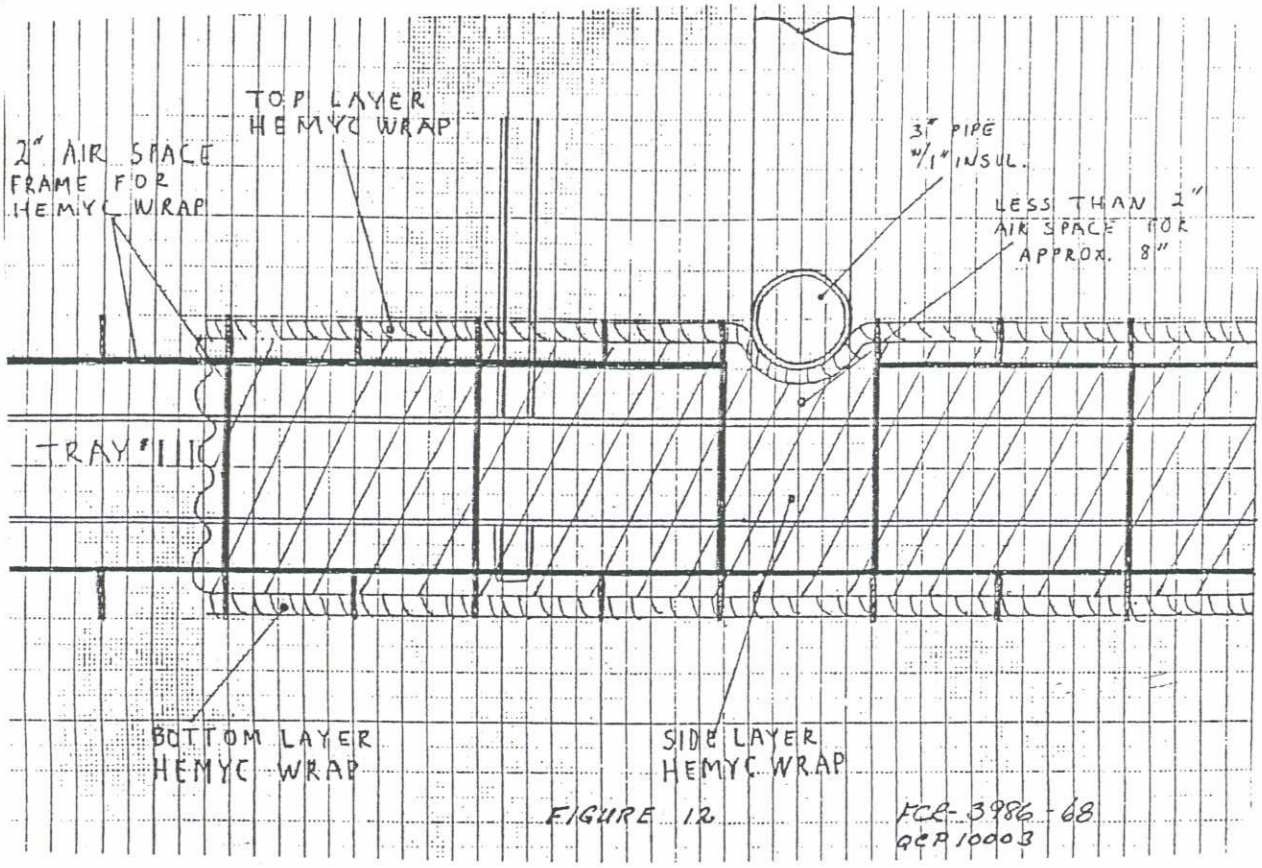

FIGURE 12

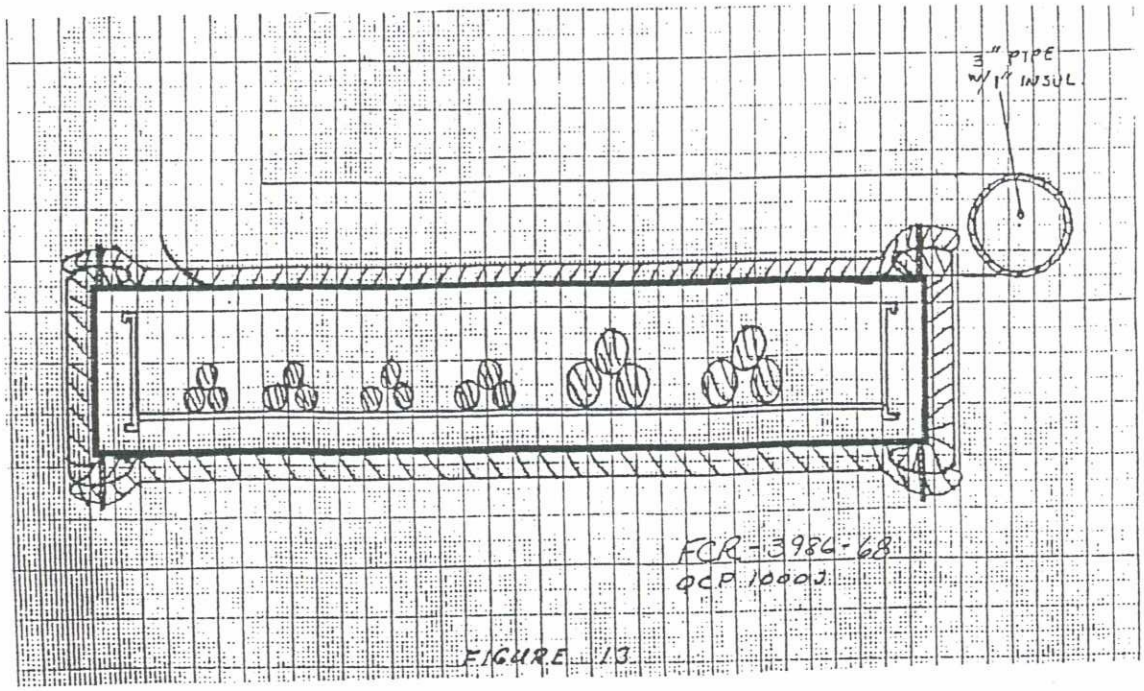

FIGURE 13

ISSUE DESIGNATION IN THIS COLL. INDICATES CURRENT CHANGE

ISSUE DESIGNATION IN THIS COL INDICATES CURRENT CHANGE

FABRICATION INSPECTION OF THREE HOUR PROTECTIVE WRAP COMPONENTS

1.0 PURPOSE

1.1 To establish inspection methods and acceptance criteria to assure three hour protective wrap systems are fabricated in accordance with established fabrication procedures.

2.0 SCOPE

2.1 Provide methods for the inspection of protective wrap components during fabrication to verify correct materials are utilized.

2.2 Provide methods for the inspection of protective wrap componets during fabrication to verify conformance to fabrication procedures.

2.3 Provide methods for the final inspection of completed protective wrap components to verify conformance to design requirements.

2.4 Establish requirements for recording inspection activities to provide documentary evidence of proper fabrication.

3.0 REFERENCES

3.1 Procedure No. IP-002, Fabrication Procedure for Three Hour Fire Protective components.

4.0 DEFINITIONS

4.1 Approved Materials -- Materials qualified for use as protective wrap components and issued for fabrication under controlled conditions.

4.2 Hold Point -- Critical steps in the fabrication process that require Quality Control inspection and acceptance prior to proceeding.

4.3 Check Point -- Random sample inspection of fabrication process performed at the descretion of Quality Control. Notification is not required.

4.4 Hot Side -- Outer surface of wrap design.

4.5 Cold Side -- Inner surface of wrap design.

4.6 In-Process Inspection -- Hold Point I and II.

4.7 Final Inspection -- Hold Point III.

ISSUE DESIGNATION IN THIS COL INDICATES CURRENT CHANGE

5.0 RESPONSIBILITIES

5.1 The Quality Assurance Manager or Designee shall be responsible for the development and proper implementation of this procedure.

5.2 The assigned Quality Control Inspector shall be responsible for performing activities established in this procedure.

6.0 PROCEDURE

6.1 Inspection instruments required to perform the activities described in this procedure include a measuring tape. Calibrated instruments are not required.

6.2 Inspection activities (Hold Point I, Hold Point II, Hold Point III) required by this procedure shall be documented on Form QC-61 (Fabrication Inspection Register).

6.3 Approved material traceability identification shall be documented on Form QC-60 (Traceability ID Register).

6.4 Non-conforming conditions identified in paragraph 6.8 shall be documented on Form QC-16 (Nonconformance Report) and dispositioned in accordance with QCP-0018.

6.5 Inspection activities described herein are mandatory hold points. Release for work to proceed shall be given by the assigned Quality Control Inspector upon satisfactory completion of all inspection activities required for each hold point.

6.6 Check point inspections may be performed at any time at the discreation of Quality Control. Such inspections are not mandatory and need not be documented unless discrepancies are identified.

6.7 Discrepancies identified during in process inspection that can be corrected within a (24) twenty four hour period in accorance with Procedure No. IP-002 may be accomplished without generating a non conformance report.

6.8 Non conformance reports shall be generated when any of the following conditions exist.

6.8.1 Discrepancies identified during in-process inspection are not corrected in accordance with IP-002 within (24) twenty four hours.

6.8.2 Discrepancies identified during final inspection where dispositioning party plans to recommend use-as-is, repair or reject dispositions (as defined in QCP-0018).

6.8.3 Any failure to notify Quality Control for hold point inspection prior to proceeding or proceeding prior to acceptance by Quality Control of each inspection attribute required, including satisfactory completion of any discrepancies identified.

6.9 A fabrication order shall be initated and complete, for the exception of the final release signatures at the bottom of Form QC-59, prior to any fabrication.

6.10 Copies of Fabrication Procedure No. IP-002 shall be issued in conjunction with this procedure to each assigned Quality Control Inspector for use and reference.

6.11 Hold Point One -- Material inspection

6.11.1 Only approved materials as listed in IP-002 shall be utilized in the fabrication of three hour fire protective components.

6.11.2 Document individual blanket material traceability on Form QC-60. Document Hold Point I on Form QC-61 after completion of Form QC-60.

6.12 Hold Point Two -- Inspection of inner blanket.

6.12.1 Inspect alumina silicia fiber blanket for proper dimensions in accordance with fabrication order. Verify 6" min. shiplap with 1/2" ± 1/4" deep trim in ceramic fiber blanket.

6.12.2 Inspect fiberglass cloth for proper dimensions in accordance with fabrication order. Verify 3/8" min. tuck allowed for securing hog rings. Verify hog rings are spaced 1" max apart around edges of fiberglass cloth on hot side of envelope.

6.13 Hold Point Two -- Inspection of outer blanket.

6.13.1 The outer blanket consists of two sub-assemblies, enveloped into a silica dioxide cloth. The sub-assemblies consist of, powder envelope (honeycomb and/or straight tubes) and the alumina/silica fiber blanket.

6.13.2 Inspect honeycomb tube powder envelope coated fiberglass cloth for stitching spaced 7/8"±1/8" apart before powder fill. Verify two sides are stitched 1/2" min. from edge of cloth. Verify two adjacent sides are folded across grain of tube 1"±1/4" and double stitched. Verify 100% fill of powder in tubes. Verify overall dimensions are in accordance with fabrication order 3/4".

ISSUE DESIGNATION IN THIS CO INDICATES CURRENT CHANGE

ISSUE DESIGNATION IN THIS CO INDICATES CURRENT CHANGE

6.13.3 Inspect straight tube powder envelope coated fiberglass cloth for stitching spaced 1 5/8"±1/8" apart before powder fill. Verify two sides are stitch 1/2" min. from edge of cloth. Verify adjacent two sides are folded across grain of tubes 1"±1/4" and double stitched. Verify 100% fill of powder in tubes. Verify overall dimensions are in accordance with fabrication order 3/4".

6.13.4 Inspect alumina/silica fiber blanket for proper dimensions in accordance with fabrication order. Inspect siltemp for proper dimensions in accordance with fabrication order. Verify siltemp envelope and sub-assemblies (powder envelope and alumina/silica fiber blanket) are placed in proper order and are arranged to allow for min. 6" ship lap design in accordance with fabrication order. Verify siltemp has 3/8" min. tuck for securing hog rings. Verify hog rings are spaced 1" min. around edges of siltemp on cold side of envelope. Type Q-24 telfon coated nylon thread may be used in lieu of hog rings on outer blanket. Verify lacing hooks are placed on hot side 1 1/2" ± 1/4" from edge of all upper shiplap edges and are spaced on maximum of 6" centers. Verify lacing hooks are placed on hot side 7 1/2"±1/4" from edge of all inner ship lap edges and spaced on 6" centers.

6.13.5 Verify that inner and outer blankets are marked with appropriate blanket identification numbers from applicable fabrication order. These markings shall be in min. 3/4" lettering. Marking shall be made with waterproof paint and/or ink which will retain the marking, withstand weather deterioration other handling effects and shall not be deleterious to the fabrics. These markings shall be in close proximity of the edges of any (2) two adjacent sides on the hot side of blanket.

6.13.6 A maximum of two pieces of cermic fiber blanket utilized in one envelope are acceptable only with the use of ship lap design and darting with approved thread to avoid seperation.

6.13.7 A maximum of two pieces of siltemp utilized in one side of envelope are acceptable only with the use of splicing by double stitching. Verify first stitch is 1/2"± 1/4" from edges of siltemp and second stitch is 1/2" ±1/4" from first stitch.

6.14 Hold Point III - Final Inspection

6.14.1 Inspect completed three hour fire protective blankets for damage, proper dimensions and markings in accordance with fabrication order.

6.14.2 Verify Q.C. Forms 59, 60 and 61 are accurately completed.

INDICATES CURRENT CHANGE

ISSUE DESIGNATION IN THIS CO

7.0 ATTACHMENTS

7.1 Instructions for completion of tractability ID Register. (Form QC-60)

7.2 Form QC-60

7.3 Instruction for completion of Fabrication Inspection Register (Form QC-61)

7.4 Form QC-61

7.5 Instructions for completion of Fabrication Order (Form QC-59).

7.6 Form QC-59

ATTACHMENT 7.1
INSTRUCTIONS FOR COMPLETION OF TRACEABILITY ID REGISTER
FORM QC-60

Report Number	This is a two part number utilizing the numberical portion of the project number and the numerical sequence of the individual report sheet initiated in this project. (i.e. 027/011. This defines the eleventh QC-60 used on project number PMT-027).
Project Name	Name of the project or plant.
Project Number	The PROMATEC job number (i.e. PMT-027)
Fabricaator	Name of company fabricating.
MT Barrier Wrap Identification Number	Identification number assigned on fabrication order (form QC-119)
MFG	Name of appropriate material manufacturer.
Type	Name of appropriate material type/description
I.D. No.	Manufacturers ID/lot number (if applicable).
R.R.#	Promatecs' assigned receiving report number
Inspector By/date	Inspectors initials and date of inspection.

PROMATEC

PROGRESSIVE MATERIALS AND TECHNOLOGIES, INC.

REPORT NUMBER _____

PROJECT NAME _____

PROJECT NUMBER _____

TRACEABILITY ID REGISTER.

FABRICATOR _____

MT BARRIER WRAP	EXTERNAL FABRIC		INTERNAL FABRIC		FILLER MATERIAL		FILLER MATERIAL		THREAD		HARDWARE		INSPECTOR
MFG *	*		*		*		*		*		*	*	
TYPE *	*		*		*		*		*		*	*	
IDENTIFICATION NO:	ID NO.	R.R.#	ID NO.	R.R.#	ID NO.	R.R.#	ID NO.	R.R.#	ID NO.	R.R.#	R.R.#	R.R.#	BY / DATE

ATTACHMENT 7.3
INSTRUCTION FOR COMPLETION OF FABRICATION INSPECTION REGISTER
FORM QC-61

Report Number	This is a two part number utilizing the numberical portion of the project number and the numerical sequence of the individual report sheet initiated on this project (i.e. 027/011. This defines the eleventh QC-61 used on project number PMT-027.)
Project Name	Name of project or plant.
Project Number	The Promatec job number (i.e. PMT-027).
Fabricator	Name of company fabricating blanket.
MT Barrier Wrap Identification Number	Identification number assigned on fabrication order (form QC-119).
QC-60 Number	Report number of the QC-60, Traceability ID Register for reference to traceability.
Hold Point One	
Reject/Accept	Place check mark in appropriate column.
By	Inspectors initials.
Date	Date of inspection.
Hold Point Two	
Reject/Accept	Place check mark in appropriate column.
By	Inspectors initials.
Date	Date of inspection.
Hold Point Three	
Reject/Accept	Place check mark in appropriate column.
By	Inspectors initials.
Date	Date of inspection.

PROMATEC
PROGRESSIVE MATERIALS AND TECHNOLOGIES, INC.

REPORT NUMBER _____

PROJECT NAME _____

PROJECT NUMBER _____

FABRICATION INSPECTION REGISTER

FABRICATOR _____

MT BARRIER WRAP	FORM	HOLD POINT ONE				HOLD POINT TWO				HOLD POINT THREE			
COMPONENT / BLANKET	QC-60	MATERIAL INSPECTION				FABRICATION INSPECTION				FINAL INSPECTION			
IDENTIFICATION NUMBER	NUMBER	REJECT	ACCEPT	BY	DATE	REJECT	ACCEPT	BY	DATE	REJECT	ACCEPT	BY	DATE

ATTACHMENT 7.5
INSTRUCTIONS FOR COMPLETION OF FORM QC-59

PFO	Promatec fabriction order. Assigned by Corporate Q.A. document control. Prefix with numberic portion of job number. Second portion is numerical sequence on that job. (027/011 represents the eleventh PFO on job #027).
ENG. PORTION	To be completed by Promatec Field Engineers.
PROJECT NAME	Project name.
CUSTOMER	Client
CUSTOMER ORDER NO.	Client order number
JOB NO.	Promatec assigned job number
TYPE	Name of fire protective wrap
QUANTITY	Number of pieces
LENGTH	Dimension in inches
WIDTH	Dimension in inches
THICKNESS	Dimension in inches
TOTAL FT 2	Dimenision in feet
SCHEMATIC DRAWING REF.	
SCHEMATIC NO.	
ID NO.	Individual wrap I.D. No. Ordered by Corporate QA Document Control.
ORDERED BY	Eng. signature
DATE	Date ordered
SKETCH	Eng. to sketch wrap and assign dimension.
CERTIFICTE OF CONFORMANCE	To be completed by Fabricator.
PROMATEC QUALITY ASSURANCE ACCEPTANCE	Promatec Quality Control signature.

ATTACHMENT 7.6

PROMATEC

FABRICATION ORDER

PFO-

PROJECT NAME	CUSTOMER	CUSTOMER ORDER NO.	JOB NO.

TYPE _____ QUANTITY _____

LENGTH _____ WIDTH _____ THICKNESS _____ TOTAL FT^2 _____

SCHEMATIC DRAWING REF. _____ SCHEMATIC NO. _____

I.D. NO. _____

ORDERED BY _____ DATE _____

SKETCH

CERTIFICATE OF CONFORMANCE

We hereby certify that all items furnished were fabricated with materials provided by PROMATEC and conform to the requirements of Purchase Order No. _____.

Signature _____ Company _____ Date _____

PROMATEC QUALITY ASSURANCE ACCEPTANCE

Signature _____ Title _____ Date _____

Form QC-59
Rev. 1 - 10/16/85

ISSUE DESIGNATION IN THIS COLUMN INDICATES CURRENT CHANGE

INSTALLATION INSPECTION OF THREE HOUR PROTECTIVE FIRE WRAP SYSTEMS

1.0 PURPOSE

To establish inspection methods and acceptance criteria to assure three hour protective wrap systems are installed in accordance with established installation procedures.

2.1 SCOPE

2.1 To provide methods for the inspection of protective wrap components during installation to verify correct materials are issued.

2.2 To provide methods for in-process and final inspection of protective wrap systems to verify conformance to design requirements.

2.3 To establish requirements for recording inspection activities to provide documentary evidence proper installation.

3.0 REFERENCES

3.1 Procedure No. IP-001, Installation of Three Hour Fire Protective Wrap Systems

3.2 Typical Design Detail B-495 and B-496

3.3 Procedure No. QCP-0042, Fabrication Inspection of Three Hour Protective Wrap Components

4.0 DEFINITIONS

4.1 **APPROVED MATERIALS** - Materials qualified for use as protective wrap system components and issued for installation under controlled conditions.

4.2 **HOLD POINT** - Criteria steps in the installation process that require Quality Control inspection and acceptance prior to proceeding.

4.3 **CHECK POINT** - Random sample inspection of installation processes performed at the discretion of Quality Control. Notification is not required.

5.0 RESPONSIBILITIES

5.1 The Quality Assurance Manager or Designee shall be responsible for the development and proper implementation of this procedure.

5.2 The assigned Quality Control Inspector shall be responsible for performing activities established in this procedure.

5.3 The Construction Manager or Designee shall be responsible for assuring that craft personnel notify Quality Control for inspections as referenced in IP-001.

ISSUE DESIGNATION IN THIS COLU NDICATES CURRENT CHANGE

6.0 PROCEDURE

6.1 Inspection instruments required to perform the activities described in this procedure include a six (6") inch scale and a measuring tape. Calibrated instruments are not required.

D 6.2 Inspection activities required by this procedure shall be documented on Form No. QC-117 (Three Hour Fire Protective Wrap Inspection Report) or an approved QC checklist. Nonconforming conditions identified in accordance with paragraph 6.5 shall be documented on Form QC-16 (Nonconformance Report) and dispositioned in accordance with Procedure No. QCP-0018.

D 6.3 Inspection activities described herein are mandatory hold points. Release for work to proceed shall be given by the assigned Quality Control Inspector upon satisfactory completion of all inspection activities required for each hold point and sign-off of Form QC-117 or approved QC checklist.

6.4 Random sample check points may be performed at anytime at the discretion of Quality Control. Such inspections are not mandatory and need not be documented unless discrepancies are identified.

6.5 Minor deviations identified during in-process inspection may be corrected without the issuance of Nonconformance Reports provided corrective action is taken immediately and documented on Form QC- 117 or an approved QC checklist. Minor deviations that cannot be corrected immediately shall be documented on Form QC-121 and processed in accordance with Procedure No. QCP-0018.

6.6 Nonconforming conditions that could adversely affect product integrity shall be documented on Form No. QC-16 and processed in accordance with Procedure No. QCP-0018.

6.7 Copies of Installation Procedure No. IP-001 shall be issued in conjunction with this procedure to each assigned Quality Control Inspector for field use and reference.

6.8 Conduit, Cable Drop and Junction Box Wrap Inspection.

6.8.1 Hold Point One - Inner Blanket Inspection

6.8.1.1 For cable drops, verify that cables are bundled tightly with duct tape, cable tie wrap or other suitable means.

D 6.8.1.2 Upon completion of installation, verify that serial number for each blanket is clearly visible and record on Form QC-117 or approved QC checklist.

6.8.1.3 Visually examine each blanket for damage. Holes and tears exceeding one (1") inch shall be repaired in accordance with IP-001 and re-inspected per section 6.13 of this procedure.

6.8.1.4 Inspect shiplap joints on each blanket for tightness and verify that gaps, if any, do not exceed one-half (1/2") inch, including blanket to blanket joints.

6.8.1.5 Inspect duct tape and verify application at full circumference around each blanket with tape to tape adhesion

6.8.2 Hold Point Two - Foil Barrier Inspection

6.8.2.1 Upon completion of installation visually examine each foil barrier strip for damage. Cuts, tears and holes shall be repaired with additional strips of foil exceeding one (1") inch and re-inspected prior to installation of outer blankets.

6.8.2.2 Inspect each foil barrier strip for lengthwise application and verify a minimum six (6") inch overlap on ends and edges (two (2") inches for sharp curvatures).

6.8.2.3 Inspect tape for sufficient spacing to assure no excessive gaps exist in overlaps with particular emphasis on conduit curvatures.

6.8.3 Hold Point Three - Outer Blanket Inspection

D 6.8.3.1 Upon completion of installation, verify that serial number for each blanket is clearly visible and record on Form QC-117 or approved QC checklist.

6.8.3.2 Visually examine each blanket for damage. Holes and tears exceeding one (1") inch shall be repaired in accordance with IP-001 and re-inspected per section 6.13 of this procedure.

6.8.3.3 Inspect shiplap joints for tightness and proper alignment. Verify that gaps, if any, do not exceed one-half (1/2") inch. Inspect each lacing hook and verify 16 gauge stainelss steel tie wire is securely fastened between each adjacent hook.

6.8.4 Hold Point Four - Final Inspection

6.8.4.1 Perform final examination of completed system to assure correct installation in accordance with this section.

6.8.4.2 Verify that correct raceway identification tags are affixed at all entrance and exit points (walls, floors) and at origin and destination points on runs five (5') feet and longer or at the most visible location on runs less than five (5') feet.

6.9 Three sided wrap installation inspection

6.9.1 Hold Point One - Concrete Anchor Inspection

6.9.1.1 Upon completion of installation inspect anchors for compliance to site requirements.

6.9.1.2 Measure anchor spacing for maximum twelve (12") inch centers and verify that each anchor is pre-set.

6.9.2 Hold Point Two - Inner Blanket Inspection

ISSUE DESIGNATION IN THIS COLU NDICATES CURRENT CHANGE

6.9.2.1 Upon completion of installation inspect each blanket in accordance with subsection 6.8.1 of this procedure. Additionally:

6.9.2.2 Inspect each blanket and verify proper alignment following impalement through studs.

6.9.2.3 Measure from blanket edges of each inner blanket to center of corresponding studs and verify minimum two (2") extension.

6.9.3 Hold Point Three - Foil Barrier Inspection

6.9.3.1 Upon completion of installation inspect each foil barrier strip in accordance with subsection 6.8.2. Additionally:

6.9.3.2 Inspect each foil barrier strip and verify proper alignment following impalement through studs.

6.9.3.3 Measure from edges of foil barrier to center of studs on each barrier strip and verify minimum two (2") extension.

6.9.4 Hold Point Four - Outer Blanket Inspection

6.9.4.1 Upon completion of installation inspect each blanket in accordance with subsection 6.8.3 . Additionally:

6.9.4.2 Inspect blanket and verify proper alignment following impalement through studs.

6.9.4.3 Inspect anchor assembly and verify that fender washers and/or B72 studs and/or flat bars are in place and that locknuts (or double nuts) are securely tightened.

6.9.4.4 Visually examine blanket assembly for wrinkles and bunches, and verify that assembly is not depressed over three-fourth (3/4") inch at anchors.

6.9.5 Hold Point Five - Final Inspection

6.9.5.1 Perform final examination of completed system to assure correct installation in accordance with this section.

6.9.5.2 Verify that correct raceway identification tags are affixed at all entrance and exit points (walls, floors) and at origin and destination points on runs five (5') feet and longer or at the most visible location on runs less than five (5') feet.

6.10 Field Modification Inspection - Non-Electrical Interferences

6.10.1 Hold Point One - Fabrication Inspection

D 6.10.1.1 Upon issuance of alumina silica blankets and outer fabric for fabrication record lot number(s) and receiving report number(s) on Form No. QC-117 or approved QC checklist.

ISSUE DESIGNATION IN THIS COLL INDICATES CURRENT CHANGE

6.10.2 Hold Point Two - Installation Inspection

6.10.2.1 Upon completion of fabrication and installation, verify correct thickness based alumina silica blanket size issued (actual measurement is not required due to blanket compression factor). Measure for minimum distance of eighteen (18") inches from point of interference or full length if interference is less than eighteen (18") inches.

6.10.2.2 Inspect lacing hooks and tie wire fasteners for sufficient spacing and tightness (six (6") inch minimum spacing is not required for interferences).

6.10.2.3 Inspect blanket joint and seam, and verify that no apparent gaps exist.

6.11 Cable Tray Interference Installation Inspection

6.11.1 Hold Point - Cable Inspection

D 6.11.1.1 Upon issuance of alumina silica blankets, record lot number and receiving report number on Form QC-117 or approved QC checklist.

6.11.1.2 Upon completion of installation inspect alumina silica blanket and verify that distance from each side of protected conduit is a minimum of eighteen (18") inches.

6.11.2 Cable Tray Interference Wrap Inspection

6.11.2.1 Installation inspection of cable tray wrap systems shall be in accordance with section 6.8 of this procedure and design details as established by Engineering.

6.12 Inspection of Field Fabrication Components

6.12.1 Primary wrap components fabricated in the field shall be inspected and documented in accordance with QCP-0042 prior to installation.

D 6.12.2 Field fabrication of items used for modification of existing wrap components shall be inspected in accordance with the applicable sections of QCP-0042. Inspection results and material traceability shall be recorded on Form QC-117 (or approved QC checklist) in lieu of Form QC-60 and QC-61.

6.13 Field Repair Inspection

D 6.13.1 Record lot numbers and receiving report numbers for materials issued for use on Form No. QC-117 or approved QC checklist.

6.13.2 Upon completion of installation inspect for tightness and verify that patch overlaps a minimum of two (2") inches on undamaged fabric, and that patches have finished edges.

ISSUE DESIGNATION IN THIS COLL NDICATES CURRENT CHANGE

6.13.3 Inspect Q-24 thread stitching on patches and tears two (2") inches and under and verify minimum spacing of one-half (1/2") inch.

6.14 When the alternate method for installing outer blanket assemblies is utilized as described in subsection 6.6 of IP-001, the following Inspection Hold Point shall apply in lieu of subsection 6.8.3 and 6.8.4.

6.14.1 Hold Point Three - Tube Assembly Inspection

D 6.14.1.1 Upon completion of tube assembly installation, verify that serial numbers are clearly visible and record on Form QC-117 or approved QC checklist.

6.14.1.2 Visually examine each component for damage and verify that tubes are parallel with system run. Holes and tears shall be patches with aluminum or duct tape to prevent powder leakage. If holes and tears result in excessive powder loss, the affected component shall be replaced.

6.14.1.3 Inspect circumferential and longitudinal joints and verify abutting fit with no apparent gaps. Inspect duct tape for sufficient spacing and tape to tape adhesion.

6.14.2 Hold Point Four - Alumina Silica Blanket Inspection

D 6.14.2.1 Upon completion of installation of each alumina silica blanket, verify that serial number is clearly visible and record on Form QC-117 or an approved QC checklist.

6.14.2.2 Visually examine each blanket for damage. Holes or tears in fabric exceeding one (1") inch shall be repaired per IP-001 and inspected per section 6.13 of this procedure.

6.14.2.3 Verify that circumferential and longitudinal joints are staggered a minimum six (6") inches from tube assembly joints.

6.14.2.4 Inspect longitudinal and circumferential joints for tightness with no apparent gaps. Verify that 16 gauge stainless steel tie wire is securely fastened between adjacent lacing hooks.

6.14.3 Hold Point Five - Final Inspection

6.14.3.1 Upon completion of total system installation perform final visual inspection of system to assure compliance with all applicable requirements.

6.14.3.2 Verify that correct raceway identification tags are affixed in accordance with paragraph 6.8.4.2.

7.0 ATTACHMENTS

7.1 Form No. QC-117, Three Hour Protective Wrap Inspection Report

7.2 Form No. QC-122, Three Hour MT Barrier Installation Inspection Report Register

ISSUE DESIGNATION IN THIS COLL INDICATES CURRENT CHANGE

F. MATEC

INSTALLATION INSPECTI(.EPORT
THREE HOUR MT BARRIER

Page 1 of ____

Report .: /

Project Name:	Job No.:	Raceway I.D. No.:	Schematic No.:	System Description:	Area:	Elevation:

Component Identification Number	Type	Hold Point No.	Tags/ Marking		Visual		Shiplap Overlap		Seam/ Joint		Duct Tape		Stagger		Lacing Hooks		Tie Wire		Anchors		Bolting		Cable-Blanket Bundle		Length/ Thick-ness		Repair/ Modif.		Insp. Initial	Insp. Date
			A	U	A	U	A	U	A	U	A	U	A	U	A	U	A	U	A	U	A	U	A	U	A	U	A	U		

SUPPLEMENTAL MATERIALS TRACEABILITY

TYPE	LOT NO.	APPLICATION	TYPE	LOT NO.	APPLICATION

REMARKS:

Final Acceptance:	Date:	Client Acceptance:	Date:

FORM QC-117

3 HR MT BARRIER
INSTALLATION INSPECTION REPORT REGISTER

PROJECT NAME: _____

PROJECT NO.: _____

REPORT NUMBER	RACEWAY I.D. NO.	SCHEMATIC NUMBER	SYSTEM DESCRIPTION	RELEASE DATE	ACCEPTANCE DATE	COMMENTS

FORM QC-122 REV. 1-07/20/95

PROMATEC

FABRICATION ORDER

PFO-

PROJECT NAME	CUSTOMER	CUSTOMER ORDER NO.	NO.

TYPE _____ QUANTITY _____

LENGTH _____ WIDTH _____ THICKNESS _____ TOTAL FT² _____

SCHEMATIC DRAWING REF. _____ SCHEMATIC NO. _____

I.D. NO. _____

ORDERED BY _____ DATE _____

SKETCH

CERTIFICATE OF CONFORMANCE

We hereby certify that all items furnished were fabricated with materials provided by PROMATEC and conform to the requirements of Purchase Order No. _____.

Signature _____ Company _____ Date _____

PROMATEC QUALITY ASSURANCE ACCEPTANCE

Signature _____ Title _____ Date _____

Form QC-59
Rev. 1 - 10/16/85

(QC 002)

PROJECT NAME _____

PROJECT NUMBER _____

FABRICATOR _____

FABRICATOR ADDRESS _____

REPORT NUMBER ____/____

TRACEABILITY ID REGISTER

CABLE WRAP FABRICATION

FORM QC-60

03/01/83

REV. 1 - 11/20/84

REV. 2 - 03/04/85

BLANKET NUMBER/ FAB ORDER NUMBER	EXTERNAL FABRIC MFG: ____ TYPE: ____ MFG. ID NO:	INTERNAL FABRIC MFG: ____ TYPE: ____ MFG. ID NO:	FILLER MATERIAL MFG: ____ TYPE: ____ MFG. ID NO:	THREAD 1 MFG: ____ TYPE: ____ MFG. ID NO:	COMMENTS	DATE	BY

Appendix F

QA DOCUMENTATION FOR HEMYC INSTALLATION

Q/A RECEIVING REPORT

CLIENT/PROJECT NAME Sandia Nat'l Labs
LIENT/PROJECT NUMBER 14790-123265
RECEIVED FROM Promatec
PROJECT LOCATION Omega Point Labs

REPORT NUMBER 2703 -14790
DATE RECEIVED 4-11-05
DATE INSPECTED 4-11-05
INSPECTED BY: [illegible]

ITEM DESCRIPTION	P.O . NO.	QUANTITY			I.D. NO.	CON'tD MATL Y/N	CERT REC'D Y/N	SAFETY RELATED Y/N	CONTAINER INTEGRITY	ACCEPTANCE			REMARKS
		Order	Rec'd	B.O.						Accept	Hold	Reject	
Hemyc Test #3	NA	0	various		See attached sheets	Y	Y	N	Good	X			Receiving verification only

09-016-11/02

PCI PERFORMANCE CONTRACTING INC PROMATEC

FABRICATION ORDER

PFO - 051179

PROJECT NAME	CUSTOMER	CUSTOMER ORDER NO.	JOB NO.
HEMYC TEST #3	SANDIA LAB	401177 Rev. 1	1039

TYPE THREE HOUR / INNER LAYER QUANTITY _____

LENGTH SEE DRAWING WIDTH SEE DRAWING THICKNESS 1" TOTAL FT ² _____

SCHEMATIC DRAWING REF. SEE BELOW SCHEMATIC NO. N/A

I.D. NO. 4" CONDUIT # 3A

ORDERED BY MICHAEL JORDAN DATE 3/31/05

SKETCH

SEE ATTACHED SEGMENT DRAWINGS

3A-1
3A-2
3A-3
3A-4
3A-5
3A-6
3A-7

CERTIFICATE OF CONFORMANCE

We hereby certify that all items furnished were fabricated with materials provided by PCI-Promatec and conform to the requirements of Purchase Order No. 051179.

Signature [illegible] Company M.I.T. Int'l Date 4/21/05

PCI-PROMATEC QUALITY ASSURANCE ACCEPTANCE

Signature Mike Jordan Title FSM Date 4-21-05

Form QC-59
Rev. 2 – 02/18/05

PCI PERFORMANCE CONTRACTING INC PROMATEC	FABRICATION ORDER	PFO - 051179 Page 469

PROJECT NAME	CUSTOMER	CUSTOMER ORDER NO.	JOB NO.
HEMYC TEST #3	SANDIA LAB	401177 Rev. 1	1039

TYPE THREE HOUR / INNER LAYER QUANTITY _____

LENGTH SEE DRAWING WIDTH SEE DRAWING THICKNESS 1" TOTAL FT ² _____

SCHEMATIC DRAWING REF. SEE BELOW SCHEMATIC NO. N/A

I.D. NO. 4" CONDUIT # 3B

ORDERED BY MICHAEL JORDAN DATE 3/31/05

SKETCH

SEE ATTACHED SEGMENT DRAWINGS

3B-1
3B-2
3B-3
3B-4
3B-5
3B-6
3B-7

CERTIFICATE OF CONFORMANCE

We hereby certify that all items furnished were fabricated with materials provided by PCI-Promatec and conform to the requirements of Purchase Order No. 051179.

Signature [illegible] Company M.I.T. Int'l Date 4/21/05

PCI-PROMATEC QUALITY ASSURANCE ACCEPTANCE

Signature Michael Jordan Title FSM Date 4-21-05

Form QC-59
Rev. 2 – 02/18/05

PCI PERFORMANCE CONTRACTING INC PROMATEC

FABRICATION ORDER

PFO - 051179

PROJECT NAME	CUSTOMER	CUSTOMER ORDER NO.	JOB NO.
HEMYC TEST #3	SANDIA LAB	401177 Rev. 1	1039

TYPE THREE HOUR / INNER LAYER QUANTITY _____

LENGTH SEE DRAWING WIDTH SEE DRAWING THICKNESS 1" TOTAL FT ² _____

SCHEMATIC DRAWING REF. SEE BELOW SCHEMATIC NO. N/A

I.D. NO. 2 1/2" CONDUIT # 3C

ORDERED BY MICHAEL JORDAN DATE 3/31/05

SKETCH

SEE ATTACHED SEGMENT DRAWINGS

3C-1
3C-2
3C-3
3C-4
3C-5

CERTIFICATE OF CONFORMANCE

We hereby certify that all items furnished were fabricated with materials provided by PCI-Promatec and conform to the requirements of Purchase Order No. 051179.

Signature [illegible] Company M.I.T. Int'l Date 4/21/05

PCI-PROMATEC QUALITY ASSURANCE ACCEPTANCE

Signature Mike Jordan Title FSM Date 4-21-05

Form QC-59
Rev. 2 – 02/18/05

PERFORMANCE CONTRACTING INC PROMATEC

FABRICATION ORDER

PFO - 051179

PROJECT NAME	CUSTOMER	CUSTOMER ORDER NO.	JOB NO.
HEMYC TEST #3	SANDIA LAB	401177 Rev. 1	1039

TYPE THREE HOUR / INNER LAYER QUANTITY _____

LENGTH SEE DRAWING WIDTH SEE DRAWING THICKNESS 1" TOTAL FT ² _____

SCHEMATIC DRAWING REF. SEE BELOW SCHEMATIC NO. N/A

I.D. NO. 2 1/2" CONDUIT # 3D

ORDERED BY MICHAEL JORDAN DATE 3/31/05

SKETCH

SEE ATTACHED SEGMENT DRAWINGS

3D-1
3D-2
3D-3
3D-4
3D-5

CERTIFICATE OF CONFORMANCE

We hereby certify that all items furnished were fabricated with materials provided by PCI-Promatec and conform to the requirements of Purchase Order No. 051179.

Signature [signature] Company M.I.T. Intl Date 4/21/05

PCI-PROMATEC QUALITY ASSURANCE ACCEPTANCE

Signature [signature] Title FSM 4-21-05 Date 4-21-05

Form QC-59
Rev. 2 – 02/18/05

PCI PERFORMANCE CONTRACTING INC PROMATEC

FABRICATION ORDER

PFO - 051179

PROJECT NAME	CUSTOMER	CUSTOMER ORDER NO.	JOB NO.
HEMYC TEST #3	SANDIA LAB	401177 Rev. 1	1039

TYPE THREE HOUR / INNER LAYER QUANTITY _____

LENGTH SEE DRAWING WIDTH SEE DRAWING THICKNESS 1" TOTAL FT ² _____

SCHEMATIC DRAWING REF. SEE BELOW SCHEMATIC NO. N/A

I.D. NO. 1" CONDUIT # 3E

ORDERED BY MICHAEL JORDAN DATE 3/31/05

SKETCH

SEE ATTACHED SEGMENT DRAWINGS

3E-1
3E-2
3E-3
3E-4
3E-5

CERTIFICATE OF CONFORMANCE

We hereby certify that all items furnished were fabricated with materials provided by PCI-Promatec and conform to the requirements of Purchase Order No. 051179.

Signature [signature] Company M.I.T. Int'l Date 4/21/05

PCI-PROMATEC QUALITY ASSURANCE ACCEPTANCE

Signature [signature] Title FSR Date 4-21-05

Form QC-59
Rev. 2 – 02/18/05

PCI PERFORMANCE CONTRACTING INC PROMATEC	FABRICATION ORDER	PFO - 051179 Page 473

PROJECT NAME	CUSTOMER	CUSTOMER ORDER NO.	JOB NO.
HEMYC TEST #3	SANDIA LAB	401177 Rev. 1	1039

TYPE THREE HOUR / INNER LAYER QUANTITY _____

LENGTH SEE DRAWING WIDTH SEE DRAWING THICKNESS 1" TOTAL FT ² _____

SCHEMATIC DRAWING REF. SEE BELOW SCHEMATIC NO. N/A

I.D. NO. 1" CONDUIT # 3F

ORDERED BY MICHAEL JORDAN DATE 3/31/05

SKETCH

SEE ATTACHED SEGMENT DRAWINGS

3F-1
3F-2
3F-3
3F-4
3F-5

CERTIFICATE OF CONFORMANCE

We hereby certify that all items furnished were fabricated with materials provided by PCI-Promatec and conform to the requirements of Purchase Order No. 051179.

Signature [illegible] Company M.I.T. Int'l Date 4/21/05

PCI-PROMATEC QUALITY ASSURANCE ACCEPTANCE

Signature [illegible] Title [illegible] Date 4-21-05

Form QC-59
Rev. 2 – 02/18/05

PCI PERFORMANCE CONTRACTING INC PROMATEC

FABRICATION ORDER

PFO - 051179

PROJECT NAME	CUSTOMER	CUSTOMER ORDER NO.	JOB NO.
HEMYC TEST #3	SANDIA LAB	401177 Rev. 1	1039

TYPE THREE HOUR / INNER LAYER QUANTITY _____

LENGTH SEE DRAWING WIDTH SEE DRAWING THICKNESS 1" TOTAL FT ² _____

SCHEMATIC DRAWING REF. SEE BELOW SCHEMATIC NO. N/A

I.D. NO. JUNCTION BOX # 3I

ORDERED BY MICHAEL JORDAN DATE 3/31/05

SKETCH

SEE ATTACHED SEGMENT DRAWINGS

3I-1
3I-2
3I-3

CERTIFICATE OF CONFORMANCE

We hereby certify that all items furnished were fabricated with materials provided by PCI-Promatec and conform to the requirements of Purchase Order No. 051179.

Signature [illegible] Company M.I.T. Int'l Date 4/21/05

PCI-PROMATEC QUALITY ASSURANCE ACCEPTANCE

Signature [illegible] Title FSM Date 4-21-05

Form QC-59
Rev. 2 – 02/18/05

PCI PERFORMANCE CONTRACTING INC PROMATEC

FABRICATION ORDER

PFO - 051179

PROJECT NAME	CUSTOMER	CUSTOMER ORDER NO.	JOB NO.
HEMYC TEST #3	SANDIA LAB	401177 Rev. 1	1039

TYPE THREE HOUR / INNER LAYER QUANTITY _____

LENGTH SEE DRAWING WIDTH SEE DRAWING THICKNESS 1 1/2" TOTAL FT ² _____

SCHEMATIC DRAWING REF. SEE BELOW SCHEMATIC NO. N/A

I.D. NO. CABLE DROP # 3J

ORDERED BY MICHAEL JORDAN DATE 3/31/05

SKETCH

SEE ATTACHED SEGMENT DRAWINGS

3J-1
3J-2
3J-3
3J-4
3J-5
3J-6
3J-7
3J-8
3J-9
3J-10
3J-11
3J-12

CERTIFICATE OF CONFORMANCE

We hereby certify that all items furnished were fabricated with materials provided by PCI-Promatec and conform to the requirements of Purchase Order No. 051179.

Signature [illegible] Company M.I.T. Int'l Date 4/21/05

PCI-PROMATEC QUALITY ASSURANCE ACCEPTANCE

Signature Michael Jordan Title FSM Date 4-21-05

Form QC-59
Rev. 2 – 02/18/05

PCI PERFORMANCE CONTRACTING INC PROMATEC	FABRICATION ORDER	PFO - 051179 Page 476

PROJECT NAME	CUSTOMER	CUSTOMER ORDER NO.	JOB NO.
HEMYC TEST #3	SANDIA LAB	401177 Rev. 1	1039

TYPE THREE HOUR / OUTER LAYER QUANTITY _____

LENGTH SEE DRAWING WIDTH SEE DRAWING THICKNESS 1 1/2" TOTAL FT ² _____

SCHEMATIC DRAWING REF. SEE BELOW SCHEMATIC NO. N/A

I.D. NO. 4" CONDUIT # 3A

ORDERED BY MICHAEL JORDAN DATE 3/31/05

SKETCH

SEE ATTACHED SEGMENT DRAWINGS

3A-8
3A-9
3A-10
3A-11
3A-12
3A-13
3A-14

CERTIFICATE OF CONFORMANCE

We hereby certify that all items furnished were fabricated with materials provided by PCI-Promatec and conform to the requirements of Purchase Order No. 051179.

Signature [illegible] Company M.I.T. Intl Date 4/21/05

PCI-PROMATEC QUALITY ASSURANCE ACCEPTANCE

Signature Michael Jordan Title FSM Date 4-21-05

Form QC-59
Rev. 2 – 02/18/05

PCI PERFORMANCE CONTRACTING INC PROMATEC	FABRICATION ORDER	PFO - 051179 Page 477

PROJECT NAME	CUSTOMER	CUSTOMER ORDER NO.	JOB NO.
HEMYC TEST #3	SANDIA LAB	401177 Rev. 1	1039

TYPE THREE HOUR / OUTER LAYER QUANTITY _____

LENGTH SEE DRAWING WIDTH SEE DRAWING THICKNESS 1 ½" TOTAL FT ² _____

SCHEMATIC DRAWING REF. SEE BELOW SCHEMATIC NO. N/A

I.D. NO. 4" CONDUIT # 3B

ORDERED BY MICHAEL JORDAN DATE 3/31/05

SKETCH

SEE ATTACHED SEGMENT DRAWINGS

3B-8
3B-9
3B-10
3B-11
3B-12
3B-13
3B-14

CERTIFICATE OF CONFORMANCE

We hereby certify that all items furnished were fabricated with materials provided by PCI-Promatec and conform to the requirements of Purchase Order No. 051179.

Signature [illegible] Company M.I.T. Int'l Date 4/21/05

PCI-PROMATEC QUALITY ASSURANCE ACCEPTANCE

Signature Mike or Jordan Title FSM Date 4-21-05

Form QC-59
Rev. 2 – 02/18/05

PCI PERFORMANCE CONTRACTING INC PROMATEC	FABRICATION ORDER	PFO - 051179 Page 478

PROJECT NAME	CUSTOMER	CUSTOMER ORDER NO.	JOB NO.
HEMYC TEST #3	SANDIA LAB	401177 Rev. 1	1039

TYPE THREE HOUR / OUTER LAYER QUANTITY _____

LENGTH SEE DRAWING WIDTH SEE DRAWING THICKNESS 1 1/2" TOTAL FT ² _____

SCHEMATIC DRAWING REF. SEE BELOW SCHEMATIC NO. N/A

I.D. NO. 2 1/2" CONDUIT # 3C

ORDERED BY MICHAEL JORDAN DATE 3/31/05

SKETCH

SEE ATTACHED SEGMENT DRAWINGS

3C-6
3C-7
3C-8
3C-9
3C-10

CERTIFICATE OF CONFORMANCE

We hereby certify that all items furnished were fabricated with materials provided by PCI-Promatec and conform to the requirements of Purchase Order No. 051179.

Signature [illegible] Company M.I.T. Int'l Date 4/21/05

PCI-PROMATEC QUALITY ASSURANCE ACCEPTANCE

Signature [illegible] Title FSM Date 4-21-05

Form QC-59
Rev. 2 – 02/18/05

PCI PERFORMANCE CONTRACTING INC PROMATEC	FABRICATION ORDER	PFO - 051179 Page 479

PROJECT NAME	CUSTOMER	CUSTOMER ORDER NO.	JOB NO.
HEMYC TEST #3	SANDIA LAB	401177 Rev. 1	1039

TYPE THREE HOUR / OUTER LAYER QUANTITY _____

LENGTH SEE DRAWING WIDTH SEE DRAWING THICKNESS 1 1/2" TOTAL FT ² _____

SCHEMATIC DRAWING REF. SEE BELOW SCHEMATIC NO. N/A

I.D. NO. 2 1/2" CONDUIT # 3D

ORDERED BY MICHAEL JORDAN DATE 3/31/05

SKETCH

SEE ATTACHED SEGMENT DRAWINGS

3D-6
3D-7
3D-8
3D-9
3D-10

CERTIFICATE OF CONFORMANCE

We hereby certify that all items furnished were fabricated with materials provided by PCI-Promatec and conform to the requirements of Purchase Order No. 051179.

Signature [illegible] Company M.I.T. Intl Date 4/21/05

PCI-PROMATEC QUALITY ASSURANCE ACCEPTANCE

Signature [illegible] Title FSM Date 4-21-05

Form QC-59
Rev. 2 – 02/18/05

PCI PERFORMANCE CONTRACTING INC PROMATEC	FABRICATION ORDER	PFO - 051179 Page 480

PROJECT NAME	CUSTOMER	CUSTOMER ORDER NO.	JOB NO.
HEMYC TEST #3	SANDIA LAB	401177 Rev. 1	1039

TYPE THREE HOUR / OUTER LAYER QUANTITY _____

LENGTH SEE DRAWING WIDTH SEE DRAWING THICKNESS 1 1/2" TOTAL FT ² _____

SCHEMATIC DRAWING REF. SEE BELOW SCHEMATIC NO. N/A

I.D. NO. 1" CONDUIT # 3E

ORDERED BY MICHAEL JORDAN DATE 3/31/05

SKETCH

SEE ATTACHED SEGMENT DRAWINGS

3E-6
3E-7
3E-8
3E-9
3E-10

CERTIFICATE OF CONFORMANCE

We hereby certify that all items furnished were fabricated with materials provided by PCI-Promatec and conform to the requirements of Purchase Order No. 051179.

Signature [illegible] Company M.I.T. Inc Date 4/21/05

PCI-PROMATEC QUALITY ASSURANCE ACCEPTANCE

Signature [illegible] Title FSM Date 4-21-05

Form QC-59
Rev. 2 – 02/18/05

PCI PERFORMANCE CONTRACTING INC PROMATEC	FABRICATION ORDER	PFO - 051179 Page 481

PROJECT NAME	CUSTOMER	CUSTOMER ORDER NO.	JOB NO.
HEMYC TEST #3	SANDIA LAB	401177 Rev. 1	1039

TYPE THREE HOUR / OUTER LAYER QUANTITY _____

LENGTH SEE DRAWING WIDTH SEE DRAWING THICKNESS 1 1/2" TOTAL FT ² _____

SCHEMATIC DRAWING REF. SEE BELOW SCHEMATIC NO. N/A

I.D. NO. 1" CONDUIT # 3F

ORDERED BY MICHAEL JORDAN DATE 3/31/05

SKETCH

SEE ATTACHED SEGMENT DRAWINGS

3F-6
3F-7
3F-8
3F-9
3F-10

CERTIFICATE OF CONFORMANCE

We hereby certify that all items furnished were fabricated with materials provided by PCI-Promatec and conform to the requirements of Purchase Order No. 051179.

Signature [illegible] Company M.I.T. Int'l Date 4/21/05

PCI-PROMATEC QUALITY ASSURANCE ACCEPTANCE

Signature Mike [illegible] Title FSM Date 4-21-05

Form QC-59
Rev. 2 – 02/18/05

PCI PERFORMANCE CONTRACTING INC PROMATEC	FABRICATION ORDER	PFO - 051179 Page 482

PROJECT NAME	CUSTOMER	CUSTOMER ORDER NO.	JOB NO.
HEMYC TEST #3	SANDIA LAB	401177 Rev. 1	1039

TYPE THREE HOUR / OUTER LAYER QUANTITY _____

LENGTH SEE DRAWING WIDTH SEE DRAWING THICKNESS 2" TOTAL FT ² _____

SCHEMATIC DRAWING REF. SEE BELOW SCHEMATIC NO. N/A

I.D. NO. 1 5/8" UNISTRUT # 3G

ORDERED BY MICHAEL JORDAN DATE 3/31/05

SKETCH

SEE ATTACHED SEGMENT DRAWINGS

3G-1
3G-2

CERTIFICATE OF CONFORMANCE

We hereby certify that all items furnished were fabricated with materials provided by PCI-Promatec and conform to the requirements of Purchase Order No. 051179.

Signature [illegible] Company M.I.T. Int'l Date 4/21/05

PCI-PROMATEC QUALITY ASSURANCE ACCEPTANCE

Signature Mike Jordan Title FSM Date 4-21-05

Form QC-59
Rev. 2 – 02/18/05

PERFORMANCE CONTRACTING INC PROMATEC

FABRICATION ORDER

PFO - 051179

PROJECT NAME	CUSTOMER	CUSTOMER ORDER NO.	JOB NO.
HEMYC TEST #3	SANDIA LAB	401177 Rev. 1	1039

TYPE THREE HOUR / OUTER LAYER QUANTITY

LENGTH SEE DRAWING WIDTH SEE DRAWING THICKNESS 2" TOTAL FT ²

SCHEMATIC DRAWING REF. SEE BELOW SCHEMATIC NO. N/A

I.D. NO. 2" TUBE STEEL # 3H

ORDERED BY MICHAEL JORDAN DATE 3/31/05

SKETCH

SEE ATTACHED SEGMENT DRAWINGS

3H-1
3H-2

CERTIFICATE OF CONFORMANCE

We hereby certify that all items furnished were fabricated with materials provided by PCI-Promatec and conform to the requirements of Purchase Order No. 051179.

Signature [illegible] Company M.I.T. Int'l Date 4/21/05

PCI-PROMATEC QUALITY ASSURANCE ACCEPTANCE

Signature [illegible] Title FSM Date 4-21-05

Form QC-59
Rev. 2 – 02/18/05

PCI PERFORMANCE CONTRACTING INC PROMATEC

FABRICATION ORDER

PFO - 051179

PROJECT NAME	CUSTOMER	CUSTOMER ORDER NO.	JOB NO.
HEMYC TEST #3	SANDIA LAB	401177 Rev. 1	1039

TYPE THREE HOUR / OUTER LAYER QUANTITY _____

LENGTH SEE DRAWING WIDTH SEE DRAWING THICKNESS 1 1/2" TOTAL FT ² _____

SCHEMATIC DRAWING REF. SEE BELOW SCHEMATIC NO. N/A

I.D. NO. JUNCTION BOX # 3I

ORDERED BY MICHAEL JORDAN DATE 3/31/05

SKETCH

SEE ATTACHED SEGMENT DRAWINGS

3I-4
3I-5
3I-6

CERTIFICATE OF CONFORMANCE

We hereby certify that all items furnished were fabricated with materials provided by PCI-Promatec and conform to the requirements of Purchase Order No. 051179.

Signature [illegible] Company M.I.T. Intl Date 4/21/05

PCI-PROMATEC QUALITY ASSURANCE ACCEPTANCE

Signature [illegible] Title FSM Date 4-21-05

Form QC-59
Rev. 2 – 02/18/05

PCI PERFORMANCE CONTRACTING INC PROMATEC

FABRICATION ORDER

PFO - 051179

PROJECT NAME	CUSTOMER	CUSTOMER ORDER NO.	JOB NO.
HEMYC TEST #3	SANDIA LAB	401177 Rev. 1	1039

TYPE THREE HOUR / OUTER LAYER QUANTITY _____

LENGTH SEE DRAWING WIDTH SEE DRAWING THICKNESS 1 1/2" TOTAL FT ² _____

SCHEMATIC DRAWING REF. SEE BELOW SCHEMATIC NO. N/A

I.D. NO. CABLE DROP # 3J

ORDERED BY MICHAEL JORDAN DATE 3/31/05

SKETCH

SEE ATTACHED SEGMENT DRAWINGS

3J-13
3J-14
3J-15
3J-16
3J-17
3J-18
3J-19

CERTIFICATE OF CONFORMANCE

We hereby certify that all items furnished were fabricated with materials provided by PCI-Promatec and conform to the requirements of Purchase Order No. 051179.

Signature [illegible] Company M.I.T. Int'l Date 4/21/05

PCI-PROMATEC QUALITY ASSURANCE ACCEPTANCE

Signature Mike Jordan Title FSM Date 4-21-05

Form QC-59
Rev. 2 – 02/18/05

PCI PERFORMANCE CONTRACTING INC PROMATEC

TRACEABILITY ID REGISTER

REPORT NUMBER 1

PROJECT NAME Sandia #3

PROJECT NUMBER 1039

FABRICATOR MIT-Inner Layer

MT BARRIER WRAP	EXTERNAL FABRIC		INTERNAL FABRIC		FILLER MATERIAL		FILLER MATERIAL		THREAD		HARDWARE		INSPECTOR
MFG	Alpha		Alpha		Thermal Ceramic		N/A		N/A		Hog Rings		
TYPE	2025-9383		2025-9383		½ Kaowool						16SS	11	
IDENTIFICATION NO.	I.D. NO.	R.R.#	I.D. NO.	R.R.#	I.D. NO.	R.R.#	I.D. NO.	R.R.#	I.D. NO.	R.R.#	R.R.#	R.R.#	BY / DATE
	90107		90107		4307A						ID-16SS11		
	RR-051126		RR051126		RR051148								
3-A-1													SKC 4/13/05
3A-2													
3A 3													
3A 4													
3A 5													
3A-6													
3A-7					4306C								VKE 4/18/05

FORM QC-60 rev. 3 (4/15/86)

PCI
RFORMANCE
NTRACTING INC
PROMATEC

TRACEABILITY ID REGISTER

REPORT NUMBER 1

PROJECT NAME Sandia #3

PROJECT NUMBER 1039

FABRICATOR MIT-Inner Layer

MT BARRIER WRAP	EXTERNAL FABRIC		INTERNAL FABRIC		FILLER MATERIAL		FILLER MATERIAL		THREAD		HARDWARE		INSPECTOR
MFG	Alpha		Alpha		Thermal Cer		N/A		N/A		Hog Rings		
TYPE	2025-9383		2025-9383		½ Kaowool						16SS	11	
IDENTIFICATION NO.	I.D. NO.	R.R.#	I.D. NO.	R.R.#	I.D. NO.	R.R.#	I.D. NO.	R.R.#	I.D. NO.	R.R.#	R.R.#	R.R.#	BY / DATE
	90107		90107		4307A						ID-16SS11		
	RR-051126		RR051126		RR051148								
3B-1													JRE/4/12/05
3B2													
3B3													
3B4													
3B4													
3B5													
3B6													
3B7													

FORM QC-60 rev. 3 (4/15/86)

PCI PERFORMANCE CONTRACTING INC PROMATEC

TRACEABILITY ID REGISTER

REPORT NUMBER 1

PROJECT NAME Sandia #3

PROJECT NUMBER 1039

FABRICATOR MIT-INNERLAYER

MT BARRIER WRAP	EXTERNAL FABRIC		INTERNAL FABRIC		FILLER MATERIAL		FILLER MATERIAL		THREAD		HARDWARE		INSPECTOR
MFG	Alpha		Alpha		Thermal Cer.		N/A		N/A		Hog Rings		
TYPE	2025-9383		2025-9383		½ Kaowool						16SS 11		
IDENTIFICATION NO.	I.D. NO.	R.R.#	I.D. NO.	R.R.#	I.D. NO.	R.R.#	I.D. NO.	R.R.#	I.D. NO.	R.R.#	R.R.#	R.R.#	BY / DATE
	90107		90107		4307A						ID-16SS11		
	RR-051126		RR051126		RR051148						↓		JRE/4/18/05
3C 1	↓		↓		↓						↓		JRE 4/18/05
3C-2	↓		↓		4306C						ID-16SS11		JRE/4/18/05
3C-3	90107		90107		4307A						↓		↓
3C 4	↓		↓		↓								
3C 5													

FORM QC-60 rev. 3 (4/15/86)

PCI PERFORMANCE CONTRACTING INC PROMATEC

TRACEABILITY ID REGISTER

REPORT NUMBER 1

PROJECT NAME Sandia #3

PROJECT NUMBER 1039

FABRICATOR MIT-INNERLAYER

MT BARRIER WRAP	EXTERNAL FABRIC		INTERNAL FABRIC		FILLER MATERIAL		FILLER MATERIAL		THREAD		HARDWARE		INSPECTOR
MFG	ALPHA		ALPHA		THERMAL CER		N/A		N/A		Hog Rings		
TYPE	2025-9383		2025-9383		½ KAOWOOL						16SS	11	
IDENTIFICATION NO.	I.D. NO.	R.R.#	I.D. NO.	R.R.#	I.D. NO.	R.R.#	I.D. NO.	R.R.#	I.D. NO.	R.R.#	R.R.#	R.R.#	BY / DATE
	90107		90107		4307A						ID-16SS11		
	RR-051126		RR051126		RR051148								
3D-1	↓		↓		4306C								SEC 4/18/05
3D2					4306C						↓		SEC 4/18/05
3D3	90107		90107		4307A						16SS11		SEC 4/12/05
3D4	↓		↓		↓						↓		↓
3D5													

FORM QC-60 rev. 3 (4/15/86)

PCI
PERFORMANCE CONTRACTING INC
PROMATEC

TRACEABILITY ID REGISTER

REPORT NUMBER 1

PROJECT NAME Sandia #3

PROJECT NUMBER 1039

FABRICATOR MIT-INNERLAYER

MT BARRIER WRAP	EXTERNAL FABRIC		INTERNAL FABRIC		FILLER MATERIAL		FILLER MATERIAL		THREAD		HARDWARE		INSPECTOR
MFG	ALPHA		ALPHA		THERMAL CER		N/A		N/A		Hog Rings		
TYPE	2025-9383		2025-9383		½ KAOWOOL						16SS	11	
IDENTIFICATION NO.	I.D. NO.	R.R.#	I.D. NO.	R.R.#	I.D. NO.	R.R.#	I.D. NO.	R.R.#	I.D. NO.	R.R.#	R.R.#	R.R.#	BY / DATE
	90107		90107		4307A						ID-16SS11		
	RR-051120		RR051120		RR051148						↓		JKE 4/18/05
3E1	↓		↓		4306C						16SS11		JKE 4/18/05
3E2	90107		90107		43074						↓		↓
3E3	↓		↓		↓								
3E4													
3E5													

FORM QC-60 rev. 3 (4/15/86)

PCI PERFORMANCE CONTRACTING INC PROMATEC

TRACEABILITY ID REGISTER

REPORT NUMBER 1

PROJECT NAME Sandia #3

PROJECT NUMBER 1039

FABRICATOR MIT-INNERLAYER

MT BARRIER WRAP	EXTERNAL FABRIC		INTERNAL FABRIC		FILLER MATERIAL		FILLER MATERIAL		THREAD		HARDWARE		INSPECTOR
MFG	Alpha		Alpha		Thermal Cer		N/A		N/A		Hog Rings		
TYPE	2025-9383		2025-9383		½ Kaowool						16SS	11	
IDENTIFICATION NO.	I.D. NO.	R.R.#	I.D. NO.	R.R.#	I.D. NO.	R.R.#	I.D. NO.	R.R.#	I.D. NO.	R.R.#	R.R.#	R.R.#	BY / DATE
	90107		90107		4307A						ID-16SS11		
	RR-051126		RR051126		RR051148								
3F1	↓		↓		↓						↓		DRC 4/20/05
3F2													↓
3F3													
3F4													
3F5													

FORM QC-60 rev. 3 (4/15/86)

PCI PERFORMANCE CONTRACTING INC PROMATEC

TRACEABILITY ID REGISTER

REPORT NUMBER 1

PROJECT NAME Sandia

PROJECT NUMBER 1039

FABRICATOR Inner Layer

MT BARRIER WRAP	EXTERNAL FABRIC		INTERNAL FABRIC		FILLER MATERIAL		FILLER MATERIAL		THREAD		HARDWARE		INSPECTOR
MFG					Thermal Ceramic		~~43654-2~~ XE						
TYPE					2" Ceramic Blanket		Ceramic 6						
IDENTIFICATION NO.	I.D. NO.	R.R.#	I.D. NO.	R.R.#	I.D. NO.	R.R.#	I.D. NO.	R.R.#	I.D. NO.	R.R.#	R.R.#	R.R.#	BY / DATE
3G1	NA		NA		43654-2	105105	N/A		N/A		N/A		SKC 4/26/05
3G2					↓	↓							↓
3G3													

FORM QC-60 rev. 3 (4/15/86)

PCI PERFORMANCE CONTRACTING INC PROMATEC

TRACEABILITY ID REGISTER

REPORT NUMBER 1

PROJECT NAME Sandia

PROJECT NUMBER 1039

FABRICATOR Inner layer

MT BARRIER WRAP	EXTERNAL FABRIC		INTERNAL FABRIC		FILLER MATERIAL		FILLER MATERIAL		THREAD		HARDWARE		INSPECTOR
MFG					Thermal Ceramics		~~4365A-3~~ JRE						
TYPE				2"	Ceramic Blanket		Ceramic Blanket						
IDENTIFICATION NO.	I.D. NO.	R.R.#	I.D. NO.	R.R.#	I.D. NO.	R.R.#	I.D. NO.	R.R.#	I.D. NO.	R.R.#	R.R.#	R.R.#	BY / DATE
3 H-1	NA		NA		4365 A-2	A05110S	NA		N/A		NA		SRC/4/12/05
3 H-2					↓	↓							↓
3H-3													

FORM QC-60 rev. 3 (4/15/86)

PCI
RFORMANCE
NTRACTING INC
PROMATEC

TRACEABILITY ID REGISTER

REPORT NUMBER 1

PROJECT NAME Sandia #3

PROJECT NUMBER 1039

FABRICATOR MIT-Inner Layer

MT BARRIER WRAP	EXTERNAL FABRIC		INTERNAL FABRIC		FILLER MATERIAL		FILLER MATERIAL		THREAD		HARDWARE		INSPECTOR
MFG	Alpha		Alpha		Thermal Cer		N/A		N/A		Hog Rings		
TYPE	2025-9383		2025-9383		½ Kaowool						16SS	11	
IDENTIFICATION NO.	I.D. NO.	R.R.#	I.D. NO.	R.R.#	I.D. NO.	R.R.#	I.D. NO.	R.R.#	I.D. NO.	R.R.#	R.R.#	R.R.#	BY / DATE
	90107		90107		4307A						ID-16SS11		SRC/4/12/08
	RR-051126		RR051126		RR051148								
3I-1													
3I 2													
3I 3													

FORM QC-60 rev. 3 (4/15/86)

PCI PERFORMANCE CONTRACTING INC PROMATEC

TRACEABILITY ID REGISTER

REPORT NUMBER 1

PROJECT NAME Sandia #3

PROJECT NUMBER 1039

FABRICATOR MIT-INNERLAYER

MT BARRIER WRAP	EXTERNAL FABRIC		INTERNAL FABRIC		FILLER MATERIAL		FILLER MATERIAL		THREAD		HARDWARE		INSPECTOR
MFG	ALPHA		ALPHA		THERMAL CER		N/A		N/A		Hog Rings		
TYPE	2025-9383		2025-9383		1½ KAOWOOL						16SS 11		
IDENTIFICATION NO.	I.D. NO.	R.R.#	I.D. NO.	R.R.#	I.D. NO.	R.R.#	I.D. NO.	R.R.#	I.D. NO.	R.R.#	R.R.#	R.R.#	BY / DATE
	90107		90107		R051148						TD-16SS 11		
	RR051126		RR051126										
3J-1													JRE 4/9/15
3J-2													
3J-3													
3J-4													
3J-5													
3J-6													
3J-7													
3J-8													
3J-9													
3J-10													
3J-11													
3J-12													

FORM QC-60 rev. 3 (4/15/86)

PCI PERFORMANCE CONTRACTING INC PROMATEC

REPORT NUMBER 1

PROJECT NAME Sandia #3

PROJECT NUMBER 1039

TRACEABILITY ID REGISTER

FABRICATOR MIT - Alumina Trihydrate Layer

MT BARRIER WRAP	EXTERNAL FABRIC		INTERNAL FABRIC		FILLER MATERIAL		FILLER MATERIAL		THREAD		HARDWARE		INSPECTOR
MFG	Alpha		Alpha		Alumina		N/A		Kevlar		N/A		
TYPE	76281-4634		76281-4634		Trihydrate C-30				Tex 90				
IDENTIFICATION NO.	I.D. NO.	R.R.#	I.D. NO.	R.R.#	I.D. NO.	R.R.#	I.D. NO.	R.R.#	I.D. NO.	R.R.#	R.R.#	R.R.#	BY / DATE
ALL Pads	90107		90107		4630654355				PO 2266				JRE 4/14/05
	RR05 1126		RR05 1126		RR 051106				RR	1899			

FORM QC-60 rev. 3 (4/15/86)

PCI PERFORMANCE CONTRACTING INC PROMATEC

TRACEABILITY ID REGISTER

REPORT NUMBER 1

PROJECT NAME Sandia #3

PROJECT NUMBER 1039

FABRICATOR MIT - Outer Layer

MT BARRIER WRAP	EXTERNAL FABRIC		INTERNAL FABRIC		FILLER MATERIAL		FILLER MATERIAL		THREAD		HARDWARE		INSPECTOR
MFG	Hitco		Hitco		Kaowool		N/A		Alpha		Lacing Hooks +		
TYPE	Refrasil-18		Refrasil-18		#8				Q24		washers		
IDENTIFICATION NO.	I.D. NO.	R.R.#	I.D. NO.	R.R.#	I.D. NO.	R.R.#	I.D. NO.	R.R.#	I.D. NO.	R.R.#	R.R.#	R.R.#	BY / DATE
	4235495		4235495		R051148				35957		ID 38140-250-2		
	RR 051104		RR 051104		↓				RR 051102		ID 22200150-2		
3A-8	↓		↓		↓				↓		↓		JKE 4/19/05
3A-9													↓
3A-10													
3A-11													
3A-12													
3A-13													
3A-14													

FORM QC-60 rev. 3 (4/15/86)

PCI PERFORMANCE CONTRACTING INC PROMATEC

TRACEABILITY ID REGISTER

REPORT NUMBER 1

PROJECT NAME SANDIA #3

PROJECT NUMBER 1039

FABRICATOR MIT - Outer Layer

MT BARRIER WRAP	EXTERNAL FABRIC		INTERNAL FABRIC		FILLER MATERIAL		FILLER MATERIAL		THREAD		HARDWARE		INSPECTOR
MFG	Hitco		Hitco		Kaowool #8		N/A		Alpha		Lacing Hooks +		
TYPE	Refrasil-18		Refrasil-18						Q24		washers		
IDENTIFICATION NO.	I.D. NO.	R.R.#	I.D. NO.	R.R.#	I.D. NO.	R.R.#	I.D. NO.	R.R.#	I.D. NO.	R.R.#	R.R.#	R.R.#	BY / DATE
	4235495		4235495		R051148				35957		ID 38140-250-2		
	RR051104		RR051104		↓				RR051102		ID 22200150-2		
3B-8	↓		↓		↓				↓		↓		JRE 4/16/05
3B-9													↓
3B-10													
3B-11													
3B-12													
3B-13													
3B-14													

FORM QC-60 rev. 3 (4/15/86)

PCI PERFORMANCE CONTRACTING INC PROMATEC

TRACEABILITY ID REGISTER

REPORT NUMBER 1

PROJECT NAME SANDIA #3

PROJECT NUMBER 1039

FABRICATOR MIT - Outer Layer

MT BARRIER WRAP	EXTERNAL FABRIC		INTERNAL FABRIC		FILLER MATERIAL		FILLER MATERIAL		THREAD		HARDWARE		INSPECTOR
MFG	Hitco		Hitco		Kaowool		N/A		ALPHA		Lacing Hooks +		
TYPE	Refrasil-18		Refrasil-18		#8				Q24		washers		
IDENTIFICATION NO.	I.D. NO.	R.R.#	I.D. NO.	R.R.#	I.D. NO.	R.R.#	I.D. NO.	R.R.#	I.D. NO.	R.R.#	R.R.#	R.R.#	BY / DATE
	4235495		4235495		R051148				35957		ID 38140-250-2		
		RR 051104		RR 051104	↓					RR 051102	ID 22200150-2		
3C-6	↓		↓		↓				↓		↓		JRC 4/19/02
3C-7													↓
3C-8													
3C-9													
3C-10													

FORM QC-60 rev. 3 (4/15/86)

PCI PERFORMANCE CONTRACTING INC PROMATEC

TRACEABILITY ID REGISTER

REPORT NUMBER 1

PROJECT NAME SANDIA #3

PROJECT NUMBER 1039

FABRICATOR MIT - Outer Layer

MT BARRIER WRAP	EXTERNAL FABRIC		INTERNAL FABRIC		FILLER MATERIAL		FILLER MATERIAL		THREAD		HARDWARE		INSPECTOR
MFG	Hitco		Hitco		Kaowool #8		N/A		Alpha		Lacing Hooks +		
TYPE	Refrasil-18		Refrasil-18						Q 24		washers		
IDENTIFICATION NO.	I.D. NO.	R.R.#	I.D. NO.	R.R.#	I.D. NO.	R.R.#	I.D. NO.	R.R.#	I.D. NO.	R.R.#	R.R.#	R.R.#	BY / DATE
	4235495		4235495		R0511	48			35957		ID 38140-250-2		
	RR 051104		RR 051104		↓				RR 051102		ID 22200150-2		
3D-6	↓		↓		↓				↓		↓		JRE 1/19/03
3D-7													↓
3D-8													
3D-9													
3D-10													

FORM QC-60 rev. 3 (4/15/86)

PCI PERFORMANCE CONTRACTING INC PROMATEC

TRACEABILITY ID REGISTER

REPORT NUMBER 1

PROJECT NAME SANDIA #3

PROJECT NUMBER 1039

FABRICATOR MIT - Outer Layer

MT BARRIER WRAP	EXTERNAL FABRIC		INTERNAL FABRIC		FILLER MATERIAL		FILLER MATERIAL		THREAD		HARDWARE		INSPECTOR
MFG	Hitco		Hitco		Kaowool #8		N/A		Alpha		Lacing Hooks +		
TYPE	Refrasil-18		Refrasil-18						Q24		washers		
IDENTIFICATION NO.	I.D. NO.	R.R.#	I.D. NO.	R.R.#	I.D. NO.	R.R.#	I.D. NO.	R.R.#	I.D. NO.	R.R.#	R.R.#	R.R.#	BY / DATE
	4235495		4235495		R0511	48			35957		ID 38140-250-2		
	RR051104		RR051104		↓				RR051102		ID 22200150-2		
3E-6	↓		↓		↓				↓		↓		SRE 4/29/05
3E-7													↓
3E-8													
3E-9													
3E-10													
3E-11					4209A						N/A		SRE 4/29/05
					RR051105								

FORM QC-60 rev. 3 (4/15/86)

PERFORMANCE CONTRACTING INC
PROMATEC

TRACEABILITY ID REGISTER

REPORT NUMBER 1
PROJECT NAME SANDIA #3
PROJECT NUMBER 1039

FABRICATOR MIT - Outer Layer

MT BARRIER WRAP	EXTERNAL FABRIC		INTERNAL FABRIC		FILLER MATERIAL		FILLER MATERIAL		THREAD		HARDWARE		INSPECTOR
MFG	Hitco		Hitco		Kaowool		N/A		Alpha		Lacing Hooks +		
TYPE	Refrasil-18		Refrasil-18		#8				Q24		washers		
IDENTIFICATION NO.	I.D. NO.	R.R.#	I.D. NO.	R.R.#	I.D. NO.	R.R.#	I.D. NO.	R.R.#	I.D. NO.	R.R.#	R.R.#	R.R.#	BY / DATE
	4235495		4235495		R051148				35957		ID 38140-250-2		
	RR051104		RR051104		↓				RR051102		ID 22200150-2		
3F-6	↓		↓		↓				↓		↓		JRE 4/19/05 ↓
3F-7													
3F-8													
3F-9													
3F-10													

FORM QC-60 rev. 3 (4/15/86)

PCI PERFORMANCE CONTRACTING INC PROMATEC

TRACEABILITY ID REGISTER

REPORT NUMBER 1

PROJECT NAME SANDIA #3

PROJECT NUMBER 1039

FABRICATOR MIT - Outer Layer

MT BARRIER WRAP	EXTERNAL FABRIC		INTERNAL FABRIC		FILLER MATERIAL		FILLER MATERIAL		THREAD		HARDWARE		INSPECTOR
MFG	Hitco		Hitco		Kaowool		N/A		Alpha		Lacing Hooks &		
TYPE	Refrasil-18		Refrasil-18		2" #8				Q24		washers		
IDENTIFICATION NO.	I.D. NO.	R.R.#	I.D. NO.	R.R.#	I.D. NO.	R.R.#	I.D. NO.	R.R.#	I.D. NO.	R.R.#	R.R.#	R.R.#	BY / DATE
	423549 5		423549 5		4365A-2				35957		ID 38140-250-2		
	RR 051104		RR 051104		RR 051105				RR 051102		ID 22200150-2		
3G-1	↓		↓		↓				↓		↓		JRS 4/19/05 ↓
3G-2													

PCI PERFORMANCE CONTRACTING INC PROMATEC

TRACEABILITY ID REGISTER

REPORT NUMBER 1

PROJECT NAME SANDIA #3

PROJECT NUMBER 1039

FABRICATOR MIT - Outer Layer

MT BARRIER WRAP	EXTERNAL FABRIC		INTERNAL FABRIC		FILLER MATERIAL		FILLER MATERIAL		THREAD		HARDWARE		INSPECTOR
MFG	Hitco		Hitco		Kaowool		N/A		Alpha		Lacing Hooks +		
TYPE	Refrasil-18		Refrasil-18		2"#8				Q24		washers		
IDENTIFICATION NO.	I.D. NO.	R.R.#	I.D. NO.	R.R.#	I.D. NO.	R.R.#	I.D. NO.	R.R.#	I.D. NO.	R.R.#	R.R.#	R.R.#	BY / DATE
	4235495		4235495		436SA-2				35957		ID 38140-250-2		
	RR051104		RR051104		RR051105				RR051102		ID 22200150-2		
3H-1	↓		↓		↓				↓		↓		SAC 4/19/03 ↓
3H-2													

PCI PERFORMANCE CONTRACTING INC PROMATEC

TRACEABILITY ID REGISTER

REPORT NUMBER 1

PROJECT NAME SANDIA #3

PROJECT NUMBER 1039

FABRICATOR MIT - Outer Layer

MT BARRIER WRAP	EXTERNAL FABRIC		INTERNAL FABRIC		FILLER MATERIAL		FILLER MATERIAL		THREAD		HARDWARE		INSPECTOR
MFG	Hitco		Hitco		Kaowool #8		N/A		Alpha		Lacing Hooks +		
TYPE	Refrasil-18		Refrasil-18						Q24		washers		
IDENTIFICATION NO.	I.D. NO.	R.R.#	I.D. NO.	R.R.#	I.D. NO.	R.R.#	I.D. NO.	R.R.#	I.D. NO.	R.R.#	R.R.#	R.R.#	BY / DATE
	4235495		4235495		R051148				35957		ID 38140-250-2		
	RR051104		RR051104		↓				RR051102		ID 22200150-2		
3I-4	↓		↓		↓				↓		↓		JRE 4/19/05
3I-5													↓
3I-6													

FORM QC-60 rev. 3 (4/15/86)

PCI PERFORMANCE CONTRACTING INC PROMATEC

TRACEABILITY ID REGISTER

REPORT NUMBER 1

PROJECT NAME Sandia #3

PROJECT NUMBER 1039

FABRICATOR MIT - Outer Layer

MT BARRIER WRAP	EXTERNAL FABRIC		INTERNAL FABRIC		FILLER MATERIAL		FILLER MATERIAL		THREAD		HARDWARE		INSPECTOR
MFG	Hitco		Hitco		Kaowool		N/A		Alpha		Lacing Hooks +		
TYPE	Refrasil-18		Refrasil-18		#8				Q24		washers		
IDENTIFICATION NO.	I.D. NO.	R.R.#	I.D. NO.	R.R.#	I.D. NO.	R.R.#	I.D. NO.	R.R.#	I.D. NO.	R.R.#	R.R.#	R.R.#	BY / DATE
	4235495		4235495		R051148				35957		ID 381400-250-2		
	RR051104		RR051104		↓				RR051102		ID 222000150-2		
3J-13	↓		↓		↓				↓		↓		JRE 4/16/05
3J-14													↓
3J-15													
3J-16													
3J-17													
3J-18													
3J-19													

FORM QC-60 rev. 3 (4/15/86)

Report No.: _____
Page No. _____

INSTALLATION INSPECTION REPORT
THREE HOUR MT BARRIER

PCI PERFORMANCE CONTRACTING INC PROMATEC

Project Name: Sandia Test #3 Job No.: 1039 Raceway ID No.: Schematic No.: System Description Area: Elevation:

Component Identification Number	Type	Hold Point No.	Tags/ Markings		Visual		Shiplap Overlap		Seam/ Joint		Duct Tape		Stagger		Lacing Hooks		Tie Wire		Anchor		Bolting		Cable Blanket Bundle		Length/ Thick-ness		Repair/ Modif.		Insp. Initials	Insp. Date
			A	U	A	U	A	U	A	U	A	U	A	U	A	U	A	U	A	U	A	U	A	U	A	U	A	U		
3A																			N/A		N/A		N/A							
Thru-A-Lon Horz.-Rod			✓		✓		✓		✓		✓		✓		N/A		N/A		N/A		NA		N/A		✓		N/A		JRC	4/13/05
3A-7			✓		✓		✓		✓		✓		✓		N/A		N/A		N/A		N/A		N/A		✓		N/A		MWJ	4-16-05
OUTER LAYER			✓		✓		✓		✓		~~N/A~~ N/A ✓		✓		✓		✓		N/A		N/A		N/A		✓		N/A		DS	4/16/05

SUPPLEMENTAL MATERIALS TRACEABILITY

Type	Lot No.	Application	Type	Lot No.	Application

Remarks:

Final Acceptance: [signature] Date: 4/16/05 Client Acceptance: Date:

FORM QC-117 Rev. #1 - 02/28/05

VI

Report No.: _____
Page No. _____

PCI PERFORMANCE CONTRACTING INC PROMATEC

INSTALLATION INSPECTION REPORT
THREE HOUR MT BARRIER

Project Name: Sandia. Test 31039.

Job No.: Raceway ID No.: Schematic No.: System Description Area: Elevation:

Component Identification Number	Type	Hold Point No.	Tags/ Markings		Visual		Shiplap Overlap		Seam/ Joint		Duct Tape		Stagger		Lacing Hooks		Tie Wire		Anchor		Bolting		Cable Blanket Bundle		Length/ Thick-ness		Repair/ Modif.		Insp. Initials	Insp. Date
			A	U	A	U	A	U	A	U	A	U	A	U	A	U	A	U	A	U	A	U	A	U	A	U	A	U		
3-B																			N/A		N/A		NA							
THAV AL-TRI			✓		✓		✓		✓		✓		✓		N/A		N/A		N/A		N/A		N/A		✓		N/A		DEC	4/13/05
OUTER LAYER			✓		✓		✓		✓		N/A		✓		✓		✓		N/A		N/A		N/A		✓		N/A		DS	4/16/05

SUPPLEMENTAL MATERIALS TRACEABILITY

Type	Lot No.	Application	Type	Lot No.	Application

Remarks:

Final Acceptance: [signature] Date: 4/16/05

Client Acceptance: Date:

FORM QC-117 Rev. #1 - 02/28/05

Report No.: _____
Page No. _____

INSTALLATION INSPECTION REPORT
THREE HOUR MT BARRIER

Project Name:	Job No.:	Raceway ID No.:	Schematic No.:	System Description	Area:	Elevation:
Sandia Test H3	1039					

I L

Component Identification Number	Type	Hold Point No.	Tags/ Markings A	Tags/ Markings U	Visual A	Visual U	Shiplap Overlap A	Shiplap Overlap U	Seam/ Joint A	Seam/ Joint U	Duct Tape A	Duct Tape U	Stagger A	Stagger U	Lacing Hooks A	Lacing Hooks U	Tie Wire A	Tie Wire U	Anchor A	Anchor U	Bolting A	Bolting U	Cable Blanket Bundle A	Cable Blanket Bundle U	Length/ Thick-ness A	Length/ Thick-ness U	Repair/ Modif. A	Repair/ Modif. U	Insp. Initials	Insp. Date
~~3 A~~ SKE 4/13/05																														
3 C			✓		✓		✓		✓		✓		✓		N/A		N/A		N/A		N/A		N/A		✓		N/A		SKE	4/13/05
Thr AL on																														
Horz - Rad.																														
3C-6			✓		✓		✓		✓		✓		✓		N/A		N/A		N/A		N/A		N/A		✓		N/A		MWJ	4-16-05
OUTER			✓		✓		✓		✓		N/A		✓		✓		✓		N/A		N/A		N/A		✓		N/A		DS	4/16/05
LAYER																														

SUPPLEMENTAL MATERIALS TRACEABILITY

Type	Lot No.	Application	Type	Lot No.	Application	Remarks:

Final Acceptance: [signature] Date: 4/16/05 Client Acceptance: Date:

FORM QC-117 Rev. #1 - 02/28/05

PCI PERFORMANCE CONTRACTING INC PROMATEC

Report No.: _____
Page No. _____

INSTALLATION INSPECTION REPORT
THREE HOUR MT BARRIER

Project Name: Sandia. Test 3 | Job No.: 1039- | Raceway ID No.: | Schematic No.: | System Description | Area: | Elevation:

Component Identification Number	Type	Hold Point No.	Tags/ Markings A	Tags/ Markings U	Visual A	Visual U	Shiplap Overlap A	Shiplap Overlap U	Seam/ Joint A	Seam/ Joint U	Duct Tape A	Duct Tape U	Stagger A	Stagger U	Lacing Hooks A	Lacing Hooks U	Tie Wire A	Tie Wire U	Anchor A	Anchor U	Bolting A	Bolting U	Cable Blanket Bundle A	Cable Blanket Bundle U	Length/ Thick-ness A	Length/ Thick-ness U	Repair/ Modif. A	Repair/ Modif. U	Insp. Initials	Insp. Date
3-D Thn AL on Horz-Radi			✓		✓		✓		✓		✓		✓		N/A		N/A		N/A		NA		N/A		✓		N/A		SRC	4/13/05
3D-6+7			✓		✓		✓		✓		✓		✓		N/A		N/A		N/A		N/A		N/A		✓		N/A		MWJ	4-16-05
OUTER LAYER			✓		✓		✓		✓		N/A		✓		✓		✓		N/A		N/A		N/A		✓		N/A		DS	4/16/05

SUPPLEMENTAL MATERIALS TRACEABILITY

Type	Lot No.	Application	Type	Lot No.	Application	Remarks:

Final Acceptance: Doreas [signature] | Date: 4/16/05 | Client Acceptance: | Date:

FORM QC-117 Rev. #1 - 02/28/05

IV

Report No.: _____
Page No. _____

INSTALLATION INSPECTION REPORT
THREE HOUR MT BARRIER

Project Name: Sandia Test #3 | Job No.: 1039 | Raceway ID No.: | Schematic No.: | System Description | Area: | Elevation:

Component Identification Number	Type	Hold Point No.	Tags/ Markings A	Tags/ Markings U	Visual A	Visual U	Shiplap Overlap A	Shiplap Overlap U	Seam/ Joint A	Seam/ Joint U	Duct Tape A	Duct Tape U	Stagger A	Stagger U	Lacing Hooks A	Lacing Hooks U	Tie Wire A	Tie Wire U	Anchor A	Anchor U	Bolting A	Bolting U	Cable Blanket Bundle A	Cable Blanket Bundle U	Length/ Thick-ness A	Length/ Thick-ness U	Repair/ Modif. A	Repair/ Modif. U	Insp. Initials	Insp. Date
3E																														
THRU-AL on Horz ~~Rad~~ 90° SRE 4/01/05 VENT.			✓		✓		✓		✓		✓		✓		N/A		N/A		N/A		N/A		N/A		✓		N/A		SRE	4/01/05
3-E~~10~~5 mwl 4-16-05			✓		✓		✓		✓		✓		✓		N/A		N/A		N/A		N/A		N/A		✓		N/A		mwl	4-16-05
OUTER LAYER			✓		✓		✓		✓		N/A		✓		✓		✓		N/A		N/A		N/A		✓		N/A		DS	4/16/05
3-E11			✓		✓		✓		✓		N/A		✓		✓		✓		N/A		N/A		N/A		✓		N/A		SRE	3/18/05

SUPPLEMENTAL MATERIALS TRACEABILITY

Type	Lot No.	Application	Type	Lot No.	Application

Remarks:

Final Acceptance: Jose R. Espinoza Date: 4/19/05 Client Acceptance: Date:

FORM QC-117 Rev. #1 - 02/28/05

PCI PERFORMANCE CONTRACTING INC PROMATEC

Report No.: _____
Page No. _____

INSTALLATION INSPECTION REPORT
THREE HOUR MT BARRIER

Project Name: Sandia Test
Job No.: 1039
Raceway ID No.:
Schematic No.:
System Description
Area:
Elevation:

Component Identification Number	Type	Hold Point No.	Tags/ Markings		Visual		Shiplap Overlap		Seam/ Joint		Duct Tape		Stagger		Lacing Hooks		Tie Wire		Anchor		Bolting		Cable Blanket Bundle		Length/ Thick-ness		Repair/ Modif.		Insp. Initials	Insp. Date
			A	U	A	U	A	U	A	U	A	U	A	U	A	U	A	U	A	U	A	U	A	U	A	U	A	U		
3F																														
THAV-ALT1			✓		✓		✓		✓		✓		✓		N/A		N/A		N/A		N/A		N/A		✓		N/A		SAC 4/13/05	4/13/05
OUTER LAYER			✓		✓		✓		✓		N/A		✓		✓		✓		N/A		N/A		N/A		✓		N/A		DS	4/16/05

SUPPLEMENTAL MATERIALS TRACEABILITY

Type	Lot No.	Application	Type	Lot No.	Application	Remarks:

Final Acceptance: [signature] Date: 4/16/05
Client Acceptance: Date:

FORM QC-117 Rev. #1 - 02/28/05

PCI PERFORMANCE CONTRACTING INC PROMATEC

Report No.: _____
Page No. _____

INSTALLATION INSPECTION REPORT
THREE HOUR MT BARRIER

Project Name: Sandia Test 3 Job No.: 1039 Raceway ID No.: Schematic No.: System Description Area: Elevation:

Component Identification Number	Type	Hold Point No.	Tags/ Markings A	Tags/ Markings U	Visual A	Visual U	Shiplap Overlap A	Shiplap Overlap U	Seam/ Joint A	Seam/ Joint U	Duct Tape A	Duct Tape U	Stagger A	Stagger U	Lacing Hooks A	Lacing Hooks U	~~Wire~~ Tie A	~~Wire~~ Tie U	Anchor A	Anchor U	Bolting A	Bolting U	Cable Blanket Bundle A	Cable Blanket Bundle U	Length/ Thickness A	Length/ Thickness U	Repair/ Modif. A	Repair/ Modif. U	Insp. Initials	Insp. Date
3G															SRE 4/16/05															
Inner Blanket			NA		✓		NA		✓		✓		NA		~~NA~~		N/A		N/A		N/A		N/A		✓		N/A		SRE	4/13/05
OUTER LAYER			✓		✓		✓		✓		N/A		✓		✓		✓		N/A		N/A		N/A		✓		✓ N/A		DS	4/16/05

SUPPLEMENTAL MATERIALS TRACEABILITY

Type	Lot No.	Application	Type	Lot No.	Application

Remarks:

Final Acceptance: [signature] Date: 4/16/05 Client Acceptance: Date:

FORM QC-117 Rev. #1 - 02/28/05

PCI PERFORMANCE CONTRACTING INC PROMATEC

Report No.: _____
Page No. _____

INSTALLATION INSPECTION REPORT
THREE HOUR MT BARRIER

Project Name: Sandia Test 1039 | Job No.: | Raceway ID No.: | Schematic No.: | System Description | Area: | Elevation:

Component Identification Number	Type	Hold Point No.	Tags/ Markings		Visual		Shiplap Overlap		Seam/ Joint		Duct Tape		Stagger		Lacing Hooks		Wire Tie		Anchor		Bolting		Cable Blanket Bundle		Length/ Thickness		Repair/ Modif.		Insp. Initials	Insp. Date
			A	U	A	U	A	U	A	U	A	U	A	U	A	U	A	U	A	U	A	U	A	U	A	U	A	U		
3H Inner Blanket			NA		✓		N/A		✓		✓		NA		SRE 4/13/05 ~~N/A~~				N/A		N/A		NA		✓		N/A		SRE	4/13/05
Outer Layer			✓		✓		✓		✓		N/A		✓		✓		✓		N/A		N/A		N/A		✓		✓		SRE	4/18/05

SUPPLEMENTAL MATERIALS TRACEABILITY

Type	Lot No.	Application	Type	Lot No.	Application	Remarks:

Final Acceptance: Jon R. Eyler | Date: 4/19/05 | Client Acceptance: | Date:

FORM QC-117 Rev. #1 - 02/28/05

PCI PERFORMANCE CONTRACTING INC PROMATEC

Report No.: _____
Page No. _____

INSTALLATION INSPECTION REPORT
THREE HOUR MT BARRIER

Project Name:	Job No.:	Raceway ID No.:	Schematic No.:	System Description	Area:	Elevation:
Sandia Test 3	1039			JUNCTION BOX		

Component Identification Number	Type	Hold Point No.	Tags/ Markings		Visual		Shiplap Overlap		Seam/ Joint		Duct Tape		Stagger		Lacing Hooks		Tie Wire		Anchor		Bolting		Cable Blanket Bundle		Length/ Thick-ness		Repair/ Modif.		Insp. Initials	Insp. Date
			A	U	A	U	A	U	A	U	A	U	A	U	A	U	A	U	A	U	A	U	A	U	A	U	A	U		
3I																														
Thr-AL.			✓		✓		✓		✓		✓		✓		N/A		N/A		N/A		N/A		N/A		✓		N/A		JRE	4/16/05
OUTER LAYER			✓		✓		✓		✓		N/A		✓		✓		✓		N/A		N/A		N/A		✓		N/A		DS	4/16/05

SUPPLEMENTAL MATERIALS TRACEABILITY

Type	Lot No.	Application	Type	Lot No.	Application	Remarks:

Final Acceptance: [signature] Date: 4/16/05 Client Acceptance: Date:

FORM QC-117 Rev. #1 - 02/28/05

PCI PERFORMANCE CONTRACTING INC PROMATEC

Report No.: _____
Page No. _____

INSTALLATION INSPECTION REPORT
THREE HOUR MT BARRIER

Project Name:	Job No.:	Raceway ID No.:	Schematic No.:	System Description	Area:	Elevation:
Sandia Test #3-1039				Cable Drop		

Component Identification Number	Type	Hold Point No.	Tags/ Markings		Visual		Shiplap Overlap		Seam/ Joint		Duct Tape		Stagger		Lacing Hooks		Tie Wire		Anchor		Bolting		Cable Blanket Bundle		Length/ Thick-ness		Repair/ Modif.		Insp. Initials	Insp. Date
			A	U	A	U	A	U	A	U	A	U	A	U	A	U	A	U	A	U	A	U	A	U	A	U	A	U		
3J																														
Inner Layer			✓		✓		✓		✓		✓		✓		N/A		N/A		N/A		N/A		✓		✓		N/A		JRE	4/19/05
Thru-Al. Tap																														
Outer Layer			✓		✓		✓		✓		N/A		✓		✓		✓		N/A		N/A		N/A		✓		✓		JRE	4/19/05

SUPPLEMENTAL MATERIALS TRACEABILITY

Type	Lot No.	Application	Type	Lot No.	Application	Remarks:

Final Acceptance: Jose R. Espin Date: 4/19/05

Client Acceptance: Date:

FORM QC-117 Rev. #1 02/28/05

Appendix G

QUALITY ASSURANCE DOCUMENTATION

Quality Assurance Statement

Omega Point Laboratories, Inc. is an independent, wholly owned company incorporated in the state of Texas, devoted to engineering, inspection, quality assurance and testing of building materials, products and assemblies. The company has developed and implemented a Quality Assurance Program designed to provide its clients with a planned procedure of order and document processing for inspection and testing services it provides to assure conformity to requirements, codes, standards and specifications. The Program is designed to meet the intent of ANSI 45.2 Quality Assurance Program Requirements for Nuclear Power Plants, and complies with the requirements of the ASME Code, SPPE, Military Standards and other less stringent programs. It is the Laboratory's intention to adhere strictly to this Program, to assure that the services offered to its clients remains of the highest quality and accuracy possible.

The overall responsibility of the supervision, operation and coordination of this Quality Assurance Program is that of the Quality Assurance Manager, a person not involved with the performance of the inspection or testing services, and who is under the full time employ of the Laboratory. This individual is responsible for implementing and enforcing all procedures presented in the Quality Assurance Manual and the Procedures Manual. All personnel involved with activities which fall under the scope of this Program are required to cooperate with the letter and intent of this Program.

All QA Surveillance documents remain on file at the Laboratory, and are available for inspection by authorized personnel in the performance of an on-site QA Audit. All materials, services and supplies utilized herein were obtained with appropriate QA Certifications of Compliance, and the inclusion of these in this report would not be practical nor useful to the reader.

OMEGA POINT LABORATORIES ®

ACCEPTABILITY DOCUMENTATION

PROJECT NO. 14790-123265

SANDIA NATIONAL LABORATORIES

The following signatures attest to the review and acceptance of each attribute (Hold Point) listed regarding the above-noted project:

I. TEST ARTICLE DECK

Omega Point Laboratories, Inc.	1/27/05 Date
SANDIA National Laboratories	1/27/05 Date

II. TEST ARTICLE RACEWAYS & JB

Omega Point Laboratories, Inc.	1/27/05 Date
SANDIA National Laboratories	1/27/05 Date

Omega Point Laboratories, Inc.
16015 Shady Falls Road
Elmendorf, Texas 78112-9784 USA
210-635-8100 / FAX: 210-635-8101 / 800-966-5253
www.opl.com moreinfo@opl.com

III. TEST SPECIMEN THERMOCOUPLE PLACEMENT

Omega Point Laboratories, Inc. — Date: 2/8/05

SANDIA National Laboratories — Date: 2/8/05

IV. COPPER WIRE THERMOCOUPLE PLACEMENT

Omega Point Laboratories, Inc. — Date: 2/8/05

SANDIA National Laboratories — Date: 2/8/05

V. PRE ERFBS INSTALLATION APPROVAL

Omega Point Laboratories, Inc. — Date: 2/8/05

SANDIA National Laboratories — Date: 2/8/05

VI. ERFBS INSTALLATION APPROVAL

Omega Point Laboratories, Inc. — Date: 4/25/05

SANDIA National Laboratories — Date: 4/25/05

VII. COMPLETED PRE TEST ARTICLE INSPECTION

Omega Point Laboratories, Inc. — Date: 4/25/05

SANDIA National Laboratories — Date: 4/25/05

VIII. PRE-TEST DATA ACQUISITION VERIFICATION

Omega Point Laboratories, Inc. — Date: 4/25/05

SANDIA National Laboratories — Date: 4/25/05

IX. POST-TEST DATA ACQUISITION VERIFICATION

Omega Point Laboratories, Inc. — Date: 4/25/05

SANDIA National Laboratories — Date: 4/25/05

Test 3

EVENT LOG

Three-Hour Fire Resistance Test of Conduits Protected by M.T. ERFBS

PROJECT NUMBER:

14790-123265

SANDIA NATIONAL LABORATORIES

EVENT LOG

SANDIA NATIONAL LABORATORIES
Client # 14790

NOTE:
This Log is used to document the date and note the significant events during the completion of test project #123265 for SANDIA National Laboratories. The following is a brief description of this project:

Project No. 123265: **Three Hour ASTM E1725 Fire Test of Various Conduits, a Cable Drop and a Junction Box Protected by M.T. 3-Hour Rated ERFBS.**

Page 1 of ___

ITEM	DATE	INIT'L
Request for Quotation (RFQ) #7253 is received by Omega Point Labs from Patricia Brown of Sandia Labs.	11/5/04	CH
Technical Proposal No. P041206-01 is issued to Sandia Labs by Deg Priest, President of Omega Point Labs.	12/6	CH
Sandia Labs issues Purchase Order No. 389803 to Omega Point.	12/22	CH
Deg Priest accepts contract terms by signing and returning the P.O. signature page by fax on 12/22/04 and again on 12/27/04 for some minor changes to the P.O.	12/27	CH
Deg Priest completes the initial project drawings for Sandia review	12/30	CH
Project Hold Points are determined by Frank Wyant, Sandia Technical Contact and Connie Humphrey, OPL QA/QC Director.	1/4/05	CH
Cleda Patton, QA Assistant orders the steel for the project test deck.	1/4	CH
Connie Humphrey receives approval for the qualification method of the thermocouple supplier, 10 CFR50 app B approval.	1/5	CH
OPL QA/QC personnel receive the steel shipment and OPL technicians begin fabrication of the Sandia project steel decks.	1/5	CH
Deck fabrication continues.	1/6	CH
Deck fabrication by OPL technicians continues and Test 1 (Proj. #123263) and Test 3 (Proj. 123265).	1/7	CH
	1/7/05	CH

EVENT LOG

SANDIA NATIONAL LABORATORIES
Client # 14790

NOTE:
This Log is used to document the date and note the significant events during the completion of test project #123265 for SANDIA National Laboratories. The following is a brief description of this project:

Project No. 123265: **Three Hour ASTM E1725 Fire Test of Various Conduits, a Cable Drop and a Junction Box Protected by M.T. 3-Hour Rated ERFBS.**

Page 2 of ___

ITEM	DATE	INIT'L
Determination was made by Frank Wyant regarding the extent of the video monitoring by OPL QA/QC personnel during the construction process of the test articles.	1/7/05	CH
Deg Priest issues the Junction Box thermocouple drawings.	1/11	CH
OPL QA/QC personnel receive the documents for Shipment #44855 enroute to Omega Point from Sandia Labs	1/11	CH
OPL QA/QC personnel ship 46 quick Disconnect Thermocouples to Bruce Levin Sandia Labs Technical contact for verification using Transmittal Letter #1126.	1/11	CH
Construction is completed on the test decks for Test 1 and Test 3. Quality verification is completed by OPL QA/QC personnel.	1/12	CH
OPL QA/QC personnel receive the hardware shipment #44855 from Sandia Labs. All items received.	1/14	CH
OPL technicians begin fabrication of the conduit and cable tray raceways.	1/18	CH
Raceway fabrication continues.	1/19	CH
Chuck Girard, Sandia Consultant arrives at OPL. Deg Priest meets him to discuss project with key personnel.	1/24	CH
Chuck Girard verifies test article measurements.	1/25	CH
Deg Priest issues Rev. 1 to Figure 2, of Test 3 Raceway Layout.	1/25 1/25/05	CH CH

Test 3

EVENT LOG

SANDIA NATIONAL LABORATORIES
Client # 14790

NOTE:
This Log is used to document the date and note the significant events during the completion of test project #123265 for SANDIA National Laboratories. The following is a brief description of this project:

Project No. 123265: **Three Hour ASTM E1725 Fire Test of Various Conduits, a Cable Drop and a Junction Box Protected by M.T. 3-Hour Rated ERFBS.**

Page 3 of ___

ITEM	DATE	INIT'L
conduits, supports and the Junction Box are weighed by OPL technicians.	1/26/05	CH
The conduits and supports installation to the test deck is started by OPL technicians.	1/26	CH
Installation of conduits, supports and the Junction Box is completed by OPL technicians and is verified by OPL QA/QC personnel.	1/27	CH
Frank Wyant, Sandia Technical Support arrives at OPL and a group meeting is held for all involved personnel.	1/27	CH
Conduits are marked by OPL technicians for thermocouple location.	1/28	CH
The Junction Box and frame and the L supports (unistrut and tubing) are weighed.	1/28	CH
The L supports are installed and verified.	1/31	CH
The Junction Box and frame are installed by technicians.	2/1	CH
The Bare #8 copper wires are cut by OPL technicians for the 3B 4" conduit. Quick Disconnect TC's arrive.	2/2	CH
The Bare #8 copper wire is cut for 3D 2-1/2" conduit.	2/3	CH
OPL technicians install the teflon coated thermocouples to the conduits. OPL QA/QC personnel verify the thermocouple locations.	2/3	
The thermocouples are installed on the L supports (unistrut and	2/4	CH
	2/4/05	CH

EVENT LOG

SANDIA NATIONAL LABORATORIES
Client # 14790

NOTE:
This Log is used to document the date and note the significant events during the completion of test project #123265 for SANDIA National Laboratories. The following is a brief description of this project:

Project No. 123265: **Three Hour ASTM E1725 Fire Test of Various Conduits, a Cable Drop and a Junction Box Protected by M.T. 3-Hour Rated ERFBS.**

ITEM	DATE	INIT'L
tubing). This is verified by OPL QA/QC personnel.	2/4/05	CH
The Quick Disconnect thermocouples are installed on the Junction Box and verified by QA/QC personnel.	2/4	CH
Technicians cut the Bare #8 Copper wire for the airdrop.	2/4	CH
The bundles of the Bare #8 copper wire are completed for the conduits and the airdrop.	2/5	CH
The weight and lengths of the Bare #8 Copper wire bundles are recorded and the thermocouples imbedded are reverified.	2/7	CH
Frank Wyant arrives from Sandia.	2/7	CH
Mike Murphy and Michael Jordan from PCI Promatec arrive to meet with Frank Wyant.	2/8	CH
Frank Wyant approves the thermocouple placement, the Copper wire TC placement and the pre ERFBS installation.	2/8	CH
Frank Wyant and PCI Promatec personnel depart OPL.	2/8	CH
OPL technicians pull the Bare #8 copper wire bundles into conduits members 3B, 3D and 3F with OPL QA/QC personnel recording on video.	2/9	CH
The single Bare #8 Copper wires are installed on the remaining conduits and hangers.	2/10	CH
Frank Wyant and Chuck Girard from Sandia arrive.	2/22	CH
Chuck Girard departs OPL.	2/22/05	CH

EVENT LOG

SANDIA NATIONAL LABORATORIES
Client # 14790

NOTE:
This Log is used to document the date and note the significant events during the completion of test project #123265 for SANDIA National Laboratories. The following is a brief description of this project:

Project No. 123265: **Three Hour ASTM E1725 Fire Test of Various Conduits, a Cable Drop and a Junction Box Protected by M.T. 3-Hour Rated ERFBS.**

Page 5 of ___

ITEM	DATE	INIT'L
Frank Wyant reverifies test assembly #3.	2/23/05	CH
Frank Wyant departs OPL.	3/24	CH
Michael Jordan, Frank Haes and Willy Theis from PCI Promatec arrive at OPL. Installation procedures are reviewed with Cleda Patton, OPL QA/QC.	4/11	CH
Chuck Girard arrives at OPL.	4/11	CH
Jose Espinosa with PCI Promatec arrives with the Hemyc material	4/11	CH
Installation of the Hemyc begins on Test Assembly 3.	4/11	CH
Installation continues with OPL QA/QC and Chuck Girard observing.	4/12	CH
Jose Espinosa departs OPL	4/13	CH
Installation continues.	4/14	CH
DeDe Smithwick from PCI Promatec arrives to take over quality control function.	4/15	CH
Chuck Girard departs OPL.	4/15	CH
PCI Promatec installers complete 3A, 3B, 3C, 3D, 3E and 3F are completed.	4/16	CH
DeDe Smithwick departs OPL.	4/16	CH
Jose Espinosa returns to take over quality control for Promatec.	4/18	CH
3H and 3I are completed.	4/18	CH
Bruce Levin from Sandia arrives.	4/18	CH
The Airdrop 3J is completed.	4/19	CH
Promatec personnel depart OPL.	4/19	CH
Bruce Levin from Sandia observes the deck insulation procedure done by OPL technicians.	4/20	CH
	4/20/05	CH

EVENT LOG

SANDIA NATIONAL LABORATORIES
Client # 14790

NOTE:
This Log is used to document the date and note the significant events during the completion of test project #123265 for SANDIA National Laboratories. The following is a brief description of this project:

Project No. 123265: **Three Hour ASTM E1725 Fire Test of Various Conduits, a Cable Drop and a Junction Box Protected by M.T. 3-Hour Rated ERFBS.**

Page 6 of ___

ITEM	DATE	INIT'L
Bruce Levin observes the test assembly installation, as the test furnace and data acquisition connection.	4/21/05	CH
Frank Wyant, Bruce Levin and Chuck Girard arrive at OPL. Mark Salley, USNRC arrives. Jason Driesbach arrives, also from the USNRC with Kendra Hill. All personnel inspect the test article on the furnace.	4/25	CH
Michael Jordan and Jose Espinosa from PCI Promatec arrive at OPL. Deg Priest and Mike Dey do the pre test checklist. Temperature at the time of test start is 67°F with a 76% Relative Humidity. On site to to witness this three hour test of test assembly #123265 are:	4/25	CH
Frank Wyant — Sandia Natl Labs		
Bruce Levin — " " "		
Chuck Girard — Sandia Consultant		
Mark Salley — US ~~RNC~~ NRC		
Jason Driesbach — " CH 4/25/05		
Kendra Hill — USNRC		
Deg Priest — Omega Point Labs		
Clida Patton — " " "		
Connie Humphrey — " " "		
Oscar Estrada — " " "		
Mike Dey — " " "		
Troy Bjontad — " " "		
Laudencio Castanon — " " "		
Michael Jordan — PCI Promatec		
Jose Espinosa — " "	4/25/05	CH

EVENT LOG

SANDIA NATIONAL LABORATORIES
Client # 14790

NOTE:
This Log is used to document the date and note the significant events during the completion of test project #123265 for SANDIA National Laboratories. The following is a brief description of this project:

Project No. 123265: **Three Hour ASTM E1725 Fire Test of Various Conduits, a Cable Drop and a Junction Box Protected by M.T. 3-Hour Rated ERFBS.**

Page 7 of ___

ITEM	DATE	INIT'L
The three hour fire test of assembly #123265 began at 9:02am and is finished by 12:03pm.	4/25/05	CH
The test article is moved to the hose stream test area following the fire test by overhead crane. A five minute hose stream test was run using 75 psi water pressure and a 15 degree spray pattern from a distance of 10 feet.	4/25	CH
After a cooling down period the test article was torn down and inspected by Deg Priest, Cleda Patton and witnessed by clients and USNRC personnel.	4/25	CH
The post test data acquisition equipment verication was done by Mike Dey, OPL D2 Mgr.	4/25/05	CH
- end -		

Omega Point Laboratories, Inc.
16015 Shady Falls Road
Elmendorf, Texas 78112
800-966-5253 FAX 210-635-8101

Certificate of Verification

Certification No.: 92148

Verification Date: 04/11/2005

Re-verification Date: 10/11/2005

Manufacturer: Yokogawa

Model No.: 300 Channel DAU-

Serial No.: 48JF0082

Equipment Description: 300 Channel Data Acquisition System with YOKOGAWA Darwin Series

Calibration Sources: Tegam T-156701 due: 07/26/2005

PERFORMANCE:

Temperature: (75°F) 1.3/-0.3	Temperature: (150°F) 1.2/-0.6	Temperature: (300°F) 1.1/-0.5	Temperature: (400°F) +1.2/-0.4	Temperature: (1000°F) 1.3/-0.5	Temperature: (2000°F) 2.6/-1.5

Measurement Uncertainty: ± 0.2%

Verification Performed by:

Mike Dey
Manager Fire Resistance

Verification Approved by:

Deg Priest
President/Chief Technical Officer

Channel Verification for Yokogawa 300 Channel

Serial No.: 48JF0082

Calibrator Used: SNT156701

Temperature Setting (°F): 75.0

Channel No.	Reading (°F)	+/-	Channel No.	Reading (°F)	+/-	Channel No.	Reading (°F)	+/-
1	75.4	0.4	101	75.0	0.0	201	75.0	0.0
2	75.2	0.2	102	75.0	0.0	202	75.0	0.0
3	75.2	0.2	103	75.2	0.2	203	75.0	0.0
4	75.4	0.4	104	75.2	0.2	204	75.0	0.0
5	75.4	0.4	105	75.2	0.2	205	75.2	0.2
6	75.6	0.6	106	75.2	0.2	206	75.2	0.2
7	75.6	0.6	107	75.2	0.2	207	75.4	0.4
8	75.6	0.6	108	75.4	0.4	208	75.6	0.6
9	75.7	0.7	109	75.6	0.6	209	75.7	0.7
10	75.9	0.9	110	75.7	0.7	210	75.9	0.9
11	75.2	0.2	111	74.8	-0.2	211	74.8	-0.2
12	75.2	0.2	112	74.8	-0.2	212	74.7	-0.3
13	75.2	0.2	113	74.8	-0.2	213	74.8	-0.2
14	75.2	0.2	114	75.2	0.2	214	74.8	-0.2
15	75.2	0.2	115	75.2	0.2	215	75.0	0.0
16	75.2	0.2	116	75.2	0.2	216	75.0	0.0
17	75.4	0.4	117	75.2	0.2	217	75.2	0.2
18	75.4	0.4	118	75.4	0.4	218	75.2	0.2
19	75.6	0.6	119	75.6	0.6	219	75.2	0.2
20	75.7	0.7	120	75.7	0.7	220	75.6	0.6
21	75.4	0.4	121	75.7	0.7	221	74.8	-0.2
22	75.4	0.4	122	75.4	0.4	222	74.7	-0.3
23	75.4	0.4	123	75.4	0.4	223	74.8	-0.2
24	75.2	0.2	124	75.4	0.4	224	75.0	0.0
25	75.6	0.6	125	75.4	0.4	225	75.0	0.0
26	75.7	0.7	126	75.4	0.4	226	75.0	0.0
27	75.7	0.7	127	75.6	0.6	227	75.0	0.0
28	75.7	0.7	128	75.6	0.6	228	75.2	0.2
29	75.7	0.7	129	75.7	0.7	229	75.2	0.2
30	75.9	0.9	130	75.9	0.9	230	75.6	0.6
31	75.4	0.4	131	74.8	-0.2	231	74.7	-0.3
32	75.2	0.2	132	74.8	-0.2	232	74.7	-0.3
33	75.4	0.4	133	74.7	-0.3	233	74.8	-0.2
34	75.2	0.2	134	74.8	-0.2	234	74.8	-0.2
35	75.4	0.4	135	75.0	0.0	235	75.0	0.0
36	75.4	0.4	136	75.0	0.0	236	75.0	0.0
37	75.4	0.4	137	75.0	0.0	237	75.2	0.2
38	75.4	0.4	138	75.2	0.2	238	75.2	0.2
39	75.7	0.7	139	75.2	0.2	239	75.4	0.4
40	75.9	0.9	140	75.7	0.7	240	75.6	0.6
41	75.2	0.2	141	75.0	0.0	241	75.4	0.4
42	75.2	0.2	142	74.8	-0.2	242	75.2	0.2
43	75.2	0.2	143	75.0	0.0	243	75.2	0.2
44	75.2	0.2	144	75.0	0.0	244	75.2	0.2
45	75.2	0.2	145	75.0	0.0	245	75.2	0.2
46	75.2	0.2	146	75.0	0.0	246	75.2	0.2
47	75.2	0.2	147	75.0	0.0	247	75.4	0.4
48	75.4	0.4	148	75.2	0.2	248	75.6	0.6
49	75.4	0.4	149	75.2	0.2	249	75.7	0.7
50	75.7	0.7	150	75.6	0.6	250	76.3	1.3
51	74.8	-0.2	151	75.2	0.2	251	75.0	0.0
52	75.0	0.0	152	75.2	0.2	252	75.0	0.0
53	75.0	0.0	153	75.2	0.2	253	74.8	-0.2
54	75.2	0.2	154	75.2	0.2	254	75.0	0.0

55	75.2	0.2	155	75.2	0.2	255	75.2	0.2
56	75.2	0.2	156	75.2	0.2	256	75.2	0.2
57	75.2	0.2	157	75.4	0.4	257	75.2	0.2
58	75.4	0.4	158	75.4	0.4	258	75.2	0.2
59	75.6	0.6	159	75.6	0.6	259	75.6	0.6
60	75.7	0.7	160	75.7	0.7	260	75.7	0.7
61	75.4	0.4	161	75.2	0.2	261	75.0	0.0
62	75.2	0.2	162	75.2	0.2	262	75.0	0.0
63	75.2	0.2	163	75.2	0.2	263	75.0	0.0
64	75.2	0.2	164	75.2	0.2	264	75.2	0.2
65	75.2	0.2	165	75.2	0.2	265	75.2	0.2
66	75.2	0.2	166	75.2	0.2	266	75.2	0.2
67	75.4	0.4	167	75.4	0.4	267	75.2	0.2
68	75.4	0.4	168	75.4	0.4	268	75.4	0.4
69	75.7	0.7	169	75.6	0.6	269	75.6	0.6
70	75.9	0.9	170	75.7	0.7	270	75.7	0.7
71	75.4	0.4	171	74.7	-0.3	271	75.2	0.2
72	75.2	0.2	172	74.7	-0.3	272	75.2	0.2
73	75.4	0.4	173	74.8	-0.2	273	75.2	0.2
74	75.4	0.4	174	74.8	-0.2	274	75.2	0.2
75	75.4	0.4	175	75.2	0.2	275	75.2	0.2
76	75.4	0.4	176	75.2	0.2	276	75.4	0.4
77	75.6	0.6	177	75.2	0.2	277	75.4	0.4
78	75.6	0.6	178	75.4	0.4	278	75.6	0.6
79	75.7	0.7	179	75.6	0.6	279	75.7	0.7
80	75.7	0.7	180	75.7	0.7	280	76.1	1.1
81	75.2	0.2	181	75.6	0.6	281	75.0	0.0
82	75.2	0.2	182	75.2	0.2	282	75.0	0.0
83	75.2	0.2	183	75.2	0.2	283	75.0	0.0
84	75.2	0.2	184	75.2	0.2	284	75.0	0.0
85	75.2	0.2	185	75.2	0.2	285	75.0	0.0
86	75.2	0.2	186	75.2	0.2	286	75.0	0.0
87	75.2	0.2	187	75.2	0.2	287	75.2	0.2
88	75.4	0.4	188	75.2	0.2	288	75.2	0.2
89	75.6	0.6	189	75.6	0.6	289	75.2	0.2
90	75.7	0.7	190	75.9	0.9	290	75.6	0.6
91	75.2	0.2	191	75.0	0.0	291	74.7	-0.3
92	75.2	0.2	192	74.8	-0.2	292	74.7	-0.3
93	75.2	0.2	193	74.8	-0.2	293	74.8	-0.2
94	75.2	0.2	194	74.8	-0.2	294	74.8	-0.2
95	75.2	0.2	195	75.0	0.0	295	75.0	0.0
96	75.2	0.2	196	75.0	0.0	296	75.0	0.0
97	75.4	0.4	197	75.2	0.2	297	75.2	0.2
98	75.6	0.6	198	75.2	0.2	298	75.2	0.2
99	75.4	0.4	199	75.2	0.2	299	75.4	0.4
100	75.6	0.6	200	75.6	0.6	300	75.7	0.7

Range for 75°F Signal: **+1.3/-0.3**

Allowable range: ±1.8

Within specification for this temperature? Yes

Performed by: Mark Day

Mgr. Fire Resistance — 4/11/05

Title — Date

Approved by:

President — 4/11/05

Title — Date

Channel Verification for Yokogawa 300 Channel

Serial No.: 48JF0082

Calibrator Used: SNT156701

Temperature Setting (°F): 150.0

Channel No.	Reading (°F)	+/-	Channel No.	Reading (°F)	+/-	Channel No.	Reading (°F)	+/-
1	150.6	0.6	101	150.1	0.1	201	150.1	0.1
2	150.3	0.3	102	150.1	0.1	202	150.1	0.1
3	150.3	0.3	103	150.3	0.3	203	150.1	0.1
4	150.3	0.3	104	150.3	0.3	204	150.3	0.3
5	150.4	0.4	105	150.3	0.3	205	150.3	0.3
6	150.4	0.4	106	150.3	0.3	206	150.3	0.3
7	150.6	0.6	107	150.3	0.3	207	150.3	0.3
8	150.6	0.6	108	150.3	0.3	208	150.4	0.4
9	150.8	0.8	109	150.4	0.4	209	150.6	0.6
10	151.0	1.0	110	150.8	0.8	210	150.8	0.8
11	150.1	0.1	111	150.1	0.1	211	149.5	-0.5
12	150.1	0.1	112	150.1	0.1	212	149.4	-0.6
13	150.1	0.1	113	150.1	0.1	213	149.5	-0.5
14	150.1	0.1	114	150.3	0.3	214	149.5	-0.5
15	150.1	0.1	115	150.3	0.3	215	149.5	-0.5
16	150.1	0.1	116	150.3	0.3	216	149.5	-0.5
17	150.1	0.1	117	150.3	0.3	217	149.7	-0.3
18	150.3	0.3	118	150.4	0.4	218	149.7	-0.3
19	150.3	0.3	119	150.6	0.6	219	149.9	-0.1
20	150.6	0.6	120	150.6	0.6	220	150.3	0.3
21	150.3	0.3	121	150.4	0.4	221	149.5	-0.5
22	150.3	0.3	122	150.3	0.3	222	149.7	-0.3
23	150.3	0.3	123	150.3	0.3	223	149.7	-0.3
24	150.3	0.3	124	150.3	0.3	224	149.7	-0.3
25	150.4	0.4	125	150.3	0.3	225	149.9	-0.1
26	150.6	0.6	126	150.3	0.3	226	150.1	0.1
27	150.6	0.6	127	150.3	0.3	227	150.1	0.1
28	150.8	0.8	128	150.3	0.3	228	150.3	0.3
29	150.8	0.8	129	150.6	0.6	229	150.3	0.3
30	151.0	1.0	130	150.8	0.8	230	150.4	0.4
31	150.4	0.4	131	149.7	-0.3	231	149.7	-0.3
32	150.3	0.3	132	149.7	-0.3	232	149.7	-0.3
33	150.3	0.3	133	149.7	-0.3	233	149.7	-0.3
34	150.3	0.3	134	149.7	-0.3	234	149.7	-0.3
35	150.3	0.3	135	149.7	-0.3	235	149.9	-0.1
36	150.3	0.3	136	149.7	-0.3	236	150.1	0.1
37	150.4	0.4	137	149.9	-0.1	237	150.1	0.1
38	150.4	0.4	138	150.1	0.1	238	150.3	0.3
39	150.6	0.6	139	150.3	0.3	239	150.3	0.3
40	150.8	0.8	140	150.3	0.3	240	150.6	0.6
41	149.9	-0.1	141	149.9	-0.1	241	150.3	0.3
42	149.9	-0.1	142	149.7	-0.3	242	150.3	0.3
43	150.1	0.1	143	149.9	-0.1	243	150.3	0.3
44	150.1	0.1	144	149.9	-0.1	244	150.3	0.3
45	150.3	0.3	145	149.9	-0.1	245	150.3	0.3
46	150.3	0.3	146	150.1	0.1	246	150.3	0.3
47	150.3	0.3	147	150.3	0.3	247	150.4	0.4
48	150.3	0.3	148	150.3	0.3	248	150.6	0.6
49	150.3	0.3	149	150.3	0.3	249	150.8	0.8
50	150.6	0.6	150	150.3	0.3	250	151.2	1.2
51	149.7	-0.3	151	150.3	0.3	251	150.1	0.1
52	149.7	-0.3	152	150.3	0.3	252	150.1	0.1
53	149.7	-0.3	153	150.1	0.1	253	149.9	-0.1
54	149.9	-0.1	154	150.1	0.1	254	150.1	0.1

55	150.1	0.1	155	150.3	0.3	255	150.1	0.1
56	150.1	0.1	156	150.3	0.3	256	150.1	0.1
57	150.1	0.1	157	150.3	0.3	257	150.3	0.3
58	150.3	0.3	158	150.3	0.3	258	150.3	0.3
59	150.3	0.3	159	150.4	0.4	259	150.3	0.3
60	150.6	0.6	160	150.8	0.8	260	150.8	0.8
61	150.3	0.3	161	150.3	0.3	261	150.1	0.1
62	150.3	0.3	162	150.1	0.1	262	150.1	0.1
63	150.3	0.3	163	150.3	0.3	263	150.1	0.1
64	150.3	0.3	164	150.3	0.3	264	150.3	0.3
65	150.3	0.3	165	150.3	0.3	265	150.1	0.1
66	150.3	0.3	166	150.3	0.3	266	150.3	0.3
67	150.3	0.3	167	150.3	0.3	267	150.3	0.3
68	150.4	0.4	168	150.3	0.3	268	150.4	0.4
69	150.6	0.6	169	150.4	0.4	269	150.4	0.4
70	150.8	0.8	170	150.8	0.8	270	150.8	0.8
71	150.3	0.3	171	149.7	-0.3	271	150.3	0.3
72	150.3	0.3	172	149.7	-0.3	272	150.1	0.1
73	150.3	0.3	173	149.9	-0.1	273	150.1	0.1
74	150.3	0.3	174	149.9	-0.1	274	150.3	0.3
75	150.1	0.1	175	149.9	-0.1	275	150.3	0.3
76	150.1	0.1	176	149.9	-0.1	276	150.3	0.3
77	150.3	0.3	177	149.9	-0.1	277	150.4	0.4
78	150.3	0.3	178	150.1	0.1	278	150.4	0.4
79	150.3	0.3	179	150.3	0.3	279	150.6	0.6
80	150.8	0.8	180	150.4	0.4	280	151.0	1.0
81	150.3	0.3	181	150.3	0.3	281	149.7	-0.3
82	150.3	0.3	182	150.3	0.3	282	149.7	-0.3
83	150.3	0.3	183	150.3	0.3	283	149.7	-0.3
84	150.3	0.3	184	150.3	0.3	284	149.7	-0.3
85	150.3	0.3	185	150.3	0.3	285	149.9	-0.1
86	150.3	0.3	186	150.3	0.3	286	149.9	-0.1
87	150.3	0.3	187	150.3	0.3	287	149.9	-0.1
88	150.4	0.4	188	150.6	0.6	288	150.1	0.1
89	150.4	0.4	189	150.6	0.6	289	150.3	0.3
90	150.6	0.6	190	150.8	0.8	290	150.4	0.4
91	150.1	0.1	191	149.9	-0.1	291	149.7	-0.3
92	150.1	0.1	192	149.9	-0.1	292	149.7	-0.3
93	150.1	0.1	193	149.9	-0.1	293	149.7	-0.3
94	150.1	0.1	194	149.9	-0.1	294	149.7	-0.3
95	150.3	0.3	195	150.1	0.1	295	149.9	-0.1
96	150.3	0.3	196	150.3	0.3	296	149.9	-0.1
97	150.3	0.3	197	150.3	0.3	297	150.3	0.3
98	150.3	0.3	198	150.3	0.3	298	150.3	0.3
99	150.3	0.3	199	150.3	0.3	299	150.3	0.3
100	150.4	0.4	200	150.6	0.6	300	150.4	0.4

Range for 150°F Signal: **+1.2/-0.6**

Allowable range: ±1.8

Within specification for this temperature? Yes

Performed by: Mike Day

Mgr. Fire Resistance 4/11/05

Title Date

Approved by:

President 4/11/05

Title Date

Channel Verification for Yokogawa 300 Channel

Serial No.: 48JF0082

Calibrator Used: SNT156701

Temperature Setting (°F): 300.0

Channel No.	Reading (°F)	+/-	Channel No.	Reading (°F)	+/-	Channel No.	Reading (°F)	+/-
1	300.4	0.4	101	299.8	-0.2	201	299.8	-0.2
2	300.2	0.2	102	299.8	-0.2	202	300.0	0.0
3	300.2	0.2	103	300.0	0.0	203	299.8	-0.2
4	300.2	0.2	104	300.0	0.0	204	300.0	0.0
5	300.2	0.2	105	300.0	0.0	205	300.0	0.0
6	300.2	0.2	106	300.2	0.2	206	300.2	0.2
7	300.2	0.2	107	300.2	0.2	207	300.2	0.2
8	300.4	0.4	108	300.2	0.2	208	300.2	0.2
9	300.6	0.6	109	300.4	0.4	209	300.6	0.6
10	300.7	0.7	110	300.6	0.6	210	300.7	0.7
11	300.0	0.0	111	299.8	-0.2	211	299.5	-0.5
12	299.8	-0.2	112	299.7	-0.3	212	299.5	-0.5
13	299.8	-0.2	113	299.8	-0.2	213	299.5	-0.5
14	300.0	0.0	114	299.8	-0.2	214	299.8	-0.2
15	300.0	0.0	115	300.0	0.0	215	299.8	-0.2
16	300.0	0.0	116	300.0	0.0	216	300.0	0.0
17	300.0	0.0	117	300.2	0.2	217	300.9	0.9
18	300.2	0.2	118	300.2	0.2	218	300.9	0.9
19	300.2	0.2	119	300.4	0.4	219	300.2	0.2
20	300.4	0.4	120	300.7	0.7	220	300.2	0.2
21	300.2	0.2	121	300.4	0.4	221	299.5	-0.5
22	300.2	0.2	122	300.2	0.2	222	299.5	-0.5
23	300.2	0.2	123	300.2	0.2	223	299.5	-0.5
24	300.2	0.2	124	300.2	0.2	224	299.5	-0.5
25	300.2	0.2	125	300.2	0.2	225	299.8	-0.2
26	300.4	0.4	126	300.2	0.2	226	299.8	-0.2
27	300.4	0.4	127	300.4	0.4	227	299.8	-0.2
28	300.6	0.6	128	300.4	0.4	228	300.0	0.0
29	300.6	0.6	129	300.6	0.6	229	300.2	0.2
30	300.9	0.9	130	300.7	0.7	230	300.4	0.4
31	300.4	0.4	131	299.8	-0.2	231	299.7	-0.3
32	300.4	0.4	132	299.7	-0.3	232	299.7	-0.3
33	300.2	0.2	133	299.7	-0.3	233	299.7	-0.3
34	300.4	0.4	134	299.7	-0.3	234	299.7	-0.3
35	300.4	0.4	135	299.7	-0.3	235	299.8	-0.2
36	300.4	0.4	136	299.7	-0.3	236	299.8	-0.2
37	300.6	0.6	137	299.8	-0.2	237	300.0	0.0
38	300.7	0.7	138	300.0	0.0	238	300.2	0.2
39	300.7	0.7	139	300.2	0.2	239	300.2	0.2
40	301.1	1.1	140	300.6	0.6	240	300.4	0.4
41	300.0	0.0	141	299.8	-0.2	241	300.2	0.2
42	300.0	0.0	142	299.7	-0.3	242	300.2	0.2
43	300.0	0.0	143	299.8	-0.2	243	300.2	0.2
44	299.8	-0.2	144	299.8	-0.2	244	300.2	0.2
45	300.0	0.0	145	299.8	-0.2	245	300.2	0.2
46	300.0	0.0	146	299.8	-0.2	246	300.2	0.2
47	300.0	0.0	147	300.0	0.0	247	300.6	0.6
48	300.2	0.2	148	300.0	0.0	248	300.6	0.6
49	300.2	0.2	149	300.2	0.2	249	300.6	0.6
50	300.4	0.4	150	300.4	0.4	250	300.9	0.9
51	299.8	-0.2	151	300.2	0.2	251	299.8	-0.2
52	300.0	0.0	152	300.0	0.0	252	299.8	-0.2
53	300.2	0.2	153	300.0	0.0	253	300.0	0.0
54	300.2	0.2	154	300.0	0.0	254	299.8	-0.2
55	300.2	0.2	155	300.0	0.0	255	300.0	0.0
56	300.2	0.2	156	300.2	0.2	256	300.0	0.0

57	300.4	0.4	157	300.2	0.2	257	300.2	0.2
58	300.4	0.4	158	300.2	0.2	258	300.2	0.2
59	300.4	0.4	159	300.4	0.4	259	300.4	0.4
60	300.6	0.6	160	300.7	0.7	260	300.7	0.7
61	300.2	0.2	161	300.2	0.2	261	299.7	-0.3
62	300.2	0.2	162	300.2	0.2	262	299.8	-0.2
63	300.0	0.0	163	300.2	0.2	263	299.8	-0.2
64	300.2	0.2	164	300.2	0.2	264	299.8	-0.2
65	300.2	0.2	165	300.2	0.2	265	299.8	-0.2
66	300.2	0.2	166	300.2	0.2	266	300.0	0.0
67	300.2	0.2	167	300.2	0.2	267	300.0	0.0
68	300.2	0.2	168	300.2	0.2	268	300.2	0.2
69	300.6	0.6	169	300.2	0.2	269	300.6	0.6
70	300.7	0.7	170	300.7	0.7	270	300.7	0.7
71	300.2	0.2	171	299.5	-0.5	271	300.0	0.0
72	300.2	0.2	172	299.5	-0.5	272	300.0	0.0
73	300.2	0.2	173	299.7	-0.3	273	300.0	0.0
74	300.2	0.2	174	299.7	-0.3	274	300.2	0.2
75	300.2	0.2	175	299.7	-0.3	275	300.2	0.2
76	300.2	0.2	176	299.7	-0.3	276	300.2	0.2
77	300.2	0.2	177	299.8	-0.2	277	300.2	0.2
78	300.2	0.2	178	299.8	-0.2	278	300.2	0.2
79	300.4	0.4	179	300.2	0.2	279	300.6	0.6
80	300.6	0.6	180	300.4	0.4	280	300.7	0.7
81	300.2	0.2	181	300.2	0.2	281	299.5	-0.5
82	300.0	0.0	182	300.2	0.2	282	299.5	-0.5
83	300.0	0.0	183	300.2	0.2	283	299.5	-0.5
84	300.0	0.0	184	300.2	0.2	284	299.5	-0.5
85	300.2	0.2	185	300.2	0.2	285	299.5	-0.5
86	300.2	0.2	186	300.2	0.2	286	299.7	-0.3
87	300.2	0.2	187	300.2	0.2	287	299.8	-0.2
88	300.2	0.2	188	300.4	0.4	288	300.0	0.0
89	300.6	0.6	189	300.6	0.6	289	300.2	0.2
90	300.7	0.7	190	300.7	0.7	290	300.6	0.6
91	300.0	0.0	191	299.8	-0.2	291	299.5	-0.5
92	299.8	-0.2	192	299.8	-0.2	292	299.5	-0.5
93	300.0	0.0	193	299.8	-0.2	293	299.5	-0.5
94	299.8	-0.2	194	299.8	-0.2	294	299.7	-0.3
95	300.0	0.0	195	299.8	-0.2	295	299.7	-0.3
96	300.0	0.0	196	300.0	0.0	296	299.7	-0.3
97	300.0	0.0	197	300.0	0.0	297	299.8	-0.2
98	300.2	0.2	198	300.2	0.2	298	300.0	0.0
99	300.4	0.4	199	300.2	0.2	299	300.2	0.2
100	300.6	0.6	200	300.7	0.7	300	300.6	0.6

Range for 300°F Signal: **+1.1/-0.5**

Allowable range ±1.9

Within specification for this temperature? Yes

Performed by: Mike Day

Mgr. Fire Resistance — 4/11/05 — MD

Title — Date

Approved by:

President — 4/11/05

Title — Date

Channel Verification for Yokogawa 300 Channel

Serial No.: 48JF0082

Calibrator Used: SNT156701

Temperature Setting (°F): 400.0

Channel No.	Reading (°F)	+/-	Channel No.	Reading (°F)	+/-	Channel No.	Reading (°F)	+/-
1	400.3	0.3	101	400.1	0.1	201	400.1	0.1
2	400.3	0.3	102	399.9	-0.1	202	400.1	0.1
3	400.1	0.1	103	400.1	0.1	203	400.1	0.1
4	400.3	0.3	104	400.1	0.1	204	400.3	0.3
5	400.3	0.3	105	400.1	0.1	205	400.3	0.3
6	400.3	0.3	106	400.1	0.1	206	400.3	0.3
7	400.3	0.3	107	400.3	0.3	207	400.3	0.3
8	400.5	0.5	108	400.3	0.3	208	400.5	0.5
9	400.6	0.6	109	400.3	0.3	209	400.6	0.6
10	400.8	0.8	110	400.6	0.6	210	400.8	0.8
11	400.1	0.1	111	399.7	-0.3	211	399.7	-0.3
12	400.1	0.1	112	399.9	-0.1	212	399.7	-0.3
13	400.1	0.1	113	399.9	-0.1	213	399.7	-0.3
14	400.1	0.1	114	400.1	0.1	214	399.7	-0.3
15	400.1	0.1	115	400.1	0.1	215	399.7	-0.3
16	400.1	0.1	116	400.1	0.1	216	399.9	-0.1
17	400.3	0.3	117	400.3	0.3	217	400.1	0.1
18	400.3	0.3	118	400.3	0.3	218	400.1	0.1
19	400.5	0.5	119	400.3	0.3	219	400.3	0.3
20	400.6	0.6	120	400.6	0.6	220	400.5	0.5
21	400.3	0.3	121	400.5	0.5	221	399.6	-0.4
22	400.3	0.3	122	400.3	0.3	222	399.6	-0.4
23	400.3	0.3	123	400.3	0.3	223	399.6	-0.4
24	400.3	0.3	124	400.3	0.3	224	399.7	-0.3
25	400.3	0.3	125	400.3	0.3	225	399.9	-0.1
26	400.3	0.3	126	400.3	0.3	226	399.9	-0.1
27	400.3	0.3	127	400.3	0.3	227	400.3	0.3
28	400.3	0.3	128	400.5	0.5	228	400.1	0.1
29	400.6	0.6	129	400.6	0.6	229	400.3	0.3
30	400.8	0.8	130	400.8	0.8	230	400.6	0.6
31	400.3	0.3	131	399.9	-0.1	231	399.7	-0.3
32	400.3	0.3	132	399.9	-0.1	232	399.7	-0.3
33	400.3	0.3	133	399.7	-0.3	233	399.7	-0.3
34	400.3	0.3	134	399.9	-0.1	234	399.7	-0.3
35	400.3	0.3	135	399.9	-0.1	235	399.9	-0.1
36	400.3	0.3	136	399.9	-0.1	236	399.9	-0.1
37	400.3	0.3	137	399.9	-0.1	237	399.9	-0.1
38	400.5	0.5	138	400.1	0.1	238	400.1	0.1
39	400.5	0.5	139	400.3	0.3	239	400.3	0.3
40	400.8	0.8	140	400.5	0.5	240	400.5	0.5
41	399.9	-0.1	141	399.7	-0.3	241	400.3	0.3
42	399.9	-0.1	142	399.7	-0.3	242	400.3	0.3
43	399.9	-0.1	143	399.7	-0.3	243	400.3	0.3
44	399.9	-0.1	144	399.9	-0.1	244	400.3	0.3
45	400.1	0.1	145	399.9	-0.1	245	400.3	0.3
46	400.3	0.3	146	399.9	-0.1	246	400.5	0.5
47	400.3	0.3	147	400.1	0.1	247	400.5	0.5
48	400.3	0.3	148	400.3	0.3	248	400.8	0.8
49	400.3	0.3	149	400.1	0.1	249	400.8	0.8
50	400.6	0.6	150	400.3	0.3	250	401.2	1.2
51	399.7	-0.3	151	400.1	0.1	251	399.9	-0.1
52	399.9	-0.1	152	400.1	0.1	252	399.7	-0.3
53	400.1	0.1	153	400.3	0.3	253	399.9	-0.1
54	400.1	0.1	154	400.1	0.1	254	399.9	-0.1

55	400.1	0.1	155	400.3	0.3	255	400.1	0.1
56	400.3	0.3	156	400.3	0.3	256	399.9	-0.1
57	400.3	0.3	157	400.3	0.3	257	400.1	0.1
58	400.3	0.3	158	400.5	0.5	258	400.3	0.3
59	400.3	0.3	159	400.5	0.5	259	400.3	0.3
60	400.6	0.6	160	400.8	0.8	260	400.5	0.5
61	400.3	0.3	161	400.1	0.1	261	399.9	-0.1
62	400.3	0.3	162	399.9	-0.1	262	399.9	-0.1
63	400.3	0.3	163	399.9	-0.1	263	399.9	-0.1
64	400.1	0.1	164	400.1	0.1	264	399.9	-0.1
65	400.1	0.1	165	400.3	0.3	265	400.1	0.1
66	400.3	0.3	166	400.3	0.3	266	400.1	0.1
67	400.3	0.3	167	400.3	0.3	267	400.3	0.3
68	400.5	0.5	168	400.5	0.5	268	400.3	0.3
69	400.5	0.5	169	400.6	0.6	269	400.3	0.3
70	401.0	1.0	170	400.8	0.8	270	400.6	0.6
71	400.3	0.3	171	399.7	-0.3	271	399.9	-0.1
72	400.3	0.3	172	399.7	-0.3	272	399.7	-0.3
73	400.3	0.3	173	399.7	-0.3	273	399.9	-0.1
74	400.3	0.3	174	399.7	-0.3	274	399.7	-0.3
75	400.3	0.3	175	399.7	-0.3	275	400.3	0.3
76	400.1	0.1	176	399.9	-0.1	276	400.3	0.3
77	400.1	0.1	177	399.9	-0.1	277	400.3	0.3
78	400.3	0.3	178	400.3	0.3	278	400.3	0.3
79	400.5	0.5	179	400.3	0.3	279	400.5	0.5
80	400.6	0.6	180	400.5	0.5	280	400.8	0.8
81	400.3	0.3	181	400.5	0.5	281	399.6	-0.4
82	400.3	0.3	182	400.3	0.3	282	399.6	-0.4
83	400.1	0.1	183	400.3	0.3	283	399.7	-0.3
84	400.1	0.1	184	400.3	0.3	284	399.7	-0.3
85	400.3	0.3	185	400.3	0.3	285	399.7	-0.3
86	400.3	0.3	186	400.5	0.5	286	399.7	-0.3
87	400.3	0.3	187	400.5	0.5	287	399.9	-0.1
88	400.3	0.3	188	400.5	0.5	288	400.1	0.1
89	400.3	0.3	189	400.6	0.6	289	400.1	0.1
90	400.6	0.6	190	401.2	1.2	290	400.5	0.5
91	400.1	0.1	191	400.1	0.1	291	399.6	-0.4
92	400.1	0.1	192	400.1	0.1	292	399.6	-0.4
93	400.1	0.1	193	400.1	0.1	293	399.6	-0.4
94	400.1	0.1	194	400.1	0.1	294	399.6	-0.4
95	400.1	0.1	195	400.1	0.1	295	399.7	-0.3
96	400.3	0.3	196	400.3	0.3	296	399.9	-0.1
97	400.3	0.3	197	400.3	0.3	297	400.1	0.1
98	400.3	0.3	198	400.3	0.3	298	400.1	0.1
99	400.5	0.5	199	400.3	0.3	299	400.1	0.1
100	400.6	0.6	200	400.5	0.5	300	400.3	0.3

Range for 400°F Signal: **+1.2/-0.4**

Allowable range: ±2.0

Within specification for this temperature? Yes

Performed by: Mike Day

Mgr. Fire Resistance — 4/11/05

Title — Date

Approved by:

President — 4/11/05

Title — Date

Channel Verification for Yokogawa 300 Channel

Serial No.: 48JF0082

Calibrator Used: SNT156701

Temperature Setting (°F): 1000.0

Channel No.	Reading (°F)	+/-	Channel No.	Reading (°F)	+/-	Channel No.	Reading (°F)	+/-
1	1000.2	0.2	101	1000.2	0.2	201	1000.2	0.2
2	1000.0	0.0	102	1000.2	0.2	202	1000.2	0.2
3	1000.0	0.0	103	1000.2	0.2	203	1000.2	0.2
4	1000.0	0.0	104	1000.2	0.2	204	1000.4	0.4
5	1000.0	0.0	105	1000.2	0.2	205	1000.4	0.4
6	1000.0	0.0	106	1000.2	0.2	206	1000.6	0.6
7	1000.0	0.0	107	1000.4	0.4	207	1000.6	0.6
8	1000.2	0.2	108	1000.4	0.4	208	1000.8	0.8
9	1000.2	0.2	109	1000.6	0.6	209	1000.8	0.8
10	1000.6	0.6	110	1000.9	0.9	210	1001.1	1.1
11	999.9	-0.1	111	1000.0	0.0	211	1000.0	0.0
12	999.9	-0.1	112	1000.2	0.2	212	1000.0	0.0
13	999.9	-0.1	113	1000.2	0.2	213	999.9	-0.1
14	999.9	-0.1	114	1000.4	0.4	214	1000.0	0.0
15	1000.0	0.0	115	1000.6	0.6	215	1000.0	0.0
16	1000.0	0.0	116	1000.4	0.4	216	1000.0	0.0
17	1000.0	0.0	117	1000.6	0.6	217	1000.0	0.0
18	1000.0	0.0	118	1000.6	0.6	218	1000.0	0.0
19	1000.2	0.2	119	1000.6	0.6	219	1000.2	0.2
20	1000.4	0.4	120	1000.6	0.6	220	1000.6	0.6
21	1000.0	0.0	121	1000.2	0.2	221	999.9	-0.1
22	1000.0	0.0	122	1000.0	0.0	222	999.9	-0.1
23	1000.0	0.0	123	1000.0	0.0	223	1000.0	0.0
24	1000.0	0.0	124	1000.0	0.0	224	1000.0	0.0
25	1000.0	0.0	125	1000.0	0.0	225	1000.0	0.0
26	1000.2	0.2	126	1000.0	0.0	226	1000.0	0.0
27	1000.2	0.2	127	1000.0	0.0	227	1000.2	0.2
28	1000.2	0.2	128	1000.0	0.0	228	1000.2	0.2
29	1000.6	0.6	129	1000.6	0.6	229	1000.4	0.4
30	1000.6	0.6	130	1000.9	0.9	230	1000.6	0.6
31	1000.6	0.6	131	1000.0	0.0	231	1000.0	0.0
32	1000.6	0.6	132	999.9	-0.1	232	1000.0	0.0
33	1000.4	0.4	133	999.9	-0.1	233	1000.0	0.0
34	1000.4	0.4	134	1000.0	0.0	234	1000.0	0.0
35	1000.6	0.6	135	1000.0	0.0	235	1000.0	0.0
36	1000.6	0.6	136	999.9	-0.1	236	1000.0	0.0
37	1000.6	0.6	137	1000.0	0.0	237	1000.2	0.2
38	1000.6	0.6	138	1000.0	0.0	238	1000.2	0.2
39	1000.6	0.6	139	1000.0	0.0	239	1000.2	0.2
40	1000.8	0.8	140	1000.2	0.2	240	1000.6	0.6
41	1000.0	0.0	141	999.9	-0.1	241	1000.2	0.2
42	1000.0	0.0	142	999.9	-0.1	242	1000.0	0.0
43	1000.0	0.0	143	1000.0	0.0	243	1000.0	0.0
44	1000.0	0.0	144	1000.0	0.0	244	1000.0	0.0
45	1000.2	0.2	145	1000.0	0.0	245	1000.0	0.0
46	1000.2	0.2	146	1000.0	0.0	246	1000.0	0.0
47	1000.4	0.4	147	1000.2	0.2	247	1000.4	0.4
48	1000.2	0.2	148	1000.2	0.2	248	1000.6	0.6
49	1000.2	0.2	149	1000.0	0.0	249	1000.8	0.8
50	1000.4	0.4	150	1000.2	0.2	250	1000.9	0.9
51	999.9	-0.1	151	1000.0	0.0	251	1000.0	0.0
52	999.9	-0.1	152	1000.0	0.0	252	1000.0	0.0
53	1000.0	0.0	153	1000.0	0.0	253	1000.0	0.0
54	1000.0	0.0	154	1000.0	0.0	254	1000.0	0.0
55	1000.0	0.0	155	1000.0	0.0	255	1000.0	0.0
56	1000.0	0.0	156	1000.0	0.0	256	1000.0	0.0

57	1000.0	0.0	157	1000.2	0.2	257	1000.2	0.2
58	1000.0	0.0	158	1000.4	0.4	258	1000.2	0.2
59	1000.0	0.0	159	1000.6	0.6	259	1000.4	0.4
60	1000.6	0.6	160	1000.9	0.9	260	1000.8	0.8
61	1000.0	0.0	161	1000.2	0.2	261	1000.0	0.0
62	1000.0	0.0	162	1000.0	0.0	262	1000.0	0.0
63	1000.0	0.0	163	1000.2	0.2	263	1000.0	0.0
64	1000.0	0.0	164	1000.2	0.2	264	1000.0	0.0
65	1000.2	0.2	165	1000.2	0.2	265	1000.0	0.0
66	1000.2	0.2	166	1000.2	0.2	266	1000.0	0.0
67	1000.4	0.4	167	1000.4	0.4	267	1000.0	0.0
68	1000.4	0.4	168	1000.4	0.4	268	1000.2	0.2
69	1000.6	0.6	169	1000.6	0.6	269	1000.4	0.4
70	1000.8	0.8	170	1000.8	0.8	270	1000.8	0.8
71	1000.0	0.0	171	999.7	-0.3	271	1000.0	0.0
72	1000.0	0.0	172	999.7	-0.3	272	999.9	-0.1
73	1000.0	0.0	173	999.7	-0.3	273	1000.0	0.0
74	1000.0	0.0	174	999.9	-0.1	274	1000.0	0.0
75	1000.4	0.4	175	999.9	-0.1	275	1000.0	0.0
76	1000.6	0.6	176	999.9	-0.1	276	1000.2	0.2
77	1000.6	0.6	177	1000.0	0.0	277	1000.2	0.2
78	1000.6	0.6	178	1000.0	0.0	278	1000.2	0.2
79	1000.8	0.8	179	1000.2	0.2	279	1000.4	0.4
80	1000.9	0.9	180	1000.4	0.4	280	1000.6	0.6
81	1000.4	0.4	181	1000.6	0.6	281	999.5	-0.5
82	1000.2	0.2	182	1000.6	0.6	282	999.5	-0.5
83	1000.2	0.2	183	1000.6	0.6	283	999.7	-0.3
84	1000.2	0.2	184	1000.6	0.6	284	999.5	-0.5
85	1000.4	0.4	185	1000.6	0.6	285	999.7	-0.3
86	1000.2	0.2	186	1000.6	0.6	286	999.7	-0.3
87	1000.4	0.4	187	1000.8	0.8	287	999.9	-0.1
88	1000.4	0.4	188	1000.8	0.8	288	999.9	-0.1
89	1000.6	0.6	189	1000.9	0.9	289	1000.0	0.0
90	1000.9	0.9	190	1001.3	1.3	290	1000.4	0.4
91	1000.4	0.4	191	1000.2	0.2	291	999.5	-0.5
92	1000.2	0.2	192	1000.0	0.0	292	999.5	-0.5
93	1000.4	0.4	193	1000.2	0.2	293	999.7	-0.3
94	1000.4	0.4	194	1000.2	0.2	294	999.7	-0.3
95	1000.4	0.4	195	1000.4	0.4	295	999.7	-0.3
96	1000.6	0.6	196	1000.4	0.4	296	999.7	-0.3
97	1000.6	0.6	197	1000.6	0.6	297	999.9	-0.1
98	1000.6	0.6	198	1000.6	0.6	298	1000.0	0.0
99	1000.6	0.6	199	1000.6	0.6	299	1000.0	0.0
100	1000.6	0.6	200	1000.9	0.9	300	1000.2	0.2

Range for 1000°F Signal: **+1.3/-0.5**

Allowable range: ±2.3

Within specification for this temperature? Yes

Performed by: Mike Day

Mgr. Fire Resistance — 4/11/05

Title — Date

Approved by:

President — 4/11/05

Title — Date

Channel Verification for Yokogawa 300 Channel

Serial No.: 48JF0082

Calibrator Used: SNT156701

Temperature Setting (°F): 2000.0

Channel No.	Reading (°F)	+/-	Channel No.	Reading (°F)	+/-	Channel No.	Reading (°F)	+/-
1	2000.1	0.1	101	1998.5	-1.5	201	2001.0	1.0
2	1999.9	-0.1	102	2002.1	2.1	202	2001.0	1.0
3	1999.9	-0.1	103	1998.5	-1.5	203	2001.0	1.0
4	1999.9	-0.1	104	1999.9	-0.1	204	2001.0	1.0
5	1999.9	-0.1	105	2000.3	0.3	205	2001.0	1.0
6	2000.1	0.1	106	2000.5	0.5	206	2001.0	1.0
7	2000.1	0.1	107	2000.7	0.7	207	2001.0	1.0
8	2000.1	0.1	108	2000.7	0.7	208	2001.0	1.0
9	2000.1	0.1	109	2000.8	0.8	209	2001.4	1.4
10	2000.7	0.7	110	2001.0	1.0	210	2001.7	1.7
11	1999.6	-0.4	111	2000.5	0.5	211	2000.3	0.3
12	1999.6	-0.4	112	2000.5	0.5	212	2000.3	0.3
13	1999.6	-0.4	113	2000.5	0.5	213	2000.3	0.3
14	1999.6	-0.4	114	2000.7	0.7	214	2000.5	0.5
15	1999.8	-0.2	115	2000.7	0.7	215	2000.5	0.5
16	1999.8	-0.2	116	2000.7	0.7	216	2000.7	0.7
17	1999.8	-0.2	117	2000.7	0.7	217	2000.7	0.7
18	1999.9	-0.1	118	2000.7	0.7	218	2000.7	0.7
19	1999.9	-0.1	119	2000.8	0.8	219	2001.0	1.0
20	2000.3	0.3	120	2001.0	1.0	220	2001.0	1.0
21	1999.9	-0.1	121	2000.7	0.7	221	2000.3	0.3
22	1999.8	-0.2	122	2000.3	0.3	222	2000.3	0.3
23	1999.9	-0.1	123	2000.3	0.3	223	2000.5	0.5
24	1999.9	-0.1	124	2000.5	0.5	224	2000.5	0.5
25	1999.6	-0.4	125	2000.8	0.8	225	2000.5	0.5
26	1999.8	-0.2	126	1999.9	-0.1	226	2000.5	0.5
27	1999.8	-0.2	127	2000.7	0.7	227	2000.7	0.7
28	1999.9	-0.1	128	2000.3	0.3	228	2000.7	0.7
29	1999.9	-0.1	129	2001.7	1.7	229	2000.8	0.8
30	2000.3	0.3	130	1999.6	-0.4	230	2001.0	1.0
31	2000.5	0.5	131	2001.0	1.0	231	2000.5	0.5
32	2000.5	0.5	132	2001.0	1.0	232	2000.5	0.5
33	2000.7	0.7	133	1999.4	-0.6	233	2000.3	0.3
34	2000.7	0.7	134	1999.9	-0.1	234	2000.5	0.5
35	2000.7	0.7	135	1999.9	-0.1	235	2000.5	0.5
36	2000.7	0.7	136	1999.9	-0.1	236	2000.5	0.5
37	2000.7	0.7	137	1999.9	-0.1	237	2000.7	0.7
38	2000.7	0.7	138	2000.1	0.1	238	2000.7	0.7
39	2000.7	0.7	139	2001.7	1.7	239	2000.8	0.8
40	2001.0	1.0	140	2000.7	0.7	240	2001.0	1.0
41	2000.1	0.1	141	1999.9	-0.1	241	2000.1	0.1
42	2000.1	0.1	142	1999.9	-0.1	242	1999.9	-0.1
43	2000.1	0.1	143	1999.9	-0.1	243	1999.9	-0.1
44	2000.1	0.1	144	1999.9	-0.1	244	1999.9	-0.1
45	2000.3	0.3	145	1999.9	-0.1	245	2000.1	0.1
46	2000.1	0.1	146	1999.9	-0.1	246	2000.3	0.3
47	2000.1	0.1	147	2002.6	2.6	247	2000.5	0.5
48	2000.5	0.5	148	2000.3	0.3	248	2000.7	0.7
49	2000.7	0.7	149	1999.9	-0.1	249	2001.0	1.0
50	2000.8	0.8	150	2000.5	0.5	250	2001.2	1.2
51	1999.8	-0.2	151	2000.3	0.3	251	1999.9	-0.1
52	1999.9	-0.1	152	2000.3	0.3	252	1999.9	-0.1
53	1999.9	-0.1	153	2000.1	0.1	253	1999.9	-0.1
54	1999.9	-0.1	154	2000.1	0.1	254	1999.9	-0.1
55	1999.9	-0.1	155	2000.1	0.1	255	2000.3	0.3
56	1999.9	-0.1	156	2000.3	0.3	256	2000.3	0.3

57	1999.9	-0.1	157	2000.5	0.5	257	2000.3	0.3
58	2000.1	0.1	158	2000.3	0.3	258	2000.3	0.3
59	2000.3	0.3	159	2000.7	0.7	259	2000.5	0.5
60	2000.5	0.5	160	2000.8	0.8	260	2000.7	0.7
61	2000.7	0.7	161	2000.3	0.3	261	1999.9	-0.1
62	2000.7	0.7	162	2000.3	0.3	262	1999.9	-0.1
63	2000.7	0.7	163	2000.3	0.3	263	1999.9	-0.1
64	2000.7	0.7	164	2000.5	0.5	264	2000.1	0.1
65	2000.7	0.7	165	2000.5	0.5	265	2000.1	0.1
66	2000.8	0.8	166	2000.5	0.5	266	2000.3	0.3
67	2000.8	0.8	167	2000.5	0.5	267	2000.3	0.3
68	2001.0	1.0	168	2000.5	0.5	268	2000.5	0.5
69	2001.0	1.0	169	2000.7	0.7	269	2000.7	0.7
70	2001.2	1.2	170	2000.8	0.8	270	2001.0	1.0
71	2000.7	0.7	171	1999.6	-0.4	271	1999.8	-0.2
72	2000.7	0.7	172	1999.8	-0.2	272	1999.9	-0.1
73	2000.7	0.7	173	1999.9	-0.1	273	1999.9	-0.1
74	2000.7	0.7	174	1999.9	-0.1	274	1999.9	-0.1
75	2000.5	0.5	175	1999.9	-0.1	275	1999.9	-0.1
76	2000.3	0.3	176	1999.8	-0.2	276	1999.9	-0.1
77	2000.5	0.5	177	1999.9	-0.1	277	1999.9	-0.1
78	2000.5	0.5	178	1999.9	-0.1	278	1999.9	-0.1
79	2000.7	0.7	179	2000.1	0.1	279	2000.1	0.1
80	2000.8	0.8	180	2000.5	0.5	280	2000.5	0.5
81	2000.3	0.3	181	2001.0	1.0	281	1999.2	-0.8
82	2000.3	0.3	182	2001.0	1.0	282	1999.2	-0.8
83	2000.5	0.5	183	2001.0	1.0	283	1999.4	-0.6
84	2000.5	0.5	184	2001.0	1.0	284	1999.4	-0.6
85	2000.5	0.5	185	2001.0	1.0	285	1999.6	-0.4
86	2000.5	0.5	186	2001.2	1.2	286	1999.8	-0.2
87	2000.7	0.7	187	2001.2	1.2	287	1999.8	-0.2
88	2000.5	0.5	188	2001.4	1.4	288	1999.8	-0.2
89	2000.7	0.7	189	2001.6	1.6	289	1999.9	-0.1
90	2000.8	0.8	190	2001.9	1.9	290	2000.1	0.1
91	2000.7	0.7	191	2000.8	0.8	291	1999.2	-0.8
92	2000.5	0.5	192	2000.7	0.7	292	1999.2	-0.8
93	2000.7	0.7	193	2000.7	0.7	293	1999.2	-0.8
94	2000.7	0.7	194	2000.7	0.7	294	1999.2	-0.8
95	2000.7	0.7	195	2000.7	0.7	295	1999.4	-0.6
96	2000.7	0.7	196	2000.8	0.8	296	1999.6	-0.4
97	2000.7	0.7	197	2000.8	0.8	297	1999.8	-0.2
98	2000.7	0.7	198	2001.0	1.0	298	1999.9	-0.1
99	2001.0	1.0	199	2001.0	1.0	299	1999.9	-0.1
100	2001.2	1.2	200	2001.4	1.4	300	2000.1	0.1

Range for 2000°F Signal: **+2.6/-1.5**

Allowable range: ±2.8

Within specification for this temperature? Yes

Performed by: Mike Day

Mgr. Fire Resistance — 4/11/05 — MD

Title — Date

Approved by: [signature]

President — 4/11/05

Title — Date

Omega Point Laboratories, Inc.
16015 Shady Falls Road
Elmendorf, Texas 78112
800-966-5253 FAX 210-635-8101

Certificate of Verification

Certification No.: 92150

Verification Date: 04/11/2005

Reverification Date: 010/11/2005

Manufacturer: Yokogawa

Model No.: 100 Channel DAU

Serial No.: 99LE004

Equipment Description: 100 Channel Data Acquisition System with YOKOGAWA Darwin Series

Verification Sources: TEGAM Model 840-A, SN: T-156701
Calibration due 07/26/2005

PERFORMANCE:

Temperature: (75°F) +0.9/-0.2	Temperature: (150°F) +1/-0.1	Temperature: (300°F) +0.9/-0	Temperature: (400°F) +0.8/-0.1	Temperature: (1000°F) +0.8/-0.1	Temperature: (2000°F) +0.8/-0.1

Verification Performed by:

Mike Dey
Manager of Fire Resistance

Verification Approved by:

Deg Priest
President/Chief Technical Officer

Channel Verification for Yokogawa 100 Channel

Serial No.: 99-LE-004

Calibrator Used: SNT156701

Temperature Setting (°F): 75.0

Within specs? Yes/No

Performed by: Mike Dey MD

Title: Mgr. Dept. 2

Approved by:

Title: President

Date: 4/11/05

Channel No.	Reading (°F)	+/-	Channel No.	Reading (°F)	+/-
1	75.7	0.7			
2	75.6	0.6			
3	75.4	0.4			
4	75.6	0.6			
5	75.7	0.7			
6	75.4	0.4			
7	75.6	0.6			
8	75.7	0.7			
9	75.7	0.7			
10	75.9	0.9			
11	75.2	0.2			
12	75.2	0.2			
13	75.2	0.2			
14	75.2	0.2			
15	75.2	0.2			
16	75.2	0.2			
17	75.2	0.2			
18	75.2	0.2			
19	75.2	0.2			
20	75.6	0.6			

Range of 75°F Readings: +0.9/0.2

	Lower	Upper	
Allowable limits	73.2	76.8	(±1.8)

Channel Verification for Yokogawa 100 Channel

Serial No.: 99-LE-004

Calibrator Used: SNT156701

Temperature Setting (°F): 150.0

Within specs? Yes/No

Performed by: Mike Dey

Title: Mgr. Dept. 2

Approved by:

Title: President

Date: 4/11/05

Channel No.	Reading (°F)	+/-	Channel No.	Reading (°F)	+/-
1	150.8	0.8			
2	150.4	0.4			
3	150.3	0.3			
4	150.4	0.4			
5	150.4	0.4			
6	150.4	0.4			
7	150.4	0.4			
8	150.6	0.6			
9	150.6	0.6			
10	151.0	1.0			
11	150.3	0.3			
12	150.1	0.1			
13	149.9	-0.1			
14	150.1	0.1			
15	150.1	0.1			
16	150.1	0.1			
17	150.1	0.1			
18	150.1	0.1			
19	150.3	0.3			
20	150.6	0.6			

Range of 150°F Readings: **+1/-0.1**

	Lower	Upper	
Allowable limits	148.2	151.8	(±1.8)

Channel Verification for Yokogawa 100 Channel

Serial No.: 99-LE-004

Calibrator Used: SNT156701

Temperature Setting (°F): 300.0

Within specs? Yes/No

Performed by: Mike Dey MD

Title: Mgr. Dept. 2

Approved by:

Title: President

Date: 4/11/05

Channel No.	Reading (°F)	+/-	Channel No.	Reading (°F)	+/-
1	300.7	0.7			
2	300.6	0.6			
3	300.6	0.6			
4	300.6	0.6			
5	300.6	0.6			
6	300.6	0.6			
7	300.7	0.7			
8	300.6	0.6			
9	300.7	0.7			
10	300.9	0.9			
11	300.2	0.2			
12	300.0	0.0			
13	300.0	0.0			
14	300.0	0.0			
15	300.0	0.0			
16	300.0	0.0			
17	300.2	0.2			
18	300.0	0.0			
19	300.2	0.2			
20	300.7	0.7			

Range of 300°F Readings: +0.9/0

	Lower	Upper	
Allowable limits	298.1	301.9	(±1.9)

Channel Verification for Yokogawa 100 Channel

Serial No.: 99-LE-004

Calibrator Used: SNT156701

Temperature Setting (°F): 400.0

Within specs? (Yes)/No

Performed by: Mike Dey MD

Title: Mgr. Dept. 2

Approved by:

Title: President

Date: 4/11/05

Channel No.	Reading (°F)	+/-	Channel No.	Reading (°F)	+/-
1	400.8	0.8			
2	400.6	0.6			
3	400.5	0.5			
4	400.5	0.5			
5	400.6	0.6			
6	400.6	0.6			
7	400.5	0.5			
8	400.6	0.6			
9	400.8	0.8			
10	400.8	0.8			
11	400.3	0.3			
12	400.1	0.1			
13	400.1	0.1			
14	399.9	-0.1			
15	400.1	0.1			
16	400.1	0.1			
17	399.9	-0.1			
18	400.1	0.1			
19	400.3	0.3			
20	400.5	0.5			

Range of 400°F Readings: **+0.8/-0.1**

	Lower	Upper	
Allowable limits	398.0	402.0	(±2.0)

Channel Verification for Yokogawa 100 Channel

Serial No.: 99-LE-004

Calibrator Used: SNT156701

Temperature Setting (°F): 1000.0

Within specs? Yes/No

Performed by: Mike Dey MD

Title: Mgr. Dept. 2

Approved by:

Title: President

Date: 4/11/05

Channel No.	Reading (°F)	+/-	Channel No.	Reading (°F)	+/-
1	1000.6	0.6			
2	1000.2	0.2			
3	1000.0	0.0			
4	1000.2	0.2			
5	1000.0	0.0			
6	1000.2	0.2			
7	1000.2	0.2			
8	1000.4	0.4			
9	1000.4	0.4			
10	1000.8	0.8			
11	1000.2	0.2			
12	1000.0	0.0			
13	999.9	-0.1			
14	1000.0	0.0			
15	1000.0	0.0			
16	1000.0	0.0			
17	1000.0	0.0			
18	1000.0	0.0			
19	1000.0	0.0			
20	1000.6	0.6			

Range of 2000°F Readings: **+0.8/-0.1**

	Lower	Upper	
Allowable limits	997.7	1002.3	(±2.3)

Channel Verification for Yokogawa 100 Channel

Serial No.: 99-LE-004

Calibrator Used: SNT156701

Temperature Setting (°F): 2000.0

Within specs? Yes/No

Performed by: Mike Dey MD

Title: Mgr. Dept. 2

Approved by:

Title: President

Date: 4/11/05

Channel No.	Reading (°F)	+/-	Channel No.	Reading (°F)	+/-
1	2000.3	0.3			
2	2000.3	0.3			
3	2000.1	0.1			
4	2000.1	0.1			
5	2000.3	0.3			
6	2000.3	0.3			
7	2000.1	0.1			
8	2000.3	0.3			
9	2000.3	0.3			
10	2000.7	0.7			
11	2000.5	0.5			
12	2000.3	0.3			
13	2000.5	0.5			
14	2000.3	0.3			
15	2000.3	0.3			
16	2000.5	0.5			
17	2000.3	0.3			
18	2000.5	0.5			
19	2000.7	0.7			
20	2000.8	0.8			

Range of 2000°F Readings: **+0.8/0.1**

	Lower	Upper	
Allowable limits	1997.2	2002.8	(±2.8)

Omega Point Laboratories, Inc.
16015 Shady Falls Road
Elmendorf, Texas 78112
800-966-5253 FAX 210-635-8101

Certificate of Verification

Certification No.: 92151

Verification Date: 04/11/2005

Reverification Date: 10/11/2005

Manufacturer: Yokogawa

Model No.: 100 Channel DAU

Serial No.: 99LE006

Equipment Description: 100 Channel Data Acquisition System with YOKOGAWA Darwin Series

Calibration Sources: TEGAM Model 840-A, SN: T-207318. Calibration due 05/03/2005.

PERFORMANCE:

Temperature: (75°F) +1.8/-0.3	Temperature: (150°F) +1.7/-0.5	Temperature: (300°F) +1.8/-0.5	Temperature: (400°F) +1.9/-0.6	Temperature: (1000°F) +2/-0.5	Temperature: (2000°F) +2.8/-0.8

Verification Performed by:

Mike Dey
Manager of Fire Resistance

Verification Approved by:

Deg Priest
President/Chief Technical Officer

OMEGA POINT LABORATORIES

Channel Verification for Yokogawa 100 Channel

Serial No.: 99-LE-006

Within specs? Yes/No

Calibrator Used: T-207318

Performed by: Mike Dey

Title: Mgr. Dept. 2

Temperature Setting (°F): 75.0

Approved by:

Title: President

Date: 4/11/05

Channel No.	Reading (°F)	+/-	Channel No.	Reading (°F)	+/-
1	75.7	0.7	51	74.8	-0.2
2	75.7	0.7	52	75.2	0.2
3	76.1	1.1	53	75.2	0.2
4	76.3	1.3	54	74.7	-0.3
5	75.9	0.9	55	74.7	-0.3
6	75.9	0.9	56	74.7	-0.3
7	76.1	1.1	57	74.7	-0.3
8	76.1	1.1	58	74.7	-0.3
9	76.1	1.1	59	74.7	-0.3
10	76.5	1.5	60	74.8	-0.2
11	76.3	1.3	61	75.9	0.9
12	76.8	1.8	62	76.3	1.3
13	76.6	1.6	63	76.3	1.3
14	75.9	0.9	64	75.7	0.7
15	75.7	0.7	65	75.7	0.7
16	75.7	0.7	66	75.7	0.7
17	75.7	0.7	67	75.9	0.9
18	75.7	0.7	68	75.9	0.9
19	75.7	0.7	69	75.9	0.9
20	76.3	1.3	70	76.5	1.5
21	75.9	0.9	71	75.7	0.7
22	76.3	1.3	72	76.3	1.3
23	76.3	1.3	73	76.3	1.3
24	75.7	0.7	74	75.7	0.7
25	75.6	0.6	75	75.7	0.7
26	75.7	0.7	76	75.7	0.7
27	75.7	0.7	77	75.7	0.7
28	75.7	0.7	78	75.7	0.7
29	75.9	0.9	79	75.9	0.9
30	76.3	1.3	80	76.3	1.3
31	75.7	0.7	81	74.8	-0.2
32	76.5	1.5	82	75.2	0.2
33	76.3	1.3	83	75.4	0.4
34	75.7	0.7	84	75.0	0.0
35	75.6	0.6	85	74.8	-0.2
36	75.6	0.6	86	75.0	0.0
37	75.6	0.6	87	75.2	0.2
38	75.7	0.7	88	75.2	0.2
39	75.7	0.7	89	75.4	0.4
40	75.9	0.9	90	75.7	0.7
41	76.1	1.1	91	74.8	-0.2
42	76.8	1.8	92	75.2	0.2
43	76.8	1.8	93	75.2	0.2
44	75.7	0.7	94	75.0	0.0
45	75.7	0.7	95	75.2	0.2
46	75.7	0.7	96	76.8	1.8
47	75.7	0.7	97	76.8	1.8
48	75.7	0.7	98	76.8	1.8
49	75.7	0.7	99	76.8	1.8
50	76.1	1.1	100	76.8	1.8

Range of 75°F Readings: **+1.8/-0.3**

	Lower	Upper	
Allowable limits	73.2	76.8	(±1.8)

Channel Verification for Yokogawa 100 Channel

Serial No.: 99-LE-006

Within specs? Yes/No

Calibrator Used: T-207318

Performed by: Mike Dey
Title: Mgr. Dept. 2

Temperature Setting (°F): 150.0

Approved by:
Title: President

Date: 4/11/05

Channel No.	Reading (°F)	+/-	Channel No.	Reading (°F)	+/-
1	151.5	1.5	51	149.7	-0.3
2	151.5	1.5	52	150.1	0.1
3	151.2	1.2	53	150.3	0.3
4	151.0	1.0	54	149.7	-0.3
5	150.8	0.8	55	149.5	-0.5
6	150.8	0.8	56	149.5	-0.5
7	150.8	0.8	57	149.7	-0.3
8	150.8	0.8	58	149.7	-0.3
9	151.0	1.0	59	149.7	-0.3
10	151.3	1.3	60	149.9	-0.1
11	151.2	1.2	61	150.8	0.8
12	151.5	1.5	62	151.0	1.0
13	151.5	1.5	63	151.2	1.2
14	150.8	0.8	64	150.8	0.8
15	150.8	0.8	65	150.4	0.4
16	150.6	0.6	66	150.6	0.6
17	150.8	0.8	67	150.8	0.8
18	150.6	0.6	68	150.8	0.8
19	150.8	0.8	69	150.8	0.8
20	151.2	1.2	70	151.3	1.3
21	150.8	0.8	71	150.8	0.8
22	151.3	1.3	72	151.0	1.0
23	151.3	1.3	73	151.2	1.2
24	150.8	0.8	74	150.6	0.6
25	150.6	0.6	75	150.4	0.4
26	150.8	0.8	76	150.6	0.6
27	150.8	0.8	77	150.8	0.8
28	150.8	0.8	78	150.8	0.8
29	150.8	0.8	79	150.8	0.8
30	151.2	1.2	80	151.2	1.2
31	150.8	0.8	81	149.7	-0.3
32	151.3	1.3	82	150.3	0.3
33	151.3	1.3	83	150.3	0.3
34	150.6	0.6	84	149.9	-0.1
35	150.4	0.4	85	149.9	-0.1
36	150.4	0.4	86	149.9	-0.1
37	150.6	0.6	87	150.1	0.1
38	150.6	0.6	88	150.3	0.3
39	150.6	0.6	89	150.3	0.3
40	150.8	0.8	90	150.4	0.4
41	151.0	1.0	91	149.7	-0.3
42	151.7	1.7	92	150.1	0.1
43	151.7	1.7	93	150.3	0.3
44	150.8	0.8	94	149.9	-0.1
45	150.8	0.8	95	150.1	0.1
46	150.8	0.8	96	151.7	1.7
47	150.6	0.6	97	151.7	1.7
48	150.8	0.8	98	151.7	1.7
49	150.8	0.8	99	151.6	1.6
50	151.0	1.0	100	151.7	1.7

Range of 150°F Readings: +1.7/-0.5

	Lower	Upper	
Allowable limits	148.2	151.8	(±1.8)

Channel Verification for Yokogawa 100 Channel

Serial No.: 99-LE-006

Within specs? Yes/No

Calibrator Used: T-207318

Performed by: Mike Dey

Title: Mgr. Dept. 2

Temperature Setting (°F): 300.0

Approved by:

Title: President

Date: 4/11/05

Channel No.	Reading (°F)	+/-	Channel No.	Reading (°F)	+/-
1	301.6	1.6	51	299.5	-0.5
2	301.8	1.8	52	300.0	0.0
3	301.8	1.8	53	300.0	0.0
4	300.7	0.7	54	299.5	-0.5
5	300.7	0.7	55	299.5	-0.5
6	300.7	0.7	56	299.5	-0.5
7	300.7	0.7	57	299.5	-0.5
8	300.7	0.7	58	299.5	-0.5
9	300.9	0.9	59	299.5	-0.5
10	301.1	1.1	60	299.5	-0.5
11	301.1	1.1	61	300.7	0.7
12	301.6	1.6	62	300.9	0.9
13	301.5	1.5	63	301.1	1.1
14	300.7	0.7	64	300.7	0.7
15	300.7	0.7	65	300.6	0.6
16	300.7	0.7	66	300.6	0.6
17	300.7	0.7	67	300.7	0.7
18	300.7	0.7	68	300.7	0.7
19	300.9	0.9	69	300.7	0.7
20	301.1	1.1	70	301.3	1.3
21	300.9	0.9	71	300.6	0.6
22	301.3	1.3	72	300.9	0.9
23	301.3	1.3	73	301.1	1.1
24	300.7	0.7	74	300.6	0.6
25	300.4	0.4	75	300.2	0.2
26	300.6	0.6	76	300.4	0.4
27	300.7	0.7	77	300.6	0.6
28	300.7	0.7	78	300.6	0.6
29	300.7	0.7	79	300.6	0.6
30	301.3	1.3	80	301.1	1.1
31	300.9	0.9	81	299.7	-0.3
32	301.5	1.5	82	299.8	-0.2
33	301.3	1.3	83	300.0	0.0
34	300.7	0.7	84	299.7	-0.3
35	300.4	0.4	85	299.7	-0.3
36	300.6	0.6	86	299.7	-0.3
37	300.6	0.6	87	299.7	-0.3
38	300.6	0.6	88	299.8	-0.2
39	300.7	0.7	89	300.0	0.0
40	300.9	0.9	90	300.4	0.4
41	300.7	0.7	91	299.5	-0.5
42	301.5	1.5	92	300.0	0.0
43	301.5	1.5	93	300.2	0.2
44	300.6	0.6	94	299.7	-0.3
45	300.4	0.4	95	300.0	0.0
46	300.4	0.4	96	301.6	1.6
47	300.4	0.4	97	301.8	1.8
48	300.4	0.4	98	301.8	1.8
49	300.4	0.4	99	301.8	1.8
50	300.7	0.7	100	301.8	1.8

Range of 300°F Readings: +1.8/-0.5

	Lower	Upper	
Allowable limits	298.1	301.9	(±1.9)

Channel Verification for Yokogawa 100 Channel

Serial No.: 99-LE-006

Within specs? Yes/No

Calibrator Used: T-207318

Performed by: Mike Dey

Title: Mgr. Dept. 2

Temperature Setting (°F): 400.0

Approved by:

Title: President

Date: 4/11/05

Channel No.	Reading (°F)	+/-	Channel No.	Reading (°F)	+/-
1	401.7	1.7	51	399.6	-0.4
2	401.9	1.9	52	400.1	0.1
3	401.9	1.9	53	400.3	0.3
4	401.0	1.0	54	399.6	-0.4
5	400.8	0.8	55	399.6	-0.4
6	400.8	0.8	56	399.6	-0.4
7	400.8	0.8	57	399.4	-0.6
8	400.8	0.8	58	399.6	-0.4
9	401.0	1.0	59	399.6	-0.4
10	401.4	1.4	60	399.6	-0.4
11	401.2	1.2	61	400.8	0.8
12	401.5	1.5	62	401.0	1.0
13	401.5	1.5	63	401.2	1.2
14	400.8	0.8	64	400.6	0.6
15	400.8	0.8	65	400.6	0.6
16	400.6	0.6	66	400.8	0.8
17	400.8	0.8	67	400.8	0.8
18	400.8	0.8	68	400.8	0.8
19	400.8	0.8	69	400.8	0.8
20	401.4	1.4	70	401.4	1.4
21	401.0	1.0	71	400.5	0.5
22	401.4	1.4	72	400.8	0.8
23	401.2	1.2	73	400.8	0.8
24	400.8	0.8	74	400.3	0.3
25	400.8	0.8	75	400.3	0.3
26	400.8	0.8	76	400.3	0.3
27	400.8	0.8	77	400.3	0.3
28	400.8	0.8	78	400.6	0.6
29	400.8	0.8	79	400.6	0.6
30	401.2	1.2	80	401.0	1.0
31	400.8	0.8	81	399.6	-0.4
32	401.4	1.4	82	400.1	0.1
33	401.4	1.4	83	400.1	0.1
34	400.6	0.6	84	399.6	-0.4
35	400.3	0.3	85	399.6	-0.4
36	400.3	0.3	86	399.9	-0.1
37	400.5	0.5	87	399.9	-0.1
38	400.5	0.5	88	400.1	0.1
39	400.5	0.5	89	400.1	0.1
40	400.8	0.8	90	400.3	0.3
41	400.8	0.8	91	399.6	-0.4
42	401.5	1.5	92	400.3	0.3
43	401.7	1.7	93	400.3	0.3
44	400.6	0.6	94	399.9	-0.1
45	400.5	0.5	95	400.3	0.3
46	400.5	0.5	96	400.3	0.3
47	400.5	0.5	97	401.7	1.7
48	400.5	0.5	98	401.7	1.7
49	400.6	0.6	99	401.7	1.7
50	400.8	0.8	100	401.7	1.7

Range of 400°F Readings: **+1.9/-0.6**

	Lower	Upper	
Allowable limits	398.0	402.0	(±2.0)

Channel Verification for Yokogawa 100 Channel

Serial No.: 99-LE-006

Within specs? Yes/No

Calibrator Used: T-207318

Performed by: Mike Dey
Title: Mgr. Dept. 2

Temperature Setting (°F): 1000.0

Approved by:
Title: President

Date: 4/11/05

Channel No.	Reading (°F)	+/-	Channel No.	Reading (°F)	+/-
1	1001.1	1.1	51	999.7	-0.3
2	1001.5	1.5	52	1000.0	0.0
3	1001.5	1.5	53	1000.0	0.0
4	1000.6	0.6	54	999.7	-0.3
5	1000.6	0.6	55	999.7	-0.3
6	1000.6	0.6	56	999.5	-0.5
7	1000.6	0.6	57	999.7	-0.3
8	1000.6	0.6	58	999.7	-0.3
9	1000.6	0.6	59	999.5	-0.5
10	1000.9	0.9	60	999.7	-0.3
11	1000.9	0.9	61	1000.8	0.8
12	1001.5	1.5	62	1000.9	0.9
13	1001.5	1.5	63	1000.9	0.9
14	1000.8	0.8	64	1000.6	0.6
15	1000.8	0.8	65	1000.6	0.6
16	1000.6	0.6	66	1000.6	0.6
17	1000.6	0.6	67	1000.6	0.6
18	1000.8	0.8	68	1000.8	0.8
19	1000.8	0.8	69	1000.9	0.9
20	1000.9	0.9	70	1000.9	0.9
21	1001.3	1.3	71	1000.4	0.4
22	1001.5	1.5	72	1000.6	0.6
23	1001.5	1.5	73	1000.6	0.6
24	1000.9	0.9	74	1000.0	0.0
25	1000.8	0.8	75	1000.0	0.0
26	1000.9	0.9	76	1000.0	0.0
27	1000.9	0.9	77	1000.2	0.2
28	1000.9	0.9	78	1000.2	0.2
29	1000.9	0.9	79	1000.2	0.2
30	1001.5	1.5	80	1000.8	0.8
31	1000.6	0.6	81	999.7	-0.3
32	1001.1	1.1	82	1000.0	0.0
33	1001.1	1.1	83	1000.0	0.0
34	1000.4	0.4	84	999.7	-0.3
35	1000.2	0.2	85	999.7	-0.3
36	1000.2	0.2	86	999.7	-0.3
37	1000.2	0.2	87	999.9	-0.1
38	1000.4	0.4	88	1000.0	0.0
39	1000.6	0.6	89	1000.0	0.0
40	1000.6	0.6	90	1000.4	0.4
41	1000.6	0.6	91	999.9	-0.1
42	1001.3	1.3	92	1000.0	0.0
43	1001.5	1.5	93	1000.0	0.0
44	1000.4	0.4	94	1000.0	0.0
45	1000.2	0.2	95	1000.0	0.0
46	1000.4	0.4	96	1000.0	0.0
47	1000.2	0.2	97	1001.8	1.8
48	1000.2	0.2	98	1001.8	1.8
49	1000.6	0.6	99	1001.8	1.8
50	1000.6	0.6	100	1002.0	2.0

Range of 2000°F Readings: **+2/-0.5**

	Lower	Upper	
Allowable limits	997.7	1002.3	(±2.3)

Channel Verification for Yokogawa 100 Channel

Serial No.: 99-LE-006

Within specs? Yes/No

Calibrator Used: T-207318

Performed by: Mike Dey

Title: Mgr. Dept. 2

Temperature Setting (°F): 2000.0

Approved by:

Title: President

Date: 4/11/05

Channel No.	Reading (°F)	+/-	Channel No.	Reading (°F)	+/-
1	2000.7	0.7	51	1999.6	-0.4
2	2001.0	1.0	52	1999.9	-0.1
3	2001.0	1.0	53	2000.1	0.1
4	2000.1	0.1	54	1999.6	-0.4
5	2000.1	0.1	55	1999.4	-0.6
6	1999.9	-0.1	56	1999.4	-0.6
7	1999.9	-0.1	57	1999.4	-0.6
8	2000.3	0.3	58	1999.4	-0.6
9	2000.3	0.3	59	1999.4	-0.6
10	2000.3	0.3	60	1999.9	-0.1
11	2000.8	0.8	61	2000.7	0.7
12	2001.2	1.2	62	2000.7	0.7
13	2001.2	1.2	63	2000.8	0.8
14	2000.5	0.5	64	2000.3	0.3
15	2000.5	0.5	65	2000.3	0.3
16	2000.5	0.5	66	2000.3	0.3
17	2000.3	0.3	67	2000.7	0.7
18	2000.5	0.5	68	2000.7	0.7
19	2000.5	0.5	69	2000.7	0.7
20	2000.7	0.7	70	2001.0	1.0
21	2001.7	1.7	71	1999.9	-0.1
22	2002.5	2.5	72	2000.5	0.5
23	2002.3	2.3	73	2000.5	0.5
24	2001.6	1.6	74	1999.8	-0.2
25	2001.6	1.6	75	1999.9	-0.1
26	2001.6	1.6	76	1999.9	-0.1
27	2001.4	1.4	77	1999.8	-0.2
28	2001.7	1.7	78	1999.9	-0.1
29	2001.7	1.7	79	2000.1	0.1
30	2001.9	1.9	80	2000.5	0.5
31	2000.7	0.7	81	1999.2	-0.8
32	2001.0	1.0	82	1999.9	-0.1
33	2001.0	1.0	83	1999.9	-0.1
34	2000.5	0.5	84	1999.4	-0.6
35	2000.3	0.3	85	1999.4	-0.6
36	2000.3	0.3	86	1999.6	-0.4
37	2000.3	0.3	87	1999.6	-0.4
38	2000.3	0.3	88	1999.8	-0.2
39	2000.7	0.7	89	1999.9	-0.1
40	2000.7	0.7	90	2000.3	0.3
41	2000.5	0.5	91	1999.6	-0.4
42	2001.0	1.0	92	1999.9	-0.1
43	2001.0	1.0	93	2000.3	0.3
44	2000.1	0.1	94	1999.9	-0.1
45	1999.9	-0.1	95	1999.9	-0.1
46	1999.9	-0.1	96	2002.8	2.8
47	1999.9	-0.1	97	2001.7	1.7
48	1999.9	-0.1	98	2001.9	1.9
49	1999.9	-0.1	99	2002.3	2.3
50	2000.5	0.5	100	2002.3	2.3

Range of 2000°F Readings: **+2.8/-0.8**

	Lower	Upper	
Allowable limits	1997.2	2002.8	(±2.8)

Omega Point Laboratories, Inc.
16015 Shady Falls Road
Elmendorf, Texas 78112
800-966-5253 FAX 210-635-8101

Certificate of Verification

Certification No.:	92154
Verification Date:	04/25/2005
Reverification Date:	10/25/2005
Manufacturer:	Yokogawa
Model No.:	100 Channel DAU
Serial No.:	99LE006
Equipment Description:	100 Channel Data Acquisition System with YOKOGAWA Darwin Series
Calibration Sources:	TEGAM Model 840-A, SN: T-207318. Calibration due 05/03/2005.

PERFORMANCE:

Temperature: (75°F) +1.5/-0	Temperature: (150°F) +1.5/-0.1	Temperature: (300°F) +1.5/-0.3	Temperature: (400°F) +1.5/-0.3	Temperature: (1000°F) +1.3/-0.1	Temperature: (2000°F) +1.7/-0.6

Verification Performed by:

Mike Dey
Manager of Fire Resistance

Verification Approved by:

Deg Priest
President/Chief Technical Officer

OMEGA POINT LABORATORIES

Channel Verification for Yokogawa 100 Channel

Serial No.: 99-LE-006

Calibrator Used: T-207318

Temperature Setting (°F): 75.0

Within specs? Yes/No

Performed by: Mike Dey MD

Title: Mgr. Dept. 2

Approved by:

Title: President

Date: 4/25/05

Channel No.	Reading (°F)	+/-	Channel No.	Reading (°F)	+/-
1	76.3	1.3	51	75.2	0.2
2	76.6	1.6	52	75.4	0.4
3	76.6	1.6	53	75.2	0.2
4	75.9	0.9	54	75.0	0.0
5	75.7	0.7	55	75.2	0.2
6	75.6	0.6	56	75.2	0.2
7	75.7	0.7	57	75.0	0.0
8	75.7	0.7	58	75.2	0.2
9	75.9	0.9	59	75.2	0.2
10	76.3	1.3	60	75.2	0.2
11	76.3	1.3	61	75.7	0.7
12	76.5	1.5	62	75.9	0.9
13	76.5	1.5	63	76.1	1.1
14	75.7	0.7	64	75.7	0.7
15	75.7	0.7	65	75.6	0.6
16	75.7	0.7	66	75.6	0.6
17	75.7	0.7	67	75.7	0.7
18	75.7	0.7	68	75.7	0.7
19	75.7	0.7	69	75.7	0.7
20	76.3	1.3	70	76.1	1.1
21	75.7	0.7	71	75.9	0.9
22	76.1	1.1	72	76.3	1.3
23	75.9	0.9	73	76.1	1.1
24	75.4	0.4	74	75.7	0.7
25	75.4	0.4	75	75.7	0.7
26	75.2	0.2	76	75.7	0.7
27	75.4	0.4	77	75.7	0.7
28	75.6	0.6	78	75.7	0.7
29	75.6	0.6	79	75.7	0.7
30	75.9	0.9	80	75.9	0.9
31	75.7	0.7	81	75.4	0.4
32	76.3	1.3	82	75.7	0.7
33	76.3	1.3	83	75.7	0.7
34	75.6	0.6	84	75.2	0.2
35	75.4	0.4	85	75.2	0.2
36	75.4	0.4	86	75.2	0.2
37	75.4	0.4	87	75.2	0.2
38	75.4	0.4	88	75.2	0.2
39	75.6	0.6	89	75.2	0.2
40	75.7	0.7	90	75.7	0.7
41	75.7	0.7	91	75.6	0.6
42	76.3	1.3	92	75.6	0.6
43	76.3	1.3	93	75.7	0.7
44	75.6	0.6	94	75.6	0.6
45	75.6	0.6	95	75.6	0.6
46	75.4	0.4	96	75.6	0.6
47	75.4	0.4	97	75.7	0.7
48	75.6	0.6	98	75.7	0.7
49	75.6	0.6	99	75.7	0.7
50	75.7	0.7	100	75.7	0.7

Range of 75°F Readings: **+1.6/0**

	Lower	Upper	
Allowable limits	73.2	76.8	(±1.8)

Channel Verification for Yokogawa 100 Channel

Serial No.: 99-LE-006

Calibrator Used: T-207318

Temperature Setting (°F): 150.0

Within specs? Yes/No

Performed by: Mike Dey MD

Title: Mgr. Dept. 2

Approved by:

Title: President

Date: 4/25/05

Channel No.	Reading (°F)	+/-	Channel No.	Reading (°F)	+/-
1	151.3	1.3	51	150.3	0.3
2	151.3	1.3	52	150.4	0.4
3	151.5	1.5	53	150.4	0.4
4	150.8	0.8	54	150.1	0.1
5	150.6	0.6	55	150.1	0.1
6	150.6	0.6	56	150.1	0.1
7	150.6	0.6	57	150.1	0.1
8	150.8	0.8	58	150.1	0.1
9	150.8	0.8	59	150.1	0.1
10	151.2	1.2	60	150.3	0.3
11	151.3	1.3	61	150.8	0.8
12	151.5	1.5	62	150.8	0.8
13	151.5	1.5	63	151.0	1.0
14	150.8	0.8	64	150.4	0.4
15	150.8	0.8	65	150.4	0.4
16	150.8	0.8	66	150.4	0.4
17	150.8	0.8	67	150.6	0.6
18	150.8	0.8	68	150.4	0.4
19	151.0	1.0	69	150.6	0.6
20	151.3	1.3	70	150.8	0.8
21	150.6	0.6	71	150.8	0.8
22	150.8	0.8	72	151.2	1.2
23	150.8	0.8	73	151.3	1.3
24	150.3	0.3	74	150.6	0.6
25	150.3	0.3	75	150.6	0.6
26	150.3	0.3	76	150.6	0.6
27	150.3	0.3	77	150.4	0.4
28	150.3	0.3	78	150.4	0.4
29	150.6	0.6	79	150.6	0.6
30	150.8	0.8	80	150.8	0.8
31	150.8	0.8	81	150.3	0.3
32	151.2	1.2	82	150.6	0.6
33	151.2	1.2	83	150.6	0.6
34	150.4	0.4	84	150.3	0.3
35	150.4	0.4	85	150.1	0.1
36	150.4	0.4	86	150.3	0.3
37	150.3	0.3	87	150.3	0.3
38	150.4	0.4	88	150.3	0.3
39	150.6	0.6	89	150.3	0.3
40	150.8	0.8	90	150.4	0.4
41	150.8	0.8	91	150.4	0.4
42	151.3	1.3	92	150.6	0.6
43	151.5	1.5	93	150.8	0.8
44	150.6	0.6	94	150.4	0.4
45	150.4	0.4	95	150.4	0.4
46	150.4	0.4	96	150.6	0.6
47	150.4	0.4	97	150.6	0.6
48	150.4	0.4	98	150.6	0.6
49	150.6	0.6	99	150.8	0.8
50	150.8	0.8	100	150.8	0.8

Range of 150°F Readings: **+1.5/0.1**

	Lower	Upper	
Allowable limits	148.2	151.8	(±1.8)

Channel Verification for Yokogawa 100 Channel

Serial No.: 99-LE-006

Calibrator Used: T-207318

Temperature Setting (°F): 300.0

Within specs? Yes/No

Performed by: Mike Dey

Title: Mgr. Dept. 2

Approved by:

Title: President

Date: 4/25/05

Channel No.	Reading (°F)	+/-	Channel No.	Reading (°F)	+/-
1	301.1	1.1	51	300.0	0.0
2	301.5	1.5	52	300.2	0.2
3	301.3	1.3	53	300.2	0.2
4	300.6	0.6	54	299.8	-0.2
5	300.4	0.4	55	299.7	-0.3
6	300.4	0.4	56	299.8	-0.2
7	300.4	0.4	57	299.8	-0.2
8	300.7	0.7	58	299.7	-0.3
9	300.7	0.7	59	300.0	0.0
10	300.9	0.9	60	300.2	0.2
11	301.1	1.1	61	300.7	0.7
12	301.5	1.5	62	301.1	1.1
13	301.5	1.5	63	300.9	0.9
14	300.7	0.7	64	300.6	0.6
15	300.7	0.7	65	300.6	0.6
16	300.6	0.6	66	300.4	0.4
17	300.6	0.6	67	300.6	0.6
18	300.7	0.7	68	300.7	0.7
19	300.7	0.7	69	300.7	0.7
20	300.9	0.9	70	300.9	0.9
21	300.6	0.6	71	300.6	0.6
22	300.9	0.9	72	300.9	0.9
23	300.9	0.9	73	300.7	0.7
24	300.4	0.4	74	300.4	0.4
25	300.4	0.4	75	300.2	0.2
26	300.4	0.4	76	300.4	0.4
27	300.2	0.2	77	300.2	0.2
28	300.4	0.4	78	300.2	0.2
29	300.6	0.6	79	300.4	0.4
30	300.7	0.7	80	300.6	0.6
31	300.6	0.6	81	300.2	0.2
32	300.9	0.9	82	300.4	0.4
33	300.9	0.9	83	300.4	0.4
34	300.2	0.2	84	300.0	0.0
35	300.2	0.2	85	300.0	0.0
36	300.2	0.2	86	300.0	0.0
37	300.2	0.2	87	300.0	0.0
38	300.4	0.4	88	300.2	0.2
39	300.4	0.4	89	300.2	0.2
40	300.6	0.6	90	300.2	0.2
41	300.7	0.7	91	300.2	0.2
42	301.3	1.3	92	300.4	0.4
43	301.3	1.3	93	300.4	0.4
44	300.4	0.4	94	300.2	0.2
45	300.2	0.2	95	300.4	0.4
46	300.4	0.4	96	300.4	0.4
47	300.2	0.2	97	300.2	0.2
48	300.4	0.4	98	300.6	0.6
49	300.6	0.6	99	300.4	0.4
50	300.7	0.7	100	300.6	0.6

Range of 300°F Readings: +1.5/-0.3

	Lower	Upper	
Allowable limits	298.1	301.9	(±1.9)

Channel Verification for Yokogawa 100 Channel

Serial No.: 99-LE-006

Calibrator Used: T-207318

Temperature Setting (°F): 400.0

Within specs? Yes/No

Performed by: Mike Dey MD

Title: Mgr. Dept. 2

Approved by:

Title: President

Date: 4/25/05

Channel No.	Reading (°F)	+/-	Channel No.	Reading (°F)	+/-
1	401.4	1.4	51	400.1	0.1
2	401.5	1.5	52	400.5	0.5
3	401.4	1.4	53	400.3	0.3
4	400.6	0.6	54	399.9	-0.1
5	400.6	0.6	55	399.9	-0.1
6	400.5	0.5	56	399.9	-0.1
7	400.6	0.6	57	399.7	-0.3
8	400.8	0.8	58	399.9	-0.1
9	400.8	0.8	59	400.1	0.1
10	401.2	1.2	60	400.1	0.1
11	400.8	0.8	61	400.8	0.8
12	401.4	1.4	62	400.8	0.8
13	401.4	1.4	63	400.8	0.8
14	400.6	0.6	64	400.6	0.6
15	400.6	0.6	65	400.5	0.5
16	400.6	0.6	66	400.3	0.3
17	400.6	0.6	67	400.5	0.5
18	400.6	0.6	68	400.6	0.6
19	400.6	0.6	69	400.6	0.6
20	400.8	0.8	70	400.8	0.8
21	400.6	0.6	71	400.8	0.8
22	401.2	1.2	72	401.0	1.0
23	401.0	1.0	73	401.0	1.0
24	400.3	0.3	74	400.5	0.5
25	400.3	0.3	75	400.5	0.5
26	400.3	0.3	76	400.3	0.3
27	400.3	0.3	77	400.3	0.3
28	400.5	0.5	78	400.3	0.3
29	400.6	0.6	79	400.5	0.5
30	400.8	0.8	80	400.6	0.6
31	400.8	0.8	81	400.3	0.3
32	400.8	0.8	82	400.6	0.6
33	401.0	1.0	83	400.5	0.5
34	400.5	0.5	84	400.3	0.3
35	400.3	0.3	85	400.1	0.1
36	400.3	0.3	86	400.1	0.1
37	400.3	0.3	87	400.3	0.3
38	400.3	0.3	88	400.3	0.3
39	400.3	0.3	89	400.3	0.3
40	400.8	0.8	90	400.5	0.5
41	400.6	0.6	91	400.5	0.5
42	401.4	1.4	92	400.6	0.6
43	401.4	1.4	93	400.6	0.6
44	400.5	0.5	94	400.6	0.6
45	400.3	0.3	95	400.5	0.5
46	400.3	0.3	96	400.5	0.5
47	400.3	0.3	97	400.6	0.6
48	400.5	0.5	98	400.8	0.8
49	400.5	0.5	99	400.8	0.8
50	400.8	0.8	100	400.8	0.8

Range of 400°F Readings: **+1.5/-0.3**

	Lower	Upper	
Allowable limits	398.0	402.0	(±2.0)

Channel Verification for Yokogawa 100 Channel

Serial No.: 99-LE-006

Calibrator Used: T-207318

Temperature Setting (°F): 1000.0

Within specs? Yes/No

Performed by: Mike Dey MD

Title: Mgr. Dept. 2

Approved by:

Title: President

Date: 4/25/05

Channel No.	Reading (°F)	+/-	Channel No.	Reading (°F)	+/-
1	1000.6	0.6	51	1000.0	0.0
2	1000.9	0.9	52	1000.2	0.2
3	1001.1	1.1	53	1000.0	0.0
4	1000.4	0.4	54	1000.0	0.0
5	1000.2	0.2	55	1000.0	0.0
6	1000.2	0.2	56	999.9	-0.1
7	1000.2	0.2	57	1000.0	0.0
8	1000.4	0.4	58	1000.0	0.0
9	1000.6	0.6	59	999.9	-0.1
10	1000.8	0.8	60	1000.0	0.0
11	1000.6	0.6	61	1000.6	0.6
12	1001.1	1.1	62	1000.8	0.8
13	1001.1	1.1	63	1000.9	0.9
14	1000.4	0.4	64	1000.4	0.4
15	1000.4	0.4	65	1000.4	0.4
16	1000.4	0.4	66	1000.4	0.4
17	1000.4	0.4	67	1000.4	0.4
18	1000.4	0.4	68	1000.4	0.4
19	1000.6	0.6	69	1000.6	0.6
20	1000.6	0.6	70	1000.8	0.8
21	1000.9	0.9	71	1000.6	0.6
22	1001.3	1.3	72	1000.8	0.8
23	1001.3	1.3	73	1000.6	0.6
24	1000.8	0.8	74	1000.4	0.4
25	1000.6	0.6	75	1000.2	0.2
26	1000.6	0.6	76	1000.0	0.0
27	1000.8	0.8	77	1000.2	0.2
28	1000.8	0.8	78	1000.2	0.2
29	1000.9	0.9	79	1000.2	0.2
30	1001.3	1.3	80	1000.6	0.6
31	1000.6	0.6	81	1000.0	0.0
32	1000.8	0.8	82	1000.6	0.6
33	1000.9	0.9	83	1000.4	0.4
34	1000.2	0.2	84	999.9	-0.1
35	1000.0	0.0	85	1000.0	0.0
36	1000.0	0.0	86	1000.0	0.0
37	1000.2	0.2	87	999.9	-0.1
38	1000.2	0.2	88	1000.0	0.0
39	1000.4	0.4	89	1000.2	0.2
40	1000.6	0.6	90	1000.2	0.2
41	1000.6	0.6	91	1000.6	0.6
42	1000.9	0.9	92	1000.6	0.6
43	1001.1	1.1	93	1000.6	0.6
44	1000.2	0.2	94	1000.6	0.6
45	1000.0	0.0	95	1000.6	0.6
46	1000.0	0.0	96	1000.6	0.6
47	1000.2	0.2	97	1000.6	0.6
48	1000.0	0.0	98	1000.6	0.6
49	1000.2	0.2	99	1000.8	0.8
50	1000.6	0.6	100	1000.8	0.8

Range of 2000°F Readings: **+1.3/-0.1**

	Lower	Upper	
Allowable limits	997.7	1002.3	(±2.3)

Channel Verification for Yokogawa 100 Channel

Serial No.: 99-LE-006

Calibrator Used: T-207318

Temperature Setting (°F): 2000.0

Within specs? Yes/No

Performed by: Mike Dey

Title: Mgr. Dept. 2

Approved by:

Title: President

Date: 4/25/05

Channel No.	Reading (°F)	+/-	Channel No.	Reading (°F)	+/-
1	2000.5	0.5	51	1999.9	-0.1
2	2000.7	0.7	52	2000.1	0.1
3	2000.7	0.7	53	2000.3	0.3
4	1999.9	-0.1	54	1999.8	-0.2
5	1999.8	-0.2	55	1999.8	-0.2
6	1999.8	-0.2	56	1999.8	-0.2
7	1999.8	-0.2	57	1999.8	-0.2
8	1999.9	-0.1	58	1999.8	-0.2
9	2000.1	0.1	59	1999.9	-0.1
10	2000.3	0.3	60	1999.9	-0.1
11	2000.7	0.7	61	2000.7	0.7
12	2001.2	1.2	62	2000.8	0.8
13	2001.0	1.0	63	2000.7	0.7
14	2000.5	0.5	64	2000.5	0.5
15	2000.3	0.3	65	2000.7	0.7
16	2000.3	0.3	66	2000.5	0.5
17	2000.3	0.3	67	2000.5	0.5
18	2000.3	0.3	68	2000.7	0.7
19	2000.3	0.3	69	2000.7	0.7
20	2000.7	0.7	70	2000.7	0.7
21	2001.4	1.4	71	1999.8	-0.2
22	2001.7	1.7	72	2000.3	0.3
23	2001.7	1.7	73	2000.1	0.1
24	2001.0	1.0	74	1999.6	-0.4
25	2001.0	1.0	75	1999.6	-0.4
26	2001.2	1.2	76	1999.6	-0.4
27	2001.2	1.2	77	1999.4	-0.6
28	2001.2	1.2	78	1999.6	-0.4
29	2001.4	1.4	79	1999.6	-0.4
30	2001.7	1.7	80	1999.8	-0.2
31	2000.3	0.3	81	1999.9	-0.1
32	2001.0	1.0	82	2000.3	0.3
33	2000.8	0.8	83	2000.1	0.1
34	1999.9	-0.1	84	1999.9	-0.1
35	1999.9	-0.1	85	1999.8	-0.2
36	1999.9	-0.1	86	1999.6	-0.4
37	1999.9	-0.1	87	1999.6	-0.4
38	2000.1	0.1	88	1999.9	-0.1
39	1999.9	-0.1	89	1999.8	-0.2
40	2000.3	0.3	90	1999.9	-0.1
41	2000.1	0.1	91	2000.5	0.5
42	2000.8	0.8	92	2000.7	0.7
43	2001.0	1.0	93	2000.7	0.7
44	1999.9	-0.1	94	2000.7	0.7
45	1999.9	-0.1	95	2000.5	0.5
46	1999.9	-0.1	96	2000.7	0.7
47	1999.9	-0.1	97	2000.7	0.7
48	1999.9	-0.1	98	2000.7	0.7
49	2000.1	0.1	99	2000.8	0.8
50	2000.3	0.3	100	2000.8	0.8

Range of 2000°F Readings: **+1.7/-0.6**

	Lower	Upper	
Allowable limits	1997.2	2002.8	(±2.8)

Omega Point Laboratories, Inc.
16015 Shady Falls Road
Elmendorf, Texas 78112
800-966-5253 FAX 210-635-8101

Certificate of Verification

Certification No.:	92153
Verification Date:	04/25/2005
Reverification Date:	10/25/2005
Manufacturer:	Yokogawa
Model No.:	100 Channel DAU
Serial No.:	99LE004
Equipment Description:	100 Channel Data Acquisition System with YOKOGAWA Darwin Series ***(only 1st - 20 channels used)***
Verification Sources:	TEGAM Model 840-A, SN: T-207318. Calibration due 05/03/2005.

PERFORMANCE:

Temperature: (75°F) +0.9/0	Temperature: (150°F) +1/-0.3	Temperature: (300°F) +0.9/-0.3	Temperature: (400°F) +1/-0.3	Temperature: (1000°F) +0.8/-0.1	Temperature: (2000°F) +1/-0.1

Verification Performed by:

Mike Dey
Manager of Fire Resistance

Verification Approved by:

Deg Priest
President/Chief Technical Officer

Channel Verification for Yokogawa 100 Channel

Serial No.: 99-LE-004

Calibrator Used: SNT156701

Temperature Setting (°F): 75.0

Within specs? Yes/No

Performed by: Mike Dey MD

Title: Mgr. Dept. 2

Approved by:

Title: President

Date: 4/25/05

Channel No.	Reading (°F)	+/-	Channel No.	Reading (°F)	+/-
1	75.6	0.6			
2	75.4	0.4			
3	75.4	0.4			
4	75.4	0.4			
5	75.6	0.6			
6	75.4	0.4			
7	75.6	0.6			
8	75.6	0.6			
9	75.7	0.7			
10	75.9	0.9			
11	75.2	0.2			
12	75.0	0.0			
13	75.0	0.0			
14	75.0	0.0			
15	75.0	0.0			
16	75.0	0.0			
17	75.0	0.0			
18	75.2	0.2			
19	75.2	0.2			
20	75.7	0.7			

Range of 75°F Readings: +0.9/0

	Lower	Upper	
Allowable limits	73.2	76.8	(±1.8)

Channel Verification for Yokogawa 100 Channel

Serial No.: 99-LE-004

Calibrator Used: SNT156701

Temperature Setting (°F): 150.0

Within specs? Yes/No

Performed by: Mike Dey MD

Title: Mgr. Dept. 2

Approved by:

Title: President

Date: 4/25/05

Channel No.	Reading (°F)	+/-	Channel No.	Reading (°F)	+/-
1	150.4	0.4			
2	150.4	0.4			
3	150.3	0.3			
4	150.3	0.3			
5	150.3	0.3			
6	150.4	0.4			
7	150.3	0.3			
8	150.6	0.6			
9	150.8	0.8			
10	151.0	1.0			
11	149.9	-0.1			
12	149.9	-0.1			
13	149.9	-0.1			
14	149.7	-0.3			
15	149.9	-0.1			
16	150.1	0.1			
17	149.9	-0.1			
18	150.1	0.1			
19	150.3	0.3			
20	150.8	0.8			

Range of 150°F Readings: +1/-0.3

	Lower	Upper	
Allowable limits	148.2	151.8	(±1.8)

Channel Verification for Yokogawa 100 Channel

Serial No.: 99-LE-004

Calibrator Used: SNT156701

Temperature Setting (°F): 300.0

Within specs? Yes/No

Performed by: Mike Dey MD

Title: Mgr. Dept. 2

Approved by:

Title: President

Date: 4/25/05

Channel No.	Reading (°F)	+/-	Channel No.	Reading (°F)	+/-
1	300.2	0.2			
2	300.2	0.2			
3	300.2	0.2			
4	300.2	0.2			
5	300.2	0.2			
6	300.2	0.2			
7	300.2	0.2			
8	300.2	0.2			
9	300.4	0.4			
10	300.9	0.9			
11	300.0	0.0			
12	299.8	-0.2			
13	299.8	-0.2			
14	299.8	-0.2			
15	299.7	-0.3			
16	299.8	-0.2			
17	300.0	0.0			
18	300.0	0.0			
19	300.2	0.2			
20	300.7	0.7			

Range of 300°F Readings: **+0.9/-0.3**

	Lower	Upper	
Allowable limits	298.1	301.9	(±1.9)

Channel Verification for Yokogawa 100 Channel

Serial No.: 99-LE-004

Calibrator Used: SNT156701

Temperature Setting (°F): 400.0

Within specs? Yes/No

Performed by: Mike Dey MD

Title: Mgr. Dept. 2

Approved by:

Title: President

Date: 4/25/05

Channel No.	Reading (°F)	+/-	Channel No.	Reading (°F)	+/-
1	400.3	0.3			
2	400.3	0.3			
3	400.3	0.3			
4	400.3	0.3			
5	400.3	0.3			
6	400.3	0.3			
7	400.3	0.3			
8	400.3	0.3			
9	400.6	0.6			
10	401.0	1.0			
11	399.9	-0.1			
12	399.7	-0.3			
13	399.9	-0.1			
14	399.7	-0.3			
15	399.7	-0.3			
16	399.9	-0.1			
17	399.9	-0.1			
18	399.9	-0.1			
19	400.3	0.3			
20	400.8	0.8			

Range of 400°F Readings: **+1/-0.3**

	Lower	Upper	
Allowable limits	398.0	402.0	(±2.0)

Channel Verification for Yokogawa 100 Channel

Serial No.: 99-LE-004

Calibrator Used: SNT156701

Temperature Setting (°F): 1000.0

Within specs? Yes/No

Performed by: Mike Dey

Title: Mgr. Dept. 2

Approved by:

Title: President

Date: 4/25/05

Channel No.	Reading (°F)	+/-	Channel No.	Reading (°F)	+/-
1	1000.2	0.2			
2	1000.2	0.2			
3	1000.0	0.0			
4	1000.0	0.0			
5	1000.0	0.0			
6	1000.2	0.2			
7	1000.2	0.2			
8	1000.2	0.2			
9	1000.6	0.6			
10	1000.8	0.8			
11	1000.0	0.0			
12	999.9	-0.1			
13	999.9	-0.1			
14	999.9	-0.1			
15	1000.0	0.0			
16	1000.0	0.0			
17	999.9	-0.1			
18	1000.0	0.0			
19	1000.2	0.2			
20	1000.6	0.6			

Range of 2000°F Readings: **+0.8/-0.1**

	Lower	Upper	
Allowable limits	997.7	1002.3	(±2.3)

Channel Verification for Yokogawa 100 Channel

Serial No.: 99-LE-004

Calibrator Used: SNT156701

Temperature Setting (°F): 2000.0

Within specs? Yes/No

Performed by: Mike Dey MD

Title: Mgr. Dept. 2

Approved by:

Title: President

Date: 4/25/05

Channel No.	Reading (°F)	+/-	Channel No.	Reading (°F)	+/-
1	2000.5	0.5			
2	2000.1	0.1			
3	2000.1	0.1			
4	2000.3	0.3			
5	2000.3	0.3			
6	2000.1	0.1			
7	2000.3	0.3			
8	2000.5	0.5			
9	2000.5	0.5			
10	2001.0	1.0			
11	2000.3	0.3			
12	1999.9	-0.1			
13	1999.9	-0.1			
14	1999.9	-0.1			
15	1999.9	-0.1			
16	1999.9	-0.1			
17	2000.1	0.1			
18	2000.1	0.1			
19	2000.5	0.5			
20	2000.8	0.8			

Range of 2000°F Readings: +1/-0.1

	Lower	Upper	
Allowable limits	1997.2	2002.8	(±2.8)

Omega Point Laboratories, Inc.
16015 Shady Falls Road
Elmendorf, Texas 78112
800-966-5253 FAX 210-635-8101

Certificate of Verification

Certification No.:	92152
Verification Date:	04/25/2005
Re-verification Date:	10/25/2005
Manufacturer:	Yokogawa
Model No.:	300 Channel DAU-
Serial No.:	48JF0082
Equipment Description:	300 Channel Data Acquisition System with YOKOGAWA Darwin Series
Calibration Sources:	TEGAM Model 840-A, SN: T-207318. Calibration due 05/03/2005.

PERFORMANCE:

Temperature: (75°F) +1.3/-0.3	Temperature: (150°F) +1/-0.3	Temperature: (300°F) +0.9/-0.7	Temperature: (400°F) +1/-0.4	Temperature: (1000°F) +0.9/-0.3	Temperature: (2000°F) 1.6/-0.8

Measurement Uncertainty: ± 0.2%

Verification Performed by:

Mike Dey
Manager Fire Resistance

Verification Approved by:

Deg Priest
President/Chief Technical Officer

Channel Verification for Yokogawa 300 Channel

Serial No.: 48JF0082

Calibrator Used: SNT156701

Temperature Setting (°F): 75.0

Channel No.	Reading (°F)	+/-	Channel No.	Reading (°F)	+/-	Channel No.	Reading (°F)	+/-
1	75.6	0.6	101	75.4	0.4	201	75.0	0.0
2	75.4	0.4	102	75.4	0.4	202	75.2	0.2
3	75.4	0.4	103	75.4	0.4	203	75.2	0.2
4	75.4	0.4	104	75.4	0.4	204	75.2	0.2
5	76.3	1.3	105	75.4	0.4	205	75.2	0.2
6	75.6	0.6	106	75.7	0.7	206	75.2	0.2
7	75.7	0.7	107	75.6	0.6	207	75.2	0.2
8	75.7	0.7	108	75.7	0.7	208	75.4	0.4
9	75.7	0.7	109	75.7	0.7	209	75.6	0.6
10	75.9	0.9	110	75.7	0.7	210	75.7	0.7
11	75.2	0.2	111	75.2	0.2	211	75.0	0.0
12	75.0	0.0	112	75.2	0.2	212	75.0	0.0
13	75.0	0.0	113	75.2	0.2	213	75.0	0.0
14	75.0	0.0	114	75.4	0.4	214	75.0	0.0
15	75.0	0.0	115	75.4	0.4	215	75.0	0.0
16	75.2	0.2	116	75.4	0.4	216	75.2	0.2
17	75.2	0.2	117	75.7	0.7	217	75.2	0.2
18	75.2	0.2	118	75.7	0.7	218	75.2	0.2
19	75.4	0.4	119	75.7	0.7	219	75.6	0.6
20	75.7	0.7	120	75.9	0.9	220	75.6	0.6
21	75.6	0.6	121	75.6	0.6	221	74.7	-0.3
22	75.4	0.4	122	75.4	0.4	222	74.7	-0.3
23	75.4	0.4	123	75.4	0.4	223	74.8	-0.2
24	75.4	0.4	124	75.4	0.4	224	74.8	-0.2
25	75.2	0.2	125	75.6	0.6	225	75.0	0.0
26	75.2	0.2	126	75.6	0.6	226	75.0	0.0
27	75.2	0.2	127	75.6	0.6	227	75.0	0.0
28	75.4	0.4	128	75.6	0.6	228	75.2	0.2
29	75.6	0.6	129	75.7	0.7	229	75.2	0.2
30	75.7	0.7	130	75.9	0.9	230	75.6	0.6
31	75.4	0.4	131	75.0	0.0	231	75.0	0.0
32	75.2	0.2	132	75.0	0.0	232	75.0	0.0
33	75.4	0.4	133	75.0	0.0	233	74.8	-0.2
34	75.2	0.2	134	75.2	0.2	234	75.0	0.0
35	75.4	0.4	135	75.2	0.2	235	75.2	0.2
36	75.4	0.4	136	75.2	0.2	236	75.2	0.2
37	75.6	0.6	137	75.2	0.2	237	75.2	0.2
38	75.7	0.7	138	75.2	0.2	238	75.2	0.2
39	75.7	0.7	139	75.4	0.4	239	75.4	0.4
40	75.9	0.9	140	75.6	0.6	240	75.6	0.6
41	75.0	0.0	141	74.8	-0.2	241	75.6	0.6
42	75.0	0.0	142	74.8	-0.2	242	75.6	0.6
43	75.0	0.0	143	74.8	-0.2	243	75.6	0.6
44	75.2	0.2	144	75.2	0.2	244	75.6	0.6
45	75.2	0.2	145	75.2	0.2	245	75.7	0.7
46	75.2	0.2	146	74.8	-0.2	246	75.7	0.7
47	75.2	0.2	147	75.2	0.2	247	75.7	0.7
48	75.2	0.2	148	75.2	0.2	248	75.7	0.7
49	75.2	0.2	149	75.0	0.0	249	75.6	0.6
50	75.2	0.2	150	75.0	0.0	250	75.7	0.7
51	74.7	-0.3	151	75.6	0.6	251	74.8	-0.2
52	74.8	-0.2	152	75.4	0.4	252	74.8	-0.2
53	75.2	0.2	153	75.4	0.4	253	74.8	-0.2
54	74.8	-0.2	154	75.4	0.4	254	75.2	0.2

55	75.2	0.2	155	75.6	0.6	255	75.2	0.2
56	75.4	0.4	156	75.6	0.6	256	75.2	0.2
57	75.4	0.4	157	75.6	0.6	257	75.2	0.2
58	75.2	0.2	158	75.7	0.7	258	75.4	0.4
59	75.4	0.4	159	75.7	0.7	259	75.4	0.4
60	75.6	0.6	160	76.3	1.3	260	75.7	0.7
61	75.6	0.6	161	75.6	0.6	261	75.2	0.2
62	75.4	0.4	162	75.6	0.6	262	75.2	0.2
63	75.4	0.4	163	75.6	0.6	263	75.4	0.4
64	75.6	0.6	164	75.6	0.6	264	75.2	0.2
65	75.6	0.6	165	75.6	0.6	265	75.4	0.4
66	75.7	0.7	166	75.7	0.7	266	75.4	0.4
67	75.7	0.7	167	75.7	0.7	267	75.6	0.6
68	75.7	0.7	168	75.7	0.7	268	75.7	0.7
69	75.7	0.7	169	75.7	0.7	269	75.7	0.7
70	76.1	1.1	170	75.9	0.9	270	75.9	0.9
71	75.6	0.6	171	75.0	0.0	271	75.2	0.2
72	75.6	0.6	172	75.2	0.2	272	75.2	0.2
73	75.6	0.6	173	75.2	0.2	273	75.4	0.4
74	75.6	0.6	174	75.2	0.2	274	75.4	0.4
75	75.6	0.6	175	75.0	0.0	275	75.4	0.4
76	75.6	0.6	176	75.2	0.2	276	75.6	0.6
77	75.6	0.6	177	75.2	0.2	277	75.6	0.6
78	75.6	0.6	178	75.2	0.2	278	75.6	0.6
79	75.6	0.6	179	75.4	0.4	279	75.7	0.7
80	75.9	0.9	180	75.6	0.6	280	75.9	0.9
81	75.2	0.2	181	75.4	0.4	281	74.7	-0.3
82	75.2	0.2	182	75.2	0.2	282	74.7	-0.3
83	75.2	0.2	183	75.2	0.2	283	74.8	-0.2
84	75.2	0.2	184	75.4	0.4	284	74.8	-0.2
85	75.2	0.2	185	75.2	0.2	285	75.0	0.0
86	75.4	0.4	186	75.6	0.6	286	75.0	0.0
87	75.6	0.6	187	75.6	0.6	287	75.2	0.2
88	75.6	0.6	188	75.7	0.7	288	75.2	0.2
89	75.7	0.7	189	75.7	0.7	289	75.4	0.4
90	75.9	0.9	190	75.9	0.9	290	75.6	0.6
91	75.4	0.4	191	75.0	0.0	291	74.8	-0.2
92	75.2	0.2	192	75.2	0.2	292	74.7	-0.3
93	75.4	0.4	193	75.2	0.2	293	75.0	0.0
94	75.4	0.4	194	75.2	0.2	294	75.0	0.0
95	75.4	0.4	195	75.2	0.2	295	75.0	0.0
96	75.4	0.4	196	75.2	0.2	296	75.2	0.2
97	75.6	0.6	197	75.4	0.4	297	75.2	0.2
98	75.6	0.6	198	75.4	0.4	298	75.2	0.2
99	75.3	0.3	199	75.2	0.2	299	74.9	-0.1
100	75.3	0.3	200	75.2	0.2	300	75.1	0.1

Range for 75°F Signal: **+1.3/-0.3**
Allowable range: ±1.8

Within specification for this temperature? Yes

Performed by: Mike Day

Mgr. Fire Resistance — 4/25/05
Title — Date

Approved by:

President — 4-25-05
Title — Date

Channel Verification for Yokogawa 300 Channel

Serial No.: 48JF0082

Calibrator Used: SNT156701

Temperature Setting (°F): 150.0

Channel No.	Reading (°F)	+/-	Channel No.	Reading (°F)	+/-	Channel No.	Reading (°F)	+/-
1	150.4	0.4	101	150.3	0.3	201	149.9	-0.1
2	150.3	0.3	102	150.3	0.3	202	149.9	-0.1
3	150.3	0.3	103	150.3	0.3	203	150.1	0.1
4	150.3	0.3	104	150.3	0.3	204	150.3	0.3
5	150.3	0.3	105	150.3	0.3	205	150.3	0.3
6	150.3	0.3	106	150.3	0.3	206	150.3	0.3
7	150.3	0.3	107	150.4	0.4	207	150.3	0.3
8	150.4	0.4	108	150.4	0.4	208	150.3	0.3
9	150.6	0.6	109	150.6	0.6	209	150.4	0.4
10	150.8	0.8	110	150.8	0.8	210	150.8	0.8
11	150.3	0.3	111	150.1	0.1	211	149.9	-0.1
12	150.3	0.3	112	150.3	0.3	212	149.9	-0.1
13	150.3	0.3	113	150.1	0.1	213	149.9	-0.1
14	150.3	0.3	114	150.3	0.3	214	150.1	0.1
15	150.3	0.3	115	150.3	0.3	215	150.1	0.1
16	150.3	0.3	116	150.4	0.4	216	150.1	0.1
17	150.3	0.3	117	150.4	0.4	217	150.3	0.3
18	150.3	0.3	118	150.4	0.4	218	150.3	0.3
19	150.3	0.3	119	150.4	0.4	219	150.3	0.3
20	150.8	0.8	120	150.8	0.8	220	150.6	0.6
21	150.3	0.3	121	150.4	0.4	221	149.7	-0.3
22	150.3	0.3	122	150.3	0.3	222	149.9	-0.1
23	150.3	0.3	123	150.3	0.3	223	150.1	0.1
24	150.3	0.3	124	150.3	0.3	224	150.1	0.1
25	150.4	0.4	125	150.4	0.4	225	149.9	-0.1
26	150.4	0.4	126	150.4	0.4	226	149.9	-0.1
27	150.4	0.4	127	150.4	0.4	227	150.1	0.1
28	150.4	0.4	128	150.4	0.4	228	150.3	0.3
29	150.6	0.6	129	150.6	0.6	229	150.3	0.3
30	150.8	0.8	130	151.0	1.0	230	150.3	0.3
31	150.4	0.4	131	149.9	-0.1	231	149.7	-0.3
32	150.3	0.3	132	149.9	-0.1	232	149.7	-0.3
33	150.4	0.4	133	149.9	-0.1	233	149.7	-0.3
34	150.3	0.3	134	150.1	0.1	234	150.1	0.1
35	150.3	0.3	135	150.1	0.1	235	150.1	0.1
36	150.3	0.3	136	150.1	0.1	236	150.1	0.1
37	150.4	0.4	137	150.1	0.1	237	150.1	0.1
38	150.4	0.4	138	150.3	0.3	238	150.3	0.3
39	150.4	0.4	139	150.3	0.3	239	150.3	0.3
40	150.8	0.8	140	150.6	0.6	240	150.6	0.6
41	149.7	-0.3	141	149.7	-0.3	241	150.4	0.4
42	149.9	-0.1	142	149.7	-0.3	242	150.3	0.3
43	149.9	-0.1	143	149.9	-0.1	243	150.3	0.3
44	149.9	-0.1	144	149.9	-0.1	244	150.3	0.3
45	150.1	0.1	145	149.9	-0.1	245	150.3	0.3
46	150.1	0.1	146	150.1	0.1	246	150.3	0.3
47	150.3	0.3	147	150.1	0.1	247	150.4	0.4
48	150.1	0.1	148	150.3	0.3	248	150.6	0.6
49	150.0	0.0	149	149.9	-0.1	249	150.3	0.3
50	150.1	0.1	150	149.9	-0.1	250	150.3	0.3
51	149.7	-0.3	151	150.3	0.3	251	150.3	0.3
52	149.9	-0.1	152	150.3	0.3	252	150.3	0.3
53	149.7	-0.3	153	150.3	0.3	253	150.3	0.3
54	149.9	-0.1	154	150.3	0.3	254	150.3	0.3

55	149.7	-0.3	155	150.4	0.4	255	150.3	0.3
56	150.1	0.1	156	150.4	0.4	256	150.3	0.3
57	149.9	-0.1	157	150.4	0.4	257	150.3	0.3
58	150.1	0.1	158	150.6	0.6	258	150.3	0.3
59	150.1	0.1	159	150.8	0.8	259	150.4	0.4
60	150.3	0.3	160	151.0	1.0	260	150.8	0.8
61	150.3	0.3	161	150.3	0.3	261	150.3	0.3
62	150.3	0.3	162	150.3	0.3	262	150.3	0.3
63	150.3	0.3	163	150.3	0.3	263	150.3	0.3
64	150.3	0.3	164	150.3	0.3	264	150.3	0.3
65	150.3	0.3	165	150.3	0.3	265	150.4	0.4
66	150.3	0.3	166	150.3	0.3	266	150.4	0.4
67	150.3	0.3	167	150.4	0.4	267	150.4	0.4
68	150.6	0.6	168	150.4	0.4	268	150.8	0.8
69	150.8	0.8	169	150.8	0.8	269	150.8	0.8
70	150.8	0.8	170	151.0	1.0	270	151.0	1.0
71	150.4	0.4	171	149.9	-0.1	271	150.1	0.1
72	150.3	0.3	172	149.9	-0.1	272	150.1	0.1
73	150.3	0.3	173	150.1	0.1	273	150.1	0.1
74	150.3	0.3	174	149.9	-0.1	274	150.3	0.3
75	150.3	0.3	175	149.9	-0.1	275	150.3	0.3
76	150.4	0.4	176	149.9	-0.1	276	150.4	0.4
77	150.4	0.4	177	150.1	0.1	277	150.4	0.4
78	150.4	0.4	178	150.1	0.1	278	150.4	0.4
79	150.6	0.6	179	150.3	0.3	279	150.6	0.6
80	150.8	0.8	180	150.4	0.4	280	150.8	0.8
81	150.3	0.3	181	150.3	0.3	281	149.7	-0.3
82	150.3	0.3	182	150.3	0.3	282	149.7	-0.3
83	150.3	0.3	183	150.3	0.3	283	149.7	-0.3
84	150.3	0.3	184	150.3	0.3	284	149.7	-0.3
85	150.3	0.3	185	150.3	0.3	285	149.7	-0.3
86	150.4	0.4	186	150.3	0.3	286	150.1	0.1
87	150.4	0.4	187	150.3	0.3	287	150.1	0.1
88	150.6	0.6	188	150.4	0.4	288	150.1	0.1
89	150.6	0.6	189	150.6	0.6	289	150.3	0.3
90	150.8	0.8	190	150.8	0.8	290	150.4	0.4
91	150.3	0.3	191	150.1	0.1	291	149.7	-0.3
92	150.3	0.3	192	150.1	0.1	292	149.7	-0.3
93	150.4	0.4	193	150.3	0.3	293	149.7	-0.3
94	150.4	0.4	194	150.3	0.3	294	149.7	-0.3
95	150.4	0.4	195	150.3	0.3	295	149.7	-0.3
96	150.4	0.4	196	150.3	0.3	296	149.9	-0.1
97	150.4	0.4	197	150.3	0.3	297	150.1	0.1
98	150.4	0.4	198	150.4	0.4	298	150.3	0.3
99	150.4	0.4	199	150.2	0.2	299	149.7	-0.3
100	150.4	0.4	200	150.3	0.3	300	149.8	-0.2

Range for 150°F Signal: **+1/-0.3**
Allowable range: ±1.8

Within specification for this temperature? Yes

Performed by: Mike Day

MD

Mgr. Fire Resistance — 4/25/05
Title — Date

Approved by:

President — 4-25-05
Title — Date

Channel Verification for Yokogawa 300 Channel

Serial No.: 48JF0082

Calibrator Used: SNT156701

Temperature Setting (°F): 300.0

Channel No.	Reading (°F)	+/-	Channel No.	Reading (°F)	+/-	Channel No.	Reading (°F)	+/-
1	300.2	0.2	101	300.2	0.2	201	299.8	-0.2
2	300.2	0.2	102	300.2	0.2	202	299.8	-0.2
3	300.2	0.2	103	300.2	0.2	203	300.0	0.0
4	300.2	0.2	104	300.2	0.2	204	300.0	0.0
5	300.2	0.2	105	300.4	0.4	205	300.2	0.2
6	300.2	0.2	106	300.4	0.4	206	300.2	0.2
7	300.2	0.2	107	300.6	0.6	207	300.4	0.4
8	300.4	0.4	108	300.6	0.6	208	300.4	0.4
9	300.6	0.6	109	300.6	0.6	209	300.6	0.6
10	300.7	0.7	110	300.7	0.7	210	300.6	0.6
11	300.0	0.0	111	299.8	-0.2	211	299.7	-0.3
12	300.0	0.0	112	300.0	0.0	212	299.8	-0.2
13	300.0	0.0	113	300.0	0.0	213	300.0	0.0
14	300.0	0.0	114	300.2	0.2	214	299.8	-0.2
15	300.0	0.0	115	300.2	0.2	215	299.8	-0.2
16	300.2	0.2	116	300.2	0.2	216	300.0	0.0
17	300.2	0.2	117	300.2	0.2	217	300.0	0.0
18	300.2	0.2	118	300.2	0.2	218	300.0	0.0
19	300.2	0.2	119	300.4	0.4	219	300.2	0.2
20	300.7	0.7	120	300.7	0.7	220	300.2	0.2
21	300.2	0.2	121	300.4	0.4	221	299.5	-0.5
22	300.2	0.2	122	300.2	0.2	222	299.5	-0.5
23	300.2	0.2	123	300.2	0.2	223	299.7	-0.3
24	300.2	0.2	124	300.4	0.4	224	299.5	-0.5
25	300.2	0.2	125	300.6	0.6	225	300.0	0.0
26	300.2	0.2	126	300.4	0.4	226	300.0	0.0
27	300.2	0.2	127	300.6	0.6	227	300.0	0.0
28	300.2	0.2	128	300.7	0.7	228	300.2	0.2
29	300.4	0.4	129	300.7	0.7	229	300.2	0.2
30	300.4	0.4	130	300.9	0.9	230	300.6	0.6
31	300.2	0.2	131	300.0	0.0	231	299.7	-0.3
32	300.2	0.2	132	300.0	0.0	232	299.8	-0.2
33	300.2	0.2	133	300.0	0.0	233	299.8	-0.2
34	300.2	0.2	134	300.0	0.0	234	299.8	-0.2
35	300.2	0.2	135	300.2	0.2	235	300.0	0.0
36	300.2	0.2	136	300.0	0.0	236	300.2	0.2
37	300.4	0.4	137	300.2	0.2	237	300.2	0.2
38	300.4	0.4	138	300.2	0.2	238	300.2	0.2
39	300.6	0.6	139	300.2	0.2	239	300.6	0.6
40	300.7	0.7	140	300.4	0.4	240	300.7	0.7
41	300.0	0.0	141	299.8	-0.2	241	300.2	0.2
42	299.7	-0.3	142	299.8	-0.2	242	300.2	0.2
43	299.8	-0.2	143	300.0	0.0	243	300.2	0.2
44	300.0	0.0	144	300.0	0.0	244	300.2	0.2
45	300.0	0.0	145	300.0	0.0	245	300.2	0.2
46	300.0	0.0	146	300.0	0.0	246	300.2	0.2
47	300.0	0.0	147	300.2	0.2	247	300.4	0.4
48	300.0	0.0	148	300.2	0.2	248	300.6	0.6
49	300.0	0.0	149	300.0	0.0	249	300.2	0.2
50	300.0	0.0	150	300.0	0.0	250	300.2	0.2
51	299.8	-0.2	151	300.2	0.2	251	300.0	0.0
52	300.0	0.0	152	300.2	0.2	252	300.0	0.0
53	299.8	-0.2	153	300.2	0.2	253	300.0	0.0
54	300.0	0.0	154	300.2	0.2	254	300.0	0.0
55	300.2	0.2	155	300.2	0.2	255	300.0	0.0
56	300.2	0.2	156	300.2	0.2	256	300.2	0.2

57	300.2	0.2	157	300.4	0.4	257	300.2	0.2
58	300.2	0.2	158	300.6	0.6	258	300.2	0.2
59	300.2	0.2	159	300.7	0.7	259	300.2	0.2
60	300.6	0.6	160	300.9	0.9	260	300.7	0.7
61	300.2	0.2	161	300.2	0.2	261	300.2	0.2
62	300.2	0.2	162	300.2	0.2	262	300.2	0.2
63	300.2	0.2	163	300.2	0.2	263	300.2	0.2
64	300.2	0.2	164	300.2	0.2	264	300.2	0.2
65	300.4	0.4	165	300.2	0.2	265	300.2	0.2
66	300.4	0.4	166	300.2	0.2	266	300.2	0.2
67	300.4	0.4	167	300.2	0.2	267	300.2	0.2
68	300.6	0.6	168	300.2	0.2	268	300.4	0.4
69	300.7	0.7	169	300.4	0.4	269	300.6	0.6
70	300.7	0.7	170	300.7	0.7	270	300.7	0.7
71	300.2	0.2	171	299.7	-0.3	271	299.8	-0.2
72	300.2	0.2	172	299.8	-0.2	272	299.8	-0.2
73	300.2	0.2	173	299.8	-0.2	273	300.0	0.0
74	300.2	0.2	174	299.8	-0.2	274	300.0	0.0
75	300.2	0.2	175	300.0	0.0	275	300.2	0.2
76	300.2	0.2	176	300.0	0.0	276	300.2	0.2
77	300.2	0.2	177	300.0	0.0	277	300.2	0.2
78	300.2	0.2	178	300.2	0.2	278	300.2	0.2
79	300.4	0.4	179	300.2	0.2	279	300.4	0.4
80	300.7	0.7	180	300.6	0.6	280	300.6	0.6
81	300.2	0.2	181	300.2	0.2	281	299.3	-0.7
82	300.2	0.2	182	300.2	0.2	282	299.5	-0.5
83	300.2	0.2	183	300.2	0.2	283	299.5	-0.5
84	300.2	0.2	184	300.2	0.2	284	299.5	-0.5
85	300.2	0.2	185	300.2	0.2	285	299.7	-0.3
86	300.2	0.2	186	300.2	0.2	286	299.7	-0.3
87	300.2	0.2	187	300.2	0.2	287	299.8	-0.2
88	300.4	0.4	188	300.2	0.2	288	299.8	-0.2
89	300.4	0.4	189	300.6	0.6	289	300.2	0.2
90	300.7	0.7	190	300.7	0.7	290	300.2	0.2
91	300.2	0.2	191	300.2	0.2	291	299.5	-0.5
92	300.2	0.2	192	300.2	0.2	292	299.5	-0.5
93	300.2	0.2	193	300.2	0.2	293	299.7	-0.3
94	300.2	0.2	194	300.2	0.2	294	299.7	-0.3
95	300.2	0.2	195	300.2	0.2	295	299.7	-0.3
96	300.2	0.2	196	300.2	0.2	296	299.8	-0.2
97	300.4	0.4	197	300.2	0.2	297	300.0	0.0
98	300.4	0.4	198	300.4	0.4	298	300.2	0.2
99	300.2	0.2	199	300.2	0.2	299	299.6	-0.4
100	300.2	0.2	200	300.2	0.2	300	299.7	-0.3

Range for 300°F Signal: **+0.9/-0.7**

Allowable range ±1.9

Within specification for this temperature? Yes

Performed by: Mike Day

Mgr. Fire Resistance — Title

4/25/05 — Date

MD

Approved by:

President — Title

4-25-05 — Date

Channel Verification for Yokogawa 300 Channel

Serial No.: 48JF0082

Calibrator Used: SNT156701

Temperature Setting (°F): 400.0

Channel No.	Reading (°F)	+/-	Channel No.	Reading (°F)	+/-	Channel No.	Reading (°F)	+/-
1	400.3	0.3	101	400.3	0.3	201	400.1	0.1
2	400.3	0.3	102	400.3	0.3	202	400.1	0.1
3	400.3	0.3	103	400.3	0.3	203	400.1	0.1
4	400.3	0.3	104	400.3	0.3	204	400.1	0.1
5	400.3	0.3	105	400.3	0.3	205	400.3	0.3
6	400.3	0.3	106	400.6	0.6	206	400.3	0.3
7	400.3	0.3	107	400.5	0.5	207	400.3	0.3
8	400.3	0.3	108	400.6	0.6	208	400.3	0.3
9	400.5	0.5	109	400.8	0.8	209	400.5	0.5
10	400.8	0.8	110	400.8	0.8	210	400.8	0.8
11	399.9	-0.1	111	400.1	0.1	211	399.7	-0.3
12	399.9	-0.1	112	400.3	0.3	212	399.9	-0.1
13	399.9	-0.1	113	400.3	0.3	213	400.1	0.1
14	399.9	-0.1	114	400.3	0.3	214	400.1	0.1
15	399.9	-0.1	115	400.3	0.3	215	400.1	0.1
16	400.1	0.1	116	400.3	0.3	216	400.1	0.1
17	400.1	0.1	117	400.3	0.3	217	400.3	0.3
18	400.3	0.3	118	400.6	0.6	218	400.3	0.3
19	400.3	0.3	119	400.8	0.8	219	400.3	0.3
20	400.5	0.5	120	400.8	0.8	220	400.5	0.5
21	400.3	0.3	121	400.5	0.5	221	399.7	-0.3
22	400.1	0.1	122	400.3	0.3	222	399.7	-0.3
23	400.1	0.1	123	400.3	0.3	223	399.7	-0.3
24	400.1	0.1	124	400.3	0.3	224	399.9	-0.1
25	399.9	-0.1	125	400.5	0.5	225	399.9	-0.1
26	400.1	0.1	126	400.5	0.5	226	399.9	-0.1
27	400.1	0.1	127	400.5	0.5	227	399.9	-0.1
28	400.3	0.3	128	400.6	0.6	228	400.1	0.1
29	400.5	0.5	129	400.8	0.8	229	400.3	0.3
30	400.6	0.6	130	401.0	1.0	230	400.3	0.3
31	400.3	0.3	131	399.9	-0.1	231	399.6	-0.4
32	400.3	0.3	132	399.9	-0.1	232	399.7	-0.3
33	400.3	0.3	133	399.9	-0.1	233	399.7	-0.3
34	400.3	0.3	134	399.9	-0.1	234	399.7	-0.3
35	400.6	0.6	135	400.1	0.1	235	399.9	-0.1
36	400.6	0.6	136	400.1	0.1	236	400.1	0.1
37	400.6	0.6	137	400.3	0.3	237	400.1	0.1
38	400.6	0.6	138	400.3	0.3	238	400.3	0.3
39	400.8	0.8	139	400.3	0.3	239	400.3	0.3
40	400.8	0.8	140	400.6	0.6	240	400.5	0.5
41	399.9	-0.1	141	399.7	-0.3	241	400.6	0.6
42	400.1	0.1	142	399.7	-0.3	242	400.5	0.5
43	400.1	0.1	143	399.7	-0.3	243	400.6	0.6
44	400.3	0.3	144	399.7	-0.3	244	400.6	0.6
45	400.3	0.3	145	399.7	-0.3	245	400.5	0.5
46	400.3	0.3	146	399.9	-0.1	246	400.5	0.5
47	400.3	0.3	147	399.9	-0.1	247	400.6	0.6
48	400.3	0.3	148	400.1	0.1	248	400.6	0.6
49	400.3	0.3	149	399.7	-0.3	249	400.6	0.6
50	400.3	0.3	150	399.8	-0.2	250	400.6	0.6
51	399.9	-0.1	151	400.3	0.3	251	400.1	0.1
52	400.1	0.1	152	400.3	0.3	252	400.1	0.1
53	400.1	0.1	153	400.3	0.3	253	400.1	0.1
54	400.1	0.1	154	400.3	0.3	254	400.1	0.1

55	400.3	0.3	155	400.3	0.3	255	400.3	0.3
56	400.3	0.3	156	400.3	0.3	256	400.3	0.3
57	400.3	0.3	157	400.5	0.5	257	400.3	0.3
58	400.3	0.3	158	400.6	0.6	258	400.3	0.3
59	400.3	0.3	159	400.6	0.6	259	400.3	0.3
60	400.5	0.5	160	400.8	0.8	260	400.6	0.6
61	400.3	0.3	161	400.3	0.3	261	400.3	0.3
62	400.3	0.3	162	400.3	0.3	262	400.3	0.3
63	400.3	0.3	163	400.3	0.3	263	400.3	0.3
64	400.3	0.3	164	400.3	0.3	264	400.3	0.3
65	400.3	0.3	165	400.3	0.3	265	400.5	0.5
66	400.3	0.3	166	400.3	0.3	266	400.5	0.5
67	400.5	0.5	167	400.3	0.3	267	400.5	0.5
68	400.5	0.5	168	400.5	0.5	268	400.6	0.6
69	400.8	0.8	169	400.6	0.6	269	400.8	0.8
70	400.8	0.8	170	400.8	0.8	270	400.8	0.8
71	400.3	0.3	171	399.7	-0.3	271	399.9	-0.1
72	400.3	0.3	172	399.9	-0.1	272	399.9	-0.1
73	400.3	0.3	173	399.9	-0.1	273	399.9	-0.1
74	400.3	0.3	174	399.9	-0.1	274	399.9	-0.1
75	400.3	0.3	175	400.1	0.1	275	400.3	0.3
76	400.3	0.3	176	400.3	0.3	276	400.5	0.5
77	400.3	0.3	177	400.3	0.3	277	400.5	0.5
78	400.5	0.5	178	400.3	0.3	278	400.5	0.5
79	400.5	0.5	179	400.3	0.3	279	400.6	0.6
80	400.8	0.8	180	400.6	0.6	280	400.6	0.6
81	400.3	0.3	181	400.5	0.5	281	399.6	-0.4
82	400.3	0.3	182	400.3	0.3	282	399.6	-0.4
83	400.3	0.3	183	400.3	0.3	283	399.6	-0.4
84	400.3	0.3	184	400.3	0.3	284	399.7	-0.3
85	400.3	0.3	185	400.3	0.3	285	399.9	-0.1
86	400.3	0.3	186	400.3	0.3	286	399.9	-0.1
87	400.3	0.3	187	400.5	0.5	287	399.9	-0.1
88	400.6	0.6	188	400.6	0.6	288	399.9	-0.1
89	400.6	0.6	189	400.8	0.8	289	400.1	0.1
90	400.8	0.8	190	401.0	1.0	290	400.3	0.3
91	400.3	0.3	191	400.3	0.3	291	399.7	-0.3
92	400.3	0.3	192	400.1	0.1	292	399.7	-0.3
93	400.3	0.3	193	400.3	0.3	293	399.7	-0.3
94	400.3	0.3	194	400.3	0.3	294	399.7	-0.3
95	400.3	0.3	195	400.3	0.3	295	399.9	-0.1
96	400.3	0.3	196	400.3	0.3	296	400.1	0.1
97	400.6	0.6	197	400.3	0.3	297	400.3	0.3
98	400.5	0.5	198	400.3	0.3	298	400.3	0.3
99	400.3	0.3	199	400.2	0.2	299	399.8	-0.2
100	400.3	0.3	200	400.3	0.3	300	399.9	-0.1

Range for 400°F Signal: **+1/-0.4**

Allowable range: ±2.0

Within specification for this temperature? Yes

Performed by: Mike Day

Mgr. Fire Resistance — Title

4/25/05 — Date

Approved by:

President — Title

4-25-05 — Date

Channel Verification for Yokogawa 300 Channel

Serial No.: 48JF0082

Calibrator Used: SNT156701

Temperature Setting (°F): 1000.0

Channel No.	Reading (°F)	+/-	Channel No.	Reading (°F)	+/-	Channel No.	Reading (°F)	+/-
1	1000.0	0.0	101	1000.0	0.0	201	1000.0	0.0
2	1000.0	0.0	102	1000.0	0.0	202	1000.2	0.2
3	1000.0	0.0	103	1000.0	0.0	203	1000.2	0.2
4	999.9	-0.1	104	1000.0	0.0	204	1000.2	0.2
5	1000.0	0.0	105	1000.0	0.0	205	1000.4	0.4
6	1000.0	0.0	106	1000.2	0.2	206	1000.4	0.4
7	1000.0	0.0	107	1000.2	0.2	207	1000.6	0.6
8	1000.0	0.0	108	1000.6	0.6	208	1000.6	0.6
9	1000.2	0.2	109	1000.6	0.6	209	1000.6	0.6
10	1000.6	0.6	110	1000.8	0.8	210	1000.9	0.9
11	1000.0	0.0	111	1000.0	0.0	211	1000.0	0.0
12	1000.0	0.0	112	1000.2	0.2	212	1000.0	0.0
13	999.9	-0.1	113	1000.2	0.2	213	1000.0	0.0
14	1000.0	0.0	114	1000.2	0.2	214	1000.0	0.0
15	1000.0	0.0	115	1000.2	0.2	215	1000.0	0.0
16	1000.0	0.0	116	1000.2	0.2	216	1000.0	0.0
17	1000.0	0.0	117	1000.4	0.4	217	1000.2	0.2
18	1000.0	0.0	118	1000.4	0.4	218	1000.2	0.2
19	1000.0	0.0	119	1000.6	0.6	219	1000.6	0.6
20	1000.4	0.4	120	1000.6	0.6	220	1000.6	0.6
21	1000.0	0.0	121	1000.6	0.6	221	999.9	-0.1
22	1000.0	0.0	122	1000.4	0.4	222	999.9	-0.1
23	1000.0	0.0	123	1000.4	0.4	223	1000.0	0.0
24	1000.0	0.0	124	1000.4	0.4	224	1000.0	0.0
25	999.9	-0.1	125	1000.4	0.4	225	1000.0	0.0
26	1000.0	0.0	126	1000.4	0.4	226	1000.0	0.0
27	1000.0	0.0	127	1000.6	0.6	227	1000.2	0.2
28	1000.0	0.0	128	1000.6	0.6	228	1000.2	0.2
29	1000.0	0.0	129	1000.6	0.6	229	1000.4	0.4
30	1000.4	0.4	130	1000.9	0.9	230	1000.6	0.6
31	1000.4	0.4	131	1000.0	0.0	231	1000.0	0.0
32	1000.4	0.4	132	1000.0	0.0	232	1000.0	0.0
33	1000.4	0.4	133	1000.0	0.0	233	1000.0	0.0
34	1000.6	0.6	134	1000.0	0.0	234	1000.0	0.0
35	1000.6	0.6	135	1000.0	0.0	235	1000.2	0.2
36	1000.6	0.6	136	1000.0	0.0	236	1000.2	0.2
37	1000.6	0.6	137	1000.0	0.0	237	1000.2	0.2
38	1000.6	0.6	138	1000.0	0.0	238	1000.4	0.4
39	1000.6	0.6	139	1000.2	0.2	239	1000.6	0.6
40	1000.8	0.8	140	1000.6	0.6	240	1000.6	0.6
41	999.9	-0.1	141	1000.0	0.0	241	1000.2	0.2
42	1000.0	0.0	142	1000.0	0.0	242	1000.0	0.0
43	999.9	-0.1	143	1000.0	0.0	243	1000.0	0.0
44	1000.0	0.0	144	1000.0	0.0	244	1000.0	0.0
45	1000.0	0.0	145	1000.2	0.2	245	1000.0	0.0
46	1000.0	0.0	146	1000.2	0.2	246	1000.2	0.2
47	1000.2	0.2	147	1000.2	0.2	247	1000.4	0.4
48	1000.2	0.2	148	1000.4	0.4	248	1000.6	0.6
49	1000.0	0.0	149	1000.1	0.1	249	1000.0	0.0
50	1000.1	0.1	150	1000.1	0.1	250	1000.1	0.1
51	999.9	-0.1	151	1000.4	0.4	251	999.9	-0.1
52	1000.0	0.0	152	1000.2	0.2	252	999.9	-0.1
53	1000.0	0.0	153	1000.4	0.4	253	999.7	-0.3
54	999.9	-0.1	154	1000.4	0.4	254	999.9	-0.1
55	1000.0	0.0	155	1000.4	0.4	255	999.9	-0.1
56	1000.0	0.0	156	1000.4	0.4	256	1000.0	0.0

57	1000.0	0.0	157	1000.4	0.4	257	1000.0	0.0
58	1000.2	0.2	158	1000.4	0.4	258	1000.0	0.0
59	1000.2	0.2	159	1000.6	0.6	259	1000.2	0.2
60	1000.4	0.4	160	1000.8	0.8	260	1000.6	0.6
61	1000.2	0.2	161	1000.2	0.2	261	1000.0	0.0
62	1000.2	0.2	162	1000.2	0.2	262	1000.0	0.0
63	1000.2	0.2	163	1000.2	0.2	263	1000.0	0.0
64	1000.2	0.2	164	1000.4	0.4	264	1000.0	0.0
65	1000.2	0.2	165	1000.4	0.4	265	1000.0	0.0
66	1000.4	0.4	166	1000.4	0.4	266	1000.0	0.0
67	1000.6	0.6	167	1000.4	0.4	267	1000.2	0.2
68	1000.6	0.6	168	1000.6	0.6	268	1000.2	0.2
69	1000.6	0.6	169	1000.6	0.6	269	1000.4	0.4
70	1000.9	0.9	170	1000.8	0.8	270	1000.6	0.6
71	1000.4	0.4	171	999.9	-0.1	271	999.7	-0.3
72	1000.4	0.4	172	999.9	-0.1	272	999.7	-0.3
73	1000.4	0.4	173	1000.0	0.0	273	999.7	-0.3
74	1000.4	0.4	174	1000.0	0.0	274	999.7	-0.3
75	1000.4	0.4	175	999.9	-0.1	275	1000.0	0.0
76	1000.4	0.4	176	1000.0	0.0	276	1000.0	0.0
77	1000.6	0.6	177	1000.2	0.2	277	1000.0	0.0
78	1000.6	0.6	178	1000.2	0.2	278	1000.2	0.2
79	1000.6	0.6	179	1000.2	0.2	279	1000.4	0.4
80	1000.8	0.8	180	1000.4	0.4	280	1000.6	0.6
81	1000.2	0.2	181	1000.6	0.6	281	999.7	-0.3
82	1000.2	0.2	182	1000.6	0.6	282	999.7	-0.3
83	1000.2	0.2	183	1000.6	0.6	283	999.7	-0.3
84	1000.2	0.2	184	1000.6	0.6	284	999.7	-0.3
85	1000.4	0.4	185	1000.4	0.4	285	999.7	-0.3
86	1000.4	0.4	186	1000.6	0.6	286	999.7	-0.3
87	1000.6	0.6	187	1000.6	0.6	287	999.7	-0.3
88	1000.6	0.6	188	1000.6	0.6	288	999.7	-0.3
89	1000.6	0.6	189	1000.8	0.8	289	1000.0	0.0
90	1000.8	0.8	190	1000.9	0.9	290	1000.0	0.0
91	1000.6	0.6	191	1000.0	0.0	291	999.7	-0.3
92	1000.4	0.4	192	1000.0	0.0	292	999.7	-0.3
93	1000.4	0.4	193	1000.0	0.0	293	999.7	-0.3
94	1000.4	0.4	194	1000.2	0.2	294	999.9	-0.1
95	1000.4	0.4	195	1000.4	0.4	295	999.9	-0.1
96	1000.4	0.4	196	1000.4	0.4	296	1000.0	0.0
97	1000.6	0.6	197	1000.6	0.6	297	1000.0	0.0
98	1000.6	0.6	198	1000.6	0.6	298	1000.0	0.0
99	1000.4	0.4	199	1000.2	0.2	299	999.8	-0.2
100	1000.4	0.4	200	1000.3	0.3	300	999.9	-0.1

Range for 1000°F Signal: **+0.9/-0.3**

Allowable range: ±2.3

Within specification for this temperature? Yes

Performed by: Mike Day

Mgr. Fire Resistance — 4/25/05 MD

Title — Date

Approved by:

President — 4-25-05

Title — Date

Channel Verification for Yokogawa 300 Channel

Serial No.: 48JF0082

Calibrator Used: SNT156701

Temperature Setting (°F): 2000.0

Channel No.	Reading (°F)	+/-	Channel No.	Reading (°F)	+/-	Channel No.	Reading (°F)	+/-
1	1999.9	-0.1	101	2000.5	0.5	201	2000.7	0.7
2	1999.8	-0.2	102	2000.7	0.7	202	2000.7	0.7
3	1999.8	-0.2	103	2000.7	0.7	203	2000.7	0.7
4	1999.8	-0.2	104	2000.7	0.7	204	2000.7	0.7
5	1999.8	-0.2	105	2000.7	0.7	205	2000.8	0.8
6	1999.8	-0.2	106	2001.0	1.0	206	2000.8	0.8
7	1999.9	-0.1	107	2001.0	1.0	207	2000.8	0.8
8	1999.9	-0.1	108	2001.0	1.0	208	2000.8	0.8
9	1999.9	-0.1	109	2001.0	1.0	209	2001.0	1.0
10	2000.3	0.3	110	2001.4	1.4	210	2001.0	1.0
11	1999.8	-0.2	111	2000.5	0.5	211	2000.3	0.3
12	1999.6	-0.4	112	2000.7	0.7	212	2000.1	0.1
13	1999.4	-0.6	113	2000.5	0.5	213	2000.3	0.3
14	1999.4	-0.6	114	2000.7	0.7	214	2000.3	0.3
15	1999.6	-0.4	115	2000.7	0.7	215	2000.5	0.5
16	1999.8	-0.2	116	2000.7	0.7	216	2000.5	0.5
17	1999.8	-0.2	117	2000.8	0.8	217	2000.7	0.7
18	1999.9	-0.1	118	2000.8	0.8	218	2000.7	0.7
19	1999.9	-0.1	119	2001.0	1.0	219	2000.7	0.7
20	2000.3	0.3	120	2001.2	1.2	220	2000.8	0.8
21	1999.9	-0.1	121	2000.7	0.7	221	2000.1	0.1
22	1999.8	-0.2	122	2000.7	0.7	222	2000.3	0.3
23	1999.8	-0.2	123	2000.7	0.7	223	2000.3	0.3
24	1999.8	-0.2	124	2000.7	0.7	224	2000.3	0.3
25	1999.6	-0.4	125	2000.7	0.7	225	2000.5	0.5
26	1999.6	-0.4	126	2000.7	0.7	226	2000.5	0.5
27	1999.6	-0.4	127	2000.8	0.8	227	2000.5	0.5
28	1999.8	-0.2	128	2000.8	0.8	228	2000.5	0.5
29	1999.9	-0.1	129	2001.0	1.0	229	2000.5	0.5
30	2000.1	0.1	130	2001.4	1.4	230	2000.7	0.7
31	2000.3	0.3	131	2000.3	0.3	231	1999.9	-0.1
32	2000.3	0.3	132	2000.1	0.1	232	2000.1	0.1
33	2000.3	0.3	133	2000.3	0.3	233	2000.1	0.1
34	2000.5	0.5	134	2000.3	0.3	234	2000.3	0.3
35	2000.7	0.7	135	2000.3	0.3	235	2000.3	0.3
36	2000.7	0.7	136	2000.3	0.3	236	2000.7	0.7
37	2000.7	0.7	137	2000.5	0.5	237	2000.7	0.7
38	2000.7	0.7	138	2000.5	0.5	238	2000.7	0.7
39	2000.7	0.7	139	2000.7	0.7	239	2000.8	0.8
40	2001.0	1.0	140	2000.8	0.8	240	2001.0	1.0
41	1999.9	-0.1	141	2000.1	0.1	241	2000.5	0.5
42	1999.8	-0.2	142	2000.1	0.1	242	2000.3	0.3
43	1999.8	-0.2	143	2000.1	0.1	243	2000.3	0.3
44	1999.8	-0.2	144	2000.1	0.1	244	2000.3	0.3
45	1999.8	-0.2	145	2000.1	0.1	245	2000.3	0.3
46	1999.9	-0.1	146	2000.1	0.1	246	2000.3	0.3
47	1999.9	-0.1	147	2000.3	0.3	247	2000.7	0.7
48	1999.9	-0.1	148	2000.5	0.5	248	2000.7	0.7
49	1999.8	-0.2	149	2000.1	0.1	249	2000.3	0.3
50	1999.9	-0.1	150	2000.1	0.1	250	2000.3	0.3
51	1999.8	-0.2	151	2000.5	0.5	251	1999.9	-0.1
52	1999.9	-0.1	152	2000.3	0.3	252	1999.9	-0.1
53	1999.9	-0.1	153	2000.3	0.3	253	1999.9	-0.1
54	1999.9	-0.1	154	2000.3	0.3	254	1999.9	-0.1
55	1999.9	-0.1	155	2000.5	0.5	255	1999.9	-0.1
56	2000.1	0.1	156	2000.5	0.5	256	2000.1	0.1

57	2000.1	0.1	157	2000.7	0.7	257	2000.1	0.1
58	2000.3	0.3	158	2000.7	0.7	258	2000.1	0.1
59	2000.5	0.5	159	2000.8	0.8	259	2000.5	0.5
60	2000.5	0.5	160	2001.0	1.0	260	2000.7	0.7
61	2000.7	0.7	161	2000.3	0.3	261	2000.1	0.1
62	2000.7	0.7	162	2000.3	0.3	262	2000.1	0.1
63	2000.7	0.7	163	2000.5	0.5	263	2000.1	0.1
64	2000.7	0.7	164	2000.3	0.3	264	2000.3	0.3
65	2000.7	0.7	165	2000.3	0.3	265	2000.5	0.5
66	2000.7	0.7	166	2000.3	0.3	266	2000.7	0.7
67	2000.7	0.7	167	2000.5	0.5	267	2000.7	0.7
68	2000.8	0.8	168	2000.7	0.7	268	2000.7	0.7
69	2001.0	1.0	169	2000.7	0.7	269	2000.7	0.7
70	2001.0	1.0	170	2000.8	0.8	270	2000.8	0.8
71	2000.7	0.7	171	1999.9	-0.1	271	1999.8	-0.2
72	2000.7	0.7	172	1999.9	-0.1	272	1999.9	-0.1
73	2000.7	0.7	173	2000.1	0.1	273	1999.9	-0.1
74	2000.7	0.7	174	2000.1	0.1	274	1999.9	-0.1
75	2000.5	0.5	175	2000.1	0.1	275	1999.9	-0.1
76	2000.5	0.5	176	2000.1	0.1	276	1999.9	-0.1
77	2000.7	0.7	177	2000.1	0.1	277	1999.9	-0.1
78	2000.7	0.7	178	2000.1	0.1	278	1999.9	-0.1
79	2000.8	0.8	179	2000.3	0.3	279	1999.9	-0.1
80	2001.0	1.0	180	2000.7	0.7	280	2000.3	0.3
81	2000.7	0.7	181	2000.8	0.8	281	1999.2	-0.8
82	2000.7	0.7	182	2000.8	0.8	282	1999.2	-0.8
83	2000.7	0.7	183	2000.7	0.7	283	1999.2	-0.8
84	2000.7	0.7	184	2000.7	0.7	284	1999.2	-0.8
85	2000.7	0.7	185	2000.8	0.8	285	1999.4	-0.6
86	2000.7	0.7	186	2001.0	1.0	286	1999.6	-0.4
87	2000.7	0.7	187	2001.0	1.0	287	1999.8	-0.2
88	2000.7	0.7	188	2001.0	1.0	288	1999.8	-0.2
89	2000.7	0.7	189	2001.0	1.0	289	1999.8	-0.2
90	2001.0	1.0	190	2001.6	1.6	290	1999.9	-0.1
91	2000.7	0.7	191	2000.7	0.7	291	1999.2	-0.8
92	2000.7	0.7	192	2000.7	0.7	292	1999.2	-0.8
93	2000.7	0.7	193	2000.7	0.7	293	1999.2	-0.8
94	2000.7	0.7	194	2000.7	0.7	294	1999.4	-0.6
95	2000.7	0.7	195	2000.7	0.7	295	1999.4	-0.6
96	2000.8	0.8	196	2000.7	0.7	296	1999.4	-0.6
97	2000.8	0.8	197	2000.8	0.8	297	1999.8	-0.2
98	2001.0	1.0	198	2000.8	0.8	298	1999.8	-0.2
99	2000.7	0.7	199	2000.7	0.7	299	1999.3	-0.7
100	2000.7	0.7	200	2000.7	0.7	300	1999.4	-0.6

Range for 2000°F Signal: **+1.6/-0.8**

Allowable range: ±2.8

Within specification for this temperature? Yes

Performed by: Mike Dey

Mgr. Fire Resistance — 4/25/05

Title — Date

Approved by:

President — 4-25-05

Title — Date

Q/A RECEIVING REPORT

CLIENT/PROJECT NAME Omega Point Labs
CLIENT/PROJECT NUMBER OPC Equipment
RECEIVED FROM PMC
PROJECT LOCATION Omega Point Labs

REPORT NUMBER 2208 - OPC
DATE RECEIVED 10-27-00
DATE INSPECTED 10-27-00
INSPECTED BY: [illegible]

ITEM DESCRIPTION	P.O. NO.	QUANTITY Order	QUANTITY Rec'd	QUANTITY B.O.	I.D. NO.	CONM'D MATL Y/N	CERT. REC'D Y/N	CONTAINER INTEGRITY	EXCEPTIONS	ACCEPTANCE Accept	ACCEPTANCE Hold	ACCEPTANCE Reject	REMARKS
Teflon TC Wire	128014	20K'	21K'	0	RK-TA/TA-2A	Y	Y	Good	None	X			Spool #'s 00332520, 00332521 + 00332523

FORM
1/29/93

OMEGA POINT LABORATORIES
16015 SHADY FALLS RD.
ELMENDORF, TEXAS 78112
PH. (210) 635-8100
FAX (210) 635-8101

PURCHASE ORDER

12801Q

Date:9/27/00
Page: 1 of 1

Order From: PMC
680 Hayward Street
Manchester
NH 03103
603-622-3500

Deliver to: Omega Point Laboratories, Inc
16015 Shady Falls Road
Elmendorf
TX 78112-9784
(210) 635-8100

Vendor No: 0024

Your Item Number / Item Description	Our Reference	Qty Ordered	Units	Unit Cost	Extension
Fiberglass TC Wire KK-FB/FB-24 Recd 10-6-00	001	10.00	Thousand	$182.00	$1,820.00
Calibration Services	002	1.00	Each	207.00	207.00
Teflon TC Wire KK-TA/TA-24 Recd 10-27-00	003	20.00	Thousand	$350.00	$7,000.00
Calibration Services	004	1.00	Each	$105.00	$105.00

"See Special Instructions Regarding Purchasing Specifications for Quality Assurance Requirements."
QA Approval Dutton
Date 9-27-00

Please Quote Purchase Order Number on all correspondence.

SPECIAL INSTRUCTIONS: Please include Certificate of Conformance to attached Specification Sheet and Calibration Data traceable to NIST.

Subtotal:	$9,132.00
Freight:	0.00
Tax Amount:	707.73
Total Value:	$9,839.73

OMEGA POINT LABORATORIES
MATERIAL PURCHASING SPECIFICATIONS

SPECIFICATION NUMBER: MS- 12801Q-OPL

VENDOR: PMC Corporation

ITEM NO.	VENDOR PRODUCT NUMBER	PRODUCT DESCRIPTION
1.	KK-TA/TA-24	Teflon Coated Thermocouple Wire
2.	KK-FB/FB-24	Fiberglas Braided Thermocouple Wire
	KK-TE/TE-24	FEP Insulated Thermocouple Wire

Material as defined above shall be provided in accordance with the Critical Characteristics as listed below:

TEST	DESCRIPTION	SPECIFICATION RANGES MIN. - MAX.
ASTM E220-96	Std. Test Method for Calibration of Thermocouples by Comparison (Chromel/Alumel wire alloy)	Temp. Range +32°F to +545°F Special Limits of Error ± 2% °F Temp. Range +545°F to +2300°F Special Limits of Error ± .4%
ASTM E220-96	Std. Test Method for Calibration of Thermocouples by Comparison (Copper/Constantan wire alloy)	Temp. Range -85°F to +270°F Special Limits of Error ±.9%°F Temp. Range +270°F to +660°F Special Limits of Error ±.4%

QUALITY ASSURANCE REQUIREMENTS

1.0 QUALITY PROGRAM

Seller shall furnish this item in accordance with Quality Program approved by Omega Point Laboratories. Material specified herein is to be produced and tested in accordance with vendor quality standards, methods, guidelines and manufacturing instructions as defined in that Quality Program.

2.0 QUALITY VERIFICATION

Receiving Inspection - Buyer shall inspect items upon receipt to verify compliance with purchase order requirements. Rejected items shall be returned at seller's expense.

Document Review - Final acceptance shall be based on satisfactory review of required certifications and/or supporting documents.

3.0 CERTIFICATIONS

3.1 Certification that supplied materials comply with this material specification and listing Critical Characteristics shall be provided. This certificates shall reference Omega Point Labs purchase order number and specification number for all material furnished under this specification. This Certification shall be signed by the appropriate vendor representative.

3.2 The material furnished under this specification shall be a product that complies with the following:

3.2.1 Has been tested and passed all tests specified herein.

3.2.2 Manufacturing methods for this material have not changed. Vendor will advise Omega Point in writing of any changes in the manufacturing prior to material manufacture.

3.2.3 Raw materials used in the manufacture of this material meet Vendor specifications.

4.0 AUDITS/RIGHTS OF ACCESS

Omega Point Labs reserves the right to audit your facility to verify compliance with the purchase order and specification requirements with a minimum ten (10) day notice.

5.0 IDENTIFICATION

Seller shall identify each item with a unique traceability number by physical marking or tagging. These identification numbers shall be traceable to certifications and packing lists.

6.0 PACKING/SHIPPING

All materials shall be packaged in air tight, moisture free containers and shall be free of foreign substances such as dirt, oil, grease or other deleterious materials.

All materials shall be suitably crated, boxed or otherwise prepared for shipment to prevent damage during handling and shipping.

QUALITY ASSURANCE APPROVAL:

T. Patton

Title Sr Adm Asst.

Date 9-22-00

AVL Verification

Class: A

PMC A DIVISION OF ROCKBESTOS-SURPRENANT CABLE CORPORATION
680 HAYWARD STREET, MANCHESTER, NH 03103 (603) 622-3500
SPECIALIZING IN WIRE & CABLE FOR THE SENSOR INDUSTRY FAX (800) 639-5701

CERTIFICATE OF CALIBRATION

SPOOL #00332523

TO: OMEGA POINT LABS, INC.
16015 SHADY FALLS ROAD
ELMENDORF, TX 78112

Date: 10/19/00
Cust PO#: 12801Q
Job #: PSO049377-1

CALIBRATION RESULTS ARE TRACEABLE TO THE NATIONAL INSTITUTE OF STANDARDS AND TECHNOLOGY (NIST) AND MEET SPECIAL LIMITS DEVIATION TOLERANCES AS DEFINED IN ISA MC96.1 (FORMERLY ANSI) AND ASTM E 230. MS12801Q-OPL

TEST RESULTS FOR: PMC P/N: KK-TA/TA-24 Total Footage: 5220'

Test Temperature (°F)	Inside End	Outside End
200	+0.9	+0.5
400	-2.0	-2.0
600	-2.1	-2.2
800	-1.7	-1.9
1000	-2.3	-2.3

REPORTED RESULTS ARE DEVIATIONS FROM TEST TEMPERATURES. FOR CORRECTION FACTORS REVERSE THE SIGNS.

THE MATERIAL REFERENCED ABOVE HAS BEEN CALIBRATED UTILIZING TECHNIQUES CONSISTENT WITH THE GUIDELINES SET FORTH IN ANSI Z540-1 AND ASTM E-220. THIS IS TO CERTIFY THE MATERIAL FURNISHED ON THIS SHIPMENT ARE IN CONFORMANCE WITH THE REQUIREMENTS, SPECIFICATIONS, AND DRAWINGS OF THE ABOVE REFERENCED CUSTOMER PURCHASE ORDER. INSPECTION AND TEST RECORDS ARE ON FILE AND AVAILABLE FOR CUSTOMER REVIEW.

SECONDARY STANDARD THERMOCOUPLE: TYPE K
REEL # POS LEG: 291335
REEL # NEG LEG: 291346
CALIBRATION DATE: 3/17/00

NIST #: 263094C&A
263094B&D
(SINGLE USE THERMOCOUPLE FROM CALIBRATED REEL)

DIGITAL VOLT METER
MODEL: KAYE INSTRUMENTS: X1525S
SERIAL #: 306171
CALIBRATION DUE DATE: 12/28/00

NIST #:811/260640-98

ICE POINT THERMOCOUPLE REFERENCE
MODEL, KAYE INSTRUMENTS: K-170-SP
SERIAL #: 306178
CALIBRATION DUE DATE: 12/28/00

NIST #: G47407,G47325
811/G-47356-97

10-19-00
QUALITY ASSURANCE TECHNICIAN DATE

Edward Valyber 10/19/00
QUALITY ASSURANCE MANAGER DATE

MARMON
A member of the Marmon Group of companies

PMC Division of RSCC
680 Hayward Street
Manchester, NH 03103
Phone: (603) 622-3500 Fax: (603) 622-7023

Delivery Note
24390

Ship To: **OMEGA POINT LABS**
16015 SHADY FALLS ROAD
ELMENDORF, TX 78112

Attention: CLEDA

Ship Date	Customer P.O.	Ship Via	Due Date	
Oct 19 2000	**12801Q**	**UPS GROUND**	**OCT 27 2000**	**Page : 1**

Item and Description	Qty Ordered	Back ordered	Qty Shipped
1. KK-TA/TA-24 Calibrated @ 200, 400, 600, 800, 1000 F I/O Spool#: 00332522 00332520 00332523 00332521	20,000	0	21,030
2. CALIBRATION CHARGE CALIBRATION CHARGE	1	0	1

Reference: MS 12801Q-OPL

Q/A RECEIVING REPORT

OMEGA POINT LABORATORIES

CLIENT/PROJECT NAME Omega Point Labs
CLIENT/PROJECT NUMBER OPL Equipment
RECEIVED FROM PMC
PROJECT LOCATION Omega Point Labs

REPORT NUMBER 2263-OPL
DATE RECEIVED 9-4-01
DATE INSPECTED 9-4-01
INSPECTED BY: [signature]

ITEM DESCRIPTION	P.O. NO.	QUANTITY Order	QUANTITY Rec'd	QUANTITY B.O.	I.D. NO.	COND MATL Y/N	CERT. REC'D Y/N	CONTAINER INTEGRITY	EXCEPTIONS	ACCEPTANCE Accept	ACCEPTANCE Hold	ACCEPTANCE Reject	REMARKS
Teflon TC Wire	13262Q	25K'	27K'	Q	KK-TA/TA-24	Y	Y	Good	None	X			Spool #'s 00376345, 00376346, 00376347 and 00376348.

FORM
1/29/93

OMEGA POINT LABORATORIES
16015 SHADY FALLS RD.
ELMENDORF, TEXAS 78112
PH. (210) 635-8100
FAX (210) 635-8101

PURCHASE ORDER
13262Q

Date: 8/27/2001
Page: 1 of 1

Order From: PMC
680 Hayward Street
Manchester
NH 03103
603-622-3500

Deliver to: Omega Point Laboratories, Inc
16015 Shady Falls Road
Elmendorf
TX 78112
(210) 635-8100

Vendor No: 0024

Your Item Number / Item Description	Our Reference	Qty Ordered	Units	Unit Cost	Extension
Fiberglass TC Wire KK-TA/TA-24	001	25.00	Feet	$350.00	$8750.00
Calibration Services	002	1.00	Each	$207.00	$207.00

"See Special Instructions Regarding Purchasing Specifications for Quality Assurance Requirements."
QA Approval [signature]
Date 8-27-01

Please Quote Purchase Order Number on all correspondence.

Special Instructions: Please include Certificate of Conformance to attached Specification Sheet and Calibration Data traceable to NIST

Subtotal:	$8957.00
Freight:	0.00
Tax Amount:	0.00
Total Value:	$8957.00

OMEGA POINT LABORATORIES
MATERIAL PURCHASING SPECIFICATIONS

SPECIFICATION NUMBER: MS- 13262Q-OPL

VENDOR: PMC Corporation

ITEM NO.	VENDOR PRODUCT NUMBER	PRODUCT DESCRIPTION
1.	KK-TA/TA-24	Teflon Coated Thermocouple Wire
	KK-FB/FB-24	Fiberglas Braided Thermocouple Wire
	KK-TE/TE-24	FEP Insulated Thermocouple Wire

Material as defined above shall be provided in accordance with the Critical Characteristics as listed below:

TEST	DESCRIPTION	SPECIFICATION RANGES MIN. - MAX.
ASTM E220-96	Std. Test Method for Calibration of Thermocouples by Comparison	Temp. Range +32°F to +545°F Special Limits of Error ± 2% °F
	(Chromel/Alumel wire alloy)	Temp. Range +545°F to +2300°F Special Limits of Error ± .4%
ASTM E220-96	Std. Test Method for Calibration of Thermocouples by Comparison	Temp. Range -85°F to +270°F Special Limits of Error ±.9%°F
	(Copper/Constantan wire alloy)	Temp. Range +270°F to +660°F Special Limits of Error ±.4%

QUALITY ASSURANCE REQUIREMENTS

1.0 QUALITY PROGRAM

Seller shall furnish this item in accordance with Quality Program approved by Omega Point Laboratories. Material specified herein is to be produced and tested in accordance with vendor quality standards, methods, guidelines and manufacturing instructions as defined in that Quality Program.

2.0 QUALITY VERIFICATION

Receiving Inspection - Buyer shall inspect items upon receipt to verify compliance with purchase order requirements. Rejected items shall be returned at seller's expense.

Document Review - Final acceptance shall be based on satisfactory review of required certifications and/or supporting documents.

3.0 CERTIFICATIONS

3.1 Certification that supplied materials comply with this material specification and listing Critical Characteristics shall be provided. This certificates shall reference Omega Point Labs purchase order number and specification number for all material furnished under this specification. This Certification shall be signed by the appropriate vendor representative.

3.2 The material furnished under this specification shall be a product that complies with the following:

3.2.1 Has been tested and passed all tests specified herein.

3.2.2 Manufacturing methods for this material have not changed. Vendor will advise Omega Point in writing of any changes in the manufacturing prior to material manufacture.

3.2.3 Raw materials used in the manufacture of this material meet Vendor specifications.

4.0 AUDITS/RIGHTS OF ACCESS

Omega Point Labs reserves the right to audit your facility to verify compliance with the purchase order and specification requirements with a minimum ten (10) day notice.

5.0 IDENTIFICATION

Seller shall identify each item with a unique traceability number by physical marking or tagging. These identification numbers shall be traceable to certifications and packing lists.

6.0 PACKING/SHIPPING

All materials shall be packaged in air tight, moisture free containers and shall be free of foreign substances such as dirt, oil, grease or other deleterious materials.

All materials shall be suitably crated, boxed or otherwise prepared for shipment to prevent damage during handling and shipping.

QUALITY ASSURANCE APPROVAL:

Title QA Assistant

Date 8-27-01

AVL Verification

Class: A

PMC A DIVISION OF ROCKBESTOS-SURPRENANT CABLE CORPORATION
680 HAYWARD STREET, MANCHESTER, NH 03103 (603) 622-3500
SPECIALIZING IN WIRE & CABLE FOR THE SENSOR INDUSTRY FAX (800) 639-5701

CERTIFICATE OF CALIBRATION

SPOOL #00376343

TO: OMEGA POINT LABS, INC.
16015 SHADY FALLS ROAD
ELMENDORF, TX 78112

Date: 09/04/01
Cust PO#: 13262Q
Job #: PSO053900-1

CALIBRATION RESULTS ARE TRACEABLE TO THE NATIONAL INSTITUTE OF STANDARDS AND TECHNOLOGY (NIST) AND MEET SPECIAL LIMITS DEVIATION TOLERANCES AS DEFINED IN ISA MC96.1 (FORMERLY ANSI) AND ASTM E 230. MS12985Q-OPL

TEST RESULTS FOR: PMC P/N: KK-TA/TA-24 MS-13262Q-OPL Total Footage: 5000'

Test Temperature (°F)	Inside End	Outside End
200	+0.0	+0.0
400	+0.0	-0.1
600	-1.2	-1.3
800	-1.0	-1.1
1000	+0.8	+0.8

REPORTED RESULTS ARE DEVIATIONS FROM TEST TEMPERATURES. FOR CORRECTION FACTORS REVERSE THE SIGNS.

THE MATERIAL REFERENCED ABOVE HAS BEEN CALIBRATED UTILIZING TECHNIQUES CONSISTENT WITH THE GUIDELINES SET FORTH IN ANSI Z540-1 AND ASTM E-220. THIS IS TO CERTIFY THE MATERIAL FURNISHED ON THIS SHIPMENT ARE IN CONFORMANCE WITH THE REQUIREMENTS, SPECIFICATIONS, AND DRAWINGS OF THE ABOVE REFERENCED CUSTOMER PURCHASE ORDER. INSPECTION AND TEST RECORDS ARE ON FILE AND AVAILABLE FOR CUSTOMER REVIEW.

SECONDARY STANDARD THERMOCOUPLE: TYPE K
REEL # POS LEG: 291335
REEL # NEG LEG: 291346
CALIBRATION DATE: 3/17/00

NIST #: 263094C&A
263094B&D
(SINGLE USE THERMOCOUPLE FROM CALIBRATED REEL)

DIGITAL VOLT METER
MODEL: KAYE INSTRUMENTS: X1525S
SERIAL #: 306172
CALIBRATION DUE DATE: 07/25/01

FLUKE#: 752901

ICE POINT THERMOCOUPLE REFERENCE
MODEL, KAYE INSTRUMENTS: K-170-SP
SERIAL #: 306179
CALIBRATION DUE DATE: 07/25/01

NIST #: SPRT 256928

Sara Hadley 9-4-01
QUALITY ASSURANCE TECHNICIAN DATE

PFA Insulated Thermocouple Wire

PRODUCT CODE: TA/TA

Our customers have grown to expect only the highest quality products from PMC. We are continuously committed to meet the specific needs of industry and our customers. This construction includes Teflon* PFA insulataion extruded on the single conductors whi ⬇ are then laid parallel and jacketed with Teflon PFA.

Teflon PFA (perfluoroalkoxy) was released in 1972 by Dupont. It possesses similar properties of the other Teflon products such as outstanding electrical characteristics, resistance to virtually all chemicals and excellent flame resistance.

PFA is a true thermoplastic material extrudable by conventional means, and available in long continuous lengths. This construction provides flexibility and toughness with stress crack resistance, resistance to weather, non-aging characterisics, and low coefficient of friction for ease of pulling through conduit.

Like TFE, suggested upper continuous temperature is 500°F (260°C), however, it does not have TFE's solder iron resistance.

The thermocouple grade products shown are used to form temperature sensors and the extension grade products become the interconnecting link in the temperature sensing system.

You will find our qualified sales and engineering staff eager to assist in selecting a design to meet the requirements of your specific application. Variations of this construction are available upon request, including aluminum Mylar* to reduce noise problems found in so many of today's plants.

Typical applications include aircraft and automotive engine testing, rapid transit cables, and down hole cable in the oil industry.

*Registered trademark of E.I. DuPont Inc.

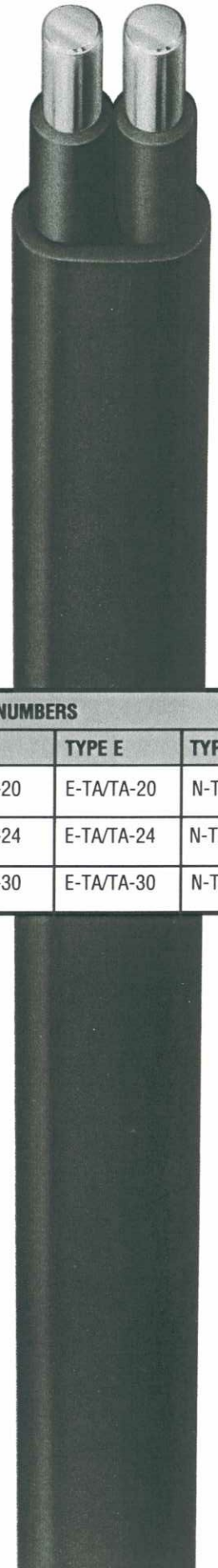

GRADE OF WIRE	GAUGE SIZE	WIRE TYPE	PART NUMBERS				
			TYPE J	TYPE K	TYPE T	TYPE E	TYPE N
THERMOCOUPLE	20	SOLID	J-TA/TA-20	K-TA/TA-20	T-TA/TA-20	E-TA/TA-20	N-TA/TA-20
THERMOCOUPLE	24	SOLID	J-TA/TA-24	K-TA/TA-24	T-TA/TA-24	E-TA/TA-24	N-TA/TA-24
THERMOCOUPLE	30	SOLID	J-TA/TA-30	K-TA/TA-30	T-TA/TA-30	E-TA/TA-30	N-TA/TA-30

The above part numbers represent the more popular constructions. However, other designs are available upon request.

PMC CORPORATION
57 Harvey Road
Londonderry, NH
03053

Tel. (603) 432-9473
FAX (800) 639-5701

© 1995 PMC Corporation

Color code & initial calibration tolerances for thermocouple wire >

THERMOCOUPLE TYPE		COLOR CODE		INITIAL CALIBRATION TOLERANCES		
WIRE ALLOYS	ANSI SYMBOL	+/- INDIVIDUAL	JACKET	TEMPERATURE RANGE	STANDARD LIMITS	SPECIAL LIMITS
*Iron (+) vs. Constantan™ (-)	J	WHITE/RED	BROWN	+ 32°F (0°C) to +545°F (+285°C) +545°F (+285°C) to +1400°F (+750°C)	± 4°F (2.2°C) ± .75%	± 2°F (1.1°C) ± .4%
Chromel™ (+) vs. *Alumel™ (-)	K	YELLOW/RED	BROWN	-330°F (-200°C) to -165°F (-110°C) -165°F (-110°C) to +32°F (0°C) +32°F (0°C) to +545°F (+285°C) +545°F (+285°C) to +2300°F (+1250°C)	± 2% ± 4°F (2.2°C) ± 4°F (2.2°C) ± .75%	± 2°F (1.1°C) ± .4%
Copper (+) vs. Constantan™ (-)	T	BLUE/RED	BROWN	- 330°F (-200°C) to -85°F (-65°C) -85°F (-65°C) to +270°F (+130°C) +270°F (+130°C) to +660°F (+350°C)	± 1.5% ±1.8°F (1°C) ± .75%	± .8% ± .9°F (.5°C) ± .4%
Chromel ™ (+) vs. Constantan ™ (-)	E	PURPLE/RED	BROWN	-330°F (-200°C) to -270°F (-170°C) -270°F (-170°C) to +480°F (+250°C) +480°F (+250°C) to +640°F (+340°C) +640°F (+340°C) to +1600°F (+900°C)	±1% ±3°F (1.7°C) ±3°F (1.7°C) ± .5%	± 1.8 °F (1°C) ± 1.8° F (1°C) ± .4% ± .4%
Nicrosil™ (+) vs. Nisil™ (-)	N	ORANGE/RED	BROWN	+ 32°F (0°C) to +545°F (+285°C) +545°F (+285°C) to +2300°F (+1250°C)	± 4°F (2.2°C) ± .75%	± 2° F(1.1°C) ± .4%

Color code and initial calibration tolerances for extension wire >

*Iron vs. Constantan™	JX	WHITE/RED	BLACK	+ 32°F (0°C) to +400°F (+200°C)	± 4°F (2.2°C)	± 2°F (1.1°C)
Chromel™ vs. *Alumel™	KX	YELLOW/RED	YELLOW	+32°F (0°C) to +400°F (+200°C)	± 4°F (2.2°C)	± 2°F (1.1°C)
Copper vs. Constantan™	TX	BLUE/RED	BLUE	-75°F (-60°C) to +210°F (+100°C)	± 2°F (1.1° C)	± 1°F (.5°C)
Chromel™ vs. Constantan™	EX	PURPLE/RED	PURPLE	+32°F (0°C) to +400°F (+200°C)	± 3°F (1.7°C)	± 2°F (1.1°C)
Nicrosil™ vs. Nisil™	NX	ORANGE/RED	ORANGE	+32°F (0°C) to +400°F (+200°C)	± 4°F (2.2°C)	± 2°F (1.1°C)
Copper vs. Copper Alloy	SX RX	BLACK/RED	GREEN	+75°F (+25°C) to +400°F (+200°C)	±9°F (5°C)	

* Magnetic
™Trade Mark, Hoskins Mfg. Co.

NOTE – Percent limits apply directly to temperatures in °C units, but for °F equivalents are applied to the numbers of °F above or below the ice point (+32°F).
(i.e.. Limit (°F) = (Temp. °F – 32°F) X Percentage)

Thermocouple wire cannot be expected to meet the limits of error at temperatures below the ice point unless specified at time of purchase.

TA/TA physical properties >

CHARACTERISTICS	INSULATION	JACKET
SPECIFIC GRAVITY	2.15	2.15
DUROMETER HARDNESS	55	55
TENSILE STRENGTH p.s.i. (min.)	4000 p.s.i.	4000 p.s.i.
ELONGATION %(min.)	300%	300%
MINIMUM BEND RADIUS	5 X O.D.	10 X O.D.
ABRASION RESISTANCE	VERY GOOD	VERY GOOD
CUT THROUGH RESISTANCE	GOOD	GOOD
MOISTURE RESISTANCE	EXCELLENT	EXCELLENT
SOLDER IRON RESISTANCE	VERY GOOD	VERY GOOD
SERVICE TEMPERATURE	500°F(260°C) CONTINUOUS 550°F(288°C) SINGLE EXPOSURE	500°F(260°C) CONTINUOUS 550°F(288°C) SINGLE EXPOSURE
FLAME TEST	NON-FLAMMABLE	NON-FLAMMABLE

GAUGE SIZE	NOMINAL INSULATION WALL(INCHES)	NOMINAL JACKET WALL(INCHES)	NOMINAL DIAMETER (INCHES)	APPROX. SHIP. WEIGHT LBS. PER 1000 FT
20	.008	.010	.068 X .116	12
24	.008	.010	.056 X .092	7
30	.004	.006	.030 X .048	2

PRICING POLICY > Shipments will be invoiced at PMC's prices in effect at time of shipment. Quotations are given with an escalation clause and prices, terms, and conditions are subject to change without prior notice. PMC will, however, make every attempt to hold to current quoted prices. All prices quoted are in United States currency, and shall be subject to correction for errors. Unless otherwise stated in writing to PMC.

REELS, SPOOLS & COILS > All shipments, unless specified otherwise by PMC, are made on non-returnable reels, spools or coils in one continuous length.

SHORTAGES & RETURNS > All claims for shortage or incorrect material must be made within 10 days after receipt of the goods to which such claim pertains. Goods may only be returned for credit within 1 month of the date of authorization. Goods that are special in any way shall not be returned to PMC. Material returned for any reason, without written authorization will be refused and returned at shipper's expense. A return request must be processed through our Londonderry, N.H. sales office.

TOLERANCES > Due to allowances in manufacturing processes for wire, cable and similar products, PMC reserves the right to ship a variation of ±10% from the quantity of such goods ordered. Physical tolerances shown are nominal. Shipping weights are an average of all types of conductors and are listed for estimating only. These weights can vary substantially due to different types of spools, reels and/or conductors.

The material contained in this document is presented in good faith and believed to be reliable and accurate. However, because testing conditions may vary and material quality or information that may be provided in whole or part by others may be beyond our control, no warranty, expressed or implied, is given and PMC Corporation can assume no liability for results obtained or damages incurred through the application of the data tests presented. NOTE: PMC reserves the right to substitute an equal product on all registered trademark items.

PMC Division of RSCC
680 Hayward Street
Manchester, NH 03103
Phone: (603) 622-3500 Fax: (603) 622-7023

Delivery Note
32133

Ship To: OMEGA POINT LABS
16015 SHADY FALLS ROAD
ELMENDORF, TX 78112

Attention: CLEDA

Ship Date	Customer P.O.	Ship Via	Due Date	
Sep 04 2001	**13262Q**	**UPS RED**	**SEP 11 2001**	**Page : 1**

Item and Description	Qty Ordered	Back ordered	Qty Shipped
1. KK-TA/TA-24 Calibrate at 200, 400, 600, 800, 1000°F I/O, HOT RUSH MUST SHIP ON TIME OR BEFORE Spool#: 00376345 00376344 00376343 00376347 00376348 00376346	25,000	0	27,330
2. CALIBRATION CHARGE CALIBRATION CHARGE	1	0	1

Q/A RECEIVING REPORT

OMEGA POINT LABORATORIES

CLIENT/PROJECT NAME Omega Point Labs
CLIENT/PROJECT NUMBER OPL Equipment
RECEIVED FROM SSC Lab
PROJECT LOCATION Omega Point Labs

REPORT NUMBER 2450 - OPL
DATE RECEIVED 7-7-04
DATE INSPECTED 7-7-04
INSPECTED BY: [illegible]

ITEM DESCRIPTION	P.O. NO.	QUANTITY Order	QUANTITY Rec'd	QUANTITY B.O.	I.D. NO.	CONID MATL Y/N	CERT. REC'D Y/N	SAFETY RELATED Y/N	CONTAINER INTEGRITY	ACCEPTANCE Accept	ACCEPTANCE Hold	ACCEPTANCE Reject	REMARKS
0-1000 psi Pressure gage	14432Q	1	1	Q	98LE005	Y	Y	N	Good	X			Calibration Service
0-60psi Pressure Gage	14432Q	1	1	Q	03-LE005	Y	Y	N	Good	X			
0-100psi Pressure Gage	14432Q	1	1	Q	98LE002	Y	Y	N	Good	X			
0-60psi Pressure Gage	14432Q	1	1	Q	03LE006	Y	Y	N	Good	X			
Torque Wrench	14432Q	1	1	Q	0304500152	Y	Y	N	Good	X			
5" Dial Indicator	14432Q	1	1	Q	012980987	Y	Y	N	Good	X			
5" Dial Indicator	14432Q	1	1	Q	020640234	Y	Y	N	Good	X			
Calibrator	14432Q	1	1	Q	11380	Y	Y	N	Good	X			

09-016-11/02

OMEGA POINT LABORATORIES
16015 SHADY FALLS RD.
ELMENDORF, TEXAS 78112
PH. (210) 635-8100
FAX (210) 635-8101

PURCHASE ORDER
14432Q

Date: 06/14/2004
Page: 1 of 1

Order From: SSC Lab Division
7715 Distribution Dr.
Little Rock
AR 72209
501-562-2900

Deliver to: Omega Point Laboratories, Inc
16015 Shady Falls Road
Elmendorf
TX 78112
(210) 635-8100
(800) 966-5253

Vendor No:

Your Item Number Item Description	Our Reference	Qty Ordered	Units	Unit Cost	Extension
Calibrator-RonanX85 SN: 11380	001	1.00	Each	$125.00	$125.00
5" Dial Indicator SN: 020640234	002	1.00	Each	$20.00	$20.00
5" Dial Indicator SN: 012980987	003	1.00	Each	$20.00	$20.00
1000psi Pressure Gage SN: 98LE005	004	1.00	Each	$45.00	$45.00
60psi Pressure Gage SN: 03LE005	005	1.00	Each	$45.00	$45.00
60psi Pressure Gage SN: 03LE006	006	1.00	Each	$45.00	$45.00
100psi Pressure Gage SN: 98LE002	007	1.00	Each	$45.00	$45.00
Torque Wrench 15.00 to 75.00 (ft-lb) SN: 0304500152	008	1.00	Each	$50.00	$50.00

CALIBRATION CERT. REQUIREMENTS
1. Statement of NIST traceability
2. NIST test or I.D. number
3. As Found
4. As Left Values
5. Uncertainties of calibration measurements
6. Calibration data
7. Calibration certificates must show accreditation to ISO/IEC 17025

"See Special Instructions Regarding Purchasing Specifications for Quality Assurance Requirements."
QA Approval
Date 6-14-04

Please Quote Purchase Order Number on all correspondence.

Special Instructions: Please include Certificate of Conformance to attached Specification Sheet and Calibration Data traceable to NIST.

Subtotal:	$395.00
Freight:	0.00
Tax Amount:	0.00
Total Value:	$395.00

VENDOR PURCHASING SPECIFICATION AND QUALITY ASSURANCE REQUIREMENTS

Vendor: SSC Lab Division
Purchase Order No. 14432Q

Any of the following Quality Assurance requirements shall be incorporated as conditions to this procurement when corresponding box is marked. Failure to comply with any requirement specified may result in rejection and/or return of shipment at seller's expense.

1.0 QUALITY PROGRAM

[X] Seller shall furnish all items on this Purchase Order in accordance with Quality Program approved by Buyer.

2.0 Quality Verification

When additional quality verification activities are required as a condition to this procurement, invoices will not be paid until satisfactory completion of such activities.

[X] Receiving Inspection- Buyer shall inspect items upon receipt to verify compliance with purchase order requirements. Rejected items shall be returned at seller's expense.

[ ] Independent Laboratory Tests- Samples of materials furnished shall be tested independently for conformance to specification requirements prior to final acceptance. Rejected materials shall be returned at seller's expense.

[X] Document Review- Final acceptance shall be based on satisfactory review or required certifications and other supporting documents.

3.0 CERTIFICATIONS

When certifications are required as a condition to this procurement, the seller shall furnish one reproducible copy either with or prior to each shipment. Shipments will not be accepted and invoices will not be paid until certifications are in buyer's possession.

[ ] Certificate of Compliance/Conformance Required – Certification that materials and /or services comply with purchase order requirements. Certification shall reference purchase order number and traceability numbers (when applicable).

[ ] Certified Test Report Required – Certification that material complies with applicable material specification (s) and the purchase order. Include actual results of required tests.

- [X] Certificate of Calibration Required - Certification shall be traceable to National Bureau of Standards. (NIST, Nat'l Inst. of Science & Technology).

4.0 AUDITS/RIGHT OF ACCESS

- [X] The buyer reserves the right to audit your facility to verify compliance with purchase order, code and specification requirements with (10) days notice,
- [X] Shipments shall only originate form facilities approved by the buyer.
- [ ] Buyer reserves the right to inspect any or all work included in this order at seller's facility with as early notice as practicable.

5.0 IDENTIFICATION

- [ ] Seller shall identify each item with a unique traceability number by physical marking or tagging. Traceability numbers shall be traceable to certifications and packing lists.
- [X] Seller shall identify each container with a unique identification number. The identification number shall be traceable to certifications and packing lists.

6.0 10CFR,PART 21

- [ ] The material, equipment and/or services to be furnished under this purchase order are involved in the testing of basic components of a Nuclear Regulatory Commission (NRC) licensed facility. Accordingly, the seller is subject to the provisions of 10 CFR, Part 21 (Reporting of Defects and Noncompliance)

7.0 PACKING/SHIPPING

- [X] All materials shall be packaged in air tight, moisture free containers and shall be free from all foreign substance such as dirt, oil, grease or other deleterious material.
- [ ] All materials and equipment shall be suitable crated, boxed or otherwise prepared for shipment to prevent damage during handling and shipping. Wherever practical, equipment shall be palletized for ease of unloading and storage at destination. Each container shall be clearly marked with buyer's purchase order number.

QUALITY ASSURANCE APPROVAL _____ DATE 6/14/04

SSC LAB DIVISION
a Division of System Scale Corporation
Employee Owned
"Quality You Can Measure"

CERTIFICATE NO: 36368-0003

ACCREDITED
Cert. #1754.01
Calibration Laboratory
ISO / IEC / 17025

CERTIFICATE OF CALIBRATION

SSC LAB DIVISION certifies that this instrument conforms to original manufacturers specifications or to tolerances indicated below and has been calibrated using standards with accuracies traceable to a National Measurement Institute, or to accepted values of natural physical constants, or have been derived by ratio techniques. This certificate complies with ISO / IEC 17025 & ANSI Z540. Unless otherwise stated, the M & T E for which this certificate is issued, based on interpretation of data, was found to meet the required specification. Reported uncertainty represents expanded uncertainty at approximately 95% confidence level, coverage factor of k=2.

Customer:	OMEGA POINT LAB.	Date Received:	6/24/04
Location:	16015 SHADY FALLS RD. ELMENDORF TX 78112	Date of Issue/Calibration:	06/30/2004
		Next Calibration Due:	06/30/2005
P.O. #:	14432Q	Metrologist:	Sean Rainey

Manufacturer:	McDANIEL CONTROLS INC.	Model:	316SS
Nomenclature:	GAGE- PRESSURE	Serial Number:	98LE002
Range:	0-100 PSI	Equipment ID:	98LE002

Calibration Data Temp 68°F Humidity 38%

Calibration Accuracy: ± 1 DIV

Note: if the AS LEFT column is blank, no adjustments were required.

Note: Many factors may cause out of calibration condition prior to due date.The Calibration interval has been specified by the Customer. Current procedures and methods utilized by SSC Lab Division are approved by the Customer.

APPLIED	AS FOUND	AS LEFT	UNCERTAINTY	PROCEDURE #
25 LBS	23.09	24.98	1.3	NA17-20MP-06
50 LBS	47.63	49.46	1.3	
75 LBS	72.88	74.70	1.3	
100 LBS	98.19	100.66	1.3	

STANDARDS(S) USED

Identification Number	Description	Calibration Date	Expiration Date	Traceability Number
SSC30LD029	CALIBRATOR- PRESSURE	7/30/2003	7/30/2004	33426-0044
SSC30LD031	TRANSDUCER- PRESSURE	8/11/2003	8/31/2004	1000154762

Calibration Certificate Acceptance
Item Pressure Gage 0-100 psi
SN 98LE002

	Q/A	Eng.
NIST Traceability Adequate		
As Found/As Left Values		
Calibration Data Sufficient		
Tolerance Range Adequate		
Date of Review:	7-7-04	7/7/04

OPL QA/QC Dept. Eng./Dept. Mgr.

Comments:

Gary McCourt
Chief Metrology Engineer

This certificate may not be reproduced, except in full, without the written consent of SSC Lab Division.

Memorandum

Date: July 8, 2004

To: Cleda Patton, Senior Administrative Assistant

From: Javier Trevino, Manager, Special Projects

Re: 100 lb. Pressure Gauge (SN 98LE002)

This memo shall reference one 100-pound pressure gauge that is currently stored in the controlled equipment supply cabinet. The pressure gauge was sent out for calibration and was determined to be out of tolerance by the calibration laboratory. This pressure gauge is used for the hose stream portion of the ASTM E119 fire endurance test. Using the data that was provided by the calibration laboratory the output pressure at 75 psi would have actually been 72.88 psi. On sound engineering judgement, the fact that the client failed the fire test portion of the ASTM E119 fire endurance test before the hose stream was performed no client notifications are necessary.

If there are any further questions regarding the use of this pressure gauge, please see me.

Javier Trevino,
Manager, Special Projects

7/12/04
Date

Q/A RECEIVING REPORT

CLIENT/PROJECT NAME Sandia National Labs
CLIENT/PROJECT NUMBER 14790-123263-264+265
RECEIVED FROM Texas Specialty Steel
PROJECT LOCATION Omega Point Labs

REPORT NUMBER 2689 - 14790
DATE RECEIVED 1-5-05
DATE INSPECTED 1-5-05
INSPECTED BY:

ITEM DESCRIPTION	P.O . NO.	QUANTITY Order	QUANTITY Rec'd	QUANTITY B.O.	I.D. NO.	CON'tD MATL Y/N	CERT REC'D Y/N	SAFETY RELATED Y/N	CONTAINER INTEGRITY	ACCEPTANCE Accept	ACCEPTANCE Hold	ACCEPTANCE Reject	REMARKS
C Channel	14674Q	30	30	Q	C4x5.4	Y	Y	N	GOOD	X			
4X5.4													
C Channel	14674Q	10	10	Q	C5X6.7	Y	Y	N	GOOD	X			
4X6.7													
Hot Rolled Steel	14674Q	12	12	Q	10GA x 72.0000"	Y	Y	N	GOOD	X			
10ga. x (Sheets)													
144"													

09-016-11/02

OMEGA POINT LABORATORIES
16015 SHADY FALLS RD.
ELMENDORF, TEXAS 78112
PH. (210) 635-8100
FAX (210) 635-8101

PURCHASE ORDER
14674Q

Date: 01/04/2005
Page: 1 of 1

Order From: Texas Specialty Steel
12270 Hwy. 181 S
San Antonio
TX 78223
210-633-0047

Deliver to: Omega Point Laboratories, Inc
16015 Shady Falls Road
Elmendorf
TX 78112
(210) 635-8100

Vendor No:

Your Item Number / Item Description	Our Reference	Qty Ordered	Units	Unit Cost	Extension
C Channel C4x5.4x20'	001	10	Each	$44.55	$445.50
C Channel C5x6.7x20'	002	30	Each	$55.28	$1,658.40
10 ga.72" x 144" HR Sheets	003	12	Each	$243.00	$2,916.00

"See Special Instructions Regarding Purchasing Specifications for Quality Assurance Requirements."
QA Approval [signature]
Date 1-4-05

Please Quote Purchase Order Number on all correspondence.
Please certify that the items supplied conform to applicable standards and specifications.

Subtotal:	$5,019.90
Freight:	0.00
Tax Amount:	338.84
Total Value:	$5,358.74

TEXAS SPECIALTY STEEL

12270 Hwy 181 So.
San Antonio, Texas 78223
(210) 633-0047
Fax 633-2344

SALES ORDER 5960

Omega Point Lab

DELIVER TO: Sam

Cleta

DATE ORDERED	PO #	DATE SHIPPED	SHIPPED VIA	F.O.B.	SALESMAN
1-4-05	14674 Q		OT		B. 15

QUANTITY		DESCRIPTION	WEIGHT	PRICE	TOTAL
30		4x5# Chan 20'	108# ea	44.55 ea	1336.50
10		5x6# Chan 20'	134# ea	55.28 ea	552.80
12		10ga 6 x 12 HR Sheets	405# ea	243.00 ea	2916.00
					4805.3
				TAX	324.36
		MTR required			5129.66
		$25.00 Service Charge For Returned Checks			
		☒ TAXABLE ☐ NON-TAXABLE			

BAYOU STEEL CORPORATION
RIVER ROAD P.O. BOX 5000
LA PLACE, LOUISIANA 70069-1156
Telephone (985) 652-4900

MATERIAL CERTIFICATION REPORT

TESTED IN ACCORDANCE WITH ASTM A6

INVOICE NO.
PRODUCT CHANNELS
HEAT NO. 28136 48 Pcs
Length 20'0"

DATE 11/30/04
Cust O-3300 -0184
GRADE A36 -01
SIZE C 4 X 5.4

PO:0663288 03 24
Prod Id:0126441

CHEMICAL ANALYSIS	
C	.11
Mn	.78
P	.014
S	.02
Si	.21
Cu	.31
Ni	.17
Cr	.17
Mo	.056
Cb	.000
V	.000
B	
Al	
Sn	
N	
Ti	

CI	
CE	

MECHANICAL PROPERTIES	TEST 1 IMPERIAL	TEST 1 METRIC	TEST 2 IMPERIAL	TEST 2 METRIC	TEST 3 IMPERIAL	TEST 3 METRIC
YIELD STRENGTH	46,363 PSI	320 MPa	45,448 PSI	313 MPa	PSI	MPa
TENSILE STRENGTH	66,399 PSI	458 MPa	66,645 PSI	460 MPa	PSI	MPa
ELONGATION	33.0 %	33.0 %	31.0 %	31.0 %	%	%
GUAGE LENGTH	8 in	203 mm	8 in	203 mm	in	mm
BEND TEST DIAMETER	d	d	d	d	d	d
BEND TEST RESULTS						
SPECIMEN AREA	sq in	sq mm	sq in	sq mm	sq in	sq mm
REDUCTION OF AREA	%	%	%	%	%	%
IMPACT STRENGTH	ft·lbs	J	ft·lbs	J	ft·lbs	J

IMPACT STRENGTH	IMPERIAL	METRIC
AVERAGE	ft·lbs	J
TEST TEMP	F	C
ORIENTATION		

INTERNAL CLEANLINESS	
SEVERITY	
FREQUENCY	
RATING	

GRAIN SIZE HARDNESS	
GRAIN PRACTICE REDUCTION RATIO	

Customer Grade & Specs: ASME SA36 A709 GRADE 36
"NO WELD REPAIR"

I HEREBY CERTIFY THAT THE MATERIAL TEST RESULTS PRESENTED HERE ARE FROM THE REPORTED HEAT AND ARE CORRECT. ALL TESTS WERE PERFORMED IN ACCORDANCE TO THE SPECIFICATIONS REPORTED ABOVE. ALL STEEL IS ELECTRIC FURNACE MELTED, MANUFACTURED, PROCESSED, AND TESTED IN THE U.S.A WITH SATISFACTORY RESULTS, AND IS FREE OF MERCURY CONTAMINATION IN THE PROCESS.

NOTARIZED UPON REQUEST:
SWORN TO AND SUBSCRIBED BEFORE ME IN AND FOR ST. JOHN PARISH ON THIS _____ DAY OF _____, 20____

Jeanne M. Buffington, # 60493, Notary Public

SIGNED Timothy R. White
TIMOTHY R. WHITE, QUALITY ASSURANCE MANAGER

DIRECT ANY QUESTIONS OR NECESSARY CLARIFICATIONS CONCERNING THIS REPORT TO THE SALES DEPARTMENT.

1-800-535-7692 (USA)

BAYOU STEEL CORPORATION
RIVER ROAD P.O. BOX 5000
LA PLACE, LOUISIANA 70069-1156
Telephone (985) 652-4900

MATERIAL CERTIFICATION REPORT

TESTED IN ACCORDANCE WITH ASTM A6

INVOICE NO.
PRODUCT CHANNELS
HEAT NO. 23960 36 Pcs
Length 20'0"

DATE 06/01/04
Cust O-3300 -0184
GRADE A36 -01
SIZE C 5 X 6.7

PO:0661120 03 24
Prod Id:0127721

CHEMICAL ANALYSIS	
C	.12
Mn	.96
P	.018
S	.04
Si	.26
Cu	.41
Ni	.17
Cr	.19
Mo	.056
Cb	.000
V	.018
B	
Al	
Sn	
N	
Ti	

Cl	
CE	

MECHANICAL PROPERTIES	TEST 1 IMPERIAL	TEST 1 METRIC	TEST 2 IMPERIAL	TEST 2 METRIC	TEST 3 IMPERIAL	TEST 3 METRIC
YIELD STRENGTH	52,522 PSI	362 MPa	53,298 PSI	367 MPa	PSI	MPa
TENSILE STRENGTH	74,321 PSI	512 MPa	75,257 PSI	519 MPa	PSI	MPa
ELONGATION	31.0 %	31.0 %	26.0 %	26.0 %	%	%
GUAGE LENGTH	8 in	203 mm	8 in	203 mm	in	mm
BEND TEST DIAMETER	d	d	d	d	d	d
BEND TEST RESULTS						
SPECIMEN AREA	sq in	sq mm	sq in	sq mm	sq in	sq mm
REDUCTION OF AREA	%	%	%	%	%	%
IMPACT STRENGTH	ft·lbs	J	ft·lbs	J	ft·lbs	J

IMPACT STRENGTH	IMPERIAL	METRIC
AVERAGE	ft·lbs	J
TEST TEMP	F	C
ORIENTATION		

INTERNAL CLEANLINESS	
SEVERITY	
FREQUENCY	
RATING	

GRAIN SIZE HARDNESS	
GRAIN PRACTICE REDUCTION RATIO	

Customer Grade & Specs: ASME SA36 A709 GRADE 36
"NO WELD REPAIR"

I HEREBY CERTIFY THAT THE MATERIAL TEST RESULTS PRESENTED HERE ARE FROM THE REPORTED HEAT AND ARE CORRECT. ALL TESTS WERE PERFORMED IN ACCORDANCE TO THE SPECIFICATIONS REPORTED ABOVE. ALL STEEL IS ELECTRIC FURNACE MELTED, MANUFACTURED, PROCESSED, AND TESTED IN THE U.S.A WITH SATISFACTORY RESULTS, AND IS FREE OF MERCURY CONTAMINATION IN THE PROCESS.

NOTARIZED UPON REQUEST:
SWORN TO AND SUBSCRIBED BEFORE ME IN AND FOR ST. JOHN PARISH ON THIS _____ DAY OF _____, 20____

Jeanne M. Buffington, # 60493, Notary Public

SIGNED Timothy R. White
TIMOTHY R. WHITE, QUALITY ASSURANCE MANAGER

DIRECT ANY QUESTIONS OR NECESSARY CLARIFICATIONS CONCERNING THIS REPORT TO THE SALES DEPARTMENT.
1-800-535-7692 (USA)

Tel: 205-599-8000 Fax: 205 599-8131

CERTIFICATE of ANALYSIS and TESTS

Cert. No: HO 99160
13Oct04

Part No 863826/0617501
HR COIL ASTMA1011 COMM STL
10 GA. X 72.0000"

Pcs	Wgt
26	10,530

Heat Number	Tag No
61984C	445062

Pcs	Wgt
	0

MILL=<US STEEL>/VESSL=<MP951019>/CNTRY=<USA>/REV=<04-03>

Heat Number
61984C

*** Chemical Analysis ***
C=0.0500 Mn=0.3400 P=0.0110 S=0.0080 Si=0.0050 Cu=0.0500
Al=0.0540

THIS IS TO CERTIFY THAT THE PRODUCT DESCRIBED HEREIN WAS SAMPLED AND TESTED IN ACCORDANCE WITH THE SPECIFICATION, TO OUR KNOWLEDGE, AND FULFILLS REQUIREMENTS IN SUCH RESPECT.

2042762-30

BAYOU STEEL CORPORATION
RIVER ROAD P.O. BOX 5000
LA PLACE, LOUISIANA 70069-1156
Telephone (985) 652-4900

MATERIAL CERTIFICATION REPORT

20PC- 14674Q

TESTED IN ACCORDANCE WITH ASTM A6

INVOICE NO.
PRODUCT CHANNELS
HEAT NO. 23I49 36 Pcs
Length 40'0"

DATE 03/25/04
Cust O-3300 -0184
GRADE A36 -01
SIZE C 5 X 6.7

PO:0660119 03 24
Prod Id:0128041

CHEMICAL ANALYSIS	
C	.14
Mn	.88
P	.015
S	.04
Si	.25
Cu	.24
Ni	.13
Cr	.14
Mo	.025
Cb	.000
V	.000
B	
Al	
Sn	
N	
Ti	

CI	
CE	

MECHANICAL PROPERTIES	TEST 1 IMPERIAL	TEST 1 METRIC	TEST 2 IMPERIAL	TEST 2 METRIC	TEST 3 IMPERIAL	TEST 3 METRIC
YIELD STRENGTH	48,344 PSI	333 MPa	47,994 PSI	331 MPa	PSI	MPa
TENSILE STRENGTH	70,206 PSI	484 MPa	69,642 PSI	480 MPa	PSI	MPa
ELONGATION	36.0 %	36.0 %	36.0 %	36.0 %	%	%
GUAGE LENGTH	8 in	203 mm	8 in	203 mm	in	mm
BEND TEST DIAMETER	d	d	d	d	d	d
BEND TEST RESULTS						
SPECIMEN AREA	sq in	sq mm	sq in	sq mm	sq in	sq mm
REDUCTION OF AREA	%	%	%	%	%	%
IMPACT STRENGTH	ft·lbs	J	ft·lbs	J	ft·lbs	J

IMPACT STRENGTH	IMPERIAL	METRIC
AVERAGE	ft·lbs	J
TEST TEMP	F	C
ORIENTATION		

INTERNAL CLEANLINESS	
SEVERITY	
FREQUENCY	
RATING	

GRAIN SIZE HARDNESS	
GRAIN PRACTICE REDUCTION RATIO	

Customer Grade & Specs: ASME SA36 A709 GRADE 36
"NO WELD REPAIR"

I HEREBY CERTIFY THAT THE MATERIAL TEST RESULTS PRESENTED HERE ARE FROM THE REPORTED HEAT AND ARE CORRECT. ALL TESTS WERE PERFORMED IN ACCORDANCE TO THE SPECIFICATIONS REPORTED ABOVE. ALL STEEL IS ELECTRIC FURNACE MELTED, MANUFACTURED, PROCESSED, AND TESTED IN THE U.S.A WITH SATISFACTORY RESULTS, AND IS FREE OF MERCURY CONTAMINATION IN THE PROCESS.

NOTARIZED UPON REQUEST:
SWORN TO AND SUBSCRIBED BEFORE ME IN AND FOR ST. JOHN PARISH ON THIS _____ DAY OF _____, 20____

Jeanne M. Bulfington, # 60493, Notary Public

SIGNED Timothy R. White
TIMOTHY R. WHITE, QUALITY ASSURANCE MANAGER

DIRECT ANY QUESTIONS OR NECESSARY CLARIFICATIONS CONCERNING THIS REPORT TO THE SALES DEPARTMENT.

1-800-535-7692 (USA)

TEXAS SPECIALTY 2106332344 01/01/2000 01:47
PAGE.01 2106332344 JAN 10 '05 13:05

Q/A RECEIVING REPORT

CLIENT/PROJECT NAME Sandia Nat'l Labs
CLIENT/PROJECT NUMBER 14790-123263.64+65
RECEIVED FROM Sandia Nat'l Labs
PROJECT LOCATION Omega Point Labs

REPORT NUMBER 2700 - 14790
DATE RECEIVED 3-4-05
DATE INSPECTED 3-4-05
INSPECTED BY: [illegible]

ITEM DESCRIPTION	P.O. NO.	QUANTITY Order	QUANTITY Rec'd	QUANTITY B.O.	I.D. NO.	CON'tD MATL Y/N	CERT REC'D Y/N	SAFETY RELATED Y/N	CONTAINER INTEGRITY	ACCEPTANCE Accept	ACCEPTANCE Hold	ACCEPTANCE Reject	REMARKS
cabletray 12"	NA	Ø	3	Ø	248P09-12-144STR	Y	N	N	GOOD	X			Receiving Only
cabletray 36"	NA	Ø	3	Ø	248P09-36-144-STR	Y	N	N	GOOD	X			
90° - 12"	NA	Ø	2	Ø	4P-12-90V124 VRT 1/S	Y	N	N	GOOD	X			
90° - 36"	NA	Ø	2	Ø	4P-36-90V124 VRT 1/S	Y	N	N	GOOD	X			
Splice Plates	NA	Ø	8 3-4-05	Ø	11954A	Y	N	N	GOOD	X			
Splice Plates	NA	Ø	12	Ø	11341D	Y	N	N	GOOD	X			

09-016-11/02

FM 136

PACKING LIST

COOPER B-Line 509 West Monroe Street
Highland, Illinois 62249-0326, U.S.A.
618-654-2184

SHIPPING ORDER NO. 80770500001

PAGE 1

024012438

SOLD TO:
BORDER STATES ELECTRIC
PO BOX 2767

FARGO ND 581082767

000072721

SHIP TO:
OMEGA POINT LABS
16015 SHADY FALLS ROAD

ELMENDORF TX 78112

ATTN: RECEIVING

SHIP FROM	SHIP DATE	SHIP VIA	BILL OF LADING	WEIGHT	FREIGHT TERMS
RENO	3/02/05	PRECISION AIR C	01256739	501.00	CHARGE

CST PO: 5500414947

PHONE: 7012935833

ORDERED	DUE	SHIPPED	BACKORDER	UNIT	LINE	DESCRIPTION
						CONTACT IS DEG PRIEST 210 635 8100 CAN SHIP EARLY 3/2 PER KATHY C. SHIP PRECISION AIR PER STEVE AT KH 1-800-842-7472 ACCT #613. INSURE FOR VALUE OF MATL $1516.00. ASK PRECISION TO CONFIRM WITH HOPE AT BORDER 505-344-1313.
3	3	3		PC	1	248P09-12-144 ST SC ✓ 78101162149
3	3	3		PC	2	248P09-36-144 ST SC ✓ 78101162454
2	2	2		PC	3	4P-12-90VI24 VRT I/S ✓ 78101162189
2	2	2		PC	4	4P-36-90VI24 VRT I/S ✓ 78101162491
10	10	10		PR	5	9ZN-8004 SPLICE PLT ✓ 78101126314

ANY SHORTAGE OR DAMAGE MUST BE REPORTED TO CUSTOMER SERVICE AT 618.654.2184 WITHIN TEN (10) DAYS FROM DATE OF SHIPMENT.

THIS MEMORANDUM is an acknowledgment that a Bill of Lading has been issued and is not the Original Bill of Lading nor a copy or duplicate, covering the property named herein, and is intended solely for filing or record.

RECEIVED, subject to the classifications and tariffs in effect on the date of the receipt by the carrier of the property described in the Original Bill of Lading, the property described below, in apparent good order, except as noted (contents and condition of contents of packages unknown), marked consigned, and destined as indicated below, which said carrier (the word carrier being understood throughout this contract as meaning any person or corporation in possession of the property under the contract) agrees to carry to its usual place of delivery at said destination, if on its route, otherwise to deliver to another carrier on the route to said destination. It is mutually agreed, as to each carrier of all or any of said property over all or any portion of said route to destination, and as to each party at any time interested in all or any of said property, that every service to be performed hereunder shall be subject to all the terms and conditions of the Uniform Domestic Straight Bill of Lading set forth (1) in Official, Southern, Western and Illinois Freight Classifications in effect on the date hereof, if this is a rail or a rail-water shipment or (2) in the applicable motor carrier classification or tariff if this is a motor carrier shipment.

Shipper hereby certifies that he is familiar with all the terms and conditions of the said bill of lading, including those on the back thereof, set forth in the classification or tariff which governs the transportation of this shipment, and the said terms and conditions are hereby agreed to by the shipper and accepted for himself and his assigns.

4

B/L NO. 0128-6739

SHIPPER'S NO. 807705 00 001

Page 613

AT RENO FROM **COOPER B-Line** 3/02/05 NAME OF CARRIER

(Mail or street address of consignee – For purposes of notification only.)

Consigned To OMEGA POINT LABS
16015 SHADY FALLS ROAD

PO# 5500414947
MARK: RECEIVING

Dest'n ELMENDORF TX 78112

Route

Del'ng Carr. PRECISION AIR C

Car or Vehicle Initials No.

NUMBER OF PACKAGES	KIND OF PACKAGE, DESCRIPTION OF ARTICLES, SPECIAL MARKS, AND EXCEPTIONS		*WEIGHT (SUBJECT TO CORRECTION)	CLASS OR RATE
	Bundles of _____ Pcs. Single Pcs. Carton _____ Pcs.	Channels, NOI Iron or Steel Item No. 104850		
1	Crates Skids Cartons	Braces, Brackets NOI, Iron or Steel 3/16" Thick or Thicker Item No. 104600	25#	50
	Bundle of _____ Pcs. Single Pcs. {Bundles of _____ Pcs. Curved Fitting Single Pcs. Curved Fitting}	Cable Racks; Trays Troughs or Cable Way Aluminum Straight Section and Curved Fittings. Item No. 61220 - Sub 2		
2 4	Bundles of _____ Pcs. Single Pcs. {Bundles of _____ Pcs. Curved Fittings Single Pcs. Curved Fitting}	Cable Racks, Trays Troughs or Cable Way Steel 16 Gauge or Thicker Straight Sections and Curved Fittings Item No. 61220 - Sub 1	476#	60
	Crates Skids Cartons	Clips, Fasteners or Mounts, Steel, 94230		
	7 TOTAL PCS.- 801# - DELIVERY DATE 03/04 CONTACT IS DEC PRIEST 210-635-8100 $1516.00 INSURANCE ********** SEND FREIGHT BILL WITH B/L TO: BILL ACCT# 613 X X X XX 00001 **********			

Subject to Section 7 of conditions of applicable bill of lading, if this shipment is to be delivered to the consignee without recourse on the consignor, the consignor shall sign the following statement:

The carrier shall not make delivery of this shipment without payment of freight and all other lawful charges.

COOPER B-Line

(Signature of Consignor)

If charges are to be prepaid, write or stamp here, "To be Prepaid."

THIRD PARTY

Received $ to

apply in prepayment of the charges on the property described hereon.

Agent or Cashier.

Per

(The signature here acknowledges only the amount prepaid.)

Charges Advanced:
$

Collect On Delivery $ and Remit to

Street City State

C.O.D. CHARGES TO BE PAID BY
Shipper ☐ Consignee ☐

*If the shipment moves between two ports by a carrier by water, the law requires that the bill of lading shall state whether it is "carrier's or shipper's weight."
NOTE-Where the rate is dependent on value, shippers are required to state specifically in writing the agreed or declared value of the property. The agreed or declared value of the property is hereby specifically stated by the shipper to be not exceeding

per Shattuck, Tom

The Fibre Boxes used for this shipment conform to the specifications set forth in the box maker's certificate thereon, and all other requirements of Consolidated Freight Classification.

COOPER B-Line Shipper, Per

Agent, Per

Permanent postoffice address of shipper, **P.O. Box 326, Highland, Illinois 62249**

Form 103 Rev. 05/01

PACKING LIST COPY

Airgroup - DFW
PO Box 3627
Bellevue, WA 98009-3627
Tel: 817-481-0970 Fax: 817-488-6583
www.airgroup.com

HAWB # : 129000584
Origin : DFW
Destination :
Pick Up Date : 03/03/2005
Deliv Date : BY 03/04/2005
COD :
Charges : Third Party
Shipment # :

Domestic HAWB

Shipper	Consignee	Billing Party
AA C/O QLS 3801 PINNACLE POINT COCKRELL, TX 75211 **Attn:** **Tel:** **Ref #**	AA C/O LSG SKY CHEFS 18950 COLONEL FISCHER DR. HOUSTON, TX 77032 **Attn:** CECELIA **Tel:** 281-443-8560 **Ref #**	WORLDWIDE FLIGHT E BUSINESS 1925 W JOHN CARPENTER FRWY STE 450 IRVING, TX 75063 **Attn:** **Tel:** **Ref #**

Pick Up Ready	Between	Closing	Deliver By	Between	Closing
03/03/2005	-		03/04/2005	-	

TSA	U

Special Instructions

Pieces	Actual Weight	Corrected Weight	Description	Length	Width	Height
1	266.00 LB			48.00	40.00	19.00
			SHIPMENT TOTALS			
1	266.00 LB		188.04 LB			

Charge	Description	Qty	Rate	Amount
	TOTAL CHARGES			$0.00

Total Declared Value	

Shipper Signature			Pick-Up Driver Signature			Consignee Signature		
Date	Time	Pcs	Date	Time	Pcs	Date	Time	Pcs
Exceptions (Shipment received in good order unless noted)			Exceptions (Shipment received in good order unless noted)			Exceptions (Shipment received in good order unless noted)		

Q/A RECEIVING REPORT

CLIENT/PROJECT NAME Sandia National Labs
CLIENT/PROJECT NUMBER 14790-123263-264+265
RECEIVED FROM Sandia Nat'l Labs
PROJECT LOCATION Omega Point Labs

REPORT NUMBER 2691 - 14790
DATE RECEIVED 1-14-05
DATE INSPECTED 1-14-05
INSPECTED BY: [illegible]

ITEM DESCRIPTION	P.O. NO.	QUANTITY Order	QUANTITY Rec'd	QUANTITY B.O.	I.D. NO.	CON'tD MATL Y/N	CERT REC'D Y/N	SAFETY RELATED Y/N	CONTAINER INTEGRITY	ACCEPTANCE Accept	ACCEPTANCE Hold	ACCEPTANCE Reject	REMARKS
12" wide cable tray	NA	Ø	4	Ø	09-1D79-0012-12	Y		N	Good	X			Receiving Only
12" inside curve cable tray	NA	Ø	3	Ø	09-1D79-9124-12								
36" inside curve cable tray	NA	Ø	3	Ø	09-1D79-9124-36								
Unistrut super strut	NA	Ø	13	Ø	A-1200-AS								
2" square steel tube	NA	Ø	2	Ø									
Box of hardware - cable tray	NA	Ø	1	Ø	NA								
36" cable tray	NA	Ø	4	Ø	09-1D79-0012-36								
Bare #8 Copper	NA	Ø	36	Ø	#33500 NAED 050-4000J	✓		✓	✓	✓			

09-016-11/02

Page 2 of 2

Q/A RECEIVING REPORT

CLIENT/PROJECT NAME Sandia National Labs
CLIENT/PROJECT NUMBER 14790 - 123263-264 & 265
RECEIVED FROM Sandia Nat'l Labs
PROJECT LOCATION Omega Point Labs

REPORT NUMBER 2691 - 14790
DATE RECEIVED 1-14-05
DATE INSPECTED 1-14-05
INSPECTED BY: [illegible]

ITEM DESCRIPTION	P.O. NO.	QUANTITY Order	QUANTITY Rec'd	QUANTITY B.O.	I.D. NO.	CON'tD MATL Y/N	CERT REC'D Y/N	SAFETY RELATED Y/N	CONTAINER INTEGRITY	ACCEPTANCE Accept	ACCEPTANCE Hold	ACCEPTANCE Reject	REMARKS
1" galv. conduit	NA	Ø	12	Ø	3WA8 1" 1"X10P6RC	Y		N	GOOD	X			Receiving only
1" conduit bodies	NA	Ø	5	Ø	APA LB77 1" FM7								
1" conduit gaskets	NA	Ø	5	Ø	NA								
1" steel covers	NA	Ø	5	Ø	1" FM7 APP 370								
2.5" galv. conduit	NA	Ø	12	Ø	3WA0 2½" E-104582S	Y							
2.5" conduit bodies	NA	Ø	5	Ø	APP LB77 2-½" FM7								
2.5" conduit gaskets	NA	Ø	5	Ø	NA								
2.5" steel covers	NA	Ø	5	Ø	Form 7 o/2-Gedney 870 2½"-3"								
4" galv. conduit	NA	Ø	12	Ø	3WA0 4" E-104582S								
4" conduit bodies	NA	Ø	5	Ø	APP 4" LB 107								
4" conduit gaskets	NA	Ø	5	Ø	NA								
4" steel covers	NA	Ø	5	Ø	APP 970 3½"-4" FM7								
18"X24"X8" Junction boxes	NA	Ø	4	Ø	~~00035185987~~ 1-14-05 ASE22X18X8NK								
90°-1" conduit elbow	NA	Ø	5	Ø	E-32152-H 1-90-STD RAD								
90°-2.5" conduit elbow	NA	Ø	5	Ø	2X½X 90 Deg								
90°-4" conduit elbow	NA	Ø	5	Ø	E-32152-H 3WA8 4" 90 DEG	Y		N	GOOD	X			

09-016-11/02

RR#2691

Cleda

Rec. 1-12-05

Fri shipment is due

Sandia National Laboratories
For the U.S. Department of Energy
1515 Eubank SE
Albuquerque, NM, 87123

SHIPPER **44885**

Commercial Invoice

Status: Approved

Ship to:

Omega Point Laboratories
16015 Shady Falls Road

Elmendorf TX 78112
United States

RMA# or RGA#	
Deliver to:	Deg Priest
Phone:	(210) 635-8100
Building:	Room:
Mail Stop:	
Company:	Omega Point Laboratories
Department:	
Address Type:	Unclassified
Date Due at Destination:	1/16/2005
Production Related:	No

Origination Site:	SA
Form filled out by:	WYANT,FRANCIS J.
Phone:	5058445682
Date Prepared:	2005-1-10
Requester:	FRANK WYANT,FRANCIS J.
Phone:	5058445682
Org. #:	06861

For Shipment Processing Use

Date Shipped:	
Carrier:	None Selected
Mode:	None Selected
Bill of Lading No.:	
Total # of Pkgs:	0
Total Weight:	0.0 lbs
Total Cubic Dim:	0.0
Advance Notification	**Contacted** Yes No
Name and Phone:	
741 Number:	
ATS:	
TID Numbers:	
RCT Initial/Dates	

Reason/Authority: To be Consumed in Testing / Incorporate into End Product
Return Date: NONE
Authority Number:
Freight Charge Payment: Sandia Pays
Project: 73766
Task: 01.08
Carrier: NONE
Account:

If shipping controlled property to a new Sandia location
Destination Bldg: **Room:**

If shipping to international destination:
Import duties and taxes will be paid by my project/task: I
Export Authorization:

No freight charge reason: NONE
Is material being shipped from the Shipping Department building or the 6000 Igloo? No
Shipment Comments: Shipping container located at the TEAMS (old TOSI Site). Contact Chuck Girard (cell: 459-8181) for pick
Transportation Pickup Requested: Yes
Questions about pickup call Dispatcher 844-1448 non-hazardous materials, 844-2556 hazardous materials.

Shipper's Export Declaration prepared:

Landstar Inway
805-8828
or
646-0412

Total Shipment Quantity and Value:	1	$6,000.00

LINE ITEM LIST FOR SHIPPER NUMBER 44885

Line Item #	Description/Comments For temporary transfer of items to international destinations, include item Manufacturer's Name, Category Domestic or Foreign, and Serial Number.	Classification Category/ level	Qty	Unit	Unit Value	T
1	Description: One shipping container containing the following items: 120 ft 1-in galvanized conduit, 5 1-in conduit bodies, 5 1-in conduit gaskets, 5 1-in steel covers; 120 ft 2.5-in galvanized conduit, 5 2.5-in conduit bodies, 5 2.5-in conduit gaskets, 5 2.5-in steel covers; 120 ft 4-in galvanized conduit, 5 4-in conduit bodies, 5 4-in conduit gaskets, 5 4-in steel covers; 4 18 x 24 x 8 junction boxes; 5 90-degree 1-in conduit elbows; 5 90-degree 2.5-in conduit elbows; 5 90-degree 4-in conduit elbows; 48-ft of 12-in wide cable trays; 48-ft of 36-in wide cable trays; 3 12-in inside curves; 3 36-in inside curves; 130 ft of Unistrut; 20 ft of 2-in square steel tube; Box of hardware for cable trays Comments: These items will be used in a series of destructive tests and will not be returned to Sandia following use.	Unclassified	1	EACH	$6,000.00	$(

PACKAGES

				Dimensions					
Quantity	Type	Contents	Weight		L	W	H	D	Cubic Fe
No Packages Found									

Combination to Lock on Shipping Container:

Turn right 3 times. Stop at 6
Turn left past 6 Stop at 8
Turn right to 26

Sandia National Laboratories
For the U.S. Department of Energy
1515 Eubank SE
Albuquerque, NM, 87123

SHIPPER **45687**

Commercial Invoice

Status: Waiting for Approval

Ship to:

Omega Point Laboratories, Inc
16015 Shady Falls Road

Elmendorf TX 78112-9784
United States

RMA# or RGA#	
Deliver to:	Deggary N. Priest
Phone:	210-635-8100
Building:	Room:
Mail Stop:	
Company:	Omega Point Laboratories
Department:	
Address Type:	Unclassified
Date Due at Destination:	2/27/2005
Production Related:	No

Origination Site:	SA
Form filled out by:	WALLACE,SAMUEL T.
Phone:	5058440225
Date Prepared:	2005-1-27
Requester:	WALLACE,SAMUEL T.
Phone:	5058440225
Org. #:	06113

For Shipment Processing Use

Date Shipped:	
Carrier:	None Selected
Mode:	None Selected
Bill of Lading No.:	
Total # of Pkgs:	0
Total Weight:	0.0 lbs
Total Cubic Dim:	0.0
Advance Notification	**Contacted** Yes No
Name and Phone:	
741 Number:	
ATS:	
TID Numbers:	
RCT Initial/Dates	

Reason/Authority: Analysis / Evaluation / Testing
Return Date: NONE
Authority Number:
Freight Charge Payment: Sandia Pays
Project: 73766
Task: 01.03
Carrier: NONE
Account:

If shipping controlled property to a new Sandia location
Destination Bldg: **Room:**

If shipping to international destination:
Import duties and taxes will be paid by my project/task:
Export Authorization:

No freight charge reason: NONE
Is material being shipped from the Shipping Department building or the 6000 Igloo? Yes
Shipment Comments: my repack items, if needed
Transportation Pickup Requested: Yes
Questions about pickup call Dispatcher 844-1448 non-hazardous materials, 844-2556 hazardous materials.

Shipper's Export Declaration prepared:

Total Shipment Quantity and Value:	46	$9,200.00

LINE ITEM LIST FOR SHIPPER NUMBER 45687						
Line Item #	Description/Comments For temporary transfer of items to international destinations, include item Manufacturer's Name, Category Domestic or Foreign, and Serial Number.	Classification Category/level	Qty	Unit	Unit Value	Total $
1	Description: Thermocouples Comments:	Unclassified	46	EACH	$200.00	$9,200.00

PACKAGES									
				Dimensions					
Quantity	Type	Contents	Weight		L	W	H	D	Cubic Feet
No Packages Found									

Q/A RECEIVING REPORT

CLIENT/PROJECT NAME Sandia Natl Lab/OPL
CLIENT/PROJECT NUMBER 14790-123263, 64765
RECEIVED FROM Sandia Natl Labs
PROJECT LOCATION Omega Point Labs

REPORT NUMBER 2695 . 14790/OPL
DATE RECEIVED ~~2-3~~ 2-1-05
DATE INSPECTED 2-1-05
INSPECTED BY: [signature]

ITEM DESCRIPTION	P.O . NO.	QUANTITY Order	QUANTITY Rec'd	QUANTITY B.O.	I.D. NO.	CON'tD MATL Y/N	CERT REC'D Y/N	SAFETY RELATED Y/N	CONTAINER INTEGRITY	ACCEPTANCE Accept	ACCEPTANCE Hold	ACCEPTANCE Reject	REMARKS
quick Disconnect Thermocouples	NA	46	46	0	KQIN-116-144-ungrounded SN: 1 through 46	Y	Y	N	Good	X			TC's sent to Sandia for calibration using Transmittal #1126 dated 1/11/05

09-016-11/02

Sandia National Laboratories

Operated for the U.S. Department of Energy by
Sandia Corporation

Albuquerque, New Mexico 87185-0706

Tel (505) 844-2464, FAX (505) 844-0240
Internet: bllevin@sandia.gov

January 27, 2005

Deggary N. Priest, President
Omega Point Laboratories, Inc.
16015 Shady Falls Road
Elmendorf, TX 78112-9784
(210) 635-8100

Re: Quick Disconnect Thermocouples

Dear Deg,

Please find the forty-six thermocouples enclosed for installation and insulation thermal testing of the junction boxes. The Primary Standards Laboratory at SNL verified calibration of each of the thermocouples and have provided a certificate of uncertainty over a range of 70°F to 1000°F for each thermocouple. Please find enclosed copies of these certificates along with calibration stickers. Each sticker can be attached to its associated thermocouple near the connector end following the test to minimize interference during assembly and testing.

Yours truly,

Bruce

Bruce L. Levin

BLL/bll
Copy: file

PRIMARY STANDARDS LABORATORY

Sandia National Laboratories, Albuquerque, New Mexico 87185-0665

CERTIFICATE

File No. 51536
LIMITED

THERMOCOUPLE	TYPE K - STD
Model No.	KQIN-116-144
Serial No.	1
Procedure No.	CP – TC (07/22/98)
Lab Conditions:	Temperature: 23 °C ± 2 °C Humidity: 40% ± 10%
Submitted by:	Organization 06113 SNL / NM
Certified:	January 18, 2005
Expires:	January 18, 2006

COPY

The thermocouple was calibrated over the temperature range of 71 °F to 1000 °F by comparison with a Standard Platinum Resistance Thermometer (SPRT). The thermocouple was calibrated in the 9122 Dry Well, with an immersion of 6 inches. The probe mV output was measured with an 8508A Fluke Multimeter. Both the SPRT and the Multimeter have calibrations that are traceable to the National Institute of Standards and Technology (NIST) or to intrinsic standards. The thermocouple type, temperature range calibrated over and the uncertainty of a confidence level of k=2 is as follows:

TC Type	Range	Uncertainty
K	70 °F to 1000 °F	± (4 °F or 0.75% of reading) (whichever is greater)

NOTES: The tolerance statement applies only to the thermocouple, and does not include any instrument used by the owner to measure it.
The results relate only to the items tested or calibrated.

Metrologist: A. Sanchez, 02541

Approved by: L.J. Azevedo, 02541
Manager

Copy to: Submitting organization
Department 02541 file

Date received: 01/14/05
Dates tested: 01/18/05

NVLAP®
Accredited by the National Voluntary Laboratory Accreditation Program for the scope of accreditation under Lab Code 105002

PRIMARY STANDARDS LABORATORY

Sandia National Laboratories, Albuquerque, New Mexico 87185-0665

CERTIFICATE

File No. 51537
LIMITED

THERMOCOUPLE	TYPE K - STD
Model No.	KQIN-116-144
Serial No.	2
Procedure No.	CP – TC (07/22/98)
Lab Conditions:	Temperature: 23 °C ± 2 °C Humidity: 40% ± 10%
Submitted by:	Organization 06113 SNL / NM
Certified:	January 18, 2005
Expires:	January 18, 2006

COPY

The thermocouple was calibrated over the temperature range of 71 °F to 1000 °F by comparison with a Standard Platinum Resistance Thermometer (SPRT). The thermocouple was calibrated in the 9122 Dry Well, with an immersion of 6 inches. The probe mV output was measured with an 8508A Fluke Multimeter. Both the SPRT and the Multimeter have calibrations that are traceable to the National Institute of Standards and Technology (NIST) or to intrinsic standards. The thermocouple type, temperature range calibrated over and the uncertainty of a confidence level of k=2 is as follows:

TC Type	Range	Uncertainty
K	70 °F to 1000 °F	± (4 °F or 0.75% of reading) (whichever is greater)

NOTES: The tolerance statement applies only to the thermocouple, and does not include any instrument used by the owner to measure it.
The results relate only to the items tested or calibrated.

Metrologist: A. Sanchez, 02541

Approved by: L.J. Azevedo, 02541
Manager

Copy to: Submitting organization
Department 02541 file

Date received: 01/14/05
Dates tested: 01/18/05

NVLAP®
Accredited by the National Voluntary Laboratory Accreditation Program for the scope of accreditation under Lab Code 105002

PRIMARY STANDARDS LABORATORY

Sandia National Laboratories, Albuquerque, New Mexico 87185-0665

CERTIFICATE

File No. 51538
LIMITED

THERMOCOUPLE	TYPE K - STD
Model No.	KQIN-116-144
Serial No.	3
Procedure No.	CP – TC (07/22/98)
Lab Conditions:	Temperature: 23 °C ± 2 °C Humidity: 40% ± 10%
Submitted by:	Organization 06113 SNL / NM
Certified:	January 18, 2005
Expires:	January 18, 2006

COPY

The thermocouple was calibrated over the temperature range of 71 °F to 1000 °F by comparison with a Standard Platinum Resistance Thermometer (SPRT). The thermocouple was calibrated in the 9122 Dry Well, with an immersion of 6 inches. The probe mV output was measured with an 8508A Fluke Multimeter. Both the SPRT and the Multimeter have calibrations that are traceable to the National Institute of Standards and Technology (NIST) or to intrinsic standards. The thermocouple type, temperature range calibrated over and the uncertainty of a confidence level of k=2 is as follows:

TC Type	Range	Uncertainty
K	70 °F to 1000 °F	± (4 °F or 0.75% of reading) (whichever is greater)

NOTES: The tolerance statement applies only to the thermocouple, and does not include any instrument used by the owner to measure it.
The results relate only to the items tested or calibrated.

Metrologist: A. Sanchez, 02541

Approved by: L.J. Azevedo, 02541
Manager

Copy to: Submitting organization
Department 02541 file

Date received: 01/14/05
Dates tested: 01/18/05

NVLAP®
Accredited by the National Voluntary Laboratory Accreditation Program for the scope of accreditation under Lab Code 105002

PRIMARY STANDARDS LABORATORY

Sandia National Laboratories, Albuquerque, New Mexico 87185-0665

CERTIFICATE

File No. 51539
LIMITED

THERMOCOUPLE	TYPE K - STD
Model No.	KQIN-116-144
Serial No.	4
Procedure No.	CP – TC (07/22/98)
Lab Conditions:	Temperature: 23 °C ± 2 °C Humidity: 40% ± 10%
Submitted by:	Organization 06113 SNL / NM
Certified:	January 18, 2005
Expires:	January 18, 2006

COPY

The thermocouple was calibrated over the temperature range of 71 °F to 1000 °F by comparison with a Standard Platinum Resistance Thermometer (SPRT). The thermocouple was calibrated in the 9122 Dry Well, with an immersion of 6 inches. The probe mV output was measured with an 8508A Fluke Multimeter. Both the SPRT and the Multimeter have calibrations that are traceable to the National Institute of Standards and Technology (NIST) or to intrinsic standards. The thermocouple type, temperature range calibrated over and the uncertainty of a confidence level of k=2 is as follows:

TC Type	Range	Uncertainty
K	70 °F to 1000 °F	± (4 °F or 0.75% of reading) (whichever is greater)

NOTES: The tolerance statement applies only to the thermocouple, and does not include any instrument used by the owner to measure it.
The results relate only to the items tested or calibrated.

Metrologist: A. Sanchez, 02541

Approved by: L.J. Azevedo, 02541
Manager

Copy to: Submitting organization
Department 02541 file

Date received: 01/14/05
Dates tested: 01/18/05

NVLAP®
Accredited by the National Voluntary Laboratory Accreditation Program for the scope of accreditation under Lab Code 105002

PRIMARY STANDARDS LABORATORY

Sandia National Laboratories, Albuquerque, New Mexico 87185-0665

CERTIFICATE

File No. 51540
LIMITED

THERMOCOUPLE	TYPE K - STD
Model No.	KQIN-116-144
Serial No.	5
Procedure No.	CP – TC (07/22/98)
Lab Conditions:	Temperature: 23 °C ± 2 °C Humidity: 40% ± 10%
Submitted by:	Organization 06113 SNL / NM
Certified:	January 18, 2005
Expires:	January 18, 2006

COPY

The thermocouple was calibrated over the temperature range of 71 °F to 1000 °F by comparison with a Standard Platinum Resistance Thermometer (SPRT). The thermocouple was calibrated in the 9122 Dry Well, with an immersion of 6 inches. The probe mV output was measured with an 8508A Fluke Multimeter. Both the SPRT and the Multimeter have calibrations that are traceable to the National Institute of Standards and Technology (NIST) or to intrinsic standards. The thermocouple type, temperature range calibrated over and the uncertainty of a confidence level of k=2 is as follows:

TC Type	Range	Uncertainty
K	70 °F to 1000 °F	± (4 °F or 0.75% of reading) (whichever is greater)

NOTES: The tolerance statement applies only to the thermocouple, and does not include any instrument used by the owner to measure it.
The results relate only to the items tested or calibrated.

Metrologist: A. Sanchez, 02541

Approved by: L.J. Azevedo, 02541
Manager

Copy to: Submitting organization
Department 02541 file

Date received: 01/14/05
Dates tested: 01/18/05

NVLAP®
Accredited by the National Voluntary Laboratory Accreditation Program for the scope of accreditation under Lab Code 105002

PRIMARY STANDARDS LABORATORY

Sandia National Laboratories, Albuquerque, New Mexico 87185-0665

CERTIFICATE

File No. 51541
LIMITED

THERMOCOUPLE	TYPE K - STD
Model No.	KQIN-116-144
Serial No.	6
Procedure No.	CP – TC (07/22/98)
Lab Conditions:	Temperature: 23 °C ± 2 °C Humidity: 40% ± 10%
Submitted by:	Organization 06113 SNL / NM
Certified:	January 18, 2005
Expires:	January 18, 2006

COPY

The thermocouple was calibrated over the temperature range of 71 °F to 1000 °F by comparison with a Standard Platinum Resistance Thermometer (SPRT). The thermocouple was calibrated in the 9122 Dry Well, with an immersion of 6 inches. The probe mV output was measured with an 8508A Fluke Multimeter. Both the SPRT and the Multimeter have calibrations that are traceable to the National Institute of Standards and Technology (NIST) or to intrinsic standards. The thermocouple type, temperature range calibrated over and the uncertainty of a confidence level of k=2 is as follows:

TC Type	Range	Uncertainty
K	70 °F to 1000 °F	± (4 °F or 0.75% of reading) (whichever is greater)

NOTES: The tolerance statement applies only to the thermocouple, and does not include any instrument used by the owner to measure it.
The results relate only to the items tested or calibrated.

Metrologist: A. Sanchez, 02541

Approved by: L.J. Azevedo, 02541
Manager

Copy to: Submitting organization
Department 02541 file

Date received: 01/14/05
Dates tested: 01/18/05

NVLAP®
Accredited by the National Voluntary Laboratory Accreditation Program for the scope of accreditation under Lab Code 105002

PRIMARY STANDARDS LABORATORY

Sandia National Laboratories, Albuquerque, New Mexico 87185-0665

CERTIFICATE

File No. 51542
LIMITED

THERMOCOUPLE	TYPE K - STD
Model No.	KQIN-116-144
Serial No.	7
Procedure No.	CP – TC (07/22/98)
Lab Conditions:	Temperature: 23 °C ± 2 °C Humidity: 40% ± 10%
Submitted by:	Organization 06113 SNL / NM
Certified:	January 18, 2005
Expires:	January 18, 2006

COPY

The thermocouple was calibrated over the temperature range of 71 °F to 1000 °F by comparison with a Standard Platinum Resistance Thermometer (SPRT). The thermocouple was calibrated in the 9122 Dry Well, with an immersion of 6 inches. The probe mV output was measured with an 8508A Fluke Multimeter. Both the SPRT and the Multimeter have calibrations that are traceable to the National Institute of Standards and Technology (NIST) or to intrinsic standards. The thermocouple type, temperature range calibrated over and the uncertainty of a confidence level of k=2 is as follows:

TC Type	Range	Uncertainty
K	70 °F to 1000 °F	± (4 °F or 0.75% of reading) (whichever is greater)

NOTES: The tolerance statement applies only to the thermocouple, and does not include any instrument used by the owner to measure it.
The results relate only to the items tested or calibrated.

Metrologist: A. Sanchez, 02541

Approved by: L.J. Azevedo, 02541
Manager

Copy to: Submitting organization
Department 02541 file

Date received: 01/14/05
Dates tested: 01/18/05

NVLAP®
Accredited by the National Voluntary Laboratory Accreditation Program
for the scope of accreditation under Lab Code 105002

PRIMARY STANDARDS LABORATORY

Sandia National Laboratories, Albuquerque, New Mexico 87185-0665

CERTIFICATE

File No. 51543
LIMITED

THERMOCOUPLE	TYPE K - STD
Model No.	KQIN-116-144
Serial No.	8
Procedure No.	CP – TC (07/22/98)
Lab Conditions:	Temperature: 23 °C ± 2 °C Humidity: 40% ± 10%
Submitted by:	Organization 06113 SNL / NM
Certified:	January 18, 2005
Expires:	January 18, 2006

COPY

The thermocouple was calibrated over the temperature range of 71 °F to 1000 °F by comparison with a Standard Platinum Resistance Thermometer (SPRT). The thermocouple was calibrated in the 9122 Dry Well, with an immersion of 6 inches. The probe mV output was measured with an 8508A Fluke Multimeter. Both the SPRT and the Multimeter have calibrations that are traceable to the National Institute of Standards and Technology (NIST) or to intrinsic standards. The thermocouple type, temperature range calibrated over and the uncertainty of a confidence level of k=2 is as follows:

TC Type	Range	Uncertainty
K	70 °F to 1000 °F	± (4 °F or 0.75% of reading) (whichever is greater)

NOTES: The tolerance statement applies only to the thermocouple, and does not include any instrument used by the owner to measure it.
The results relate only to the items tested or calibrated.

Metrologist: A. Sanchez, 02541

Approved by: L.J. Azevedo, 02541
Manager

Copy to: Submitting organization
Department 02541 file

Date received: 01/14/05
Dates tested: 01/18/05

NVLAP®
Accredited by the National Voluntary Laboratory Accreditation Program
for the scope of accreditation under Lab Code 105002

PRIMARY STANDARDS LABORATORY

Sandia National Laboratories, Albuquerque, New Mexico 87185-0665

CERTIFICATE

File No. 51544
LIMITED

THERMOCOUPLE	TYPE K - STD
Model No.	KQIN-116-144
Serial No.	9
Procedure No.	CP – TC (07/22/98)
Lab Conditions:	Temperature: 23 °C ± 2 °C Humidity: 40% ± 10%
Submitted by:	Organization 06113 SNL / NM
Certified:	January 18, 2005
Expires:	January 18, 2006

COPY

The thermocouple was calibrated over the temperature range of 71 °F to 1000 °F by comparison with a Standard Platinum Resistance Thermometer (SPRT). The thermocouple was calibrated in the 9122 Dry Well, with an immersion of 6 inches. The probe mV output was measured with an 8508A Fluke Multimeter. Both the SPRT and the Multimeter have calibrations that are traceable to the National Institute of Standards and Technology (NIST) or to intrinsic standards. The thermocouple type, temperature range calibrated over and the uncertainty of a confidence level of k=2 is as follows:

TC Type	Range	Uncertainty
K	70 °F to 1000 °F	± (4 °F or 0.75% of reading) (whichever is greater)

NOTES: The tolerance statement applies only to the thermocouple, and does not include any instrument used by the owner to measure it.
The results relate only to the items tested or calibrated.

Metrologist: A. Sanchez, 02541

Approved by: L.J. Azevedo, 02541
Manager

Copy to: Submitting organization
Department 02541 file

Date received: 01/14/05
Dates tested: 01/18/05

NVLAP®
Accredited by the National Voluntary Laboratory Accreditation Program for the scope of accreditation under Lab Code 105002

PRIMARY STANDARDS LABORATORY

Sandia National Laboratories, Albuquerque, New Mexico 87185-0665

CERTIFICATE

File No. 51545
LIMITED

THERMOCOUPLE	TYPE K - STD
Model No.	KQIN-116-144
Serial No.	10
Procedure No.	CP – TC (07/22/98)
Lab Conditions:	Temperature: 23 °C ± 2 °C Humidity: 40% ± 10%
Submitted by:	Organization 06113 SNL / NM
Certified:	January 18, 2005
Expires:	January 18, 2006

COPY

The thermocouple was calibrated over the temperature range of 71 °F to 1000 °F by comparison with a Standard Platinum Resistance Thermometer (SPRT). The thermocouple was calibrated in the 9122 Dry Well, with an immersion of 6 inches. The probe mV output was measured with an 8508A Fluke Multimeter. Both the SPRT and the Multimeter have calibrations that are traceable to the National Institute of Standards and Technology (NIST) or to intrinsic standards. The thermocouple type, temperature range calibrated over and the uncertainty of a confidence level of k=2 is as follows:

TC Type	Range	Uncertainty
K	70 °F to 1000 °F	± (4 °F or 0.75% of reading) (whichever is greater)

NOTES: The tolerance statement applies only to the thermocouple, and does not include any instrument used by the owner to measure it.
The results relate only to the items tested or calibrated.

Metrologist: A. Sanchez, 02541

Approved by: L.J. Azevedo, 02541
Manager

Copy to: Submitting organization
Department 02541 file

Date received: 01/14/05
Dates tested: 01/18/05

NVLAP®
Accredited by the National Voluntary Laboratory Accreditation Program for the scope of accreditation under Lab Code 105002

PRIMARY STANDARDS LABORATORY

Sandia National Laboratories, Albuquerque, New Mexico 87185-0665

CERTIFICATE

File No. 51546
LIMITED

THERMOCOUPLE	TYPE K - STD
Model No.	KQIN-116-144
Serial No.	11
Procedure No.	CP – TC (07/22/98)
Lab Conditions:	Temperature: 23 °C ± 2 °C Humidity: 40% ± 10%
Submitted by:	Organization 06113 SNL / NM
Certified:	January 18, 2005
Expires:	January 18, 2006

COPY

The thermocouple was calibrated over the temperature range of 71 °F to 1000 °F by comparison with a Standard Platinum Resistance Thermometer (SPRT). The thermocouple was calibrated in the 9122 Dry Well, with an immersion of 6 inches. The probe mV output was measured with an 8508A Fluke Multimeter. Both the SPRT and the Multimeter have calibrations that are traceable to the National Institute of Standards and Technology (NIST) or to intrinsic standards. The thermocouple type, temperature range calibrated over and the uncertainty of a confidence level of k=2 is as follows:

TC Type	Range	Uncertainty
K	70 °F to 1000 °F	± (4 °F or 0.75% of reading) (whichever is greater)

NOTES: The tolerance statement applies only to the thermocouple, and does not include any instrument used by the owner to measure it.
The results relate only to the items tested or calibrated.

Metrologist: A. Sanchez, 02541

Approved by: L.J. Azevedo, 02541
Manager

Copy to: Submitting organization
Department 02541 file

Date received: 01/14/05
Dates tested: 01/18/05

NVLAP®
Accredited by the National Voluntary Laboratory Accreditation Program for the scope of accreditation under Lab Code 105002

PRIMARY STANDARDS LABORATORY

Sandia National Laboratories, Albuquerque, New Mexico 87185-0665

CERTIFICATE

File No. 51547
LIMITED

THERMOCOUPLE	TYPE K - STD
Model No.	KQIN-116-144
Serial No.	12
Procedure No.	CP – TC (07/22/98)
Lab Conditions:	Temperature: 23 °C ± 2 °C Humidity: 40% ± 10%
Submitted by:	Organization 06113 SNL / NM
Certified:	January 18, 2005
Expires:	January 18, 2006

COPY

The thermocouple was calibrated over the temperature range of 71 °F to 1000 °F by comparison with a Standard Platinum Resistance Thermometer (SPRT). The thermocouple was calibrated in the 9122 Dry Well, with an immersion of 6 inches. The probe mV output was measured with an 8508A Fluke Multimeter. Both the SPRT and the Multimeter have calibrations that are traceable to the National Institute of Standards and Technology (NIST) or to intrinsic standards. The thermocouple type, temperature range calibrated over and the uncertainty of a confidence level of k=2 is as follows:

TC Type	Range	Uncertainty
K	70 °F to 1000 °F	± (4 °F or 0.75% of reading) (whichever is greater)

NOTES: The tolerance statement applies only to the thermocouple, and does not include any instrument used by the owner to measure it.
The results relate only to the items tested or calibrated.

Metrologist: A. Sanchez, 02541

Approved by: L.J. Azevedo, 02541
Manager

Copy to: Submitting organization
Department 02541 file

Date received: 01/14/05
Dates tested: 01/18/05

NVLAP®
Accredited by the National Voluntary Laboratory Accreditation Program for the scope of accreditation under Lab Code 105002

PRIMARY STANDARDS LABORATORY

Sandia National Laboratories, Albuquerque, New Mexico 87185-0665

CERTIFICATE

File No. 51548
LIMITED

THERMOCOUPLE	TYPE K - STD
Model No.	KQIN-116-144
Serial No.	13
Procedure No.	CP – TC (07/22/98)
Lab Conditions:	Temperature: 23 °C ± 2 °C Humidity: 40% ± 10%
Submitted by:	Organization 06113 SNL / NM
Certified:	January 18, 2005
Expires:	January 18, 2006

COPY

The thermocouple was calibrated over the temperature range of 71 °F to 1000 °F by comparison with a Standard Platinum Resistance Thermometer (SPRT). The thermocouple was calibrated in the 9122 Dry Well, with an immersion of 6 inches. The probe mV output was measured with an 8508A Fluke Multimeter. Both the SPRT and the Multimeter have calibrations that are traceable to the National Institute of Standards and Technology (NIST) or to intrinsic standards. The thermocouple type, temperature range calibrated over and the uncertainty of a confidence level of k=2 is as follows:

TC Type	Range	Uncertainty
K	70 °F to 1000 °F	± (4 °F or 0.75% of reading) (whichever is greater)

NOTES: The tolerance statement applies only to the thermocouple, and does not include any instrument used by the owner to measure it.
The results relate only to the items tested or calibrated.

Metrologist: A. Sanchez, 02541

Approved by: L.J. Azevedo, 02541
Manager

Copy to: Submitting organization
Department 02541 file

Date received: 01/14/05
Dates tested: 01/18/05

NVLAP®
Accredited by the National Voluntary Laboratory Accreditation Program for the scope of accreditation under Lab Code 105002

PRIMARY STANDARDS LABORATORY

Sandia National Laboratories, Albuquerque, New Mexico 87185-0665

CERTIFICATE

File No. 51549
LIMITED

THERMOCOUPLE	TYPE K - STD
Model No.	KQIN-116-144
Serial No.	14
Procedure No.	CP – TC (07/22/98)
Lab Conditions:	Temperature: 23 °C ± 2 °C Humidity: 40% ± 10%
Submitted by:	Organization 06113 SNL / NM
Certified:	January 18, 2005
Expires:	January 18, 2006

COPY

The thermocouple was calibrated over the temperature range of 71 °F to 1000 °F by comparison with a Standard Platinum Resistance Thermometer (SPRT). The thermocouple was calibrated in the 9122 Dry Well, with an immersion of 6 inches. The probe mV output was measured with an 8508A Fluke Multimeter. Both the SPRT and the Multimeter have calibrations that are traceable to the National Institute of Standards and Technology (NIST) or to intrinsic standards. The thermocouple type, temperature range calibrated over and the uncertainty of a confidence level of k=2 is as follows:

TC Type	Range	Uncertainty
K	70 °F to 1000 °F	± (4 °F or 0.75% of reading) (whichever is greater)

NOTES: The tolerance statement applies only to the thermocouple, and does not include any instrument used by the owner to measure it.
The results relate only to the items tested or calibrated.

Metrologist: A. Sanchez, 02541

Approved by: L.J. Azevedo, 02541
Manager

Copy to: Submitting organization
Department 02541 file

Date received: 01/14/05
Dates tested: 01/18/05

NVLAP®
Accredited by the National Voluntary Laboratory Accreditation Program
for the scope of accreditation under Lab Code 105002

PRIMARY STANDARDS LABORATORY

Sandia National Laboratories, Albuquerque, New Mexico 87185-0665

CERTIFICATE

File No. 51550
LIMITED

THERMOCOUPLE	TYPE K - STD
Model No.	KQIN-116-144
Serial No.	15
Procedure No.	CP – TC (07/22/98)
Lab Conditions:	Temperature: 23 °C ± 2 °C Humidity: 40% ± 10%
Submitted by:	Organization 06113 SNL / NM
Certified:	January 18, 2005
Expires:	January 18, 2006

COPY

The thermocouple was calibrated over the temperature range of 71 °F to 1000 °F by comparison with a Standard Platinum Resistance Thermometer (SPRT). The thermocouple was calibrated in the 9122 Dry Well, with an immersion of 6 inches. The probe mV output was measured with an 8508A Fluke Multimeter. Both the SPRT and the Multimeter have calibrations that are traceable to the National Institute of Standards and Technology (NIST) or to intrinsic standards. The thermocouple type, temperature range calibrated over and the uncertainty of a confidence level of k=2 is as follows:

TC Type	Range	Uncertainty
K	70 °F to 1000 °F	± (4 °F or 0.75% of reading) (whichever is greater)

NOTES: The tolerance statement applies only to the thermocouple, and does not include any instrument used by the owner to measure it.
The results relate only to the items tested or calibrated.

Metrologist: A. Sanchez, 02541

Approved by: L.J. Azevedo, 02541
Manager

Copy to: Submitting organization
Department 02541 file

Date received: 01/14/05
Dates tested: 01/18/05

NVLAP®
Accredited by the National Voluntary Laboratory Accreditation Program for the scope of accreditation under Lab Code 105002

PRIMARY STANDARDS LABORATORY

Sandia National Laboratories, Albuquerque, New Mexico 87185-0665

CERTIFICATE

File No. 51551
LIMITED

THERMOCOUPLE	TYPE K - STD
Model No.	KQIN-116-144
Serial No.	16
Procedure No.	CP – TC (07/22/98)
Lab Conditions:	Temperature: 23 °C ± 2 °C Humidity: 40% ± 10%
Submitted by:	Organization 06113 SNL / NM
Certified:	January 18, 2005
Expires:	January 18, 2006

COPY

The thermocouple was calibrated over the temperature range of 71 °F to 1000 °F by comparison with a Standard Platinum Resistance Thermometer (SPRT). The thermocouple was calibrated in the 9122 Dry Well, with an immersion of 6 inches. The probe mV output was measured with an 8508A Fluke Multimeter. Both the SPRT and the Multimeter have calibrations that are traceable to the National Institute of Standards and Technology (NIST) or to intrinsic standards. The thermocouple type, temperature range calibrated over and the uncertainty of a confidence level of k=2 is as follows:

TC Type	Range	Uncertainty
K	70 °F to 1000 °F	± (4 °F or 0.75% of reading) (whichever is greater)

NOTES: The tolerance statement applies only to the thermocouple, and does not include any instrument used by the owner to measure it.
The results relate only to the items tested or calibrated.

Metrologist: A. Sanchez, 02541

Approved by: L.J. Azevedo, 02541
Manager

Copy to: Submitting organization
Department 02541 file

Date received: 01/14/05
Dates tested: 01/18/05

NVLAP®
Accredited by the National Voluntary Laboratory Accreditation Program for the scope of accreditation under Lab Code 105002

PRIMARY STANDARDS LABORATORY

Sandia National Laboratories, Albuquerque, New Mexico 87185-0665

CERTIFICATE

File No. 51552
LIMITED

THERMOCOUPLE	TYPE K - STD
Model No.	KQIN-116-144
Serial No.	17
Procedure No.	CP – TC (07/22/98)
Lab Conditions:	Temperature: 23 °C ± 2 °C Humidity: 40% ± 10%
Submitted by:	Organization 06113 SNL / NM
Certified:	January 18, 2005
Expires:	January 18, 2006

COPY

The thermocouple was calibrated over the temperature range of 71 °F to 1000 °F by comparison with a Standard Platinum Resistance Thermometer (SPRT). The thermocouple was calibrated in the 9122 Dry Well, with an immersion of 6 inches. The probe mV output was measured with an 8508A Fluke Multimeter. Both the SPRT and the Multimeter have calibrations that are traceable to the National Institute of Standards and Technology (NIST) or to intrinsic standards. The thermocouple type, temperature range calibrated over and the uncertainty of a confidence level of k=2 is as follows:

TC Type	Range	Uncertainty
K	70 °F to 1000 °F	± (4 °F or 0.75% of reading) (whichever is greater)

NOTES: The tolerance statement applies only to the thermocouple, and does not include any instrument used by the owner to measure it.
The results relate only to the items tested or calibrated.

Metrologist: A. Sanchez, 02541

Approved by: L.J. Azevedo, 02541
Manager

Copy to: Submitting organization
Department 02541 file

Date received: 01/14/05
Dates tested: 01/18/05

NVLAP®
Accredited by the National Voluntary Laboratory Accreditation Program
for the scope of accreditation under Lab Code 105002

PRIMARY STANDARDS LABORATORY

Sandia National Laboratories, Albuquerque, New Mexico 87185-0665

CERTIFICATE

File No. 51553
LIMITED

THERMOCOUPLE	TYPE K - STD
Model No.	KQIN-116-144
Serial No.	18
Procedure No.	CP – TC (07/22/98)
Lab Conditions:	Temperature: 23 °C ± 2 °C Humidity: 40% ± 10%
Submitted by:	Organization 06113 SNL / NM
Certified:	January 18, 2005
Expires:	January 18, 2006

COPY

The thermocouple was calibrated over the temperature range of 71 °F to 1000 °F by comparison with a Standard Platinum Resistance Thermometer (SPRT). The thermocouple was calibrated in the 9122 Dry Well, with an immersion of 6 inches. The probe mV output was measured with an 8508A Fluke Multimeter. Both the SPRT and the Multimeter have calibrations that are traceable to the National Institute of Standards and Technology (NIST) or to intrinsic standards. The thermocouple type, temperature range calibrated over and the uncertainty of a confidence level of k=2 is as follows:

TC Type	Range	Uncertainty
K	70 °F to 1000 °F	± (4 °F or 0.75% of reading) (whichever is greater)

NOTES: The tolerance statement applies only to the thermocouple, and does not include any instrument used by the owner to measure it.
The results relate only to the items tested or calibrated.

Metrologist: A. Sanchez, 02541

Approved by: L.J. Azevedo, 02541
Manager

Copy to: Submitting organization
Department 02541 file

Date received: 01/14/05
Dates tested: 01/18/05

NVLAP®
Accredited by the National Voluntary Laboratory Accreditation Program for the scope of accreditation under Lab Code 105002

PRIMARY STANDARDS LABORATORY

Sandia National Laboratories, Albuquerque, New Mexico 87185-0665

CERTIFICATE

File No. 51554
LIMITED

THERMOCOUPLE	TYPE K - STD
Model No.	KQIN-116-144
Serial No.	19
Procedure No.	CP – TC (07/22/98)
Lab Conditions:	Temperature: 23 °C ± 2 °C Humidity: 40% ± 10%
Submitted by:	Organization 06113 SNL / NM
Certified:	January 18, 2005
Expires:	January 18, 2006

COPY

The thermocouple was calibrated over the temperature range of 71 °F to 1000 °F by comparison with a Standard Platinum Resistance Thermometer (SPRT). The thermocouple was calibrated in the 9122 Dry Well, with an immersion of 6 inches. The probe mV output was measured with an 8508A Fluke Multimeter. Both the SPRT and the Multimeter have calibrations that are traceable to the National Institute of Standards and Technology (NIST) or to intrinsic standards. The thermocouple type, temperature range calibrated over and the uncertainty of a confidence level of k=2 is as follows:

TC Type	Range	Uncertainty
K	70 °F to 1000 °F	± (4 °F or 0.75% of reading) (whichever is greater)

NOTES: The tolerance statement applies only to the thermocouple, and does not include any instrument used by the owner to measure it.
The results relate only to the items tested or calibrated.

Metrologist: A. Sanchez, 02541

Approved by: L.J. Azevedo, 02541
Manager

Copy to: Submitting organization
Department 02541 file

Date received: 01/14/05
Dates tested: 01/18/05

NVLAP®
Accredited by the National Voluntary Laboratory Accreditation Program
for the scope of accreditation under Lab Code 105002

PRIMARY STANDARDS LABORATORY

Sandia National Laboratories, Albuquerque, New Mexico 87185-0665

CERTIFICATE

File No. 51555
LIMITED

THERMOCOUPLE	TYPE K - STD
Model No.	KQIN-116-144
Serial No.	20
Procedure No.	CP – TC (07/22/98)
Lab Conditions:	Temperature: 23 °C ± 2 °C Humidity: 40% ± 10%
Submitted by:	Organization 06113 SNL / NM
Certified:	January 18, 2005
Expires:	January 18, 2006

COPY

The thermocouple was calibrated over the temperature range of 71 °F to 1000 °F by comparison with a Standard Platinum Resistance Thermometer (SPRT). The thermocouple was calibrated in the 9122 Dry Well, with an immersion of 6 inches. The probe mV output was measured with an 8508A Fluke Multimeter. Both the SPRT and the Multimeter have calibrations that are traceable to the National Institute of Standards and Technology (NIST) or to intrinsic standards. The thermocouple type, temperature range calibrated over and the uncertainty of a confidence level of k=2 is as follows:

TC Type	Range	Uncertainty
K	70 °F to 1000 °F	± (4 °F or 0.75% of reading) (whichever is greater)

NOTES: The tolerance statement applies only to the thermocouple, and does not include any instrument used by the owner to measure it.
The results relate only to the items tested or calibrated.

Metrologist: A. Sanchez, 02541

Approved by: L.J. Azevedo, 02541
Manager

Copy to: Submitting organization
Department 02541 file

Date received: 01/14/05
Dates tested: 01/18/05

NVLAP®
Accredited by the National Voluntary Laboratory Accreditation Program
for the scope of accreditation under Lab Code 105002

PRIMARY STANDARDS LABORATORY

Sandia National Laboratories, Albuquerque, New Mexico 87185-0665

CERTIFICATE

File No. 51556
LIMITED

THERMOCOUPLE	TYPE K - STD
Model No.	KQIN-116-144
Serial No.	21
Procedure No.	CP – TC (07/22/98)
Lab Conditions:	Temperature: 23 °C ± 2 °C Humidity: 40% ± 10%
Submitted by:	Organization 06113 SNL / NM
Certified:	January 26, 2005
Expires:	January 26, 2006

COPY

The thermocouple was calibrated over the temperature range of 71 °F to 1000 °F by comparison with a Standard Platinum Resistance Thermometer (SPRT). The thermocouple was calibrated in the 9122 Dry Well, with an immersion of 6 inches. The probe mV output was measured with an 8508A Fluke Multimeter. Both the SPRT and the Multimeter have calibrations that are traceable to the National Institute of Standards and Technology (NIST) or to intrinsic standards. The thermocouple type, temperature range calibrated over and the uncertainty of a confidence level of k=2 is as follows:

TC Type	Range	Uncertainty
K	70 °F to 1000 °F	± (4 °F or 0.75% of reading) (whichever is greater)

NOTES: The tolerance statement applies only to the thermocouple, and does not include any instrument used by the owner to measure it.
The results relate only to the items tested or calibrated.

Metrologist: A. Sanchez, 02541

Approved by: L.J. Azevedo, 02541
Manager

Copy to: Submitting organization
Department 02541 file

Date received: 01/14/05
Dates tested: 01/26/05

NVLAP®
Accredited by the National Voluntary Laboratory Accreditation Program
for the scope of accreditation under Lab Code 105002

PRIMARY STANDARDS LABORATORY

Sandia National Laboratories, Albuquerque, New Mexico 87185-0665

CERTIFICATE

File No. 51557
LIMITED

THERMOCOUPLE	TYPE K - STD
Model No.	KQIN-116-144
Serial No.	22
Procedure No.	CP – TC (07/22/98)
Lab Conditions:	Temperature: 23 °C ± 2 °C Humidity: 40% ± 10%
Submitted by:	Organization 06113 SNL / NM
Certified:	January 26, 2005
Expires:	January 26, 2006

COPY

The thermocouple was calibrated over the temperature range of 71 °F to 1000 °F by comparison with a Standard Platinum Resistance Thermometer (SPRT). The thermocouple was calibrated in the 9122 Dry Well, with an immersion of 6 inches. The probe mV output was measured with an 8508A Fluke Multimeter. Both the SPRT and the Multimeter have calibrations that are traceable to the National Institute of Standards and Technology (NIST) or to intrinsic standards. The thermocouple type, temperature range calibrated over and the uncertainty of a confidence level of k=2 is as follows:

TC Type	Range	Uncertainty
K	70 °F to 1000 °F	± (4 °F or 0.75% of reading) (whichever is greater)

NOTES: The tolerance statement applies only to the thermocouple, and does not include any instrument used by the owner to measure it.
The results relate only to the items tested or calibrated.

Metrologist: A. Sanchez, 02541

Approved by: L.J. Azevedo, 02541
Manager

Copy to: Submitting organization
Department 02541 file

Date received: 01/14/05
Dates tested: 01/26/05

NVLAP®
Accredited by the National Voluntary Laboratory Accreditation Program for the scope of accreditation under Lab Code 105002

PRIMARY STANDARDS LABORATORY

Sandia National Laboratories, Albuquerque, New Mexico 87185-0665

CERTIFICATE

File No. 51558
LIMITED

THERMOCOUPLE	TYPE K - STD
Model No.	KQIN-116-144
Serial No.	23
Procedure No.	CP – TC (07/22/98)
Lab Conditions:	Temperature: 23 °C ± 2 °C Humidity: 40% ± 10%
Submitted by:	Organization 06113 SNL / NM
Certified:	January 26, 2005
Expires:	January 26, 2006

COPY

The thermocouple was calibrated over the temperature range of 71 °F to 1000 °F by comparison with a Standard Platinum Resistance Thermometer (SPRT). The thermocouple was calibrated in the 9122 Dry Well, with an immersion of 6 inches. The probe mV output was measured with an 8508A Fluke Multimeter. Both the SPRT and the Multimeter have calibrations that are traceable to the National Institute of Standards and Technology (NIST) or to intrinsic standards. The thermocouple type, temperature range calibrated over and the uncertainty of a confidence level of k=2 is as follows:

TC Type	Range	Uncertainty
K	70 °F to 1000 °F	± (4 °F or 0.75% of reading) (whichever is greater)

NOTES: The tolerance statement applies only to the thermocouple, and does not include any instrument used by the owner to measure it.
The results relate only to the items tested or calibrated.

Metrologist: A. Sanchez, 02541

Approved by: L.J. Azevedo, 02541
Manager

Copy to: Submitting organization
Department 02541 file

Date received: 01/14/05
Dates tested: 01/26/05

NVLAP®
Accredited by the National Voluntary Laboratory Accreditation Program for the scope of accreditation under Lab Code 105002

PRIMARY STANDARDS LABORATORY

Sandia National Laboratories, Albuquerque, New Mexico 87185-0665

CERTIFICATE

THERMOCOUPLE	TYPE K - STD	File No. 51559
Model No.	KQIN-116-144	*LIMITED*
Serial No.	24	
Procedure No.	CP – TC (07/22/98)	
Lab Conditions:	Temperature: 23 °C ± 2 °C	Humidity: 40% ± 10%

Submitted by: Organization 06113
SNL / NM

COPY

Certified: January 26, 2005
Expires: January 26, 2006

The thermocouple was calibrated over the temperature range of 71 °F to 1000 °F by comparison with a Standard Platinum Resistance Thermometer (SPRT). The thermocouple was calibrated in the 9122 Dry Well, with an immersion of 6 inches. The probe mV output was measured with an 8508A Fluke Multimeter. Both the SPRT and the Multimeter have calibrations that are traceable to the National Institute of Standards and Technology (NIST) or to intrinsic standards. The thermocouple type, temperature range calibrated over and the uncertainty of a confidence level of k=2 is as follows:

TC Type	Range	Uncertainty
K	70 °F to 1000 °F	± (4 °F or 0.75% of reading) (whichever is greater)

NOTES: The tolerance statement applies only to the thermocouple, and does not include any instrument used by the owner to measure it.
The results relate only to the items tested or calibrated.

Metrologist: A. Sanchez, 02541

Approved by: L.J. Azevedo, 02541
Manager

Copy to: Submitting organization
Department 02541 file

Date received: 01/14/05
Dates tested: 01/26/05

NVLAP®
Accredited by the National Voluntary Laboratory Accreditation Program for the scope of accreditation under Lab Code 105002

PRIMARY STANDARDS LABORATORY

Sandia National Laboratories, Albuquerque, New Mexico 87185-0665

CERTIFICATE

File No. 51560
LIMITED

THERMOCOUPLE	TYPE K - STD
Model No.	KQIN-116-144
Serial No.	25
Procedure No.	CP – TC (07/22/98)
Lab Conditions:	Temperature: 23 °C ± 2 °C Humidity: 40% ± 10%
Submitted by:	Organization 06113 SNL / NM
Certified:	January 26, 2005
Expires:	January 26, 2006

COPY

The thermocouple was calibrated over the temperature range of 71 °F to 1000 °F by comparison with a Standard Platinum Resistance Thermometer (SPRT). The thermocouple was calibrated in the 9122 Dry Well, with an immersion of 6 inches. The probe mV output was measured with an 8508A Fluke Multimeter. Both the SPRT and the Multimeter have calibrations that are traceable to the National Institute of Standards and Technology (NIST) or to intrinsic standards. The thermocouple type, temperature range calibrated over and the uncertainty of a confidence level of k=2 is as follows:

TC Type	Range	Uncertainty
K	70 °F to 1000 °F	± (4 °F or 0.75% of reading) (whichever is greater)

NOTES: The tolerance statement applies only to the thermocouple, and does not include any instrument used by the owner to measure it.
The results relate only to the items tested or calibrated.

Metrologist: A. Sanchez, 02541

Approved by: L.J. Azevedo, 02541
Manager

Copy to: Submitting organization
Department 02541 file

Date received: 01/14/05
Dates tested: 01/26/05

NVLAP®
Accredited by the National Voluntary Laboratory Accreditation Program for the scope of accreditation under Lab Code 105002

PRIMARY STANDARDS LABORATORY

Sandia National Laboratories, Albuquerque, New Mexico 87185-0665

CERTIFICATE

File No. 51561
LIMITED

THERMOCOUPLE	TYPE K - STD
Model No.	KQIN-116-144
Serial No.	26
Procedure No.	CP – TC (07/22/98)
Lab Conditions:	Temperature: 23 °C ± 2 °C Humidity: 40% ± 10%
Submitted by:	Organization 06113 SNL / NM
Certified:	January 26, 2005
Expires:	January 26, 2006

COPY

The thermocouple was calibrated over the temperature range of 71 °F to 1000 °F by comparison with a Standard Platinum Resistance Thermometer (SPRT). The thermocouple was calibrated in the 9122 Dry Well, with an immersion of 6 inches. The probe mV output was measured with an 8508A Fluke Multimeter. Both the SPRT and the Multimeter have calibrations that are traceable to the National Institute of Standards and Technology (NIST) or to intrinsic standards. The thermocouple type, temperature range calibrated over and the uncertainty of a confidence level of k=2 is as follows:

TC Type	Range	Uncertainty
K	70 °F to 1000 °F	± (4 °F or 0.75% of reading) (whichever is greater)

NOTES: The tolerance statement applies only to the thermocouple, and does not include any instrument used by the owner to measure it.
The results relate only to the items tested or calibrated.

Metrologist: A. Sanchez, 02541

Approved by: L.J. Azevedo, 02541
Manager

Copy to: Submitting organization
Department 02541 file

Date received: 01/14/05
Dates tested: 01/26/05

NVLAP®
Accredited by the National Voluntary Laboratory Accreditation Program for the scope of accreditation under Lab Code 105002

PRIMARY STANDARDS LABORATORY

Sandia National Laboratories, Albuquerque, New Mexico 87185-0665

CERTIFICATE

File No. 51562
LIMITED

THERMOCOUPLE	TYPE K - STD
Model No.	KQIN-116-144
Serial No.	27
Procedure No.	CP – TC (07/22/98)
Lab Conditions:	Temperature: 23 °C ± 2 °C Humidity: 40% ± 10%
Submitted by:	Organization 06113 SNL / NM
Certified:	January 26, 2005
Expires:	January 26, 2006

COPY

The thermocouple was calibrated over the temperature range of 71 °F to 1000 °F by comparison with a Standard Platinum Resistance Thermometer (SPRT). The thermocouple was calibrated in the 9122 Dry Well, with an immersion of 6 inches. The probe mV output was measured with an 8508A Fluke Multimeter. Both the SPRT and the Multimeter have calibrations that are traceable to the National Institute of Standards and Technology (NIST) or to intrinsic standards. The thermocouple type, temperature range calibrated over and the uncertainty of a confidence level of k=2 is as follows:

TC Type	Range	Uncertainty
K	70 °F to 1000 °F	± (4 °F or 0.75% of reading) (whichever is greater)

NOTES: The tolerance statement applies only to the thermocouple, and does not include any instrument used by the owner to measure it.
The results relate only to the items tested or calibrated.

Metrologist: A. Sanchez, 02541

Approved by: L.J. Azevedo, 02541
Manager

Copy to: Submitting organization
Department 02541 file

Date received: 01/14/05
Dates tested: 01/26/05

NVLAP®
Accredited by the National Voluntary Laboratory Accreditation Program for the scope of accreditation under Lab Code 105002

PRIMARY STANDARDS LABORATORY

Sandia National Laboratories, Albuquerque, New Mexico 87185-0665

CERTIFICATE

File No. 51563
LIMITED

THERMOCOUPLE	TYPE K - STD
Model No.	KQIN-116-144
Serial No.	28
Procedure No.	CP – TC (07/22/98)
Lab Conditions:	Temperature: 23 °C ± 2 °C Humidity: 40% ± 10%
Submitted by:	Organization 06113 SNL / NM
Certified:	January 26, 2005
Expires:	January 26, 2006

COPY

The thermocouple was calibrated over the temperature range of 71 °F to 1000 °F by comparison with a Standard Platinum Resistance Thermometer (SPRT). The thermocouple was calibrated in the 9122 Dry Well, with an immersion of 6 inches. The probe mV output was measured with an 8508A Fluke Multimeter. Both the SPRT and the Multimeter have calibrations that are traceable to the National Institute of Standards and Technology (NIST) or to intrinsic standards. The thermocouple type, temperature range calibrated over and the uncertainty of a confidence level of k=2 is as follows:

TC Type	Range	Uncertainty
K	70 °F to 1000 °F	± (4 °F or 0.75% of reading) (whichever is greater)

NOTES: The tolerance statement applies only to the thermocouple, and does not include any instrument used by the owner to measure it.
The results relate only to the items tested or calibrated.

Metrologist: A. Sanchez, 02541

Approved by: L.J. Azevedo, 02541
Manager

Copy to: Submitting organization
Department 02541 file

Date received: 01/14/05
Dates tested: 01/26/05

NVLAP®
Accredited by the National Voluntary Laboratory Accreditation Program for the scope of accreditation under Lab Code 105002

PRIMARY STANDARDS LABORATORY

Sandia National Laboratories, Albuquerque, New Mexico 87185-0665

CERTIFICATE

File No. 51564
LIMITED

THERMOCOUPLE	TYPE K - STD
Model No.	KQIN-116-144
Serial No.	29
Procedure No.	CP – TC (07/22/98)
Lab Conditions:	Temperature: 23 °C ± 2 °C Humidity: 40% ± 10%
Submitted by:	Organization 06113 SNL / NM
Certified:	January 26, 2005
Expires:	January 26, 2006

COPY

The thermocouple was calibrated over the temperature range of 71 °F to 1000 °F by comparison with a Standard Platinum Resistance Thermometer (SPRT). The thermocouple was calibrated in the 9122 Dry Well, with an immersion of 6 inches. The probe mV output was measured with an 8508A Fluke Multimeter. Both the SPRT and the Multimeter have calibrations that are traceable to the National Institute of Standards and Technology (NIST) or to intrinsic standards. The thermocouple type, temperature range calibrated over and the uncertainty of a confidence level of k=2 is as follows:

TC Type	Range	Uncertainty
K	70 °F to 1000 °F	± (4 °F or 0.75% of reading) (whichever is greater)

NOTES: The tolerance statement applies only to the thermocouple, and does not include any instrument used by the owner to measure it.
The results relate only to the items tested or calibrated.

Metrologist: A. Sanchez, 02541

Approved by: L.J. Azevedo, 02541
Manager

Copy to: Submitting organization
Department 02541 file

Date received: 01/14/05
Dates tested: 01/26/05

NVLAP®
Accredited by the National Voluntary Laboratory Accreditation Program for the scope of accreditation under Lab Code 105002

PRIMARY STANDARDS LABORATORY

Sandia National Laboratories, Albuquerque, New Mexico 87185-0665

CERTIFICATE

File No. 51565
LIMITED

THERMOCOUPLE	TYPE K - STD
Model No.	KQIN-116-144
Serial No.	30
Procedure No.	CP – TC (07/22/98)
Lab Conditions:	Temperature: 23 °C ± 2 °C Humidity: 40% ± 10%
Submitted by:	Organization 06113 SNL / NM
Certified:	January 26, 2005
Expires:	January 26, 2006

COPY

The thermocouple was calibrated over the temperature range of 71 °F to 1000 °F by comparison with a Standard Platinum Resistance Thermometer (SPRT). The thermocouple was calibrated in the 9122 Dry Well, with an immersion of 6 inches. The probe mV output was measured with an 8508A Fluke Multimeter. Both the SPRT and the Multimeter have calibrations that are traceable to the National Institute of Standards and Technology (NIST) or to intrinsic standards. The thermocouple type, temperature range calibrated over and the uncertainty of a confidence level of k=2 is as follows:

TC Type	Range	Uncertainty
K	70 °F to 1000 °F	± (4 °F or 0.75% of reading) (whichever is greater)

NOTES: The tolerance statement applies only to the thermocouple, and does not include any instrument used by the owner to measure it.
The results relate only to the items tested or calibrated.

Metrologist: A. Sanchez, 02541

Approved by: L.J. Azevedo, 02541
Manager

Copy to: Submitting organization
Department 02541 file

Date received: 01/14/05
Dates tested: 01/26/05

NVLAP®
Accredited by the National Voluntary Laboratory Accreditation Program for the scope of accreditation under Lab Code 105002

PRIMARY STANDARDS LABORATORY

Sandia National Laboratories, Albuquerque, New Mexico 87185-0665

CERTIFICATE

File No. 51566
LIMITED

THERMOCOUPLE	TYPE K - STD
Model No.	KQIN-116-144
Serial No.	31
Procedure No.	CP – TC (07/22/98)
Lab Conditions:	Temperature: 23 °C ± 2 °C Humidity: 40% ± 10%
Submitted by:	Organization 06113 SNL / NM
Certified:	January 26, 2005
Expires:	January 26, 2006

COPY

The thermocouple was calibrated over the temperature range of 71 °F to 1000 °F by comparison with a Standard Platinum Resistance Thermometer (SPRT). The thermocouple was calibrated in the 9122 Dry Well, with an immersion of 6 inches. The probe mV output was measured with an 8508A Fluke Multimeter. Both the SPRT and the Multimeter have calibrations that are traceable to the National Institute of Standards and Technology (NIST) or to intrinsic standards. The thermocouple type, temperature range calibrated over and the uncertainty of a confidence level of k=2 is as follows:

TC Type	Range	Uncertainty
K	70 °F to 1000 °F	± (4 °F or 0.75% of reading) (whichever is greater)

NOTES: The tolerance statement applies only to the thermocouple, and does not include any instrument used by the owner to measure it.
The results relate only to the items tested or calibrated.

Metrologist: A. Sanchez, 02541

Approved by: L.J. Azevedo, 02541
Manager

Copy to: Submitting organization
Department 02541 file

Date received: 01/14/05
Dates tested: 01/26/05

NVLAP®
Accredited by the National Voluntary Laboratory Accreditation Program for the scope of accreditation under Lab Code 105002

PRIMARY STANDARDS LABORATORY

Sandia National Laboratories, Albuquerque, New Mexico 87185-0665

CERTIFICATE

File No. 51567
LIMITED

THERMOCOUPLE	TYPE K - STD
Model No.	KQIN-116-144
Serial No.	32
Procedure No.	CP – TC (07/22/98)
Lab Conditions:	Temperature: 23 °C ± 2 °C Humidity: 40% ± 10%
Submitted by:	Organization 06113 SNL / NM
Certified:	January 26, 2005
Expires:	January 26, 2006

COPY

The thermocouple was calibrated over the temperature range of 71 °F to 1000 °F by comparison with a Standard Platinum Resistance Thermometer (SPRT). The thermocouple was calibrated in the 9122 Dry Well, with an immersion of 6 inches. The probe mV output was measured with an 8508A Fluke Multimeter. Both the SPRT and the Multimeter have calibrations that are traceable to the National Institute of Standards and Technology (NIST) or to intrinsic standards. The thermocouple type, temperature range calibrated over and the uncertainty of a confidence level of k=2 is as follows:

TC Type	Range	Uncertainty
K	70 °F to 1000 °F	± (4 °F or 0.75% of reading) (whichever is greater)

NOTES: The tolerance statement applies only to the thermocouple, and does not include any instrument used by the owner to measure it.
The results relate only to the items tested or calibrated.

Metrologist: A. Sanchez, 02541

Approved by: L.J. Azevedo, 02541
Manager

Copy to: Submitting organization
Department 02541 file

Date received: 01/14/05
Dates tested: 01/26/05

NVLAP®
Accredited by the National Voluntary Laboratory Accreditation Program for the scope of accreditation under Lab Code 105002

PRIMARY STANDARDS LABORATORY

Sandia National Laboratories, Albuquerque, New Mexico 87185-0665

CERTIFICATE

File No. 51568
LIMITED

THERMOCOUPLE	TYPE K - STD
Model No.	KQIN-116-144
Serial No.	33
Procedure No.	CP – TC (07/22/98)
Lab Conditions:	Temperature: 23 °C ± 2 °C Humidity: 40% ± 10%
Submitted by:	Organization 06113 SNL / NM
Certified:	January 26, 2005
Expires:	January 26, 2006

COPY

The thermocouple was calibrated over the temperature range of 71 °F to 1000 °F by comparison with a Standard Platinum Resistance Thermometer (SPRT). The thermocouple was calibrated in the 9122 Dry Well, with an immersion of 6 inches. The probe mV output was measured with an 8508A Fluke Multimeter. Both the SPRT and the Multimeter have calibrations that are traceable to the National Institute of Standards and Technology (NIST) or to intrinsic standards. The thermocouple type, temperature range calibrated over and the uncertainty of a confidence level of k=2 is as follows:

TC Type	Range	Uncertainty
K	70 °F to 1000 °F	± (4 °F or 0.75% of reading) (whichever is greater)

NOTES: The tolerance statement applies only to the thermocouple, and does not include any instrument used by the owner to measure it.
The results relate only to the items tested or calibrated.

Metrologist: A. Sanchez, 02541

Approved by: L.J. Azevedo, 02541
Manager

Copy to: Submitting organization
Department 02541 file

Date received: 01/14/05
Dates tested: 01/26/05

NVLAP®
Accredited by the National Voluntary Laboratory Accreditation Program for the scope of accreditation under Lab Code 105002

PRIMARY STANDARDS LABORATORY

Sandia National Laboratories, Albuquerque, New Mexico 87185-0665

CERTIFICATE

File No. 51569
LIMITED

THERMOCOUPLE	TYPE K - STD
Model No.	KQIN-116-144
Serial No.	34
Procedure No.	CP – TC (07/22/98)
Lab Conditions:	Temperature: 23 °C ± 2 °C Humidity: 40% ± 10%
Submitted by:	Organization 06113 SNL / NM
Certified:	January 26, 2005
Expires:	January 26, 2006

COPY

The thermocouple was calibrated over the temperature range of 71 °F to 1000 °F by comparison with a Standard Platinum Resistance Thermometer (SPRT). The thermocouple was calibrated in the 9122 Dry Well, with an immersion of 6 inches. The probe mV output was measured with an 8508A Fluke Multimeter. Both the SPRT and the Multimeter have calibrations that are traceable to the National Institute of Standards and Technology (NIST) or to intrinsic standards. The thermocouple type, temperature range calibrated over and the uncertainty of a confidence level of k=2 is as follows:

TC Type	Range	Uncertainty
K	70 °F to 1000 °F	± (4 °F or 0.75% of reading) (whichever is greater)

NOTES: The tolerance statement applies only to the thermocouple, and does not include any instrument used by the owner to measure it.
The results relate only to the items tested or calibrated.

Metrologist: A. Sanchez, 02541

Approved by: L.J. Azevedo, 02541
Manager

Copy to: Submitting organization
Department 02541 file

Date received: 01/14/05
Dates tested: 01/26/05

NVLAP®
Accredited by the National Voluntary Laboratory Accreditation Program for the scope of accreditation under Lab Code 105002

PRIMARY STANDARDS LABORATORY

Sandia National Laboratories, Albuquerque, New Mexico 87185-0665

CERTIFICATE

File No. 51570
LIMITED

THERMOCOUPLE	TYPE K - STD
Model No.	KQIN-116-144
Serial No.	35
Procedure No.	CP – TC (07/22/98)
Lab Conditions:	Temperature: 23 °C ± 2 °C Humidity: 40% ± 10%
Submitted by:	Organization 06113 SNL / NM
Certified:	January 26, 2005
Expires:	January 26, 2006

COPY

The thermocouple was calibrated over the temperature range of 71 °F to 1000 °F by comparison with a Standard Platinum Resistance Thermometer (SPRT). The thermocouple was calibrated in the 9122 Dry Well, with an immersion of 6 inches. The probe mV output was measured with an 8508A Fluke Multimeter. Both the SPRT and the Multimeter have calibrations that are traceable to the National Institute of Standards and Technology (NIST) or to intrinsic standards. The thermocouple type, temperature range calibrated over and the uncertainty of a confidence level of k=2 is as follows:

TC Type	Range	Uncertainty
K	70 °F to 1000 °F	± (4 °F or 0.75% of reading) (whichever is greater)

NOTES: The tolerance statement applies only to the thermocouple, and does not include any instrument used by the owner to measure it.
The results relate only to the items tested or calibrated.

Metrologist: A. Sanchez, 02541

Approved by: L.J. Azevedo, 02541
Manager

Copy to: Submitting organization
Department 02541 file

Date received: 01/14/05
Dates tested: 01/26/05

NVLAP®
Accredited by the National Voluntary Laboratory Accreditation Program
for the scope of accreditation under Lab Code 105002

PRIMARY STANDARDS LABORATORY

Sandia National Laboratories, Albuquerque, New Mexico 87185-0665

CERTIFICATE

File No. 51571
LIMITED

THERMOCOUPLE	TYPE K - STD
Model No.	KQIN-116-144
Serial No.	36
Procedure No.	CP – TC (07/22/98)
Lab Conditions:	Temperature: 23 °C ± 2 °C Humidity: 40% ± 10%
Submitted by:	Organization 06113 SNL / NM
Certified:	January 26, 2005
Expires:	January 26, 2006

COPY

The thermocouple was calibrated over the temperature range of 71 °F to 1000 °F by comparison with a Standard Platinum Resistance Thermometer (SPRT). The thermocouple was calibrated in the 9122 Dry Well, with an immersion of 6 inches. The probe mV output was measured with an 8508A Fluke Multimeter. Both the SPRT and the Multimeter have calibrations that are traceable to the National Institute of Standards and Technology (NIST) or to intrinsic standards. The thermocouple type, temperature range calibrated over and the uncertainty of a confidence level of k=2 is as follows:

TC Type	Range	Uncertainty
K	70 °F to 1000 °F	± (4 °F or 0.75% of reading) (whichever is greater)

NOTES: The tolerance statement applies only to the thermocouple, and does not include any instrument used by the owner to measure it.
The results relate only to the items tested or calibrated.

Metrologist: A. Sanchez, 02541

Approved by: L.J. Azevedo, 02541
Manager

Copy to: Submitting organization
Department 02541 file

Date received: 01/14/05
Dates tested: 01/26/05

NVLAP®
Accredited by the National Voluntary Laboratory Accreditation Program
for the scope of accreditation under Lab Code 105002

PRIMARY STANDARDS LABORATORY

Sandia National Laboratories, Albuquerque, New Mexico 87185-0665

CERTIFICATE

File No. 51572
LIMITED

THERMOCOUPLE	TYPE K - STD
Model No.	KQIN-116-144
Serial No.	37
Procedure No.	CP – TC (07/22/98)
Lab Conditions:	Temperature: 23 °C ± 2 °C Humidity: 40% ± 10%
Submitted by:	Organization 06113 SNL / NM
Certified:	January 26, 2005
Expires:	January 26, 2006

COPY

The thermocouple was calibrated over the temperature range of 71 °F to 1000 °F by comparison with a Standard Platinum Resistance Thermometer (SPRT). The thermocouple was calibrated in the 9122 Dry Well, with an immersion of 6 inches. The probe mV output was measured with an 8508A Fluke Multimeter. Both the SPRT and the Multimeter have calibrations that are traceable to the National Institute of Standards and Technology (NIST) or to intrinsic standards. The thermocouple type, temperature range calibrated over and the uncertainty of a confidence level of k=2 is as follows:

TC Type	Range	Uncertainty
K	70 °F to 1000 °F	± (4 °F or 0.75% of reading) (whichever is greater)

NOTES: The tolerance statement applies only to the thermocouple, and does not include any instrument used by the owner to measure it.
The results relate only to the items tested or calibrated.

Metrologist: A. Sanchez, 02541

Approved by: L.J. Azevedo, 02541
Manager

Copy to: Submitting organization
Department 02541 file

Date received: 01/14/05
Dates tested: 01/26/05

NVLAP®
Accredited by the National Voluntary Laboratory Accreditation Program
for the scope of accreditation under Lab Code 105002

PRIMARY STANDARDS LABORATORY

Sandia National Laboratories, Albuquerque, New Mexico 87185-0665

CERTIFICATE

File No. 51573
LIMITED

THERMOCOUPLE	TYPE K - STD
Model No.	KQIN-116-144
Serial No.	38
Procedure No.	CP – TC (07/22/98)
Lab Conditions:	Temperature: 23 °C ± 2 °C Humidity: 40% ± 10%
Submitted by:	Organization 06113 SNL / NM
Certified:	January 26, 2005
Expires:	January 26, 2006

COPY

The thermocouple was calibrated over the temperature range of 71 °F to 1000 °F by comparison with a Standard Platinum Resistance Thermometer (SPRT). The thermocouple was calibrated in the 9122 Dry Well, with an immersion of 6 inches. The probe mV output was measured with an 8508A Fluke Multimeter. Both the SPRT and the Multimeter have calibrations that are traceable to the National Institute of Standards and Technology (NIST) or to intrinsic standards. The thermocouple type, temperature range calibrated over and the uncertainty of a confidence level of k=2 is as follows:

TC Type	Range	Uncertainty
K	70 °F to 1000 °F	± (4 °F or 0.75% of reading) (whichever is greater)

NOTES: The tolerance statement applies only to the thermocouple, and does not include any instrument used by the owner to measure it.
The results relate only to the items tested or calibrated.

Metrologist: A. Sanchez, 02541

Approved by: L.J. Azevedo, 02541
Manager

Copy to: Submitting organization
Department 02541 file

Date received: 01/14/05
Dates tested: 01/26/05

NVLAP®
Accredited by the National Voluntary Laboratory Accreditation Program for the scope of accreditation under Lab Code 105002

PRIMARY STANDARDS LABORATORY

Sandia National Laboratories, Albuquerque, New Mexico 87185-0665

CERTIFICATE

File No. 51574
LIMITED

THERMOCOUPLE	TYPE K - STD
Model No.	KQIN-116-144
Serial No.	39
Procedure No.	CP – TC (07/22/98)
Lab Conditions:	Temperature: 23 °C ± 2 °C Humidity: 40% ± 10%
Submitted by:	Organization 06113 SNL / NM
Certified:	January 26, 2005
Expires:	January 26, 2006

COPY

The thermocouple was calibrated over the temperature range of 71 °F to 1000 °F by comparison with a Standard Platinum Resistance Thermometer (SPRT). The thermocouple was calibrated in the 9122 Dry Well, with an immersion of 6 inches. The probe mV output was measured with an 8508A Fluke Multimeter. Both the SPRT and the Multimeter have calibrations that are traceable to the National Institute of Standards and Technology (NIST) or to intrinsic standards. The thermocouple type, temperature range calibrated over and the uncertainty of a confidence level of k=2 is as follows:

TC Type	Range	Uncertainty
K	70 °F to 1000 °F	± (4 °F or 0.75% of reading) (whichever is greater)

NOTES: The tolerance statement applies only to the thermocouple, and does not include any instrument used by the owner to measure it.
The results relate only to the items tested or calibrated.

Metrologist: A. Sanchez, 02541

Approved by: L.J. Azevedo, 02541
Manager

Copy to: Submitting organization
Department 02541 file

Date received: 01/14/05
Dates tested: 01/26/05

NVLAP®
Accredited by the National Voluntary Laboratory Accreditation Program for the scope of accreditation under Lab Code 105002

PRIMARY STANDARDS LABORATORY

Sandia National Laboratories, Albuquerque, New Mexico 87185-0665

CERTIFICATE

File No. 51575
LIMITED

THERMOCOUPLE	TYPE K - STD
Model No.	KQIN-116-144
Serial No.	40
Procedure No.	CP – TC (07/22/98)
Lab Conditions:	Temperature: 23 °C ± 2 °C Humidity: 40% ± 10%
Submitted by:	Organization 06113 SNL / NM
Certified:	January 26, 2005
Expires:	January 26, 2006

COPY

The thermocouple was calibrated over the temperature range of 71 °F to 1000 °F by comparison with a Standard Platinum Resistance Thermometer (SPRT). The thermocouple was calibrated in the 9122 Dry Well, with an immersion of 6 inches. The probe mV output was measured with an 8508A Fluke Multimeter. Both the SPRT and the Multimeter have calibrations that are traceable to the National Institute of Standards and Technology (NIST) or to intrinsic standards. The thermocouple type, temperature range calibrated over and the uncertainty of a confidence level of k=2 is as follows:

TC Type	Range	Uncertainty
K	70 °F to 1000 °F	± (4 °F or 0.75% of reading) (whichever is greater)

NOTES: The tolerance statement applies only to the thermocouple, and does not include any instrument used by the owner to measure it.
The results relate only to the items tested or calibrated.

Metrologist: A. Sanchez, 02541

Approved by: L.J. Azevedo, 02541
Manager

Copy to: Submitting organization
Department 02541 file

Date received: 01/14/05
Dates tested: 01/26/05

NVLAP®
Accredited by the National Voluntary Laboratory Accreditation Program for the scope of accreditation under Lab Code 105002

PRIMARY STANDARDS LABORATORY

Sandia National Laboratories, Albuquerque, New Mexico 87185-0665

CERTIFICATE

File No. 51576
LIMITED

THERMOCOUPLE	TYPE K - STD
Model No.	KQIN-116-144
Serial No.	41
Procedure No.	CP – TC (07/22/98)
Lab Conditions:	Temperature: 23 °C ± 2 °C Humidity: 40% ± 10%
Submitted by:	Organization 06113 SNL / NM
Certified:	January 26, 2005
Expires:	January 26, 2006

COPY

The thermocouple was calibrated over the temperature range of 71 °F to 1000 °F by comparison with a Standard Platinum Resistance Thermometer (SPRT). The thermocouple was calibrated in the 9122 Dry Well, with an immersion of 6 inches. The probe mV output was measured with an 8508A Fluke Multimeter. Both the SPRT and the Multimeter have calibrations that are traceable to the National Institute of Standards and Technology (NIST) or to intrinsic standards. The thermocouple type, temperature range calibrated over and the uncertainty of a confidence level of k=2 is as follows:

TC Type	Range	Uncertainty
K	70 °F to 1000 °F	± (4 °F or 0.75% of reading) (whichever is greater)

NOTES: The tolerance statement applies only to the thermocouple, and does not include any instrument used by the owner to measure it.
The results relate only to the items tested or calibrated.

Metrologist: A. Sanchez, 02541

Approved by: L.J. Azevedo, 02541
Manager

Copy to: Submitting organization
Department 02541 file

Date received: 01/14/05
Dates tested: 01/26/05

NVLAP®
Accredited by the National Voluntary Laboratory Accreditation Program
for the scope of accreditation under Lab Code 105002

PRIMARY STANDARDS LABORATORY

Sandia National Laboratories, Albuquerque, New Mexico 87185-0665

CERTIFICATE

File No. 51577
LIMITED

THERMOCOUPLE	TYPE K - STD
Model No.	KQIN-116-144
Serial No.	42
Procedure No.	CP – TC (07/22/98)
Lab Conditions:	Temperature: 23 °C ± 2 °C Humidity: 40% ± 10%
Submitted by:	Organization 06113 SNL / NM
Certified:	January 26, 2005
Expires:	January 26, 2006

COPY

The thermocouple was calibrated over the temperature range of 71 °F to 1000 °F by comparison with a Standard Platinum Resistance Thermometer (SPRT). The thermocouple was calibrated in the 9122 Dry Well, with an immersion of 6 inches. The probe mV output was measured with an 8508A Fluke Multimeter. Both the SPRT and the Multimeter have calibrations that are traceable to the National Institute of Standards and Technology (NIST) or to intrinsic standards. The thermocouple type, temperature range calibrated over and the uncertainty of a confidence level of k=2 is as follows:

TC Type	Range	Uncertainty
K	70 °F to 1000 °F	± (4 °F or 0.75% of reading) (whichever is greater)

NOTES: The tolerance statement applies only to the thermocouple, and does not include any instrument used by the owner to measure it.
The results relate only to the items tested or calibrated.

Metrologist: A. Sanchez, 02541

Approved by: L.J. Azevedo, 02541
Manager

Copy to: Submitting organization
Department 02541 file

Date received: 01/14/05
Dates tested: 01/26/05

NVLAP®
Accredited by the National Voluntary Laboratory Accreditation Program for the scope of accreditation under Lab Code 105002

PRIMARY STANDARDS LABORATORY

Sandia National Laboratories, Albuquerque, New Mexico 87185-0665

CERTIFICATE

File No. 51578
LIMITED

THERMOCOUPLE	TYPE K - STD
Model No.	KQIN-116-144
Serial No.	43
Procedure No.	CP – TC (07/22/98)
Lab Conditions:	Temperature: 23 °C ± 2 °C Humidity: 40% ± 10%
Submitted by:	Organization 06113 SNL / NM
Certified:	January 26, 2005
Expires:	January 26, 2006

COPY

The thermocouple was calibrated over the temperature range of 71 °F to 1000 °F by comparison with a Standard Platinum Resistance Thermometer (SPRT). The thermocouple was calibrated in the 9122 Dry Well, with an immersion of 6 inches. The probe mV output was measured with an 8508A Fluke Multimeter. Both the SPRT and the Multimeter have calibrations that are traceable to the National Institute of Standards and Technology (NIST) or to intrinsic standards. The thermocouple type, temperature range calibrated over and the uncertainty of a confidence level of k=2 is as follows:

TC Type	Range	Uncertainty
K	70 °F to 1000 °F	± (4 °F or 0.75% of reading) (whichever is greater)

NOTES: The tolerance statement applies only to the thermocouple, and does not include any instrument used by the owner to measure it.
The results relate only to the items tested or calibrated.

Metrologist: A. Sanchez, 02541

Approved by: L.J. Azevedo, 02541
Manager

Copy to: Submitting organization
Department 02541 file

Date received: 01/14/05
Dates tested: 01/26/05

NVLAP®
Accredited by the National Voluntary Laboratory Accreditation Program for the scope of accreditation under Lab Code 105002

PRIMARY STANDARDS LABORATORY

Sandia National Laboratories, Albuquerque, New Mexico 87185-0665

CERTIFICATE

File No. 51579
LIMITED

THERMOCOUPLE	TYPE K - STD
Model No.	KQIN-116-144
Serial No.	44
Procedure No.	CP – TC (07/22/98)
Lab Conditions:	Temperature: 23 °C ± 2 °C Humidity: 40% ± 10%
Submitted by:	Organization 06113 SNL / NM
Certified:	January 26, 2005
Expires:	January 26, 2006

COPY

The thermocouple was calibrated over the temperature range of 71 °F to 1000 °F by comparison with a Standard Platinum Resistance Thermometer (SPRT). The thermocouple was calibrated in the 9122 Dry Well, with an immersion of 6 inches. The probe mV output was measured with an 8508A Fluke Multimeter. Both the SPRT and the Multimeter have calibrations that are traceable to the National Institute of Standards and Technology (NIST) or to intrinsic standards. The thermocouple type, temperature range calibrated over and the uncertainty of a confidence level of k=2 is as follows:

TC Type	Range	Uncertainty
K	70 °F to 1000 °F	± (4 °F or 0.75% of reading) (whichever is greater)

NOTES: The tolerance statement applies only to the thermocouple, and does not include any instrument used by the owner to measure it.
The results relate only to the items tested or calibrated.

Metrologist: A. Sanchez, 02541

Approved by: L.J. Azevedo, 02541
Manager

Copy to: Submitting organization
Department 02541 file

Date received: 01/14/05
Dates tested: 01/26/05

NVLAP®
Accredited by the National Voluntary Laboratory Accreditation Program
for the scope of accreditation under Lab Code 105002

PRIMARY STANDARDS LABORATORY

Sandia National Laboratories, Albuquerque, New Mexico 87185-0665

CERTIFICATE

File No. 51580
LIMITED

THERMOCOUPLE	TYPE K - STD
Model No.	KQIN-116-144
Serial No.	45
Procedure No.	CP – TC (07/22/98)
Lab Conditions:	Temperature: 23 °C ± 2 °C Humidity: 40% ± 10%
Submitted by:	Organization 06113 SNL / NM
Certified:	January 26, 2005
Expires:	January 26, 2006

COPY

The thermocouple was calibrated over the temperature range of 71 °F to 1000 °F by comparison with a Standard Platinum Resistance Thermometer (SPRT). The thermocouple was calibrated in the 9122 Dry Well, with an immersion of 6 inches. The probe mV output was measured with an 8508A Fluke Multimeter. Both the SPRT and the Multimeter have calibrations that are traceable to the National Institute of Standards and Technology (NIST) or to intrinsic standards. The thermocouple type, temperature range calibrated over and the uncertainty of a confidence level of k=2 is as follows:

TC Type	Range	Uncertainty
K	70 °F to 1000 °F	± (4 °F or 0.75% of reading) (whichever is greater)

NOTES: The tolerance statement applies only to the thermocouple, and does not include any instrument used by the owner to measure it.
The results relate only to the items tested or calibrated.

Metrologist: A. Sanchez, 02541

Approved by: L.J. Azevedo, 02541
Manager

Copy to: Submitting organization
Department 02541 file

Date received: 01/14/05
Dates tested: 01/26/05

NVLAP®
Accredited by the National Voluntary Laboratory Accreditation Program
for the scope of accreditation under Lab Code 105002

PRIMARY STANDARDS LABORATORY

Sandia National Laboratories, Albuquerque, New Mexico 87185-0665

CERTIFICATE

File No. 51581
LIMITED

THERMOCOUPLE	TYPE K - STD
Model No.	KQIN-116-144
Serial No.	46
Procedure No.	CP – TC (07/22/98)
Lab Conditions:	Temperature: 23 °C ± 2 °C Humidity: 40% ± 10%
Submitted by:	Organization 06113 SNL / NM
Certified:	January 26, 2005
Expires:	January 26, 2006

COPY

The thermocouple was calibrated over the temperature range of 71 °F to 1000 °F by comparison with a Standard Platinum Resistance Thermometer (SPRT). The thermocouple was calibrated in the 9122 Dry Well, with an immersion of 6 inches. The probe mV output was measured with an 8508A Fluke Multimeter. Both the SPRT and the Multimeter have calibrations that are traceable to the National Institute of Standards and Technology (NIST) or to intrinsic standards. The thermocouple type, temperature range calibrated over and the uncertainty of a confidence level of k=2 is as follows:

TC Type	Range	Uncertainty
K	70 °F to 1000 °F	± (4 °F or 0.75% of reading) (whichever is greater)

NOTES: The tolerance statement applies only to the thermocouple, and does not include any instrument used by the owner to measure it.
The results relate only to the items tested or calibrated.

Metrologist: A. Sanchez, 02541

Approved by: L.J. Azevedo, 02541
Manager

Copy to: Submitting organization
Department 02541 file

Date received: 01/14/05
Dates tested: 01/26/05

NVLAP®
Accredited by the National Voluntary Laboratory Accreditation Program for the scope of accreditation under Lab Code 105002

MEASUREMENTS STANDARDS PROGRAM
SANDIA NATIONAL LABORATORIES
Albuquerque, New Mexico

General Traceability Statement: Values and the associated uncertainties supplied by the Measurements Standards Program (MSP) are traceable to one or more of the following:

1. The values of the units (either base or derived) maintained and disseminated by the National Institute of Standards and Technology (United States of America) or, in special cases and where appropriate, to the National Standards Laboratory of another nation;
2. The accepted value(s) of fundamental physical phenomena (intrinsic standards);
3. Ratio(s) or other non-maintained standards established by either a self-calibration and/or a direct calibration technique;
4. Standards maintained and disseminated by the MSP in special cases and where warranted;
5. Values and uncertainties arising from participation in a National Measurement System.

Because of inherent complexity in the calibration process and the uncertainty contribution by both standards and calibrating instruments, traceability always requires evaluation of a "traceability tree." A "traceability tree" analysis can be assembled for a specific calibration and valid for a particular and specific point in time. The "traceability tree" will include copies of relevant certificates and reports, excerpted as appropriate for brevity. However, the cost of preparation of the "traceability tree" will be charged to the requester.

Note 1: This certificate or report shall not be reproduced except in full without the advance written approval of the Measurement Standards Program at Sandia National Laboratories.

Note 2: For National Voluntary Laboratory Accreditation Program (NVLAP) accredited capabilities, the MSP at Sandia National Laboratories is accredited by NVLAP for the specific scope of accreditation under Laboratory Code 105002. This certificate or report shall not be used by the customer to claim product endorsement by NVLAP or any agency of the U. S. Government.

Note 3: The as received condition of the standard, set of standards, or measurement equipment described herein was as expected, unless otherwise noted in the body of the certificate or report.

General.Doc
3/10/96, Revision 2

Appendix H

PHOTOGRAPHS

#1: Deck Construction

#2: Test items installed in deck.

#3: Typical TCs inside LB.

#4: TCs on LB.

#5: Wire bundle for 4" conduit.

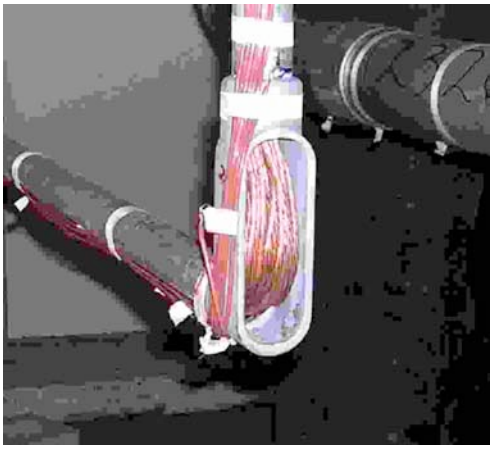

#6: Conduit with bare #8 inside.

#7: TCs on conduit.

#8: Loaded conduits.

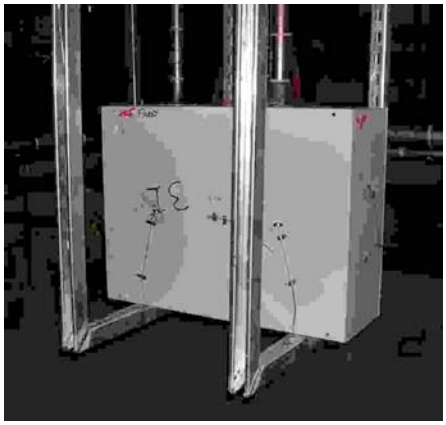

#9: Junction box.

#10: Wrapping the LB on 3A.

#11: Installing wrap on 3A elbow.

#12: Installing foil on 3A elbow.

#13: Installing ATH on 3A.

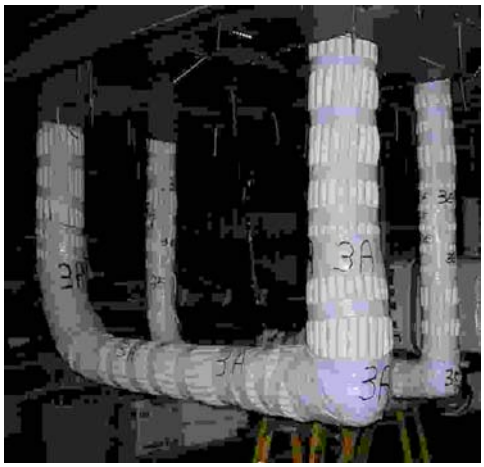

#14: Installation of ATH on 3A is complete.

#15: Installing outer wrap on 3A.

#16: Wiring outer wrap on 3A.

#17: Completing wrap on 3A.

#18: 3A complete.

#19: Stainless steel foil on 3B.

#20: Installing ATH on 3B.

#21: Installing outer wrap on 3B LB.

#22: Tie wires on 3B.

#23: Wrapping elbow on 3B.

#24: Patch on 3B.

#25: LB cover on conduit 3C.

#26: Wrapping 3C.

#27: Applying ATH tubes to 3C.

#28: Installing outer wrap on 3C.

#29: Installing inner insulation on 3D.

#30: ATH tubes being installed on 3D.

#31: Installing stainless steel foil on 3D.

#32: Installing outer wrap on 3D LB.

#33: Outer wrap on 3D LB.

#34: 3D complete.

#35: 3E inner wrap.

#36: 3E foil wrap.

#37: Installing ATH on 3E.

#38: Installing ATH on 3E.

#39: Outer wrap on 3E.

#40: Wiring outer wrap on 3E.

#41: Installing inner wrap on 3F.

#42: Installing foil on 3F.

#43: Installing outer wrap on 3F LB.

#44: Wire on inside bend of 3F LB.

#45: Outer wrap on 3F.

#46: Installing inner wrap on 3G.

#47: Outer wrap on 3G.

#48: Inner insulation on 3H.

#49: Outer wrap on 3H.

#50: Wrapping 90° bend on 3H.

#51: 3H complete.

#52: Wrapping supports on 3I junction box.

#53: Supports on 3I junction box.

#54: 3I inner insulation.

#55: Installing stainless steel foil on junction box.

#56: Installing ATH on junction box.

#57: Installing ATH on junction box.

#58: Taping ATH tubes on junction box.

#59: Installing outer wrap on JB.

#60: Installing support bands on JB.

#61: Junction box installed.

#62: 3J cable air drop bare.

#63: Inner insulation on cable air drop.

#64: Inner insulation on cable air drop.

#65: 2nd layer of insulation on air drop.

#66: Installing foil on cable air drop.

#67: Installing ATH tubes on air drop.

#68: Installing outer insulation on air drop.

#69: Outer insulation on cable air drop.

#70: Item 3A complete.

#71: 3A and 3E complete.

#72: 3B complete.

#73: 3C complete.

#74: 3D complete.

#75: 3F complete.

#76: 3G complete.

#77: 3G complete

#78: 3H complete.

#79: 3H complete.

#80: 3I (junction box) complete.

#81: 3J cable air drop complete.

#82: Completed test assembly.

#83: Completed test assembly.

#84: Lowering assembly onto furnace.

#85: Item 3B in furnace.

#86: Item 3I in furnace.

#87: Typical seal on cold side.

#88: Conduit seal on cold side.

#89: Loaded 2.5" conduit.

#90: Thermocouple connections to computer.

#91: Unexposed surface of assembly.

#92: Start of test.

#93: Test at one hour.

#94: Test at two hours.

#95: Removing assembly from furnace.

#96: Test assembly immediately after test.

#97: Typical gap between outer layer blankets.

#98: Gapes in most items.

#99: Item 3C with flaming gap.

#100: Item 3D.

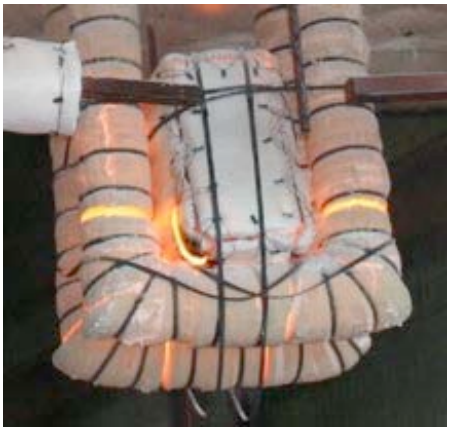

#101: Item 3I junction box.

#102: Items 3B and 3F (at rear).

#103: Items 3A and 3E (rear).

#104: Item 3H.

#105: Item 3G.

#106: Item 3J cable air drop.

#107: Setting water pressure and discharge angle.

#108: Hose stream test @ 15°, 75 psi from 10 feet.

#109: Hose stream test.

#110: Hose stream test.

#111: Immediately after hose stream test.

#112: Torn siltemp on 3D.

#113: Torn siltemp on 3B.

#114: Item 3A after hose stream test.

#115: Item 3B after hose stream test.

#116: Item 3C after hose stream test.

#117: Item 3C after hose stream test.

#118: Item 3D after hose stream test.

#119: Item 3E after hose stream test.

#120: Item F after hose stream test.

#121: Item 3G after hose stream test.

#122: Item 3H after hose stream test.

#123: Item 3I junction box after hose stream test.

#124: Item 3J after hose stream test.

#125: Item 3J after hose stream test.

#126: Gap in 3C to foil (typical).

#127: 3B opened to foil layer.

#128: 3B opened to foil layer.

#129: 3B opened to expose LB and conduit.

#130: 3B LB exposed.

#131: 3F opened to foil layer.

#132: 3E opened to conduit.

#133: 3E blackened inside LB.

#134: 3E TC wires are burned bare.

#135: ATH tubes blackened inside 3C.

#136: Conduit blackened inside 3C.

#137: Cable air drop blackened.