DM-46
W/PDR

SAFETY EVALUATION REPORT
RELATED TO THE TOPICAL REPORT FOR THE FOSTER WHEELER MODULAR VAULT DRY STORE (M.V.D.S.) FOR IRRADIATED NUCLEAR FUEL

U.S. Nuclear Regulatory Commission

Office of Nuclear Material Safety and Safeguards

March 1988

C/1

Project M-46

MAR 2 3 1988

FW Energy Applications, Inc.
ATTN: Mr. Henry C. Pickering, Jr.
President
8 Peach Hill Road
Livingston, New Jersey 07039

Gentlemen:

SUBJECT: LIMITED PROPRIETARY REVIEW OF NUCLEAR REGULATORY COMMISSION (NRC) STAFF'S FINAL SAFETY EVALUATION REPORT (SER) FOR THE FW ENERGY APPLICATIONS, INC., TOPICAL REPORT FOR THE FOSTER WHEELER MODULAR VAULT DRY STORE (M.V.D.S.) FOR IRRADIATED NUCLEAR FUEL, REVISION 1

Enclosed is the NRC staff's letter of approval for the FW Energy Applications, Inc., (FW) Topical Report for the Foster Wheeler Modular Vault Dry Store (M.V.D.S.) for Irradiated Nuclear Fuel, Revision 1, (enclosure 1).

The letter of approval contains, as an enclosure, the NRC staff's final SER for the FW topical report. Much information and data presented in the topical report are claimed to be proprietary in nature. Of necessity there must be specificity in the NRC staff's SER in delineating the extent and limitations of our safety review of the FW topical report, and information and data in the topical report claimed to be proprietary in nature are referenced in summary form in the staff's SER. Consequently, we are providing in this letter a summary of the conclusions of the NRC staff's SER (enclosure 2). This summary and the letter of approval without its enclosed SER are being made publicly available with this letter (docketed under Project M-46) through the NRC Public Document Room. For a limited time we make available to FW the NRC staff's final SER solely for a limited proprietary review by FW to determine if there exist objections to the release of portions of the SER because of potential public release of information and/or data of a commercially damaging nature.

If the NRC staff has not received a response from FW within three weeks of the date of this letter, we will publicly release the SER. Please note that no comments on the technical nature or conclusions of the staff's SER, which is final, are either solicited or acceptable in your response.

Sincerely,

Original Signed By:

John P. Roberts
Irradiated Fuel Section
Fuel Cycle Safety Branch

Enclosures:
1) Letter of Approval
2) Summary of NRC staff's Safety Review Conclusions

DISTRIBUTION:
Project M-46 FLBrown PDR NRC File Center NMSS R/F IMSB R/F GBennington, SGTB IMIF R/F EWBrach, SGTB JPRoberts SHO FSturz JSchneider GJackson JSpraul ECShomaker LCRouse

OFC :	IMIF:	OGC:
NAME:	JPRoberts:lg:	ECShomaker:
DATE:	3/23/88:	3/23/88:

OFFICIAL RECORD COPY

MAR 2 2 1988

Project M-46

FW Energy Applications, Inc.
ATTN: Mr. Henry C. Pickering, Jr.
President
8 Peach Hill Road
Livingston, New Jersey 07039

Gentlemen:

SUBJECT: ACCEPTANCE AS A REFERENCE OF "TOPICAL REPORT FOR THE FOSTER WHEELER MODULAR VAULT DRY STORE (M.V.D.S.) FOR IRRADIATED NUCLEAR FUEL"

The Nuclear Regulatory Commission (NRC) staff has completed its review of Revision 1 of the FW Energy Applications, Inc., "Topical Report for the Foster Wheeler Modular Vault Dry Store (M.V.D.S.) for Irradiated Nuclear Fuel" (TR). Based on this review, NRC staff has concluded that the Modular Vault Dry Store (MVDS) design as described in the TR provides for an acceptable means to meet the requirements of 10 CFR Part 72, as defined in this letter and subject to appropriate specifications expressed in the enclosure, the NRC staff's safety evaluation report (SER), for the safe receipt, handling, and storage of spent fuel at an independent spent fuel storage installation to be located at a nuclear power plant site. This acceptability is limited to conditions and the spent fuel detailed in the TR (i.e., Revision 1), augmented by information submitted after the filing of Revision 1 and in this letter with its enclosure.

By letter dated September 11, 1986, FW Energy Applications, Inc., (FW) submitted for review a topical report entitled, "Topical Report for the Foster Wheeler Modular Vault Dry Store (M.V.D.S.) for Irradiated Nuclear Fuel" (TR) dated August 1986, (docketed under Project No. M-46). In response to NRC staff comments, a revision to the original FW report was submitted by letter dated November 12, 1987, and docketed. This was Revision 1 entitled, "Topical Report for the Foster Wheeler Modular Vault Dry Store (M.V.D.S.) for Irradiated Nuclear Fuel," dated October 1987.

The MVDS design is relatively complex when compared to other modular, passive, dry spent fuel storage designs that the NRC staff has evaluated. The MVDS design is almost a design suitable for a separate-site, stand-alone, away-from-reactor independent spent fuel storage installation. However, it provides a diversity in dry spent fuel storage options available for at-reactor-site storage in that it may be appropriate for reactors without heavy load crane capacity, capable of handling 100-ton class dry spent fuel storage casks. Also, the design, because of its compactness, may be suitable for reactor sites where there is limited space or with other storage siting location concerns. Moreover, while the NRC staff does not accept the use of

air as a storage cover gas for the MVDS at this time, we do not reject the contention that continued research in this area may subsequently result in allowance of such use.

The NRC staff believes that it is in the public interest that a broad diversity of safe passive dry spent fuel storage designs exist to ensure that storage capacity shortfalls not arise, so that sufficient storage capacity can be available at all reactor sites prior to final disposition of spent fuel generated by reactor operations.

In this SER, the staff's review examined how the submitted FW MVDS design for an ISFSI meets specific requirements of 10 CFR Part 72 with respect to design, operation, and decommissioning. The staff's review addresses normal and off-normal operating conditions and accidents. Shielding, criticality, structural, thermal, and radiological aspects of the cask design and the vendor's quality assurance program have been reviewed for compliance with applicable requirements of Subparts E, F, and G of 10 CFR Part 72.

Requirements for physical protection in 10 CFR Part 73 and for offsite transport of radioactive materials in 10 CFR Part 71 were not within the scope of the TSAR and were not addressed in the staff's review.

Operating limits established for the vault and its spent fuel content have been reviewed, and limitations and operating conditions applicable to fuel loading, storage operations, and surveillance are detailed in Chapter 12 of the SER (see enclosure). These specify the limitations under which the TR, with its described design and spent fuel, is accepted as a reference in a Safety Analysis Report in a 10 CFR Part 72 site-specific spent fuel storage license application. However, this listing is not complete; other appropriate technical specifications and limitations will apply, depending on siting or other conditions associated with a specific license application.

As a result of its evaluation, the NRC staff finds that the FW Energy Applications, Inc., "Topical Report for the Foster Wheeler Modular Vault Dry Store (M.V.D.S.) for Irradiated Nuclear Fuel" Revision 1, as augmented by additional information received and docketed after submittal of Revision 1, is acceptable as a reference, under the limitations delineated in the TR, as modified and expanded in the SER (enclosure), with the following exception:

> Chapter 10, Development and Operating Controls and Limits, of the TR is not to be cited as a reference. A site-specific license application should explicitly list its proposed technical specifications. This does not preclude a license applicant's use of Chapter 10 of the TR as guidance along with Chapter 12 of the NRC staff's SER (enclosure).

It is requested that FW Energy Applications, Inc., publish an approved version of this report, with proprietary information in a separate binder, as per Item 3, "Proprietary Information," of the Introduction of Regulatory Guide 3.48, within three (3) months of the receipt of this letter and submit 5 copies for docketing with 20 copies to be retained by FW for future reference.

This revision is also to incorporate this letter with its enclosures including the SER, following the title page and a listing identifying with submittal dates, supporting supplemental information submitted after the TR, i.e., Revision 1, and docketed under Project M-46. The report identification of the approved report is to have an "A" suffix.

The NRC staff does not intend to repeat the review of the features important to safety described in the TR and found acceptable when it appears as a reference in a license application except to assure that the material presented is applicable to the application involved. The NRC staff's acceptance applies only to the features described in the TR, as augmented by the supplemental information submitted subsequent to the filing of the TR (i.e., Revision 1).

Should NRC criteria or regulations change, such that our conclusions as to the acceptability of the report are invalidated, FW Energy Applications, Inc., and/or the applicants referencing the Topical Report will be expected to revise and resubmit their respective documentation, or submit justification for the continued effective applicability of the Topical Report without revision of their respective documentation.

Sincerely,

Original Signed By:

John P. Roberts, Section Leader
Irradiated Fuel Section
Fuel Cycle Safety Branch
Division of Industrial and
Medical Nuclear Safety

Enclosure:
Safety Evaluation Report

DISTRIBUTION: w/o enclosure (subject to limited proprietary review)

Project M-46	FBrown
PDR	NRC File Center
NMSS R/F	IMSB R/F
GBennington, SGTB	IMIF R/F
EWBrach, SGLB	JPRoberts
SHO	FSturz
JSchneider	GJackson
JSpraul	LCRouse

OFC: IMIF	:	:		
NAME:JPRoberts:lg:	:	:		
DATE:3/22/88	:	:	:	

OFFICIAL RECORD COPY

TABLE OF CONTENTS

TABLE OF CONTENTS (Continued)

TABLE OF CONTENTS (Continued)

TABLE OF CONTENTS (Continued)

TABLE OF CONTENTS (Continued)

TABLE OF CONTENTS (Continued)

TABLE OF CONTENTS (Continued)

LIST OF ABBREVIATIONS

ACI	American Concrete Institute
AISC	American Institute of Steel Construction
ASME	American Society of Mechanical Engineers
ANSI	American National Standards Institute
ASTM	American Society for Testing Materials
BWR	Boiling Water Reactor
CF	Charge Face
CFS	Charge Face Structure
DADS	Design-A-Dry Store
DBT	Design Basis Tornado
FEM	Finite Element Method
FHM	Fuel Handling Machine
FHMC	FHM Top Running Bridge Crane
GSS	Gas Services System
Hz	Herz
IFA	Irradiated Fuel Assembly
LUP	Load/Unload Port
MVDS	Modular Vault Dry Store
PWR	Pressurized Water Reactor
SP	Service Point
SPV	Services Point Valve
SSE	Safe Shutdown Earthquake
SST	Shielded Storage Tube
TC	Transfer Cask
TCPA	TC Preparation Area
TCRA	TC Reception Area
TCRB	TC Reception Bay
VM	Vault Module
FW	Foster Wheeler
ISFSI	Independent Spent Fuel Storage Installation
NFPA	National Fire Protection Association
NOG-1	Code for Overhead and Girder Cranes
HEPA	High Efficiency Particulate
NLI	National Lead Industries

1.0 GENERAL DESCRIPTION

1.1 INTRODUCTION

This Safety Evaluation Report (SER) documents the NRC staff's review of the Topical Report (TR) for the Foster Wheeler Modular Vault Dry Store (MVDS) for Irradiated Nuclear Fuel, EA 86/20, Revision 1, 1987 (Ref.1). The TR was prepared by FW Energy Applications, Inc. using the format suggested by NRC Regulatory Guide 3.48 (Ref. 2).

1.1.1 Scope

The review has been based on the proposed system's meeting the applicable requirements of 10 CFR 72, Subpart E, "Siting Evaluation Factors," Subpart F, "General Design Criteria," and Subpart G, "Quality Assurance" (Ref.3). The review also includes consideration of the appropriate parts of 10 CFR 20 for radiation protection during onsite handling, movement, and storage of spent fuel.

This review does not address either the requirements for physical protection under Subpart H, "Physical Protection," of 10 CFR 72 or those under applicable parts of 10 CFR 73, "Physical Protection of Plants and Materials". Further requirements for off-site transport of spent fuel under 10 CFR 71 are not addressed here since the review is limited only to on-site transfer of spent fuel at a reactor site.

This review does not address final approval for installation of a MVDS at any specific location. The scope of the TR excludes descriptions, final designs, procedures, and site characteristics which would be specific to a site. The review addresses those MVDS characteristics which are described by FW as being common to the MVDS regardless of site characteristics, and for which approval is sought.

The report specifically identifies those portions of the submittal descriptions and designs which are recommended for approval as satisfactory for inclusion by reference in future site specific applications for a

license to construct and operate an MVDS Independent Spent Fuel Storage Installation (ISFSI).

The recommendations for approval of MVDS ISFSI design elements are limited to the level to which the FW MVDS is defined. The drawings and descriptions of the MVDS in the TR do not constitute final construction or fabrication drawings and specifications. However, except as otherwise indicated in the recommendations, the level of design and supporting rationale and analyses presented are adequate to permit the development of such designs and specifications following standard codes and practice.

The SER includes descriptions of the different functional elements of the FW MVDS; general design criteria; and evaluations of the designs, proposed operating procedures, proposed acceptance tests and maintenance program, radiological protection, decommissioning discussion, proposed operating controls and limits, and proposed quality assurance. In general, the SER has been prepared for use together with the FW TR. Figures, tables, and text of the TR are not repeated in the SER but are referenced, except where such repetition is considered essential for clarity of the SER.

The descriptions of the FW MVDS included in the remainder of Section 1 are for general orientation of the reviewer. The descriptions are believed to be accurate representations, but they did not form the basis for the detailed evaluations. The evaluation recommendations are based directly on the text of the FW TR.

1.1.2 Description of the FW TR

The FW TR presents a conceptual design for an MVDS ISFSI and rationale and design analyses supporting that design. The TR includes detailed definitions of some elements of the design, especially as related to nuclear material handling and storage. The TR does not include final construction drawings and specifications for the structure or drawings suited to machinery or other shop fabrication of components. The drawings, design analyses, and descriptions included do, however, provide sufficient definition to permit preparation of final drawings and specifications following detailing and designing practices of the referenced codes and guides.

1.2 GENERAL DESCRIPTION OF MODULAR VAULT DRY STORE SYSTEM

The FW MVDS system is an independent spent fuel storage installation (ISFSI) which provides for the interim storage of irradiated fuel assemblies (IFAs) from light water reactors (LWRs). Each IFA is housed in a vertical shielded storage tube (SST). A matrix of SSTs is housed within a concrete vault module (VM) that provides biological shielding and protection from environmental conditions. Decay heat from the IFAs is removed passively by a thermosyphon effect. IFAs are transported to the MVDS from an on-site reactor pool using a transfer cask. The transfer cask (TC) is received in the transfer cask reception bay (TCRB) where it is unloaded from the transportation vehicle to a transfer cask trolley via an overhead crane. The transfer cask trolley is then positioned underneath a load/unload port (LUP) where a specially designed shielded fuel handling machine (FHM) removes the IFA from the TC and transports and inserts it into an SST.

In addition to these primary components, the MVDS system requires specific pieces of transfer equipment to move the IFAs from the reactor spent fuel pool to the FHM for subsequent loading into the SSTs. This site-specific equipment consists of the transfer cask and a transportation vehicle. Figures 1.2-1 and 1.2-2 show schematically the major components and operations of the FW MVDS system.

Although the size of the storage facility depends on the quantity of fuel to be stored, the TR deals with a minimum MVDS unit of two vault modules and the associated SSTs, TCRB, charge hall and FHM. Each of the two vault modules can hold 83 SSTs for PWR fuel or 150 SSTs for BWR fuel. An additional unit of construction consisting of three vault modules and a charge hall extension is also covered in the TR. Thus the maximum number of VMs covered by the TR is five.

The design of the MVDS, FHM, SSTs, and transfer cask trolley, as well as the types of fuel assemblies to be stored are described in more detail in the following subsections.

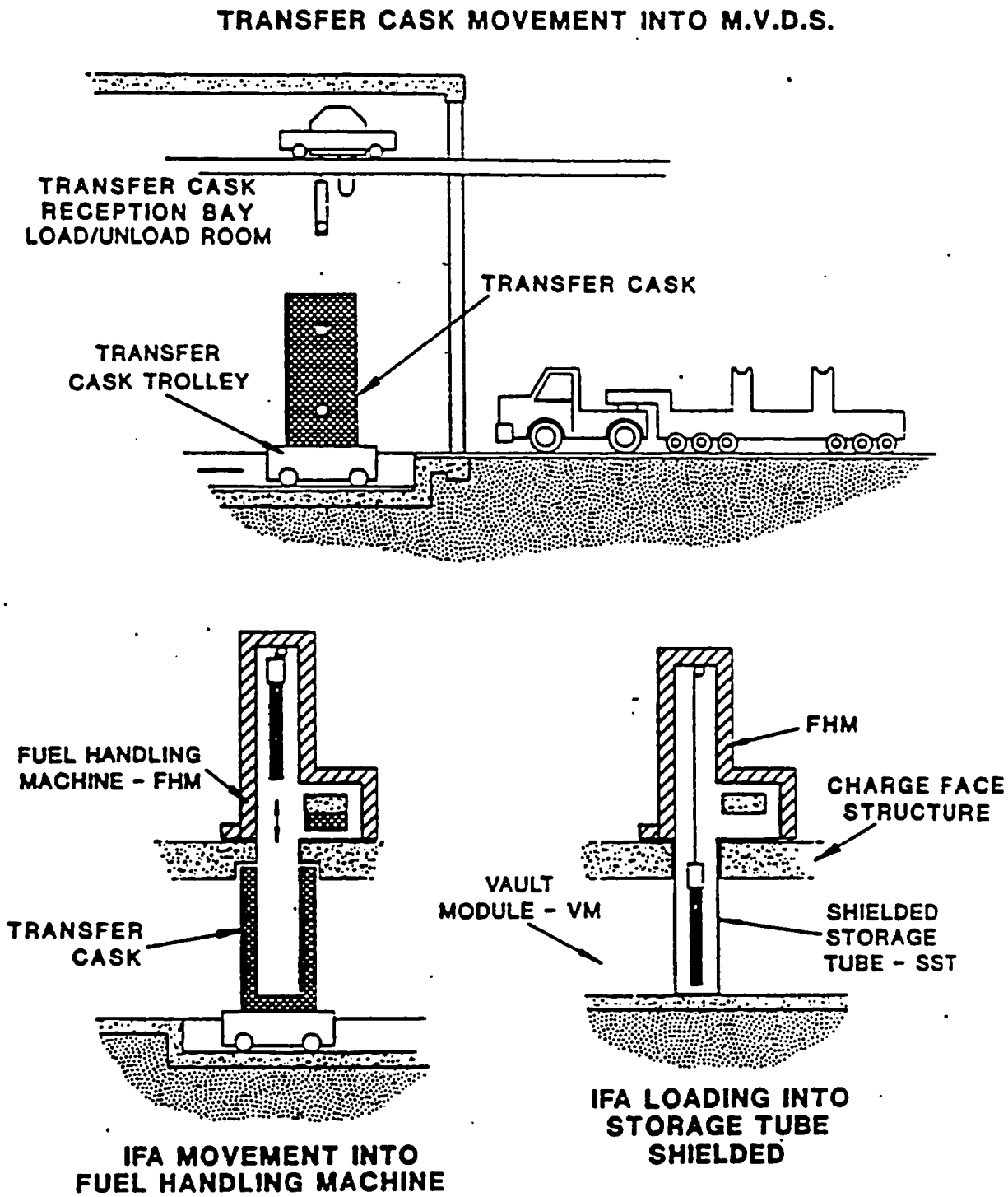

Figure 1.2-2 MVDS Basic Sequence of Operations

1.2.1 Civil Structure

The FW MVDS design for irradiated nuclear fuel is principally a massively built reinforced concrete structure with a steel-framed and sheathed enclosure, housing mechanical, handling, and storage systems. The MVDS system is intended to satisfy NRC requirements for an ISFSI. The FW system is designed to be modular, with a basic unit containing fuel handling, mechanical, and administrative areas; and an indefinite number of add-on modules providing additional storage capacity.

The civil structure provides for the structural support of SSTs, the FHM, massive radiation shielding, barriers to missiles resulting from design basis tornadoes (DBT), the air flow path necessary for cooling the SSTs, and support of the enclosure. The air cooling system includes radiation shielded air flow passages, radiation collimating baffles, exhaust air stack, and a stack cap to preclude missile or precipitation entry. The sides and the roof on the enclosure to the structure above a reinforced concrete barrier wall are supported by a steel frame structure holding sheet metal sheathing. This structure is essentially a determinate steel truss and column system with lateral resistance principally provided by the reinforced concrete stack structure which occupies part of one wall.

There are site dependent aspects of the MVDS system. These may limit the number of extension modules which may be added to the basic unit. There are alternative designs to provide for variation in the SST array to accommodate the specific fuel rods used at a plant and for alternative foundations to allow for different soil conditions. The structure as submitted for approval does not include a specific foundation design.

1.2.2 Shielded Storage Tubes and Closure Plugs

The SST is sized to hold either one PWR IFA or one BWR IFA depending on the site specific application. The SST together with a shield closure plug and a gas service system constitute the primary confinement barrier of the MVDS design. During the initial storage period, the IFAs are stored in the SSTs in a nitrogen gas environment at a pressure of 1.25 psig. The bounding dimensions for a PWR SST are: nominal outside diameter of 13 inches, overall length of 233.5 inches and a wall thickness of 0.188 inches. For a

BWR SST the bounding dimensions are: nominal outer diameter of 9 inches, length of 231.4 inches and a wall thickness of 0.188 inches.

The SST is a welded assembly consisting of a machined top ring, a tubular body section and a machined base. These parts are fabricated from low carbon steel which is protected from corrosion by an aluminum spray coating.

The closure shield plug has two elastomer O-ring seals which provide a means for allowing the nitrogen cover gas to enter the SST and for confining the radioactive gaseous or particulate matter. The plug, also made of low carbon steel, is raised and lowered via a chain hoist in the FHM. The dead weight of the plug secures it in the SST, i.e., there is no other securing mechanism.

The base of the SST is located and supported by a carbon steel support stool which is bolted to the vault floor. The stools have drain holes to prevent water accumulation and are sprayed with aluminum to protect them from corrosion.

1.2.3 Fuel Handling Machine

The FHM together with a bridge and trolley comprise the loading and unloading system for the irradiated fuel assemblies. A similar system has been in use in the United Kingdom for many years. Figures 1.2.3-1 and 1.2.3-2 show some of the details of the design. The FHM has four cavities to accommodate an FHM navigation system, the IFA, the SST shield plug, and a nose unit sleeve which is used as a transition piece between the SST and the FHM. The latter three cavities are equipped with separate chain hoists and grab head units to insert or extract the IFA, shield plug or nose unit sleeve. The upper portion of the FHM is mounted on a ball bearing race so that it can be rotated by means of a pinion gear driving a large ring gear. Thus the appropriate cavity of the FHM may be positioned above the SST or the LUP of the transfer cask. The FHM is supported on a trolley which runs on rails supported by the FHM bridge. The bridge spans the width of the charge hall and runs on rails the length of the charge hall. The rails are supported by the civil structure on each side of the charge hall. These two

sets of rails are oriented orthogonally to each other so that the FHM has access to all SST positions in the charge hall and the LUP in the TCRB.

Details of the FHM and bridge and trolley will be determined by the site specific PWR or BWR IFAs, and the number of vault modules desired by the utility.

1.2.4 Transfer Cask Reception Bay Equipment

The TCRB is located at one end of the MVDS and functions as the receipt and dispatch facility for the TC. The TCRB is basically comprised of a TC Reception Area (TCRA), a TC Preparation Area (TCPA), environmentally controlled rooms to house the gas services, electrical, and ventilation system equipment, limited maintenance provisions and a health physics control station. The basic TCRB equipment includes a TC handling crane, a TC trolley and a load/unload port (LUP).

The TC is delivered to the TCRA by a truck and trailer. The cask handling crane removes the TC from the trailer and loads it on the TC trolley. The trolley transfers the TC in a vertical position to the TCPA where it is positioned at the preparation station. The TC is prepared for unloading and is then transferred by the trolley to the LUP where IFAs are transferred from the TC into the FHM in the charge hall. The TC trolley and TC handling crane return the empty TC to the trailer for subsequent dispatch from the MVDS.

The cask handling crane is an electrically-driven, 25-ton overhead crane, trolley mounted on rails in the TCRB. The crane hoist is designed to NOG-1 Type I standards (Ref. 4) with single failure proof features. In addition to handling the TC, the crane is also used to handle other equipment, i.e., maintenance equipment and spares.

The TC trolley is a rail-mounted structure which transports the TC in a vertical position. The trolley is electrically driven between the TCRA and the TCPA on rails mounted in a pit. The trolley is equipped with clamps to secure the cask during travel and IFA unloading operations. The cask clamps and specialized rail clamps prevent the trolley and cask from overturning

during a seismic event. The trolley is also used to transport maintenance equipment and spares.

The LUP is located in the roof of the TCPA and provides an environmentally-controlled interconnection between the trolley-mounted TC in the TCPA and the FHM in the charge hall.

The primary component of the LUP is a vertically moving plug operated by electro-mechanical jack screws. The plug provides features to interface and seal to the TC while the FHM interfaces and seals to the top of the plug. A bore is provided in the plug to allow removal of the TC inner closure by the FHM and withdrawal of the IFA from the TC into the FHM enclosure using the FHM grapple. The shielding and sealing features of the plug minimize radioactive streaming during IFA transfer operations and prevent the potential release of particulate contamination. When the TC and FHM are not positioned at the LUP, small plugs are placed in the LUP transfer bore to isolate the charge hall and TCPA atmospheres.

1.2.5 Handling of the Transfer Cask and Cask Lid Modification

The IFAs are transported to the MVDS from the on-site reactor pool using a TC and a truck and trailer transporter. The TC and transporter are received in the TCRB where the TC is removed from the transporter and prepared for IFA unloading.

The equipment for handling the TC at the reactor pool (i.e., IFA loading, trailer loading, etc.) and the truck and trailer transporter will be site specific and were not addressed by the FW TR.

A range of "dry" transfer casks can be accommodated by the civil structure of the TCRB. The NLI 1/2 cask has been selected by FW to illustrate the type of modification that will be required to the cask inner closure. The cask inner closure is modified to incorporate a removable plug which can be engaged and removed using the FHM and the LUP. These modifications are illustrated in Figures 1.2.5-1 and 1.2.5-2.

The modified closure is secured in the cask by the same number and similar size bolts as the original closure. For the PWR configuration

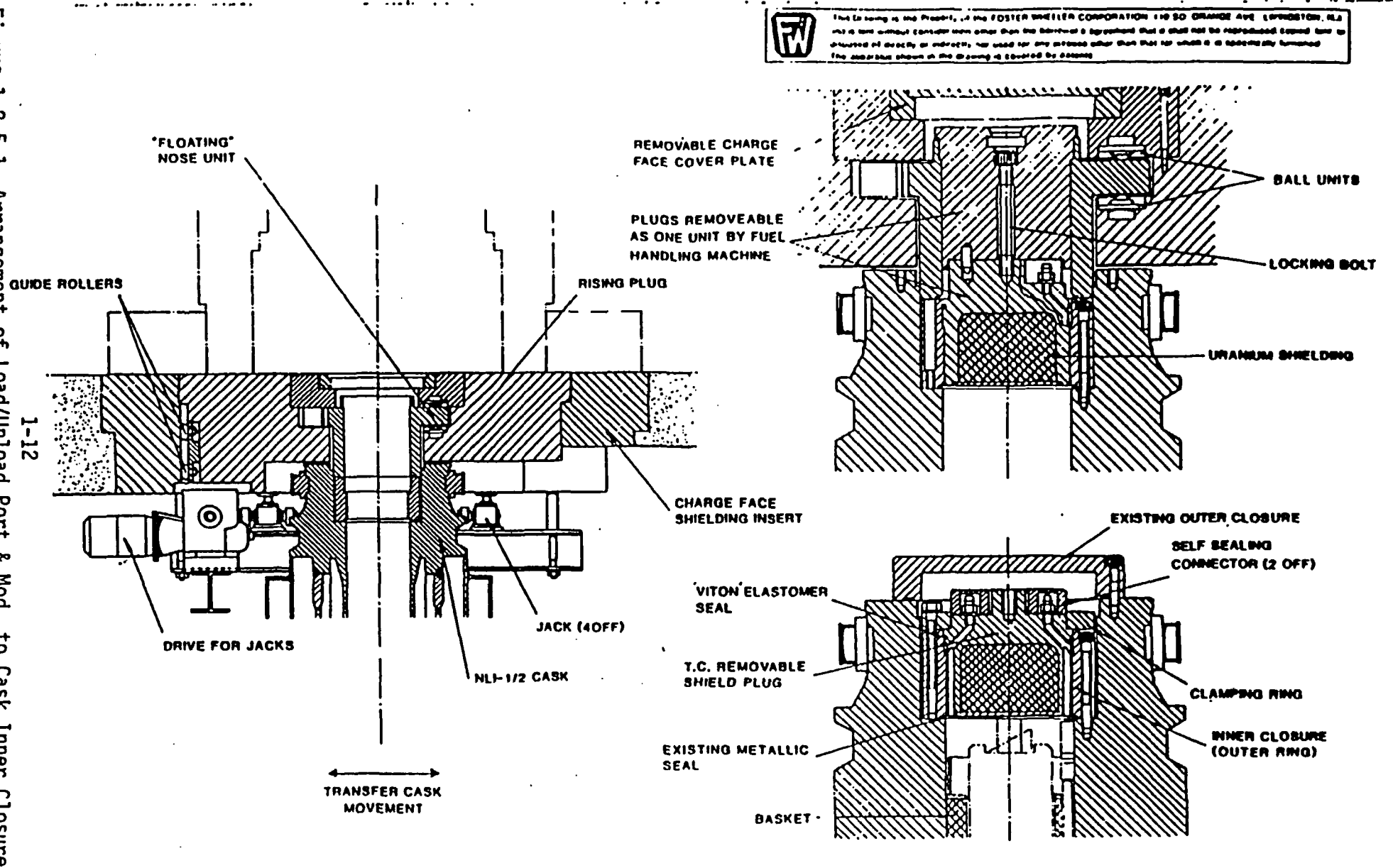

Figure 1.2.5-1 Arrangement of Load/Unload Port & Mod. to Cask Inner Closure

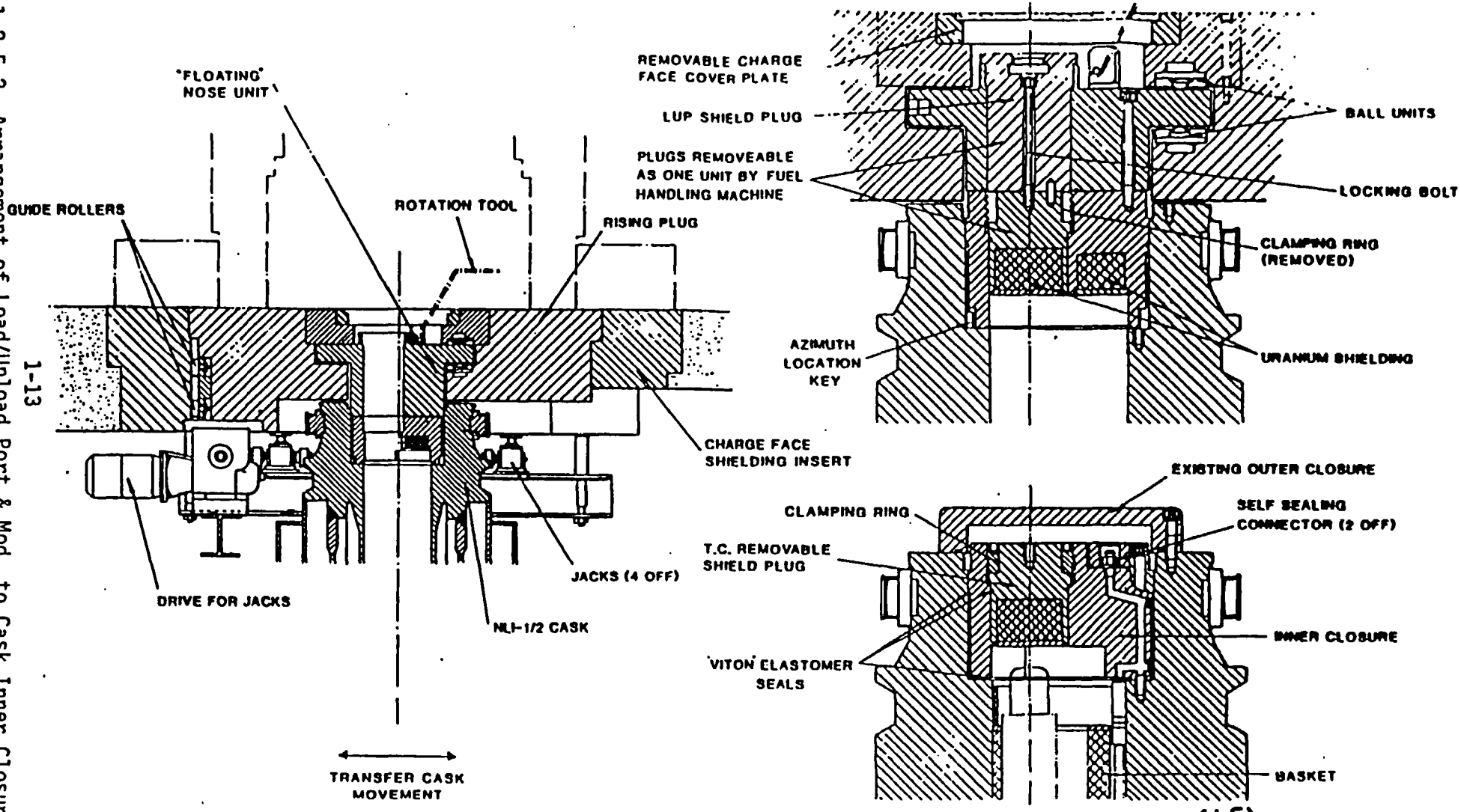

(1.5)

FIGURE 1.3.5-2 ARRANGEMENT OF LOAD/UNLOAD PORT & MOD. TO CASK INNER CLOSURE (BWR)

Figure 1.2.5-2 Arrangement of Load/Unload Port & Mod. to Cask Inner Closure (BWR)

(Figure 1.2.5-1), the removable plug is centrally located in the closure for access to a single PWR IFA. For the BWR configuration (Figure 1.2.5-2), the modified closure provides a rotation feature which allows the removable plug to be positioned over each of two BWR IFAs. The modified plugs are designed to have the same shielding and mechanical/structural integrity as the original closure. The length of the cask fuel basket cavity is also modified to provide a minimum clearance between the IFAs and the bottom of the cask closure. Only the cask closure modifications were addressed by the TR. The balance of the cask configuration remains site specific.

1.2.6 Gas Services System

The Gas Services System supplies, controls and maintains the cover gas environment within the SSTs to prevent degradation and gross rupture of the IFAs stored in the SSTs. There are two modes of operation identified in the FW TR; an "air mode" and a "nitrogen mode". The NRC staff currently has not accepted air as a cover gas environment, as detailed in the Appendix of this report. Therefore, the following discussion will address only the nitrogen cover gas system and those items which are identified as air system components but would be required for a nitrogen-only system.

The nitrogen system provides the means of storing IFAs within the SSTs in a non-oxidizing environment. Figure 1.2.6-1 illustrates both the nitrogen and the air system. In considering only a nitrogen system, the air system dryer unit, dryer isolation valve and the air flowmeter would be deleted. The balance of the air system components would become part of the nitrogen system.

Nitrogen gas is supplied to the SSTs from a bank of compressed gas cylinders via a fixed piping system and a series of valves. The nitrogen is supplied to the SSTs at a nominal 1.25 psig, and the system maximum pressure is limited by a 3.25 psig relief valve. All nitrogen vented from the relief system passes to a ventilation stack via HEPA filters. Flowmeters are provided in the nitrogen system to indicate total integrated flow and excessive flow in the event of a system leak. The exhauster shown in Figure 1.2.6-1 may remain in the nitrogen system as a backup depression system in the event of a FHM depression system malfunction during IFA transfer operations.

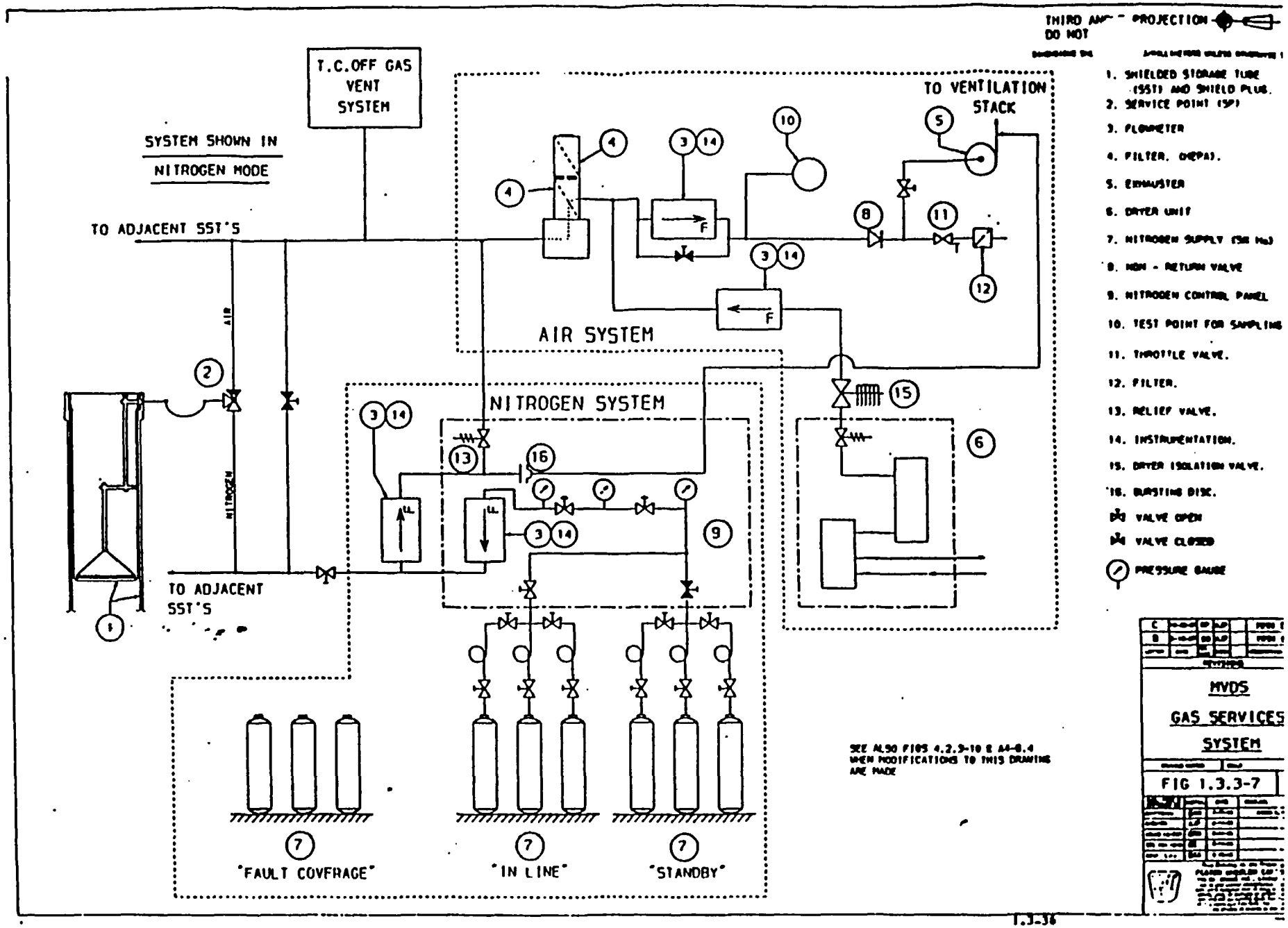
THIRD ANGLE PROJECTION
DO NOT
T.C.OFF GAS VENT SYSTEM
SYSTEM SHOWN IN NITROGEN MODE
TO ADJACENT SST'S
AIR
NITROGEN
TO ADJACENT SST'S
TO VENTILATION STACK
AIR SYSTEM
NITROGEN SYSTEM
"FAULT COVERAGE"
"IN LINE"
"STANDBY"
1. SHIELDED STORAGE TUBE (SST) AND SHIELD PLUG.
2. SERVICE POINT (SP)
3. FLOWMETER
4. FILTER. (HEPA).
5. EXHAUSTER
6. DRYER UNIT
7. NITROGEN SUPPLY (50 No)
8. NON - RETURN VALVE
9. NITROGEN CONTROL PANEL
10. TEST POINT FOR SAMPLING
11. THROTTLE VALVE.
12. FILTER.
13. RELIEF VALVE.
14. INSTRUMENTATION.
15. DRYER ISOLATION VALVE.
16. BURSTING DISC.
VALVE OPEN
VALVE CLOSED
PRESSURE GAUGE
SEE ALSO FIGS 4.2.5-10 & A4-8.4 WHEN MODIFICATIONS TO THIS DRAWING ARE MADE
MVDS
GAS SERVICES SYSTEM
FIG 1.3.3-7
1.3-36

Figure 1.2.6-1

1.2.7 Ventilation and Off-Gas Systems

The MVDS is designed to prevent significant contamination of the MVDS areas as the IFAs are transferred from the TC to the SSTs. Ventilation systems are provided in the MVDS to achieve alarm conditions and to provide additional protection to the operators and the general public.

The sub-charge face ventilation system provides ventilation of the sub-charge face volume and the charge hall. The TCRB ventilation system provides ventilation to the TCRB volumes i.e., the TCRA, the TCPA, the fan room, the electrical plant room, the health physics control station, the filter room, and the nitrogen bottle store. The basic functions of these ventilation systems are: (1) to provide positive pressure gradients and an air flow pattern from clean areas to areas of potential contamination; (2) to provide ventilation for areas intermittently occupied by operators; (3) to provide basic heating for maintenance of minimum occupancy temperatures in working areas and to prevent icing of equipment and filters; and (4) to protect the environment by filtering potentially contaminated MVDS exhaust air through HEPA filters.

Outside air is filtered and heated prior to feeding the clean work areas. Exhausted air is filtered through HEPA filters prior to release to the environment.

The Transfer Cask Off-Gas System is provided to allow reduction of the TC internal pressure to atmosphere prior to removal of an IFA in the TCRB.

1.3 IDENTIFICATION OF AGENTS AND SUBCONTRACTORS

The TR identifies FW Energy Applications, Inc. (FW), located at 110 South Orange Avenue, Livingston, New Jersey, as the prime contractor for the design and analysis of the MVDS system. As prime contractor, FW will seek qualified firms for the fabrication and construction on a site specific basis.

1.4 GENERIC MVDS CONFIGURATION

The TR is based on a minimum configuration of two vault modules with the associated SSTs, TCRB, charge hall and FHM. Although FW has stated that additional vault modules could be added to the generic design or could be added to an existing MVDS, such a configuration was not presented for review and approval.

REFERENCES

1. Foster Wheeler Energy Applications Inc., "Topical Report for the Foster Wheeler Modular Vault Dry Store for Irradiated Nuclear Fuel," EA 86/20 Revision 1, October, 1987.

2. U.S. Nuclear Regulatory Commission, "Standard format and Content for the Safety Analysis Report for an Independent Spent Fuel Storage Installation (Dry Storage)," Regulatory Guide 3.48 (1981).

3. U.S. Government, "Licensing Requirements for the Storage of Spent Fuel in an Independent Spent Fuel Storage Installation," Title 10 Code of Federal Regulations, Part 72, Office of the Federal Register, Washington, D.C., (1986).

4. ANSI/ASME NOG-1, 1983, "Rules for Construction of Overhead and Gantry Cranes (Top Running Bridge, Multiple Girder)."

2.0 PRINCIPAL DESIGN CRITERIA

2.1 INTRODUCTION

Subpart F of 10 CFR 72 establishes general design criteria for the design, fabrication, construction, testing and performance requirements for structures, systems and components important to safety in an ISFSI. Section 72.3, Paragraph (w) of 10 CFR 72 provides a definition for the important-to-safety concept as it relates to structures, systems and components of an ISFSI. (Ref. 1, p. 759) This chapter presents a discussion of the applicability of these criteria to the Foster Wheeler MVDS design and the degree to which the FW TR is in compliance with these criteria. The section headings which follow are taken from paragraph headings in 10 CFR 72.72 and encompass all of the principal design criteria presented by the FW TR. The results of the review, in the form of recommendations relative to acceptability of the criteria used by FW, are included in the criteria tables of this SER.

The FW ISFSI TR (Ref. 2) states in paragraph 1.2.2 that "the typical principle (sic) design criteria and parameters on which this TR is based are shown in Tables 1.2.2-1 through 1.2.2-4." Table 1.2.2-1 of the TR identifies 10 CFR 72 and ANSI/ANS 57.9-1984 (Ref. 3). It is recommended that FW use of these references as constituting principal design criteria be approved. The inclusion of the qualifier "typical" is inappropriate; however, the review addressed both the stated criteria and the meeting of that criteria in the actual design. The applicability of the criteria and parameters contained in Tables 1.2.2-2, 1.2.2-3, and 1.2.2-4 of the TR are addressed in the remainder of Section 2. The design limit for concrete temperatures referenced in Table 1.2.2-4 of the TR is not accepted because it references ACI 216 R-81 rather than ACI-349-80.

2.2 FUEL TO BE STORED

The MVDS system is designed for interim storage of irradiated LWR fuel assemblies (IFAs) in a contained and shielded system. The IFAs are stored in a dry, vertical configuration; each in an individual Shielded Storage Tube (SST), the matrix of SSTs being housed in a concrete Vault Module that

provides shielding. The proposed system is designed to permit storage of any LWR fuel which can be demonstrated to satisfy the following criteria:

	PWR	BWR
RADIOLOGICAL		
Gamma Source per assembly (MeV/sec)	9.32E15	1.85E15
Neutron Source per assembly (n/sec)	5.17E8	2.05E8
85Kr gap inventory (Ci per assembly)	116.3	46.2
CRITICALITY		
Maximum Initial Enrichment (%)	4.0	3.0

The PWR IFA radiological criteria are based on a design basis assembly with an initial enrichment of 3.2%, an irradiation of 40 GWd/Te, and a post irradiation cooling time of 5 years.

The BWR IFA radiological criteria are based on a design basis assembly with an enrichment of 2.75%, an irradiation of 33 GWd/Te, and a post irradiation cooling time of 5 years.

Alternative combinations of irradiation time, burnup, specific power, enrichment, and post irradiation cooling are acceptable radiologically, provided that the gamma ray and neutron radiation source detailed in Section 6.2.2.1 of this report are satisfied.

The criticality criteria are based on a Westinghouse 17x17 assembly, at an initial enrichment of 4% for the PWR vault module design, and a General Electric BWR-6 assembly at an initial enrichment of 3% for the BWR vault module design. Alternate fuel designs are acceptable if they can be demonstrated to be less reactive than the design basis assemblies in the vault module design.

2.3 QUALITY STANDARDS

Paragraph 72.72 of 10 CFR requires that structures, systems and components important to safety shall be designed in accordance with quality standards commensurate with the importance to safety. Basically, a quality standard should provide numerical criteria and/or acceptable methods for design, fabrication, testing and performance of structures and systems important to safety. These standards should be selected or developed to provide sufficient confidence in the capability of the structure, system or component to perform the required safety function. Since quality standards are generally embodied in widely accepted codes and standards dealing with design procedures, materials, fabrication techniques, and inspection methods, the NRC staff has offered judgments regarding the adequacy of the various standards which FW has cited in the TR. These judgments are presented in sections of this evaluation report where the standards are applicable.

2.4 PROTECTION AGAINST ENVIRONMENTAL CONDITIONS AND NATURAL PHENOMENA FOR STRUCTURAL AND MECHANICAL EQUIPMENT

Section 72.72(b)(1) of 10 CFR 72 requires the licensee to provide protection for structures, systems and components important to safety against normal operations, maintenance and testing. Sections 3.1 and 8.1 of the TR describe the structural and mechanical criteria for dead load, live load, snow and ice loads, design basis operating pressures and temperatures and handling loads.

Section 72.72(b)(2) of 10 CFR 72 requires the licensee to provide protection against environmental conditions and natural phenomena. Sections 3.2, 8.1 and 8.2 of the TR describe the structural and mechanical criteria for tornado and wind loadings, tornado missile protection, flood protection, seismic design, pressure and thermal loads due to off-normal and accident conditions, accident handling loads, accidental drop loads and combined loads.

This section of the SER discusses the adequacy of the design criteria for normal, off-normal and accident conditions for the following major structures, systems and components: (1) civil structure, (2) shielded

storage tube and plug, (3) fuel handling machine, (4) transfer cask reception bay equipment including cask trolley, and (5) the transfer cask lid modifications.

The above mentioned structures and components are important to safety because they contribute to the safe confinement of the radioactive spent fuel assemblies. The technical basis for determining the adequacy of these criteria is specified by the regulatory requirement to consider the most severe of the natural phenomena reported for the site and surrounding area, with appropriate margins to take into account limitations of data. Because the FW MVDS system has not been designed for a specific site, the regulatory requirement is interpreted to mean that the MVDS system should be reviewed against the environmental conditions and natural phenomena provided for either by the limits specified in the TR or against the most severe of the natural phenomena that may occur within the boundaries of the United States.

As can be seen in the tables of this SER which follow in the individual component area, many of the design criteria for all of the safety related components are not explicitly defined by applicable codes or regulations. FW has applied engineering judgment to determine a performance envelope or design criteria for its system which it considers satisfies the intent of 10 CFR 72.72. Therefore, this safety evaluation assesses the suitability of FW's criteria and determines, what, if any, restrictions or conditions of license should be placed on the use of the particular design. This section of the SER discusses the suitability of the criteria, whereas the next chapter discusses how well the FW MVDS system satisfies the criteria and conditions of license.

The FW ISFSI design presented in the TR is not site-specific. The design criteria do not address site characteristics as required by Regulatory Guide 3.48 for a site-specific application.

The areas which are addressed in Regulatory Guide 3.48 Section 2 but which are not specifically addressed in the FW TR are:

1. Geography and demography of site selected

2. Nearby industrial, transportation, and military facilities (aircraft impacts would be included under this area)

3. Meteorology (the FW TR generally assumes maximum credible meteorological conditions)

4. Surface hydrology

5. Subsurface hydrology

6. Geology and seismology (the FW TR assumes maximum seismic conditions for an unidentified set of potential sites for the response spectrum analysis, and the most severe U.S. seismic zone for the static analysis).

Proof that a specific proposed ISFSI meets criteria for these design conditions, as applicable, must be included in the individual application for certification.

Evaluation of the design criteria proposed by FW for design of the ISFSI involves both the criteria and the ISFSI components to which the criteria are to be applied. As an additional evaluation step, the acceptability of the design, based on the proposed or recommended alternative criteria is examined separately, in Sections 3, 4, 5, and 6 of this report. The components of concern are those meeting the definition of "structures, systems, and components important to safety" as defined above.

The designs of different elements of the FW MVDS system were driven by different factors. The designs of civil structure elements were primarily determined by the need to satisfy combinations of loads and forces reflecting normal, off-normal, and accident conditions. The design of other elements was driven by abnormal and accident loadings or situations.

The following examination of FW design criteria is organized by normal, off-normal, and accident conditions, generally following the FW organization of accident analyses (Section 8 of the TR).

2.4.1 Civil Structure

Normal Operations

Structures, systems, and components of the proposed ISFSI that are important to safety are listed in Table 3.3-1 of the TR. Item number 6 of this table is the civil structure. It does not exclude any systems or components of the civil structure as not being important to safety. The table includes a statement that "key components" (of the civil structure) "include:

"(i) The concrete structure above minus 5'-9" level up to plus 30'-0" level.

"(ii) The Charge Face Structure, including the concrete filled steel fabricated sections; the Charge Face supports and the Charge Face Slabs.

"(iii) The Outlet Duct and Canopy above plus 30'-0" level complete.

"(iv) The foundation structure (site-specific).

"(v) The RA Drain Tank (site-specific)."

The 30'-0" level is significant as up to that elevation the structure is assumed to be subject to the 510 kg utility pole and 1810 kg automobile tornado generated missiles. Other tornado generated missiles are assumed at all elevations.

The civil structure design is comprised of the architectural layout of the facility to meet functional, safety, and security requirements, and structural design to satisfy normal, abnormal, and accidental loading criteria. The principal components of the civil structure as used for the NRC staff review are listed in Table 2.4.1-1.

The criteria used by FW for the architectural design of the MVDS as determined by review of the TR and staff evaluations and recommendations relating to those criteria are in Table 2.4.1-2.

TABLE 2.4.1-1 PRINCIPAL CIVIL STRUCTURE ELEMENTS

ELEMENT	COMMENT
Foundation, below the minus 5'-9" level	Pile raft and footing alternative designs illustrated in TR. Must be addressed in site-specific application.
Rigid box structure from minus 5'-9" to plus 30'-0" levels (to plus 32'-0" at outlet duct)	Layout driven by functional requirements. Most section designs driven by radiation or tornado missile shielding requirements.
Outlet duct (exhaust stack), above plus 32'-0" with canopy	Designs driven by earthquake and tornado missile shielding requirements and tornado loads on charge hall steel structure.
Charge hall structural steel and cladding	Height determined by fuel handling machine and crane operation. Design driven by tornado wind and negative pressure loading.
Temporary gable precast concrete wall to 30'-0" level	Design driven by tornado impact and pressure loadings.
Temporary gable above 30'-0" level (structural steel and cladding)	Design driven by tornado wind and negative pressure loading.
Charge face structure	Section design driven by radiation shielding requirements.
Transfer cask reception bay	Layout driven by functional requirements. Design driven by tornado missile shielding and tornado wind and negative pressure loading.
Transfer cask reception bay external doors	Design driven by tornado wind and negative pressure loading.

TABLE 2.4.1-2 CIVIL STRUCTURE ARCHITECTURAL LAYOUT CRITERIA

COMPONENT	INFERRED FUNCTIONAL CRITERIA	STAFF EVALUATION	STAFF RECOMMENDATION
Foundation, below the minus 5'-9" level, (not an architectural design component, except for facility footprint)	Illustrative and future site-specific designs based on foundation analyses and loadings.	Adequate for illustration. Must be addressed in site-specific application.	Foundations, below minus 5'-9" elevation must be addressed in site-specific application.
Rigid box structure from minus 5'-9" to plus 30'-0" levels (to plus 32'-0" at outlet duct)	Air cooling of stored fuel.	Appropriate	Accept criterion
	Fuel handling machine movement and operation.	Appropriate	Accept criteria
	Transfer cask reception, movement, preparation for fuel transfer, and transfer to/from the fuel handling machine.	Appropriate	Accept criteria
	Radiation shielding for personnel from stored fuel and fuel in transfer.	Appropriate	Accept criteria
	Operation and maintenance of mechanical equipment space.	Appropriate	Accept criteria
	Waste processing, packaging, and temporary storage space.	Appropriate	Accept criteria
	Health-physics control station for personnel and facility monitoring and decontamination.	Appropriate	Accept criterion
	Provisions for emergency exit.	Appropriate	Accept criteria
Outlet duct above plus 32'-0" with canopy	Cooling air gravity flow.	Appropriate	Accept criterion
	Radiation shielding from vault.	Appropriate	Accept criterion
Charge hall structural steel and cladding	Weather enclosure.	Appropriate	Accept criterion
	Support monorail crane.	Appropriate	Accept criterion
Temporary gable (precast concrete wall to 30'-0" level and structural steel and cladding above 30'-0")	Weather enclosure.	Appropriate	Accept criterion
	Permit future extension.	Appropriate	Accept criterion
Charge face structure	Radioactivity shielding.	Appropriate	Accept criterion
	Position SSTs.	Appropriate	Accept criterion
	Support SST load and unload.	Appropriate	Accept criterion

TABLE 2.4.1-2 CIVIL STRUCTURE ARCHITECTURAL LAYOUT CRITERIA (continued)

COMPONENT	INFERRED FUNCTIONAL CRITERIA	STAFF EVALUATION	STAFF RECOMMENDATION
Transfer cask reception bay	Cask offloading and loading from/on transfer trailer.	Appropriate	Accept criterion
	One directional vehicular movement.	Appropriate	Accept criterion
	Cask transfer to/from cask trolley.	Appropriate	Accept criterion
	Weather enclosure.	Appropriate	Accept criterion
	Overhead crane support.	Appropriate	Accept criterion
	Doors open during unloading/loading.	Acceptable	Accept criterion

The civil structure was designed using criteria in and referenced in ANSI/ANS-57.9-1984. The references of concern are ACI 349-80 for concrete construction and AISC specifications (contained in the "Manual of Steel Construction") for steel construction. Comparisons of criteria listed in the TR and the contained and referenced requirements are shown in Table 2.4.1-3 for reinforced concrete and Table 2.4.1-4 for steel construction.

The sources cited in the TR for development of the forces or loads to be used in the load combination expressions shown in Tables 2.4.1-3 and 2.4.1-4 are identified and evaluated in Table 2.4.1-5.

Conclusions on the design criteria stated and inferred in the FW TR for "normal conditions," summarized from Tables 2.4.1-1 through 2.4.1-5 are:

1. The criteria for facility layout and support of functions (Tables 2.4.1-1 and 2.4.1-2) are suitable or appropriate and are recommended for NRC acceptance, except that design of foundations below the minus 5'-9" level and potential effects of floods, tsunamis and seiches are not addressed or are only illustrative and must therefore be included in specific site applications.

2. The criteria and load combinations stated for reinforced concrete design (Table 2.4.1-3) are based on ACI 349-80 with modifications instead of ANSI/ANS 57.9-1984. The resulting criteria are considered to provide a sufficiently suitable basis for design and it is recommended that the criteria set forth be accepted by the NRC AS AN EXCEPTION to the recommended use of ANSI/ANS 57.9-1984.

3. The criteria and load combinations stated for structural steel design (Table 2.4.1-4) closely correspond to ANSI/ANS 57.9-1984, with the addition of operating basis earthquake, and with pipe and equipment reactions broken out but treated as other live loads. The resulting criteria are considered to provide a sufficiently suitable basis for design and it is recommended that the criteria set forth be accepted by the NRC AS AN EXCEPTION to the recommended use of ANSI/ANS 57.9-1984.

TABLE 2.4.1-3 CIVIL STRUCTURE STRUCTURAL DESIGN CRITERIA - REINFORCED CONCRETE DESIGN
See FW TR Section 3.2.5.1(1) and Appendix A4-4, Calculation 2, Sheet Nos. 11 and 12

DESIGN PARAMETERS	STATED SOURCE	STAFF EVALUATION	STAFF RECOMMENDATIONS
Load Combinations Proposed by FW		Correspondence to ANSI 57.9-1984	
The required strength U shall be at least equal to the following:			
*1. U = 1.4D+1.7L+1.7H+1.7Ro	ACI 349-80	Adds Ro to 6.17.3.1(b)	Summary:
**2. U = 1.4D+1.7L+1.7H+1.7Eo+1.7Ro	ACI 349-80	Adds Ro and Eo to 6.17.3.1(b)	
**3. U = 1.4D+1.7L+1.7H+1.7W+1.7Ro	ACI 349-80	Adds Ro and W to 6.17.3.1(b)	1. Do not accept failure to use ANSI 57.9-1984 as the basic criteria. (Accept TR criteria only to extent the criteria and additional analyses meet the requirements of ANSI 57.9-1984.)
**4. U = D+L+H+To+Ro+Ess	ACI 349-80	Adds Ro to 6.17.3.1(e)	
5. U = D+L+H+To+Ro+Wt *	ACI 349-80	***Adds Ro and substitutes Wt for Design Earthquake in 6.17.3.1(e)	
6. U = D+L+H+To+Ro+A	ANSI 57.9-1984	Adds Ro to 6.17.3.1(f)	
7. U = 1.05D+1.3L+1.3H+1.05To+1.3Ro	ACI 349-80	Adds Ro and exceeds 6.17.3.1(e)	
**8. U = 1.05D+1.3L+1.3H+1.3Eo+1.05To+1.3Ro	ACI 349-80	Does not correspond	
**9. U = 1.05D+1.3L+1.3H+1.3W+1.05To+1.3Ro	ACI 349-80	Does not correspond	2. Accept treatment of design basis tornado loads in design criteria.

[See next page for definitions]

*Note: The combinations of loads presented by FW do not include expressions comparable to the following combinations contained in ANSI 57.9-1984: (a) U>1.4D+1.7L, (b) U>1.4D+1.7L+1.7H, (c) U>0.75(1.4D+1.7L+1.7H+1.7T+1.7W), and (d) U>0.75(1.4D+1.7L+1.7H+1.7T). Expressions (a) and (b) of ANSI 57.9-1984 would be satisfied by the combination No. 1, above, if the H and Ro terms are additive with the other loads, i.e., do not result in decreasing the net load used for design or check of a given structural element. The requirements of the other combinations in which Ro has been added to the comparable ANSI 57.9-1984 combinations would be met if the Ro term is additive with the other loads. ANSI 57.9-1984 requires that U be greater than (>) the combination of loads instead of "=" as used by FW. This generally has little impact on the design. The following term is used in ANSI 57.9-1984 but is not included in the structural load combination expressions presented by FW: "Ta - Loads due to a temperature rise resulting from loss of cooling air for an extended period of time or loads resulting from the maximum anticipated heat load."

**Note: ANSI 57.9-1984 does not distinguish between operating basis earthquake and safe shutdown earthquake, or between design wind and tornado loadings.

***Note: ANSI 57.9-1984 omits specific definition of treatment of tornado loads in the load combination expressions. ACI 349-80 includes loads from a design basis tornado and treats these identically to the loads of a safe shutdown earthquake. The FW TR load combinations are the same. Treating tornado loads as "loads generated by the Design Wind" per ANSI 57.9-1984 would be comparable to use as the "W" term in the FW load combination No. 9, above, which would require greater structural strength than load combination No. 5, above. The FW usage was reviewed during the FW redesign and was concurred in by the NRC staff.

TABLE 2.4.1-3 CIVIL STRUCTURE STRUCTURAL DESIGN CRITERIA - REINFORCED CONCRETE DESIGN (continued)

DEFINITION OF TERMS	STATED SOURCE	STAFF EVALUATION	STAFF RECOMMENDATIONS
		Correspondence to ANSI 57.9-1984	
Where:			
D = Dead Load (varied plus or minus 5% as required by ANSI ANS 57.9)	ACI 349-80	Same	
L = Live load inc. snow, rain, operational, superimposed load, etc. (varied 0% to 100% as required by ANSI ANS 57.0)	ACI 349-80	Same	
H = Lateral earth pressure	ACI 349-80	Same	
Ro = Pipe and equipment reactions - normal or shutdown (inc. crane loads)	ACI 349-80	Included in "T"	
W = Operating Basis Wind Load (OBW)		Apparently same	
Wt = Design Basis Tornado Load (DBT) inc. tornado generated differential pressures	ACI 349-80	Apparently not in ANSI 57.9-1984	
Eo = Loads due to Operating Basis Earthquake (OBE) (or quasi-static earthquake loading)	ACI 349-80	No distinction between earthquakes	
Ess = Loads due to Safe Shutdown Earthquake (SSE) 1:500 yr	ACI 349-80	No distinction between earthquakes	
To = Internal moments and forces caused by thermal effects during normal operating or shutdown	ACI 349-80	Included in "T"	
A = Loads due to drop of a heavy load	ACI 349-80	Same	
NB: The following loads as defined in ACI 349-80 are not applicable to this dry store design and have been omitted from the load cases:		These terms are not in ANSI 57.9-1984.	
F = Pressures due to liquids.	ACI 349-80	Omission appropriate	Accept omission
Ta = Thermal effects due to pipe break.	ACI 349-80	Omission appropriate	Accept omission
Pa = Differential pressure load due to postulated pipe break.	ACI 349-80	Omission appropriate	Accept omission
Ra = Pipe and equipment loads due to postulated pipe break.	ACI 349-80	Omission appropriate	Accept omission
Ym = Missile impact load due to postulated pipe break.	ACI 349-80	Omission appropriate	Accept omission

TABLE 2.4.1-3 CIVIL STRUCTURE STRUCTURAL DESIGN CRITERIA - REINFORCED CONCRETE DESIGN (continued)

DEFINITION OF TERMS	STATED SOURCE	STAFF EVALUATION	STAFF RECOMMENDATIONS
		Correspondence to ANSI 57.9-1984	
Yr = Reaction load due to postulated pipe break.	ACI 349-80	Omission appropriate	Accept omission
Yi = Jet impingement load due to postulated pipe break.	ACI 349-80	Omission appropriate	Accept omission

TABLE 2.4.1-3A CIVIL STRUCTURE STRUCTURAL DESIGN CRITERIA - REINFORCED CONCRETE DESIGN
See FW TR Section 3.2.5.1(1) and Appendix A4-4, Calculation 2, Sheets No. 11 and 12

CONCRETE DESIGN CRITERIA

FEATURE	DESIGN LIMIT	APPLICABLE CODE/REGS.	CORRESPONDENCE TO ACI 349-80	STAFF RECOMMENDATIONS
Comp. Strength (fd)	4000 psi (foundations)		Not limited	Accept
Comp. Strength (fM)	5000 psi (superstructure)		Not limited	Accept
Rebar Yield (fy)	60000 psi		Allowable limit	Accept
Rebar Cover	3" against earth	ACI 349-80	Same	Accept
	2" exp. to earth/weather	ACI 349-80	Equals or exceeds	Accept
	Net exp: 1 1/2" (#14 and grtr)	ACI 349-80	Same	Accept
	3/4" (#11 and smlr)	ACI 349-80	Same	Accept
	Bms and Cols: 1 1/2"	ACI 349-80	Same	Accept

TABLE 2.4.1-4 CIVIL STRUCTURE STRUCTURAL DESIGN CRITERIA - STRUCTURAL STEEL DESIGN
See FW TR Section 3.2.5.1(2) and Appendix A4-4, Calculation 2, Sheets No. 11 and 12

DESIGN PARAMETERS	STATED SOURCE	STAFF EVALUATION	STAFF RECOMMENDATIONS
Load Combinations Proposed by FW		Correspondence to ANSI 57.9-1984	
The structural steelwork shall be designed in accordance with the AISC Specification for the Design, Fabrication and Erection of structural steel for buildings and shall be based on the allowable stress design with the following load combinations for the factored strength S:			
*1. S = D+L+H+Ro	ANSI 57.9	Adds Ro to 6.17.3.2.1(b)	Summary:
2. 1.33S = D+L+H+Ro+W	ANSI 57.9	Adds Ro to 6.17.3.2.1(c)	
**3. 1.33S = D+L+H+Ro+Eo	ACI 349-80	**Adds Ro and substitutes Eo for W in 6.17.3.2.1(c)	1. Do not accept modification of ANSI 57.9-1984 as the basic criteria. (Accept criteria if in the design the requirements of ANSI 57.9-1984 are met.)
**4. 1.5S = D+L+H+Ro+To+W	ANSI 57.9	Adds Ro to 6.17.3.2.1(d)	
**5. 1.6S = D+L+H+Ro+To+Wt	ACI 349-80	**Adds Ro and substitutes Wt for E in 6.17.3.2.1(e)	
***			
**6. 1.6S = D+L+H+Ro+To+Ess	ANSI 57.9	Adds Ro to 6.17.3.2.1(e)	
7. 1.7S = D+L+H+Ro+To+A	ANSI 57.9	Adds Ro to 6.17.3.2.1(f)	2. Accept treatment of design basis tornado loads in design criteria.
[See next page for definitions]			

*Note: The combinations of loads presented by FW do not include expressions comparable to the following combinations contained in ANSI 57.9-1984: (a) S>D+L and (g) 1.7S>D+L+H+Ta. The requirements of expression (a) and of the other combinations to which Ro has been added by FW in the TR would be met if the Ro term is additive with the other loads, i.e., does not result in reducing the net load used for design or check of a given structural element. The following term is used in ANSI 57.9-1984 but is not included in the structural load combination expressions presented by FW: "Ta - Loads due to a temperature rise resulting from loss of cooling air for an extended period of time or loads resulting from the maximum anticipated heat heat load."

**Note: ANSI 57.9-1984 does not distinguish between operating basis earthquake and safe shutdown earthquake, or between design wind and tornado loadings.

***Note: ANSI 57.9-1984 omits specific definition of treatment of tornado loads in the load combination expressions. ACI 349-80 includes loads from a design basis tornado and treats these identically to the loads of a safe shutdown earthquake. The FW TR load combinations are the same. Treating tornado loads as "loads generated by the Design Wind" per ANSI 57.9-1984 would be comparable to use as the "W" term in the FW load combination No. 2, above, which would require greater structural strength than load combination No. 5, above. The FW usage was reviewed during the FW redesign and was concurred in by the NRC staff.

TABLE 2.4.1-4 CIVIL STRUCTURE STRUCTURAL DESIGN CRITERIA - STRUCTURAL STEEL DESIGN (continued)

DEFINITION OF TERMS	STATED SOURCE	STAFF EVALUATION
		Correspondence to ANSI 57.9-1984
Where:		
D = Dead Load (varied plus or minus 5% as required by ANSI ANS 57.9)		Same
L = Live load inc. snow, rain, operational, superimposed load, etc. (varied 0% to 100% as required by ANSI ANS 57.0)		Same
H = Lateral earth pressure		Same
Ro = Pipe and equipment reactions - normal or shutdown (inc. crane loads)		Included in "T"
W = Operating Basis Wind Load (OBW)		Apparently same
Wt = Design Basis Tornado Load (DBT) inc. tornado generated differential pressures		Apparently not in ANSI 57.9-1984
Eo = Loads due to Operating Basis Earthquake (OBE) (or quasi-static earthquake loading)		No distinction between earthquakes
Ess = Loads due to Safe Shutdown Earthquake (SSE) 1:500 yr		No distinction between earthquakes
To = Internal moments and forces caused by thermal effects during normal operating or shutdown		Included in "T"
A = Loads due to drop of a heavy load		Same

TABLE 2.4.1-4A CIVIL STRUCTURE STRUCTURAL DESIGN CRITERIA - STRUCTURAL STEEL DESIGN
See FWEA TR Section 3.2.5.1(2) and Appendix A4-4, Calculation 2, Sheets No. 11 and 12

STEEL DESIGN CRITERIA

FEATURE	DESIGN LIMIT	APPLICABLE CODE/REGS.	CORRESPONDENCE TO AISC M011	STAFF RECOMMENDATIONS
ASTM A36 Steel	Yield: 36 ksi (Fy)	AISC M011 (Man. of St. Const.)	Equal for shapes used in MVDS	Accept
ASTM A441 Steel Plates and Bars	t < = 3/4" : 50 ksi	AISC M011	Same	Accept
	3/4" < t < = 1 1/2" : 46 ksi	AISC M011	Same	Accept
	1 1/2" < t < = 4" : 42 ksi	AISC M011	Same	Accept
AISC Shape Gp.	1,2 : 50 ksi	AISC M011	Same	Accept
	3 : 46 ksi	AISC M011	Same	Accept
	4,5 : 42 ksi	AISC M011	Same	Accept

TABLE 2.4.1-5. CIVIL STRUCTURE STRUCTURAL DESIGN PARAMETRIC VALUES PRESENTED AS DESIGN CRITERIA

(See load combination criteria presented in FW TR and at Tables 2.4.1-3 and 2.4.1-4)

PARAMETER	VALUES PROPOSED FOR USE	SOURCE	STAFF EVALUATION	NRC COMMENT
D - Dead load	As calculated, varied +/- 5%	MVDS Design. Variation per ANSI 57.9 - 1984	Appropriate if in use permanent equipment and piping are included	Accept
L - Live load	Include snow, rain, operational, superimposed loads, etc., varied 0 to 100%	Inclusions per ANSI 57.9 - 1984 (includes impact and vibratory loads due to operational equipment)	Appropriate if design includes any impact and vibratory loads due to operational equipment.	Conditionally accept, subject to inclusion of any impact and vibratory loads due to operation equipment.
	Floors: 200 psf	Not stated	Suitable to conservative per ANSI A58.1	Accept
L - Operational loads	Equipment (cranes and fuel handling machine)	MVDS Design		
L - Wind loads	Wind speed @ 33':110 mph	ANSI A58.1	Appropriate	Accept
	Exposure Category: C	ANSI A58.1	Appropriate	Accept
	Gust response factor: 1.19	ANSI A58.1	Appropriate	Accept
	Velocity pressure exposure coefficient: 1.24 (70')	ANSI A58.1	Appropriate	Accept
	Importance factor: 1.11	ANSI A58.1	Appropriate	Accept
	Velocity pressure: 47.3 psf (@ 70', lower for lower heights)	ANSI A58.1	Appropriate	Accept
	Design wind pressure: 56.3 psf x pressure coefficient (@ 70', lower for lower heights)	ANSI A58.1	Appropriate	Accept

TABLE 2.4.1-5. CIVIL STRUCTURE STRUCTURAL DESIGN PARAMETRIC VALUES PRESENTED AS DESIGN CRITERIA (continued)
(See load combination criteria presented in FW TR and at Tables 2.4.1-3 and 2.4.1-4)

PARAMETER	VALUES PROPOSED FOR USE			SOURCE	STAFF EVALUATION	NRC COMMENT
Tornado wind loads	Maximum wind speed: 360 mph (290 mph rotational +70 mph travel)			Reg Guide 1.76	Appropriate	Accept
	Radius of maximum rotational wind speed: 150'			Reg Guide 1.76	Appropriate	Accept
	Maximum pressure drop: 3.0 psi			Reg Guide 1.76	Appropriate	Accept
	Rate of pressure drop: 2.0 psi/sec			Reg Guide 1.76	Appropriate	Accept
	Maximum wind velocity and maximum pressure drop not at same point			Demonstrated by calculations	Appropriate	Accept
Tornado generated missiles		Mass(kg)	Vel(m/sec)			
Any elevation or angle	Wood plank	52	83	NuReg 0800	Appropriate	Accept
	6" sch 40 pipe	130	52	NuReg 0800	Appropriate	Accept
	1" st. rod	4	51	NuReg 0800		
	12" sch 40 pipe	340	47	NuReg 0800	Appropriate	Accept
Up to 30' elevation	Utility pole	510	55	NuReg 0800	Appropriate	Accept
	Automobile	1810	59	NuReg 0800	Appropriate	Accept

TABLE 2.4.1-5. CIVIL STRUCTURE STRUCTURAL DESIGN PARAMETRIC VALUES PRESENTED AS DESIGN CRITERIA (continued)
(See load combination criteria presented in FW TR and at Tables 2.4.1-3 and 2.4.1-4)

PARAMETER	VALUES PROPOSED FOR USE	SOURCE	STAFF EVALUATION	NRC COMMENT
Snow loads	Ground snow load: 100 psf	ANSI A58.1	Exceeds all but US mountain sites	Accept
	Flats and roofs to 15 degrees: 91 psf	ANSI A58.1	Exceeds all but US mountain sites	Accept
	Drifting per 7.7 and Figure 12	ANSI A58.1	Appropriate	Accept
	Temperature coefficient: 1.2	ANSI A58.1	Appropriate	Accept
	Importance factor: 1.2	ANSI A58.1	Appropriate	Accept
Earthquake loadings quasi-static analyses	Z, Seismic zone coefficient: 1.0	ANSI A58.1	Appropriate	Accept
	I, Occupation importance factor: 1.5	ANSI A58.1	Appropriate	Accept
	S, Soil profile coefficient: 1.2 & 1.5	ANSI A58.1	Appropriate for assumed soils	Accept for illustration
	C,K,W: Structure dependent	ANSI A58.1	Appropriate	Accept
Response spectrum analysis	Two levels of earthquake: Eo Operating Basis Earthquake (OBE) Ess Safe Shutdown Earthquake (SSE)	Reg Guide 1.60	No distinction between earthquakes in ANSI/ANS 57.9-1984 Distinction in Reg Guide 1.60	Conditionally accept subject to use in the response spectrum analysis
	Horizontal ground acceleration = 0.25g for SSE to be used for design	Reg Guide 1.60 Figures 1 & 2 .25g derived from FSAR for 16 plant sites (per EA 86/18)	0.25g only appropriate if validated by site specific application	Conditionally accept. Site application must validate 0.25g maximum horizontal ground acceleration
	Damping % of critical:	Reg Guide 1.61		
	Structural Steel: 3% OBE	Averaged for bolted and welded steel connections	Conservative assumption	Accept
	5% SSE		Conservative assumption	Accept
	Reinforced Concrete: 4% OBE	Per Regulatory Guide	Conservative assumption	Accept
	7% OBE	Per Regulatory Guide	Conservative assumption	Accept

TABLE 2.4.1-5. CIVIL STRUCTURE STRUCTURAL DESIGN PARAMETRIC VALUES PRESENTED AS DESIGN CRITERIA (continued)
(See load combination criteria presented in FW TR and at Tables 2.4.1-3 and 2.4.1-4)

PARAMETER	VALUES PROPOSED FOR USE	SOURCE	STAFF EVALUATION	NRC COMMENT
Temperature loads	As calculated (using):	Included calculations		
	Maximum ambient temperature 54 degrees C short term		Appropriate	Accept
	Maximum ambient temperature 38 degrees C medium term		Appropriate	Accept
	Minimum ambient temperature -40 degrees C short term		Appropriate	Accept
	Minimum ambient temperature -29 degrees C medium term		Appropriate	Accept
	Maximum cross falls: Exhaust stack: 17.2 degrees C		Appropriate	Accept
	Maximum cross falls: Division wall between cells: 60 degrees C		Appropriate	Accept
	Maximum cross falls: End walls of vaults: 60 degrees C		Appropriate	Accept
	Maximum cross falls: Cell floors: 55 degrees C		Appropriate	Accept
	Converted to B.M. in reinforced concrete by: Mt = L Tx Ec Ic/h	Engineering relationships	Appropriate	Accept

4. The FW TR reinforced concrete and structural steel design criteria (Tables 2.4.1-3 and 2.4.1-4) provide for the treatment of tornado wind (and pressure drop) loads in the same manner as safe shutdown earthquake loads. This is the same way earthquake loads are treated in ANSI/ANS 57.9-1984, but is less conservative than the manner in which design wind loads are treated. The NRC staff considers the FW TR treatment of tornado wind (and pressure drop) loads appropriate. It is recommended, as an independent action, that either ANSI/ANS 57.9-1984 be modified to clarify the appropriate treatment of tornado loads or Regulatory 3.60 be revised to address this matter in its endorsement of ANSI/ANS 57.9-1984.

5. The FW TR reinforced concrete and structural steel design criteria (Tables 2.4.1-3 and 2.4.1-4) provide for both safe shutdown and operating basis earthquake loads, which are subject to different factors of safety. They correspond to older guidance (i.e., Reg. Guide 1.60) and standards (i.e., ACI 349-80). ANSI/ANS 57.9-1984 only provides for a "design earthquake," which is treated as was the safe shutdown earthquake in ACI 349-80. The result is that the FW TR may have addressed more earthquake load cases than necessary, but that the result was use of criteria which are no less stringent than if ANSI/ANS 57.9-1984 were followed exactly. The earthquake criteria used by FW are recommended for NRC acceptance.

6. The FW TR structural design parametric values presented for use as design criteria (Table 2.4.1-5) are considered appropriate or sufficiently suitable to constitute adequate design criteria with the following exceptions. The minimum 0.25 g horizontal and 0.25 g vertical ground accelerations for the response spectrum analysis is based on boundary specific potential MVDS sites and may not be adequate for all future site-specific submittals. (These accelerations were used only as input for a limited number of FEM analyses, not for design. However, Table 3.2-1 of the TR makes it clear that the actual design criteria, as used by FW, are 0.17g vertical and 0.25g horizontal ground accelerations.) The effects of impact and vibratory loads are not specifically addressed as

part of the live load design criteria, but they also do not affect design driven by the tornado and earthquake loadings (i.e., do not occur concurrently per combination of load expressions). It is recommended that the NRC accept the structural design parametric values (as shown in Table 2.4.1-5) as design criteria for the FW MVDS with the condition that the validity of the 0.25 g maximum for horizontal and vertical seismic ground accelerations must be validated in any site-specific application, or that the application be accompanied by a new design analysis and corresponding designs.

Off-Normal Conditions

The load combinations used for design (see Tables 2.4.1-3 and 2.4.1-4) provide for the inclusion of off-normal and accident loads.

The FW TR includes descriptions of "off-normal events" (in TR section 8.1.2) and corresponding analysis of design suitability, relating to various elements of the MVDS (other than the civil structure). The events considered to have possible civil structure design criteria implications are listed in Table 2.4.1-6. The table identifies whether the FW TR includes an affect upon, or associated criteria for, the civil structure design and evaluation of the FW TR criteria (or lack thereof).

In summarizing the off-normal events described in the FW TR, it is considered that the treatment of their implications for civil structure design criteria is adequate. NRC acceptance of the included FW TR off-normal event descriptions for civil structure implications is recommended.

A further concern is whether there may be off-normal events with civil structure design criteria implications which have not been identified and addressed by FW at TR Section 8.1.2, have not been included as "accidents" (at TR Section 8.2) or have not been adequately treated in the actual design.

Review of the FW TR Sections 8.1.2 and 8.2 suggests that impact loads (which would be transmitted to the civil structure) due to off-normal overhead and monorail crane operation have not been included in the listing

TABLE 2.4.1-6. FW TR "OFF-NORMAL EVENTS" WITH POTENTIAL CIVIL STRUCTURE DESIGN IMPLICATIONS

(Reference: FW TR Section 8.1.2)

OFF-NORMAL EVENT	CIVIL STRUCTURE DESIGN IMPLICATIONS PER TR	STAFF EVALUATION	NRC COMMENTS
Transfer Cask (TC) collides with load/unload port (LUP) (section 8.1.2.1)	None since LUP is of "robust construction" of adequate mechanical strength.	Qualitative statements should be verified.	Accept omission (per staff review of actual LUP design)
TC falls off TC trolley (section 8.1.2.3)	None stated except possible collision of trolley and roller doors. Design to prevent seismic cause of fall at Section 8.2.2.4.	Civil structure elements would receive the impact of fall. Implications of fall should be addressed.	Accept omission (per staff review of actual design of structure). The level of potential damage to structure or door does not have safety implications.
Full and partial blockage of air inlet to vault module (section 8.1.2.14)	Increase in temperature. Full blockage included in thermal calculations.	Appropriate criteria calculated.	Accept
Failure to load vault module in accordance with loading scheme (section 8.1.2.19)	No significant implications.	Partial loading never worse than full loading.	Accept
Dropped charge face slab (section 8.1.2.22)	Superficial damage.	Impact loadings trivial compared to design loads.	Accept

of events. Certain impact loads would most likely occur: (1) if a load were being carried and were suddenly dropped and then caught by the crane before impact with the structure; (2) if a load were being lowered and movement was abruptly halted; or (3) if the cable supports suddenly allowed lowering of the load (such as a cable slipping off a sheave). The appropriate impact criteria for these cases is contained in NOG-1-1983 (Ref. 4). The NRC staff recommends that FW verify in any site-specific application that this eventuality is properly catered for in the civil structure. NRC acceptance of the FW TR off-normal event analysis as sufficiently comprehensive and appropriate with regard to the civil structure is recommended with the condition that site-specific applications must address the possibility of impact loads due to off-normal overhead and monorail crane operation.

Accident Conditions

The FW TR includes descriptions of "accidents" (at TR Section 8.2) and corresponding analysis of design suitability, relating to various elements of the MVDS. Those "accidents" considered to have potential civil structure design criteria implications are listed in Table 2.4.1-7. The table identifies whether the FW TR includes an effect upon, or associated criteria for, the civil structure design and evaluation of the FW TR criteria (or lack thereof).

In summarizing the "accident" events described in the FW TR, the treatment of implications for civil structure design criteria is considered adequate except for vehicular impact with the transfer cask reception bay which is left for site-specific traffic control measures. NRC acceptance of the FW TR accident event descriptions with civil structure implications is recommended with the condition that site-specific applications must address the possibility of control of vehicular impacts with the transfer cask reception bay structure.

A further concern is whether there may be accident events with civil structure design criteria implications which have not been identified and addressed by FW at TR Section 8.2 or have not been included as "off-normal" events (at TR Section 8.1.2), or adequately treated in the actual design.

TABLE 2.4.1-7. FW TR "ACCIDENTS" WITH POTENTIAL CIVIL STRUCTURE DESIGN CRITERIA IMPLICATIONS

(Reference: FW TR Section 8.2)

ACCIDENT	CIVIL STRUCTURE DESIGN IMPLICATIONS PER TR	STAFF EVALUATION	STAFF RECOMMENDATIONS
Tornado wind loads (section 8.2.1.1)	Civil structure designed to survive tornado wind and pressure drop loads without damage, except for door of transfer cask reception bay. Door to be opened in case of tornado warning. Event of door not being opened is addressed at 8.2.18 (below).	Appropriate	Accept
Tornado missiles (section 8.2.1.2)	Civil structure designed to survive tornado missile impacts at or below 30' above grade, to provide full protection of the fuel, and to limit radiological consequences of impacts above that level in any direction. Impact sites listed. Damage to walls accepted. Damage to steel frame member possible, designed to preclude structural collapse due to loss of a single member. Variety of missile impact cases addressed.	Combinations of missiles, direction of travel, and points of impact addressed considered sufficient to provide appropriate civil structure design criteria.	Accept

TABLE 2.4.1-7. FW TR "ACCIDENTS" WITH POTENTIAL CIVIL STRUCTURE DESIGN CRITERIA IMPLICATIONS (continued)
(Reference: FW TR Section 8.2)

ACCIDENT	CIVIL STRUCTURE DESIGN IMPLICATIONS PER TR	STAFF EVALUATION	STAFF RECOMMENDATIONS
Earthquake (section 8.2.2)	Safe shut down earthquake used. Civil structure designed to withstand earthquake loads (per load combinations shown in Tables 2.4.1-3 and 2.4.1-4). Verification by static, response spectrum, and time history analyses.	Appropriate	Accept
Vehicle impact (section 8.2.3)	Considered to be controllable by site specific traffic management design and control of construction equipment; be probably less than worst tornado missile impact which civil structure is required to withstand. Vehicular impact not included in design.	Vehicular impact in the vicinity of the transfer cask reception bay is considered to be sufficiently probable as to require consideration as a danger criteria for either the civil structure, traffic management structures, or both. Construction vehicle and equipment impact are considered to be within magnitude of worst tornado missiles.	Conditionally accept FW TR on provision that vehicle impact in transfer cask reception bay area be addressed in site specific applications.

TABLE 2.4.1-7. FW TR "ACCIDENTS" WITH POTENTIAL CIVIL STRUCTURE DESIGN CRITERIA IMPLICATIONS (continued)
(Reference: FW TR Section 8.2)

ACCIDENT	CIVIL STRUCTURE DESIGN IMPLICATIONS PER TR	STAFF EVALUATION	STAFF RECOMMENDATIONS
Transfer Cask dropped (section 8.2.4)	Civil structure implications are not addressed. High integrity crane design used to minimize probability.	Civil structure elements would receive the impact of the fall. Implications of the fall should be addressed (negligible except damage to rails possible per staff review of the design). The level of potential damage for the civil structure does not have safety implications.	Accept omission (per staff review of actual design of structure).
IFA dropped into SST (section 8.2.7)	None stated.	Potential impact as load transmitted to the cell floor. Per inspection of cell floor design (TR Appendix A4.4 calculation 106, paragraph 8.0) the impact load would be trivial compared to design loads and can be neglected).	Accept
Tornado missile impact on FHM (section 8.2.10)	None stated.	Impact load transmitted to FHM rails and supporting structure. Considered to be of less consequence than a direct missile impact (addressed at 8.2.1.2).	Accept

TABLE 2.4.1-7. FW TR "ACCIDENTS" WITH POTENTIAL CIVIL STRUCTURE DESIGN CRITERIA IMPLICATIONS (continued)
(Reference: FW TR Section 8.2)

ACCIDENT	CIVIL STRUCTURE DESIGN IMPLICATIONS PER TR	STAFF EVALUATION	STAFF RECOMMENDATIONS
(Tornado missile) impact on charge face (section 8.2.11)	Transmission of impact loads to the charge face structure from worst possible missile loading. Charge face structure to absorb load without damage.	Appropriate	Accept
Partial blockage of outlet duct (section 8.2.12)	Within scope of temperature use calculations for even 80% blockage. 80% blockage shown to not be a statistical probability.	Appropriate	Accept
TCRB access door blown inward (section 8.2.18)	None stated (other than the door and its supports), which are to survive maximum wind loads (non-tornado) but are not expected to survive a tornado.	Potential damage from impact of door with civil structure reviewed and considered to not constitute a safety problem.	Accept

FW TR Sections 8.1.2 and 8.2 do not address of the possibility of aircraft impact, floods, tsunamis, seiches, or other site-specific situations, except as noted earlier in this section. These, and other accident, off-normal, and normal design criteria which would stem from addressing site characteristics, as expained by Section 2 of Regulatory Guide 3.48, should accompany the site-specific application. It is considered that the FW TR adequately identifies credible "accidents" which have civil structure implications. NRC acceptance of the accidents identified by FW in the TR as an adequately comprehensive list for the non-site-specific design is recommended, with recognition that the Part 72 requirements cited in Regulatory Guide 3.48 Section 2 must be met by any subsequent site-specific application.

2.4.2 Shielded Storage Tube and Plug

Foster Wheeler has cited the general provisions of ASME Boiler and Pressure Vessel Code 1983 Section VIII Division 1 as the design criteria for the SST and plug. However, it states that the SST and plug do "not constitute a pressure vessel." Because Section VIII of the Code is entitled "Pressure Vessels," and because this section of the Code was not intended for nuclear application, the suitability of this Code is questionable. The fact that the maximum SST internal pressure can only reach 9 psig and 8.3 psig for PWR and BWR fuel respectively before the plug lifts and the confinement barrier is breached is a weak argument for selecting this section of the Code.

FW has considered a fairly wide spectrum of accident cases where the confinement barrier could be breached and has shown (1) a very low probability for occurrence, (2) low radiological consequences for an occurrence, and (3) a reasonably plausible method for recovery from the accident. However, for one of the SST accident cases, FW predicted large plastic deformations which are not allowed by Section VIII, Division 1 of the Code. Therefore, this Section of the Code is not acceptable as a design criteria for the SST. The NRC staff recommends that FW select Section III, Division 1, Service Level D for this component. This recommendation is discussed more fully in Section 3.3.4.2 of this SER.

For normal operations FW provided design parameters only for internal operating pressure and dead load for the SST and plug. For the shield plug seals, FW specified a twenty year life. For off-normal conditions the only parameters specified were overpressure of the SST with and without relief valve operation. FW specified a full complement of design parameters for accident cases including tornado winds, tornado driven missiles, seismic, flooding of SST, IFA drop into SST, plug drop onto SST, IFA jamming during insertion into SST, and degradation of shield plug seal. FW did not specify an operating basis temperature as part of the normal design parameters for the SST. The staff can accept this omission because the SST is not constrained either axially or radially at the top of the SST/charge face structure. Thus no differential thermal expansion stresses are induced. Temperature gradients through the thin wall of the SST are also negligible. With the exception of the use of Section VIII, Division of the ASME B&PV Code, the NRC staff finds the criteria as presented in the TR and shown in tables 2.4.2-1, 2.4.2-2, and 2.4.2-3 of this SER to be acceptable.

2.4.3 Fuel Handling Machine and Its Bridge and Trolley

Foster Wheeler has selected the ANSI/ASME, "Rules for Construction of Overhead Gantry Cranes" NOG-1-1983 as the design criteria for the fuel handling machine and the bridge and trolley. The scope of this Code covers "electric overhead and gantry multiple girder cranes with top running bridge and trolley used at nuclear facilities and components of cranes at nuclear facilities." (Ref. 4). ANSI/ANS 57.9 specifies that the NOG-1-1983 Code be used for design and testing as well as maintenance and inspection of cranes and other fuel handling equipment (Ref. 3).

NOG-1-1983 defines three types of safety classifications for cranes. The Type I crane is designated as a crane which may be used to handle a "critical load," and as such it shall have single failure-proof features so that any CREDIBLE FAILURE of a single component will not result in the loss of capability to stop and hold the critical load. The critical load is defined as a lifted load whose uncontrolled release could adversely affect any safety related system or could result in a potential off-site exposure in excess of a limit determined by the Purchaser.

TABLE 2.4.2-1

DESIGN CRITERIA - NORMAL OPERATING CONDITIONS

Component	Design Load Type	Design Parameters		Applicable Codes/Regulations	NRC Comments
		PWR	BWR		
Shielded Storage Tube and Shield Plugs/Seals	Dead load with IFA	3405 lb.	1597 lb.	General provision of ASME Boiler and Pressure Vessel Code (1983) Section VIII, Division 1	Section VIII is not a nuclear section of the code. NRC recommends Section III, Division 1.
	Design basis internal operating pressure for nitrogen	3.25 psig nominal 15" water gage depression during loading 20 mbar leak test		See above	Negligible stress.
	Design basis operating temp.	+31 deg. band width		See above	
	Corrosion resistance for 20 year design life	N/A		N/A	Verified by SER from TR reference.
Shielded Storage Tube Plug Seals		Seal service life of 20 years		N/A	Criteria acceptable but not met. See Ch. 5 of SER.

TABLE 2.4.2-2

DESIGN CRITERIA - OFF-NORMAL OPERATING CONDITIONS

Component	Design Load Type	Design Parameters		Applicable Codes/Regulations	NRC Comments
		PWR	BWR		
Shielded Storage Tube and Shield Plugs/Seals	Overpressure of SST for N2 system	5 psig 9 psig	5 psig 8.5 psig	N/A	Relief valve set at 5 psig. Plug lifts at higher pressure identified. Satisfactory Verified by SER.
	Loading an IFA into previously loaded SST	Not specified. Lowering speed cannot exceed 30 in/min		N/A	Although not analyzed in TR, this case is bounded by dropping an IFA into empty SST.
	Full and partial blockage of air inlet to MVDS module	Partial blockage Peak fuel temp = 195 degrees C Full blockage Peak fuel temp = 200 degrees C		N/A	Although thermally bistable this case is bounded by accident case.

TABLE 2.4.2-2 (Continued)

DESIGN CRITERIA - OFF-NORMAL OPERATING CONDITIONS

Component	Design Load Type	Design Parameters	Applicable Codes/Regulations	NRC Comments
Shielded Storage Tube and Shield Plug Seals	SST shield plug fails to reseal	Vacuum test then pressurize to 1.25 psig	N/A	Operating procedure calls for inserting a second SST plug and failing that as a solution, replacing SST.
	Movement of FHM with service tool engaged in SST	Not specified	N/A	Damage to various gas system components will be assessed and repaired in event of off-normal condition.
	Dropped charge face slab impacts SST or gas services pipe network	Not specified	N/A	Damage to various gas system components will be assessed in the event of off-normal condition.

TABLE 2.4.2-3

DESIGN CRITERIA - ACCIDENT CONDITIONS

Component	Design Load Type	Design Parameters	Applicable Codes/Regulations	NRC Comments
Shielded Storage Tube and Shield Plugs/Seals	Tornado winds	Max. wind speed=360 mph Rotational speed=290 mph Translational speed= 70 mph Max. pressure drop= 3. psi Rate of 2.0 psi/sec	NRC Reg. Guide 1.76 ANSI/ANS 2.3-83 ASME Section VIII, Division 1	Adequate, except Section VIII
	Design basis tornado missile falls through stack and impacts SST	Steel rod 1" diam. x 36" long falls 60 ft.	NUREG-0800 Section 3.5.14 ASME Section VIII, Division 1	Verified by SER, except Section VIII
	Design basis tornado missile impacts SST plug	Steel pipe 12" diam. x 180" long with velocity 108 ft/sec	NUREG-0800 Section 3.5.14 ASME Section VIII, Division 1	Verified by SER must invoke recovery procedure
	Seismic	Horizontal ground acceleration = 0.25g Vertical ground acceleration = 0.17g	NRC Reg. Guide 1.60, 1.61 ASME Section VIII, Division 1	Adequate, except Section VIII

TABLE 2.4.2-3 (Continued)

DESIGN CRITERIA - ACCIDENT CONDITIONS

Component	Design Load Type	Design Parameters	Applicable Codes/Regulations	NRC Comments
Shielded Storage Tube and Shield Plugs/Seals	SST plug drop into SST tube	Drop height of plug = 83.5 inches	General provisions of ASME Section VIII, Division 1	ASME Code VIII, Division 1 is inappropriate. NRC recommends use of Section III, Division 1 Must invoke recovery procedure.
	IFA drop into SST tube (a) SST does not rupture (b) Any SST deformation does not affect adjacent SSTs (c) Resulting vault floor pressure < 5 ksi	Drop height of IFA = 275 inches	ASME Section VIII, Division 1	Must invoke recovery procedure (a) Adequate, verified by SER (b) Adequate (c) Adequate, verified by SER Section III, Division 1 is recommended by NRC

TABLE 2.4.2-3 (Continued)

DESIGN CRITERIA - ACCIDENT CONDITIONS

Component	Design Load Type	Design Parameters	Applicable Codes/Regulations	NRC Comments
Shielded Storage Tube and Shield Plug Seals	IFA drop into SST (continued from previous page)	Drop height of IFA = 275 inches	ASME Section VIII, Division 1	ASME Code VIII is inappropriate NRC recommends use of Section III, Division 1.
	Thermal effects due to fuel rod compaction	Max. fuel rod temp. = 250 degrees C	N/A	Verified by SER must invoke recovery procedure
	IFA jammed during insertion	Max. fuel rod temp. = 220 degrees C	N/A	Verified by SER must invoke recovery procedure
	Partial blockage of outlet duct causing heating of fuel	Max. fuel rod with temperature 80% blockage = 202 deg. C	N/A	Verified by SER must invoke recovery

TABLE 2.4.2-3 (Continued)

DESIGN CRITERIA - ACCIDENT CONDITIONS

Component	Design Load Type	Design Parameters	Applicable Codes/Regulations	NRC Comments
Shielded Storage Tube and Shield Plugs/Seals	SST shield plug seal degrades	20 year seal life	N/A	Criteria adequate, however data supports only 5 year seal life expectancy. Must invoke recovery procedure if leaky seal is defected. Must test every 5 years.
	Internal flood of SSTs	Rain entry through hole in roof caused by tornado missile.	N/A	Low probability. Must be addressed by site specific case.

Foster Wheeler has selected the Type I designation to apply to the fuel handling machine bridge and trolley and the FHM IFA hoist. It has selected the Type II designation for the hoists which lift the shield plug, nose unit sleeve, the shielding skirt and the nose unit. Type II cranes do not handle critical loads and are not required to have single failure-proof features, but must remain in place during a seismic event.

The NRC staff concurs with the safety classification as selected by FW. The staff also finds that the NOG-1-1983 Code is suitable for use for the design and construction of the FHM and the bridge and trolley.

For normal operations FW provided design parameters only for the dead loads for the fuel handling machine crane (FHMC). For a preliminary design this is adequate; however, for this final design, FW will need to comply with NOG-4132, 4133, and 4140. Table 2.4.3-1 of the SER summarizes the suitability of the design criteria for the FHMC for normal operations. FW identified five off-normal load conditions which have no structural implications. They are summarized in Table 2.4.3-2 of this SER. For accident conditions the FHMC must withstand a seismic event without dropping the critical load. FW has selected its criteria in accordance with NOG-4000; however, it has not identified all load conditions as specified by Table NOG-4153.7-1 or Table NOG-4153.7-2, which are required for the final design. FW also postulated tornado wind and tornado driven missile impact on the FHM and determined no appreciable structural consequences. Table 2.4.3-3 summarizes these criteria. The NRC staff accepts the design criteria as stated in the TR.

2.4.4 Transfer Cask Reception Bay Equipment

The loads on the MVDS system as a result of normal operating conditions include dead weight loads, design basis live loads, design basis internal pressure loads, design basis thermal loads, design basis dose rates and operational handling loads. Table 2.4.4-1 presents a summary of the normal operating loads, the MVDS equipment/components directly affected by these loads and the associated design parameters.

TABLE 2.4.3-1

DESIGN CRITERIA - NORMAL OPERATING CONDITIONS

Component	Design Load Type	Design Parameters	Applicable Codes/Regulations	NRC Comments
Fuel Handling Machine and Its Bridge and Trolley				NRC staff finds that NOG-1-1983 is suitable as a design code, however FW has not shown supporting calculation for the following NOG-1 requirements: NOG 4132 - Live Load; NOG 4133 - Impact Load; NOG 4140 - Load Comb.
FHM Base	Dead load	21. long tons	NOG-1-1983	
FHM Upper Assembly	Dead load	56. long tons		
FHMC Trolley	Dead load	34.5 long tons		
FHMC Bridge	Dead load	65.5 long tons		
Trolley Wheel	Dead load	28.17 long tons	NOG-5452	

TABLE 2.4.3-2

DESIGN CRITERIA - OFF-NORMAL OPERATING CONDITIONS

Component	Design Load Type	Design Parameters	Applicable Codes/Regulations	NRC Comments
Fuel Handling Machine and Its Bridge and Trolley				
Skirt not lowered before fuel handling	Increased radiation hazard	160 rem/hr.	N/A	Gamma monitors should alarm and operator can take recovery procedure.
Short term loss of electrical power	Temperature rise of IFA	Not defined	N/A	Enveloped by accidental long term loss of power.
FHM motion with IFA partially inserted			N/A	Low probability of occurrence due to highly interlocked safety systems. NRC to accept rationale.
Loading IFA into already loaded SST	Impact of IFA 30 in/min. IFA, no radiological consequences	2 x dead load on IFA	N/A	Bounded IFA drop accident. Recommend accept criteria.

TABLE 2.4.3-2 (Continued)

DESIGN CRITERIA - OFF-NORMAL OPERATING CONDITIONS

Component	Design Load Type	Design Parameters	Applicable Codes/Regulations	NRC Comments
FHM depression system fan failure	Potential contaminated gas release	Not defined	N/A	Ventilation and off-gas system to cater for release. Bounded by drop accident. Recommend accept criteria.

TABLE 2.4.3-3

DESIGN CRITERIA - ACCIDENT CONDITIONS

Component	Design Load Type	Design Parameters	Applicable Codes/Regulations	NRC Comments
Fuel Handling Machine and Its Bridge and Trolley				
FHMC bridge beam	Seismic	125.14 long tons	Reg. Guide 1.60 and 1.61 NOG-1-1983	Criteria are suitable, however FW has not shown final supporting calculations.
FHM	Seismic	Design horizontal acceleration 0.25g Design vertical acceleration 0.17g with 5% damping	NRC Reg. Guide 1.60 and 1.61 10 CFR 72.66(a)(6)(i)	Vertical and horizontal acceleration, conform with RG 1.60. Damping of 5% not conservative for welded steel structure per RG 1.61. Otherwise acceptable.
FHM	Tornado wind	Pressure drop of 3 psig at rate of 2 psi/sec	NRC Reg. Guide 1.76	Acceptable

TABLE 2.4.3-3 (Continued)

DESIGN CRITERIA - ACCIDENT CONDITIONS

Component	Design Load Type	Design Parameters	Applicable Codes/Regulations	NRC Comments
FHM	Tornado driven missile	750 lb. 12" Sch. 40 pipe with a 150 mph horizontal velocity	NUREG-0800 3.5.1.4	This missile postulated to penetrate chargehall wall and impact FHM. Acceptable.

TABLE 2.4.4-1

DESIGN CRITERIA - NORMAL OPERATING CONDITIONS

Component	Design Load Type	Design Parameters	Applicable Codes/Regulations	NRC Comments
Transfer Cask Trolley				
Primary load bearing structural members	Dead load Live load	Trolley wt. 12000 lb. Loaded cask wt: 48000 lb.	ANSI/ASME NOG-1-1983 Safety Classification Type 1	
Drive components				
Cask restraining clamp system	Vertical impact	.15x live load		
	Acceleration Deceleration load	.10 (live load + dead load) Construction material allowables		
Transfer Cask Load/Unload Port (LUP)				
Jacking system support system	Dead load	Rising plug wt: 32455 lb	N/A	
	Live load	Construction material properties	ASTM A 36 ASTM A 148-73 ASTM A 320 Grade L7	
Jacking system drive components	Dead load	Rising plug wt: 32455 lb	N/A	
	Live load			

TABLE 2.4.4-1 (Continued)

DESIGN CRITERIA - NORMAL OPERATING CONDITIONS

Component	Design Load Type	Design Parameters	Applicable Codes/Regulations	NRC Comments
Shielding provisions	Design basis dose rates	Gamma source terms for PWR and BWR IFAs	ANS 57.9 Appen. B	
Transfer Cask Handling Crane	Dead load	Crane specific	N/A	
	Live load	Loaded cask wt: 48000 lb	N/A	
		Lifting yoke wt: site specific	N/A	
	Vertical impact load	.15x live load	ANSI/ASME	
		Construction material allowables	NOG-1-1983 Safety Class. Type 1	

The transfer cask handling crane will be designed, manufactured and tested to ANSI/ASME NOG-1-1983 Type 1 by the crane subcontractor. In the absence of a specification unique to the transfer cask trolley, the trolley was equated to a crane trolley under the relevant sections of crane code ANSI/ASME NOG-1-1983. Criteria for impact loading, acceleration/deceleration loading, load combinations, allowable stress, material properties, etc., were obtained from this code. The staff considers the use of the crane code and the associated criteria acceptable.

FW did not identify criteria to which the transfer cask load/unload port are to be designed. The material properties for the TC LUP were obtained from associated ASTM material specifications. These material specifications are acceptable to the staff.

Off-normal events are expected to occur at a moderate frequency. These events include instantaneous arrest of the trolley while transporting a cask and collision of the TC with the LUP. Table 2.4.4-2 presents a summary of off-normal events, the MVDS equipment/components directly affected by these events and the associated design parameters. During cask transfer operations on the transfer cask trolley, the cask must not overturn in the event the cask is suddenly restrained while the trolley is in motion, i.e., collision with the load/unload port. The criteria for dead loads, live loads and the maximum trolley speed is considered acceptable by the staff.

FW considered accident conditions to include a postulated overturning of the cask, seismic ground accelerations and fire. Table 2.4.4-3 presents a summary of the accident conditions, the MVDS equipment/components directly affected by these accidents and the associated design parameters.

The seismic acceleration loading factors for the handling crane were obtained from the NRC Regulatory Guides 1.60 and 1.61. These acceleration factors along with dead loads, live loads and construction material allowables as identified in Table 2.4.4-3 are considered acceptable to the staff. The seismic acceleration factors along with dead loads, live loads and construction material allowables as identified in Table 2.4.4-3 for the transfer cask trolley are considered acceptable to the staff. The seismic

TABLE 2.4.4-2

DESIGN CRITERIA - OFF-NORMAL OPERATING CONDITIONS

Component	Design Load Type	Design Parameters	Applicable Codes/Regulations	NRC Comments
Transfer Cask Trolley	Transfer cask collides with load/unload port (LUP)	Max. trolley speed: 20 ft/min	N/A	
Primary load-bearing structural members		Trolley wt: 12000 lb	N/A	
Cask restraining clamp system		Loaded cask wt: 48000 lb	N/A	
Drive components				

TABLE 2.4.4-3

DESIGN CRITERIA - ACCIDENT CONDITIONS

Component	Design Load Type	Design Parameters	Applicable Codes/Regulations	NRC Comments
Transfer Cask Trolley	Seismic loading	Maximum loading combination of 3 components: Horizontal acceleration in x and y direction 0.25 g - vertical acceleration 0.17 g	ANSI/ASME NOG-1-1983, Safety Class. Type 1 Reg. Guide 1.60 and 1.61	Acceptable
Primary load-bearing structural members				
Cask restraining clamp system				
Seismic "hooks" on trolley (and pit wall)		Trolley wt: 12000 lb Loaded cask wt: 48000 lb	N/A N/A	
Lateral restraint rollers		Construction material properties	ASTM A 36 ASTM A 320 GR L7	
Locating pin/seismic restraint		Not specified		Design not identified in TR. Must clarify for site-specific application.

TABLE 2.4.4-3 (Continued)

DESIGN CRITERIA - ACCIDENT CONDITIONS

Component	Design Load Type	Design Parameters	Applicable Codes/Regulations	NRC Comments
Transfer Cask Handling Crane	Seismic loading	Combination of 3 components: horizontal acceleration in x and y direction: 0.25g Vertical acceleration: 0.17g Loaded cask wt: 48000 lb. Lifting yoke wt: site specific Crane wt: site specific	ANSI/ASME NOG-1-1983 Safety Class. Type 1 Reg. Guide 1.60 and 1.61	Acceptable
Transfer Cask Load/ Unload Port (LUP)	Seismic loading	Horizontal acceleration in x and y direction: 0.25g Vertical acceleration: 0.17g	NRC Reg. Guides 1.60 and 1.61	Acceptable

loading factors for the load/unload port as identified in Table 2.4.4-3 are considered acceptable to the staff.

2.4.5 Transfer Cask Closure Modifications

The design limits for the standard NLI 1/2 cask closure seals were obtained from the NLI 1/2 cask report and certificate of compliance 9010, based on a maximum ambient design temperature of 54 degrees C with a maximum fuel assembly heat load of 10.63 kw. The maximum heat load for the MVDS cask based on NUREG-3.54 data is only 1.0 kw (1 PWR). A pessimistic radiation-only heat transfer mechanism was assumed to obtain a scaling factor from the cask report data. The scaling factor was utilized to obtain the MVDS NLI 1/2 cask maximum seal temperatures. The staff considers these criteria acceptable.

The maximum internal pressure limits for the standard NLI 1/2 cask should be applicable to the MVDS cask with a modified closure. FW did not provide internal pressure criteria for the standard cask. However, calculations provided in the TR identify maximum pressure limits to prevent lifting of an unbolted closure. The unbolted closure configuration is used inside the TCRB. The check that FW made was to ensure that any internal pressure build up during movement of the cask on the trolley would not result in lifting of the unbolted closure. During cask movement on the transportation trailer outside the MVDS, the modified closure is securely bolted to the TC. For this case, FW determined that the cask internal temperatures and associated internal pressures would result in insignificant loads on the closure bolts and retaining ring.

The gamma source terms for PWR and BWR IFAs are taken from ANS 57.9, Appendix B. Dose rates at various positions on the standard NLI 1/2 cask closure were obtained from the NLI 1/2 cask report and certificate of compliance 9010, based on fuel cooled for 150 days and 120 days respectively for PWR and BWR fuel. Dose rates from the certification report were scaled for comparison with dose rates at similar positions on the MVDS NLI 1/2 cask modified closure, including seal locations, considering a longer fuel cooling time (5 years) for the MVDS condition. The staff considers these criteria acceptable. Table 2.4.5-1 summarizes the criteria for normal operations for the TC lid modifications.

The 3.21 psig pressure is the minimum pressure that would cause the modified cask inner closure for the BWR configuration to lift after the closure is unbolted at the TCRB (the PWR lifting pressure is 4.37 psig). This pressure is correlated to the maximum increase in ambient temperature that can be tolerated at steady state by the NLI 1/2 cask prior to closure removal. This condition is pessimistic due to the requirement to vent the cask prior to unbolting the closures. These criteria are considered acceptable by the staff. Table 2.4.5-2 summarizes the criteria for off-normal operations for the TC lid modifications.

The closure bolts and clamping rings, which form part of the modified NLI 1/2 cask closure configuration, must have an equivalent ability to withstand accidental impacts as the original design. The worst impact scenario considered is a failure of the cask lifting system while the cask is being lifted to a vertical position. The cask would pivot about the lower trunnions and "slap down" on the roadway, causing the cask contents to hit the underside of the closure. The criteria specified for IFA weights, closure-to-IFA clearance and construction material allowables, as identified in Table 2.4.5-3, are acceptable to the staff.

The elastomer seals form part of the modified cask closure configuration. The most severe condition that the modified seal could potentially experience is a fire during transport. The allowable maximum temperature of 200 degrees C is an acceptable criteria for the modified seal configuration.

2.5 PROTECTION AGAINST FIRE AND EXPLOSIONS

The MVDS fire and explosion protection details are deferred to each specific site. However, Foster Wheeler has presented its philosophy on fire and explosion control for the MVDS. In general, FW proposes to:

1. control construction combustible quantities based on the guidance of NFPA Std. 220,

2. install 3 hour rated fire barriers, Class A fire doors, and fire dampers to isolate fire potential areas,

TABLE 2.4.5-1

DESIGN CRITERIA - NORMAL OPERATING CONDITIONS

Component	Design Load Type	Design Parameters	Applicable Codes/Regulations	NRC Comments
Transfer Cask Closure Modifications				
Inner closure seals	Design basis operating temp.	Ambient: max. 54 deg. C, min. -40 deg. C	Reg. Guide 7.8	Acceptable
		Design limit, std. NLI 1/2 cask: 10.62 KW	10 CFR 71	
		IFA output, MVDS cask: PWR 1 KW, BWR 0.27 KW	NUREG 3.54	
	Design basis internal pressure	NLI 1/2 cask specific	10 CFR 71	Acceptable
	Design basis dose rates	Gamma source terms for PWR and BWR IFAs	ANS 57.9 Appen. B	Acceptable
		Dose rates at various locations on the standard NLI 1/2 cask	Transfer cask report and certificate of compliance No. 9010 for model no. NLI 1/2 cask	
Inner closure bolts and retaining ring	Design basis internal pressure	NLI 1/2 cask specific	10 CFR 71	Acceptable
Inner closure shielding provisions	Design basis dose rates	Gamma source terms for PWR and BWR IFAs	ANS 57.9 Appen. B	Acceptable
		Dose rates at various locations on the standard NLI 1/2 cask	Transfer cask report and certification of compliance No. 9010 for model NLI 1/2 cask	

TABLE 2.4.5-2

DESIGN CRITERIA - OFF-NORMAL OPERATING CONDITIONS

Component	Design Load Type	Design Parameters	Applicable Codes/Regulations	NRC Comments
Transfer Cask Closure Modification	Failure to vent transfer cask	Min. press to lift closure plug: 3.21 psig	N/A	Acceptable

TABLE 2.4.5-3

DESIGN CRITERIA - ACCIDENT CONDITIONS

Component	Design Load Type	Design Parameters	Applicable Codes/Regulations	NRC Comments
Transfer Cask Closure Modification				
Closure bolts and clamping rings	Transfer cask pivots and falls allowing IFAs to impact cask closure	PWR wt: 1516 lb	N/A	Acceptable
		1 in. clearance between IFA and cask closure	N/A	
		Allowable bolt stress (ASTM A320): 62.5 ksi	ANSI/ASME NOG-1-1983, Table NOG-4315-1	
		Clamping ring material allowables	ASTM A36	
Closure seals	Fire during transport	Max. design basis temp: 200 deg. C	N/A	Acceptable

3. provide for egress stairway fire barriers and manual fire fighting access, and

4. control flame spread, smoke development, and fuel contribution rating to 25 or less as defined in NFPA Std. 255.

In addition, FW proposes to provide fire detection features per NFPA Standard 72D and Fire Suppression systems per the guidance of ANSI/NFPA 10-1981, ANSI/NFPA 12-1980, ANSI/NFPA 12A-1980, and ANSI/NFPA 12B-1980.

The staff finds the philosophy presented in the FW TR Sections 3.3.6 and 4.3.8 to be generally acceptable. Fire protection system details and administrative control procedures have not been presented but are deferred to each site-specific application. The NRC staff must review each site for fire protection system details including: administrative procedures to minimize combustible inventories, a review of each fire hazard area focusing on details such as the placement of fire rated doors, cable sealants, fire detection features and fire suppression implementation details. The truck unloading facility should be treated as a fire hazard area and accidents caused by track movement and truck fuel spills should be addressed. In addition, each applicant should discuss explosion potentials and structural strength to contain or accommodate explosions.

2.6 CONFINEMENT BARRIERS AND SYSTEMS

Pursuant to 10 CFR 72.72(h), the FW MVDS design must protect the fuel cladding against degradation and gross rupture. This section of 10 CFR 72.72 also requires that a ventilation and off-gas system be provided where necessary to ensure confinement of airborne radioactive particulate matter during normal and off-normal conditions.

The two ventilation and off-gas systems included in the MVDS design are the cover gas maintenance system for the SSTs and the ventilation and off-gas system for the MVDS facility. An elastomeric O-ring is used as a confinement barrier for the SST.

The general design criteria for the two systems are given in the following sections of this SER. However the acceptance criteria and a more

detailed discussion of the design for these individual components and systems are deferred to Chapter 5 of this SER.

2.6.1 Cover Gas Maintenance System

The ambient temperature limits for the gas services system were obtained from the NRC Regulatory Guide 7.8.

The gas services system criteria for off-normal conditions such as SST vacuum leakage, nitrogen system leakage and HEPA filter leakage as specified in Tables 5.3.3-1, 5.3.3-2 and 5.3.3-3 of this SER are acceptable to the staff.

The seismic acceleration factors for the gas services system components and piping as identified in Table 5.3.3-3 of this SER were obtained from NRC Reg. Guides 1.60 and 1.61. These criteria are considered acceptable to the staff.

In the event of a failure of the nitrogen, system relief valve which is set at 3.25 plus or minus 0.25 psig, a bursting disc is incorporated in the system to limit the maximum system pressure to 5 plus or minus 0.25 psig. The bursting disc is sized to prevent lifting of the SST shield plug (8.5 psig-BWR shield plug configuration). This bursting disc setting is acceptable to the staff.

In the event of a tornado, the gas services system HEPA filters are designed to withstand a differential pressure of 3 psig at a maximum pressure drop of 2 psi/sec. These criteria were obtained from NRC Reg. Guide 1.76 and are considered acceptable by the staff. The FHM depression system HEPA filter differential pressure limits are identical to the gas services system criteria.

The NRC staff has evaluated the general criteria as stated in the FW TR and finds them acceptable.

2.6.2 Ventilation and Off-Gas System

The MVDS facility's ventilation and off-gas system for normal operating conditions is designed to be in compliance with 10 CFR 20 and 10 CFR 72 requirements, specifically: 10 CFR 20.108, "Exposure of Individuals to Concentrations of Radioactive Materials in Air in Restrained Areas;" 10 CFR 20.106, "Radioactivity in Effluents to Unrestricted Areas;" and 10 CFR 72.72(h)(3), "Ventilation and Off-Gas Systems shall be Provided Where Necessary to Ensure the Confinement of Airborne Radioactive Particulate Materials During Normal or Off-Normal Conditions."

The TR states that the MVDS facility's ventilation and off-gas system design criteria for off-normal operating conditions are the same as stated for normal operating conditions.

FW has not identified any specific criteria for accident conditions.

2.7 INSTRUMENTATION AND CONTROL SYSTEMS

Paragraph 72.74 of 10 CFR requires the provision of (1) protection systems for radiation exposure control; (2) radiological alarm systems; (3) systems for monitoring effluents and direct radiation; and (4) systems to control the release of radioactive materials in effluents.

Installed radiation monitors are provided to warn of increased radiation levels in the MVDS, and a monitor is also provided to measure radioactivity at the outlet of the grouped ventilation system prior to discharge up the ventilation stack. Temperature monitoring probes provide confirmatory data on the performance of the vault module cooling system, and the gas services system is instrumented to supply and maintain the cover gas.

The staff takes the position that the instrumentation and control systems of the generic MVDS are adequate to meet the requirements of 10 CFR 72 provided they are properly installed, calibrated, maintained and provided they are operated whenever fuel is handled or transferred. The operational details of the generic design can be deferred to a site-specific application.

2.8 CRITERIA FOR NUCLEAR CRITICALITY SAFETY

Part 72.73 of 10 CFR 72 requires that spent fuel handling, transfer and storage systems be designed to be maintained in a subcritical configuration. The design safety margins should reflect design uncertainties including uncertainties in handling, transfer, and storage conditions, data and methods used in calculations, and adverse accident environments. Part 72.73 also requires that the design be based on either favorable geometry or permanently fixed neutron absorbing materials. Section 3.3.4 of the TR addresses nuclear criticality safety. The criticality analysis is reviewed in Chapter 7 of this SER.

The acceptance criteria for nuclear criticality safety established in the present review was an effective multiplication factor, k-effective, of 0.95. Although multiplication factors are typically reported with a 95% confidence level (2 sigma), the TR establishes a 99% confidence level (3 sigma) for the criticality results. Thus, an additional margin of safety is embedded in the nuclear criticality safety analysis above what would be considered an acceptable design. The staff concludes that the FW design meets the requirements for maintaining subcriticality as defined in Part 72.73 of 10 CFR.

2.9 CRITERIA FOR RADIOLOGICAL PROTECTION

Parts 72.15, 72.67(a), and 72.68(b) of 10 CFR require the licensee to provide the means for controlling and limiting occupational radiation exposures within the limits given in 10 CFR 20, for limiting the annual dose equivalent to any individual beyond the controlled area, and for meeting the objective of maintaining exposures as low as reasonably achievable (ALARA). Part 72.74 of 10 CFR requires the provision of (1) protection systems for radiation exposure control; (2) radiological alarm systems; (3) systems for monitoring effluents and direct radiation; and (4) systems to control the release of radioactive materials in effluents.

Part 20.101(a) of 10 CFR states that any individual in a restricted area shall not receive a total occupational dose in excess of 1.25 rems to the whole body from radioactive material and other sources of radiation in any period of one calendar quarter. Part 20.101(b) states that, under

certain conditions, the quarterly dose limit to the whole body is 3 rems in any calendar quarter.

Guidance for ALARA considerations is also provided in NRC Regulatory Guides 8.8 and 8.10.

The radiological protection design features of the MVDS are described in Chapter 7 of the TR. These features include (1) access control; (2) radiation shielding; (3) positioning those operation mechanisms which may require maintenance outside the shielding envelope; and (4) proper ventilation systems for containment of radioactive materials. Access to the site of the MVDS installation, although not specifically addressed in the TR, would be restricted by a periphery fence to comply with 10 CFR 72 restricted area requirements. The details of the access control features are site-specific, and would be described in the applicant's site license application.

Radiation protection for on-site personnel is considered acceptable if it can be shown that the non-site-specific considerations for maintaining occupational radiation exposures: (1) are at levels as low as reasonably achievable, (2) are in compliance with appropriate guidance and/or regulations, and (3) that the dose from associated activities to any individual does not exceed the limits of 10 CFR 20.

Off-site radiological protection features of the MVDS system are deemed acceptable if it can be shown that design and operational considerations which are not site-specific result in off-site dose consequences which are in compliance with the applicable sections of 10 CFR 72, and that these doses to off-site individuals are as low as reasonably achievable.

Based on analyses presented in the TR, the staff concludes that the MVDS meets the requirements for on-site and off-site radiological protection, including incorporation of ALARA principles.

2.10 CRITERIA FOR SPENT FUEL AND RADIOACTIVE WASTE STORAGE AND HANDLING

Pursuant to 10 CFR 72.75, the licensee is required to design the spent fuel and radioactive waste storage systems to ensure adequate safety under

normal and accident conditions. These systems must be designed with (1) a capability to test and monitor components important to safety; (2) suitable shielding for radiation protection under normal and accident conditions; (3) confinement structures and systems; (4) a heat removal capability having testability and reliability consistent with its importance to safety; and (5) means to minimize the quantity of radioactive waste generated.

Criteria covering items (1) through (4) above have been addressed in this SER in the preceding sections of this chapter. The TR states that both solid and liquid waste quantities will be minimal. Solid wastes are limited to small size filters and general "housekeeping" materials such as rags, swabs, vacuum cleaner bags, etc. Liquid wastes will consist mainly of small amounts of liquid resulting from decontamination activities. Minimal radioactive wastes requiring treatment are generated during the storage period during either normal operating or accident conditions.

Any other criteria for waste handling and treatment are deferred to site-specific applications.

The staff agrees that the design of MVDS provides for minimal generation of radioactive wastes.

2.11 CRITERIA FOR DECOMMISSIONING

Part 72.76 of 10 CFR provides criteria for decommissioning. It requires that considerations for decommissioning be included in the design of an ISFSI, and that provisions be incorporated to (1) decontaminate structures and equipment; (2) minimize the quantity of waste and contaminated equipment; and (3) facilitate removal of radioactive waste and contaminated materials at the time of decommissioning.

Part 72.18 of 10 CFR defines the need for a decommissioning plan, including financing. Such a plan, however, is only appropriate to a site-specific situation, and 10 CFR 72.18 is therefore not considered applicable to this review.

The MVDS TR claims that it has recognized the need to decommission the facility at the end of its life by providing access, ease of decontamina-

tion, services, disposal of radioactive wastes, etc. The TR also claims that, once the fuel and radioactive wastes have been removed, the majority of the MVDS could safely be demolished by conventional means.

Some equipment (e.g., SSTs, FHM internals, etc.) would require decontamination to safe levels before packaging for disposal. Contaminated components of the FHM will have weights in excess of the 3 ton Charge Hall monorail capacity, requiring the use of temporary enclosure, ground cover, and steelwork in a procedure which is essentially the reverse of the equipment erection procedure.

To facilitate decommissioning, the design should be such that:

(1) there is no credible chain of events which would result in widespread contamination outside of the confinement envelope; and

(2) contamination of the external surfaces of the TC and FHM will be maintained below the following surface contamination limits:

Beta-gamma emitters:	10E-4 uCi/sq. cm
Alpha emitters:	10E-5 uCi/sq. cm

A detailed decommissioning plan, which would consider such factors as decommissioning options available, likely further use of the site, environmental impact, and available waste transportation and disposal capabilities, would be developed on a site-specific basis.

The staff concludes that adequate attention has been paid to decommissioning in the design of the MVDS, considering the current state of knowledge.

REFERENCES

1. U.S. Government, "Licensing Requirements for the Storage of Spent Fuel in an Independent Spent Fuel Storage Installation," Title 10 Code of Federal Regulations, Part 72, Office of the Federal Register, Washington, D.C., (1987).

2. Foster Wheeler Energy Applications Inc., "Topical Report for the Foster Wheeler Modular Vault Dry Store for Irradiated Nuclear Fuel," EA 86/20 Revision 1, October, 1987.

3. ANSI/ANS 57.9-1984, "Design Criteria for an Independent Spent Fuel Storage Installation (Dry Storage Type)."

4. ANSI/ASME NOG-1, 1983, "Rules for Construction of Overhead and Gantry Cranes (Top Running Bridge, Multiple Girder)."

3.0 STRUCTURAL AND MECHANICAL EVALUATION

This chapter discusses in detail all aspects of the structural and mechanical evaluation of the FW MVDS system. To give an overview of the results, a brief summary is provided. As discussed in Section 2.4, the design criteria are an integral part of the structural and mechanical evaluation because 10 CFR 72.72 does not explicitly state what criteria must be used. The staff summary and conclusions are therefore presented in terms of: (1) criteria suitability and any restricting conditions as they might apply to an applicant, and also (2) the degree to which the FW MVDS ISFSI design satisfies the criteria and any restricting conditions.

The FW TR does not present construction drawings and specifications. However, the TR includes design analyses which include structural detailing, component and equipment size selection, and discussion of design approach which provide sufficient design definition to permit review and evaluation. The remainder of the structure above the foundations, except where determined otherwise by the evaluation, could be readily detailed following routine engineering practice, based on the details which are included.

There are five basic structural and mechanical systems which are reviewed in this chapter. They are the civil structure, the shielded storage tubes, the fuel handling machine, the transfer cask reception bay equipment and the transfer cask lid modification. Other systems important to safety as defined by the FW TR, i.e., the SST O-ring cover, gas maintenance system, and the ventilation and off-gas system are covered in Chapter 5.

3.1 SUMMARY AND CONCLUSIONS

This review has included an evaluation of all structural and mechanical design criteria, analysis methodologies, material specifications, allowable stress levels and structural analyses. The staff has reviewed the complete design of the FW MVDS system proposed by Foster Wheeler Energy Applications and confirms that it is in compliance with 10 CFR 72.72 with the exceptions outlined below.

The staff has reviewed all the principal design criteria proposed by FW for general applicability to the MVDS system and has confirmed that these criteria are in compliance with 10 CFR 72.72 with the following exceptions:

1. ACI-216-R-81 for concrete temperatures is not acceptable (Ref. Table 1.2.2-4 of TR). The NRC staff accepts ACI-349-80 as criteria for concrete temperatures.

2. ASME B&PV Code Section VIII Division 1 is not acceptable for design criteria for the IFA drop accident case for the SST because it does not provide for large plastic deformation. ASME Section III Division 1, Service Level D is acceptable to the NRC staff.

3. ANSI/ASME NOG-1, 1983 contains impact criteria to be used in calculating impact loads due to possible off-normal operation of the overhead and monorail crane operation. FW has not used these criteria in their preliminary design. They still need to be completed.

The staff has reviewed the analysis methodologies used by FW in preparing their preliminary design for the MVDS and found them to be acceptable with the following exceptions:

1. The FW methodology for analyzing the alternative energy absorbing element positioned between the SST base and the SST support stool is not acceptable because there is no experimental data to verify the methodology. However, the methodology for analysis of the primary design element, i.e., the HEXCEL element is acceptable.

2. The FW methodology presented for analyzing the SST base casting is not acceptable because it is based on flat plate theory. The SST base casting cannot be considered as a flat plate by any traditionally accepted assumptions.

3. The NRC staff considers the three-piece clamping system design for securing the transfer cask to the TC trolley to be a potential "weak link" in the safe handling of the IFA during transfer

operations. The staff suggests that this portion of the design be given additional emphasis for a site-specific application.

The staff has reviewed the material specifications and allowable stress levels used by FW in preparing their preliminary design and confirmed that the data are in compliance with 10 CFR 72.72 with the following exceptions:

1. The three ton monorail crane rail is inadequately supported. Redesign is recommended.

2. The reinforced concrete and walls and floors of MVDS storage cells are inadequately designed for thermal-induced moment. Further analysis and redesign as appropriate are recommended.

3. The precast concrete collimaters have not been designed or analyzed for dead and potential other loads. Further analysis is recommended.

4. The foundation design of the cask reception bay is not identified as being only illustrative but it is linked to an illustrative set of soil conditions. Inclusion of the cask reception bay foundation design as well as the basic structure foundation design in any site-specific design, regardless of apparent match of actual soils to an assumed soil condition, is recommended.

5. There are components important to safety of the MVDS for which structural details and design analysis were not submitted. Submission of designs and design analyses for the following components is recommended: stair tower in the cask reception bay structure; cantilevered reinforced concrete over the cooling air inlet duct and the supporting exterior walls and columns; floors, stairs, and structural walls in the administrative, electrical, and mechanical areas; elevated walks in the transfer cask preparation and administrative areas; emergency exits; and impact loads caused by possible off-normal operation of the overhead and monorail crane.

6. All FW stress analysis for the MVDS is based on preliminary design data including the selection of materials. For each of the components of the MVDS for the final design, FW will need to select a material from among those proposed as possible materials and compare the stresses as determined in the final design with the allowable stresses for the selected material. There are some materials which FW has selected and therefore constitute a final specification. A partial listing of these materials include:

MATERIAL	APPLICATION
HOLOKROME cap screws	FHM
SA 333 grade 1	SST
VITON E60 C	SST seal
HEXCELL SS Honeycomb	SST shock absorber
Jabroc	FHM shield
Goodyear SCL-34 clamps	FHMC
SKF GE 80T ball joints	FHMC

7. The stress levels in the SST associated with the accident case of the IFA drop in the SST exceed the allowables of ASME B&PV Section VIII Division 1. Thus, the FW design does not meet their criteria. The NRC staff has concluded that an acceptable criteria which would accommodate the current FW preliminary design would be the ASME B&PV Section III Division 1, if Service Level D were cited. Service Level D permits gross general deformations, with some consequent loss of dimensional stability and damage requiring repair. Recovery procedures following the drop of an IFA into the SST or the drop of the SST plug into the SST would require the removal of any damaged components from further service.

8. The stress level in the SST base casting associated with the IFA drop accident has not been adequately determined in the TR. The current analysis is based on an unsatisfactory methodology. The staff can accept the preliminary design provided an Finite Element Method (FEM) analysis shows that this part meets Service Level D of Section III of the Code.

9. The TR did not submit any preliminary drawings or analyses for the seismic restraint system mounted to the civil structure for the purpose of engaging the transfer cask trolley at the LUP. While the staff concurs that such a system is feasible, details would need to be submitted for a site-specific application.

10. The stress level in the outer load frame of the IFA grabhead exceeds the allowable stress for the material. The NRC staff finds that not only was an incorrect cross-sectional area used in the FW calculation but also an incorrect stress allowable was used. The staff concurs that, in principle, this component can be designed and analyzed such that it meets the requirements of Section 5000 of the NOG-1-1983 criteria. The staff can accept the preliminary design subject to reanalysis and or change of material specification.

11. The stress level in the IFA grabhead jaws does not meet the requirements of NOG-5474. The NRC staff can accept the preliminary design provided that additional analyses are performed and/or a stronger material is specified.

3.2 DESCRIPTION OF REVIEW

This chapter evaluates the structural response of the MVDS system to loads due to normal operating conditions, off-normal conditions, accident conditions, and loads due to environmental conditions and natural phenomena. The review procedure discusses the assumed loads, the material properties, and the ASME or ACI code allowable stress limits. The review provides an evaluation of the preliminary design analyses which FW supplied in the TR for each of the components and systems important to safety.

This TR review is based on a preliminary design and incomplete design calculations. As FW states on p. A5-5-10, "It is not viable, commercially, to produce final detailed manufacturing drawings for the TR." However its contention is that the design is conservative and therefore will not change appreciably in any way should they proceed with a final design. To the extent that this is true, the NRC staff review is complete. To the extent that FW may need to change its design, the NRC staff review is incomplete.

In order to remove this potential deficiency in the review process, FW does have a mechanism in place for accomplishing the required analyses and completing the manufacturing drawings. FW has an NRC-approved QA program which will be used during the generation of the manufacturing drawings and mandatory calculations.

However in order to grant a site-specific license application to a utility to possess and store spent fuel in the FW MVDS, the NRC may need to review any safety-related components, sub-assemblies, assemblies, or systems which have changed between the review of the TR and the site-specific application. In this case the NRC staff will be reviewing final manufacturing drawings and the final design analyses.

The FW outline for completing the final analyses and drawings includes:

1. confirmatory weight and center of gravity calculations based on actual final shop drawings,

2. mandatory design code calculations and all other required calculations necessary to ensure safety standards will be undertaken and reviewed against manufacturing details as a part of the site-specific safety review, and

3. specifications for materials, manufacturing procedures, inspection, assembly and test, including those for site commissioning, operation and maintenance will be provided for each component, sub assembly, assembly, system and for the complete unit build.

Specifications will incorporate: a) requirements established in the TR appendices as important to safety, b) specific requirements of the Topical Report Design and c) the requirements of the various design codes cited in the TR as criteria such as ANSI/ASME NOG-1-1983, and ASME B&PV Code Section VIII for mechanical items and ANSI 57.9-1984 and ACI-349-80 for the civil structure. Components not covered by these codes will be subject to the requirements of the recognized industry standards.

3.2.1 Applicable Parts of 10 CFR 72

10 CFR 72 states the basic regulations establishing the requirements, procedures, and criteria for the issuance of licenses to possess power reactor spent fuel and other radioactive materials associated with spent fuel storage, in an independent spent fuel storage installation. The FW TR presents a design for an MVDS for approval which could be subsequently referenced or attached to an application for construction of an ISFSI at a specific site. NRC approval of the FW MVDS design could permit the subsequent application to address the site-specific elements of the design, procedures, and organization. NRC review could then be directed to the site-specific elements and any areas covered by the TR which did not receive unconditional approval (e.g., where NRC approval of the TR was conditioned by requirements for redesign, further analysis, or further definition).

The parts of 10 CFR 72 which are applicable to the review of the MVDS ISFSI are: 72.72(a) which deals with quality standards; 72.72(b) which requires that structures important to safety be protected against environmental conditions and natural phenomena, as well as appropriate combinations of effects including accident conditions; 72.72(c) which requires protection against fire and explosions; 72.72(f) which requires design to permit inspection, maintenance and testing; 72.72(g) which requires design for emergencies; and 72.72(h) which requires protection of the fuel cladding against degradation and gross rupture.

3.2.2 Review Procedure

The TR was reviewed for compliance with the applicable parts of 10 CFR 72 as outlined above. The review was performed in stages. The stages addressed: the stated sources of requirements and the criteria stated as constituting the basis for the design (reviewed and evaluated at Chapter 2), the structural evaluation of the actual design against the stated and other appropriate criteria (this chapter), and in other evaluations (Chapters 4 through 13).

The structural and mechanical systems comprising the MVDS ISFSI include the civil structure, the shielded storage tubes with plugs, the fuel handling machine with bridge, the transfer cask receiving bay with

equipment, and the transfer cask lid modifications. These systems have been defined by FW as important to safety in Table 3.3-1 of the TR. All phases of normal operating conditions, exposure to natural phenomena, and accident conditions result in loading conditions for the individual components in the systems. The NRC staff evaluated all analyses for all components which FW submitted in the TR. All calculations in all appendices, non-proprietary as well as proprietary were reviewed by the NRC staff. The inert cover gas maintenance system and the ventilation and off-gas system and the O-ring seal for the SST are also important to safety, and they are discussed in Chapter 5, which deals with confinement barriers.

3.2.2.1 Design Descriptions

A brief description of the MVDS ISFSI was given in the first chapter of this report. A more detailed description of the design is given in this chapter which highlights aspects of the design that are important to the structural and mechanical evaluation.

Civil Structure

The FW TR structural design was evaluated against normal, off-normal, and accident conditions and events, as developed by FW, and as reviewed in Section 2.4 of this report. The basic evaluation parameter used was typically whether stresses resulting from the combinations of loads of the various conditions and events would be acceptable under the applicable criteria. In some cases, where the design criteria stated by FW TR are not considered appropriate or were omitted (as evaluated at Chapter 2), the actual designs were evaluated against criteria which do apply.

Concrete Structure

The basic vault module unit (which includes the transfer cask reception bay, mechanical systems, and administrative facilities) and the extension vault modules are primarily monolithic massive reinforced concrete structures. The only provision for expansion, contraction, or differential movement due to settlement differences, etc. are at the interfaces between the vault module structures. Different, illustrative, foundation designs are included in the TR but are not submitted for final approval as these

would be site-specific. The structure above the foundation is supported by massive reinforced concrete bearing walls. The design, above the junction of these walls and the foundation, is not site-specific and is covered in the request for NRC certification.

The SSTs are installed in arrays within vaults. The number of storage tubes per vault is dependent on the configuration of fuel rod used at the specific reactor supported. The major axis of the rectangular vaults is perpendicular to the longitudinal axis of the basic and extension vaults. At the top of the vault is a charge face structure which provides lateral support to the SSTs, holds the gas service piping, and supports overhead protective slabs. The charge face structure is supported and longitudinal radiation shielding is provided by lateral massive reinforced concrete walls adjacent to and between the vaults.

Air flow is through an air passage from the front of the building into a duct which passes over a reinforced concrete radiation barrier wall and then back down to the level of the vault. Air passes among the SSTs and then out through a stack which rises at the back side of the building. These stacks are structurally integrated with each other and with other building elements to form a reinforced concrete partial back wall of the building.

The longitudinal walls below and above the charge hall floor level are integrated with the concrete floor itself to form open box cantilever sections to bridge adjacent vault module structures. The design submitted only provides for the addition of extension vault module structures from one end of the basic vault module unit (away from the transfer cask handling end). At the permanent end of the basic vault module unit a closed box structure is used above and below the charge hall floor level to provide support for that portion of the building which is cantilevered beyond the foundation.

Reinforced concrete extends eleven feet above the level of the charge hall floor (30 feet above ground level) to provide adequate protection against DBT missiles. At the end adjacent to the site of a future extension vault module, a temporary eleven foot high concrete wall is emplaced within

the sides and floor of the cantilever box. This would be removed upon installation of a further vault module extension.

The concrete which surrounds the vault module below the level of the charge hall floor is principally sized for radiation shielding. This provides protection for personnel who may routinely occupy administrative spaces within the structure and personnel who may be in the charge hall during fuel rod transfer to or from the SSTs. The charge hall floor is sized to meet the structural requirements of the cantilevered sections and support for the fuel handling machine. The fuel handling machine is designed to provide full, all-around radiation shielding for fuel rods while they are being transferred or placed by the machine. This includes shielding below the FHM, such that the floors are not required to provide shielding to occupied space below areas where the FHM may pass or be positioned.

Above the charge hall floor level the concrete walls are sized to prevent penetration by DBT missiles and to provide support for the enclosing steel structure and the DBT forces which may be transmitted from that structure. The back wall is partially formed by a concrete structure above the eleven foot protective wall level. This consists of the reinforced concrete stacks extending to roofed exhaust ports. Each vault has its dedicated stack. The stack is designed to minimize radiation transmission and to preclude potential DBT missiles from entering through the stack with sufficient energy to disrupt the SSTs. Each stack has a reinforced concrete roof supported on columns and a divider wall between the flues for each vault.

The reinforced concrete is typically 5,000 psi strength and the reinforcing steel is 50,000 psi yield strength.

Steel Structure

The vault module structures are enclosed on three sides and the ends of the fourth side, above the level of the reinforced concrete (RC) DBT missile-shielding wall by a steel framed and sheathed industrial type building. The sheathing is supported by girts on columns anchored to the top of the front and rear DBT barrier RC walls, and by purlins on trusses held by the columns

or the RC stack structure at the back wall. The columns are tied and braced in the planes of the front and rear walls and roof trusses are braced and tied in the roof plane. The end walls are supported on the DBT missile barrier RC walls, the end roof trusses, and the adjacent corner columns. With the exception of the permanent end wall at the transfer cask reception bay end of the basic module, the end walls are designed to facilitate their removal upon installation of successive extension vault modules.

The principal lateral resistance to live loads is provided by the reinforced concrete stack structure of each vault module, which is centrally located on the back face. The steel structure with columns and walls provides the remainder of the back face not occupied by the stack structure. Lateral forces on the structure to either side of the RC stack structure are transferred to it by the integration of the roof trusses in their plane by purlins and cross ties. The permanent and temporary gable end walls are not designed as shear walls to provide the principal resistance to lateral horizontal forces associated with the DBT and design earthquake.

The wall and roof sheathing is deformed sheet steel panels. The section and the attachment system are selected to withstand the maximum positive and negative pressures associated with the design basis tornado. It is not expected that the sheathing will prevent the penetration of potential tornado-borne missiles, however the structural design provides that only local failure would result if a structural member were struck by any of those missiles projected to occur above the RC barrier wall.

The steel to be used in the enclosure structure has a design yield stress of 60,000 psi.

Charge Face Structure

Each dry storage vault consists of SSTs which are to hold individual fuel rod assemblies. The SSTs are supported at their bases by a reinforced concrete slab which is integral to the concrete structure. Lateral positioning support is provided by the charge face structure (CFS). The CFS also provides radiation shielding, slab support stools which in turn support steel shielding slabs over each SST, and the layout of piping used to provide the inert gas cover for the IFAs in the SSTs.

A charge face structure is a composite of steel and concrete. The structure is designed as a one-way slab which spans the width of the rectangular vault. The principal structural elements are the steel plate enclosure and the steel tubes running through the structure and welded at the top and bottom plates which provide for the installation of SSTs. These tubes provide the shear capacity necessary to integrate the top and bottom plates to act as flanges of a steel beam.

The CFS is filled with concrete which provides further stiffening of the cross tubes and thereby of the structure. As the concrete may not form a good bond with the steel plate (especially at the top plate) it is not considered that the CFS is a true composite section. Concrete filling of the CFS is accomplished away from its final location. The CFS is to be transferred into final position after its completion.

The charge face structure is 30 inches deep including the top and bottom 1-1/2 inch thick steel plates. It has horizontal dimensions of 132.75 by 269 inches. The steel plate to be used in the charge face structure is to have a 60,000 psi design yield strength. The liner tubes to be installed vary in number and size with the design of the IFA. The BWR tubes are 10.5 inches in mouth diameter and 9.36 inches in inner diameter. The PWR tubes are 14.5 inches in mouth diameter and 13.39 inches in inner diameter. Steel slab support welding to the top face of the structure will support steel shielding slabs which are 2-3/4 inches thick.

Interfaces

The principal civil structure interfaces of concern are those associated with integration of the separate vault module structures. Interfaces are necessary to provide for the operation of the fuel handling machine on its rails between the basic unit (where fuel rod assemblies are loaded or downloaded at the transfer cask handling area) and the individual vaults. The number of vault modules which may be serially connected is limited only by the site constraints. Due to the nature of the need, adjacent vault modules may not be built concurrently.

Interfaces between the vault module structures must provide for continuity in the enclosing structure, mechanical and electrical services

from the basic structure, and continuous support for the fuel handling machine track. The principal problems which must be addressed by the interface designs are the potential relative movement between the vault module structures during earthquakes or response to the design basis tornado, and differential settlements resulting from natural variations in soil response and variations in soil settlement rates with time for structures built at different times. Relative displacements may be vertical, lateral, longitudinal, or rotational about any of these axes.

Potential relative movement between adjacent structures is provided for in the steel enclosing structures by connecting members between structurally independent steel frames which by their means of attachment permit relative movement between those frames without the imposition of forces due to that relative displacement. Simple span connecting members with slotted bolt holes are used as the principal means of providing this type of connection between the steel trusses. Continuity in the sheathing is provided by flexible membranes.

Below the steel enclosing structure, adjacent reinforced concrete structures are separated by a joint permitting the design potential relative movement. This joint is stepped but the design does not provide for either structure to assume forces transferred from the other.

Relative movement affecting the rail is provided by a vertical plane, diagonal joint and replaceable shim plates at the joint between structures. Gas piping continuity is provided at the interface by bellows connecting lengths of pipes. Electrical wiring and conduit have a natural flexibility which is enhanced by additional joints and design of the alignment.

The design provides for differential settlements of plus or minus 1/2 inch between adjacent vault modules. Relative movement of up to one inch is provided in the adjacent RC walls up to the 30 foot level. Six inches of relative movement of the steel enclosure is provided by the slotted holes and flexible waterproof connections.

Shielded Storage Tube

As outlined in Chapter 4 of the TR, the SST consists of four sections: top ring, body, base and azimuthal and lateral location restraint feature which is fixed inside the body. Dimensions for specific PWR or BWR fuel will be determined by a site-specific license application. The SST is a welded carbon steel tube with cast steel top and base sections welded to the tube. The TR states that circumferential butt welds will be radiographed and inspected according to Section VIII, Division I of the ASME Code. Other welds will be inspected by dye penetrant or magnetic particle techniques. The NRC staff recommends that the SST welds be inspected in accordance with Section III of the Code, since the SST design does not meet with the requirements of Section VIII.

The SST rests on a shock absorber designed to limit the impact load into the floor of the VM in the event of an IFA drop accident. The shock absorber transmits the entire impact load to the SST support tool, which in turn transmits the entire impact load to the VM floor.

The SST shield plug fits into and is supported by the top land of the SST. It is machined from carbon steel with a controlled clearance and step to reduce radiation streaming. The upper section of the plug has two machined grooves to locate the elastomeric O-ring seals made from the Dupont VITON material. A connection to a service point is situated between the two grooves. The upper seal is part of the confinement boundary which prevents leakage from the interior of the SST to the sub Charge Face Slab region. The lower seal prevents leakage from the interior of the SST to the service point. A sintered metal filter is fitted to the bottom of the plug with connections to the service point. The filter has 100% efficiency for 1.5 micron particle size and 98% efficiency at the .06 micron particle size. Because the filter is located above the source of radio-active particulates, a gas velocity would be necessary to drive any particulate upward.

The SST O-ring seal design is discussed in Chapter 5 because the seal forms a portion of the confinement barrier which is not subject to design criteria of traditional codes such as the ASME, ANSI, or ACI.

The SST support stool locates and supports the base of the SST on the Vault Floor, and transmits loads into the building foundation. Drain holes are drilled to prevent accumulation of water, and the steel castings are flame sprayed with aluminum to prevent corrosion.

Fuel Handling Machine and Its Bridge and Trolley

Chapter 5 and Appendix A5.5 of the TR provide the functional description and supporting preliminary design calculations and drawings for the FHM. FW has chosen the NOG-1-1983 Code to govern the design of the two basic units, i.e., the fuel handling machine and the fuel handling machine bridge and trolley. The reference design is for PWR type fuel, however some preliminary calculations have also been supplied in the TR to show the types of changes which would be necessary for BWR fuel should a final design be completed. Examples of basic differences between PWR and BWR FHM are: bore cavity in the IFA chamber, size and capacity of the Type I IFA hoist chains and drive sprockets, grabhead envelope, and load sensing trip points. The bridge and trolley however are not subject to variations, so the fact that FW selected the PWR fuel is acceptable since it envelopes the BWR with regard to weight and size.

At the outset of Appendix A.5-5 FW states that due to economic reasons, it has prepared a preliminary design rather than a final design for the entire MVDS project. The calculations which FW has supplied in the TR represent what it expects to be worst case loading conditions, which if true, would mean that FW will not have to make changes to components important to safety in going from the preliminary design to the final site-specific design. Regardless of any changes which may or may not be required in developing a final design, FW will need to complete many calculations in order to comply with the requirements of NOG-1-1983. The NRC staff has elaborated on some of these additional required calculations in Section 3.3.4.2.

The FHM top running bridge crane has eight basic subdivisions. Each area will be described briefly.

1. The trolley and drive wheels will be designed according to NOG-4000, NOG-5000 and NOG-6000 for the structural, mechanical and

electrical aspects respectively. The FHMC trolley supports the FHM and enables the FHM to traverse the width of the charge face. It consists of two welded steel box sections which transfer the load to the trolley wheels. These side sections are connected at each end by a load girt which supports the mounting face for the ball bearing slewing ring upon which the FHM upper assembly is supported.

2. The bridge and drive wheels will be designed to the standards specified by NOG-4000, NOG-5000 and NOG-6000. It has two welded steel box girders which span the width of the charge face. They are rigidly connected by welded steel box section end ties which carry the mountings for the travel wheel trucks. The girders carry the rails upon which the trolley travels. The vault module supports larger section rails which the bridge traverses.

3. The positional clamping and seismic restraint clamps are used during IFA handling operations to prevent movement of the FHM relative to the Vault Module and to provide seismic restraint. These units are commercial units designed with passive spring actuators and active hydraulic release mechanisms. Thus the system has fail safe integrity.

4. The FHM upper assembly support structure provides the primary support for the FHM. It consists of a turn table and a ball bearing slewing ring.

5. The FHM base anti-rotation and seismic restraints system complements the upper assembly. The upper ball bearing assembly takes out normal vertical loads of the FHM assembly, upper support structure, and the FHM base, whereas the lower FHM base support bearing takes out moments and horizontal seismic loads. The anti-rotation feature consists of a guide rail fixed to the bridge girder and guide rollers attached to the FHM base.

6. The FHM upper assembly rotation drive is effected by a drive motor with combined disc brake.

7. The FHM electrical and operating equipment is mounted on the trolley. It includes electrical systems control panels, operating cabin, depression system, and slab removal and SST conditioning equipment. The operating cabin has radiation protection provided by a shielding wall consisting of two-inch thick steel plates separated by six inch thick vertical steel beams. Shielding material is inserted in the space created by the two steel plates. The depression system is designed to ASME N509-1980 standards.

8. Personnel access provisions are provided by foot walls and ladders which comply with OSHA requirements.

The FHM upper assembly consists of six areas which are briefly described below:

1. The FHM upper assembly is manufactured from cast iron necessary for gamma shielding. The structural sections will be machined, and surfaces coming in contact with IFAs will be machined to 63 micro inches in order to reduce particulate build-up.

2. Fast neutron shielding is provided by use of Jabroc, a proprietary material. The density of Jabroc is the only property supplied in the TR. The manufacturer of this material as well as its shielding properties should be provided in a site-specific application.

3. The fuel handling cavity is designed to provide for safe handling of IFAs within the MVDS. The IFA hoist system is composed of a hoist drive, a grabhead and a chain designed in accordance with NOG-1-1983. The hoist drive, chain and the IFA grab, which corresponds to a crane hook in a conventional crane design are designed to NOG-5000 Type I requirements. Thus the failure of a single component will not result in the loss of the IFA load under any plausible accident condition. Mechanical elements which form the direct load path were analyzed by FW.

4. The FHM shield plug cavity is a thick wall steel tube housed in the FHM upper assembly. Its purpose is to house the shield plug

grab and either an SST or a LUP shield plug. The hoist system for raising the shield plug is designed to NOG-1-1983 Type II standards.

5. The FHM nose unit sleeve cavity is similar to the shield plug cavity. The sleeve connects the upper portion of the SST to the FHM base during IFA insertion operations. The hoist for the nose unit sleeve is designed to NOG-1-1983 Type II standards.

6. The FHM alignment cavity houses equipment used to align the FHM relative to the SST or the TC LUP.

The FHM base has four areas which are briefly described below:

1. The base structure of the FHM is manufactured from cast iron for shielding purposes and is supported by the ball bearing located on the FHM upper assembly. The base unit provides mounting points or housings for the FHM nose unit, the FHM shielding skirt and portions of the depression system.

2. The FHM nose unit is a retractable guide for the nose unit sleeve. It also serves the function of a seal when the depression system is in use for access to an IFA in the SST or TC.

3. The FHM shielding skirt is a cast iron ring providing shielding between the charge face and the FHM base. It is lowered into position by jacks from the base.

4. The FHM depression system is a self-contained system designed to create a partial vacuum in the internal volumes of the FHM. It is used during transfer of IFAs into and out of the FHM. Any particulate contamination passes through HEPA filters before being discharged to the charge hall. It is covered in another part of this SER.

Transfer Cask Reception Bay

Chapter 5 of the TR gives a detailed description of the fuel handling systems including the transfer cask reception bay and equipment (TCRB). This equipment is broken down into three large generic (i.e., PWR, BWR) groups which are the cask handling crane, the transfer cask (TC) trolley and the load/unload port (LUP). Appendix A5.4 of the TR provides the analysis and supporting details for these systems.

1. The transfer cask handling crane an is electrically driven overhead crane with a 25 ton lift capacity. The crane is restricted to long travel. The primary purpose of the crane is to transfer the TC from the road trailer to the TC trolley. The crane is mounted on a trolley 24 feet above the datum in the reception bay area. It shall be designed to ASME NOG-1 Type 1 specifications. Type 1 designates that it has single failure proof features.

   Each of the two hoist ropes has a safety factor of 5 (Note: a discrepancy in the TR A5.4-20 states that S.F.=10). There are various safety systems associated with the drum/rope/electric drive system. They include protection against: (a) overspeeding, (b) blocking accidents, and (c) mis-reeving in drum grooves.

   The hook attachment is not considered to be a part of the generic MVDS. It therefore must be considered as a part of the site-specific application.

2. The transfer cask trolley is used to transport the TC from the reception bay to the load/unload port. It is supported on rails which are located 2'-1" below the TCRB floor level. The trolley shall be designed to the specification of ASME NOG-1-1983 for Type 1.

   The trolley is a welded steel structure driven by a pair of wheels with a power pick-up located on a protected bus bar. A specifically designed clamp is used to fix the TC to the trolley.

This clamp prevents toppling of the cask under seismic loading and effects of sudden stopping or collision with the LUP.

3. The load/unload port is located in the roof of the TC preparation area. Its purpose is to provide the access between the TC on the trolley and the FHM in the charge hall. For the purpose of the TR, FW has provided illustrative layouts for the LUP should it be used in conjunction with a NLI 1/2 cask.

   The LUP uses a cast iron rising plug which moves vertically when electrically driven jack screws are energized. It must be raised for the TC to enter the LUP area, and lowered to secure it and provide shielding functions once the TC is correctly located in the LUP.

Transfer Cask Modifications

For illustrative purposes, FW has chosen the NLI 1/2 cask to demonstrate the feasibility of certain aspects of their overall design. The choice of a transfer cask is site-specific. Should an applicant for a license choose an NLI 1/2 cask, various modifications to the cask would be necessary to ensure proper safe interface between the cask and the MVDS system. Chapter 5 and Appendix A.5.3 of the TR describe the modifications.

The primary modification is the replacement of the inner closure with a unit incorporating a removable shield plug. FW discusses modifications necessary for the PWR and BWR types of fuel. The fuel basket will also be modified to reduce clearance between the fuel assembly and the underside of the inner closure. This modification will reduce impact loading during a cask drop accident.

For the PWR design, the inner closure consists of an outer ring and a removable inner shield plug with a common diameter, appropriately stepped for shielding purposes. The outer ring is bolted and sealed to the original cask head, whereas the inner removable shield plug is held in position by a clamping ring bolted to the outer ring. The outer ring of the closure is secured to the cask with the same number and size bolts as the original design. The bore of the outer ring is sized such that an IFA can pass

through during loading and unloading operations. Sealing between the outer ring and the inner plug is accomplished via a VITON O-ring.

For the BWR design, two IFAs are carried in the TC. The modification provides for a rotatable plug which houses a removable plug. The rotatable plug is secured by bolts to the outer ring. The rotating plug allows either of the fuel positions to be accessed.

3.2.2.2 Acceptance Criteria

The structural and mechanical integrity of the five basic structural and mechanical systems which are important to the safety of the FW ISFSI will be judged adequate if it can be demonstrated that the stresses induced by the loads noted in Section 3.3.1 below are lower than the allowable stress limits for the components comprising those systems and that all other material properties are consistent with applicable code requirements, suitable industry standards or NRC-determined specifications. The criteria used to determine allowable stresses and the load combinations used in the calculations are evaluated at Chapter 2.

Elements of evaluation also include review of application of engineering judgment and the appropriate use of engineering design practices. Thus, the evaluation must address whether the load combinations were appropriately applied, whether calculations which led to design or selection of structural elements included all of the potential load combinations which may govern, and whether stresses were calculated for the points of maximum stress. The structural evaluation acceptance criteria can be outlined as comprising the following validation or evaluation elements:

1. Design criteria appropriate?
2. Design criteria appropriately used?
3. Potentially governing situations or load combinations addressed?
4. Potentially critical cross-sections investigated?
5. Design criteria satisfied?

In addition, since the submitted design does not include complete construction or fabrication drawings, and detailed calculations are not included to support every element of the design, the evaluation also

addresses whether there are design features important to safety which should be subjected to a fuller analysis, and which therefore should not be accepted as part of the MVDS approved by the NRC. Such features (structural elements, etc.) could be required elements of subsequent site-specific application submittals.

The structural evaluation is based on sources establishing the required content and the criteria for design. This is addressed in Chapter 2. The hierarchy of sources, as used in this review are listed below in order of primacy.

1. 10 CFR 72
2. Regulatory Guide 3.48
3. ANSI/ANS 57.9-1984, as endorsed by Reg. Guide 3.60, and documents incorporated by reference and further reference [principally ACI 349-80, AISC Specification for the Design, Fabrication and section of Structural Steel for Buildings (contained in the Manual of Steel Construction), ANSI/ASME NOG-1-1983, ASME B&PV Section III, and ANSI/ASME N509-1980].

3.2.2.3 Review Method

The method of review used to assure that the TR was in compliance with 10 CFR 72.72 involved several steps. The TR was reviewed first for completeness, ensuring that all areas specified by 10 CFR 72.72 were addressed, and that the standard format and content specified by Regulatory Guide 3.48 were followed. All sources cited by the TR were reviewed for applicability to the design of the FW MVDS system. Chapters 3, 8 and various appendices of the TR, which set out the design criteria, were examined critically for appropriateness. All underlying assumptions stated in the TR were assessed with respect to those suggested by the professional societies which guide the design practice for reinforced concrete structures electric overhead cranes with top running bridge and trolley, and pressure vessels. The societies and their respective codes are: ANSI/ANS 57.9-1984, ANSI A58.1-1982, the American Society of Mechanical Engineers (ASME Boiler and Pressure Vessel Code for Pressure Vessels, Section VIII, Division 1, 1986), the American Concrete Institute (ACI 349-80, ACI 349R-80 and 1984 Supplement to Code Requirements for Nuclear Safety Related Concrete

Structures), the American Institute of Steel Construction (AISC Specification for the Design, Fabrication and Erection of Structural Steel for Buildings), and ANSI/ASME (Rules for the Construction of Overhead and Gantry Cranes NOG-1, 1983). The modifications to the shipping cask were made in compliance with 10 CFR 71 and NRC Regulatory Guide 7.8.

The review process involved both validation of calculations in a detailed check of the submitted work, and an overview to identify potential omissions or errors in judgment, assumptions, and selection of the elements and sections subject to detailed design in the TR. This included verifying all calculations which could be executed without resorting to computer models. The finite element computer models which FW calculated were verified for accuracy by examining the input and output printouts for all ANSYS (Engineering Analysis System User's Manual, Volumes I and II, 1983) and FW post processor codes. All results which were included in Chapter 8 as well as the appendices were either verified by hand calculations or by examining the computer printouts. No independent computer analysis was performed.

3.2.2.4 Key Assumptions

Assumptions were made by FW in the MVDS structural design. These assumptions typically were made in conjunction with selecting specific load conditions and critical sections for detailed design. Such assumptions are general engineering design practice. Their use avoids making a great number of calculations demonstrating that most of the potential load combinations do not govern the design (produce the maximum stress), and the other sections of a structural element are not as highly stressed as the critical section.

Uncertainty is associated with any "assumption." In the design of the MVDS, the uncertainty was generally minimized by initial calculation of all of the loads, comparison of magnitudes, and selection of those cases (such as load combinations) which could potentially dictate the design. Uncertainty in selection of critical section was addressed by calculation at more than one point along the structural element.

3.3 DISCUSSION OF RESULTS

3.3.1 Loads

The FW TR describes loads for normal operating and off-normal conditions and for accident conditions (Sections 8.1 and 8.2 of the TR). The expressions for combinations of loads established by ANSI/ANS 57.1-1984 and as used (in modified form, as described and evaluated at Tables 2.4.1-3 and 2.4.1-4 in Chapter 2) by FW involve combinations of all of these conditions. Many of the safety-related components and systems of the FW MVDS are designed to standards referenced by ANSI/ANS 57.1-1984. Thus systems designed to ASME B&PV Code and NOG-1-1983 are also presented in Chapter 2 and compared in Chapter 3 of this SER. The evaluations in this chapter parallel the evaluation of the criteria in Chapter 2 in comparing the design and design calculations against the load combination criteria under the discussion for "Normal Operating Conditions," and then providing any appropriate further evaluation of design adequacy for the off-normal and accident conditions under those respective sections.

Load values used for the civil structure design are discussed and evaluated as constituting part of the design criteria. These loads are shown in Table 2.4.1-5, Chapter 2. The loads are recommended for acceptance, except that verification of the ground accelerations used in the response spectrum seismic analysis requires validation in a site-specific application; and inclusion of impact and vibration live loads is not apparent from the listing of loads (appropriate consideration in the design resolves this condition on the criteria).

3.3.1.1 Normal Operating Conditions

Section 8.1.1 of the TR defines the normal operating conditions of the MVDS system. The normal operating loads of the MVDS system are dead weight loads, design basis internal pressure loads, design basis thermal loads, operational handling loads and design basis live loads. The primary criteria associated with each of these loads are presented in Table 2.4.1-1 together with the description of the MVDS components affected by each of the loads. The loads for the civil structure are shown in Tables 2.4.1-3, 2.4.1-4, and 2.4.1-5 of Chapter 2. The normal loads for loads for the SST

summarized in Table 2.4.2-1. The normal loads for the FHM and FHMC are shown in Table 2.4.3-1. Loads for the TC trolley are given in Table 2.4.4-1, and loads for the TC lid modifications are presented in Table 2.4.5-1. The staff has reviewed these loads and considers them to be acceptable, except as noted in the tables.

3.3.1.2 Off-Normal Conditions

Section 8.1.2 of the TR defines the off-normal events. These are events which are expected to occur on a moderate frequency. The implications of these to the civil structure design are indicated at Table 2.4.1-6, Chapter 2. The off-normal events described by FW do not result in any loads requiring further analysis over those included in Tables 2.4.1-3, 2.4.1-4, and 2.4.1-5. There are no other off-normal events which are considered to require further analysis for the civil structure (per the staff evaluation at Section 2.4.1, Chapter 2).

The primary criteria associated with each of these loads for the mechanical systems are presented in Tables 2.4.2-2, 2.4.3-2, 2.4.4-2 and 2.4.5-2 together with a description of the MVDS components affected by each of the loads. The staff has reviewed these loads and considers them to be acceptable.

3.3.1.3 Accident Conditions

Section 8.2 of the TR defines accident conditions due to extreme environmental conditions, natural phenomena and postulated accidents. The extreme environmental and natural phenomena conditions include tornado winds and tornado missiles, flood, earthquakes, lightning, and snow and ice. The primary criteria associated with each of these load conditions have been previously discussed, in Section 2.4 of this SER.

The implications of accident conditions for the civil structure design are indicated at Table 2.4.1-7, Chapter 2. The accidents described by FW do not result in any loads requiring further analysis over those included in Tables 2.4.1-3, 2.4.1-4, and 2.4.1-5. Additional accident conditions (such as tsunamis, seiches, aircraft impact, etc.), not included must be addressed in site-specific applications, as per Section 2 of Regulatory Guide 3.48.

With the exception of flooding from various causes and aircraft impact, the FW TR addressed the site-specific accident situations by designing for worst case conditions of tornado and earthquake for credible U.S. sites.

The primary design loads for accident conditions for the mechanical systems are summarized in this SER in Tables 2.4.2-3, 2.4.3-3, 2.4.4-3 and 2.4.5-3. The NRC staff has reviewed these loads and finds them to be acceptable except where omitted by the TR. These cases are noted in the above tables.

3.3.2 Materials

FW makes a very general statement regarding materials in each of the supporting appendices to the effect that "specifications for material, manufacture, inspection, assembly and test... will be provided for each system." Each appendix is provided with a table showing the material specification for each of the components. In most cases the materials are specified as American Society for Testing Materials (ASTM), the ASME Boiler & Pressure Vessel Code, Section III-1 Appendices, ANSI/ASME NOG-1-1983, the American Concrete Institute ACI-349-80, and the AISC Manual of Steel Construction, 8th Edition. Frequently FW provides material designations from the equivalent British Standard.

For the materials so specified, the NRC staff finds that the published standards are consistent with the quality requirements of 10 CFR 72.72(a). There are however numerous cases where specialized materials such as the VITON O-Rings for the SST plugs or the HOLOKROME cap screws for the outer load frame of the FHM are called out. For such cases, the NRC staff has commented on the suitability of the published material.

Materials used for design of the civil structure are included in the FW TR at paragraph 4.2.1.4 and at Appendix A4.4, Calculation 2, Sections 2 and 3. These materials are shown and the allowable stress values are evaluated at Tables 2.4.1-3 and 2.4.1-4, Chapter 2.

3.3.3 Strength Requirements and Stress Limits

The mechanical properties of the reinforced concrete and steel as used by FW TR for design and analysis of the civil structure are included on Tables 2.4.1-3 and 2.4.1-4, Chapter 2. These are included in the FW TR at Appendix A4.4, Calculation 2, Sections 2 and 3. FW used a modulus of elasticity for structural steel of 29,000,000 psi: Allowable steel stress was taken as 0.6 x nominal yield stress.

FW used a modulus of elasticity of 4,000,000 psi for 5000 psi concrete, which is within one percent of a value calculated using ACI 349-80. FW used a coefficient of linear expansion of .0000065 per degree F for 5000 psi concrete. ACI 349-80 specifies that .0000055 per degree F be used unless other values are substantiated by tests (ACI 349-80 section A.3.3(d)). The result is that the number used by FW is conservative and represents a typical upper bound on coefficients of linear expansion for concrete.

It is recommended that the NRC accept the material properties and stress limits used for the design of the MVDS civil structure.

All the mechanical components reviewed in this chapter of the SER have been designed according to the design criteria of (1) ASME Section VIII Division 1 (i.e., the SST and plug), (2) NOG-1-1983 (i.e., the FHM, FHMC, TC trolley and crane), and (3) ANSI 57.9-1984 for all remaining components. However as noted in Section of 3.3.4.2 of this SER, FW's design of the SST does not meet the stress limits of ASME Section VIII Division 1. The staff recommends that FW use Section III Division 1, Service Level D to comply with an acceptable design criteria. The allowable stress levels for all of the safety-related components have been compiled in the relevant tables of this chapter.

3.3.4 Analysis of Structures and Mechanical Equipment

3.3.4.1 Civil Structure

The design calculations for the civil structure included in the FW TR are listed in Table 3.3.4.1-1. The calculations were included in Appendix A4.4 of the TR and, by reference in the separate FW report, NO. EA-86/18,

"GEC Modular Vault Dry Store Seismic Analysis" which was submitted to the NRC as a supporting document. Table 3.3.4.1-1 includes a description of the principal elements or findings of the individual calculations, and staff evaluation and recommendations.

The exceptions to the FW civil structure design as presented in the TR shown in Table 3.3.4.1-1 are discussed in the following paragraphs and are summarized at Section 3.1 of this report.

Massive Concrete Structure

Normal, Off-Normal, and Accident Conditions

The design of the massive concrete structure is presented in the FW TR in Sections 4.2.1 and 4.2.2. The design is illustrated in Figures 4.2.2-1 through 4.2.2-8 of the TR. The structural safety criteria are presented in Section 3.2 of the TR. Normal, off-normal, and accident conditions and events are presented and discussed in Sections 8.1 and 8.2 of the TR. The design criteria and the design analyses are based on design for load combination expressions which integrate the loads due to normal, off-normal, and accident conditions and events. The design analysis is presented in the TR at Appendix A4.4, Calculations 1, 2, 104, 105, 106, 109, 110, and 111.

Results of the staff review of the criteria are presented at Chapter 2 of this SER. The staff evaluation and recommendations on the design analysis (Appendix A4.4 of the TR) are presented in Table 3.3.4.1-1. The exceptions to the design of the massive concrete structure (taking the entire civil structure with the exception of the steel enclosure structure for the charge hall, and not including the charge face structure) are further discussed below:

1. The design is not based on meeting the combination of load requirements as explicitly presented in ANSI 57.9-1984. This is also discussed under the criteria review at Tables 2.4.1-3 and 2.4.1-4. This complicates the review and validation process as calculations require further verification against the appropriate criteria. Use of inappropriate unconservative criteria, or the

TABLE 3.3.4.1-1 CIVIL STRUCTURE DESIGN AND ANALYSIS CALCULATIONS INCLUDED IN THE TR
Reference: TR Appendix A4.4

REFERENCE	CALCULATION	PRINCIPAL ELEMENTS/FINDINGS	STAFF EVALUATION	STAFF RECOMMENDATION
Appendix A4.4				
Calc 1 Introduction and Design Philosophy				
Sec 2	Design Philosophy			
	2.1 General	Structural breakout	Appropriate	Accept
	2.2 Reinf. conc. design	Compliance with ACI 349-80	Appropriate, except that load combinations should meet ANSI 57.9	Accept (ANSI 57.9 discussed elsewhere)
	2.3 Structural steelwork and cladding	Further breakout	Appropriate	Accept
	2.4 Foundations	Illustrative	Appropriate	Accept
	2.5 Precast concrete	Air flow assemblies described	Appropriate	Accept
	2.6 Missile impact	Discussion of critical impacts	Appropriate	Accept
	2.7 Cyclic loading	Determined not to be a problem, except site-specific soils may be sensitive.	Appropriate, soils deferred to site-specific applications	Accept
Calc 2 Design Data and Loadings				
Sec 1	Codes and standards	Sources and use made	Appropriate	Accept
Sec 2	Concrete and reinf. grades, cover, etc.	Design values	Addressed in Table 2.4.1-3, Chapter 2 of SER	
Sec 3	Structural steelwork grades and strengths	Design values	Addressed in Table 2.4.1-4, Chapter 2 of SER	
Sec 4	Wind loads	Design values	Addressed in Table 2.4.1-5, Chapter 2 of SER	
Sec 5	Snow loads	Design values. Load on sloping roof.	Appropriate	Accept
Sec 6	Earthquake loads	Design values, approach	Addressed in Table 2.4.1-5, Chapter 2 of SER	
Sec 7	Temperature effects	Critical temperature crossfalls, calculational procedures and formula	Appropriate and adequate	Accept
Sec 8	Foundation design	Description of illustrative soils and design approaches	Adequate for illustration	Accept for illustration

TABLE 3.3.4.1-1 CIVIL STRUCTURE DESIGN AND ANALYSIS CALCULATIONS INCLUDED IN THE TR (cont'd)
Reference: TR Appendix A4.4

REFERENCE	CALCULATION	PRINCIPAL ELEMENTS/FINDINGS	STAFF EVALUATION	STAFF RECOMMENDATION
Sec 9	Load factors and combinations for RC design	Load combination expressions	Addressed in Table 2.4.1-3, Chapter 2 of SER	
Sec 10	Load combinations for structural steel design	Load combination expressions	Addressed in Table 2.4.1-4, Chapter 2 of SER	
Sec 11	Water level (flood) design	Assumption of no flood	Deferred to site-specific applications	Accept omission from TR
Calc 103	Structural Steelwork and Cladding			
Sec 2	Loading			
	2.1 Normal wind loading	Calculations of loads	Appropriate	Accept
	2.2 Tornado wind loading	Calculation of loads, rationale for not using both max wind and max suction at same point.	Appropriate and adequate	Accept
	2.3 Other loadings	Comparison of loads with DBT. Other loads negligible relative to DBT, except for equipment.	Adequately expressed	Accept
Sec 3	Design of cladding and fixings (attachment bolts)	Within combination of load allowables. 2" diam. 1/8" th washer under bolts required.	Adequate	Accept
Sec 4	Purlins and sheeting rails	Within combination of load allowables.	Adequate	Accept
Sec 5	Main roof frame	Within combination of load allowables. Selection of members and connections.	Adequate	Accept
Sec 6	Main columns "E" line	Within combination of load allowables. Section, attachments, base.	Adequate	Accept
Sec 7	Roof bracing	Within combination of load allowables.	Adequate	Accept
Sec 8	Connection (of roof frames) to concrete	Design of bracket, within combination of load allowables	Adequate	Accept

TABLE 3.3.4.1-1 CIVIL STRUCTURE DESIGN AND ANALYSIS CALCULATIONS INCLUDED IN THE TR (cont'd)
Reference: TR Appendix A4.4

REFERENCE	CALCULATION	PRINCIPAL ELEMENTS/FINDINGS	STAFF EVALUATION	STAFF RECOMMENDATION
Sec 9	Gable framing-permanent end-line 1	Within combination of load allowables.	Adequate	Accept
Sec 10	Gable framing-temporary end-lines 6 and 11	Within combination of load allowables. Sections and attachments. Configuration of precast missile wall.	Adequate	Accept
Sec 11	Bracing on E Line	Within combination of load allowables.	Adequate	Accept
Sec 12	Runway beam and supports (monorail crane support)	Within combination of load allowables	"Overstress" allowable for DBT used for design governed by liveload for crane rail supporting W6x20 members. Combination 1 (Table 2.4.1-4, Chapter 2 of SER) should be used.	Do not accept design of crane rail supporting W6x20 for 3 ton hoist loading.
Sec 13	Weight of steelwork	Deadload weights calculated	Appropriate	Accept
Sec 14	Check on pressure immediately after DBT	Loadings less severe	Appropriate	Accept
Calc 104	Cask Receipt Bay and Gantry			
Sec 2	Design philosophy	Description and design approach. Stair tower not designed.	Appropriate, except that stair tower is safety-related.	Conditionally accept. Stair tower design must be reviewed by staff site-specific submittal.
Sec 3	Gantry beams for unloading crane	Develop loads and design sections. Within allowable stesses.	Adequate	Accept

TABLE 3.3.4.1-1 CIVIL STRUCTURE DESIGN AND ANALYSIS CALCULATIONS INCLUDED IN THE TR (cont'd)
Reference: TR Appendix A4.4

REFERENCE	CALCULATION	PRINCIPAL ELEMENTS/FINDINGS	STAFF EVALUATION	STAFF RECOMMENDATION
Sec 4	Concrete structure			
	4.1 General	Loading conditions described	Appropriate	Accept
	4.2 Crane beam support bracket	Calculation of loads and moments	Appropriate	Accept
	4.3 Wind loads	Calculation of loads	Appropriate	Accept
	4.4 Wall design for outer door location	Detailed loads and moments. Designed to satisfy combination of load stress limits.	Appropriate	Accept
	4.5 Wall design for inner location	Calculation of loads and design to satisfy combination of load stress limits.	Appropriate	Accept
	4.5 [sic] Roof design	Calculation of loads and design to satisfy combination of load stress limits.	Appropriate	Accept
	4.6 End wall	Design to satisfy combination of load limits.	Appropriate	Accept
	4.7 Beam supporting FHM	Design to support FHM	Live load factor of 1.7 not used for load. Conservative approach, however, results in adequate section.	Accept
	4.8 Foundations	Design and check of soil pressures.	Based on "footings" illustrative design for "firm to stiff cohesive soil." No calculation for poorer soil corresponding to the piled raft illustrative case.	Accept only as an illustration. Require foundation design with site-specific application.
Sec 5	Annex support slab	Design to satisfy combination of load limits.	Appropriate	Accept
Sec 6	Access door in TCRB	Analysis of door failure in DBT impact on transfer cask.	Adequate	Accept

TABLE 3.3.4.1-1 CIVIL STRUCTURE DESIGN AND ANALYSIS CALCULATIONS INCLUDED IN THE TR (cont'd)
Reference: TR Appendix A4.4

REFERENCE	CALCULATION	PRINCIPAL ELEMENTS/FINDINGS	STAFF EVALUATION	STAFF RECOMMENDATION
Calc 105	Exhaust Stack			
Sec 3	Loads to be considered	Description of loads, only Eo included in Calc 105. Seismic at Calc 110.	ANSI 57.9 does not recognize Eo	Acceptable at Calc 110
Sec 4	Elements considered	Division into separate elements	Appropriate	Accept
Sec 5	Evaluation of loads	Calculation of loads. Includes quasi-static earthquake loads per ACI 307-79 ("Design and Construction of RC Chimneys").	Appropriate	Accept
Sec 6	Loads due to DBT	Calculations of worst case loads and analysis of vortex shedding on stack canopy.	Adequate	Accept
Sec 7	Thermal effects	Calculation of thermal bending moments	Conservative choice of coef. of linear expansion	Accept
Sec 8	Load cases	Applicable load combinations selected	Addressed in Table 2.4.1-3, Chapter 2 of SER. Thermal loads should not be used to reduce loads which would otherwise require a greater section. Appropriate if only used additatively, per ANSI 57.9-1984, sections 6.17.3.1 and 6.17.3.2.	Accept (as used in actual calculations)
Sec 9	Analysis of sections			
	9.1 Wall spanning horiz. (above +32')	Designed to satisfy combination of load limits.	Appropriate	Accept
	9.2 Design of main shaft in bending and shear	Designed to satisfy combination of load limits	Appropriate	Accept

TABLE 3.3.4.1-1 CIVIL STRUCTURE DESIGN AND ANALYSIS CALCULATIONS INCLUDED IN THE TR (cont'd)
Reference: TR Appendix A4.4

REFERENCE	CALCULATION	PRINCIPAL ELEMENTS/FINDINGS	STAFF EVALUATION	STAFF RECOMMENDATION
Sec 10	Design of top hat			
	10.1 General	Loading conditions	Appropriate	Accept
	10.2 Design of slab	Calculation of loads. Designed to satisfy combination of load limits.	Dead load factored as live load (conservative). Adequate	Accept
	10.3 Design of columns	Design to satisfy combination of load limits.	Appropriate	Accept
	10.4 Design of fins (spoilers)	Design to satisfy combination of load limits for DBT	Adequate	Accept
Sec 11	Column design in steel tube (for "top hat")	Design of column and embedment (alternate to RC columns)	Adequate	Accept
Calc 106	Cells above foundations			
Sec 2	Structural components considered	Description of different elements used for analysis and design and identification of principal loads for design	Does not include: cantilevered RC over cooling air inlet duct and supporting exterior walls and columns; floors, stairs, and walls in administrative, electrical, and mechanical areas; elevated walks in TC preparation area; charge hall floor over TC preparation and administrative areas; and emergency exits. All of the identified omissions are considered safety related.	Do not accept as constituting a complete conceptual design. Require design analysis for omitted elements in subsequent or site-specific submittals.
Sec 3	Upstand walls	Calculation of loads and design to satisfy combination of load limits	Adequate, except not designed in conjunction with RC over cooling air inlet duct.	Accept (with above conditions)

TABLE 3.3.4.1-1 CIVIL STRUCTURE DESIGN AND ANALYSIS CALCULATIONS INCLUDED IN THE TR (cont'd)
Reference: TR Appendix A4.4

REFERENCE	CALCULATION	PRINCIPAL ELEMENTS/FINDINGS	STAFF EVALUATION	STAFF RECOMMENDATION
Sec 4	FHM support beams	Calculation of loads and design on a "permissible stress" basis	Combination of loads design required. Resulting design adequate, except not designed in conjunction with RC over cooling air inlet duct.	Accept (with above conditions)
Sec 5	Link bays lines 5-7			
	5.1 Introduction	Description		
	5.2 General philosophy	Discussion of potential settlement allowance	All settlements assumed as vertical, no differential settlement of adjacent MVDS modules described.	Potential settlements be addressed in add-on MVDS site-specific submittals.
	5.3 Design of cantilevers (beams and slab)	Calculation of loads. Beam design on a "permissible stress" basis. Slab designed to satisfy combination of loads limits. Stage 2 cantilever slab of different design and not included.	Combination of loads design required. Resulting design adequate. Stage 2 cantilever slab design required in site-specific design.	Accept, except stage 2 slab design needed in stage 2 site-specific application.
Sec 6	Walls at permanent end	Calculation of loads and moments		
	6.2 End wall spanning as a beam	Calculation of loads and design to meet combination of load limits	Adequate	Accept
	6.3 Side walls lines A&E as cantilevers	Calculation of load and design on "permissible stress" basis	Design for combination of loads required. Resulting design adequate.	Accept
Sec 7	Main cell walls			
	7.1 General	Description of principal loads	Adequate	Accept
	7.2 Division wall between cells	Reinforcing steel area driven by thermal stress. Load combination 4 used (see Table 2.4.1-3) of SER.	Load factor of 0.75x1.7=1.275 should be used per ANSI 57.9-1984; expression 6.17.3.1d should be used for loading. Resulting design adequate per check.	Accept

TABLE 3.3.4.1-1 CIVIL STRUCTURE DESIGN AND ANALYSIS CALCULATIONS INCLUDED IN THE TR (cont'd)
Reference: TR Appendix A4.4

REFERENCE	CALCULATION	PRINCIPAL ELEMENTS/FINDINGS	STAFF EVALUATION	STAFF RECOMMENDATION
	7.3 End walls of cells	Reinforcing steel area driven by thermal stress. No factor on load used (as above).	Load factor of 1.275 should be used per ANSI 57.9-1984. Resulting design should be checked.	Do not accept. Require redesign or check in subsequent submittal or site-specific submittal.
Sec 8	Cell floors			
	8.1 Loading	Loading calculated. Does not include vertical seismic loads.	Seismic load should be considered. Does not change design.	Accept
	8.2 Bending moments	Calculation of moments. Thermal loading dominates. No factors applied in combination of load expression.	Load factors per expressions 6.17.3.1d or e, ANSI 57.9-1984 should be applied to determine worst case for design.	Do not accept. Require redesign or check in subsequent submission or site-specific submittal.
	8.3 Reinforcement areas	Designed per loads as described above.	Resulting design does not meet proper combination of load expression per ANSI 57.9-1984.	Do not accept. Redesign apparently required.
	8.4 Slab under collimators	Design checked for point loading	Adequate	Accept
Sec 9	Arrangement of reinforcement in cell walls and floors	Provides descriptive sketch	Adequate, except that reinforcement may not meet ANSI 57.9-1984, as discussed above.	Do not accept pending redesign and check.
Calc 107	Foundations - Footings			
Sec 1	Purpose of calculation	Illustrative footing-type foundation design for stage 1 MVDS	Appropriate	Accept as an illustration only.

TABLE 3.3.4.1-1 CIVIL STRUCTURE DESIGN AND ANALYSIS CALCULATIONS INCLUDED IN THE TR (cont'd)
Reference: TR Appendix A4.4

REFERENCE	CALCULATION	PRINCIPAL ELEMENTS/FINDINGS	STAFF EVALUATION	STAFF RECOMMENDATION
Sec 2-8	(Design)	Assumptions, load calculations, design to satisfy combination of load requirements	Appropriate for illustration only. Design basis earthquake should be used, per ANSI 57.9-1984.	Accept as an illustration only. Require design in site-specific application even for soil conditions equal or better than those assumed.
Calc 108	**Foundations - Piled Raft**			
Sec 1	Purpose of calculation and introduction	Illustrative foundation design for "soft" ground conditions	Appropriate for illustration only	Accept as an illustration only.
Sec 2-7	(Design)	Assumptions, load calculations, design to satisfy combination of load requirements, Eo earthquake loads used.	Design basis earthquake should be used, per ANSI 57.9-1984.	Require design in site-specific application even for soil which matches that assumed.
Calc 109	**Precast Concrete Collinators**			
Sec 1	Purpose of calculation and introduction	Description of selection and design basis. "Absence of any appreciable structural loading" on collinators.	Loading assumption not validated, e.g., DBT pressures and flow, deadloads, temperature, seismic.	Do not accept loading assumption.
Sec 2	Steel areas	Steel areas based on ACI 349-81 minimums. No in place loadings used for design. Vertical supports checked for moments while in handling.	Design should be validated against loads, as above.	Do not accept absence of design or check against loads.

TABLE 3.3.4.1-1 CIVIL STRUCTURE DESIGN AND ANALYSIS CALCULATIONS INCLUDED IN THE TR (cont'd)
Reference: TR Appendix A4.4

REFERENCE	CALCULATION	PRINCIPAL ELEMENTS/FINDINGS	STAFF EVALUATION	STAFF RECOMMENDATION
Calc 110	Missile Impact Considerations			
Sec 1	Introduction and purpose of the calculation	Worst case (Region I) tornado used.	Appropriate	Accept
Sec 2	Tornado missile spectrum	Extract of NUREG-0800, Table 2	Appropriate	Accept
Sec 3	General structural philosophy	RC thickness to be used to 30' elevation. Analysis of missile strikes. Discussion of effect on structural steel.	Inadequate proof of assumption on structural steel. Conclusion appears appropriate per independent review.	Accept
Sec 4	Overall barrier design	Description of design basis	Appropriate	Accept
Sec 5	Calculation of local damage effects	Penetration, scabbing, and perforation thickness estimated. Effect of missile and target deformation. Damage estimated for "top hat" column.	Adequate	Accept
Calc 111	Seismic Analysis (FWEA Document EA 86/18)			
Sec 1	Introduction	Description of basis (safe shutdown earthquake with 0.25 g maximum ground acceleration), and the response spectrum and time history analyses performed.	Addressed in Table 2.4.1-5, Chapter 2 of SER.	
Sec 2	Summary and conclusions	Summary results of response spectrum and time history analyses.	Appropriate	Accept

TABLE 3.3.4.1-1 CIVIL STRUCTURE DESIGN AND ANALYSIS CALCULATIONS INCLUDED IN THE TR (cont'd)
Reference: TR Appendix A4.4

REFERENCE	CALCULATION	PRINCIPAL ELEMENTS/FINDINGS	STAFF EVALUATION	STAFF RECOMMENDATION
Sec 3	Response spectrum analysis	Description of model of elements, weights, boundary soil properties for 16 potential sites, and results. Stresses compared against allowables.	Concrete compressive allowable does not incorporate strength reduction factors per ACI 349-80, Section 9.3. Does not impact actual design due to very low stresses (structural design governed by DBT).	Accept analysis and results. "Allowable" concrete stresses shown are not accepted.
Sec 4	Time history analysis	Data source, model description with simplifications and results. Stresses compared against allowables.	Same comments as above.	Accept analysis and results.
Calc 113	PWR Charge Face Structure			
Sec 1	Object and introduction	Description and loads to be considered	Adequate	Accept
Sec 2	Design philosophy	Design approach. Designed as steel versus composite structure.	Appropriate	Accept
Sec 3	Loadings and load cases	Loads calculated. Load combination expressions. Thermal loading not included.	Direct thermal loadings and potential change in support point assumptions due to thermally induced deflection ("bowing") should have been addressed. Independent staff review indicates that the design is structurally adequate. Thermal deflection is not expected to stress SST or affect shielding.	Accept

TABLE 3.3.4.1-1 CIVIL STRUCTURE DESIGN AND ANALYSIS CALCULATIONS INCLUDED IN THE TR (cont'd)
Reference: TR Appendix A4.4

REFERENCE	CALCULATION	PRINCIPAL ELEMENTS/FINDINGS	STAFF EVALUATION	STAFF RECOMMENDATION
Sec 4	Design of main structure	Stresses checked (sections chosen for function) against combination of load allowable stresses.	Adequate	Accept
Sec 5	Missile impact			
	5.1 Impact in center of plate	Energy transfer calculated	Adequate	Accept
	5.2 Local damage effects	Assessment	Adequate	Accept
	5.3 Overall damage effects	Assessment	Adequate	Accept
	5.4 Impact at edge of structure	Assessment	Adequate	Accept
	5.5 Stresses under impact	Assessment	Adequate	Accept
	5.6 Deflection under impact	Assessment	Adequate	Accept
Sec 6	Conclusions	Adequacy of design	Appropriate	Accept

wrong load or "overstress" factors was noted below (references are to the design analyses at Appendix A4.4 of the FW TR):

a. Calc. 104 Cask Reception Bay, Section 4.7, beam supporting FHM. Live load was not properly factored. Otherwise conservative design resulted in an acceptable section.

b. Calc. 106, Cells Above Foundations, Section 7.2, division wall between cells. The appropriate load multiplication factor was not used. Other design basis resulted in an acceptable section.

c. Calc. 106, Cells Above Foundations, Section 7.3, end walls of cells. The appropriate load multiplication factor was not used. Actual design may or may not be adequate. Further analysis is recommended.

d. Calc. 106, Cells Above Foundations, Section 8, cell floors. The design apparently does not meet the combination of load requirement of ANSI 57.9-1984, expression 6.17.3.1c and 6.17.3.1.d. Redesign or further analytical validation is recommended.

e. Calc. 109, Precast Concrete Collimators. Sections were designed with essentially no reference or check against loads, other than load in handling. Analytical verification of design adequacy is recommended.

2. Design procedures were used which are not in accordance with those specified by ANSI 57.9-1984 or ACI 349-80 (apart from use of inappropriate combinations of load expressions). This complicates the review and validation process as calculations require further verification against the appropriate criteria. Use of other than the authorized design procedure was noted in the following:

a. Calc. 106, Cells Above Foundations, Section 4, FHM support beams. Designed on a "permissible stress" basic in lieu of

satisfaction of combination loads. Factor of safety used resulted in an adequate design.

b. Calc. 106, Cells above Foundations, Section 6.3, side walls on lines A&E, as cantilevers. Designed on "permissible stress" basis. Resulting design adequate.

c. Calc. 111, Seismic Analysis. Concrete "allowable" stresses used for evaluation of results do not include appropriate capacity reduction factors per ANSI 57.9-1984, Section 6.17.2.1.1 or ACI 349-80, Section 9.3. This does not affect the resulting evaluations as the levels of stresses produced are under the appropriately reduced allowable stresses.

3. There are significant safety-related elements of the FW MVDS design that are not addressed in the design analysis (Appendix A4.4) and which are not considered as site-specific. Even with recognition that the FW TR does not constitute a construction drawing package, review of the design analyses for the following is recommended:

   a. Stair tower in the cask reception bay structure.

   b. Cantilevered RC over cooling air inlet duct and supporting exterior walls and columns.

   c. Floors, stairs, and structural walls in administrative, electrical, and mechanical areas.

   d. Elevated walks in the transfer cask preparation and administrative areas.

   e. Emergency exits.

4. The civil structure incorporates foundation designs which are based on specific soil conditions which may or may not match a specific site. The foundation design for the Cask Reception Bay (Calc. 104, Section 4.8) is not identified as being illustrative,

but is linked to the illustrative footing-type foundation situation. It is recommended that the cask reception bay foundation design shown in the FW TR be accepted as only an illustration and that a full foundation design including the cask reception bay be required of any site-specific applications.

5. The foundation designs are included as illustrations. It is recommended that any site-specific application include a full foundation analysis and design, even if the soil conditions match or exceed those used for either of the illustrative designs.

Enclosure Structure for Charge Hall

Normal, Off Normal, and Accident Conditions

The design of the structural steel, steel clad charge hall is presented in the FW TR at Sections 4.2.1 and 4.2.2. The design is illustrated in the TR in Figures 4.2.2-1, 4.2.2-2, 4.2.2-5, and 4.2.2-8. The structural safety criteria are presented in Section 3.2 of the TR. Normal, off-normal, and accident conditions and events are presented and discussed at Sections 8.1 and 8.2. The design criteria and design analyses are based on design for load combination expressions which integrate the loads due to normal, off-normal, and accident conditions and events. The design analysis is presented at Appendix A4.4, Calculations 1, 2, 103, 110, and 111.

Results of the staff review of the criteria are presented at Chapter 2 of this SER. The staff evaluation and recommendations on the design analysis (Appendix A4.4 of the TR) are presented in Table 3.3.4.1-1 of this SER. The exceptions to the design of the enclosure structure for the charge hall are further discussed below:

1. The design is not based on meeting the combination of load expressions of ANSI 57.9-1984, however the expressions used are considered to provide an adequate alternative. Recommendations relating to this are contained on Table 2.4.1-4, Chapter 2 of this SER.

2. Improper combination of loads expression was used for design of elements governed by the crane live load (Calculation 103, Section 12). The factor suited to determining overstress permitted with the design basis tornado was used for the live load. The result is that the design apparently is unsuited to use of the crane for 3 ton loads as the stress in the W6x20 supporting members would exceed the allowable stress.

3. There is no analytical basis provided for the assessment that a tornado generated missile impact on a major structural member would not result in collapse of the steel structure (Calculation 110, Section 3). Although the conclusion is considered correct based on staff review and structural steel damage experience, there are adequate analytical means available to provide a firmer basis.

Charge Face Structure

Normal, Off-Normal, and Accident Conditions

The design of the charge face structure is presented in the FW TR at Section 4.2.3.2. The design is illustrated in Figures 4.2.3-2 and 4.2.3-3. Its location within the MVDS is shown in Figures 4.2.2-1, 4.2.2-2, 4.2.2-3, 4.2.2-6, and 4.2.2-8. Normal, off-normal, and accident conditions and events are presented and discussed at Sections 8.1 and 8.2. The structural design criteria and design analyses are based on design for load combination expressions which integrate the loads for normal, off-normal, and accident conditions and events. The structural design analysis is presented at Appendix A4.4, Calculation 113.

The charge face structure dimensions and composition are based on provision of radiation shielding. The resulting design was then analyzed for adequacy in meeting the pertinent structural design criteria. The specific design analyzed was for a MVDS for spent fuel of a pressurized water reactor (PWR). Staff evaluation of the charge face structure designs for pressurized and boiling water reactors (illustrated in Figures 4.2.3-2 and 4.2.3-3 in the TR) is that the conclusions on the PWR design are applicable to both designs.

The staff evaluation and recommendations on the design analysis (Appendix A4.4, Calculation 113) are presented in Table 3.3.4.1-1 of this SER. The only exceptions to the design analysis of the charge face structure is the failure to consider the effects of thermally-induced stresses and deflections. Separate staff review of the design indicates that the design is adequate when such effects are included.

The staff conclusion is that the designs are structurally adequate. The staff recommends acceptance of the designs for structural adequacy.

3.3.4.2 Shielded Storage Tube and Plug

Normal Operating Conditions

Paragraph UG-22 of Division 1 of Section VIII of the ASME Code specifies the loading for pressure vessels. These loading conditions include normal conditions, environmental conditions (including wind and seismic), and accident conditions. However most of the load conditions which determine the design of pressure vessels are not well suited to the design of the SST since pressure induced stresses as well as dead loads are very low. In fact, FW did not provide any analysis for any normal operating conditions. The NRC staff calculated the internal pressure stress for the off-normal pressure required to lift the plug and found negligible hoop and axial stresses.

In spite of this lack of documentation of analysis for normal operating conditions, the NRC staff finds that the preliminary design for the SST tube and plug meets the acceptance criteria as specified. Table 3.3.4.2-1 shows the pressure stresses in the SST at the nominal 5 psig level.

Off-Normal Conditions

Similarly, FW did not suggest any off-normal events which affected the SST for which it supplied any analysis. FW postulated several events relating to the gas services systems which will be discussed in that section.

TABLE 3.3.4.2-1

MAXIMUM STRESSES FOR SST
AND PLUG FOR NORMAL OPERATING AND OFF-NORMAL LOADS

		STRESS (ksi)				
Component	Stress/Load Type	Dead Weight and Contents	Design Basis Pressure		Operation Handling	Code* Allowable
SST tube	Primary Membrane	Not provided	PWR	BWR	Not provided	Sa = 13.8
	(hoop)		0.17	0.118		
	(axial)		0.085	0.059		

*Code Allowable Stress is for Section VIII. A site-specific application should compare against Section III.

Accident Conditions

Section 8.2 of the TR defines the accident conditions for the MVDS system. Analyses were provided in various appendices for the following conditions: seismic, tornado wind pressure drop, tornado driven missile impacting the SST, dropped shield plug into SST, and dropped IFA into SST. Other accident scenarios were postulated but no analyses were presented other than estimates showing a very low probability for occurrence. All accidents for which analyses were provided are discussed below.

For a tornado wind case, FW considered a 3 psig pressure drop acting over the total length of the SST. The resulting bending moment produced primary bending stresses below the ASME Code allowable stresses. FW did not combine these bending stresses with the internal pressure stresses, as required by the Code. The NRC staff combined them and found them to be below the Code allowable stresses.

FW considered another tornado accident condition, namely a tornado driven missile impacting a loaded SST. This particular case involved a 36-inch long, 1 inch diameter steel rod being raised by a tornado to the top of the outlet duct, penetrating the duct, and then falling freely through 60 feet, bouncing through the collimaters and striking an SST head-on. Correlation of empirically derived equations for the perforation of flat steel plates showed that the energy required to perforate the SST is approximately twice the kinetic energy available from the steel rod for both the PWR and BWR designs. The NRC staff concurs with the results of this analysis.

The stresses induced by the seismic event were based on a horizontal ground acceleration of 0.25g and a vertical acceleration of 0.17 g as required by 10 CFR 72.66(a)(6)(ii). Appropriate consideration of the building amplification, the natural frequency of the simply supported SST, the material damping and the sum of both east-west and north-south horizontal vectors was made. The resulting stress levels were well below the Code allowable stress. Although FW did not perform any load combinations, the NRC staff determined that the additional membrane stress induced by the internal pressure was insignificant. Thus an ample safety

margin does exist for this load combination. See Table 3.3.4.2-2 for a summary of these results.

All other accident cases proposed by FW involve drop accidents of one type or another. All drop accidents result in calculated stresses which exceed the Code allowable as well as yield stress of the material. Because of this fact, it will be necessary for any license applicant to invoke recovery procedures following a drop of the SST plug into the SST or drop of the IFA into the SST.

The accident case involving dropping a plug into the SST was calculated by FW using two methods to predict the stress. In both cases, the yield stress of the material was exceeded. In fact, the ultimate strength of the material was exceeded according to one of the calculations. Although there would probably be no appreciable increase in radiation hazard as a result of this accident per se, it is inconceivable that either of the sealing surfaces on the SST or the plug would be usable following a drop. Therefore the recovery procedure would be executed, and in all likelihood, the SST and plug would have to be removed from further service. The NRC staff can accept the analysis and the resulting non-compliance with the Code allowable stress because the integrity of the spent fuel is not in question, and strict recovery procedures would ensure that any damaged parts not be used to store spent fuel assemblies. Table 3.3.4.2-2 summarizes these results.

The accident case involving dropping an IFA into the empty SST has the greatest potential of any of the accidents considered for causing a release because the integrity of the fuel would be compromised and the confinement barrier could be breached if the SST design were inadequate. In addition, the allowable strength of the vault floor could be exceeded if no provision were made to absorb kinetic energy of the combined IFA and SST.

The assessment of this accident case is further complicated by the fact that the ASME Section VIII Division 1 Code, which FW selected to govern the design of the SST, is not particularly applicable to this structure. In specific, this section of the Code deals with non-nuclear pressure vessels, whereas the SST is a nuclear confinement vessel with no appreciable pressure load. Of more importance, from the point of view of applicability, is the fact that Section VIII Division 1 of the Code makes no provision for

TABLE 3.3.4.2-2

MAXIMUM STRESS FOR SST AND PLUG
FOR ACCIDENT CONDITIONS

Component	Stress Type	Load Condition	Design Basis Pressure	Combined Stresses	Code* Allowable	NRC Comment
		STRESS LEVEL (ksi)				
SST tube		Tornado Wind				
	Primary Bend	PWR 10.6 BWR 15.3	PWR BWR	PWR 10.6 BWR 15.3	1.5 Sa=20.7	Satisfactory
	Primary Membrane					
	(hoop)		0.17 0.12	.17 .12	1.5 Sa=20.7	
	(axial)		0.09 0.06	10.7 15.4	1.5 Sa=20.7	
	(Energy req'd to perforate tube)	Tornado Missile 1"diam, 36" long steel rod				Results of empirical study for flat plates correlated to cylindrical shape.
	(Energy avail. to perforate tube)	PWR 2.2 BWR 2.1	N/A	N/A	N/A	

*Code Allowable Stress is for Section VIII. Site-specific application should be compared to Section III.

TABLE 3.3.4.2-2 (Continued)

MAXIMUM STRESS FOR SST AND PLUG
FOR ACCIDENT CONDITIONS

Component	Stress Type	Load Condition	Design Basis Pressure	Combined Stresses	Code* Allowable	NRC Comment
		STRESS LEVEL (ksi)				
SST tube		Seismic PWR BWR	PWR BWR	PWR BWR		
	Primary Bend Primary Membrane	0.82 1.14		0.9 1.2	1.5 Sa=20.7	Satisfactory
		Dropped Plug				
	Primary Membrane	PWR 51.7 to 60	0	51.7 to 60	1.2 Sa=16.6	Operation procedures must require inspection of SST for local damage following drop.

*Code Allowable Stress is for Section VIII. A site-specific application should compare against Section III.

exceeding the Code-recommended allowable stress for accident events. Such a provision is available in Section III Division 1 by resorting to Service Level D. This last consideration is important because all calculations provided by FW, as well as confirmatory hand calculations performed by the NRC staff show that the allowable stress as well as the yield strength are exceeded in the accident.

FW has presented calculations in an attempt to show that the following criteria are met: (1) the SST does not rupture, (2) any deformation of the SST does not affect adjacent SSTs, and (3) resulting vault floor loads do not exceed the compressive strength of the concrete. Each of these objectives are evaluated below.

The significance of the first objective, i.e., that an SST does not rupture following a drop accident, is primarily that the confinement barrier would be breached with resultant release of radioactive gases and particulate to the outside. Secondarily it is significant because there is no access to the vault floor, nor is there enough space between SST tubes to permit easy access to clean up debris from a broken IFA.

All of the calculations were based on dissipating the IFA kinetic energy by (1) a crushable shock absorbing member positioned between the SST base and the SST support stool, (2) modeling plastic strain of the lower portion of the SST, and (3) postulating buckling mechanisms of the IFA within the SST. The partitioning of the total kinetic energy after the impact between the IFA and the SST with the shock absorber cannot be accurately determined without empirically derived data showing how the spent fuel itself will deform and fail. Despite this lack of data, FW presented a bounding approach which the NRC staff accepts as conservative.

FW used the principal of conservation of momentum of the system before and after impact to determine the energy available to crush the shock absorber and deform the SST. The total available energy was partitioned into 70% to be dissipated into the SST shock absorber for the PWR case and 58% for the BWR case. The remaining 30% and 42% of the energies, for PWR and BWR cases respectively, were to be absorbed by diametral strain of the bottom six inches of the SST. Such a strain was postulated by considering that the IFA would disintegrate and collect as small fragments in the bottom

of the SST thereby exerting a uniform radial pressure. The bottom six inches of the SST was arbitrarily selected as the loaded length to simulate a worst case because there are (1) a weld joint, (2) a discontinuity of wall thickness, and (3) dissimilar materials in this region. Additionally, FW conservatively considered 33% instead of 30% for the available energy for the PWR case. Since the PWR case bounds the BWR case, only analyses for the PWR case were presented.

FW hand calculations showed a peak membrane stress of 39.2 ksi, which exceeds the Code allowable of 16.6 ksi. The plastic strain in the hoop direction was found to be 7.3% whereas the material has a minimum transverse strain of 20% at the ultimate tensile strength of the material. The NRC staff performed independent confirmatory hand calculations with similar assumptions and predicted a plastic hoop strain of 10.4%.

FW also calculated two different loading cases for the axisymetric finite element model using the plasticity solution capability of ANSYS ("ANSYS Engineering Analysis System User's Manual," Volumes 1 and 2, 1983). The results of the first model showed a peak combined membrane and bending stress of 43.5 ksi which is less then the minimum tensile strength of 55 ksi, but significantly higher than the 20.7 ksi Code allowable. However, the calculated hoop strain was 10.5%, which is half of the minimum possible strain of the material. These calculations did not conservatively select the bottom six inches of the SST as the loaded portion.

A second set of ANSYS calculations were made which did conservatively select the bottom six inches of the SST as the loaded area. The maximum strain was 12% for this case, although FW did not report the stresses. Other cases were also calculated which considered axial strain as well as hoop strain. Because this model is not as conservative as the hoop strain only model, the NRC staff does not find this particular model to be as useful in showing that the SST does not rupture. See Table 3.3.4.2-3 for a summary of all the data for this component.

Based on the plastic analyses provided in the TR and the hand calculations of plastic deformation made independently by the NRC staff, the staff finds that the preliminary SST design and materials specified for the design to be satisfactory for meeting the requirements of 10 CFR 72.72. The

TABLE 3.3.4.2-3

MAXIMUM STRESS FOR SST TUBE
FOR ACCIDENT CONDITION

		STRESS (ksi)				SST HOOP STRAIN (%)		
Component	Stress Type	Load Condition	Min Yield Strength	Min Tensile Strength	Code* Allowable Stress	Calc. Hoop Strain	Min Trans. Strain of Material	NRC Comment
SST tube	Case 1 Primary Membrane Hoop	Dropped IFA PWR 39.2	30	55	1.2 Sa =16.6	7.35(FW) 10.4 (NRC)	20	Hand calcs. show no SST rupture, but severe plastic deformation. Must inspect following drop.
	Case 2 Primary Membrane + Bend	Dropped IFA 43.5	30	55	1.5 Sa =20.7	10.5	20	Finite element elastic/plastic analysis shows no SST rupture.
	Case 3 Primary Membrane + Bend	Dropped IFA Stress not provided by TR	30	55	1.5 Sa =20.7	12	20	Finite element elastic/plastic analysis shows no SST rupture.

*Code Allowable Stress is for Section VIII. A site-specific application should compare against Section III.

fact that plastic deformation will occur will require using the recovery procedure.

From Table 3.3.4.2-3 it can be seen that the plastic hoop strain as calculated varies from 7.3% to 12% of the diameter. This large strain is significant because any diametral strain which exceeds about 1.4% of the SST tube diameter will prevent extraction of the damaged SST from the charge face structure liner tube. Thus the damaged tube would have to remain in the MVDS until it is decommissioned.

Section VIII Division 1 of the ASME B&PV Code does not provide for plastic design. The NRC staff recommends that FW consider the use of Section III Division 1 for the drop accident case because plastic deformation is a possibility in Section III, Division 1 under the Service Level D paragraph. If FW can accept this change in its stated design criteria, the NRC staff recommends that the preliminary SST design be accepted, as the calculations show that the SST will not rupture.

FW presented primary and alternate designs for an energy absorbing element positioned between the SST base and the SST support stool. Because of the lack of suitable analytical or any experimental data supporting the alternate design, the NRC staff does not accept this design as shown in the proprietary drawing A4-6.10 of the TR. Should experimental data showing force versus deflection characteristics of the alternative design be supplied as a part of a site-specific application, the NRC staff would evaluate such data.

The primary design as submitted by FW utilizes a stainless steel honeycomb product produced by HEXCEL. The energy absorbing properties of this material are well documented and considered to be acceptable by the NRC staff. The use of stainless steel will assure that the energy absorbing capability remains constant even if the air drawn in through the inlet duct carries corrosive substances such as salt.

Calculations performed by FW and confirmed independently by the NRC staff show that the HEXCEL shock absorbing ring is capable of absorbing 70% and 58% of the total available kinetic energy input for the PWR and BWR designs respectively. The crush distance was 52.4% and 45.2% for the PWR

and BWR designs respectively. These crush distances are less than the 60% allowed by the honeycomb manufacturer. The NRC staff has determined by calculation that the above evidence is satisfactory.

The pressure exerted by the honeycomb shock absorber on the SST support stool was calculated to be 3384 psi and 2363 psi for the PWR and BWR designs respectively. These compressive loadings are less than the 5000 psi compressive strength of the reinforced concrete vault floor. Thus this aspect of the design is also satisfactory. Table 3.3.4.2-4 shows the results of the data as presented by FW for the above cases.

FW also presented analyses for the SST support stool and the SST base casting. Table 3.3.4.2-5 presents this data design. The methodology for analyzing the SST base casting is inadequate because it is based on flat plate theory, whereas the thickness to diameter ratio of the casting is much higher than the ratio normally assumed for flat plate theory. Consequently the results are questionable. The NRC staff can accept the preliminary design contingent on a more suitable analysis such as FEM.

The final criteria for the integrity of the SST following an IFA drop involves the ability of the SST to resist large deformations which might affect adjacent SSTs. FW has postulated two loading cases for the SST. Both loading cases involve assumptions as to how the IFA will deform. Because there is little data about deformation kinematics of dropped fuel assemblies, the conclusions which can be drawn from the calculations are weak. However the NRC staff evaluated both calculations and considers the more extreme loading case to be conservative and certainly bounding. For this case it was assumed that 33% of the total kinetic energy must be absorbed by plastic bending of the SST. The calculation showed a maximum lateral displacement of the SST (PWR) to be about 4.7 inches which is less than the nominal clearance between SSTs (6.1 inches). Due to the conservative assumptions made by this calculation, the NRC staff finds that the SST will not affect adjacent SSTs.

3.3.4.3 Fuel Handling Machine and Its Bridge and Trolley

FW organized its analysis of the FHM and the bridge and trolley into three sections. They are: (1) the structural components of the FHMC or

TABLE 3.3.4.2-4

MAXIMUM STRESS FOR SST SHOCK ABSORBER
AND MVDS FLOOR ACCIDENT CONDITIONS

Component	Load Condition	Kinetic Energy Absorbed by Crush Element lb-ft.		% Crush Dynamic + Precrush		% Allowable Crush	Pressure on MVDS Floor (ksi)		Concrete Floor Allowable (ksi)	Comment
		PWR	BWR	PWR	BWR					
SST shock absorber	Dropped IFA into SST	24,290	8,023	52.4	45.2	60%	N/A		N/A	Design adequate with stainless steel honeycomb crush element
		PWR	BWR				PWR	BWR		
MVDS vault Floor	Dropped IFA into SST	24,290	8,023	N/A		N/A	2.36	3.38	5.0	Adequate

TABLE 3.5.4.2-5

MAXIMUM STRESS FOR SST SUPPORT STOOL
AND SST BASE FOR ACCIDENT CONDITIONS

Component	Load Condition	Stress Type (ksi)		Yield Strength (ksi)	Code Allowable	NRC Comment
SST support stool	Dropped IFA	Bending at center stool			ASME Section VIII Div 1	Adequate
	5000 psi assumed floor pressure	PWR	BWR			
		0.127	0.139	35	N/A	
	5000 psi assumed floor pressure	Bending at center of shock annulus			ASME Section VIII Div 1	Adequate
		PWR	BWR			
		0.330	0.527	35	N/A	
SST base casting	Dropped IFA	Bending case 1			1.5 Sa(.8)= 19.6	Flat plate theory is not applicable to the SST base. However, the NRC staff accepts preliminary design contingent on a FEM analysis for a site-specific application.
	5000 psi assumed floor pressure	PWR	BWR			
		23.7	20.6	35	(0.8 is casting quality factor)	
		Bending case 2				
		PWR	BWR			
		8.5	11.3	35		

*Code Allowable Stress is for Section VIII. A site-specific application should compare against Section III.

bridge and trolley, (2) the FHM, and (3) the components important to safety inside the FHM cavity. In general, FW did not address the three categories of loading conditions normal, off-normal, and accident. Instead FW tried to predict worst case loading conditions including seismic, with the thought that the TR is basically a preliminary, not a final design. Thus, FW has not completed all of the calculations required by NOG-1-1983 sections 4000, 5000, and 6000. The NRC staff has reviewed all of the design calculations supplied by FW, and presents an evaluation below.

Normal Operating Conditions for FHMC

The analysis provided by FW for normal operating conditions consisted of one loading condition and several deflection calculations. The bending moment stresses for three members in FHMC were all significantly below the NOG-1-1983 allowable stress for the material chosen. Similarly the deflections for three different sections were one to two orders of magnitude lower than the allowable deflection for dead load. While these parameters are acceptable under the criteria, FW has not completed all the necessary stress calculations for the trolley girt, bridge beam and bridge ties. Table 3.3.4.3-1 summarizes the results and shows which calculations have not been completed. Based on the analyses provided, the NRC staff finds that the preliminary design should be adequate once all the final design calculations have been made.

FW sized the wheels for the trolley and the bridge according to guidance provided in NOG-5452. The NRC staff finds that the sizes selected are conservative. Table 3.3.4.3-2 shows the results.

Accident Conditions for FHMC

FW analyzed for the only accident case required by NOG-4136 and 4140, which is the seismic case coupled with the dead loads. The mathematical model conformed with the requirements of NOG-4153.3, however FW did not perform all the loading conditions as specified in Table NOG-4153.7-1. Also, FW did not determine the maximum combined structural responses as specified in Table NOG-4153.7.2. However for a preliminary design it is evident that the design is conservative and should be adequate once all the final design calculations have been made.

TABLE 3.3.4.3-1

MAXIMUM STRESSES FOR FHMC
FOR NORMAL OPERATING CONDITIONS

Component	Stress Type/Load Type	STRESS (ksi)				
		Dead Wt. NOG-4131	Live Loads NOG-4132	Impact NOG-4133	Load Combinations NOG-4140	Allowable Stress
Trolley Girt (FHM Support)	Bending Shear	0.12 Not provided	Not provided	Not provided	Not provided	18.
Bridge main beam	Bending (hand calc) FEM Shear	1.54 4.26 Not provided	Not provided	Not provided	Not provided	18. 18.
Bridge end ties	Bending	0.07				18.
FHM support platform	Deflections	Calculated deflections at several points show deflections to be two orders of magnitude smaller than NOG-4340 allowable.				Acceptably stiff section
FHMC trolley load girt	Deflections	Calculated deflection for two normal operating load conditions show deflections to be two orders of magnitude smaller than NOG-4340 allowable.				Acceptably stiff section
FHMC bridge main beams	Deflections	Calculated deflections for two normal operating load conditions show deflections to be one order of magnitude smaller than NOG-4340 allowable.				Acceptably stiff section

TABLE 3.3.4.3-2

MAXIMUM LOADING FOR FHMC
FOR NORMAL OPERATING CONDITIONS

Component	Load Type	LOAD (lb.) Dead Wt. NOG-5452	Allowable Load	NRC Comment
Trolley wheel (24")	Bearing load	63102	88703	Acceptable wheel size
Bridge wheel (27")	Bearing load	67016	131640	Acceptable wheel size

In addition to the hand calculations, FW performed a finite element response spectrum analysis and a time history analysis of the overall MVDS with FHM. Both types of analyses were modeled with coarse mesh elements and therefore are not likely to give precise stress levels for the elements. However the stress levels were well below allowable stresses, demonstrating again that the design is conservative. Table 3.3.4.3-3 summarizes the results.

Tables 3.3.4.3-4 through 3.3.4.3-10 summarize the results of the stress analysis for various structural components of the FHMC. In most cases, the design is conservative. The criteria, assumptions, and methodology were generally appropriate for a preliminary design.

Even though FW restricted its initial analysis efforts to components in the critical load path, there were still a substantial number of mechanical elements analyzed. The NRC staff reviewers have shown the results of these analyses in the following tables. Rather than discuss each component, the NRC staff offers observations on a limited number of components, which may require additional detail design in order to comply with the specified NOG-1-1983 design criteria.

The analysis in Appendix A8.5 of the TR was found to be satisfactory with regard to determining bridge and trolley clamp loadings and providing assurance that the FHM does not overturn due to a seismic event. The analysis was performed using the clamping capability of proprietary spring/hydraulic calipers. FW has specified proprietary bridge and trolley restraining clamps (Goodyear Type SCL34) with proprietary ball joint mountings (SKF GE 80T with PTFE linings). Because the analyses are based on the ratings associated with these components, the NRC staff TR approval implies the use of these components or equivalent. By the same argument, FW must use the proprietary cap screw specified for the outer load frame to conform with the material specifications of HOLOKROME.

The FW analysis of the stresses in the outer load frame at the location for lower jaw pin appears to the NRC reviewer to be based on an incorrect cross section. In addition, the allowable stresses for the load frame material should be based on NOG-5474-2, which gives a maximum allowable tension stress of about 12.8 ksi. Although the allowable stress

TABLE 3.3.4.3-3

MAXIMUM STRESSES FOR FHMC
FOR ACCIDENT OPERATING CONDITIONS

Component	Stress Type/Load Type	STRESS (ksi) Dead Wt. NOG-4131	Seismic NOG-4136	Load Combinations NOG-4140	Allowable Stress	NRC Comment
Bridge beam	Bending	1.54	2.54	4.08	32.4	Although the stresses shown are well below the allowable stresses, not all load positions were calculated as per Tables NOG-4153.7-1 and NOG-4153.7-2
	Bending (FEM response spectrum)	Not shown	5.5	Not shown	32.4	
	Bending (FEM time history)	Not shown	5.9	Not shown	32.4	

TABLE 3.3.4.3-4

MAXIMUM STRESSES FOR FHMC
TROLLEY RESTRAINT CLAMP COMPONENTS FOR ACCIDENT CONDITIONS

Component	Stress Type/Load Type	STRESS (ksi) Seismic	Combined	Allowable	Code
Trolley clamp support bar	Bending	26.5		32.4	NOG-4311-1
Case 1	Shear	13.7		16.2	NOG-4311-1
	Comp	10.4		32.4	NOG-4311-1
Case 2	Bending	9.3		32.4	NOG-4311-1
	Shear	4.7		16.2	NOG-4311-1
			13.9	32.3	NOG-4321
Ball joint	Axial	67,800 lb.		426,900 lb.	Proprietary part
Ball joint pin	Bending	23.4		42.	NOG-4311-1
	Shear	8.7		21.	NOG-4311-1
	Combined shear		14.6	21.	NOG-4311-1
Mounting bracket	Bending	6.7		32.4	NOG-4311-1
	Shear	3.8		16.2	NOG-4311-1
	Combined shear		6.2	16.2	NOG-4311-1
Trolley clamp mounting bolts	Shear	7.5		21.1	NOG-4315-1
Mounting stool	Shear		3.1	16.2	NOG-4311-1
	Bending		2.0	32.4	NOG-4311-1
	Bending (weld)		5.3	18.	NOG-4314
Bottom flange	Shear (weld)		8.1	14.4	NOG-4314
Joint bracket	Shear (weld)		7.1	14.4	NOG-4314

TABLE 3.3.4.3-4 (Continued)

MAXIMUM STRESSES FOR FHMC
TROLLEY RESTRAINT CLAMP COMPONENTS FOR ACCIDENT CONDITIONS

		STRESS (ksi)			
Component	Stress Type/Load Type	Dead Load	Seismic	Allowable	Code
Trolley beam stiffener	Shear (weld)		4.8	14.4	NOG-4314
Seismic rail	Bending	0.2		22.5	NOG-4311-1
	Tension		7.1	22.5	NOG-4311-1
Support rail bolts	Bending		4.1	22.5	NOG-4311-1
	Shear		9.4		NOG-4311-1
	Tension		3.8	65.6	NOG-4323
Clamping bolts	Tension		13.0		NOG-4323
	Shear		4.6		NOG-4323
	Combined		13.8	57.7	NOG-4323
	Shear (thermal)		13.3	18.7	NOG-4315-1
Main bridge beam stiffener	Combined Tension		5.2	32.4	NOG-4311-1
Bottom flange			3.0	32.4	NOG-4311-1

TABLE 3.3.4.3-5

MAXIMUM STRESSES FOR FHMC
BRIDGE RESTRAINT CLAMP COMPONENTS FOR ACCIDENT CONDITIONS

Component	Stress Type/Load Type	STRESS (ksi) Seismic	Combined	Allowable	Code
Bridge					
Mounting bracket	Bending	8.4		32.4	NOG-4311-1
Mounting bolts	Shear	9.9		21.1	NOG-4315-1
Mounting stool	Comb. shear	4.1		16.2	NOG-4311-1
	Comb. bending	1.0		32.4	NOG-4311-1
	Bending/shear		4.2	16.2	NOG-4311-1
Beam stiffener	Shear (weld)	2.6		14.4	NOG-4314
Seismic	Shear	18.		21.1	NOG-4315-1
Rail Bolt	Tension	2.2		40.	NOG-4315-1
			18.	50.1	NOG-4323

TABLE 3.3.4.3-6

MAXIMUM STRESSES FOR FHMC
OPERATOR CABIN SHIELD WALL COMPONENTS FOR ACCIDENT CONDITIONS

		STRESS (ksi)			
Component	Stress Type/Load Type	Seismic	Combined	Allowable	Code
Shield Wall	Bending	0.4		32.4	NOG-4311-1
Bolts	Tension	8.7		82.8	NOG-5456.2
Thread	Shear	2.2		16.2	NOG-4311-1
Dowels	Shear	4.0		46.	NOG-4311-1

TABLE 3.3.4.3-7

MAXIMUM STRESSES FOR FHM BOLTS
FOR ACCIDENT CONDITIONS

Component	Stress Type/Load Type	STRESS (ksi) Seismic	Combined	Allowable	Code
Upper assembly bolt	Tension	59.9		85.	NOG-4221-1
		69.4		85.	NOG-4221-1
Lower shield bolt thread	Shear	3.2		18.8	
Flange	Bending	2.4		2.8	

TABLE 3.3.4.3-8

MAXIMUM STRESSES FOR FHM CAVITY COMPONENTS
FOR ACCIDENT CONDITIONS

Component	Stress Type/ Load Type	STRESS (ksi) 3x Max Rated Static + Dyn.	Combined	Seismic	Allowable	Code	Comment
IFA Grabhead							
Jaw pin	Bending	13.9	--	Not provided	28.5	NOG-5428.1	
(outer load frame)	Bending	1.4	--	Not provided	28.5	NOG-5474-1	
	Shear	4.9	--	Not provided	14.2	NOG-5474-3	
	Bending	--	16.4	Not provided	28.5	NOG-5474-1	
Jaw pin	Bending	26.95	--	Not provided	28.5	NOG-5474-1	
(carrier)	Bending	2.7	--	Not provided	28.5	NOG-5474-1	
	Shear	4.9	--	Not provided	14.2	NOG-5474-3	
	Bending	--	27.5	Not provided	28.5	NOG-5474-1	
Outer Load Frame							
Body	Tension	5.1		Not provided	12.8	NOG-5474-2	
	Shear	0.5		Not provided	7.2	NOG-5474-3	
Fillet	Tension	6.1		Not provided	12.8	NOG-5474-2	
	Shear	1.0		Not provided	7.2	NOG-5484-3	
Hole	Tension	12		Not provided	12.8	NOG-5474-2	
Jaw pin	Tension	22.3		Not provided	12.8	NOG-5474-2	Not acceptable
Jaw pin (NRC)	Tension	30.9		Not provided	12.8	NOG-5474-2	Not acceptable subject to final design analysis

TABLE 3.3.4.3-8 (Continued)

MAXIMUM STRESSES FOR FHM CAVITY COMPONENTS
FOR ACCIDENT CONDITIONS

Component	Stress Type/ Load Type	STRESS (ksi) 3x Max Rated Static + Dyn.	Combined	Seismic	Allowable	Code	Comment
IFA Grabhead							
Inner load frame tie pin	Tension	59.4	--	Not provided	76.5	NOG-5456-2	
Outer load frame cap screw	Tension	72.8	--	Not provided	135.	NOG-5456-2	Special proprietary material
Jaws	Bending	13.7	--	Not provided	20.2	NOG-5474-1	
	Tension	33.4	--	Not provided	17.3	NOG-5474-2	Jaws not acceptable subject to final design analysis
	Shear	5.8	--	Not provided	10.2	NOG-5474-3	
	Combined (B+T)	--	54	Not provided	20.2	NOG-5474-1	
	Combined (B+S)	--	18.1	Not provided	10.2	NOG-5474-3	
	Combined (S)		5.8	Not provided	10.2	NOG-5474-3	

TABLE 3.3.4.3-9

SAFETY FACTORS FOR HOIST SYSTEM
IFA SUSPENSION CHAINS

Safety Factor Loadcase	PWR	BWR	Required	Criteria
Rated	14.9	14.1	5.	NOG-5425-1a(1)
Critical	15.6	15.	5.	NOG-5425-1a(2)
Seismic	9.9	9.4	2.5	NOG-5425-1a(4)
Failure of single chain	3.5	3.7	2.5	NOG-5425-1a(3)

TABLE 3.3.4.3-10

MAXIMUM STRESSES FOR IFA HOIST COMPONENTS
FOR ACCIDENT CONDITIONS

Component	Stress Type/ Load Type	STRESS (ksi) Design Load	Seismic	Combined	Allowable	Code
Drive sprocket	Bending	1.8	1.0		18.7	NOG-5474-1
	Shear	1.2			12.	NOG-5474-3
	Shear	0.2	0.3		9.7	NOG-5474-3
Idler sprocket shaft	Bending	4.9	6.5		20.	NOG-5474-1
	Shear	0.7	0.9		10.2	NOG-5474-3
Idler support pin	Bending	18.1	23.9		24.1	NOG-5474-1
	Shear	2.1	2.8		11.9	NOG-5474-3
Idler housing bolts	Tension	10.4			20.	NOG-5474-2
	Thread shear	0.9	1.1		4.9	
Splined drive shaft						
(external teeth)	Shear	2.1			12.	NOG-5474-3
(pitch diameter)	Shear	3.3			12.	NOG-5474-3
(tooth side)	Compression	0.8			20.	NOG-5474-2
Splined drive shaft (internal teeth)	Tension	3.5	4.6		20.	NOG-5474-2
(shaft)	Shear	5.6	5.6		9.7	NOG-5474-3

TABLE 3.3.4.3-10 (Continued)

MAXIMUM STRESSES FOR IFA HOIST COMPONENTS
FOR ACCIDENT CONDITIONS

Component	Stress Type/ Load Type	STRESS (ksi) Design Load	Seismic	Combined	Allowable	Code
Drive shaft flex coupling						
(external teeth)	Shear	7.2	9.6		9.7	NOG-5474-3
(pitch diam.)	Shear	2.7			9.7	NOG-5474-3
(tooth side)	Compression	0.1			20.	NOG-5474-2
(internal teeth)	Tension	2.9			11.8	NOG-5474-2
Brake drum stub shaft	Shear	7.6	2.3		12.	NOG-5474-3
Drive unit support bolts	Tension	11.3	14.7		24.	NOG-5456.2
	Thread shear	1.	3.9		4.9	NOG-5474-3

is exceeded for the material specified in the preliminary design, the NRC staff can accept the design provided that additional analyses are performed and/or a stronger material is selected such that the design criteria for a final site-specific design is met. Table 3.3.4.3-8 shows the results for this particular part.

The grabhead jaws for the IFA hoist in the FW design are equivalent to the hooks described in NOG-1 Section 5428. In order to provide two load paths for the single failure proof requirement of Type I cranes, two jaws are used, each capable of supporting three times the critical load. The FW design satisfies NOG-5428 which stipulates that this load not cause "permanent deformation" (here interpreted as being below yield strength of the material), however, it does not meet the NOG-5474 requirements as designed and analyzed. The NRC staff can accept the preliminary design provided that additional analyses are performed and/or a stronger material is selected such that the design criteria for a final site-specific design are met. Table 3.3.4.3-8 summarizes the results for the grabhead jaws.

3.3.4.4 Transfer Cask Reception Bay Equipment

Transfer Cask Handling Crane

The transfer cask handling crane will be designed, constructed and tested to ANSI/ASME NOG-1-1983, Type 1 with single failure proof provisions. The crane will be capable of accommodating the dead, live and operating loads associated with the transfer cask handling operations and shall be capable of accommodating a safe shutdown earthquake (SSE). The NRC staff concurs that the transfer cask handling crane as identified in the TR will be acceptable.

Transfer Cask Trolley

In the absence of a specification unique to the transfer cask trolley, FW equated the trolley to a crane trolley and applied the relevant sections of ANSI/ASME NOG-1-1983 for design and evaluation of the trolley components. Safety classification Type 1 was selected. Allowable stress values for bending, tension/compression, and shear were obtained from ANSI/ASME NOG-1-1983 along with factors for impact loads, acceleration/deceleration loads

and seismic events.

Normal Operating Conditions

A number of analyses were performed to evaluate the effects of normal operating conditions on the transfer cask trolley. The main load bearing members of the trolley chassis were evaluated for the effects of live load (loaded cask), dead load (chassis components), and impact loads with respect to bending stresses, deflections and critical buckling stresses. The results of this analysis, summarized in Table 3.3.4.4-1, show that these stresses are well below the Code allowables.

An analysis was performed to evaluate the trolley wheel loads, bearing life, and axle bending stresses. The analysis results, summarized in Table 3.3.4.4-2, indicate that the trolley wheel, bearing, and axle loading are well below the NOG-1-1983 allowables. The NRC staff concurs with FW's conclusion that the main load bearing members of the trolley are satisfactory for normal operating loads. FW did not evaluate the effect of acceleration/deceleration loads on the trolley; however, the loads are bounded by the more severe seismic ground accelerations discussed in the "accident condition" section.

Off-Normal Conditions

One off-normal event evaluated by FW was the collision of the top of the transfer cask with the load/unload port (LUP). This postulated event could be caused by not elevating the LUP rising plug prior to moving the transfer cask under the LUP for IFA unloading. The analysis showed that the overturning moment applied to the cask and trolley as a result of the cask lip contacting the LUP, is well below the cask moment of stability. FW's conclusion was that the trolley drive system driving the cask against the LUP, could not overturn the cask and that either the motor cut-out would operate or the drive wheels would slip. The staff concurs with this conclusion.

Another analysis was performed to evaluate the results of an instantaneous arrest of the trolley while transporting the cask. For this evaluation, it was considered that the cask was not clamped to the trolley.

The analysis showed that in order for the cask to rotate to a position that it would overturn, the trolley velocity would have to be 193.2 ft/min. The maximum trolley transportation speed is only 20 ft/min., therefore, the cask will not overturn in the event of instantaneous-trolley arrest. The staff concurs with this conclusion.

Table 3.3.4.4-1 Maximum Stresses Transfer Cask Trolley Normal Operating Conditions

Component	Dead Weight (lb)	Live Load (lb)	Impact Load (lb)	Stress (psi) Bending	Stress (psi) Shear	Stress (psi) Compression	Allowable Buckling Stress (psi) Combined Shear and Compression	Allowable Buckling Stress (psi) Critical Shear	Allowable Buckling Stress (psi) Critical Compression	Allowable Buckling Stress (psi) Critical Combined Shear-Comp.	Safety Factor Combined Stress	Allowable Stress (psi) ANSI/ASME NOG-1-1983 Bending	Allowable Stress (psi) ANSI/ASME NOG-1-1983 Shear
I TROLLEY CHASSIS													
a. Main Load Bearing Channels	2698	48000 (Cask)	7200	4620	1706	1478	3158	20748	31641	35369	11.28	12500	7250
b. Transverse Frame (I Beams)	968	48000	7200	4468								12500	7250
c. Transverse Beams Between Beams in b.	968	48000	7200	4468	1080	1395	2334	24947	35708	40027	17.15	12500	7250

TABLE 3.3.4.4-2 MAXIMUM STRESSES TRANSFER CASK TROLLEY NORMAL OPERATING CONDITIONS

Component	Dead Weight (lb)	Live Load (lb)	Impact Load (lb)	Bending Stress (psi)	Bending Stress w/Conc. Factor (psi)	Wheel Load (lb/Wheel)	Allowable Wheel Load (lb/Wheel)	Bearing Life (hours)	Minimum Acceptable Life (hours)	Safety Factor	Allowable Bending Stress (psi)
II TROLLEY WHEELS	12000	48000	7200			15000	106927 ANSI/ASME NOG-1-1983			7.13	
III WHEEL BEARINGS	12000	48000	7200					344000 VENDOR DATA	5000 ANSI/ASME NOG-1-1983		
III WHEEL AXLES	12000	48000	7200	6173	18223						20000 ANSI/ASME NOG-1-1983

Accident Conditions

A number of analyses were performed by FW to evaluate the effects of a seismic event on the loaded transfer cask trolley. The FW design employs a clamping system to secure the cask to the trolley. The 7-inch deep 3-piece clamp engages the base of the cask and resists seismic acceleration loads and prevents the cask from overturning. The seismic ground accelerations considered for this evaluation were 0.25g in the horizontal x and y directions and a vertical acceleration of 0.17g.

An evaluation of the cask tipping moment, caused by the seismic ground accelerations, indicated that the cask must be secured to the trolley to prevent the cask from overturning. The FW clamp configuration was then evaluated to determine the loads that the clamp must accommodate.

The 3-piece clamp arrangement was analyzed for hoop, bending, bearing and shear stresses. The results, summarized in Table 3.3.4.4-3, show that the stresses on the clamp system are well below the ANSI/ASME NOG-1-1983 allowables.

The seismic loading on the combined transfer cask and trolley was then evaluated. To prevent seismic overturning of the transfer cask and trolley, the FW design employs seismic restraints at four corners of the trolley which engage seismic "rails" along both sides of the trolley pit. The loads induced into the seismic restraints as a result of the cask-trolley tipping moment were determined and the restraints analyzed for bending, shear, bearing, deflection and bolt stresses. The results, summarized in Table 3.3.4.4-3, show that the "restraint" stresses are well within the NOG-1-1983 allowables. The seismic rails along the trolley pit were also analyzed in the same manner and the results proved well within the NOG-1-1983 allowables as shown in Table 3.3.4.4-3.

The FW transfer cask trolley design is equipped with a roller system which guides the trolley along the rail system and also resists transverse movement of the trolley during a seismic event. The rollers were evaluated in terms of useful life and were found to be well within vendor allowables.

Table 3.3.4.4-3 MAXIMUM STRESS TRANSFER CASK TROLLEY ACCIDENT CONDITIONS

Loading Condition	Component	Dead Weight (lb)	Max Stress (psi)							Allowable Stress (psi)	Code
			Hoop	Bending	Bearing	Shear	Tensile	Impact	Combined		
I											
Seismic Loading, Cask Clamped to Trolley	Clamp Segments	Cask 48000	3416							85000	ASTM
				15369				30737		85000	A 148-73
					9109					85000	GR/05-85
(Seismic Accel: Horiz X = .25g Horiz Y = .25g Horiz Z = .17g)	Toggle Pivot Pin	48000		18798		5368			19550	112000	AISI 4340
II	Seismic "Restraints" on Trolley										
Seismic Loading Cask and Trolley	- "Restraints"	Cask and Trolley 48000 12000 60000		7936						12500	ANSI/ASME
					1318					12500	NOG-1-1983
						916				7250	
	- Bolts	60000					11700	23401		85000 (Proof)	ASTM-A-325
(Seismic Accelerations: Horiz X = .25g Horiz Y = .25g Vert. Z = .17g)	Seismic Rail on Pit Wall										
	- Rail	60000		5929						12500	ANSI/ASME NOG-1-1983
	- Bolts	60000					14326	29052		74000 (Proof)	ASTM-A-325
	- Rail Cleats	60000		3712						12500	ANSI/ASME NOG-1-1983

The results of the structural analysis show that the transfer cask trolley design will accommodate a range of normal, off-normal, and accident loads, in particular seismic ground acceleration loads. The NRC staff considers the trolley design acceptable under these loading conditions, however, the following two areas of design and analysis will require additional emphasis and evaluation when the site-specific MVDS configuration is submitted for a license review.

The TR describes a seismic restraint system mounted on the civil structure which engages the transfer cask trolley at the LUP. However, there are no illustrations or analyses of this system provided for staff evaluation. The staff concurs that, in principle, the restraint system as discussed is feasible, but supporting evidence must be made available for site-specific applications.

The transfer cask (TC), the TC handling crane, and the TC trolley are three major components protecting the integrity of the IFA against gross rupture during handling operations in the MVDS transfer cask reception bay (TCRB). The transport of the TC in a vertical position by the trolley from the road vehicle to the LUP is one of the more critical safety-related handling operations in the TCRB. The TC is first located at the preparation station where the outer closure is removed and the inner closure fasteners are removed. The TC is then transported by the trolley to the LUP with the TC inner closure held on only by its own weight. In the event that the TC were to overturn during this transfer, for any reason, the TC closure could fall off and the IFA could be ejected from the TC onto the TCRB floor. The fuel cladding could rupture due to impact, spreading fuel material and contamination about the TCRB. Exposure and contamination of personnel could be possible (manned access area) and recovery and clean-up would be difficult.

Although the TC trolley analyses indicate that the 3-piece TC clamping system will accommodate the normal, off-normal and accident loading conditions, the NRC staff considers the clamping method a potential "weak link" in the safety-related IFA handling operations. The TC handling crane is equipped with features to prevent a single failure from causing a dropped cask. The TC trolley should also provide a more positive and/or redundant method of securing the TC to the trolley to prevent an accident scenario as

described above. Providing support near the TC center of gravity is one approach. It would be near-impossible for the TC to overturn with this arrangement. If the clamping system is retained, a more positive method of securing the clamps other than the toggles should be considered. Operator error or component tolerances could cause an undetected loose clamp resulting in a overturned cask. A threaded locking arrangement of the clamps requiring torque-down may be considered. The NRC staff suggests that this area be given additional emphasis for a site-specific license submittal.

Load/Unload Port

In the absence of a specification unique to the load/unload port (LUP), FW designed the LUP using conservative acceptable stress levels appropriate to its function.

Normal Operating Conditions

An analysis was performed to determine the strength and deflection of the LUP jacking system support beams. The weight of the LUP plug to be lifting by the jacking system is 32950 lbs. It was assumed that the weight is shared equally by four jacks (814 lb. per jack). The resulting maximum stress in the beams was determined to be 3208 lb/sq. in. The maximum deflection in the beams was determined to be .015 inches. The analysis shows that the beams are adequate for the proposed loading.

An additional analysis was performed to determine the power required to operate the jacking system. The analysis showed that a 3 HP electric motor is required to operate the jacking system. The NRC staff concurs with the results of the LUP analysis.

Off-Normal Operating Conditions

No off-normal operating conditions were identified by FW for the LUP.

Accident Conditions

An evaluation was performed by FW to determine the effect of a LUP jacking system drive failure. It was determined that the work gear jacks are self-locking and will not lower of their own accord in the event of a drive failure. Only vibration was considered a probable cause of the jacks self-lowering. FW concluded that the configuration of the jacking system will not produce vibration sufficient to produce self-lowering. The staff concurs with this conclusion.

3.3.4.5 Transfer Cask Closure Modifications

Normal Operating Conditions

The only loads affecting the modified closure of the NLI 1/2 cask as a result of normal operating conditions are internal pressure loads. The modified cask closure is designed to be secured in the cask by the same number and size bolts as for the standard NLI 1/2 cask closure. The standard cask is capable of withstanding internal pressures based on a maximum ambient design temperature of 54 degrees C with a maximum fuel assembly heat load of 10.63 kw. The maximum heat load for the MVDS cask based on NUREG-5.4 data is 1.0 kw (1 PWR) with the same ambient temperature. Therefore, the MVDS heat load should produce lower internal pressure than the standard cask and the modified closure should easily accommodate the internal pressures. FW did not provide analysis for this loading condition, however the staff considers the closure modification acceptable for an internal pressure load.

Off-Normal Conditions

The only off-normal condition identified for the modified cask closure was the failure to vent the cask at the TCRB prior to removing the closure bolts. The results of the analysis showed that the increase in the cask internal pressure as a result of the IFA heat loads (PWR-1 kw and BWR-2x.23 kw), was not sufficient to lift the unbolted closure plug.

Accident Conditions

In order to demonstrate that the modified NLI 1/2 cask closure is capable of withstanding accidental impacts in comparison to the standard NLI 1/2 cask closure, FW offered an impact scenario. This accident would occur if the cask handling crane failed while the cask was being lifted to a vertical position of the transporter. The cask would pivot about the lower trunnion and "slap down" on the roadway, causing the IFAs to impact the underside of the closure.

A number of analyses were performed to determine the maximum stresses experienced by the modified closure bolts under the impact loads described above. The results showed that the resulting bolt stresses are well below the allowable stress of 62.5 ksi for ASTM A320 material obtained from ANSI/ASME NOG-1-1983. In addition, a retaining nut on the small shield plug on the BWR modified closure was evaluated under the impact loads. The analysis showed that the resulting thread shear stress was well below the ANSI/ASME NOG-1-1983 allowable. Finally, a comparison was made between the modified closure bolts and the standard closure bolts under the impact loads, considering both plain and wasted shank configurations. The results showed that the stresses in the modified and standard bolts are similar. The results of the above analyses, summarized in Table 3.3.4.5-1, indicate that the modified closure bolts are equivalent to the existing design in their ability to absorb impact energy. The NRC staff concurs with this conclusion.

Table 3.3.4.5-1 Maximum Stress Transfer Cask Closure Modification Accident Conditions

Closure Bolts				Bolt Config.		Impact Load		Dead Wt. (Closure)	Live Wt. (IFA)	Design Basis Press.	Design Basis Temp.	Max Stress		Allowable Stress ANSI/ASME	NOG-1
Modified		Existing		Waisted	Plain	Case (1)	Case (2)	(lb)	(lb)			Tension (KSI)	Shear (KSI)	Tension (KSI)	Shear (KSI)
PWR	BWR	PWR	BWR							N/A	N/A				
X				X		X		540	1550	N/A	N/A	26.8		62.5	
X				X			X	540	1550	N/A	N/A	42.7		62.5	
	X			X		X		672	1200	N/A	N/A	13.6		62.5	
	X			X			X	672	1200	N/A	N/A	24.8		62.5	
X				X		X		540	1550	N/A	N/A	26.8		62.5	
X					X	X		540	1550	N/A	N/A	26.7		62.5	
		X		X		X		837	1550	N/A	N/A	27.6		62.5	
		X			X	X		837	1550	N/A	N/A	29.7		62.5	
	X			X		X		672	1200	N/A	N/A	13.6		62.5	
	X				X	X		672	1200	N/A	N/A	11.4		62.5	
			X	X		X		837	1200	N/A	N/A	11.3		62.5	
			X		X	X		837	1200	N/A	N/A	12.1		62.5	
						X		167	600	N/A	N/A		1.43		32.5
BWR Closure Small Shield Plug Threads							X	167	600	N/A	N/A		2.60		32.5

Case (1) Load = Rotation of Cask to Horizontal

Case (2) Load = Instantaneous Inversion of Cask (Bounding Case)

4.0 THERMAL EVALUATION

4.1 SUMMARY AND CONCLUSIONS

The staff reviewed the Foster Wheeler MVDS thermal design and found it to be acceptable based on its conformance to the applicable sections for 10 CFR 72.72. The review centers on the ability of the design to maintain fuel clad temperatures well below 380 degrees C during normal conditions, and within that limit during accident conditions. The acceptance criteria for concrete temperatures cited by FW (ACI-216R-81 and ASTM 216R- 23) are not acceptable. Acceptable criteria (Nuclear Safety Structures Code, ACI-349-80, Section A.4) have been substituted by the staff. The limiting temperatures calculated by FW meet these substitute criteria. However, FW has determined only a local area maximum concrete temperature and an accident concrete temperature. The design is therefore acceptable provided FW demonstrates that the normal operation concrete temperatures do not exceed 150 degrees F. Limiting temperatures and temperature gradients used for structural and confinement integrity evaluations have been reviewed and found to be conservative. Acceptability of thermal loads and service life based on these limiting conditions is addressed in Section 3.0.

4.2 DESCRIPTION OF REVIEW

4.2.1 Applicable Parts of 10 CFR 72

Part 72.72(h) requires that the fuel cladding be protected against degradation and gross rupture. Part 72.72(b) requires that structures, systems and components important to safety be designed to accommodate the effects of, and be compatible with, site characteristics and environmental conditions associated with normal operation, maintenance and testing; and to withstand postulated accidents.

4.2.2 Review Procedure

The TR, including responses to staff questions submitted by FW, and annexed proprietary Technical Reports and Memoranda were reviewed to establish compliance with the applicable requirements of 10 CFR 72 cited

above. The review addresses adequacy of the natural draft cooling system to maintain fuel cladding temperatures within acceptable limits, and thermal-hydraulic aspects of the confinement system, civil structure, fuel handling machine, transfer cask, ventilation and off-gas system and gas service system designs. In light of the evaluation contained in the Appendix of the SER, only inert gas storage was considered in the thermal-hydraulic analysis review.

4.2.2.1 Design Description

The MVDS system consists of concrete vault modules with a steel and concrete charge face forming the top of the structure. Shielded Storage Tubes (SSTs) extend vertically downward from the charge face and are supported in a support stool attached to the vault floor. The vault module forms a natural thermosyphon by incorporating air inlet openings at a low level and a tall stack to form an outlet duct. Cooling air enters the vault modules through a screen-covered louvered opening. After flowing through a labyrinth, which provides radiological shielding, the cooling air flows across the bank of SSTs extending into the vault module. Heat is removed from the SST surface as the air flows across the SSTs toward the outlet stack. The tall outlet stack acts as a chimney to drive the natural draft flow. Heated air exits the stack which is covered with a concrete canopy, which like the inlet, is fitted with a wire mesh.

A steelwork charge hall encloses the charge face and provides the working area for a Fuel Handling Machine (FHM) which moves the fuel from the Transfer Cask Reception Bay (TCRB) to the SSTs. During storage of a fuel assembly in an SST, a carbon steel shield plug with two elastomeric O-ring seals is placed at the top of the SST. A charge face slab is placed over the shield plug. The gas service system which provides nitrogen cover gas to the interior of the SST is connected through the shield plug. Within the SST, heat generated by the stored irradiated fuel is transferred to the SST by radiation, conduction and convection flow of the cover gas.

An NLI 1/2 cask with modified lid seals is used to move the IFAs to the cask reception area. The IFA is lifted from the transfer cask into the FHM. The FHM is shielded and has natural draft cooling. Movement to the SST location in the charge hall is within the FHM. The FHM removes the

charge face slab and shield plug, and lowers the IFA into the SST. During insertion or removal of a fuel assembly from the FHM, i.e., when the FHM is connected to the transfer cask or the SST, the FHM depression system maintains the FHM internal cavity at sub-atmospheric pressure to prevent particulates from flowing out of the system.

Ventilation systems are also provided for the Sub Charge Face Volume and Charge Hall, Transfer Cask Reception Bay, Filter Rooms and Health Physics Control Station. The systems maintain the desired pressure gradients and insure that air flow is toward areas with increased contamination potential. Discharge of these systems is filtered and released to the atmosphere through a monitored ventilation stack.

4.2.2.2 Acceptance Criteria

Acceptance criteria listed in the Topical Report relevant to thermal analysis are peak fuel clad temperatures of 380 degrees C, which is used for both normal and accident evaluations. Based on information in Reference 1, this criterion may be acceptable for storage under normal conditions in an inert gas atmosphere. This is not addressed adequately for NRC staff to determine in the Topical Report. However, the actual maximum fuel clad temperature for a PWR assembly (1.0 KW) at an extreme ambient temperature of 54 degrees C is listed in the Topical Report as 200 degrees C. This is sufficiently below 380 degrees C to eliminate concern regarding storage under normal conditions for at least 20 years. Normal fuel clad storage temperature is estimated in the Topical Report (Section 4.2.5.1) at about 150 degrees C for an average 24 hour ambient temperature of 20 degrees C (Section 4.2.4.2). Higher peak fuel clad temperature limits are justified for accidents based on the information in Reference 2. Use of the 380 degrees C limit for accidents is conservative. Meeting these criteria for storage with an inert cover gas assures that the requirements of 10 CFR 72.72(h) are satisfied.

Acceptance criteria for maximum concrete temperatures of 100 degrees C for normal operation and 200 degrees C for accidents are also listed by FW. The basis for these criteria, ACI-216R-81 and ASTM 216R-23, respectively, are not acceptable. Criteria acceptable to the staff are contained in the Nuclear Safety Structures Code ACI-349-80, Section A.4. These acceptance

criteria are a bulk temperature of 150 degrees F, a local temperature of 200 degrees F for normal operation and a 350 degrees F temperature limit for accidents. This review of the thermal analysis also addresses the correctness of the calculated maximum temperatures and of temperature gradients used for input to structural evaluations.

Tables 4.2.2-1, 4.2.2-2 and 4.2.2-3 provide a list of design loads and design parameters for normal, off-normal and accident situations. Comments on the suitability of these parameters are included in the Tables.

It is noted that the thermal loads per assembly are acceptable at 1 kw per PWR assembly and 0.23 kw per BWR assembly. While the methodology is acceptable, any use beyond these limitations is subject to review. Also Figures 4.2.4-2 and 4.2.4-3 of the Topical Report are to be used for scoping purposes only.

4.2.2.3 Review Method

The thermal analysis of the MVDS system is supported by a considerable amount of experimental data submitted to support the design. The existence of such data to supplement and support the theoretical analysis gives sufficient confidence in the basic design to limit the need for independent calculations. Review effort was therefore directed toward establishing the applicability of data to the design and verification of consistency of the theoretical analysis.

Several computer codes were used in the thermal evaluations. The bulk of the analysis was performed using the MELTAN code, a derivative of the SINDA program (Ref. 3), a lumped parameter thermal analyzer widely used in the aerospace/defense sector. Other codes include DADS, a code written specifically to determine the magnitude of natural draft flow through the vault module, and COMMIX-1B (Ref. 4), a three dimensional fluid flow code developed by Argonne National Laboratory, used to analyze flow patterns within the vault module. Input and output for representative runs were reviewed for applicability of the model to the MVDS and reasonableness of results.

Table 4.2.2-1

DESIGN LOADS-NORMAL OPERATIONS

Component	Design Load Type	Design Parameters	Applicable Codes & Regulations	NRC Staff Comments on Suitability/ Restrictions
Structures/ Stored Fuel	Ambient Temperature	-29 deg. C to +38 deg. C	R.G. 7.8	Acceptable
Stored Fuel PWR BWR	Thermal Load	 <1 kw/assembly <.23 kw/assembly	NUREG 3.54	Acceptable. However, Figs. 4.2.4-2 and 4.2.4-3 of the TR cannot be used to establish acceptability of fuel for storage.
Concrete	Maximum Temperature	100 deg. C	ACI 216R-81	Not acceptable; 150 deg. F bulk and 200 deg. F local maximum from ACI-349-80 is an acceptable substitute.
Fuel Clad	Maximum Temp. in Nitrogen Cover Gas	380 deg. C	ANSI/ANS 57.9 -1984 Appendix H	Acceptable (See Section 4.2.2.2 of this SER. Actual fuel clad temperature was calculated at 150 deg C and is so low as to eliminate storage duration concerns under normal conditions.
SST Elastomeric Seal	Maximum Temperature	59.4 deg. C	--	Conservatively calculated
Fuel Handling Machine	Body Temperature	25 deg. C	--	Acceptable, calculated value
Transfer Cask Inner Seal	Maximum Temperature	76 deg. C	--	Acceptable, calculated value

TABLE 4.2.2-2

DESIGN LOADS - OFF-NORMAL EVENTS

Component	Design Load Type	Design Parameters	Applicable Codes & Regulations	NRC Staff Comments on Suitability/ Restrictions
Fuel Clad	Maximum Temp. in Nitrogen Cover Gas	380 deg. C	ANSI/ANS 57.9 -1984 Appendix H	Acceptable
Structures/ Stored Fuel	Extreme Temperatures	-40 deg. C low 54 deg. C high	--	Acceptable; site must satisfy restriction: no recorded temperature beyond these limits.

TABLE 4.2.2-3

DESIGN LOADS - ACCIDENTS

Component	Design Load Type	Design Parameters	Applicable Codes & Regulations	NRC Staff Comments on Suitability/ Restrictions
Civil Structure	Explosion and Fire	--	--	To be handled on a site specific basis
Structures/ Stored Fuel	Thermal	Ambient Initial Conditions for Accidents -29 deg. C to +38 deg. C	--	Acceptable
Fuel Clad	Maximum Temp. in Nitrogen Cover Gas	380 deg. C	ANSI/ANS 57.9 -1984 Appendix H	Acceptable
Concrete	Maximum Temp.	200 deg. C	ASTM 216R-23	Not acceptable; 350 deg. F from ACI-349-80 is an acceptable substitute
Concrete Walls	Crossfall Temperature Gradient			
	Vault dividing wall	20 deg. C/ft.	--	Acceptable for use in structural evaluations
	5' thick outlet wall	9 deg. C/ft.		
	18" thick outlet wall	14 deg. C/ft.		
	Floor	12 deg. C/ft.		

4.2.2.4 Key Design Information and Assumptions

Key assumptions made in the thermal analysis are as follows:

1. A single PWR or BWR fuel assembly is stored in each SST. Total heat generation is less than or equal to 1 kw for a PWR assembly and 0.23 kw for a BWR assembly.

2. For purposes of determining maximum local heat flux, an axial peaking factor of 1.35 is utilized.

3. Ambient temperatures of the external environment are assumed to range from -29 degrees C to +38 degrees C for normal operation and accident initial conditions. Extreme temperatures of -40 degrees C and +54 degrees C are considered as off-normal events.

4. The surface within 25 feet of the air inlet is assumed to be flat and free of obstructions. No buildings are located within 150 feet or twice the adjacent building height from the inlet.

4.3 DISCUSSION OF RESULTS

It is convenient to consider the various system components and their performance under normal, off-normal and accident conditions. While there is interaction between the thermal performance of the various components, organization by component represents a reasonable approach to presenting the review results.

4.3.1 Civil Structure

The civil structure is a large building designed to promote natural thermosyphon cooling air flow through a bank of vertical tubes (SSTs). Experimental results were obtained on a 1/4 scale test apparatus with 16 rows of electrically heated tubes simulating the SSTs. Tests were performed with heat fluxes of 0.24 to 0.75 kw per tube and Reynolds numbers encompassing the range of values expected for the actual MVDS. Results of a series of runs were used to develop an empirical heat transfer correlation for the tube bank, to establish a relationship between the peak axial

storage tube temperature and the mean tube temperature (1.50 ratio of peak to mean) and to verify flow aspects of the MVDS design.

The DADS computer code was used to analyze the 1/4 scale test results. This comparison of DADS results to test data served to benchmark DADS for use in the MVDS design analysis. The staff concurs that the use of DADS with the conservatisms listed on page A4.1-22 of the Topical Report is appropriate for both PWR and BWR MVDS design analysis.

Further validation of the DADS methodology was obtained by comparison with 2-dimensional fluid flow and heat transfer calculations performed using the COMMIX-1B computer code. Two normal operation cases were analyzed using COMMIX-1B, a fully loaded vault module and a last row only loaded case. COMMIX-1B provides a best-estimate analysis, and as expected, the DADS results were conservative compared to COMMIX-1B in the sense that DADS predicted higher mean and peak SST surface temperatures. An additional observation from the COMMIX-1B results is that no adverse flow patterns, such as local recirculating flows, were predicted.

Both the DADS and COMMIX-1B analyses are steady-state. Transient MVDS behavior was simulated using the MELTAN code. Again both fully loaded and single row cases were run. Results of the analyses show that no temperature excursions occur beyond steady-state values at the upper ambient air temperature with a fully loaded MVDS. Response to off-normal (air inlet blockage) and accident (partial blockage of outlet duct and complete blockage of all ducts) conditions were also analyzed using the MELTAN code.

Due to the large inlet and outlet flow areas for the MVDS, this design has a low probability of blockage. This is further enhanced by the inlet design in which the air is drawn upward through the wire mesh screening. Analyses performed demonstrate that this design is tolerant to partial blockage with fuel clad temperatures remaining well within the acceptance criteria. An analysis of total inlet blockage was performed which assumes flow into one outlet duct and out of the outlet duct of an adjoining module. The staff does not concur that this is a suitable design analysis since for this situation the basic mechanism of natural draft cooling relies on a random process to establish the cooling mode. However, FW has demonstrated that the large thermal inertia of the MDVS allows a minimum of five days

before the 380 degrees C maximum fuel clad temperature limit is approached. Therefore, adequate time is available to identify and clear a total inlet blockage.

FW has used conservative methods to estimate the maximum concrete temperature adjacent to an SST. The methodology assumes a 1.5 axial peaking factor and conservatively high radiation heat transfer from the SST surface to the concrete. Heat transfer from the concrete wall is only by convection to the air flow. The staff concurs that the 87.4 degrees C calculated as the peak local concrete temperature for normal operation is conservative. This temperature also satisfies the substitute acceptance criteria of ACI-348-80 of less than 200 degrees F (93.3 degrees C) local maximum concrete temperature.

The applicable code also requires that, except for local areas, concrete temperatures do not exceed 150 degrees F. The applicant has not demonstrated that this condition is satisfied. The design is therefore acceptable provided that this criteria is shown to be met.

Maximum concrete temperatures and maximum gradients for off-normal and accident conditions are determined from the completely blocked inlet case. While the staff does not consider this case to be amenable to analysis, the temperature and temperature gradients bound those for other analyzable cases and are therefore acceptable for use. The 112 degrees C maximum concrete temperature is less than the 350 degrees F (176.7 degrees C) acceptance criteria.

To demonstrate that wind conditions would not adversely affect air flow through the MVDS, FW conducted wind tunnel tests on a scale model of the MVDS. Certain design features, such as spoilers on the outlet, were added as a result of these tests. The staff concurs that these tests provide reasonable assurance that the cooling air flow will not be adversely affected by wind conditions provided that the stated conditions on neighboring buildings and inlet obstructions are satisfied.

4.3.2 Shielded Storage Tube

A full scale 16 x 16 PWR electrically heated bundle was tested in a storage tube configuration to establish the relationship between SST surface temperature and peak fuel clad temperature. The storage tube was subject to air crossflow cooling during the test to simulate behavior within the MVDS. Results of these tests yield a relationship between peak fuel rod temperatures and peak SST temperatures. A MELTAN computer model was used to extend these results to BWR fuel assemblies. Both radiation and convection processes within the bundles and storage tubes were considered. The approach was validated by application to a PWR bundle where experimental data were available. As a part of this analytical effort, a radiation only heat transfer model was developed. This model was used to predict fuel temperatures for vacuum operations, i.e. evacuation of the SST prior to nitrogen backfill. The staff finds the methodology for determining fuel temperatures from SST surface temperatures acceptable.

In response to a question from the staff, FW provided information on the maximum normal operating temperature of the elastomeric seal on the shield plug. At 38 degrees C ambient temperature, the region of the elastomeric seal was estimated to be 59.4 degrees C. This is an acceptably conservative estimate of the seal temperature.

The accident situation of an IFA dropped into one SST was analyzed by increasing the linear heat rate by 10% to account for rod distortion. With this increased heat rate, a radiation only model of the bundle and SST was used to conservatively determine the peak fuel clad temperature as 250 degrees C. This is below the acceptance criteria of 380 degrees C and is therefore acceptable.

4.3.3 Fuel Handling Machine

The MELTAN computer code was used to analyze both normal operations and accident situations with an IFA stuck part way through the charge face. Analysis was performed with a 1 kw PWR assembly which clearly bounds the BWR case. Results show that the normal operating peak fuel closed temperature is 125 degrees C and that the normal steady-state FHM body temperature is 25 degrees C. Should the IFA remain in the FHM beyond the normal three hour

period, analysis was performed to show that the peak fuel clad temperature will rise to 155 degrees C over a 10 day period which is well below the limiting temperature.

The accident condition of a stuck IFA was analyzed in both steady-state and transient modes. The peak fuel clad temperature was calculated to be 221 degrees C in the steady-state mode. Transient results show that a fuel clad temperature rises to 200 degrees C over a ten hour period. These temperatures were calculated using a conservative model and meet the acceptance criteria.

4.3.4 Transfer Cask

An analysis was performed of the seal lid modification based on an extension of results obtained in the original NLI 1/2 analysis. The maximum temperature of the inner seal ring, which was replaced in the seal lid modification by an elastomeric seal, is 76 degrees C. The maximum outer head seal temperature is 68 degrees C. These values were conservatively determined.

The accident case of failure to vent the cask before unbolting was analyzed to determine the maximum temperature rise required to lift the closure. A 24 degrees C temperature rise is required. This is accepted as a conservative calculation of the minimum temperature rise.

4.3.5 Gas Service System

Only the nitrogen system was considered in light of the evaluation of the Appendix of this SER. A pressure bandwidth of 1.25 to 3.25 psig allows for a temperature variation of 31 degrees C in the ambient temperature. Leak detection is provided. System loss coefficients were calculated by the applicant, but these were not reviewed in detail since they are not relevant to the safety performance of the system.

REFERENCES

1. M. W. Schwartz and M. C. Witte, "Spent Fuel Cladding Integrity During Dry Storage," VCID-21181, September 1987.

2. A. B. Johnson, Jr. and E. R. Gilbert, "Technical Basis for Storage of Zircaloy - Clad Spent Fuel in Inert Gases," PNL-4835, September 1983.

3. J. P. Smith, "SINDA User's Manual," Cosmic Program # MSC-13805, prepared under NASA Contract 9-16435, April 1971.

4. Argonne National Laboratory, "COMMIX-1B: A Three-Dimensional Transient Single-Phase Computer Program for Thermal-Hydraulic Analysis of Single and Multicomponent Systems", NUREG/CR-4348, ANL-85-42, September 1985.

5.0 CONFINEMENT BARRIERS AND SYSTEMS

This chapter evaluates the suitability and integrity of three systems which contribute to the confinement barriers for the MVDS. These systems are identified in Table 3.3-1 of the TR as being important to safety. They include the: SST plug O-ring seal, the cover gas services, and the ventilation and off-gas systems. The review procedure involved evaluation of all relevant portions of the TR including various appendices and comparison of the design with the design criteria.

The FW TR has proposed two cover gas systems for use in the SSTs. These systems differ very little as far as the actual mechanical and gas system components are concerned, but they differ fundamentally as far as the composition of the actual cover gas is concerned. One proposed system incorporates the essentially inert gas nitrogen whereas the other system uses dry air. The oxygen in the air is potentially reactive with the irradiated uranium dioxide fuel in defective fuel rods. The TR has addressed the problem, and this SER has evaluated it in the Appendix. The conclusion of the NRC staff reviewers is that FW has not made a satisfactory case to justify using dry air as a cover gas. Nitrogen, on the other hand, is inert under the conditions of storage and is therefore considered to be satisfactory for meeting the requirements of 10 CFR 72.72(h).

5.1 SUMMARY AND CONCLUSIONS

The staff has reviewed the features of the MVDS system which provide confinement of the protective nitrogen gas storage tube atmosphere. The review was primarily directed at establishing the level of confidence in the predicted lifetime of the elastomeric O-ring seals which separate the nitrogen gas from the environment. The projected leak rate under expected normal and off-normal conditions was also evaluated.

As a result of this review the staff concludes that at the present time the available information is not adequate to support a high level of confidence in a 20 year lifetime for the O-ring seals. This conclusion is based on : 1) identified weakness in the technical analysis supporting the 20 year lifetime, 2) contradictory evidence in the referenced data and 3)

the uncertainties associated with variables whose effects are difficult to analyze. Weaknesses in the technical analysis include neglecting the influence of radiation and extrapolation beyond the range of data for quantification of temperature effects. Evidence in the referenced material supports the TR analysis for high temperature un-irradiated conditions but is inconsistent with the analysis predictions for low temperature, irradiated or humid conditions. Some processes, such as synergistic effects of oxidation and radiation exposure, and some variables, such as water vapor present due to off-gassing of the concrete, introduce uncertainties which can not be quantified at this time. Consequently, the staff recommends that a 5 year lifetime of the O-rings seals be selected and that this service life be verified through testing during operation of the MVDS facility.

The staff has also reviewed the nitrogen cover gas system for use in the SSTs and finds the design to be satisfactory for all conditions.

The NRC staff has also evaluated the FW design of the ventilation and off-gas systems. The staff concurs with the design criteria and methodology which were presented in the TR. However, based on operational engineering experience with handling spent fuel assemblies, the NRC staff recommends that FW consider enhancing the following design areas for a site-specific application:

1. Provision of a spare inlet fan for the ventilation system to prevent contaminant spread.

2. Provision of an automatic exhaust fan changeover system to minimize time delay.

3. Provision of an inlet for interlock to shut it down in event of exhaust fan failure.

4. Provision of alarms to indicate fan failures in addition to lamps.

5. Continuous air monitor in transfer cask preparation area during operations.

6. Inspection of flexible vent line for defects prior to each use.

5.2 OVERALL DESIGN DESCRIPTION OF CONFINEMENT BARRIERS AND SYSTEMS

The MVDS confinement barriers and systems must confine potential contamination that may arise from the IFAs during transfer to the MVDS, during IFA receipt, transfer and handling within the MVDS and during subsequent long-term IFA storage in the SSTs. The primary confinement barrier for the escape of contamination from the IFA is the fuel clad. The balance of the MVDS confinement barriers and systems along with the associated IFA operations are discussed below.

During IFA transfer and receipt at the MVDS, the confinement is provided by the transfer cask (TC). The components of the TC that are of concern to the MVDS are the modified cask inner closure and associated elastomer seals. The balance of the TC is site-specific.

During TC preparation activities in the TCRB for subsequent closure removal, the TC internal pressure is released by means of the TC off-gas system. During this operation, the off-gas system becomes part of the confinement barrier systems.

During IFA transfer from the TC to the FHM, confinement is provided by the combined envelope of the TC, the load/unload port (LUP) and the FHM. During this transfer operation, a self-contained FHM system maintains a depression in the internal volumes to prevent any migration of particulate contamination from the FHM to the charge hall. The depression system flow is passed through a primary filter and two HEPA filters before being discharged into the charge hall. The depression system is part of the confinement barrier systems.

During IFA transfer in the FHM from the LUP to the SST, the sealed FHM cavity and the FHM depression system described above, provide the confinement.

During IFA transfer from the FHM to the SST, confinement is provided by the combined envelope of the FHM and the SST. The FHM depression system is in operation as described above for the TC-FHM IFA transfer and becomes part of the confinement barrier system.

After the IFA is inserted into the SST, the SST is closed with a shield plug fitted with elastomer seals. The SST is connected to the gas services system by means of a service point valve. After shield plug installation, the SST is connected to a self-contained FHM vacuum system by means of a service tool engaged with the service point valve. The vacuum system is initially utilized to perform a vacuum-decay leak check on the SST. Then, utilizing the vacuum system, the service point valve and the gas services system, a low-level oxygen environment is established in the SST by a series of vacuum-nitrogen purge cycles. The FHM, vacuum system and service tool are removed, leaving the sealed SST connected only to the gas services system. During this initial establishment of the SST environment, the SST and its shield plug, the service point valve, the service tool, the vacuum system and the depression system provide the confinement barriers and systems.

The gas service system supplies, controls, and maintains the nitrogen cover gas in the SST during long-term IFA storage. During IFA storage in the SSTs, the cover gas (maintained by the gas services system) and the maximum fuel temperatures (dictated by the MVDS passive cooling system), prevent degradation and gross rupture of the IFAs. The gas services system is comprised of a nitrogen system and a fixed pipework system connected to the SST via the service point valve. The nitrogen gas is supplied to the SSTs from compressed gas cylinders at a nominal 1.25 psig and limited to 3.25 psig maximum by a relief system. Nitrogen vented from the relief system passes to the ventilation stack via HEPA filters. An exhauster system is incorporated into the system as a backup to the FHM depression system during SST loading operations. Therefore, during long-term storage of the IFAs, the SSTs with their shield plugs and the gas services system, comprised of the service point valves, the pipework, HEPA filters, flow meters, etc., provide the necessary primary containment for the IFAs.

Further protection by confinement barriers and systems and achievement of ALARA in the MVDS is provided by the ventilation and off-gas system. The ventilation system provides for confinement of potential contamination that

may arise during the MVDS normal, off-normal and accident operations. The ventilation and off-gas system is provided in the MVDS to:

1. Maintain areas at the desired positive and negative pressures.

2. Maintain an air flow pattern within the facility that is always from a less contaminated to a more contaminated region.

3. Provide ventilation for the areas intermittently occupied by operators, when an uncontrolled contamination release hazard may exist.

The TC off-gas system, described for the TC preparation activities above, is exhausted into the ventilation system.

5.3 DESCRIPTION OF REVIEW

5.3.1 Applicable Parts of 10 CFR 72

Paragraph (1) of Section 72.72(h) of 10 CFR is pertinent to storage of spent fuel in the MVDS. It requires that the "fuel cladding shall be protected against degradation and gross rupture." Paragraph (3) of the same section is applicable to the MVDS design. It requires that ventilation and off-gas systems be provided where necessary to confine airborne radioactive particulate materials during all conditions.

5.3.2 Review Procedure of SST Seal System

5.3.2.1 Design Description

The MVDS system maintains an inert nitrogen atmosphere in the fuel assembly shielded storage tube (SST). This atmosphere is contained by elastomeric O-ring seals mounted in grooves machined in a plug which is inserted into the top of the SST. The plug design incorporates a metal filter into the plug body. The tube design incorporates a gas distribution connection which is located in the tube wall at a height between the elevations of the two O-ring seals. The lower O-ring seals the storage space so that gas exiting the tube must pass through the filter. The upper O-ring

provides the primary confinement separating the storage space and fuel assembly from the environment. Following insertion of the fuel assembly and shield plug, the SST is pumped to a 20 mbar vacuum and leak-tested over a thirty minute period. The SST is then filled with nitrogen and the vacuum leak test is repeated. Following this test the SST is again filled with nitrogen to the nominal operating pressure (2 psig) and monitored for pressure and flow over the operating life of the facility (20 years).

5.3.2.2 Acceptance Criteria

The seal system design will be found acceptable if the TR demonstrates that there is a high likelihood that the elastomeric O-ring seal will maintain the inert nitrogen atmosphere at the design leakage rate for normal and off-normal conditions over the twenty year life of the facility. Failure of the seal will be considered to have occurred if the pressure drop across the seal exceeds the contact stress level existing within the seal. Initial compression of the seal produces an internal stress level greatly in excess of the pressure drop but this internal stress declines gradually with time as the seal experiences compression set or loss of resilience. Since the design pressure drop across the seal is low (i.e., 1.25 to 3.25 psi) the failure condition corresponds to complete loss of resilience or 100 % compression set. The design criteria for the O-ring are shown in Table 5.3.2-1 and 5.3.2-2. The NRC staff finds the criteria acceptable for the preliminary design with the exception of the ACI-216 R-81 Code for concrete temperature. The acceptable Code is ACI-349-80.

5.3.2.3 Review Method and Discussion of Results

The review of the TR is primarily directed at determining the service life of the elastomer O-rings under the normal operating conditions of radiation exposure and elevated temperature. The review of by-pass and permeation leak rate, including independent estimation, indicates that if a small fraction of the initial sealing stress is maintained the seal will function adequately.

The TR presents analysis and supporting data intended to demonstrate that the dimensions and characteristics of the VITON E60C seal are such that a state of compression adequate to seal the SST exists for twenty years. The

TABLE 5.3.2-1

DESIGN CRITERIA - NORMAL OPERATING CONDITIONS

Component	Design Load or Characteristic	Design Parameter	Applicable Codes/Regs.	NRC Staff Comments On Suitability/ Restrictions
Shield Plug Seals	Seal integrity	Seal lifetime: 20 years		NRC defines seal failure as 100% compression set for low pressure.
	Pressure	1.25 to 3.25 psig		Verified in SER.
	--	N-2 gas purity: O-2<150 ppm		
	Thermal	Ambient temperature range: -40 deg. C to 54 deg. C	Reg. Guide 7.8	Acceptable
	Thermal	Concrete temperature: 100 deg. C	ACI 216 R-81	Not acceptable criteria. ACI-349-80 is acceptable.
	Vacuum	Leak test vacuum decay rate: 20 mbar to 30 mbar over 30 min.		Verified in SER.
	Vacuum	Allowable leak rate: 10E-2 cubic cm/sec		
	Thermal	Fuel temperature: 380 deg C	ANSI/ANS 57.9-1984	Acceptable, normal clad temp. calculated to be 150 deg C.
	Radiation exposure	Seal integrated dose: 3.97E4 Rad		Verified in SER.
	Radiation exposure	Seal maximum dose rate: 2.7E4 Rad/hr		Verified in SER.

TABLE 5.3.2-2

DESIGN CRITERIA - OFF-NORMAL OPERATING CONDITIONS

Component	Design Load or Characteristic	Design Parameter	Applicable Codes/Regs.	NRC Staff Comments On Suitability/ Restrictions
Shield Plug Seals	Pressure	Maximum pressure: 5.25 psig		Verified in SER.
	Pressure	Tornado conditions: maximum delta p of 3.0 psi at rate of 2 psi/sec	Reg. Guide 1.76	Acceptable
	Pressure	Minimum internal pressure: 20 mbar (0.29 psia)		Verified in SER.
	Seismic	Horizontal ground acceleration: 0.25g Vertical ground acceleration: 0.17g	Reg. Guide 1.60 and 1.61	Acceptable
	Thermal	Maximum fuel temperature: 380 deg C	ANSI/ANS 57.9-1984	Acceptable max. temp.
	Thermal	Concrete temperature: 200 deg. C	ACI 216 R-81	Not acceptable criteria. ACI-349-80 is acceptable.

major element of the analysis is the prediction of compression set of the seal in the presence of radiation. The TR analysis utilizes an experimental data based correlation of compression set, radiation exposure rate, temperature and time (Ref. 1). The correlation is based upon data obtained at radiation exposure rates of 0.0, 0.01, 0.1 and 1.0 Megarad/hr and temperatures of 150, 200, 250 and 275 degrees C. Compression set is plotted against time for the four radiation exposure rates and the effect of temperature is incorporated by applying a time shift factor to adjust the abscissa of the compression set versus time correlation. The time shift factor is correlated with reciprocal temperature for each of the four radiation exposure rates. Application of the correlation for prediction of compression set is complicated by the need to interpolate between radiation exposure levels (i.e., 0.0 and 0.01 Mrad/hr) to the condition projected for MVDS facility (i.e., 175 millirad/hr) and by the need to extrapolate outside the temperature range of the supporting data (i.e., 150 to 275 deg C) to the temperature expected at the MVDS facility (i.e., 55 deg C). The TR analysis addresses these issues by assuming that the effect of radiation at the design level is negligible and by adopting a linear extrapolation to estimate the behavior at the design temperature. A rationale or identification of a physical mechanism supporting this approach is not advanced in the TR even though the supporting data clearly show non-linearities in the dependence of compression set on radiation exposure rate and of time shift factor on reciprocal temperature. The primary result of the TR analysis is the prediction of compression set as a function of time with 20 year compression set of 48.3 and 16.0 per cent at 55 and 20 degrees C, respectively.

The TR presents data from three additional sources (Ref. 2,3,4) to demonstrate that predictions of the compression set correlation are conservative. The first of these references (Ref. 2) presents short-term compression set experimental data for VITON for a number of temperatures above 149 degrees C under un-irradiated conditions. Correlation predictions of compression set for comparable conditions exceed the reported experimental values supporting the premise that the correlation prediction is conservative for these conditions. The second of these references (Ref. 3) presents long-term experimental data for 19 types of 6 groups of elastomers. VITON was not tested. The samples were tested at moderate temperatures (i.e., 15 to 30 degrees C) with no radiation exposure and

moderate to high relative humidity (i.e., 39 to 76 %). The TR utilizes this data to demonstrate that the rate of development of compression set varies with time with the short-term rate exceeding the rate measured in the long-term. The TR does not note that the reported long-term compression set values exceed values predicted by the correlation in all cases. The precision of control of temperature and relative humidity in this set of experiments was not adequate to quantify the influence in variation of compression set with these variables. The third of these references (Ref. 4) presents experimental data of compression set of VITON E60C as a function of time, radiation exposure rate, temperature and humidity condition. The TR refers to compression set/time data for un-irradiated samples in dry condition at 80 degrees C and compares this to correlation predictions. The predicted compression set exceeds the experimental values supporting use of the correlation for these conditions. The TR does not refer to data presented in this reference for irradiated dry, un-irradiated wet (i.e., in the presence of water vapor) or irradiated wet conditions. These data when compared with correlation predictions do not support the premise that the correlation predictions are conservative.

In the absence of a mechanistic understanding that allows confidence in extrapolation the staff recommends use of experimental data under conservative conditions most nearly approximating those expected at the MVDS facility for preliminary determination of service life. This approach and data for VITON E60C collected in the presence of water vapor at radiation exposure rate of 8600 rad/hr and temperature of 80 degrees C (Ref. 4, Fig 7) lead to the selection of a 5 year O-ring service life.

5.3.3 Review Procedure of Gas Services System

5.3.3.1 Design Description

The Gas Services System as identified in the FW Topical Report provides two modes of operation; an "air mode" and a "nitrogen mode." However, the NRC staff has not accepted air for a cover gas environment. It is anticipated by the staff that the HEPA filter system and depression system, currently identified as part of the air system, would have to be retained by the nitrogen-only system. This approach would assure proper filtration of the vent gases and a suitable system depression with respect to the charge

hall to prevent the escape of contamination in the event of a system leak. The following discussions will address the nitrogen system analysis and the air system analysis for those components that may become part of the nitrogen system.

5.3.3.2 Acceptance Criteria

The design criteria for normal operations, off-normal operations, and accident conditions for the gas services system were defined in several sections of the TR. They have been summarized in Tables 5.3.3-1, 5.3.3-2, and 5.3.3-3 of this SER. The NRC staff has reviewed these criteria and finds them suitable for the preliminary design.

5.3.3.3 Review Method and Discussion of Results

Normal Operating Conditions

In order to size components and evaluate system performance, the gas services system was analyzed for flow resistances, SST pump down time, time to backfill SST with nitrogen, effects of diurnal temperature transients, and total nitrogen usage rates.

The initial analysis was performed to determine the flow resistance of various components of the gas services system including the shield plug, the service point valve, the system pipework, the HEPA filters, and the flow meters. The pipework was sized to assure a suitable system depression in the event of a system leak (referenced in the TR). Some of the analysis was performed for the air system, however, the resistance would be identical for operation in air or nitrogen.

An analysis was performed to determine the time to pump down an SST to 20 mbars considering conductance of vacuum system components and the various levels of vacuum pressure. The approximate SST pump down time was determined to be 6.36 min.

After an SST is evacuated, the SST is backfilled with nitrogen. An analysis was performed to determine the maximum backfill time for an SST at the furthest location of a five module MVDS. Considering choked flow

TABLE 5.3.3-1

DESIGN CRITERIA - NORMAL OPERATING CONDITIONS

Component	Design Load or Characteristic	Design Parameter	Applicable Codes/Regs.	NRC Staff Comments On Suitability/ Restrictions
Gas Services				
Nitrogen Supply	Purity	Oxygen: <5ppm Water: <3 ppm Other oxidizing agents: <0-2 ppm limit	N/A	
Nitrogen System	Design basis internal press.	Nom. press: 1.25 psig + or - 0.25 psig Max. press: 3.25 psig + or - 0.25 psig	N/A	
		Construction matl. allowables	Associated ASME and ASTM Specs.	Acceptable
	Ambient temp.	Max: 54 deg. C Min: -40 deg. C	Reg. Guide 7.8	Acceptable
HEPA Filters	Allowable press. drop	1 to 4 in. W.G.	N/A	
	Rated flow	125 CFM	N/A	
Flow Meters	Flow rate	50 liters/min	N/A	
FHM Depression System	Flow rate	= or > 350 CFM	N/A	

TABLE 5.3.3-2

DESIGN CRITERIA - OFF-NORMAL OPERATING CONDITIONS

Component	Design Load or Characteristic	Design Parameter	Applicable Codes/Regs.	NRC Staff Comments On Suitability/ Restrictions
Gas Services				
Nitrogen System	System leak	Flow in 2 hr period > 200 cubic ft.	N/A	
HEPA Filters	Filter leak	Must pass DOP sodium flame or similar test	ANSI/ASME N509-1980	Acceptable

TABLE 5.3.3-3

DESIGN CRITERIA - ACCIDENT CONDITIONS

Component	Design Load or Characteristic	Design Parameter	Applicable Codes/Regs.	NRC Staff Comments On Suitability/ Restrictions
Gas Services				
Components and Piping	Seismic loading	Horiz. accel. in x and y Direction: 0.25g Vertical Accel: 0.17g	NRC Reg. Guides 1.60 and 1.61	Acceptable
	Relief valve failure	Burst disc set at 5 psig	N/A	
HEPA Filters	Design basis tornado	Max delta press. of 3.0 psi with press. drop at 2.0 psig/sec	NRC Reg. Guide 1.76	Acceptable
FHM Depression System	Design basis tornado	Max delta press. of 3.0 psi with press. drop at 2.0 psi/sec	NRC Reg. Guide 1.76	Acceptable

initially at the smallest system flow cross-section, the maximum backfill time was determined to be 5 minutes from the time the valve is opened.

The effect of diurnal temperature transients on the nitrogen system demand and relief operations was determined. The nitrogen system relief and demand valves are set at 3.25 psi and 1.25 psi respectively. The system will operate between -21 degrees C and +10.6 degrees C temperatures without demanding or relieving nitrogen. These temperatures envelope a typical average monthly temperature cycle for the USA. If the limiting operating temperatures of the MVDS, +54 degrees C to -40 degrees C, occurred one time per year, the yearly makeup volume of nitrogen would be 8.3 cubic meters per module.

An analysis was performed to determine the total nitrogen usage rates per year considering IFA loading, ambient temperature cycles, fuel decay heat reduction, atmospheric pressure cycling and seal leakages. The total nitrogen usage per year was determined to be 3503 cubic feet at STP.

The staff concludes that FW calculations to evaluate the performance of the gas services system and to determine the system capacity under normal operating conditions is acceptable.

Off-Normal Operating Conditions

A number of analyses were performed to ensure that the gas services system will be subjected to a suitable depression with respect to the charge hall pressure, to prevent the escape of contamination in the event of system leakage. Most of these analyses were performed for the air system, however, the analysis methods and the results would also be applicable to the nitrogen system.

A completely ruptured pipe at the farthest SST location in a 5 module PWR MVDS was evaluated. The results demonstrated that contamination would not leak from the system downstream from the rupture because the velocity in the ruptured pipe is more than adequate to contain particulate within the system.

An analysis was performed to demonstrate the capability of the depression system flowmeter to detect a leak through a 1/32 inch diameter hole. The results indicate that the flow rate through the hole would be sufficient to be detectable by the depression system flowmeter. A similar analysis was performed to determine the minimum hole size detectable by the nitrogen system flowmeter. The results indicated that the flowmeter can detect a .030 inch minimum diameter hole, similar to the depression system flowmeter described above.

An analysis was performed to evaluate the capacity of the depression system exhauster fan. The analysis assumed a 1/2 inch diameter hole in a module pipe closest to the exhauster. The results indicated that the fan must have the capacity to extract 27 CFM at -15 inches W.G. The selected depression system fan easily meets the requirements.

The staff concludes that FW calculations to demonstrate gas services system performance under off-normal conditions is acceptable.

Accident Conditions

The only analysis performed by FW for gas services system accident conditions was determination of maximum spacing of the anchor points for the gas services system 2 inch supply piping considering seismic loading. The piping segments were analyzed as simply supported beams considering a desired natural frequency of 33 Hz or above. The results indicated that the anchor points must be spaced less than 7 feet-2 inches. The staff considers this analysis acceptable.

5.3.4 Review Procedure of Ventilation and Off-Gas System

5.3.4.1 Design Description

The ventilation and off gas system as described in the FW topical report provides for the following:

1. Ventilation of the TCRB volumes and the sub charge face slab area of the charge hall,

2. Positive pressure gradients from clean areas to areas of potential contamination,

3. Basic heating to maintain minimum occupancy temperatures in working areas and to prevent equipment and filters from becoming iced, and

4. Protection of the environment by filtering through HEPA filters all potentially contaminated air exhausted from the MVDS.

To perform these functions, eight sub-systems are provided, namely;

1. The gas services systems to maintain the cover gas conditions in the SST,

2. The TC off-gas vent system (linked to system (1) above),

3. The self contained FHM depression system (not part of main ventilation systems),

4. The sub-charge face ventilation system for the sub-charge face volume and the charge hall,

5. The ventilation system for the transfer cask preparation area and maintenance area in the TCRB,

6. Ventilation control for the filter room,

7. Ventilation control for the health physics control station, and

8. Clean air supply system.

Sub-systems (1) and (3) above are discussed elsewhere in this SER. The following discussions will address the remaining six subsystems.

5.3.4.2 Acceptance Criteria

The components of the above subsystems are to be designed in compliance with the standards of ANSI/ASME 509-1980. FW has specified that the ventilation systems be sized in accordance with ALARA considerations. They have identified 10 CFR 20 Appendix B as providing guidance on this. The NRC Reg. Guide 3.12 was used to clarify zones for occupation radiation hazard. The NRC staff considers these criteria to be suitable for the ventilation and off gas systems.

5.3.4.3 Review Method and Discussion of Results

Normal Operating Conditions

The design outline for the transfer cask off-gas vent system was evaluated for its ability to provide for release of pressure from the TC before removal of its closure. The site/cask specific fixed pipework and flexible pipe with self sealing coupling for contamination control and for connection with the TC vent valves is designed to accommodate the maximum pressure, temperature, and gas flow to be incurred. The pipework will connect into the gas services system upstream of the filters.

The sub-charge face ventilation sub-system is designed to maintain a specific air velocity of 3.3 feet/minute, through gaps in the charge face slabs, and to discharge the air to the stack via a HEPA filter. The flow rate through the gaps was determined to be sufficient to prevent back-diffusion of particulate from beneath the slabs to the charge hall. The ventilation system analysis addresses the system pressure loss incurred by ten MVDS modules.

The TC Preparation Area ventilation system is designed to maintain a negative pressure differential with respect to the TC Reception Area. Vertical air curtains (minimum air velocity of 100 feet/minute) are employed in areas subject to contamination risk. A horizontal air curtain is employed at the top of the TC. Flow balancing control dampers are provided, and exhaust duct velocities (2000 feet/minute) are established to mitigate particulate deposition.

Filter Room ventilation control is designed to provide 10 air changes per hour, and to maintain 187 CFM whether the sealed access door is open or closed.

Health Physics Control Station ventilation is designed to provide five air changes per hour, and to maintain 130 CFM whether access doors are open or closed. Minimum velocities of 100 feet/minute across door thresholds are provided to preclude contamination particulate back migration.

The clean air supply system is designed to provide filtered and heated (as required) outside air at volume flow rates determined by the total system analysis. The above design criteria and parameters are summarized in Table 5.3.4.3-1

The staff has concluded that FW calculations and analyses of the performance and capacities for the ventilation and off-gas systems under normal operating conditions is acceptable.

Off-Normal Operating Conditions

Analyses of ventilation and off-gas systems postulated event failures were performed to identify and mitigate radiological safety related impacts.

A number of ventilation system failures were postulated, namely: inlet fan failure; exhaust fan failure; breached filters; blocked filters; and closed dampers.

The frequency of fan failure was taken to be approximately two failures per year, and is probably conservatively high. One inlet fan is provided. The NRC staff recommends consideration be given to providing a spare fan, to further inhibit contaminant spreads in this push-pull, once through system design. Redundant exhaust fans are provided, but changeover is a manual operation. The NRC staff recommends that FW consider adding automatic fan changeover to minimize time delay and resultant potential for contamination spread. Also, the staff recommends that the inlet fan be interlocked so that it shuts down, in the event of an exhaust fan failure, to prevent pressurization of the store and potential for contamination spread.

TABLE 5.3.4.3-1

DESIGN CRITERIA FOR VENTILATION AND OFF GAS SYSTEMS

Component	Design Load or Characteristic	Design Parameter	Applicable Codes/Regs.	NRC Staff Comment On Suitability/ Restrictions
All Ventilations Systems	Airborne radio-activity inside facility	See 10 CFR 20	Column 1, Table I of App. B 10 CFR 20	Acceptable
	Airborne radio-activity (personnel access)	See 10 CFR 20	Column 1, Table II of App. B 10 CFR 20	Acceptable
	Radiation levels	Zone classification	Reg. Guide 3.12	Acceptable
Subcharge Face Ventilation System	Air velocity through charge face slabs	3.3 feet/minute	--	Acceptable
	Air inflow per vault module	910 cubic feet/minute	---	Acceptable
Health Physics Station Ventilation System	Air velocity	100 feet/minute	---	Acceptable
	Air inflow (door closed)	5 air changes/hour	---	Acceptable
	Air velocity	130 cubic feet/minute	---	Acceptable
	Air flow (door open)	1755 cubic feet/minute	---	Acceptable
	Air velocity	100 feet/minute	---	Acceptable
Filter Room Ventilation System	Air velocity	100 feet/minute	---	Acceptable
	Air inflow	1812 cubic feet/minute	---	Acceptable

TABLE 5.3.4.3-1 (Continued)

DESIGN CRITERIA FOR VENTILATION AND OFF GAS SYSTEMS

Component	Design Load or Characteristic	Design Parameter	Applicable Codes/Regs.	NRC Staff Comments On Suitability/ Restrictions
Transfer Cask Preparation Area	Air velocity	100 feet/minute	---	Acceptable
	Air velocity (inside duct)	2000 feet/minute	---	Acceptable
Transfer Cask Fanroom	Air velocity			
	(door closed)	1748 feet/minute	---	Acceptable
	(door open)	2786 feet/minute	---	Acceptable
Clean Air Supply System	Supply fan feed air	5 in W.G.	---	Acceptable

Detection of fan failures relies on personnel monitoring of filter differential pressure or control panel running indicator lamps. The NRC staff that recommends these lamps be alarmed.

Spark arresters are provided upstream of each filter to prevent breaching due to fire damage. Sharp objects extrained in the ventilation flow stream would have to penetrate the coarse filters prior to impacting the HEPA filters. Filter differential pressures are routinely monitored, and would reveal filter blockage or closed damper situations.

The transfer cask off-gas vent system failures postulated were: filter failure, line failure, and fan failure.

The HEPA filter and fan utilized by this system are part of the gas services system. Failure of either would result in the transfer cask pressure relieving into the SSTs. No adverse impact on the SSTs is identified.

Failure of the flexible vent line with self-sealing coupling that connects the TC to the gas services system would result in particulate contamination of the TC Preparation Area. This contamination should be confined to the Preparation Area by the ventilation system air curtains that are provided. However, personnel exposure could result. The NRC staff recommends that a continuous air monitor be provided at the TCPA during this operation, and that the flexible vent line be inspected for defects prior to each use.

The staff has concluded that FW analyses of the performance of the ventilation and off-gas systems under off-normal operating conditions is generally acceptable. However, the stated recommendations should be addressed in the site specific applications.

Accident Conditions

The only analyses performed by FW for the ventilation and off-gas systems was for seismic related ducting anchors. The piping runs were modeled as simply supported beams with supports located at intervals to force the natural frequency of the beams to be above 33 Hz. The staff considers the analysis method and results to be appropriate.

REFERENCES

1. [FW Proprietary Information]

2. anon, duPont publication, V.D.S.351, JHB/SEW 13.6.73

3. Brown, R.P. and C.D. Price, RAPRA Long Term Aging Programme - 20 Years Report for Rubbers, Rubber and Plastics Research of Great Britain, Shawburg, England, 1980

4. [FW Proprietary Information]

5. ANSI/ASME N509-1980, Nuclear Power Plant Air Cleaning Units and Components

6.0 SHIELDING EVALUATION

6.1 SUMMARY AND CONCLUSIONS

The MVDS shielding design conforms to the ALARA requirements of 10 CFR 72 and to acceptable shielding methods and practices. The staff concludes, based on the analysis presented in the Topical Report, that the shielding is designed to ensure that dose rates for exposure of operating personnel satisfy the criteria established in the TR subject to the following conditions:

1. The maximum neutron source strength per IFA is 5.17E8 neutrons per second, and

2. The maximum gamma ray source strength is 9.32E15 MeV per second.

It is noted that the radiation levels reported in the TR are not consistent with the Radiation Zoning Criteria. The NRC staff therefore recommends that the assignment of radiation zones to plant areas be modified to be consistent with the results of the radiation shielding analysis.

6.2 DESCRIPTION OF REVIEW

6.2.1 Applicable Parts of 10 CFR 72

The applicable part of 10 CFR 72 regarding the shielding evaluation of the MVDS system is the requirement of 10 CFR 72.3 related to ensuring that occupational exposures to radiation are as low as reasonably achievable, and 10 CFR 72.74 relating to criteria for radiological protection.

6.2.2 Review Procedure

6.2.2.1 Design Description

A radiation zoning system has been adopted for the MVDS shielding design criteria. The allocation of radiation zones is indicated in Table 6.2.2-1.

TABLE 6.2.2-1

RADIATION ZONE CRITERIA

ZONE DESCRIPTION	Unrestricted area - continuous access	Unrestricted area - occupational access	Restricted area - periodic access	Restricted area - controlled access	Radiation area - controlled infrequent access	High radiation area not normally accessible
DESIGNATION	I	II	III	IV	V	VI
MAXIMUM DOSE RATE (mrem/hr)	<0.20	<2.0	<5	<20	<100	=/>100
<u>Plant Area</u>						
TCRB			X			
Filter Room			X			
TCRB Plant Rooms		X				
Charge Hall			X			
FHM Operating Cabin		X				
FHM Access Platform			X			
On FHM (outside operating cabin) with IFA in IFA Cavity				X		
On FHM Access Platform with IFA in transit through Nose Unit				X		
All Other Normally Accessible Areas		X				
Access and Health Physics Control Station	X					

6.2.2.2 Acceptance Criteria

The shielding design is acceptable if shielding evaluation results provide reasonable assurance that the design criteria indicated above are satisfied in the MVDS system design.

6.2.2.3 Review Method

The shielding analysis in the TR was reviewed. Independent confirmatory analyses were performed; however, for the most part an assessment of the appropriateness of the shielding methods was made and checks of the computer input data were performed. The results were also evaluated for self-consistency.

6.2.2.4 Key Assumptions and Computer Codes

The major assumption regarding the shielding analysis concerns the radiation source strength of the IFAs. The design basis assumes a maximum neutron source strength per IFA of 5.17E8 neutrons per second, and a maximum gamma ray source strength of 9.32E15 MeV per second. The shielding analysis of the FHM Operating Cabin assumes a neutron poison in the neutron shield to minimize secondary gamma rays from thermal neutron absorption in the FHM steel casing.

Two computer codes were used in the shielding analysis reported in the TR, namely RANKERN and ANISN. RANKERN is a three dimensional point kernel code developed by the U.K. Atomic Energy Authority. RANKERN uses Combinatorial Geometry routines to describe complex shield geometries and is most similar in methodology to the QAD computer code used in the U.S.A. RANKERN has several improvements over QAD including an albedo scattering option and a stochastic integration method for complex source and shield geometries. ANISN, a one dimensional discrete ordinates code, was used in simple geometries to calculate coupled neutron and gamma ray transport in the MVDS shield design. The ANISN calculations reported in the TR used the CASK 40 group cross section data library and were performed using an S-8 quadrature.

6.3 DISCUSSION OF RESULTS

6.3.1 Source Specifications

The neutron and gamma ray source terms for the MVDS shielding analyses are 5.17E8 neutrons per second and 9.32E15 gamma rays per second respectively. Any combination of irradiation time, burnup, specific power, enrichment and post irradiation time which results in source terms equal to or less than these values will be bounded by the results of the shielding analyses presented in the Topical Report.

6.3.2 IFA Transfer Cask

The TR assumes the use of the NLI 1/2 cask for the transfer of the IFA. Dose rates in the vicinity of the transfer cask were estimated by scaling the cask design dose rates by the ratio of the MVDS design basis source term to the cask design basis source strength. Since this ratio is less than unity, the dose rates in the vicinity of the IFA transfer cask are relatively more acceptable than the license basis for the NLI 1/2 cask.

6.3.3 Fuel Handling Machine

Radiation shielding analyses were performed and reported in the TR for several of the FHM operations which were deemed to be bounding situations.

6.3.3.1 Nose Unit Sleeve Insertion/Withdrawal

Dose rates were evaluated at several locations for the nose unit sleeve insertion/withdrawal operation using the RANKERN computer code along with simple hand calculations. The shield geometry was modeled using the

combinatorial geometry capability of the RANKERN code. The following table summarizes the results of the calculations:

Location	Dose Rate (mrem/hr)
immediately above the nose unit sleeve cavity	16
outer surface of side shielding	20
FHM operating cabin	0.5

6.3.3.2 SST Shield Plug Insertion/Withdrawal

The dose rates during this operation will be necessarily less than during nose unit sleeve insertion/withdrawal since the shielding configuration is identical except that the SST shield plug and grab are present. Thus, dose rates would be correspondingly less than indicated in Section 6.3.3.1.

6.3.3.3 IFA Transfer In/Out of the FHM

Dose rates for the IFA transfer operation into or out of the FHM were calculated using the RANKERN and ANISN codes. The resulting dose rate at the FHM Access Platform is less than 20 mrem/hr.

6.3.3.4 IFA Resident in the Fuel Handling Cavity

Dose rates for the IFA resident in the Fuel Handling Cavity were evaluated at several locations using the RANKERN and ANISN shielding codes. RANKERN was used to estimate direct and scattered components of the neutron and gamma ray dose while ANISN was used to estimate the dose contribution from secondary gamma rays. A significant enhancement in the secondary gamma ray dose was determined to be originating from neutrons penetrating the cast iron shield, subsequently being thermalized in the neutron shield and finally being scattered back into the iron and captured in an (n,gamma)

reaction. The dose rates at several locations are summarized in the following table:

Location	Dose Rate (mrem/hr)
surface of fuel handling cavity shielding	19
inner surface of operating cabin	1
directly above fuel handling cavity	36

6.3.4 Charge Face Structure

Dose rates in and around the charge face structure due to the charge of IFAs in the vault were estimated using the RANKERN code. The shielding effectiveness of the bulk shield was evaluated by calculating the dose rates at several locations as summarized below:

Location	Dose Rate (mrem/hr)
upper surface of CFS	71
under side of CFS	58
immediately above the charge face slabs	3.6
1 ft. above the charge face slab	2.6
streaming contribution at charge face slab	<0.25

6.3.5 Vault Module Concrete Walls

The dose rates in and around the vault module walls resulting from IFAs in the vault were calculated using the RANKERN shielding code. The resulting dose rates are summarized in the following table:

Location	Dose Rate (mrem/hr)
inside vault module	1.7
outside vault module	0.37
outside inlet wall	0.3
outside outlet wall	0.1

6.3.6 Radiation Scatter Through the Cooling Air Inlet and Outlet Ducts

The RANKERN code was used to evaluate radiation scatter through the cooling air inlet and outlet ducts. The albedo scatter option of the code was appropriately used for this purpose. The detailed analysis is reported in the TR and determines that the dose rate on the outer surface of the MVDS building, due to radiation scatter through the inlet duct, is less than the dose rates due to direct penetration at the outer surfaces of the bulk shield walls (see Section 6.3.5 above).

It should be noted that the radiation levels reported in the TR are not consistent with the Radiation Zoning Criteria, and it is therefore recommended that the assignment of radiation zones to plant areas be modified to be consistent with the results of the radiation shielding analysis. The results of the radiation shielding analysis are nonetheless considered to be acceptable, and it is also noted that the predicted radiation levels from the shielding analysis have been used in the estimates of dose to operating personnel.

7.0 CRITICALITY EVALUATION

7.1 SUMMARY AND CONCLUSIONS

Nuclear criticality safety is discussed in Section 3.3.4 in the Topical Report. The largest effective multiplication factor (k-effective) reported in the Topical Report is 0.933 (99% confidence). This value corresponds to a 95% confidence k-effective of 0.931 and was determined for a worst case of optimum interstitial water density and is considered to be a bounding configuration for the MVDS system. Thus it is concluded, based on the analysis presented in the TR, the MVDS system is designed to remain in a subcritical configuration and to prevent a criticality accident. The MVDS system is in compliance with 10 CFR 72.73 as long as the following conditions are met:

1. The fuel assemblies are no more reactive than the Westinghouse 17x17 assembly at 4% enrichment or the General Electric BWR-6 8x8 assembly at 3% enrichment depending on whether the MVDS contains PWR or BWR fuel respectively.

2. No condition exists which can result in flooding of the SST array simultaneously with internal flooding of the SSTs.

7.2 DESCRIPTION OF REVIEW

7.2.1 Applicable Parts of 10 CFR 72

The applicable part of 10 CFR 72 regarding nuclear criticality safety is Part 72.73 which requires that spent fuel handling, transfer and storage systems be designed to be maintained in a subcritical configuration.

7.2.2 Review Procedure

7.2.2.1 Design Description

The MVDS system is designed to provide nuclear criticality safety by designing the SST array spacing such that a subcritical configuration is

maintained for all credible situations. There are no operations in the MVDS facility in which the IFAs are intentionally immersed in water or any other neutron moderating medium. Although there is water service to the health physics control room, there is no water service to the charge hall. Therefore, the criticality safety of the system is based on a facility design and operation which precludes moderating material from achieving a geometrical configuration in combination with the SST array which would violate the nuclear criticality safety criteria.

7.2.2.2 Acceptance Criteria

Section 72.73 of 10 CFR 72 requires that spent fuel handling, transfer and storage systems be designed to be maintained in a subcritical configuration. The design shall include "margins of safety for the nuclear criticality parameters that are commensurate with the uncertainties in the handling, transfer, and storage conditions, in the data and methods used in calculations, and in the nature of the immediate environment under accident conditions." It has been commonly considered in the U.S. that an acceptable margin of safety exists if it can be demonstrated that the effective multiplication factor for the MVDS design is less than 0.950 with a 95% confidence (2 sigma uncertainty) for all credible configurations and environments.

7.2.2.3 Review Method

The criticality analysis presented in Appendix A3-1 of the TR was reviewed in detail. In addition, independent confirmatory calculations were performed, and comparisons were made of the verification calculations of criticality benchmarks referenced in the TR with other calculations reported in the literature.

7.2.2.4 Key Factors/Assumptions

The key factors in the criticality analysis were:

1. The maximum fuel enrichment is 4.0% and 3.0% for the PWR and BWR design basis fuel assemblies respectively.

2. It is not credible that the integrity of the SST seals could fail simultaneously with the interstitial flooding of the array, including the interior of the SSTs, with water of density to optimize the effective multiplication factor of the array (rho = 0.1 gm/ccm).

3. No credit is taken for the presence of burnable poisons remaining in the IFAs, and fuel is assumed to be unirradiated (no burnup credit).

7.3 DISCUSSION OF RESULTS

7.3.1 Analytical Methods

The criticality analysis presented in Appendix A3-1 of the Topical Report was based on the multigroup version of the MONK computer code using the most current version of the WIMS nuclear cross section library. The MONK code and the WIMS library were developed in the U.K. at the Atomic Energy Establishment at Winfrith (AEEW) and are the principal criticality safety code and data used within the U.K. nuclear industry. The MONK code and WIMS data are comparable in capability for nuclear criticality analysis of geometrically complex assemblies to the SCALE system developed in the U.S. The TR referenced extensive comparisons between MONK and KENO which confirm that MONK is capable of accuracies comparable to KENO. KENO has been considered to be the computer code of choice in the U.S. for criticality safety analyses. As a specific validation of the MONK code and WIMS library for the MVDS design, a series of calculations was performed of a set of critical experiments performed at Babcock and Wilcox, and reported in the TR. These experiments are appropriate for validation of the code and cross sections for well moderated systems. From the analysis of the validation experiments it was determined that the error arising from uncertainties within the WIMS data is 0.007 (1 sigma). Although the NRC does not issue blanket acceptance of specific computer codes, the NRC staff has concluded that FW has used the MONK code and WIMS data appropriately and the capability of the code is adequate to determine criticality safety.

As reported in the TR, the calculational procedure used included a detailed geometric description of the fuel assemblies and MVDS structure. From a neutronic standpoint, no significant assumption was made in the geometric modeling of the fuel assemblies. An idealized model of the MVDS VM structure was used.

7.3.2 Design Basis Calculations

The criticality safety assessment reported in the TR is based on calculations performed assuming a range of possible interstitial water densities in the SST array from 0.0 to 1.0 gm/ccm. However, as noted in the key assumptions, the design basis calculations assumed that the environment within the SSTs is maintained by the containment boundary and that flooding within the SSTs is not credible.

The results of the optimum water moderation flooding design basis calculations for the PWR and BWR Vault Module designs are summarized in the following table:

	PWR	BWR
Optimal water density (gm/ccm)	0.14	0.14
k-effective (calculated)	0.904	0.786
Calculation uncertainty (sigma calc)	0.006	0.006
Library uncertainty (sigma library)	0.007	0.007
Modeling uncertainty (sigma geom)	0.01	0.01
Limit k-effective (95% confidence)*	0.931	0.813

Supplementary calculations are presented in the TR to examine the sensitivity of the design basis calculations to changes in calculational parameters such as fuel enrichment, IFA tube pitch, various levels of partial water flooding, composition of vault module concrete, fuel burnup, and fuel temperature. Although these calculations lend credibility and

---

*Calculated as:
k-effective(95% confidence) =
k-effective+2[sigma calcE2+sigma libraryE2]E1/2

confidence to the design basis calculations, as a measure of conservatism conservative sensitivities have been ignored and nonconservative sensitivities have been lumped together into a modeling uncertainty which has been taken into account in the limit k-effective reported above.

On the basis of the analysis presented in the TR, and on the basis of independent calculations and comparisons with similar analyses, it is concluded that the MVDS system is designed to be maintained in a subcritical configuration and to prevent a nuclear criticality accident in compliance with 10 CFR 72.73.

8.0 OPERATING PROCEDURES

8.1 SUMMARY AND CONCLUSIONS

The staff has reviewed the proposed procedures to ensure safe operation of the MVDS as presented in the TR. The procedures cover normal operations (TC receipt and preparation, IFA transfer from the TC to the FHM, IFA transfer from the FHM to the SST, and gas services operations) and operations proposed for mitigation or safe recovery from off-normal and accident conditions.

The operating procedures for the generic MVDS systems and equipment are presented in the TR for approval. These procedures will be expanded in detail and included in a site-specific license application. Review of the generic operating procedures was limited to evaluating the feasibility of accomplishing the various activities.

The staff concludes from its review that the generic operating sequences and steps proposed in the TR for normal, off-normal, and accident conditions are feasible. However, the staff considers a number of accident recovery operations very difficult and suggests particular emphasis on these events in the site-specific license applications. In general, the staff finds that the generic procedures, when augmented with detailed-site specific procedures, will provide for safe operation of the MVDS.

8.2 DESCRIPTION OF REVIEW

8.2.1 Applicable Parts of 10 CFR 72

The regulations used in the review of the TR included appropriate parts of 10 CFR 20 under the heading of "Permissible Doses, Levels, and Concentrations," and those paragraphs of Subparts E and F of 10 CFR 72 related to normal operations, off-normal operations, accident conditions, and radiological doses. While Subpart I of 10 CFR 72 is more applicable to a site-specific application, FW briefly addressed this Subpart.

8.2.2 Review Procedure

8.2.2.1 Description of Operating Procedures

Chapter 5 of the TR presents a generic description of IFA handling, transfer and storage operations under normal conditions for the MVDS. These operations include:

1. Receipt of an IFA from the reactor in a modified version of an existing transfer cask.

2. Transfer of the TC into the transfer cask reception bay using a high integrity crane and transfer trolley.

3. Preparation of the TC for IFA removal and engagement of the TC with the load/unload port.

4. Transfer of the IFA from the TC located in the TCRB, to the fuel handling machine located in the charge hall, via the LUP.

5. Transfer of the IFA to an SST and engagement of the SST by the FHM.

6. Transfer of the IFA into the SST and closure of the SST.

7. Operation of the gas services system to evacuate and purge the SST and maintenance of a nitrogen cover gas in the SST.

Chapter 8 of the TR presents proposed mitigation and recovery operations for postulated off-normal and accident events. Off-normal events include: cask and trolley collision with the LUP; seal leakage on the TC, LUP or SST; electrical power failure; and gas services system malfunctions. Accident events include tornado, earthquake, dropped IFA into the TC or SST, and IFA jamming during transfer operations.

8.2.2.2 Acceptance Criteria

Since the operations presented in the TR are generic, acceptance criteria are limited to the requirements specified in the appropriate sections of 10 CFR 72.

8.2.2.3 Review Method

The NRC staff reviewed the relevant sections of the TR. Chapter 9 of the TR presented a list of operations which included:

1. TC reception and preparation

2. IFA transfer from the TC to the SST

3. Gas services and operations using the Service Point Valve and Service Tool

4. Routine monitoring and inspections of the MVDS operation

5. Fault procedures.

Chapter 9 of the TR referenced Chapters 5 and 8 of the TR which outlined the generic procedures for normal, off-normal, and accident cases. The sequence of operations and the step-by-step procedures proposed in the TR for handling, transfer, and storage of spent fuel were reviewed to determine if any portion might not function as planned. The reviewers used engineering judgment and past experience to evaluate all the proposed steps to reach a determination of feasibility. For those situations where off-normal or accident conditions might occur, a judgment was made to determine if the operations proposed in the TR were reasonable or whether mitigating measures might be available for implementation on a site-specific basis. The NRC staff also prepared comments relevant to training and certification of ISFSI personnel and other more site-specific requirements of Subpart I of 10 CFR 72.

8.2.2.4 Key Assumptions

The procedures to ensure safe operation of the MVDS under normal, off-normal and accident conditions are directed towards ensuring that radiation exposures are maintained as low as reasonably achievable (ALARA). These procedures will be expanded and described fully in site-specific license applications.

8.3 DISCUSSION OF RESULTS

In the review of the MVDS operating procedures for normal, off-normal, and accident conditions, particular attention was given to the following issues:

1. Are the personnel operating distances, residence times and resulting dose rates reasonable and do they comply with specified regulations?

2. Are the alignment dimensional tolerances between the TC, LUP, FHM, and SST achievable based on the equipment and procedures presented?

3. Are the proposed monitoring and inspection features reasonable to ensure safe operation under normal, mitigation, and recovery conditions?

4. Are the required operating times adequate in terms of airborne contamination and maximum fuel temperature limitations?

5. Are the proposed handling, size reduction, decontamination, and fuel material recovery methods for off-normal and accident operations feasible?

Based on a review of the issues identified above, and the level of detail presented in the TR for the generic MVDS system, the staff concludes that the operating procedures, systems and equipment are feasible. However, the staff considers some of the off-normal and accident recovery operations very difficult and suggests that particular emphasis and evaluation be given

to these operations for site specific license applications. These operations are as follows:

1. In the event of an IFA dropped into a SST, the IFA could rupture, resulting in fuel debris in the bottom of the SST. Remote pick up and vacuum of the debris may be difficult with regard to remote maneuvering and observation within the confines of the SST and FHM. In addition, recovery of the fuel material from the vacuum system will be required considering fuel accountability. If the SST is damaged and must be removed, the proposed procedures of lowering the SST into the TCRB area and cutting the SST into segments would be very difficult in terms of handling, cutting method and personnel exposure.

2. Recovery from the TC overturning on the trolley when the TC closure is not secured would also be difficult. The TR indicates that this accident could not happen due to the trolley seismic restraint features. However, the NRC staff identifies this area as requiring additional emphasis for site specific license applications. Personnel exposure and fuel material recovery and accountability would also be important considerations in the event of this accident.

Approval of detailed operating procedures will require review of site-specific license applications.

In addition to the review of the generic step-by-step operating procedures, the NRC staff considered the requirements necessary to assure safe operations. FW has deferred some of these aspects to a site-specific application. Specific features which must be addressed on such an application include:

1. Definition of unique or key organizational groups or functions required to operate and maintain a MVDS.

2. Definition of the personnel qualification requirements for pre-operational test personnel.

3. Definition of the role and adequacy of test personnel in accepting and interpreting startup test results.

4. Definition of the personnel qualifications and methods by which margins of safety will be established and verified for all key structures, components and systems based on pre-operational testing.

5. Definition of the unique and the normal training requirements and programs required for the necessary accident and normal operation of the MVDS.

6. Establishment of operations accident procedures in addition to the establishment of normal operating procedures.

7. Definition of emergency planning/preparedness requirements unique to MVDS including notification requirements for state, local and NRC personnel.

8. Definition of "standard decontamination procedures."

9. Definition of decommissioning program and costs.

9.0 ACCEPTANCE TESTS AND MAINTENANCE PROGRAM

9.1 SUMMARY AND CONCLUSIONS

The staff has reviewed the proposed acceptance testing and maintenance activities for the storage of spent fuel in the MVDS. A detailed pre-operational testing program will be submitted as part of the site specific application; however, the TR does provide a general outline of the pre-operational tests. Maintenance activities for the generic MVDS equipment is provided in the TR. Maintenance of the TC and TC road vehicle is site specific. The staff finds that these generic activities, when augmented with detailed site-specific activities, will provide for safe operation of the MVDS when applied to a site specific application.

9.2 DESCRIPTION OF REVIEW

The review was performed by grouping the test and maintenance activities into the following phases:

1. Procurement, fabrication and shop assembly
2. Site commissioning
3. Operational

The tests and maintenance activities identified in the TR for each phase were evaluated for feasibility and completeness and to determine if they provide for safe operation of those MVDS components which are important to safety. Reference to these testing and maintenance programs has been made throughout the FW TR.

9.3 DISCUSSION OF RESULTS

9.3.1 Acceptance Tests

The outline summary of anticipated pre-operational tests that would be included in a site-specific application is considered to be illustrative only. The general statement of test requirements included at Section 9.2 of the TR is considered appropriate as guidance in future development and

review of the detailed pre-operational testing program to be submitted in a site-specific application.

Testing shall progressively include components, subsystems, and complete systems. Testing shall evaluate compliance in manufacturing, shop and field fabrication and processes, assembly operations and interfaces with other systems. The degree of inspection and testing shall be equal to or in excess of requirements and recommendations of ANSI/ASME NOG-1-1983 (specifically the FHM and the FHM crane, the TC handling crane, and the TC trolley), ANSI/ASME N509-1980, various ASME, ACI, and AISC specifications, the FW quality assurance program, the applicant's site-specific quality assurance program, and various procurement specifications.

The FW table (9.2-1) is considered to adequately outline the principal functional tests to be performed as part of a MVDS acceptance program, with the following exceptions:

1. The table does not provide the information required by Regulatory Guide 3.48, Section 9.2.2 and 9.2.3. The table should only be considered a proposed list of tests.

2. Tests of all mechanical, electrical, and communication services and equipment are not indicated.

The staff recommends that the FW TR section on pre-operational testing (9.2), which defers submittal of a program, be accepted, except that Table 9.2-1 be accepted only as an illustrative partial listing of tests.

Section 11.2 of the TR identifies the following MVDS equipment and systems as important to safety:

1. Transfer Cask and its lid modification
2. Transfer Cask Reception Bay equipment:

    - TC Handling Crane
    - TC Trolley
    - Load/Unload Port
    - Ventilation and Off-Gas System

3. Fuel Handling Machine and Fuel Handling Machine Crane
4. Shielded Storage Tubes and their shield plugs
5. Gas Services System
6. Civil Structure

- Concrete Structure above 5'-9" level and up to plus 30'-0" level
- Charge Face Structure
- Outlet Duct and Canopy above plus 30'-0" level complete
- Foundation Structure (site-specific)
- RA Drain Tank (site-specific)

These equipment items and systems shall be tested to prove compliance with general capabilities, features and parameters presented in the TR and site-specific design and specifications upon which approval of a specific installation is based. A detailed pre-operational testing program will be submitted as part of the site-specific application, however, a general outline of the pre-operational tests are provided in Table 9.2-1 of the TR.

Appendix A4.6 of the TR provides the preliminary design calculations for the gas services system and SST. It also includes information relative to the manufacture and inspection and testing of the system. Items associated with manufacturing include: material certification (chemical and mechanical properties), dimensional inspection, non-destructive test (NDT) of welds and leak testing of pressure vessels. Items identified for testing during shop assembly include: proprietary components, the service tool and service point valve, vacuum testing of the SST, SST plug and vacuum unit. Items identified for site commissioning include: final assembly welds, air system exhauster and nitrogen control panel. At the operational stage, FW identified nitrogen usage and pressure as well as various proprietary items such as HEPA filters.

Appendix A5.4 provides the design calculations for transfer cask receiving bay equipment. It also provides an outline of additional work which will be performed relative to manufacturing, inspecting and testing. Prior to manufacturing, numerous confirmatory calculations based on actual manufacturing drawings will be made. All requirements of NOG-1-1983 Sections 4, 5, and 6 must be completed. All inspection and testing

requirements of section 7 must be met. FW has identified those safety-related items in detail in this Appendix. The NRC has reviewed the items outlined for additional work and finds them to be satisfactory.

Appendix A5.5 of the TR presents the preliminary design analysis for the fuel handling machine and its bridge and trolley. As a part of the design, FW has also included an outline of the additional work that must be accomplished for final design as well as manufacturing and inspection and testing of the FHM and FHMC. Prior to manufacture confirmatory calculations based on actual manufacturing drawings will be made showing conformance with NOG-1-1983 Sections 4, 5, and 6. Following this step, all inspection and test requirements of NOG-1-1983 section 7 must be made. FW has identified aspects of the FHM and FHMC which are not covered by Section 7 of NOG-1-1983. In these cases, FW has specified its own acceptance tests. The NRC has reviewed these pre-operational manufacturing testing and inspection outlines and finds them to be acceptable.

9.3.2 Maintenance Program

Maintenance of the MVDS system in order to ensure continuous operation is not required since the cooling system is totally passive once the spent fuel is in long term storage. However, daily inspection of the MVDS air inlets and outlets will be required to ensure that air flow is not interrupted.

The MVDS will be equipped with systems to allow components which are likely to require maintenance during the MVDS design life to be safely maintained in situ, to be transferred to special maintenance locations in the MVDS, or to be transferred to on-site reactor workshop facilities. Maintenance activities will be carried out in the charge hall (FHM and FHM crane, SST shield plug and gas service system) and the TC preparation area (TC crane, TC trolley and LUP). Used filters from the gas services system and the FHM depression system will be bagged and discharged from the TCRB through the TC handling route. Maintenance of the TC and TC road vehicle is site-specific.

Specific components which were identified by FW in Chapter 4 of the TR as needing routine maintenance and for which procedures were included in the

TR include the FHM and FHMC, replacement of the IFA grabhead, inspection of the IFA grabhead and chain, removal of the IFA grabhead, decontamination of the FHM nose unit sleeve, replacement of the FHM shield plug hoist including grab, replacement of the FHM sleeve hoist and grab, replacement of the FHM lower bearing, replacement of the FHM depression system filter, inspection and replacement of TCRB equipment including filters for the ventilation system, inspection and replacement of the SST shield plug O-ring, replacement of the shield plug integral filter, maintenance of the gas services system, and inspection of the air inlet and outlet clearances.

The NRC reviewers found that the information on maintenance equipment and procedures supplied in the TR represents comprehensive and fairly detailed coverage for the MVDS. Although site-specific details will be necessary for a potential licensee, the material in the TR is acceptable.

Special maintenance equipment is incorporated into the MVDS to permit maintenance operations and special equipment is provided to protect workers from any potential radiological hazards. All maintenance operations which provide a potential for contamination release will be confined within local containment systems to reduce operational radiological risks to ALARA.

In summary, the TR addresses acceptance testing and maintenance as follows:

1. Detailed pre-operational acceptance testing of the MVDS system is site-specific.

2. Acceptance testing of components which are important to safety is subject to industry codes and standards, FW's quality assurance program, the applicant's site-specific quality assurance program and various procurement specifications.

3. Surveillance of the MVDS during the passive storage phase is required, and maintenance must be performed if the MVDS performance is jeopardized.

4. Components which may require maintenance during the MVDS design life will be safely maintained in situ, transferred to maintenance locations in the MVDS or transferred to on-site reactor workshop facilities.

5. Maintenance of the TC and TC road vehicle is site specific.

The staff considers the acceptance testing and maintenance approach acceptable. The generic activities, when augmented with detailed site specific requirements, will provide for safe operation of the MVDS when applied to a site-specific application.

10. RADIOLOGICAL PROTECTION

10.1 ON-SITE

10.1.1 Summary and Conclusions

The shielding, confinement, and handling design features of the MVDS conform to the on-site radiological protection requirements of 10 CFR 20, and are considered acceptable for the set of conditions assumed in this review. The FW design and operational procedures are also consistent with the objective of maintaining occupational exposures as low as reasonably achievable (ALARA). Detailed discussions of access control, surveillance, and other operational aspects affecting on-site exposure are deferred to the site-specific license application.

10.1.2 Description of Review

10.1.2.1 Applicable Parts of 10 CFR 72

Part 72.15 of 10 CFR requires the licensee to provide the means for controlling and limiting occupational radiation exposures within the limits given in 10 CFR Part 20, and for meeting the objective of maintaining exposures as low as reasonably achievable.

Part 72.74(a) of 10 CFR requires that radiation protection systems shall be provided for all areas and operations where on-site personnel may be exposed to radiation or airborne radioactive materials.

Part 20.101(a) of 10 CFR 20 states that any individual in a restricted area shall not receive a total occupational dose in excess of 1.25 rems to the whole body from radioactive material and other sources of radiation in any period of one calendar quarter. Part 20.101(b) states that, under certain conditions, the quarterly dose limit to the whole body is 3 rems in any calendar quarter.

Guidance for ALARA considerations is also provided in NRC Regulatory Guides 8.8 and 8.10.

10.1.2.2 Review Procedure

Design Description

The radiation protection features of the MVDS design include (1) access control; (2) radiation shielding; (3) positioning those operation mechanisms which may require maintenance outside the shielding envelope; and (4) proper ventilation systems for containment of radioactive materials. Access to the site of the MVDS installation, although not specifically addressed in the TR, would be restricted by a periphery fence to comply with 10 CFR 72 restricted area requirements. The details of the access control features are site-specific, and would be described in the applicant's site license application.

The shielding features of the MVDS module are discussed in Appendix 7-1 of the TR. The main shielding features include (1) the Transfer Cask, (2) the Load/Unload Port, (3) the Fuel Handling Machine skirt and bulk shielding, (4) the Vault Module Charge Face Structure, and (5) the massive concrete vault structure surrounding the SST array. This shielding arrangement has been designed to produce exposure rates which are well within acceptable levels, both within and outside of the MVDS.

The containment features of the MVDS control the release of gaseous or particulate radionuclides and are described in Section 7.3.1.1.4 of the TR. These features include:

1. the Depression System, which maintains the internal volume of the FHM at sub-atmospheric pressure, and is equipped with primary particulate and HEPA filters;

2. the Gas Services System, which prevents degradation or gross rupture of the stored fuel by providing a cover gas and temperature control;

3. the SSTs, which together with the Gas Services System, the Shield Plugs and elastomer seals, and the Shield Plug Filter, provide a confinement envelope for the IFAs; and

4. the HEPA filters of the Gas Services System.

The design of the MVDS is such that, under normal conditions of operation, no sources of radioactive material may become airborne in areas easily accessible to, or normally occupied by operating personnel.

Acceptance Criteria

Radiation protection for on-site personnel is considered acceptable if it can be shown that the non-site-specific considerations for maintaining occupational radiation exposures at levels which are as low as reasonably achievable and in compliance with appropriate guidance and/or regulations, and that the dose from associated activities to any individual does not exceed the limits of 10 CFR 20.

Review Method

The calculational methods used in the estimation of on-site doses are described in detail in the TR. Independent or confirmatory calculations of these dose estimates were not made. Rather, the calculational methods and results presented in the TR were reviewed for completeness, correctness, and internal consistency.

Key Assumptions

The on-site dose assessment was estimated from the results of the shielding analysis and expected occupancy rates in the various plant areas. This assessment is based on the assumption of a two-shift operation and an annual handling rate of 76 IFAs per year and 175 IFAs per year for PWR and BWR generic design facilities, respectively, with a post-irradiation time of five years. The design basis PWR IFA has an initial enrichment of 3.2%, and a burn-up of 40 GWd/Te. For the design basis BWR, these values are 2.75% and 33 GWd/Te, respectively. The TR states further that the IFAs which meet the above specification are, in fact, bounded by the gamma and neutron

source terms as defined by Appendix B of ANSI 57.9. These source terms were listed in this SER in Section 2.2 and are not repeated here.

Doses are reported as weighted averages for the individual operations and are based on the maximum expected total hours per year for any individual performing a specific operation, and the total hours per year for all personnel conducting operation within each main plant area. The assessment does not include operations involving preparation and dispatch of the empty TCs from the MVDS, but do include doses resulting from the requirement of changing the O-ring seals of the SST shield plug.

10.1.3 Discussion of Results

10.1.3.1 ALARA Considerations

The design of the MVDS exhibits several features that are specifically directed toward ensuring that occupational doses are in accordance with the ALARA guidance given in Regulatory Guide 8.8, in addition to satisfying the requirements of 10 CFR 20. In addition to the radiation protection design features discussed below, specific considerations include administrative programs such as access control, the application of maximum acceptable dose rates related to access requirements, provisions for shielding based on demonstrably conservative assumptions, location of plant monitoring instrumentation in areas of low dose rate, and use of a ventilation system designed to maintain air pressure gradients to limit the potential spread of contamination. Other considerations are identified in Section 7.1 of the TR.

10.1.3.2 Radiation Protection Design Features of the MVDS

There are several radiation protection design features of the MVDS as described in Sections 7.1.2 and 7.3 of the TR. Descriptions, drawings and material specifications of the radiation protection design features are provided in Chapters 1, 4 and 5 of the TR. Specifically, these design features provide for the following:

1. maintaining the IFAs within a confinement envelope (e.g., the SSTs, FHM, etc.);

2. bulk radiation shielding (e.g., the Civil Structure, FHM, etc.);

3. minimum maintenance requirements with provisions for a "unit replacement philosophy" as far as practical, and positioning of operating mechanisms and drives which may require maintenance outside of the shielding envelope whenever possible;

4. use of shielded service tools so that routine operations may be conducted in a low dose rate area; and

5. labyrinths, "stepped" streaming paths, and shielded pipe trenches to minimize radiation scatter and streaming.

Fixed radiation shielding constitutes the primary method of reducing personnel exposure to radiation. Radiation protection design shielding is based on the results of a shielding design analyses which employed proven and reliable calculational methods, including Point Kernel Integration and Monte Carlo analyses. The main components of the shielding system include:

1. use of a modified transfer cask which allows the FHM to remotely access the TC cavity;

2. FHM bulk shielding surrounding the IFA within the FHM;

3. maintenance of a shielding envelope during operations to transfer, raise or lower IFAs;

4. SST Shield Plugs to maintain shielding integrity of the Charge Face Structure;

5. removable steel Charge Face Slabs above the main Charge Face Structure, which allow the FHM to access individual SSTs while providing a shielded trench; and

6. the massive concrete vault structure surrounding the SSTs, with a baffled cooling air inlet to provide a multiple scatter path from IFAs stored in the SSTs.

10.1.3.3 On-Site Dose Assessment

Radiation exposure was calculated on the basis that all IFAs handled and stored have the peak source strength, and calculated dose rates are in general the maximum values calculated at the shield surface. The collective dose for the TCRB operations were based on the NLI 1/2 cask. A detailed assessment of operator doses and the possible provision of additional local shielding to meet ALARA criteria is deferred to a site-specific license application.

An assessment of the expected on-site collective doses incurred by site personnel for both a PWR and BWR installation are provided in Section 7.4 of the TR. The cumulative dose is calculated by estimating the number of individuals performing each task within each of the main plant areas, i.e., the TCRB, the FHM Operator Cabin, and the FHM Access Platform, and the amount of time associated with the operation. The resulting man-hours are multiplied by the appropriate estimated dose rates for the location of the activity. Table 7.4.1 of the TR provides a summary of the operational procedures which result in radiation exposure to personnel.

The total estimated on-site dose for necessary operations associated with the fuel handling and transfer activities is provided in Table 7.4-2 for a generic PWR installation, and Table 7.4-3 for a BWR installation. The largest contribution to individual and collective dose includes those operations conducted in the TCRB area, specifically, operations involved in transferring the TC to the TC Preparation Area, and the venting and removal of the outer closure clamping ring. The annual collective dose estimated for a PWR installation during fuel loading operations is 4.72 person-rem, while the corresponding value for a BWR installation is 5.8 person-rem. If shield plug O-ring replacement is required, these values would increase by an estimated 0.36 person-rem.

Up to one-half of the collective dose could be received by a single individual. Thus, the maximally exposed worker could receive up to 2.36 rem/year in a PWR installation (2.72 rem with shield plug replacement), or 2.9 rem/year in a BWR installation (3.26 rem with shield plug replacement).

Other workers at the PWR or BWR site will also be exposed to direct and

air-scattered (skyshine) radiation from filled modules. Examples of activities involving such exposure are surveillance of the modules, and site operations which are not associated with stored fuel but which are performed in the general vicinity of the storage area. Major factors influencing the magnitude of the exposures are the occupancy times and spatial distribution of workers, and the intensity of the radiation field. An assessment of such exposures is deferred to site-specific applications.

10.2 Off-Site Radiological Protection

10.2.1 Summary and Conclusions

The shielding and confinement design features of the MVDS conform to the off-site radiological protection requirements of 10 CFR 72 and are considered acceptable for the set of conditions assumed in this review. Design features described in Section 7.3.1 of the TR ensure that during normal operation, there are no effluent streams from the MVDS. Off-site dose is, therefore, due strictly to direct and scattered radiation, the intensity of which is a function of distance. Site-specific factors such as the capacity of the storage array, the distance and direction of the nearest boundary of the controlled zone, the contribution of reactor plant effluents to the off-site dose, and resultant collective off-site dose must be considered in the compliance evaluation for a proposed MVDS at a specific site.

10.2.2 Description of Review

10.2.2.1 Applicable Regulations

Part 72.15(a)(13) of 10 CFR requires, in part, that a safety assessment be performed on the potential dose or dose commitment to an individual located outside the controlled area as a result of radioactivity releases caused by accidents or natural phenomena events.

Part 72.67(a) of 10 CFR requires that during normal operations and anticipated occurrences, the annual dose equivalent to any real individual located beyond the controlled area shall not exceed 25 mrem to the whole body, 75 mrem to the thyroid, and 25 mrem to any other organ as a result of

exposure to (1) planned discharges of radioactive materials (except for radon and its daughter products) to the general environment, (2) direct radiation from MVDS operations, and (3) any other radiation from uranium fuel cycle operations within the region.

Part 72.68(b) requires that any individual located on or near the closest boundary of the controlled area shall not receive a dose greater than 5 rem to the whole body or any organ from any design basis accident.

Appendix I to 10 CFR 50 provides numerical guides for meeting the off-site exposure ALARA criterion. (Note: Although Appendix I relates specifically to design objectives for limiting radioactive material in LWR effluents, the numerical criteria contained therein may be applicable as guidance for evaluating off-site radionuclide concentrations or radiation levels resulting from an MVDS operation.)

10.2.2.2 Review Procedure

The two principal design features which limit off-site exposures during normal operations are the confinement features of the TC, LUP, FHM, SST and Gas Services System, and the radiation shielding of the TC, LUP, FHM, the Charge Face Structure, and the massive concrete walls of the vault structure. The confinement features of the MVDS control the release of gaseous or particulate radionuclides and are described in Section 7.3.1.1.4 of the TR. The radiation shielding design features limit the direct radiation exposure rate and are described and analyzed in Appendix 7.1 of that document. Additionally, Section 7.6 provides a dose-versus-distance curve from the shield analysis results.

Off-normal events and postulated accidents that could result in the loss of shielding or the release of radionuclides are analyzed in Chapter 8 of the TR. These include tornado and earthquake initiated events, IFA drop accidents, and cooling air path blockage.

This evaluation focuses on the off-site doses resulting from normal operations and from a postulated accident which results in an IFA cladding breach. These doses are assessed for compliance with 10 CFR 72. The minimum distance selected for the evaluation of compliance with this section

is 100 meters, which is the minimum distance to the nearest boundary of the controlled area required by 10 CFR 72.68.

10.2.2.3 Acceptance Criteria

Off-site radiological protection features of the MVDS system are deemed acceptable if it can be shown that design and operational considerations which are not site-specific result in off-site dose consequences which are in compliance with the applicable sections of 10 CFR 72, and that these doses to off-site individuals are as low as reasonably achievable.

10.2.2.4 Review Method

The review for off-site radiological protection mainly involved a detailed evaluation of the methods applied and the results obtained in the applicable TR sections, supplemented by additional information provided by FW on these methods and results. For the case of off-site doses from direct and scattered (or "skyshine") radiation, an evaluation was performed on the application of the RANKERN Point Kernal Integration Code, used to generate a dose-versus-distance curve. The dose rates predicted by this curve for an off-site distance of 100 meters was used to assess the general level of compliance with 10 CFR 72.67(a).

The accident analyses provided in Section 8.2 of the TR were evaluated for technical soundness, and the results of the IFA leakage event were verified by independent calculation.

10.2.2.5 Key Assumptions

The assessment of off-site dose from normal operations assumes the following:

1. The recipient of the dose resides at a distance of 100 or 125 meters from the MVDS, which is filled with peak irradiated, minimum decay PWR IFAs.

2. An occupancy factor of unity is assumed, and no credit is taken for attenuation in building materials.

3. The dose rate as a function of distance from a filled MVDS is as illustrated in Figure 7.6-1 of the TR.

The consequence assessment of the dropped IFA/cladding breach event assumes the following:

1. The fraction of the noble gas (assumed to consist entirely of Kr-85) inventory which is released is either 0.1, as recommended by NUREG-0575, or 0.3, as recommended by Regulatory Guide 1.25, "Assumptions Used for Evaluating the Potential Radiological Consequences of a Fuel Handling Accident in the Fuel Handling and Storage Facility for Boiling and Pressurized Water Reactors".

2. The release is short-term (i.e., assumed to last from 0 to 8 hours).

3. Short-term atmospheric dispersion factors were obtained from Regulatory Guide 1.4, "Assumptions Used for Evaluating the Potential Radiological Consequences of a Loss of Coolant Accident for Pressurized Water Reactors".

4. External dose conversion factors were obtained from Regulatory Guide 1.109, "Calculation of Annual Doses to Man from Routine Releases of Reactor Effluents for the Purpose of Evaluating Compliance with 10 CFR Part 50, Appendix I".

5. The distance from the release point to the receptor is 100 or 200 meters.

10.2.3 Discussion of Results

10.2.3.1 Normal Operating Conditions

The dose to an off-site individual residing at a distance of 100 or 125 meters from a filled MVDS is computed as approximately 25 mrem/year or 17 mrem/year, respectively. Since the assessment methodology conservatively assumed peak irradiated fuel, minimum post-irradiation time, full-time occupancy in the direction of maximum off-site dose, and no attenuation by

building materials, it is likely that off-site doses to a "real" individual would be significantly lower. Although site-specific factors (e.g., distance and direction of the nearest off-site residence, fuel conditions, contribution of off-site dose from reactor plant effluents, etc.) must be carefully considered, it is likely that normal operation of an MVDS would comply with the requirements of 10 CFR 72.

10.2.3.2 Accident Conditions

The TR evaluated the dose to an off-site individual at a distance of 100 meters as a result of an IFA drop/cladding breach accident. The TR evaluation is based on the assumption that 10% of the Kr-85 inventory of a PWR IFA would be released, as per NUREG 0575. The resulting doses presented in the TR are 8.5 mrem to the whole body and 980 mrem to the skin.

The following accident dose consequence results have been calculated for an off-site individual at two distances: (1) the minimum controlled area distance required by 10 CFR 72 of 100 meters, and (2) a much more likely minimum distance 200 meters. This assessment uses the method of Regulatory Guide 1.25 (i.e., 30% of Kr-85 inventory released), dispersion factors from Regulatory Guide 1.4, and dose factors from Regulatory Guide 1.109. For comparison, doses for 10% Kr-85 release are also presented. These results are as follows:

Dose Equivalent (rem)

	10% of Kr-85 Released		30 % of Kr-85 Released	
	100 m	200 m	100 m	200 m
Organ:				
Whole Body	0.007	0.002	0.021	0.006
Skin	0.580	0.166	1.740	0.497

These doses are all within the 5 rem limit for whole body or any organ prescribed by 10 CFR 72. It should also be noted that, as indicated in the TR, the probabilities for events that must occur to result in such accidents are very low. Thus, these dose results are only presented to bound the

consequences that could conceivably result, and to evaluate compliance with the 10 CFR 72.68 Standard.

10.3 REVIEW OF PROBABILISTIC APPROACH TO OFF-NORMAL EVENTS

Although the radiological calculations provided for off-normal and accident conditions show doses to the public below regulatory guidelines, FW provided some probabilistic analyses to verify the low frequency of events that would lead to the largest releases to the public or occupational exposures. These calculations are provided to show that reasonable precautions against the worst possible releases have been provided.

The probabilistic accident analysis addresses the likelihood of incidents that could bypass or defeat radiological protection features. For this reason most of the accident analysis addresses mishaps in fuel handling, an area where some of the radiological protection barriers can be more easily bypassed. (For example, during fuel movement, the operator could forget to lower the FHM skirt during a transfer which would result in greater occupational exposure for the operators if the interlocks provided fail to prevent continuation of the transfer.) Although some other accident sequences (primarily meteorological related accidents) and system reliabilities were addressed using probabilistic techniques, most of the analyses were related to fuel transfer activities and the electrical interlocks provided to reduce the likelihood of such accidents. The following is a review of the limited analysis provided by FW.

FW has established frequency guidelines for three classes of accidents. These classes are referred to as Hazard Categories I, II, and III and are defined in Table 10.3-1.

The criteria for these Hazard Categories are:

1. Category I: The event must occur with a frequency less than 1E-6 per year

2. Category II: The event must occur with a frequency less than 1E-4 per year

TABLE 10.3-1

HAZARD CATEGORIES

Hazard Category	I	II	III
Radiation	a. Doses to the general public in excess of approximately 0.5 ERL.	a. Doses to the general public in the range of 0.01 to 0.5 ERL.	a. Doses to the general public in the range of .001 to .01 ERL.
	b. Serious radition hazard to operators, e.g., in exesss of 100 mSv (whole body 10R) in a short time or its equivalent to other internal organs.	b. Radiation doses to operators in excess of the annual limit, e.g., in the range 10-100 mSv (whole body) in a short time: or its equivalent to other internal organs.	b. Inadvertent radiation doses in excess of those expected in normal operation but less than the annual limit.
	c. High dose rates to operators in excess of 50 mSv per hour (5 R/hr).	c. Dose rate to operators in the range 2.5-50 mSv per hour.	c. Enhanced radiation dose rates in the range up to 2.5 mSv/hr (0.25 R/hr).

Notes: 1 rem = 10 mSv
ERL = Environmental Radiation Limit

3. Category III: The event must occur with a frequency less than 1E-2 per year

To meet these criteria several interlock (protective device) criteria were used. These include three electrical interlocks for Hazard Category I, two electrical interlocks for Category II and one interlock for Category III.

While there are no regulatory criteria that directly address the frequency of these types of releases, the guidelines suggested by FW should provide sufficient protection against inadvertent radioactivity releases due to facility operation. Experience gained through the application of probabilistic techniques to nuclear power plants would support a claim that the low frequency and relatively small consequences of accidents in these three Hazard Categories should not significantly contribute to the risk of storage of spent fuel.

The following is a review of the probabilistic analysis presented in Chapter 8 and Appendices A5-4 and A5-5 of the FW TR. Some general comments are presented first, followed by a more detailed discussion of the accidents that result in Hazard Category I releases.

The off-normal and accident scenarios described in Sections 8.1.2 and 8.2 of the TR in some cases included a probabilistic analysis of the sequence of events. In some cases, a partial probabilistic analysis was performed; in others, no probabilistic analysis was performed. The low probability of a sequence of events or the small consequences of these events was used to justify curtailing or not performing the analysis.

Several minor inconsistencies were found in the probabilistic analyses performed for these off-normal events. Two of the most noticeable involve the number of fuel handling operations expected and the error probabilities associated with operator actions. In different event scenarios either three or four fuel handling operations per week were used to establish a number of demands on various portions of the fuel handling machine, the transfer cask trolley and other pieces of equipment. (Three operations per week was described as an expected average workload; four the maximum.) The operator error probabilities used ranged from 0.001 to 0.01 for different accident sequences with 0.003 and 0.01 being the most frequently used. When a value

of 0.01 was used, it was usually treated as a worst case error probability (i.e., "operator error ... is usually better than 1E-2 per demand").

These inconsistencies have little impact on the results of the probabilistic analysis. In general, the lower of the two fuel handling rates, three operations per week, was used in conjunction with the conservative operator error probabilities. The combinations of operator error and fuel handling frequency resulted in a frequency of one to two events per year when the electrical interlocks would be demanded. This factor of two variations in operator error frequency for each task is not a significant difference. One reason this is not significant is that the inherent uncertainty associated with human error probabilities is often an order of magnitude.

In Appendices A.5.5 and A.5.4, FW provides one set of sample calculations to substantiate the reliability of the electrical interlock design. Reliability analyses for interlock 2.4 (the interlock which prevents cask trolley movement away from the LUP while an IFA is being transferred) and interlock 1.90 (the interlock which prevents the rotate drive from being operated unless the fuel assembly hoist is fully raised) were also provided in Appendices A5.4 and A5.5. However, the same analysis was provided for both interlocks.

The analysis performed is, for the most part, correct. The interlocks modeled are three channel interlocks. The appropriate component failures were modeled in each channel. Failure data selected for the component failures is reasonable, and possibly conservative, and the failure probabilities for each channel of the interlock is calculated correctly. However, the application of common cause failure data is inconsistent and misapplied.

The analysis applies a common cause failure probability to two of the three interlock channels. The rationale for not using a three channel common cause factor is that precautions are to be taken to break the common cause linkage between the first and second channels and the third channel. These precautions include ensuring that the components of the third channel are manufactured by a different supplier from the first two channel components. This approach to common cause failure analysis is reasonable.

Generally, common cause failures probabilities are addressed in the following manner:

$$P\text{-}cc = (P\text{-}1)(P\text{-}2|P\text{-}1)$$

where:
- P-cc = common cause failure probability
- P-1 = random failure probability of train 1 of the system
- P-2|P-1 = dependent failure probability of train 2 given failure of train 1

Therefore, the common cause failure probability for a system is dependent on the failure probability of a single train of equipment (single interlock channel) and a common cause failure probability.

FW calculated the random failure probability for all three interlock channels, [(Pfd-1)(Pfd-2)(Pfd-3)] and then adjusted this probability to account for common cause failures. In both appendices, the common cause failure multiplier is listed as 0.1. However, in Appendix A5.4, the results of the analysis show that the random failure probability has been multiplied by a factor of 10, not 0.1, to account for common cause failures. Comments made in the text of the Appendix, "In order to obtain the 1E-6 requirement for class A interlocks, and not be limited by common mode failure at 1E-5" infer that the factor of 10 multiplier is the intended common cause multiplier.

A more appropriate representation of common cause for the three channel interlock would be:

$$P\text{-}cc = (Pfd\text{-}1)(Pfd\text{-}2|Pfd\text{-}1)(Pfd\text{-}3)$$

where:
- Pfd-1 = the random failure probability of one interlock channel
- Pfd-2|Pfd-1 = the common model failure probability of the second interlock channel
- Pfd-3 = the random failure probability of the third interlock channel

Using the data provided in Appendix A5.4, this would yield a triple channel interlock failure probability of 6.9E-6 versus the value of 4.8E-6 calculated by Foster Wheeler. Given the uncertainties associated with common cause analysis, this is not a significant difference.

The remaining event probabilities provided in Chapter 8 of the TR are within reasonable bounds for the type of events modeled in this analysis. In particular, the frequency of tornadoes, although site specific, tend to be in agreement with data for most locations in the United States.

Four events listed in Chapter 8 of the TR were categorized as Hazard Category I events. These events are:

1. Transfer Cask moved from Load/Unload Port without a Plug (8.1.2.7)
2. Skirt Not Lowered Before Fuel Handling (8.1.2.8)
3. SST Not Plugged (8.1.2.10)
4. FHM Motion with IFA Partially Inserted (8.1.2.11)

Triplicated electrical interlocks are provided to prevent each of these four events. In the case of the fourth event, 8.1.2.11, multiple triplicated interlocks are provided to prevent the off-normal event. The Chapter 8 off-normal event analysis uses a value of approximately 1E-6/demand for these interlocks. (As described in Appendix A5 these interlocks have a failure probability of approximately 4.8E-6/demand.) The operator error probability is estimated to be 3E-3 per demand and there are a maximum of 240 demands (fuel transfers) per year. The result is that the first three off-normal events have a frequency approximately 1E-6/year. (If the interlock failure probabilities of Appendix A5 are used, the frequency is slightly larger than 1E-6/year.) The fourth event, due to multiple interlocks, is significantly less likely than the first three.

Although the results of the analyses result in off-normal events that occur with slightly greater frequency than allowed by the Hazard Category criteria, the difference is not significant. The events are calculated to occur at a frequency approximately three times the limit. With the uncertainties associated with human error prediction and common cause analysis, a factor of 3 difference between an event frequency and a design guideline does not warrant a redesign of the system. Based on the above

evaluation, the NRC staff finds the FW analysis methodology and results to be acceptable.

11.0 DECOMMISSIONING

11.1 SUMMARY AND CONCLUSIONS

In summarizing decommissioning considerations for the MVDS, the Topical Report recognizes that the basic design of the MVDS requires decommissioning at the end of its useful life, and that a decommissioning plan would be developed based on site-specific factors. The TR also states that, once the IFAs and other radioactive sources have been removed, the majority of the MVDS could safely be demolished by conventional methods. This position is based mainly on the fact that, through maintenance of a confinement envelope, radioactive contamination will be limited to a few systems or components. These items would be relatively easy to decontaminate, dismantle, and/or package for disposal. This position is based largely on the following assumptions:

1. There is no credible chain of events which would result in widespread contamination outside of the confinement envelope; and

2. Contamination of the external surfaces of the TC and FHM will be maintained below the following surface contamination limits:

Beta-gamma emitters:	10E-4 uCi/sq. cm
Alpha emitters:	10E-5 uCi/sq. cm

The staff finds that the proposed design and procedures are in conformance with the intent of 10 CFR 72.76, but withholds formal approval pending review of a site-specific case.

11.2 DESCRIPTION OF REVIEW

11.2.1 Applicable Parts of 10 CFR 72

Part 72.76 of 10 CFR provides criteria for decommissioning. It requires that considerations for decommissioning be included in the design of an ISFSI, and that provisions be incorporated to (1) decontaminate structures and equipment; (2) minimize the quantity of waste and

contaminated equipment; and (3) facilitate removal of radioactive waste and contaminated materials at the time of decommissioning.

Part 72.18 of 10 CFR defines the need for a decommissioning plan, which includes financing. Such a plan, however, is only appropriate to a site-specific situation, and 10 CFR 72.18 is therefore considered not applicable to this review.

11.2.2 Review Procedure

11.2.2.1 Design Description

The TR acknowledges the need to decommission the MVDS at the end of its life. Provisions shall be made for decontamination, minimization of radioactive waste and contaminated equipment, and the removal of radioactive wastes and contaminated materials.

A decommissioning plan would be drawn up on a site-specific basis. It is anticipated that the IFAs would be removed from the SSTs and placed into the TC, using the FHM in a reverse of the procedure identified for SST loading in Chapter 1.0. The final disposal arrangements of the IFAs are not known.

The TR takes the position that, once the spent fuel and other radioactive materials have been removed for disposal, the majority of the MVDS could be safely demolished by conventional means. This would include the civil structure and the biological shields. This would not include, however, any of the systems or components which come in contact with contaminated surfaces, air, or liquids. The SSTs, the FHM internals, and other equipment items of the fuel route, for example, would probably require decontamination to an acceptable level, followed by packaging and shipment for disposal. Areas or systems such as the TCRB Ventilation System, the Liquid Waste Hold-up Tank, and various maintenance areas and equipment may also warrant decontamination prior to dismantling and demolition.

Contaminated components of the FHM will have weights in excess of 3 ton Charge Hall monorail capacity, requiring the use of temporary enclosure,

ground cover, and steelwork in a procedure which is essentially the reverse of the equipment erection procedure.

In situ decontamination operations such as vacuum cleaning and washing would be performed prior to equipment removal from the confines of the charge hall. Items would be sealed in bags before transport from the temporary enclosure. The final means of packaging and disposal would be influenced by what decontamination level could be reasonably achieved taking account of the operator dose intake.

A detailed decommissioning plan, which would consider such factors as decommissioning options available, likely further use of the site, environmental impact, and available waste transportation and disposal capabilities, would be developed on a site-specific basis.

11.2.2.2 Acceptance Criteria

As Part 72.76 of 10 CFR does not provide specific criteria for acceptance, the licensee is required to design the ISFSI for decommissioning. Therefore, the MVDS design has been reviewed against good nuclear engineering practices which include (1) means to control the spread of contamination, and (2) a design which facilitates decontamination.

11.2.2.3 Review Method

Decommissioning considerations are addressed in a general manner in Section 3.6 of the TR. Other applicable descriptions in the TR includes Section 7.3.1.1.4, which pertains to the radioactive material confinement features of the MVDS, and the specific system descriptions presented in Chapters 1, 4, and 5. These sections were reviewed to assess the adequacy of the proposed design in meeting the acceptance criteria.

11.2.2.4 Key Assumptions

It has been assumed for the purpose of this review that:

1. There is no credible chain of events which would result in widespread contamination outside of the confinement envelope; and

2. Contamination of the external surfaces of the TC and FHM will be maintained below the following surface contamination limits:

Beta-gamma emitters:	10E-4 uCi/sq. cm
Alpha emitters:	10E-5 uCi/sq. cm

11.2.3 Discussion of Results

The MVDS TR claims that the need to decommission the facility at the end of its life by provision of access, ease of decontamination, services, disposal of radioactive arisings, etc., has been recognized. The TR also claims that once the fuel and radioactive sources have been removed, the majority of the MVDS could safely be demolished by conventional means. The exceptions to this would be the contaminated SSTs, internals of the FHM and other parts of the fuel route, ventilation ducting, filters, and decontamination areas and plumbing. The staff concurs with this position, provided that the conduct of operations is such that external surface contamination is maintained below the applicable limits.

The staff concludes that adequate attention has been paid to decommissioning in the design of the MVDS, considering the current state of knowledge.

12.0 OPERATING CONTROLS, LIMITS AND SURVEILLANCE REQUIREMENTS

12.1 SUMMARY AND CONCLUSIONS

Although operating controls and limits are normally reviewed as part of an application for a site-specific license, the staff has reviewed the set of generic operating controls, limits, and surveillance requirements found in Chapter 10 of the TR. These controls and limits are summarized in Tables 12.1-1, 12.1-2, 12.1-3 and 12.1-4 of this SER. The proposed operating controls and limits are found acceptable, with the exception of the following:

1. Specification of a test procedure to verify seal integrity of SST O-ring.

2. Specification of test procedure and requirements to verify toggle clamps for TC trolley are secured.

12.2 DESCRIPTION OF REVIEW

12.2.1 Applicable Parts of 10 CFR 72

10 CFR 72.33 defines the requirements for operating limits and controls. That section only applies to specific licenses, not to reviews and approvals of topical reports. However, to the extent that operating controls and limits in a topical report are referenced in an application for a license, they require approval by the NRC.

12.2.2 Review Procedure

The staff has reviewed Chapters 3, 5, 7, 8, and 10 of the TR with special attention given to those parts which form the basis for a set of generic operating controls and limits. The criteria for and results of the safety analyses provided in the first four above-mentioned chapters were used to review the limiting conditions proposed to Chapter 10.

TABLE 12.1-1

SUMMARY OF FUNCTIONAL AND OPERATING LIMIT SPECIFICATIONS FROM CHAPTER 10 OF FW TR

Topic	Specification	TR Reference
Radiation Zone Criteria	See Table 12.1-2 of SER	Tables 7.3-1, 7.3-2, and 7.3-3
Dose rate at plug in empty transfer cask	Not specified	10.2.1.1
Charge face slab lifting height	1 foot	10.2.1.2
Fuel handling machine alignment at SST or LUP	Plus or minus 3mm	10.2.1.3
Service tool and service point rotation sequence	Initial set to "vacuum"	10.2.1.4
SST vacuum purge pressure	20 mbar (absolute) at end of purge	10.2.1.5
SST vacuum purge pressure rise	SST pressure does not rise more than 10 mbar in 30 min when SST is at initial pressure of 20 mbar (absolute)	10.2.1.6
SST nitrogen backfilling time	Approximately 10 minutes	10.2.1.7

TABLE 12.1-2

RADIATION ZONE CRITERIA

ZONE DESCRIPTION	Unrestricted area - continuous access	Unrestricted area - occupational access	Restricted area - periodic access	Restricted area - controlled access	Radiation area - controlled infrequent access	High radiation area not normally accessible
DESIGNATION	I	II	III	IV	V	VI
MAXIMUM DOSE RATE (mRem/hr)	<0.20	<2.0	<5	<20	<100	=/>100
Plant Area						
TCRB			X			
Filter Room			X			
TCRB Plant Rooms		X				
Charge Hall			X			
FHM Operating Cabin		X				
FHM Access Platform			X			
On FHM (outside operating cabin) with IFA in IFA Cavity				X		
On FHM Access Platform with IFA in transit through Nose Unit				X		
All Other Normally Accessible Areas		X				
Access and Health Physics Control Station	X					

TABLE 12.1-3

SUMMARY OF LIMITING CONDITIONS FOR OPERATION FROM CHAPTER 10 OF FW TR

Topic	Specification	TR Reference
Ventilation systems pre-shift check	Fans running; flow in range, pressure differential in range (1-4 in W.G.)	10.2.2.1
HEPA filter leak detection	DOP, or sodium flame test	10.2.2.1.2
Pre-shift air particulate check	To be determined	10.2.2.2
IFA specifications for storage in nitrogen cover gas		
Fuel to be stored	Max. Initial Enrichment 4.0% PWR 3.0% BWR	Table 3.1-1
	IFA Neutron Source (n/sec) 5.17E8 PWR 2.05E8 BWR	
	IFA Gamma Source (MeV/sec) 9.32E15 PWR 1.85E15 BWR	
Transfer cask handling health physics survey	To be determined	10.2.2.4.1
Transfer cask handling lifting security of TC on crane	Lifting fixtures in "good condition", all fixings to TC lifting features "secure"	10.2.2.4.2
Security of TC on TC trolley	All three toggle clamps tightly engaged	10.2.2.4.3
FHM depression system	1. Fan running 2. Pressure differential in range (1-4 in W.G.) 3. Flow not less than 35 cfm	10.2.2.5.1

TABLE 12.1-3 (Continued)

SUMMARY OF LIMITING CONDITIONS FOR OPERATION FROM CHAPTER 10 OF FW TR

Topic	Specification	TR Reference
FHM seismic restraints	All seismic restraints to be engaged before lowering nose unit or hoists, and to be able to exert rated braking force	10.2.2.5.2
Gas services Purity of nitrogen purge	Concentration of other gases in supply nitrogen 1. Helium: 5% +/- 0.5% 2. Oxygen: less than 5ppm 3. Water: less than 3ppm 4. Other oxidizing agents less than oxygen limit	10.2.2.6.1
Nitrogen supply pressure	Pressure to be determined at site	10.2.2.6.2
TC crane interlocks	Referred to proprietary Table 5.4.1-4 of TR, Spec. not defined	10.2.2.7.1
TC trolley interlocks	Proprietary Table 5.4.1-4, Spec. not defined	10.2.2.7.2
Load/unload port interlocks	Proprietary Table 5.4.1-4, Spec. not defined	10.2.2.7.3
FHM long travel interlocks	Proprietary Table 5.4.1-3, Spec. not defined	10.2.2.7.4
FHM cross travel interlocks	Proprietary Table 5.4.1-3, Spec. not defined	10.2.2.7.5
FHM IFA hoist interlocks	Proprietary Table 5.4.1-3, Spec. not defined	10.2.2.7.6
FHM IFA grab interlocks	Proprietary Table 5.4.1-3, Spec. not defined	10.2.2.7.7
FHM shield skirt interlocks	Proprietary Table 5.4.1-3, Spec. not defined	10.2.2.7.8

TABLE 12.1-3 (Continued)

SUMMARY OF LIMITING CONDITIONS FOR OPERATION FROM CHAPTER 10 OF FW TR

Topic	Specification	TR Reference
FHM plug hoist interlocks	Proprietary Table 5.4.1-3, Spec. not defined	10.2.2.7.9
FHM plug grab interlocks	Proprietary Table 5.4.1-3, Spec. not defined	10.2.2.7.10
FHM sleeve hoist interlocks	Proprietary Table 5.4.1-3, Spec. not defined	10.2.2.7.11
FHM nose unit interlocks	Proprietary Table 5.4.1-3, Spec. not defined	10.2.2.7.12
FHM rotate drive interlocks	Proprietary Table 5.4.1-3, Spec. not defined	10.2.2.7.13

TABLE 12.1-4

SUMMARY OF SURVEILLANCE REQUIREMENTS
FROM CHAPTER 10 OF FW TR

Topic	Specification	TR Reference
Area gamma radiation monitoring	Alarm for following areas: Location — Alarm Level (mRem/hr) FHM operating cabin — 5 FHM access platform — 20 Entrance to charge hall — 5 General charge hall — 5 TC prep. area — 5 FHM depression system HEPA filter — 5 TCRB filter room — 5	10.2.3.1
Portable radiation detection	Not defined	10.2.3.2
Ventilation systems radiation monitor	Instrument set points not defined	10.2.3.3
Nitrogen gas flow rates	Alarm if flow is greater than 200 cu. ft/2 hr	10.2.3.6
Ventilation system status monitoring	Flow rates/pressures not defined. HEPA filter press. differential 1-4 in. W.G.	10.2.3.8
FHM depression system monitoring	Pressure diff. in range not defined. Filter pres. diff. 1-4 in. W.G., flow rate 350 cfm	10.2.3.9
Hold-up tank level	Not defined	10.2.3.10
Surveillance of air inlets	1. Visual inspection of slats and bird screens every seven days 2. Additional visual inspection within 24 hrs. following adverse environment conditions	10.2.3.11

TABLE 12.1-4 (Continued)

SUMMARY OF SURVEILLANCE REQUIREMENTS
FROM CHAPTER 10 OF FW TR

Topic	Specification	TR Reference
Surveillance of air outlets	1. Visual inspection every seven days from ground level 2. Closer examination annually or as indicated by 1. and 3. 3. Visual inspection within 24 hours following accident such as tornado	10.2.3.12
Internal flood drains	Inspect annually to verify drains not blocked	10.2.3.13
Surveillance of SST shield plug seal	Inspect SST shield plug for material degradation	10.2.3.14

12.3 DISCUSSION OF RESULTS

Chapter 10 of the TR presents numerous specifications for functional and operational limits, limiting conditions of operations, and surveillance requirements. These were summarized in the previous tables of this SER. The TR identifies all these controls and limits as being generic to the MVDS and necessary for safe operation.

The requirements which were provided comprise a set of controls and limits for use with the proposed MVDS design. They will have to be augmented by additional specifications or revised to accommodate site-specific issues, but they do serve as a basis for review as a minimum set of requirements.

12.3.1 Fuel Specification

The fuel specification of Table 3.1-1 of the TR restricts the type of fuel acceptable for storage in the proposed MVDS design to ensure that peak fuel rod temperatures, radiation source terms, and neutron multiplication factor are below specified design limits.

12.3.2 Limiting Conditions for Operation

The limiting conditions for operation (LCO) as defined in Tables 12.1-1 and 12.1-3 are acceptable as proposed except for the specification relating to the TC toggle clamp.

Section 10.2.2.4.3 of the TR addresses the requirement to check the security of the three toggle clamps which secure the TC to the TC trolley. Concerns about the 3-piece TC clamping concept, and the associated toggle operating devices were addressed in Section 3.3.4.4 of the SER under "Accident Conditions." One of the concerns with the toggle arrangement is the ability to detect that one of the toggle clamps may not be secure. Item 6 of this section (Surveillance) addresses checking the clamps in accordance with Appendix A5.4. The requirements for toggle clamp surveillance are not apparent in Appendix A5.4, Section A5.4.2.4.4.

12.3.3 Surveillance Requirements

The surveillance requirements as defined in Table 12.1-4 of this SER are acceptable, with the exception of the specification of the test procedure to verify the seal integrity of the SST O-ring. Section 10.2.3.14 of the TR outlines surveillance requirements for the SST shield plug O-rings. As discussed in Chapter 5 of this SER, the NRC staff has evaluated the safe service life of this critical element in the confinement barrier and has concluded that five years represents a conservative estimate for the existing environment of the seal. FW has proposed a five year surveillance cycle for SSTs which are loaded at the beginning of MVDS operations. The NRC staff finds this to be acceptable. FW's basis for surveillance is comprehensive: "Surveillance ensures that no unexpected seal degradation mechanism will cause a loss of SST confinement integrity." However, FW did not specify a test procedure to verify seal integrity. The NRC staff recommends the inclusion of the measurement of compression set as one of several tests which might be proposed.

12.3.4 Design Specifications

There were no limiting design specifications discussed in the TR. However, the NRC staff notes one area which relates to the FHM alignment and offers the following observations.

Section 10.2.1.3 of the TR addresses the capability of the FHM to be positioned at the SST/LUP shield plug within plus or minus 3 mm. Section 5.2.3 of the TR indicates that the FHM bridge and trolley drive motor configurations and speed ratios will allow the operator to "jog" the FHM in 1.5mm increments. This may be difficult considering the size and weight of the FHM/FHMC and the requirement to position the FHM within this accuracy using the x-y motions of the bridge and trolley. Section 5.2.3 of the TR further indicates that during the works assembly/site commissioning operations, the ability to position the FHM within plus or minus 3 mm will be confirmed. If the positioning ability cannot be attained, it could result in a time consuming re-design/re-work. This may be a candidate for early development testing.

13.0 QUALITY ASSURANCE

In a revised Chapter 11, "Quality Assurance," for Revision 1 of the TR, FW has committed to apply the FW quality assurance program to MVDS components identified in Section 3.3 of the TR. Chapter 11 describes the FW quality assurance program to be applied to these components, and it references Revision 3 of the FW Quality Assurance Manual.

The staff has reviewed FW's TR commitments for quality assurance given in the TR and the manual. The staff finds that the FW TR commitments for quality assurance meet the requirements of Subpart G of 10 CFR Part 72 for the MVDS and are, therefore, acceptable.

Changes to the FW Quality Assurance Manual require NRC acceptance prior to implementation. The TR can be referenced without further quality assurance review in a license application to receive and store spent fuel under 10 CFR Part 72, provided that the applicant applies its NRC-approved quality assurance program that meets the requirements of Appendix B to 10 CFR Part 50 to the design, construction, and use of the spent fuel storage facility.

APPENDIX

USE OF AIR AS A COVER GAS

I. AREA OF REVIEW

The subject of this review is the ability of spent fuel cladding under dry storage conditions to maintain its structural integrity throughout the design life of the spent fuel storage installation including the ability to sustain handling loads at the end of design life. This requirement constitutes an interpretation of 10 CFR 72.72(h) whereby the licensee must protect the fuel cladding against degradation and gross rupture. While there are a number of mechanisms that contribute to fuel cladding degradation, this review is limited to an evaluation of the ability of the fuel cladding to meet the regulatory requirements where the cover gas is air.

II. ACCEPTANCE CRITERION

There is, as yet, no formal acceptance criterion for storage of spent fuel in air. The major concern is that oxygen in the air can react with the irradiated uranium dioxide (UO2) fuel in defective fuel rods. This may result in the formation of U308 which could, because of its lower density, generate sufficient strain at the defect site to cause rupture of the cladding. There have been attempts to establish temperature limits for fuel storage in air that would obviate this behavior over the design life of the storage facility. However, it is the opinion of the reviewer that the methodologies proposed to support such limits are as yet inadequate to assure, with a sufficiently large margin of safety, that rupture would not occur before the end of design life. One problem is the uncertainty in extrapolating short term accelerated test data over time periods much greater than those to which the test specimens were subjected. Another is the absence of a model that relates fuel oxidation to subsequent cladding damage. Yet another problem is the paucity of experimental data on the behavior of defective fuel rods in air over long periods of time.

III. REVIEW PROCEDURE

The subject for review is Appendix A4-3 entitled, "The Use of Air as the Cover Gas in the MVDS" which is submitted as part of Foster Wheeler Topical Safety Analysis Report for the MVDS. In addition, the Foster Wheeler response to comments submitted as part of an initial review are also considered. In the absence of an established acceptance criterion, the procedure followed by the reviewer is simply to consider the adequacy of the evidence submitted in the TR to support conformity to the regulatory requirement defined in the area of review.

IV. FINDINGS AND CONCLUSIONS

FW proposes to meet the regulatory requirement against fuel cladding degradation and rupture in air by limiting the initial storage temperature to 150 degrees C. By invoking paragraphs 1.4(b) and (c) of ANSI/ANS-57.9 1984, it is claimed that the 150 degrees C maximum storage temperature will "prevent deleterious metallurgical and chemical reactions" and that the "as received mechanical integrity of the fuel cladding" will be maintained during handling and storage. The reviewer concurs with the statement in paragraph A4.34.0(d) of the TR that the proposed temperature limit is below that which would cause significant cladding degradation from other mechanisms such as oxidation of the zircalloy, stress corrosion cracking, creep damage, etc. However, the case for air as a cover gas outlined in paragraph A4.3.4.0(c) which states that "it is possible to constrain any potential oxidation of exposed UO_2 pellets from defected fuel to those phases that will not cause further degradation of fuel from its as received condition" is not correct nor is it consistent with the criterion finally selected by the applicant. This statement implies that the formation of U_3O_8 in defective fuel rods throughout the design life of the spent fuel storage installation can be avoided. While this may be so "provided that appropriate time/temperature conditions apply," the case has to be made that no U_3O_8 will be formed at the temperatures of the fuel rods anticipated by FW over, at least, a twenty year period.

Of the three degradation criteria selected for consideration in Paragraph A4.3.4.1.2 of the TR, the intercept method to predict the end of the U_3O_7 oxidation phase and the onset of powder production and spallation

does reflect a criterion that limits significant amounts of U3O8 production. On the other hand, the weight gain criterion that corresponds to a limited amount of growth does imply the formation of significant amounts of U3O8. The growth limit that is insufficient to cause splitting of the cladding would constitute a valid acceptance criterion to meet the regulatory requirement for protecting fuel cladding against degradation and gross rupture. Yet this criterion is not included in Paragraph A4.3.4.0 which purports to outline the case for air as a cover gas.

Returning to the considered degradation criteria, we note that the time to power formation varies with burnup level for irradiated fuel. As pointed out in Paragraph A4.3.5.4(c) of the TR, the time to powder production and particulate spallation may be delayed for irradiated fuel. Consequently, the time to powder production is not appropriate for a generic acceptance criterion. Paragraph A4.3.6.0, which deals with proposed criteria for oxidation, states with respect to the intercept method that the end of the linear induction period of the U3O7 phase is not well marked for irradiated data sets. Consequently, the intercept method is also not appropriate as an acceptance criterion.

The remaining criterion, namely, a weight gain criterion of 0.6%, is the one selected by the applicant to meet the regulatory requirements. In addition, the combined data set for Canadian Candu fuel and the Battelle-PNL LWR fuel was used as a basis for determining the time/temperature relationship at which the 0.6% weight gain is achieved.

Justification for the 0.6% weight gain criterion is based solely upon the work of Hastings and Novak which is described in Ref. 13 in the TR. A review of this reference reveals:

1. The volume increase accompanying conversion to U3O8 is assumed to be reflected as a diametral increase if the fragments were contained within the cladding. For complete conversion to U3O8, the diametral increase is about 12%. For a 15% weight gain (0.6%) the diametral increase is about 1.8% which seems to be the genesis for the 2% uniform strain limit.

2. Significant fuel cladding cracking is merely assumed not to occur below 2% (uniform) diametral change.

In contrast with the text of Ref. 13, the TR states as absolute the contention that the 0.6% weight gain criterion "will not cause sheath or clad splitting due to strain imposed on the clad as oxidation proceeds". There is no evidence in the TR to support this contention. Neither does the information in Ref. 13 provide assurance that an adequate margin exists for the 2% strain limit. In describing the appearance of the single defect in Pickering G.S. element 17 after 208 hours at 250 degrees C, the authors observe that the diametral strain is 2% but there is a diametral bulge at the single defect and there is already evidence of cracking. Novak and Hastings recognize the limitation of this criterion since they qualify the 2% limit only for times up to at least 700 hours at 220 degrees C, 500 hours at 230 degrees C and between 120 and 200 hours at 250 degrees C. This hardly provides a basis for extrapolating the behavior of defective fuel element in air for at least twenty years.

The criterion limiting the strain to 2% refers to uniform diametral strain. In response to the initial NRC comments on the TR, FW pointed out, quite correctly, that "rupture strains of irradiated zircalloy in the temperature range applicable to the MVDS are at least 2%". This, of course, is based upon test specimens that are uniformly strained. In the vicinity of the defect, however, the strain may be much larger than 2% due not only to local bulging of the cladding but also because of the concentration of strain at the defect. While the stress level may be "smoothed" to the yield stress as claimed in the Foster Wheeler response, the strain may and, in fact, did in some cases exceed its ultimate limit. Cracks may not propagate catastrophically as a result of exceeding the fracture toughness stress intensity limit (K-IC) of the cladding, but the crack at a defect may increase in size as the exposed fuel continues to oxidize to U3O8, expands and extends the breach by ductile rupture.

On the basis of these findings the reviewer concludes that the 0.6% weight gain criterion has not been sufficiently established to assure, with an adequate margin of safety, that cladding rupture over a twenty year storage period would not occur.

SUMMARY OF NRC STAFF'S SAFETY EVALUATION REPORT CONCLUSIONS FOR THE FW ENERGY APPLICATIONS, INC., "TOPICAL REPORT FOR FOSTER WHEELER MODULAR VAULT DRY STORE (M.V.D.S.) FOR IRRADIATED NUCLEAR FUEL"

INTRODUCTION

This is a summary of the NRC staff's conclusions in our Safety Evaluation Report (SER) which documents the NRC staff's review of the Topical Report (TR) for the Foster Wheeler Modular Vault Dry Store (MVDS) for Irradiated Nuclear Fuel, EA 86/20, Revision 1, 1987. The TR was prepared by FW Energy Applications, Inc., (FW) using the format suggested by NRC Regulatory Guide 3.48.

Scope

The staff's safety review has been based on the proposed system's meeting the applicable requirements of 10 CFR 72, Subpart E, "Siting Evaluation Factors," Subpart F, "General Design Criteria," and Subpart G, "Quality Assurance." The review also includes consideration of the appropriate parts of 10 CFR 20 for radiation protection during onsite handling, movement, and storage of spent fuel.

This review does not address either the requirements for physical protection under Subpart H, "Physical Protection," of 10 CFR 72 or those under applicable parts of 10 CFR 73, "Physical Protection of Plants and Materials." Further requirements for off-site transport of spent fuel under 10 CFR 71 are not addressed here since the review is limited only to onsite transfer of spent fuel at a reactor site.

This review does not address final approval for installation of a MVDS at any specific location. The scope of the TR excludes descriptions, final designs, procedures, and site characteristics which would be specific to a site. The

review addresses those MVDS characteristics which are described by FW as being common to the MVDS regardless of site characteristics, and for which approval is sought.

The SER specifically identifies those portions of the submittal descriptions and designs which are recommended for approval as satisfactory for inclusion by reference in future site-specific applications for license to construct an MVDS Independent Spent Fuel Storage Installation (ISFSI).

The recommendations for approval of MVDS ISFSI design elements are limited to the level to which the FW MVDS is defined. The drawings and descriptions of the MVDS in the TR do not constitute final construction or fabrication drawings and specifications. However, except as otherwise indicated in the recommendations, the level of design and supporting rationale and analyses presented are adequate to permit the development of such designs and specifications following standard codes and practice.

GENERAL DESCRIPTION OF MODULAR VAULT DRY STORE SYSTEM

The FW MVDS system is an ISFSI which provides for the interim storage of irradiated fuel assemblies (IFAs) from light water reactors (LWRs). Each IFA is housed in a vertical shielded storage tube (SST). A matrix of SSTs is housed within a concrete vault module (VM) that provides biological shielding and protection from environmental conditions. Decay heat from the IFAs is removed passively by a thermosyphon effect. IFAs are transported to the MVDS from an onsite reactor pool using a transfer cask. The transfer cask (TC) is received in the transfer cask reception bay (TCRB) where it is unloaded from the transportation vehicle to a transfer cask trolley via an overhead crane. The transfer cask trolley is then positioned underneath a load/unload port (LUP), where a specially designed shielded fuel handling machine (FHM) removes the IFA from the TC and transports and inserts it into an SST.

In addition to these primary components, the MVDS system requires specific pieces of transfer equipment to move the IFAs from the reactor spent fuel pool

to the FHM for subsequent loading into the SSTs. This site-specific equipment consists of the transfer cask and a transportation vehicle.

Although the size of the storage facility depends on the quantity of fuel to be stored, the TR deals with a minimum MVDS unit of two vault modules and the associated SSTs, TCRB, charge hall and FHM. Each of the two vault modules can hold 83 SSTs for PWR fuel or 150 SSTs for BWR fuel. An additional unit of construction consisting of three vault modules and a charge hall extension is also covered in the TR. Thus, the maximum number of vault modules covered by the TR is five.

STRUCTURAL AND MECHANICAL EVALUATION

With respect to the structural and mechanical evaluation of the FW MVDS system, the staff summary and conclusions are presented in terms of: (1) criteria suitability and any restricting conditions as they might apply to an applicant, and also (2) the degree to which the FW MVDS ISFSI design satisfies the criteria and any restricting conditions.

The FW TR does not present construction drawings and specifications. However, the TR includes design analyses which include structural detailing, component and equipment size selection, and discussion of design approach which provide sufficient design definition to permit review and evaluation. The remainder of the structure above the foundations, except where determined otherwise by the evaluation, could be readily detailed following routine engineering practice, based on the details which are included.

There are five basic structural and mechanical systems which are reviewed in this chapter. They are the civil structure, the shielded storage tubes, the fuel handling machine, the transfer cask reception bay equipment and the transfer cask lid modification. Other systems important to safety as defined by the FW TR, i.e., the SST O-ring cover, gas maintenance system, and the ventilation and off-gas system are covered separately.

This review has included an evaluation of all structural and mechanical design criteria, analysis methodologies, material specifications, allowable stress levels and structural analyses. The staff has reviewed the complete

design of the FW MVDS system proposed by FW and confirms that it is in compliance with 10 CFR 72.72 with the exceptions outlined below.

The staff has reviewed all the principal design criteria proposed by FW for general applicability to the MVDS system and has confirmed that these criteria are in compliance with 10 CFR 72.72 with the following exceptions:

1. ACI-216-R-81 for concrete temperatures is not acceptable (Ref. Table 1.2.2-4 of TR). The NRC staff accepts ACI-349-80 as criteria for concrete temperatures.

2. ASME B&PV Code Section VIII Division 1 is not acceptable for design criteria for the IFA drop accident case for the SST because it does not provide for large plastic deformation. ASME Section III Division 1, Service Level D is acceptable to the NRC staff.

3. ANSI/ASME NOG-1, 1983 contains impact criteria to be used in calculating impact loads due to possible off-normal operation of the overload and monorail crane operation.

The staff has reviewed the analysis methodologies used by FW in preparing their preliminary design for the MVDS and found them to be acceptable with limited exceptions detailed in the SER.

The staff has reviewed the material specifications and allowable stress levels used by FW in preparing their preliminary design and confirmed that the data are in compliance with 10 CFR 72.72 with the exceptions detailed in the SER.

THERMAL EVALUATION

The staff reviewed the FW MVDS thermal design and found it to be acceptable based on its conformance to the applicable sections for 10 CFR 72.72. The review centers on the ability of the design to maintain fuel clad temperatures

within acceptable limits during normal, off-normal and accident conditions. The acceptance criteria for concrete temperatures cited by FW (ACI-216R-81 and ASTM 216R- 23) are not acceptable. Acceptable criteria (Nuclear Safety Structures Code, ACI-349-80, Section A.4) have been substituted by the staff. The limiting temperatures calculated by FW meet these substitute criteria. However, FW has determined only a local area maximum concrete temperature and an accident concrete temperature. Therefore the design is acceptable, provided FW demonstrates that the normal operation concrete temperatures do not exceed 150°F. Limiting temperatures and temperature gradients used for structural and confinement integrity evaluations have been reviewed and found to be conservative. Acceptability of thermal loads and service life based on these limiting conditions is addressed in Section 3.0 of the SER.

CONFINEMENT BARRIERS AND SYSTEMS

This chapter evaluates the suitability and integrity of three systems which contribute to the confinement barriers for the MVDS. These systems are identified in Table 3.3-1 of the TR as being important to safety. They include the: SST plug O-ring seal, the cover gas services, and the ventilation and off-gas systems. The review procedure involved evaluation of all relevant portions of the TR including various appendices and comparison of the design with the design criteria.

The FW TR has proposed two cover gas systems for use in the SSTs. These systems differ very little as far as the actual mechanical and gas system components are concerned, but they differ fundamentally as far as the composition of the actual cover gas is concerned. One proposed system incorporates the essentially inert gas nitrogen, whereas the other system uses dry air. The oxygen in the air is potentially reactive with the irradiated uranium dioxide fuel in defective fuel rods. The TR has addressed the problem, and this SER has evaluated it. The conclusion of the NRC staff reviewers is that FW has not made a satisfactory case to justify using dry air as a cover gas. Nitrogen, on the other hand, is inert under the conditions of storage and is therefore considered to be satisfactory for meeting the requirements of 10 CFR 72.72(h).

The staff has reviewed the features of the MVDS system which provide confinement of the protective nitrogen gas storage tube atmosphere. The review was primarily directed at establishing the level of confidence in the predicted lifetime of the elastomeric O-ring seals which separate the nitrogen gas from the environment. The projected leak rate under expected normal and off-normal conditions was also evaluated.

As a result of this review, the staff concludes that, at the present time the available information is not adequate to support a high level of confidence in a 20-year lifetime for the O-ring seals. This conclusion is based on: (1) identified weakness in the technical analysis supporting the 20-year lifetime, (2) contradictory evidence in the referenced data, and (3) the uncertainties associated with variables whose effects are difficult to analyze. Weaknesses in the technical analysis include neglecting the influence of radiation and extrapolation beyond the range of data for quantification of temperature effects. Evidence in the referenced material supports the TR analysis for high temperature unirradiated conditions, but is inconsistent with the analysis predictions for low temperature, irradiated or humid conditions. Some processes, such as synergistic effects of oxidation and radiation exposure, and some variables, such as water vapor present due to off-gassing of the concrete, introduce uncertainties which can not be quantified at this time. Consequently, the staff recommends that a 5-year lifetime of the O-rings seals be selected and that this service life be verified through testing during operation of the MVDS facility.

The staff has also reviewed the nitrogen cover gas system for use in the SSTs and finds the design to be satisfactory for all conditions.

The NRC staff has also evaluated the FW design of the ventilation and off-gas systems. The staff concurs with the design criteria and methodology which were presented in the TR. However, based on operational engineering experience with handling spent fuel assemblies, the NRC staff recommends that FW consider enhancing the following design areas for a site-specific application:

1. Provision of a spare inlet fan for the ventilation system to prevent contaminant spread.

2. Provision of an automatic exhaust fan changeover system to minimize time delay.

3. Provision of an inlet for interlock to shut it down in event of exhaust fan failure.

4. Provision of alarms to indicate fan failures in addition to lamps.

5. Continuous air monitor in transfer cask preparation area during operations.

6. Inspection of flexible vent line for defects prior to each use.

SHIELDING EVALUATION

The MVDS shielding design conforms to the ALARA requirements of 10 CFR 72 and to acceptable shielding methods and practices. The staff concludes, based on the analysis presented in the Topical Report, that the shielding is designed to ensure that dose rates for exposure of operating personnel satisfy the criteria established in the TR subject to the following conditions:

1. The maximum neutron source strength per IFA is 5.17 x 10E8 neutrons per second, and

2. The maximum gamma ray source strength is 9.32 x 10E15 MeV per second.

It is noted that the radiation levels reported in the TR are not consistent with the Radiation Zoning Criteria. The NRC staff therefore recommends that the assignment of radiation zones to plant areas be modified to be consistent with the results of the radiation shielding analysis.

CRITICALITY EVALUATION

Nuclear criticality safety is discussed in Section 3.3.4 in the Topical Report. The largest effective multiplication factor (k-effective) reported in the Topical Report is 0.933 (99% confidence). This value corresponds to a 95% confidence k-effective of 0.931 and was determined for a worst case of optimum interstitial water density and is considered to be a bounding configuration for the MVDS system. Thus it is concluded, based on the analysis presented in the TR, the MVDS system is designed to remain in a subcritical configuration and to prevent a criticality accident. The MVDS system is in compliance with 10 CFR 72.73 as long as the following conditions are met:

1. The fuel assemblies are no more reactive than the Westinghouse 17 x 17 assembly at 4% enrichment or the General Electric BWR-6 8 x 8 assembly at 3% enrichment depending on whether the MVDS contains PWR or BWR fuel respectively.

2. No condition exists which can result in flooding of the SST array simultaneously with internal flooding of the SSTs.

OPERATING PROCEDURES

The staff has reviewed the proposed procedures to ensure safe operation of the MVDS as presented in the TR. The procedures cover normal operations (TC receipt and preparation, IFA transfer from the TC to the FHM, IFA transfer from the FHM to the SST, and gas services operations) and operations proposed for mitigation or safe recovery from off-normal and accident conditions.

The operating procedures for the generic MVDS systems and equipment are presented in the TR for approval. These procedures will be expanded in detail and included in a site-specific license application. Review of the generic operating procedures was limited to evaluating the feasibility of accomplishing the various activities.

The staff concludes from its review that the generic operating sequences and steps proposed in the TR for normal, off-normal, and accident conditions are feasible. However, the staff considers a number of accident recovery operations very difficult and suggests particular emphasis on these events in the site-specific license applications. In general, the staff finds that the generic procedures, when augmented with detailed site-specific procedures, will provide for safe operation of the MVDS.

ACCEPTANCE TESTS AND MAINTENANCE PROGRAM

The staff has reviewed the proposed acceptance testing and maintenance activities for the storage of spent fuel in the MVDS. A detailed preoperational testing program will be submitted as part of the site-specific application; however, the TR does provide a general outline of the preoperational tests. Maintenance activities for the generic MVDS equipment is provided in the TR. Maintenance of the TC and TC road vehicle is site specific. The staff finds that these generic activities, when augmented with detailed site-specific activities, will provide for safe operation of the MVDS when applied to a site-specific application.

RADIOLOGICAL PROTECTION

The shielding, confinement, and handling design features of the MVDS conform to the onsite radiological protection requirements of 10 CFR 20, and are considered acceptable for the set of conditions assumed in this review. The FW design and operational procedures are also consistent with the objective of maintaining occupational exposures as low as is reasonably achievable (ALARA). Detailed discussions of access control, surveillance, and other operational aspects affecting onsite exposure are deferred to the site-specific license application.

The shielding and confinement design features of the MVDS conform to the offsite radiological protection requirements of 10 CFR 72 and are considered acceptable for the set of conditions assumed in this review. Design features described in Section 7.3.1 of the TR ensure that, during normal operation there

are no effluent streams from the MVDS. Offsite dose is, therefore, due strictly to direct and scattered radiation, the intensity of which is a function of distance. Site-specific factors such as the capacity of the storage array, the distance and direction of the nearest boundary of the controlled zone, the contribution of reactor plant effluents to the offsite dose, and resultant collective offsite dose must be considered in the compliance evaluation for a proposed MVDS at a specific site.

DECOMMISSIONING

In summarizing decommissioning considerations for the MVDS, the Topical Report recognizes that the basic design of the MVDS requires decommissioning at the end of its useful life, and that a decommissioning plan would be developed based on site-specific factors. The TR also states that, once the IFAs and other radioactive sources have been removed, the majority of the MVDS could safely be demolished by conventional methods. This position is based mainly on the fact that, through maintenance of a confinement envelope, radioactive contamination will be limited to a few systems or components. These items would be relatively easy to decontaminate, dismantle, and/or package for disposal. This position is based largely on the following assumptions:

1. There is no credible chain of events which would result in widespread contamination outside of the confinement envelope; and

2. Contamination of the external surfaces of the TC and FHM will be maintained below the following surface contamination limits:

Beta-gamma emitters:	10E-4 μCi/sq. cm
Alpha emitters:	10E-5 μCi/sq. cm

The staff finds that the proposed design and procedures are in conformance with the intent of 10 CFR 72.76, but withholds formal approval pending review of a site-specific case.

OPERATING CONTROLS, LIMITS AND SURVEILLANCE REQUIREMENTS

Although operating controls and limits are normally reviewed as part of an application for a site-specific license, the staff has reviewed the set of generic operating controls, limits, and surveillance requirements found in Chapter 10 of the TR. These controls and limits are summarized in Tables 12.1-1, 12.1-2, 12.1-3 and 12.1-4 of this SER. The proposed operating controls and limits are found acceptable, with the exception of the following:

1. Specification of a test procedure to verify seal integrity of SST O-ring.

2. Specification of test procedure and requirements to verify toggle clamps for TC trolley are secured.

QUALITY ASSURANCE

The staff has reviewed FW's TR commitments for quality assurance given in the TR and Revision 3 of the FW Quality Assurance Manual. The staff finds that the FW TR commitments for quality assurance meet the requirements of Subpart G of 10 CFR Part 72 for the MVDS and are, therefore, acceptable.