TREAT AS
SENSITIVE
INFORMATION

ENCLOSURES V &VI

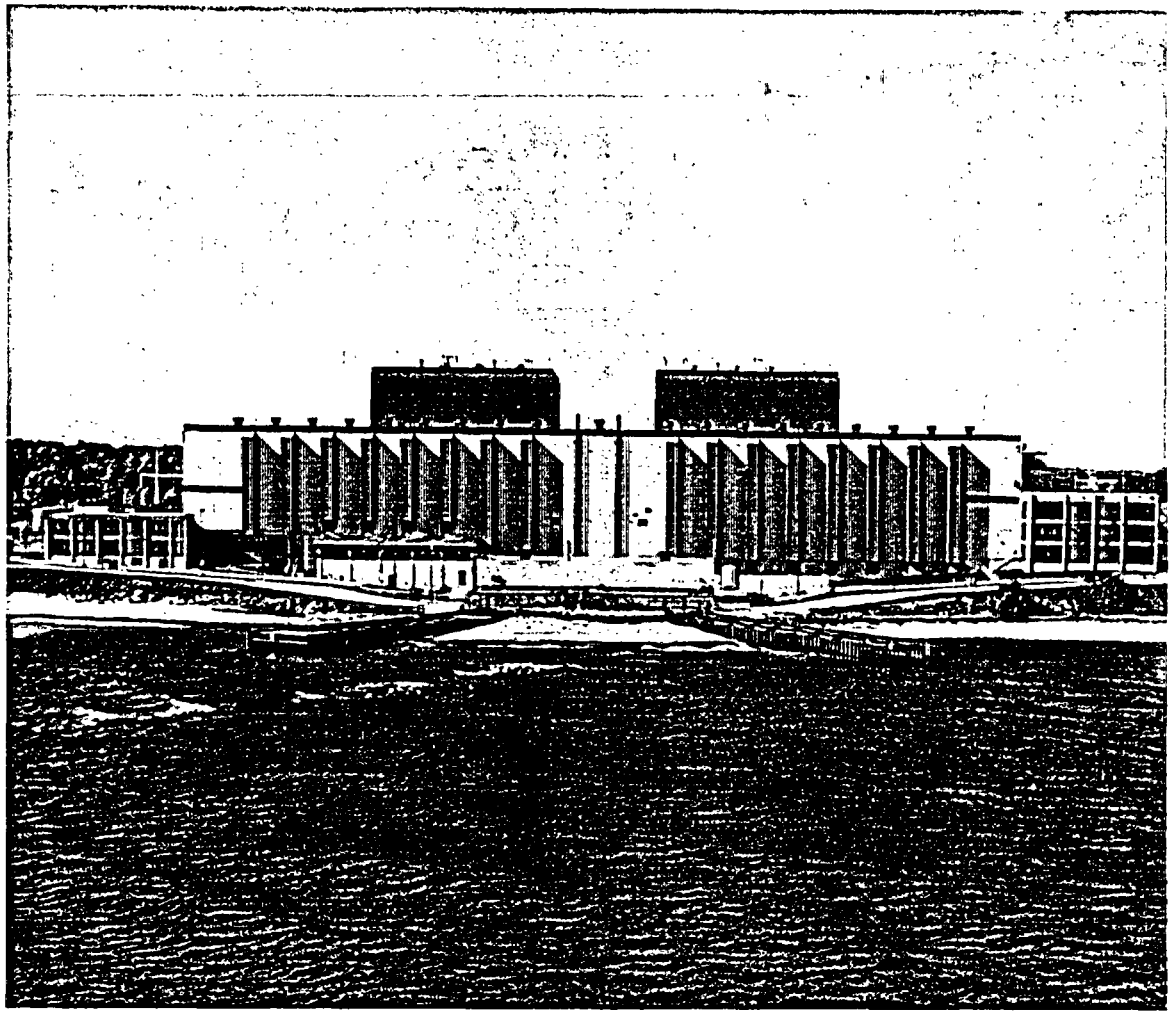

POINT BEACH
REVISED EAL SUBMITTAL

JUSTIFICATION MATRIX
REFERENCE MATERIAL

Enclosure V

Justification Matrix

GENERIC DIFFERENCES

Site Specific Information/Differences/Deviations Justifications

Generic Differences

EAL Numbering Scheme - PBNP utilized a scheme which is different than the NEI 99-01 Rev 4 document. The scheme utilizes different letters as a human performance improvement tool. EALS are described by source S – System Malfunction, H – Hazards and Other, F – Fission Product Barrier, R – Abnormal Radiation (Radiological), C – Cold Shutdown System Malfunctions and E – ISFSI Events. This avoided confusion with the classification designator of U – Unusual Event, A – Alert, S – Site Area Emergency, and G – General Emergency.

99-01 IC	99-01 EAL #	PBNP EAL Number
AU1	1	RU1.1
AU1	2	RU1.2
AU1	3	RU1.3
AU1	4	N/A
AU1	5	N/A
AU2	1	RU2.1
AU2	2	RU2.2
AA1	1	RA1.1
AA1	2	RA1.2
AA1	3	RA1.3
AA1	4	N/A
AA1	5	N/A
AA2	1	RA2.1
AA2	2	RA2.2
AA3	1	RA3.1
AA3	2	RA3.2
AS1	1	RS1.1
AS1	2	RS1.2
AS1	3	N/A
AS1	4	RS1.3
AG1	1	RG1.1
AG1	2	RG1.2
AG1	3	N/A
AG1	4	RG1.3
CU1	1	CU1.1
CU1	2	CU1.2
CU2	1	CU2.1
CU2	2	CU2.2
CU3	1	CU3.1
CU4	1	CU4.1
CU4	2	CU4.2
CU5	1	N/A
CU5	2	N/A
CU6	1	CU6.1
CU6	2	CU6.2
CU7	1	CU7.1
CU8	1	CU8.1
CA1	1	CA1.1
CA1	2	CA1.2
CA2	1	CA2.1
CA2	2	CA2.2
CA3	1	CA3.1
CA4	1	CA4.1
CA4	2	CA4.2

Generic Differences

99-01 IC	99-01 EAL #	PBNP EAL Number
CA4	3	CA4.3
CS1	1	CS1.1
CS1	2	CS1.2
CS2	1	CS2.1
CS2	2	CS2.2
CG1	1	CG1.1
D-AU1	1	N/A
D-AU1	2	N/A
D-AU2	1	N/A
D-SU1	1	N/A
D-SU1	2	N/A
D-HU1	1	N/A
D-HU2	1	N/A
D-HU3	1	N/A
D-HU3	2	N/A
D-HU3	3	N/A
D-HU3	4	N/A
D-HU3	5	N/A
D-HU3	6	N/A
D-HU3	7	N/A
D-HU3	8	N/A
D-AA1	1	N/A
D-AA1	2	N/A
D-AA2	1	N/A
D-AA2	2	N/A
D-HA1	1	N/A
D-HA2	1	N/A
E-HU1	1	EU1.1
E-HU1	2	EU1.2
E-HU1	3	EU1.3
E-HU2	1	EU2.1
FU1		FU1.1
FA1		FA1.1
FS1		FS1.1
FG1		FG1.1
Fuel Cladding P-Loss - 1		Fuel Cladding P-Loss - 1
Fuel Cladding P-Loss - 2		Fuel Cladding P-Loss - 2
Fuel Cladding P-Loss - 3		Fuel Cladding P-Loss - 3
Fuel Cladding P-Loss - 4		Fuel Cladding P-Loss - 4
Fuel Cladding P-Loss – 5		Fuel Cladding P-Loss – 5
Fuel Cladding P-Loss – 6		Fuel Cladding. P-Loss – 6
Fuel Cladding P-Loss - 7		Fuel Cladding P-Loss - 7
Fuel Cladding Loss - 1		Fuel Cladding Loss - 1

99-01 IC	99-01 EAL #	PBNP EAL Number
Fuel Cladding Loss - 2		Fuel Cladding Loss - 2
Fuel Cladding Loss - 3		Fuel Cladding Loss - 3
Fuel Cladding Loss - 4		Fuel Cladding Loss - 4
Fuel Cladding Loss - 5		Fuel Cladding Loss – 5
Fuel Cladding Loss - 6		Fuel Cladding Loss – 6
Fuel Cladding Loss - 7		Fuel Cladding Loss – 7
RCS P-Loss -1		RCS P-Loss -1
RCS P-Loss -2		RCS P-Loss -2
RCS P-Loss -3		RCS P-Loss -3
RCS P-Loss -4		RCS P-Loss -4
RCS P-Loss –5		RCS P-Loss –5
RCS P-Loss -6		RCS P-Loss -6
RCS Loss - 1		RCS Loss - 1
RCS Loss - 2		RCS Loss - 2
RCS Loss - 3		RCS Loss - 3
RCS Loss - 4		RCS Loss - 4
RCS Loss – 5		RCS Loss – 5
RCS Loss - 6		RCS Loss - 6
Containment P-Loss - 1		Containment P-Loss - 1
Containment P-Loss - 2		Containment P-Loss - 2
Containment P-Loss - 3		Containment P-Loss - 3
Containment P-Loss – 4		Containment P-Loss – 4
Containment P-Loss – 5		Containment P-Loss – 5
Containment P-Loss – 6		Containment P-Loss – 6
Containment P-Loss – 7		Containment P-Loss – 7
Containment P-Loss - 8		Containment P-Loss - 8
Containment Loss - 1		Containment Loss - 1
Containment Loss – 2		Containment Loss – 2
Containment Loss – 3		Containment Loss – 3
Containment Loss – 4		Containment Loss – 4
Containment Loss – 5		Containment Loss – 5
Containment Loss – 6		Containment Loss – 6
99-01 IC	99-01 EAL #	PBNP EAL Number
Containment Loss -		Containment Loss - 7

7		
Containment Loss - 8		Containment Loss - 8
HU1	1	HU1.1
HU1	2	HU1.2
HU1	3	HU1.3
HU1	4	HU1.4
HU1	5	HU1.5
HU1	6	HU1.6
HU1	7	HU1.7
HU2	1	HU2.1
HU3	1	HU3.1
HU3	2	HU3.2
HU4	1	HU4.1
HU4	2	HU4.2
HU5	1	HU5.1
HA1	1	HA1.1
HA1	2	HA1.2
HA1	3	HA1.3
HA1	4	HA1.4
HA1	5	HA1.5
HA1	6	HA1.6
HA2	1	HA2.1
HA3	1	HA3.1
HA3	2	HA3.2
HA4	1	HA4.1
HA4	2	HA4.2
HA5	1	HA5.1
HA6	1	HA6.1
HS1	1	HS1.1
HS1	2	HS1.2
HS2	1	HS2.1
HS3	1	HS3.1
HG1	1	HG1.1
HG2	1	HG2.1
SU1	1	SU1.1
SU2	1	SU2.1
SU3	1	SU3.1
SU4	1	SU4.1
SU4	2	SU4.2
SU5	1	SU5.1
SU5	2	SU5.2
SU6	1	SU6.1
SU6	2	SU6.2
SU8	1	SU8.1
SU8	2	N/A
SA2	1	SA2.1
SA4	1	SA4.1
SA5	1	SA5.1
SS1	1	SS1.1
SS2	1	SS2.1
SS3	1	SS3.1
SS4	1	SS4.1
SS6	1	SS6.1
SG1	1	SG1.1
SG2	1	SG2.1

1.

NEI Wording	PBNP Wording
Increase	Rise
Site specific	The word "increase" has been replaced with "rise" consistent with approved communications terminology. The words 'increase' and 'decrease' are not used because they are easily misunderstood. This change is consistent with the site Procedure Writers Guide Rev. 6
Difference	The word "increase" has been replaced with "rise" consistent with approved communications terminology. The words 'increase' and 'decrease' are not used because they are easily misunderstood. This change is consistent with the site Procedure Writers Guide Rev. 6

2.

NEI Wording	PBNP Wording
Decrease	Lower(ing)
Site specific	The word "decrease" has been replaced with "lower(ing)" consistent with approved communications terminology. The words 'increase' and 'decrease' are not used because they are easily misunderstood. This change is consistent with the PBNP Procedure Writers Guide, Rev. 6
Difference	The word "decrease" has been replaced with "lower(ing)" consistent with approved communications terminology. The words 'increase' and 'decrease' are not used because they are easily misunderstood. This change is consistent with the PBNP Procedure Writers Guide, Rev. 6

3.

NEI IC Wording	PBNP IC Wording
Notification of Unusual Event	Unusual Event
Site specific	The NEI classification "Notification of Unusual Event" has been changed to "Unusual Event" for consistency with the commonly understood title given in the current plant EALs.
Difference	The NEI classification "Notification of Unusual Event" has been changed to "Unusual Event" for consistency with the commonly understood title given in the current plant EALs.

4.

NEI IC Wording	PBNP IC Wording
one or more	any
Site specific	By standard English language definition, "one or more" is equivalent to "any." The use of the term "any" decreases EAL user reading burden and, thereby, increases the potential for timely and accurate emergency classifications. Use of "any" has been reviewed in each application and does not alter the meaning or intent of the EAL.
Difference	By standard English language definition, "one or more" is equivalent to "any." The use of the term "any" decreases EAL user reading burden and, thereby, increases the potential for timely and accurate emergency classifications. Use of "any" has been reviewed in each application and does not alter the meaning or intent of the EAL.

5.

NEI IC Wording	PBNP IC Wording
Unplanned	UNPLANNED
Site specific	The word "UNPLANNED" is indicated in capital letters because it has a specific definition associated with its use. This is in accordance with the PBNP Procedure Writers Guide, Rev.6.
Difference	The word "UNPLANNED" is indicated in capital letters because it has a specific definition associated with its use. This is in accordance with the PBNP Procedure Writers Guide, Rev.6.

6.

NEI IC Wording	PBNP IC Wording
Greater Than or >	GREATER THAN
Site specific	The words "GREATER THAN" is indicated in capital letters to be consistent throughout the PBNP EALs. This is in accordance with the PBNP Procedure Writers Guide, Rev.6.
Difference	NEI 99-01 rev. 4 used the words "GREATER THAN" in various formats of upper case text, lower case text, and as a symbol. For PBNP to apply appropriate emphasis and consistency the word GREATER THAN has been used in upper case text throughout. In addition, PBNP Procedure Writers Guide directs that use of the symbol ">" should be avoided in procedure text because these symbols can be easily misunderstood. (Formatting change only)

7.

NEI IC Wording	PBNP IC Wording
Greater Than or Equal to or ≥	GREATER THAN OR EQUAL TO
Site specific	The words "GREATER THAN OR EQUAL TO" is indicated in capital letters to be consistent throughout the PBNP EALs. This is in accordance with the PBNP Procedure Writers Guide, Rev.6.
Difference	NEI 99-01 rev. 4 used the words "GREATER THAN OR EQUAL TO" in various formats of upper case text, lower case text, and as a symbol. For PBNP to apply appropriate emphasis and consistency the words GREATER THAN OR EQUAL TO have been used in upper case text throughout. In addition, PBNP Procedure Writers Guide directs that use of the symbol "≥" should be avoided in procedure text because these symbols can be easily misunderstood. (Formatting change only)

8.

NEI IC Wording	PBNP IC Wording
Less Than or <	LESS THAN
Site specific	The words "LESS THAN" is indicated in capital letters to be consistent throughout the PBNP EALs. This is in accordance with the PBNP Procedure Writers Guide, Rev.6.
Difference	NEI 99-01 rev. 4 used the words "LESS THAN" in various formats of upper case text, lower case text, and as a symbol. For PBNP to apply appropriate emphasis and consistency the words LESS THAN have been used in upper case text throughout. In addition, PBNP Procedure Writers Guide directs that use of the symbol "<" should be avoided in procedure text because these symbols can be easily misunderstood. (Formatting change only)

9.

NEI IC Wording	PBNP IC Wording
"or"	"OR" / "or"
Site specific	Utilized "OR" to ensure clear communication of applicable alternate indication. This is in accordance with the PBNP Procedure Writers Guide Rev. 6. (Formatting change only)
Difference	Utilized "OR" to ensure clear communication of applicable alternate indication. This is in accordance with the PBNP Procedure Writers Guide Rev. 6. (Formatting change only)

10.

NEI IC Wording	PBNP IC Wording
scram	trip
Site specific	The term "scram" was replaced with "trip" consistent with PWR terminology.
Difference	The term "scram" was replaced with "trip" consistent with PWR terminology.

11.

NEI IC Wording	PBNP IC Wording
and	AND / and
Site specific	Utilized "AND" to ensure clear communication of applicable cumulative indication. This is in accordance with the PBNP Procedure Writers Guide Rev. 6. (Formatting change only)
Difference	Utilized "AND" to ensure clear communication of applicable cumulative indication. This is in accordance with the PBNP Procedure Writers Guide Rev. 6. (Formatting change only)

12.

NEI IC Wording	PBNP IC Wording
RPV	Reactor Vessel
Site specific	"Reactor Vessel" was used in place of "RPV" to match site procedure verbiage and PWR terminology
Difference	"Reactor Vessel" was used in place of "RPV" to match site procedure verbiage and PWR terminology

13.

NEI IC Wording	PBNP IC Wording
either	EITHER
Site specific	Utilized "EITHER" to ensure clear communication of applicable cumulative indication. This is in accordance with the PBNP Procedure Writers Guide Rev. 6. (Formatting change only)
Difference	Utilized "EITHER" to ensure clear communication of applicable cumulative indication. This is in accordance with the PBNP Procedure Writers Guide Rev. 6. (Formatting change only)

14.

NEI IC Wording	PBNP IC Wording
not	**NOT**
Site specific	Utilized "**NOT**" to ensure clear communication of applicable cumulative indication. This is in accordance with the PBNP Procedure Writers Guide Rev. 6. (Formatting change only)
Difference	Utilized "**NOT**" to ensure clear communication of applicable cumulative indication. This is in accordance with the PBNP Procedure Writers Guide Rev. 6. (Formatting change only)

15.

NEI IC Wording	PBNP IC Wording
offsite	**offsite**
Site specific	Utilized "**offsite**" to ensure clear communication of applicable cumulative indication. This is in accordance with the PBNP Procedure Writers Guide Rev. 6. (Formatting change only)
Difference	Utilized "**offsite**" to ensure clear communication of applicable cumulative indication. This is in accordance with the PBNP Procedure Writers Guide Rev. 6. (Formatting change only)

16.

NEI IC Wording	PBNP IC Wording
Site-specific list location	Location of site specific information
Site specific	In EALs requiring insertion of site-specific information into the EAL, the information has been added to the end of the EAL structure to improve readability for the Operator.
Difference	In EALs requiring insertion of site-specific information into the EAL, the information has been added to the end of the EAL structure to improve readability for the Operator.

ABNORMAL RAD LEVELS/RADIOLOGICAL EFFLUENT

Site Specific
Information/Differences/Deviations
Justifications

NEI IC#	NEI IC Wording	PBNP IC#(s)	PBNP IC Wording
AU1	Any UNPLANNED Release of Gaseous or Liquid Radioactivity to the Environment that Exceeds Two Times the Radiological Effluent Technical Specifications for 60 Minutes or Longer	RU1	Any UNPLANNED Release of Gaseous or Liquid Radioactivity to the Environment that Exceeds Two Times the Radiological Effluent Technical Specifications for 60 Minutes or Longer
Mode App.	All		All
Site Specific Justification	None		
Difference	• Generic difference # 3 for "Unusual Event" applies. • This change is not a deviation because it does not alter the meaning or intent, such that classification of the event could be different between the NEI guidance and the plant EAL		
Deviation	None		

NEI EAL#	NEI EAL Wording	PBNP EAL#(s)	PBNP EAL Wording
1	VALID reading on any effluent monitor that exceeds two times the alarm setpoint established by a current radioactivity discharge permit for 60 minutes or longer	RU1.1	VALID reading on any effluent monitor that exceeds two times the alarm setpoint established by a current radioactivity discharge permit for 60 minutes or longer.
Mode App.	All		All
Site Specific Justification	*EAL* – None *Basis* – Added wording to clarify discharge permit is source of alarm set point instead of the technical specification. This is in keeping with the intent of the EAL and is included for clarification purposes only. Included a reference to the Alarm Response Set Point Book as supporting detail. This wording does not alter the meaning or intent of the EAL.		
Difference	• Generic difference # 3 for "Unusual Event" applies. • This change is not a deviation because it does not alter the meaning or intent, such that classification of the event could be different between the NEI guidance and the plant EAL		
Deviation	None		

NEI IC#	NEI IC Wording	PBNP IC#(s)	PBNP IC Wording
AU1	Any UNPLANNED Release of Gaseous or Liquid Radioactivity to the Environment that Exceeds Two Times the Radiological Effluent Technical Specifications for 60 Minutes or Longer	RU1	Any UNPLANNED Release of Gaseous or Liquid Radioactivity to the Environment that Exceeds Two Times the Radiological Effluent Technical Specifications for 60 Minutes or Longer
Mode App.	All		All
Site Specific Justification	None		
Difference	• Generic difference # 3 for "Unusual Event" applies. • This change is not a deviation because it does not alter the meaning or intent, such that classification of the event could be different between the NEI guidance and the plant EAL		
Deviation	None		

NEI EAL#	NEI EAL Wording	PBNP EAL#(s)	PBNP EAL Wording
2	VALID reading on one or more of the following radiation monitors that exceeds the reading shown for 60 minutes or longer: (site-specific list)	RU1.2	VALID reading on any of the following radiation monitors that exceeds the reading shown for 60 minutes or longer. Table R-1 Radiation Monitors Monitor / Reading RE-214 Auxiliary Building Vent Exhaust Gas / 2.04E-04 µCi/cc RE-315 Auxiliary Building Exhaust Low Range Gas / 2.04E-04 µCi/cc RE-317 Auxiliary Building Exhaust Mid Range Gas / 2.04E-04 µCi/cc RE-319 Auxiliary Building Exhaust High Range Gas / 2.04E-04 µCi/cc 2RE-307 Containment Purge Exhaust Mid Range Gas / 4.18E-03 µCi/cc* 2RE-309 Containment Purge Exhaust High Range Gas / 4.18E-03 µCi/cc* RE-221 Drumming Area Ventilation Gas / 3.16E-04 µCi/cc RE-325 Drumming Area Exhaust Low Range Gas / 3.16E-04 µCi/cc RE-327 Drumming Area Exhaust Mid Range Gas / 3.16E-04 µCi/cc 1(2)RE-229 Service Water Overboard / 5.56E-05 µCi/cc RE-230 Waste Water Effluent / 2.06E-03 µCi/cc** * with Unit 2 Containment purge or forced vent not occurring ** with Waste Water Effluent discharge not isolated
Mode App.	All		All

Site Specific Justification	*EAL* - • All of the monitors included in Table R-1 provide monitoring on non-routine effluent release pathways for which a discharge permit would not normally be prepared. The reading used for the classification threshold is two times the ODCM default set point for the applicable radiation monitor. ▪ RE-214, -315, -317, and -319 are noble gas monitors used to monitor all gaseous effluent releases occurring through the Primary Auxiliary Building ventilation stack (common for Unit 1 and 2). ▪ 2RE-307 and -309 are noble gas monitors used to monitor all gaseous effluent releases occurring from the Unit 1 and 2 Letdown Gas Strippers which discharge through the Unit 2 Containment Purge ventilation stack. 2RE-307 and 309 were selected because the detectors have a higher operating range than the Letdown Gas Stripper Building discharge monitor (RE-224), which enables them to provide indication for the classification threshold. The reading used for the classification threshold is two times the ODCM default set point for RE-224. This reading assumes that a planned batch release from the Unit 2 Containment building (purge or forced ventilation release) is not occurring. Batch releases from the Unit 2 containment building are controlled using a discharge permit ▪ RE-221, -325, and -327 are noble gas monitors used to monitor all gaseous effluent releases occurring from the Drumming Area ventilation stack (common for Unit 1 and 2). ▪ 1(2) RE-229 is a liquid monitor used to monitor all liquid effluent releases occurring from Unit 1 and 2 which discharge through the Service Water system. ▪ RE-230 is a liquid monitor used to monitor all liquid effluent releases occurring from Unit 1 and 2 which discharge through the Wastewater Effluent system. *Basis* – Included a justification of applicability for each selected monitor in the basis section as stated above. This information does not change the intent or interpretation of the EAL.
Difference	• Generic difference # 3 for "Unusual Event" applies. • This change is not a deviation because it does not alter the meaning or intent, such that classification of the event could be different between the NEI guidance and the plant EAL
Deviation	None

NEI IC#	NEI IC Wording	PBNP IC#(s)	PBNP IC Wording
AU1	Any UNPLANNED Release of Gaseous or Liquid Radioactivity to the Environment that Exceeds Two Times the Radiological Effluent Technical Specifications for 60 Minutes or Longer	RU1	Any UNPLANNED Release of Gaseous or Liquid Radioactivity to the Environment that Exceeds Two Times the Radiological Effluent Technical Specifications for 60 Minutes or Longer
Mode App.	All		All
Site Specific Justification	None		
Difference	• Generic difference # 3 for "Unusual Event" applies. • This change is not a deviation because it does not alter the meaning or intent, such that classification of the event could be different between the NEI guidance and the plant EAL		
Deviation	None		

NEI EAL#	NEI EAL Wording	PBNP EAL#(s)	PBNP EAL Wording
3	Confirmed sample analyses for gaseous or liquid releases indicates concentrations or release rates, with a release duration of 60 minutes or longer, in excess of two times (site-specific technical specifications)	RU1.3	Confirmed sample analysis for gaseous or liquid releases indicates concentrations or release rates, with a release duration of 60 minutes or longer, in excess of two times RETS.
Site Specific Justification	*EAL* - RETS – Radiological Effluent Technical Specifications *Basis* - None		
Difference	▪ The NEI word "analyses" has been replaced with "analysis." This is a grammatical change to allow the subject to agree with the verb "indicates." ▪ Generic difference # 3 for "Unusual Event" applies. ▪ These changes are not a deviation because they do not alter the meaning or intent, such that classification of the event could be different between the NEI guidance and the plant EAL.		
Deviation	None		

NEI IC#	NEI IC Wording	PBNP IC#(s)	PBNP IC Wording
AU1	Any UNPLANNED Release of Gaseous or Liquid Radioactivity to the Environment that Exceeds Two Times the Radiological Effluent Technical Specifications for 60 Minutes or Longer	RU1	Any UNPLANNED Release of Gaseous or Liquid Radioactivity to the Environment that Exceeds Two Times the Radiological Effluent Technical Specifications for 60 Minutes or Longer
Mode App.	All		All
Site Specific Justification	None		
Difference	• Generic difference # 3 for "Unusual Event" applies. • This change is not a deviation because it does not alter the meaning or intent, such that classification of the event could be different between the NEI guidance and the plant EAL		
Deviation	None		

NEI EAL#	NEI EAL Wording	PBNP EAL#(s)	PBNP EAL Wording
4	VALID reading on perimeter radiation monitoring system greater than 0.10 mR/hr above normal background sustained for 60 minutes or longer [for sites having telemetered perimeter monitors]	N/A	N/A
Site Specific Justification	N/A		
Difference	Deleted NEI 99-01 example EAL#4 because plant is not equipped with a perimeter radiation monitoring system.		
Deviation	None		

NEI IC#	NEI IC Wording	PBNP IC#(s)	PBNP IC Wording
AU1	Any UNPLANNED Release of Gaseous or Liquid Radioactivity to the Environment that Exceeds Two Times the Radiological Effluent Technical Specifications for 60 Minutes or Longer	RU1	Any UNPLANNED Release of Gaseous or Liquid Radioactivity to the Environment that Exceeds Two Times the Radiological Effluent Technical Specifications for 60 Minutes or Longer
Mode App.	All		All
Site Specific Justification	None		
Difference	• Generic difference # 3 for "Unusual Event" applies. • This change is not a deviation because it does not alter the meaning or intent, such that classification of the event could be different between the NEI guidance and the plant EAL		
Deviation	None		

NEI EAL#	NEI EAL Wording	PBNP EAL#(s)	PBNP EAL Wording
5	VALID indication on automatic real-time dose assessment capability greater than (site-specific value) for 60 minutes or longer [for sites having such capacity]	N/A	N/A
Site Specific Justification	N/A		
Difference	Deleted NEI 99-01 example EAL#5 because plant is not equipped with an automatic real time dose assessment capability.		
Deviation	None		

NEI IC#	NEI IC Wording	PBNP IC#(s)	PBNP IC Wording
AU2	Unexpected Increase in Plant Radiation	RU2	Unexpected Rise in Plant Radiation
Mode App.	All		All
Site Specific Justification	None		
Difference	• Generic difference # 1 for "rise" and # 3 for "Unusual Event" apply. • These changes are not a deviation because they do not alter the meaning or intent, such that classification of the event could be different between the NEI guidance and the plant EAL		
Deviation	None		

NEI EAL#	NEI EAL Wording	PBNP EAL#(s)	PBNP EAL Wording
1	a. VALID (site-specific) indication of uncontrolled water level decrease in the reactor refueling cavity, spent fuel pool, or fuel transfer canal with all irradiated fuel assemblies remaining covered by water. AND b. Unplanned VALID (site-specific) Direct Area Radiation Monitor reading increases	RU2.1	VALID indication of uncontrolled water level lowering in the reactor refueling cavity, spent fuel pool, or fuel transfer canal with all irradiated fuel assemblies remaining covered by water as indicated by any of the following: o Spent fuel pool low water level alarm setpoint o Visual observation **AND** Any UNPLANNED VALID Area Radiation Monitor reading rises as indicated by: o RE-105 SFP Area Low Range Radiation Monitor o RE-135 SFP Area High Range Radiation Monitor o 1(2) RE-102 El. 66' Containment Low Range Monitor
Site Specific Justification	*EAL -* • The low level alarm is actuated by LC-634, SFP Level Indicator at 62'-8" based on maintaining at least 6' of water on a withdrawn fuel assembly [Ref. 2]. • "Visual observation" has been included to address the site-specific indication listed in the NEI 99-01 Rev. 4. basis (pg. 5-A-5). • RE-105 SFP Area Low Range Radiation Monitor, RE-135 SFP Area High Range Radiation Monitor and 1(2) RE-102 El. 66' Containment Low Range Monitor are the monitors used to classify the event because they are the local SFP and Containment Building area radiation monitor indication available in the control room. • Ref. LCO 3.7.10; The Fuel Storage Pool water level shall be greater than or equal to 23 feet		

	over the top of irradiated fuel assemblies seated in the storage racks during movement of irradiated fuel assemblies in the Fuel Storage Pool. • Ref. LCO 3.9.6; The Refueling Cavity water level shall be maintained greater than or equal to 23 feet above the top of the Reactor Vessel flange during CORE ALTERATIONS, (except during latching and unlatching of Control Rod Drive shafts), AND during movement of irradiated fuel assemblies within Containment. • Ref. RP-1C, ATTACHMENT B, DAILY EQUIPMENT CHECK, the RMS monitors are checked daily. • O-SOP-FH-001 "Fuel /Insat/ Component Movement in the Spent Fuel Pool or New Fuel Vault" has specific requirements for RMS monitoring needed for furl movement. • "Any" was added to the beginning of the phrase to improve overall readability of the EAL. *Basis* – Added alarm actuation indicator and level as justification for selection of this indication in the EAL. This wording does not change the meaning or intent of the EAL.
Difference	• The NEI term "Direct" has been deleted because the monitors used at PBNP to assess this threshold are commonly referred to as Area Radiation Monitors. In addition, the plant EAL specifically names the monitors applicable to this EAL. Three monitors are provided in the EAL although the NEI indicates only one monitor. These monitors are used to classify the event because they are available in the control room to aid in classifying the event occurring in the SFP area. • Generic differences # 3, for "Unusual Event", # 4 for "any", # 2 for "lower(ing)", # 1 for "rise", #5 for "UNPLANNED", and #16 for "site-specific" apply. • These changes are not a deviation because they do not alter the meaning or intent, such that classification of the event could be different between the NEI guidance and the plant EAL.
Deviation	None

NEI IC#	NEI IC Wording	PBNP IC#(s)	PBNP IC Wording
AU2	Unexpected Increase in Plant Radiation	RU2	Unexpected Rise in Plant Radiation
Mode App.	All		All
Site Specific Justification	None		
Difference	• Generic difference # 1 for "rise" and # 3 for "Unusual Event" apply. • These changes are not a deviation because they do not alter the meaning or intent, such that classification of the event could be different between the NEI guidance and the plant EAL		
Deviation	None		

NEI EAL#	NEI EAL Wording	PBNP EAL#(s)	PBNP EAL Wording
2	Unplanned VALID Direct Area Radiation Monitor readings increases by a factor of 1000 over normal* levels. *Normal levels can be considered as the highest reading in the past twenty-four hours excluding the current peak value.	RU2.2	Any UNPLANNED VALID Area Radiation Monitor reading rises by a factor of 1000 over normal* levels. *Normal levels can be considered as the highest reading in the past twenty-four hours excluding the current peak value
Site Specific Justification	*EAL* – None *Basis* – None		
Difference	▪ The NEI term "Direct" has been deleted because the monitors used at PBNP to assess this EAL are commonly referred to as Area Radiation Monitors. ▪ Generic differences # 1 for "rise", # 3 for "Unusual Event", # 4 for "any" and # 5 for "UNPLANNED" apply. ▪ These changes are not a deviation because they do not alter the meaning or intent, such that classification of the event could be different between the NEI guidance and the plant EAL.		
Deviation	None		

NEI IC#	NEI IC Wording	PBNP IC#(s)	PBNP IC Wording
AA1	Any UNPLANNED Release of Gaseous or Liquid Radioactivity to the Environment that Exceeds 200 Times the Radiological Effluent Technical Specifications for 15 Minutes or Longer	RA1	Any UNPLANNED Release of Gaseous or Liquid Radioactivity to the Environment that Exceeds 200 Times the Radiological Effluent Technical Specifications for 15 Minutes or Longer
Mode App.	All		All
Site Specific Justification	None		
Difference	None		
Deviation	None		

NEI EAL#	NEI EAL Wording	PBNP EAL#(s)	PBNP EAL Wording
1	VALID reading on any effluent monitor that exceeds 200 times the alarm setpoint established by a current radioactivity discharge permit for 15 minutes or longer	RA1.1	VALID reading on any effluent monitor that exceeds 200 times the alarm setpoint established by a current radioactivity discharge permit for 15 minutes or longer
Site Specific Justification	*EAL*- None *Basis* - Included a reference to the Alarm Response Set Point Book as supporting detail. This wording does not alter the meaning or intent of the EAL.		
Difference	None		
Deviation	None		

NEI IC#	NEI IC Wording	PBNP IC#(s)	PBNP IC Wording
AA1	Any UNPLANNED Release of Gaseous or Liquid Radioactivity to the Environment that Exceeds 200 Times the Radiological Effluent Technical Specifications for 15 Minutes or Longer	RA1	Any UNPLANNED Release of Gaseous or Liquid Radioactivity to the Environment that Exceeds 200 Times the Radiological Effluent Technical Specifications for 15 Minutes or Longer
Mode App.	All		All
Site Specific Justification	None		
Difference	None		
Deviation	None		

NEI EAL#	NEI EAL Wording	PBNP EAL#(s)	PBNP EAL Wording
2	VALID reading on one or more of the following radiation monitors that exceeds the reading shown for 15 minutes or longer: (site-specific list)	RA1.2	VALID reading on any of the following radiation monitors that exceeds the reading shown for 15 minutes or longer: Table R-2 Radiation Monitors Monitor / Reading RE-317 Auxiliary Building Exhaust Mid Range Gas / 2.04E-02 µCi/cc RE-319 Auxiliary Building Exhaust High Range Gas / 2.04E-02 µCi/cc 2RE-307 Containment Purge Exhaust Mid Range Gas / 4.18E-01 µCi/cc* 2RE-309 Containment Purge Exhaust High Range / 4.18E-01 µCi/cc* RE-327 Drumming Area Exhaust Mid Range Gas / 3.16E-02 µCi/cc * with Unit 2 Containment purge or forced vent not occurring
Site Specific Justification	*EAL -* • All of the monitors included in Table R-2 provide monitoring on non-routine effluent release pathways for which a discharge permit would not normally be prepared. The reading used for the classification threshold is two hundred times the ODCM default set point for the applicable radiation monitor. ▪ RE-317 and -319 are noble gas monitors used to monitor all gaseous effluent releases occurring through the Primary Auxiliary Building (PAB) ventilation stack (common for Unit 1 and 2). RE-317 and -319 were selected because the detectors have a higher operating range than the PAB ventilation stack radiation monitor (RE-214), which enables them to provide indication for the classification threshold ▪ 2RE-307 and -309 are noble gas monitors used to monitor all gaseous effluent releases occurring from the Unit 1 and 2 Letdown Gas Strippers which discharge through the Unit 2 Containment Purge ventilation stack. 2RE-307 and -309 were selected because the detectors have a higher operating range than the Letdown Gas Stripper Building discharge monitor (RE-224), which		

	enables them to provide indication for the classification threshold. The reading used for the classification threshold is two hundred times the ODCM default set point for RE-224. This reading assumes that a planned batch release from the Unit 2 Containment building (purge or forced ventilation release) is not occurring. Batch releases from the Unit 2 containment building are controlled using a discharge permit ▪ RE-327 is a noble gas monitor used to monitor all gaseous effluent releases occurring from the Drumming Area ventilation stack (common for Unit 1 and 2). RE-327 was selected because the detector has a higher operating range than the Drumming Area ventilation stack radiation monitor (RE-221), which enables it to provide indication for the classification threshold. The reading used for the classification threshold is two hundred times the ODCM default set point for RE-221 *Basis* - Included a justification of applicability for each selected monitor in the basis section as stated above. The wording "There are no site-specific liquid radiation monitors capable of monitoring liquid effluent releases at the classification threshold for this EAL because their detector operating range is exceeded prior to reaching these levels. Entry into this EAL for a liquid radioactivity release will be through RA1.1 or RA1.3 (e.g., sampling initiated due to entry into EAL RU1)." was included in the basis as support information for justification of monitor selection only. This does not alter the meaning, intent or interpretation of the EAL.
Difference	None.
Deviation	None

NEI IC#	NEI IC Wording	PBNP IC#(s)	PBNP IC Wording
AA1	Any UNPLANNED Release of Gaseous or Liquid Radioactivity to the Environment that Exceeds 200 Times the Radiological Effluent Technical Specifications for 15 Minutes or Longer	RA1	Any UNPLANNED Release of Gaseous or Liquid Radioactivity to the Environment that Exceeds 200 Times the Radiological Effluent Technical Specifications for 15 Minutes or Longer
Mode App.	All		All
Site Specific Justification	None		
Difference	None		
Deviation	None		

NEI EAL#	NEI EAL Wording	PBNP EAL#(s)	PBNP EAL Wording
3	Confirmed sample analyses for gaseous or liquid releases indicates concentrations or release rates, with a release duration of 15 minutes or longer, in excess of 200 times (site-specific technical specifications)	RA1.3	Confirmed sample analysis for gaseous or liquid releases indicates concentrations or release rates, with a release duration of 15 minutes or longer, in excess of 200 times RETS.
Site Specific Justification	*EAL* - RETS – Radiological Effluent Technical Specifications *Basis* - None		
Difference	▪ The NEI word "analyses" has been replaced with "analysis." This is a grammatical change to allow the subject to agree with the verb "indicates." ▪ This change is not a deviation because it does not alter the meaning or intent, such that classification of the event could be different between the NEI guidance and the plant EAL		
Deviation	None		

NEI IC#	NEI IC Wording	PBNP IC#(s)	PBNP IC Wording
AA1	Any UNPLANNED Release of Gaseous or Liquid Radioactivity to the Environment that Exceeds 200 Times the Radiological Effluent Technical Specifications for 15 Minutes or Longer	RA1	Any UNPLANNED Release of Gaseous or Liquid Radioactivity to the Environment that Exceeds 200 Times the Radiological Effluent Technical Specifications for 15 Minutes or Longer
Mode App.	All		All
Site Specific Justification	None		
Difference	None		
Deviation	None		

NEI EAL#	NEI EAL Wording	PBNP EAL#(s)	PBNP EAL Wording
4	VALID reading on perimeter radiation monitoring system greater than 10.0 mR/hr above normal background sustained for 15 minutes or longer [for sites having telemetered perimeter monitors]	N/A	N/A
Site Specific Justification	N/A		
Difference	Deleted NEI 99-01 Example EAL #4 because the plant is not equipped with a perimeter radiation monitoring system.		
Deviation	None		

NEI IC#	NEI IC Wording	PBNP IC#(s)	PBNP IC Wording
AA1	Any UNPLANNED Release of Gaseous or Liquid Radioactivity to the Environment that Exceeds 200 Times the Radiological Effluent Technical Specifications for 15 Minutes or Longer	RA1	Any UNPLANNED Release of Gaseous or Liquid Radioactivity to the Environment that Exceeds 200 Times the Radiological Effluent Technical Specifications for 15 Minutes or Longer
Mode App.	All		All
Site Specific Justification	None		
Difference	None		
Deviation	None		

NEI EAL#	NEI EAL Wording	PBNP EAL#(s)	PBNP EAL Wording
5	VALID indication on automatic real-time dose assessment capability greater than (site-specific value) for 15 minutes or longer [for sites having such capability]	N/A	N/A
Site Specific Justification	N/A		
Difference	Deleted NEI 99-01 Example EAL #5 because the plant is not equipped with automatic real-time dose assessment capability.		
Deviation	None		

NEI IC#	NEI IC Wording	PBNP IC#(s)	PBNP IC Wording
AA2	Damage to Irradiated Fuel or Loss of Water Level that Has or Will Result in the Uncovering of Irradiated Fuel Outside the Reactor Vessel	RA2	Damage to Irradiated Fuel or Loss of Water Level that Has or Will Result in the Uncovering of Irradiated Fuel Outside the Reactor Vessel
Mode App.	All		All
Site Specific Justification	None		
Difference	None		
Deviation	None		

NEI EAL#	NEI EAL Wording	PBNP EAL#(s)	PBNP EAL Wording
1	A VALID (site-specific) alarm or reading on one or more of the following radiation monitors: (site-specific monitors) Refuel Floor Area Radiation Monitor Fuel Handling Building Ventilation Monitor Refueling Bridge Area Radiation Monitor	RA2.1	A VALID high alarm or reading on any of the following radiation monitors: • RE-105 SFP Area Low Range Radiation Monitor • RE-135 SFP Area High Range Radiation Monitor • RE-221 Drumming Area Ventilation Gas Monitor • RE-321 Drumming Area Exhaust Beta Particulate Monitor • RE-325 Drumming Area Exhaust Low Range Gas Monitor • 1(2) RE-102 El. 66' Containment Low Range Monitor • 1(2) RE-211 Containment Air Particulate Monitor • 1(2) RE-212 Containment Noble Gas Monitor
Site Specific Justification	*EAL* - ▪ VALID 'high" alarms indicated by the radiation monitors listed in RA2.1 may be indicative of a fuel handling accident and are, therefore, appropriate for this EAL [Ref. 1, 2, 3]. High alarm setpoint values and the appropriate detailed responses to radiation monitor high alarms are provided in the PBNP RMS Alarm Set Point and Response Book (RMSASRB) [Ref.1] ▪ Consideration of NRC Information Notice No. 90-08: "Kr-85 Hazards From Decayed Fuel" for establishing EAL RA2.1 radiation monitor thresholds: ▪ NRC IN No. 90-08 provides information to licensees regarding the hazards of Kr-85 from decayed spent fuel. Kr-85 is a noble gas that becomes the predominant gaseous radionuclide in the accident source term for a gap release from spent fuel after 190 days of decay. Kr-85 decays by beta emission (0.67 MeV) in 99.6% of the decays and as a result, direct exposure to this gas would result in a dose to the skin approximately 100 times the whole-body dose. ▪ The noble gas radiation monitor thresholds used for EAL RA2.1 are as follows:		

	▪ RE-221 Drumming Area Ventilation Gas Monitor: 1.58E-04 μCi/cc ▪ RE-325 Drumming Area Exhaust Low Range Gas Monitor: 1.58E-04 μCi/cc ▪ 1 RE-212 Unit 1 Containment Noble Gas Monitor (containment purge): 2.73E-04 μCi/cc ▪ 2 RE-212 Unit 2 Containment Noble Gas Monitor (containment purge): 1.78E-04 μCi/cc ▪ The thresholds were selected from the Offsite Dose Calculation Manual (ODCM) and are the default high alarm setpoints for these monitors. The 1(2) RE-212 high alarm setpoint for containment forced vent does not apply to this EAL because it is not performed during refueling outages and the high alarm setpoints are established for containment purge. ▪ Using the highest alarm setpoint from the list above (1RE-212: 2.73E-04 μCi/cc) and the whole body Dose Conversion Factor (DCF) for Kr-85 from Table 5-1 of the EPA Manual of Protective Action Guides and Protective Actions For Nuclear Incidents (USEPA 400-R-92-001), the whole body dose rate from direct exposure to Kr-85 gas is calculated as follows: ▪ (2.73E-04 μCi/cc) x (1.3E+00 rem/hr per μCi/cc) = 3.55E-04 rem/hr ▪ Using the factor of 100 from NRC IN No. 90-08, the corresponding skin dose rate from direct exposure to Kr-85 gas is 3.55E-02 rem/hr or approximately 36 mrem/hr. ▪ Based on a skin dose rate of 36 mrem/hr, it is concluded that the radiation monitor thresholds for EAL2.1 provide adequate protection for onsite personnel. Entry into this EAL would result in the declaration of an ALERT, activation of the Emergency Response Organization, and initiation of surveys and monitoring to ensure protection of emergency workers onsite. ▪ The listed radiation monitors represent the site-specific equivalents of Refuel Floor Area Radiation Monitor, Fuel Handling Building Ventilation Monitor and Refueling Bridge Area Radiation Monitor. *Basis* – The wording "VALID high alarms indicated by the radiation monitors listed in RA2.1 may be indicative of a fuel handling accident and are, therefore, appropriate for this EAL [Ref. 1, 2, 3]. High alarm setpoint values and the appropriate detailed responses to radiation monitor high alarms are provided in the PBNP RMS Alarm Set Point and Response Book (RMSASRB) [Ref.1]" was added to the basis as justification for the site specific setpoint and does not alter the meaning or intent of the EAL.
Difference	▪ Generic difference # 4 for "any" applies. ▪ This change is not a deviation because it does not alter the meaning or intent, such that classification of the event could be different between the NEI guidance and the plant EAL.
Deviation	None

NEI IC#	NEI IC Wording	PBNP IC#(s)	PBNP IC Wording
AA2	Damage to Irradiated Fuel or Loss of Water Level that Has or Will Result in the Uncovering of Irradiated Fuel Outside the Reactor Vessel	RA2	Damage to Irradiated Fuel or Loss of Water Level that Has or Will Result in the Uncovering of Irradiated Fuel Outside the Reactor Vessel
Mode App.	All		All
Site Specific Justification	None		
Difference	None		
Deviation	None		

NEI EAL#	NEI EAL Wording	PBNP EAL#(s)	PBNP EAL Wording
2	Water level less than (site-specific) feet for the reactor refueling cavity, spent fuel pool and fuel transfer canal that will result in irradiated fuel uncovering	RA2.2	Water level LESS THAN 10 ft above an irradiated fuel assembly for the reactor refueling cavity, the spent fuel pool and transfer canal that will result in irradiated fuel uncovering
Site Specific Justification	*EAL* - 10 ft - Water level lowering to less than 10 feet above an irradiated fuel assembly is indicative of conditions that will result in irradiated fuel uncovering while maintaining adequate radiation shielding to protect personnel in the area. The fuel transfer canal is normally in direct communication with the spent fuel pool so that a drop in level in the fuel transfer canal likewise occurs in the spent fuel pool. There is no remote indication of spent fuel pool or fuel transfer canal water level below the spent fuel pool low water level alarm setpoint (which is significantly higher than the top of fuel seated in the spent fuel pool). Report of visual observation of irradiated fuel uncovery in these volumes is, therefore, the only direct method of ascertaining the loss of inventory with respect to fuel uncovery. This implements the basis wording of the NEI EAL. *Basis* – Included above wording in the basis discussion as justification for selection of the 10 ft criteria. Also described specific planned activities not associated with this EAL. This wording does not alter the meaning or intent of the EAL.		
Difference	• Generic difference # 8 for "LESS THAN" applies. • This change is not a deviation because it does not alter the meaning or intent, such that classification of the event could be different between the NEI guidance and the plant EAL.		
Deviation	None		

NEI IC#	NEI IC Wording	PBNP IC#(s)	PBNP IC Wording
AA3	Release of Radioactive Material or Increases in Radiation Levels Within the Facility That Impedes Operation of Systems Required to Maintain Safe Operations or to Establish or Maintain Cold Shutdown	RA3	Release of Radioactive Material or Rises in Radiation Levels Within the Facility That Impedes Operation of Systems Required to Maintain Safe Operations or to Establish or Maintain Cold Shutdown
Mode App.	All		All
Site Specific Justification	None		
Difference	• Generic difference # 1 for "rise" applies. • This change is not a deviation because it does not alter the meaning or intent, such that classification of the event could be different between the NEI guidance and the plant EAL.		
Deviation	None		

NEI EAL#	NEI EAL Wording	PBNP EAL#(s)	PBNP EAL Wording
1	VALID (site-specific) radiation monitor readings GREATER THAN 15 mR/hr in areas requiring continuous occupancy to maintain plant safety functions: (Site-specific) list	RA3.1	VALID radiation monitor readings GREATER THAN 15 mR/hr in areas requiring continuous occupancy to maintain plant safety functions: Control Room (RE 101) **OR** Central Alarm Station CAS (by survey) **OR** Secondary Alarm Station SAS (by survey)
Site Specific Justification	*EAL -* ▪ Control Room, Central Alarm Station and Secondary Alarm Station are site specific areas requiring continuous occupancy to maintain plant safety functions. ▪ "by survey" has been added because automatic monitoring is not available in these areas. *Basis –* ▪ Referenced "high range" as the site specific containment monitor indicated in the NEI basis as well as normal indications for this monitor. This information has been added as an Operator aid. ▪ Listed "incore detector movement, radiography and movement of large components" to the list of examples where this EAL would not apply as these are site specific evolutions which may result in anticipated temporary radiation monitor increases. This wording does not alter the meaning or the intent of the EAL.		
Difference	▪ Generic difference # 6 for "GREATER THAN" applies. ▪ These changes are not a deviation because they do not alter the meaning or intent, such that classification of the event could be different between the NEI guidance and the plant EAL		

Deviation	None

NEI IC#	NEI IC Wording	PBNP IC#(s)	PBNP IC Wording
AA3	Release of Radioactive Material or Increases in Radiation Levels Within the Facility That Impedes Operation of Systems Required to Maintain Safe Operations or to Establish or Maintain Cold Shutdown	RA3	Release of Radioactive Material or Rises in Radiation Levels Within the Facility That Impedes Operation of Systems Required to Maintain Safe Operations or to Establish or Maintain Cold Shutdown
Mode App.	All		All
Site Specific Justification	None		
Difference	• Generic difference # 1 for "rise" applies. • This change is not a deviation because it does not alter the meaning or intent, such that classification of the event could be different between the NEI guidance and the plant EAL.		
Deviation	None		

NEI EAL#	NEI EAL Wording	PBNP EAL#(s)	PBNP EAL Wording
2	VALID (site-specific) radiation monitor readings GREATER THAN <site-specific> values in areas requiring infrequent access to maintain plant safety functions. (Site-specific) list	RA3.2	Any VALID radiation monitor reading GREATER THAN 1 R/hr in areas requiring infrequent access to maintain plant safety functions (Table H-1) **Table H-1 Vital Areas** • 1(2) Containment Building • Primary Auxiliary Building • Turbine Building (by survey) • Control Building • Diesel Generator Building (by survey) • Gas Turbine Building (by survey) • Circ Water Pump House (by survey)
Site Specific Justification	*EAL –* ▪ 1 R/hr - a valid radiation monitor reading greater than 1 R/hr would result in additional exposure control measures intended to maintain doses within normal occupational exposure guidelines and limits (e.g., current radiation protection and ALARA procedures, NMC administrative exposure limits, 10CFR20 limits, etc) and would impede necessary access. ▪ "by survey" - has been added because automatic monitoring is not available in these areas. ▪ Areas listed in Table H-1 were selected because they are areas or contiguous to areas requiring access to maintain plant safety functions. *Basis –* ▪ Included the wording above in the basis document as justification for the selection of 1 R/hr as the threshold value. ▪ Added "The Turbine Building, Diesel Generator Building, Gas Turbine Building and Circ Water Pump House have no installed radiation monitor capability [Ref. 3], therefore entry into the EAL		

	is based on radiation surveys in these areas." to describe why certain areas were indicated as by survey. This wording does not alter the meaning or intent of the EAL.
Difference	▪ "Generic differences #4 for "any" and #16 for "site-specific" apply. ▪ These changes are not a deviation because they do not alter the meaning or intent, such that classification of the event could be different between the NEI guidance and the plant EAL
Deviation	None

NEI IC#	NEI IC Wording	PBNP IC#(s)	PBNP IC Wording
AS1	Offsite Dose Resulting from an Actual or Imminent Release of Gaseous Radioactivity Exceeds 100 mR TEDE or 500 mR Thyroid CDE for the Actual or Projected Duration of the Release	RS1	Offsite Dose Resulting from an Actual or Imminent Release of Gaseous Radioactivity Exceeds 100 mrem TEDE or 500 mrem Thyroid CDE for the Actual or Projected Duration of the Release
Mode App.	All		All
Site Specific Justification	None		
Difference	"mrem" was used instead of "mR" based on a request for use of this nomenclature from the Wisconsin State Emergency Management Office		
Deviation	None		

NEI EAL#	NEI EAL Wording	PBNP EAL#(s)	PBNP EAL Wording
1	VALID reading on one or more of the following radiation monitors that exceeds or is expected to exceed the reading shown for 15 minutes or longer: (site-specific list) NOTE: If dose assessment results are available at the time of declaration, the classification should be based on EAL #2 instead of EAL #1.While necessary declarations should not be delayed awaiting results, the dose assessment should be initiated / completed in order to determine if the classification should be subsequently escalated.	RS1.1	NOTE: If dose assessment results are available at the time of declaration, the classification should be based on RS1.2 instead of RS1.1. While necessary declarations should not be delayed awaiting results, the dose assessment should be initiated / completed in order to determine if the classification should be subsequently escalated. VALID reading on any of the following radiation monitors that exceeds or is expected to exceed the reading shown for 15 minutes or longer.

Table R-3 Radiation Monitors

Monitor	Reading
1(2) RE-307 Containment Purge Exhaust Mid Range Gas	1.44E+00 µCi/cc
1(2) RE-309 Containment Purge Exhaust High Range Gas	1.44E+00 µCi/cc
RE-317 Auxiliary Building Exhaust Mid Range Gas	2.63E-01 µCi/cc
RE-319 Auxiliary Building Exhaust High Range Gas	2.63E-01 µCi/cc
RE-327 Drumming Area Exhaust Mid Range Gas	4.32E-01 µCi/cc
1(2) RE-231 Steam Line 1A(2A), 1(2) RE-232 Steam Line 1B(2B)	
1 Atmospheric Steam Dump Valve open	6.59E-02 µCi/cc
1 S/G Safety Valve open	2.48E-02 µCi/cc
2 S/G Safety Valves open	1.24E-02 µCi/cc
3 S/G Safety Valves open	8.25E-03 µCi/cc
4 S/G Safety Valves open	6.20E-03 µCi/cc

Site Specific Justification	*EAL* - ▪ The Table R-3 monitor list in RS1.1 includes monitors on all potential gaseous effluent release pathways. These monitors were selected because the detectors have an operating range that enables them to provide indication for the classification threshold. ▪ 1(2) RE-307 and –309 are noble gas monitors used to monitor all releases occurring from the Unit and 2 Containment purge ventilation stacks. RE-317 and –319 are noble gas monitors used to monitor all releases occurring from the Drumming Area ventilation stack (common for Unit 1 and 2). 1(2)RE-231 and 1(2)RE-232 are process monitors used to monitor all releases occurring through the Unit 1 and 2 atmospheric steam dump and S/G safety valves. ▪ The monitor reading thresholds for RS1.1 were determined by multiplying the monitor readings in EAL RG1.1 Table R-4 by 0.1 to determine the monitor reading thresholds corresponding to 500 mrem Thyroid CDE at or beyond the site boundary (1 mile downwind), which is the more limiting dose value for these calculations. The inputs used for the calculations in Reference 1 are described in the Basis section for EAL RG1. *Basis* – The above information was added to the basis document to provide justification for selection of the monitors listed in the EAL and determination of associated thresholds, and does not alter the meaning or intent of the EAL.
Difference	▪ Moved the 'Note' to the top of the EAL as a human performance improvement action. ▪ Generic difference # 4 for "any" applies. ▪ These changes are not a deviation because they do not alter the meaning or intent, such that classification of the event could be different between the NEI guidance and the plant EAL
Deviation	None

NEI IC#	NEI IC Wording	PBNP IC#(s)	PBNP IC Wording
AS1	Offsite Dose Resulting from an Actual or Imminent Release of Gaseous Radioactivity Exceeds 100 mR TEDE or 500 mR Thyroid CDE for the Actual or Projected Duration of the Release	RS1	Offsite Dose Resulting from an Actual or Imminent Release of Gaseous Radioactivity Exceeds 100 mrem TEDE or 500 mrem Thyroid CDE for the Actual or Projected Duration of the Release
Mode App.	All		All
Site Specific Justification	None		
Difference	"mrem" was used instead of "mR" based on a request for use of this nomenclature from the Wisconsin State Emergency Management Office		
Deviation	None		

NEI EAL#	NEI EAL Wording	PBNP EAL#(s)	PBNP EAL Wording
2	Dose assessment using actual meteorology indicates doses greater than 100 mR TEDE or 500 mR thyroid CDE at or beyond the site boundary	RS1.2	Dose assessment using actual meteorology indicates doses GREATER THAN 100 mrem TEDE or 500 mrem CDE at or beyond the site boundary.
Site Specific Justification	*EAL* – None *Basis* - None		
Difference	▪ "mrem" was used instead of "mR" based on a request for use of this nomenclature from the Wisconsin State Emergency Management Office ▪ Generic difference # 6 for "GREATER THAN" applies. ▪ These changes are not a deviation because they do not alter the meaning or intent, such that classification of the event could be different between the NEI guidance and the plant EAL		
Deviation	None		

NEI IC#	NEI IC Wording	PBNP IC#(s)	PBNP IC Wording
AS1	Offsite Dose Resulting from an Actual or Imminent Release of Gaseous Radioactivity Exceeds 100 mR TEDE or 500 mR Thyroid CDE for the Actual or Projected Duration of the Release	RS1	Offsite Dose Resulting from an Actual or Imminent Release of Gaseous Radioactivity Exceeds 100 mrem TEDE or 500 mrem Thyroid CDE for the Actual or Projected Duration of the Release
Mode App.	All		All
Site Specific Justification	None		
Difference	"mrem" was used instead of "mR" based on a request for use of this nomenclature from the Wisconsin State Emergency Management Office		
Deviation	None		

NEI EAL#	NEI EAL Wording	PBNP EAL#(s)	PBNP EAL Wording
3	A VALID reading sustained for 15 minutes or longer on perimeter radiation monitoring system greater than 100 mR/hr. [for sites having telemetered perimeter monitors]	N/A	N/A
Site Specific Justification	N/A		
Difference	Deleted NEI 99-01 Example EAL #3 because the plant is not equipped with a perimeter radiation monitoring system.		
Deviation	None		

NEI IC#	NEI IC Wording	PBNP IC#(s)	PBNP IC Wording
AS1	Offsite Dose Resulting from an Actual or Imminent Release of Gaseous Radioactivity Exceeds 100 mR TEDE or 500 mR Thyroid CDE for the Actual or Projected Duration of the Release	RS1	Offsite Dose Resulting from an Actual or Imminent Release of Gaseous Radioactivity Exceeds 100 mrem TEDE or 500 mrem Thyroid CDE for the Actual or Projected Duration of the Release
Mode App.	All		All
Site Specific Justification	None		
Difference	"mrem" was used instead of "mR" based on a request for use of this nomenclature from the Wisconsin State Emergency Management Office		
Deviation	None		

NEI EAL#	NEI EAL Wording	PBNP EAL#(s)	PBNP EAL Wording
4	Field survey results indicate closed window dose rates exceeding 100 mR/hr expected to continue for more than one hour; or analyses of field survey samples indicate thyroid CDE of 500 mR for one hour of inhalation, at or beyond the site boundary	RS1.3	Field survey results indicate closed window dose rates exceeding 100 mrem/hr expected to continue for more than one hour at or beyond the site boundary. **OR** Analysis of field survey samples indicate thyroid CDE of 500 mrem for one hour of inhalation, at or beyond the site boundary
Site Specific Justification	*EAL* – None *Basis* - None		
Difference	▪ "mrem" was used instead of "mR" based on a request for use of this nomenclature from the Wisconsin State Emergency Management Office ▪ The NEI word "analyses" has been replaced with "analysis." This is a grammatical change to allow the subject to agree with the verb "indicates." ▪ Generic difference # 9 for "OR" applies. ▪ These changes are not a deviation because they do not alter the meaning or intent, such that classification of the event could be different between the NEI guidance and the plant EAL		
Deviation	None		

NEI IC#	NEI IC Wording	PBNP IC#(s)	PBNP IC Wording
AG1	Offsite Dose Resulting from an Actual or Imminent Release of Gaseous Radioactivity Exceeds 1000 mR TEDE or 5000 mR Thyroid CDE for the Actual or Projected Duration of the Release Using Actual Meteorology	RG1	Offsite Dose Resulting from an Actual or Imminent Release of Gaseous Radioactivity Exceeds 1000 mrem TEDE or 5000 mrem Thyroid CDE for the Actual or Projected Duration of the Release Using Actual Meteorology
Mode App.	All	All	
Site Specific Justification	None		
Difference	"mrem" was used instead of "mR" based on a request for use of this nomenclature from the Wisconsin State Emergency Management Office		
Deviation	None		

NEI EAL#	NEI EAL Wording	PBNP EAL#(s)	PBNP EAL Wording
1	VALID reading on one or more of the following radiation monitors that exceeds or is expected to exceed the reading shown for 15 minutes or longer: (site-specific list) NOTE: If dose assessment results are available at the time of declaration, the classification should be based on EAL #2 instead of EAL #1.While necessary declarations should not be delayed awaiting results, the dose assessment should be initiated / completed in order to determine if the classification should be subsequently escalated.	RG1.1	NOTE: If dose assessment results are available at the time of declaration, the classification should be based on RG1.2 instead of RG1.1. While necessary declarations should not be delayed awaiting results, the dose assessment should be initiated / completed in order to determine if the classification should be subsequently escalated. VALID reading on any of the following radiation monitors that exceeds or is expected to exceed the reading shown 15 minutes or longer

Table R-4 Radiation Monitors

Monitor	Reading
1(2) RE-307 Containment Purge Exhaust Mid Range Gas	1.44E+01 µCi/cc
1(2) RE-309 Containment Purge Exhaust High Range Gas	1.44E+01 µCi/cc
RE-317 Auxiliary Building Exhaust Mid Range Gas	2.63E+00 µCi/cc
RE-319 Auxiliary Building Exhaust High Range Gas	2.63E+00 µCi/cc
RE-327 Drumming Area Exhaust Mid Range Gas	4.32E+00 µCi/cc
1(2) RE-231 Steam Line 1A(2A), 1(2) RE-232 Steam Line 1B(2B)	
1 Atmospheric Steam Dump Valve open	6.59E-01 µCi/cc
1 S/G Safety Valve open	2.48E-01 µCi/cc
2 S/G Safety Valves open	1.24E-01 µCi/cc
3 S/G Safety Valves open	8.25E-02 µCi/cc
4 S/G Safety Valves open	6.20E-02

					µCi/cc
Site Specific Justification	*EAL –* ▪ The Table R-4 monitor list in RG1.1 includes monitors on all potential gaseous effluent release pathways. These monitors were selected because the detectors have a high enough operating range that enables them to provide indication for the classification threshold. ▪ 1(2) RE-307 and –309 are noble gas monitors used to monitor all releases occurring from the Unit 1 and 2 Containment purge ventilation stacks. RE-317 and –319 are noble gas monitors used to monitor all releases occurring through Primary Auxiliary Building (PAB) ventilation stack (common for Unit 1 and 2). RE-327 is a noble gas monitor used to monitor all releases occurring from the Drumming Area ventilation stack (common for Unit 1 and 2). 1(2)RE-231 and 1(2)RE-232 are process monitors used to monitor all releases occurring through the Unit 1 and 2 atmospheric steam dump and S/G safety valves. ▪ The monitor reading thresholds for RG1.1 were determined using the Wisconsin Electric Dose Assessment Program (WEDAP) computer code and annual average meteorology [Ref.1]. The monitor readings determined in Reference 1 were back calculated from a dose value of 5000 mrem Thyroid CDE at or beyond the site boundary (1 mile downwind), which is the more limiting dose value for these calculations. The inputs used for the calculations in Reference 1 are as follows: Wind direction: from 30 degrees (NNE to SSW) Basis: FSAR Table 2.6-4 Annual average meteorology Wind speed: 10 mph Basis: FSAR Table 2.6-4 Annual average meteorology for stability class D (8-12 mph) Stability class: D Basis: FSAR Tables 2.6-2 and 2.6-3 Annual average meteorology - Stability index distribution and Stability Class Distribution in Percent of Total Observed and WEDAP default stability class Time after shutdown: 4 hrs. Basis: FSAR Appendix A-1 and DBD-T-46 Section 3.1 Station Blackout Coping Time (time to core damage) Release duration: 4 hrs. (default) Containment purge vs. forced vent: 1 purge fan Releases filtered except for 1(2) RE 231/232 Steam Line Monitors No lake breeze effect No precipitation Building Wake Effect (default) Source term: LOCA/Gap release inside containment except for 1(2) RE 231/232 Steam line Monitors which were based on Gap release/SGTR No containment sprays SGTR release path assumes SG water level <29% narrow range Calculation results for RE 231were used for monitor reading threshold for RE 232 (similar monitor and location) *Basis* – The wording above was added to the basis document as justification for the selection of monitors listed in the EAL and determination of the associated thresholds. This information does not alter the meaning or intent of the EAL.				
Difference	▪ Generic difference # 4 for "any" applies. ▪ Moved the 'Note' to the top of the EAL as a human performance improvement action. ▪ These changes are not a deviation because they do not alter the meaning or intent, such that classification of the event could be different between the NEI guidance and the plant EAL				
Deviation	None				

NEI IC#	NEI IC Wording	PBNP IC#(s)	PBNP IC Wording
AG1	Offsite Dose Resulting from an Actual or Imminent Release of Gaseous Radioactivity Exceeds 1000 mR TEDE or 5000 mR Thyroid CDE for the Actual or Projected Duration of the Release Using Actual Meteorology	RG1	Offsite Dose Resulting from an Actual or Imminent Release of Gaseous Radioactivity Exceeds 1000 mrem TEDE or 5000 mrem Thyroid CDE for the Actual or Projected Duration of the Release Using Actual Meteorology
Mode App.	All		All
Site Specific Justification	None		
Difference	"mrem" was used instead of "mR" based on a request for use of this nomenclature from the Wisconsin State Emergency Management Office		
Deviation	None		

NEI EAL#	NEI EAL Wording	PBNP EAL#(s)	PBNP EAL Wording
2	Dose assessment using actual meteorology indicates doses greater than 1000 mR TEDE or 5000 mR thyroid CDE at or beyond the site boundary	RG1.2	Dose assessment using actual meteorology indicates doses GREATER THAN 1000 mrem TEDE or 5000 mrem thyroid CDE at or beyond the site boundary
Site Specific Justification	*EAL* – None *Basis* - None		
Difference	▪ "mrem" was used instead of "mR" based on a request for use of this nomenclature from the Wisconsin State Emergency Management Office ▪ Generic difference # 6 for "GREATER THAN" applies. ▪ These changes are not a deviation because they do not alter the meaning or intent, such that classification of the event could be different between the NEI guidance and the plant EAL		
Deviation	None		

NEI IC#	NEI IC Wording	PBNP IC#(s)	PBNP IC Wording
AG1	Offsite Dose Resulting from an Actual or Imminent Release of Gaseous Radioactivity Exceeds 1000 mR TEDE or 5000 mR Thyroid CDE for the Actual or Projected Duration of the Release Using Actual Meteorology	RG1	Offsite Dose Resulting from an Actual or Imminent Release of Gaseous Radioactivity Exceeds 1000 mrem TEDE or 5000 mrem Thyroid CDE for the Actual or Projected Duration of the Release Using Actual Meteorology
Mode App.	All		All
Site Specific Justification	None		
Difference	"mrem" was used instead of "mR" based on a request for use of this nomenclature from the Wisconsin State Emergency Management Office		
Deviation	None		

NEI EAL#	NEI EAL Wording	PBNP EAL#(s)	PBNP EAL Wording
3	A VALID reading sustained for 15 minutes or longer on perimeter radiation monitoring system greater than 1000 mR/hr. [for sites having telemetered perimeter monitors]	N/A	N/A
Site Specific Justification	N/A		
Difference	Deleted NEI 99-01 Example EAL #3 because the plant is not equipped with a perimeter radiation monitoring system.		
Deviation	None		

NEI IC#	NEI IC Wording	PBNP IC#(s)	PBNP IC Wording
AG1	Offsite Dose Resulting from an Actual or Imminent Release of Gaseous Radioactivity Exceeds 1000 mR TEDE or 5000 mR Thyroid CDE for the Actual or Projected Duration of the Release Using Actual Meteorology	RG1	Offsite Dose Resulting from an Actual or Imminent Release of Gaseous Radioactivity Exceeds 1000 mrem TEDE or 5000 mrem Thyroid CDE for the Actual or Projected Duration of the Release Using Actual Meteorology
Mode App.	All		All
Site Specific Justification	None		
Difference	"mrem" was used instead of "mR" based on a request for use of this nomenclature from the Wisconsin State Emergency Management Office		
Deviation	None		

NEI EAL#	NEI EAL Wording	PBNP EAL#(s)	PBNP EAL Wording
4	Field survey results indicate closed window dose rates exceeding 1000 mR/hr expected to continue for more than one hour; or analyses of field survey samples indicate thyroid CDE of 5000 mR for one hour of inhalation, at or beyond site boundary.	RG1.3	Field survey results indicate closed window dose rates exceeding 1000 mrem/hr expected to continue for more than one hour, at or beyond site boundary. **OR** Analysis of field survey samples indicate thyroid CDE of 5000 mrem for one hour of inhalation, at or beyond site boundary
Site Specific Justification	*EAL* – None *Basis* - None		
Difference	▪ "mrem" was used instead of "mR" based on a request for use of this nomenclature from the Wisconsin State Emergency Management Office ▪ The NEI word "analyses" has been replaced with "analysis." This is a grammatical change to allow the subject to agree with the verb "indicates." ▪ Generic difference # 9 for "**OR**" applies. ▪ These changes are not a deviation because they do not alter the meaning or intent, such that classification of the event could be different between the NEI guidance and the plant EAL		
Deviation	None		

COLD SHUTDOWN/REFUELING SYSTEM MALFUNCTION

Site Specific
Information/Differences/Deviations
Justifications

NEI IC#	NEI IC Wording	PBNP IC#(s)	PBNP IC Wording
CU1	RCS Leakage	CU1	RCS Leakage
Mode App.	Cold Shutdown		5-Cold Shutdown
Site Specific Justifications	None		
Difference	• Generic difference # 3 for "Unusual Event" applies. • This change is not a deviation because it does not alter the meaning or intent, such that classification of the event could be different between the NEI guidance and the plant EAL		
Deviation	None		

NEI EAL#	NEI EAL Wording	PBNP EAL#(s)	PBNP EAL Wording
1	Unidentified or pressure boundary leakage greater than 10 gpm	CU1.1	Unidentified or pressure boundary leakage GREATER THAN 10 gpm
Site Specific Justifications	*EAL* – None *Basis* - None		
Difference	• Generic Difference # 3 for "Unusual Event" and # 6 for "GREATER THAN" apply. • These changes are not a deviation because they do not alter the meaning or intent, such that classification of the event could be different between the NEI guidance and the plant EAL		
Deviation	None		

NEI IC#	NEI IC Wording	PBNP IC#(s)	PBNP IC Wording
CU1	RCS Leakage	CU1	RCS Leakage
Mode App.	Cold Shutdown		5-Cold Shutdown
Site Specific Justifications	None		
Difference	• Generic difference # 3 for "Unusual Event" applies. • This change is not a deviation because it does not alter the meaning or intent, such that classification of the event could be different between the NEI guidance and the plant EAL		
Deviation	None		

NEI EAL#	NEI EAL Wording	PBNP EAL#(s)	PBNP EAL Wording
2	Identified leakage greater than 25 gpm	CU1.2	Identified leakage GREATER THAN 25 gpm
Site Specific Justifications	*EAL* – None *Basis* - None		
Difference	• Generic difference # 6 for "GREATER THAN" applies. • This change is not a deviation because it does not alter the meaning or intent, such that classification of the event could be different between the NEI guidance and the plant EAL		
Deviation	None		

NEI IC#	NEI IC Wording	PBNP IC#(s)	PBNP IC Wording
CU2	UNPLANNED Loss of RCS Inventory with Irradiated Fuel in the RPV	CU2	UNPLANNED Loss of RCS Inventory with Irradiated Fuel in the Reactor Vessel
Mode App.	Refueling		6-Refueling
Site Specific Justifications	None		
Difference	• Generic difference # 3 for "Unusual Event" and # 12 for "Reactor Vessel" apply. • These changes are not a deviation because they do not alter the meaning or intent, such that classification of the event could be different between the NEI guidance and the plant EAL		
Deviation	None		

NEI EAL#	NEI EAL Wording	PBNP EAL#(s)	PBNP EAL Wording
1	UNPLANNED RCS level decrease below the RPV flange for ≥ 15 minutes	CU2.1	UNPLANNED RCS level lowering below the Reactor Vessel flange (89.1%) for GREATER THAN OR EQUAL TO 15 minutes.
Site Specific Justifications	*EAL –* ▪ 89.1% is the site specific value from the reactor vessel level indicator at the flange per OP 4D Part 3, Draining Reactor Cavity and Reactor Coolant System Reactor Vessel Level Comparison Table **Description / Elevation / LI-447/LI-447A RV Lvl Ind / LI-447B or Tygon** NIS Top Hats / 41' 3" / 96.1% / 96 1/8" Incore Seal Table / 41' 2" / 95.1% / 95 1/8" Steam Generator Tubesheet Bottom / 41' 1 1/2" / greater than 94.6% / 94 5/8" Reactor Vessel Flange / 40' 8" / 89.1% / 89 1/8" RCP Volute Flange / 38' 3" / 60.1% / 60 1/8" Steam Generator Channel Head / 36' 2 1/2" / 35.6% / 35 5/8" Reactor Vessel Th Nozzle Top / 35' 7 3/8" / 29.0% / 29" Reactor Vessel Th Nozzle 3/4 / 35' 5/8" / 22.0% / 22" Reactor Vessel Th Nozzle Centerline / 34' 5 3/8" / 14.5% / 14 1/2" Reactor Vessel Th nozzle Bottom / 33' 2 7/8" / 0% / 0" *Basis* - The words "The Reactor Vessel flange is at elevation 40 ft 8 in., which is 89% on LI-447/447A or 89 in. on LI-447B [Ref. 3]." Have been added to the basis as justification for the 89 inch level selected and do not alter the meaning or intent of the EAL.		
Difference	▪ Generic differences # 2 for "lowering", # 3 for "Unusual Event", # 7 for "GREATER THAN OR EQUAL TO", and # 12 for "Reactor Vessel" apply. ▪ These changes are not a deviation because they do not alter the meaning or intent, such that classification of the event could be different between the NEI guidance and the plant EAL		

Deviation	None

NEI IC#	NEI IC Wording	PBNP IC#(s)	PBNP IC Wording
CU2	UNPLANNED Loss of RCS Inventory with Irradiated Fuel in the RPV	CU2	UNPLANNED Loss of RCS Inventory with Irradiated Fuel in the Reactor Vessel
Mode App.	Refueling		6-Refueling
Site Specific Justifications	None		
Difference	• Generic difference # 3 for "Unusual Event" and # 12 for "Reactor Vessel" apply. • These changes are not a deviation because they do not alter the meaning or intent, such that classification of the event could be different between the NEI guidance and the plant EAL		
Deviation	None		

NEI EAL#	NEI EAL Wording	PBNP EAL#(s)	PBNP EAL Wording
2	a. Loss of RPV inventory as indicated by unexplained {site-specific} sump and tank level increase **AND** b. RPV level cannot be monitored	CU2.2	Loss of Reactor Vessel inventory as indicated by unexplained Containment Sump A <u>or</u> Waste Hold Up Tank level rise. **AND** Reactor Vessel level cannot be monitored
Site Specific Justifications	*EAL* - "Containment Sump A or Waste Hold Up Tank " are the site specific indications for loss of reactor vessel level inventory. Operators would need to determine that Reactor Vessel inventory loss was occurring by observing Containment Sump A or Waste Holdup Tank level changes [Ref. 1, 2]. Sump and tank level rises must be evaluated against other potential sources of leakage such as cooling water sources inside the containment to ensure they are indicative of RCS leakage. *Basis* – None		
Difference	▪ Generic differences # 1 for "rise" and # 3 for "Unusual Event" apply. ▪ "<u>or</u>" was used instead of "and" because indications of RCS Inventory loss may be evident in either case thus requiring classification of the event. Maintaining "and" in this situation would not allow for classification unless indication were present in both instances. ▪ These changes are not a deviation because they do not alter the meaning or intent, such that classification of the event could be different between the NEI guidance and the plant EAL		
Deviation	None		

NEI IC#	NEI IC Wording	PBNP IC#(s)	PBNP IC Wording
CU3	Loss of All Offsite Power to Essential Busses for Greater Than 15 Minutes	CU3	Loss of All Offsite Power to Essential Busses for GREATER THAN 15 minutes
Mode App.	Cold Shutdown, Refueling		5-Cold Shutdown, 6-Refueling
Site Specific Justifications	None		
Difference	• Generic difference # 3 for "Unusual Event" and # 6 for "GREATER THAN" apply • These changes are not a deviation because they do not alter the meaning or intent, such that classification of the event could be different between the NEI guidance and the plant EAL		
Deviation	None		

NEI EAL#	NEI EAL Wording	PBNP EAL#(s)	PBNP EAL Wording
1	a. Loss of power to (site-specific) transformers for greater than 15 minutes. **AND** b. At least (site-specific) emergency generators are supplying power to emergency busses	CU3.1	Loss of all offsite power to both safety related 4160 VAC buses 1(2)-A05 and 1(2)-A06 for GREATER THAN 15 minutes **AND** At least 1 emergency generator is supplying power to an emergency bus.
Site Specific Justifications	*EAL -* • Safety related 4160 VAC buses 1(2) – A05 and 1(2) – A06" - The 4160 VAC system includes two safety-related (essential) buses per unit, 1(2)-A05 (A train) and 1(2)-A06 (B train). Offsite power from the 345 KVAC system is stepped down through the 13.8 KVAC system to the Low Voltage Station Auxiliary Transformer (LVSAT) 1(2)-X04. The LVSATs provide power to 4160 VAC switching buses 1(2)-A03 and 1(2)-A04, which in turn provide power to safety-related buses 1(2)-A05 and 1(2)-A06. ▪ "1 emergency generator" - During emergency or abnormal situations, the 4160 VAC system is supplied by emergency diesel generators (G01 through G04) or the gas turbine generator (G05). Following a loss of power, ECA 0.0 provides guidance to restore power to any 4160 VAC safety-related bus. *Basis –* ▪ The words "The 4160 VAC system includes two safety-related (essential) buses per unit, 1(2)-A05 (A train) and 1(2)-A06 (B train). Offsite power from the 345 KVAC system is stepped down through the 13.8 KVAC system to the Low Voltage Station Auxiliary Transformer (LVSAT) 1(2)-X04. The LVSATs provide power to 4160 VAC switching buses 1(2)-A03 and 1(2)-A04, which in turn provide power to safety-related buses 1(2)-A05 and 1(2)-A06." were added as justification for selection of these busses for this EAL. ▪ The words "During emergency or abnormal situations, the 4160 VAC system is supplied by emergency diesel generators (G01 through G04) or the gas turbine generator (G05). Following a loss of power, ECA 0.0 provides guidance to restore power to any 4160 VAC safety-related bus. For the purpose of classification under this EAL, offsite power sources include any of the following ▪ 345 KVAC system supplying power to the 13.8 KVAC system and the unit LVSATs		

	▪ 345 KVAC system supplying power to the 13.8 KVAC system and the unit LVSATs ▪ Backfeeding power to the UATs through the 19 KVAC system and the # 3 for "Unusual Event", main step-up transformer X-01. Note that the time required to effect the backfeed is likely longer than the fifteen-minute interval. If off-normal plant conditions have already established the backfeed, however, its power to the safety-related buses may be considered an offsite power source." were added as justification for sources of off site power.
Difference	▪ Generic differences # 3 for "Unusual Event", # 15 for "offsite" and # 6 for "GREATER THAN" apply. ▪ The NEI example EAL condition "Loss of power to (site-specific) transformers for greater than 15 minutes" has been changed to "Loss of offsite power to both safety-related...buses...for GREATER THAN 15 min." The PBNP wording focuses the classification on the loss of offsite power capability rather than the status of one or more transformers that may or may not be capable of powering the essential buses. Due to the nature of the off site power sources through two onsite transformers, it would be possible to maintain power to the transformers and lose power to the buses which would result in loss of offsite power, yet, under the NEI wording and event would not be classified as long as there was power to the transformers. In order to ensure a classification is made in accordance with the NEI Basis, loss of power to the busses was used in the EAL wording. ▪ These changes are not a deviation because they do not alter the meaning or intent, such that classification of the event could be different between the NEI guidance and the plant EAL
Deviation	None

NEI IC#	NEI IC Wording	PBNP IC#(s)	PBNP IC Wording
CU4	UNPLANNED Loss of Decay Heat Removal Capability with Irradiated Fuel in the RPV	CU4	UNPLANNED Loss of Decay Heat Removal Capability with Irradiated Fuel in the Reactor Vessel
Mode App.	Cold Shutdown, Refueling		5-Cold Shutdown, 6-Refueling
Site Specific Justifications	None		
Difference	• Generic difference# 3 for "Unusual Event" and # 12 for "Reactor Vessel" apply. • These changes are not a deviation because they do not alter the meaning or intent, such that classification of the event could be different between the NEI guidance and the plant EAL		
Deviation	None		

NEI EAL#	NEI EAL Wording	PBNP EAL#(s)	PBNP EAL Wording
1	An UNPLANNED event results in RCS temperature exceeding the Technical Specification cold shutdown temperature limit	CU4.1	An UNPLANNED event results in RCS temperature exceeding 200°F
Site Specific Justifications	"200 °F" is the site specific value per Technical Specification cold shutdown temperature limit. (TS Table 1.1-1)		
Difference	*EAL* - • Generic difference # 3 for "Unusual Event" applies. • This change is not a deviation because it does not alter the meaning or intent, such that classification of the event could be different between the NEI guidance and the plant EAL *Basis* - None		
Deviation	None		

NEI IC#	NEI IC Wording	PBNP IC#(s)	PBNP IC Wording
CU4	UNPLANNED Loss of Decay Heat Removal Capability with Irradiated Fuel in the RPV	CU4	UNPLANNED Loss of Decay Heat Removal Capability with Irradiated Fuel in the Reactor Vessel
Mode App.	Cold Shutdown, Refueling		5-Cold Shutdown, 6-Refueling
Site Specific Justifications	None		
Difference	• Generic difference #3 for "Unusual Event" and # 12 for "Reactor Vessel" apply. • These changes are not a deviation because they do not alter the meaning or intent, such that classification of the event could be different between the NEI guidance and the plant EAL		
Deviation	None		

NEI EAL#	NEI EAL Wording	PBNP EAL#(s)	PBNP EAL Wording
2	Loss of all RCS temperature and RPV level indication for > 15 minutes	CU4.2	Loss of all RCS temperature <u>and</u> Reactor Vessel level indication for GREATER THAN 15 minutes.
Site Specific Justifications	*EAL* - None *Basis* – The following information was added to the basis section as justification for RCS temperature indication and Reactor Vessel level indication and does not alter the meaning or the intent of the EAL Reactor Vessel water level is normally monitored using the following instruments [Ref. 2, 4]: • LT-494, 495 (RVLIS) Reactor Vessel WR Water Level (0 - 125 ft) • LT-496, 497 (RVLIS) Reactor Vessel NR Water Level (0 - 45 ft) • LT-447, 447A Reduced Inventory RV Water Level (0 - 100 in.) LT-494, 495, 496, 497 provide appropriate level signals to allow the Control Room operator to monitor the associated parameter during design basis accidents. These instruments are only to be used for trend information and are not used for definitive Reactor Vessel level indication when draining the reactor cavity or RCS. LT-447, 447A provide Reactor Vessel water level indication in the Control Room during reduced RCS inventory condition. They are calibrated to indicate level from approximately 10 in. above the vessel flange to a level approximately 90 inches below the vessel flange (bottom of the hot leg). The instrument scale range is 0 -100% which corresponds to 0 -100 in. The readout can be displayed on the Plant Process Computer System (PPCS) at the operator's desk and on the control board with a readout of ±0.1 inches while at mid-loop. This provides the ability to read the level from the bottom of the reactor coolant pipe (0% or 33 ft 2-7/8 in. elev.) to well above the Reactor Vessel head flange (89.1% or 40 ft 8 in. elev.). Local indicator LI-447B, RC Reduced Inventory Level Indicator (0 -100 in.), also provides Reactor Vessel water level indication. 0 in. on LI-447B corresponds to 0% on LI-447/447A. Several instruments are capable of providing indication of RCS temperature with respect to the Technical Specification cold shutdown temperature limit (200°F). These include [Ref. 2, 3]: • Tavg instrumentation		

	• TE-1 thru 39, Core Exit Thermocouples (50 - 1600°F) • TE-450A, 450C, 451A, 451C, Cold Leg Loop WR Temperature (50 - 750°F) • TE-450B, 450D, 451B, 451D, Hot Leg Loop WR Temperature (50 - 750°F) • TE-630, RHR Inlet Temperature Loop WR Temperature Elements provide wide range RCS temperature signals for monitoring heatup and cooldown, and unusual events such as natural circulation, where the RTDs in the loop bypass lines do not provide meaningful temperature signals. Only Loop B Cold Leg WR temperature indication uncertainties have been analyzed to ensure the PTLR limits are maintained. Loop B cold leg WR temperature channel is used when on RHR. TC_{AVG} is preferred thermocouple indication and provides an average of all thirty-nine thermocouples and the trend recorders can look at one of eight or an average of all eight thermocouples.
Difference	▪ Generic differences # 3 for "Unusual Event", # 6 for "GREATER THAN" # 11 for "and" and # 12 for "Reactor Vessel" apply. ▪ These changes are not a deviation because they do not alter the meaning or intent, such that classification of the event could be different between the NEI guidance and the plant EAL
Deviation	None

NEI IC#	NEI IC Wording	PBNP IC#(s)	PBNP IC Wording
CU5	Fuel Clad Degradation	N/A	N/A
Mode App.	Cold Shutdown, Refueling		N/A
Site Specific Justifications	N/A		
Difference	None		
Deviation	None		

NEI EAL#	NEI EAL Wording	PBNP EAL#(s)	PBNP EAL Wording
1	(Site-specific) radiation monitor readings indicating fuel clad degradation greater than Technical Specification allowable limits	N/A	N/A
Site Specific Justifications	N/A		
Difference	None		
Deviation	There are no radiation monitors that provide fuel clad degradation during the Refueling Mode. Additionally, Technical Specifications for use of the Failed Fuel Monitor (T.S. 3.6.16) only apply to Modes 1, 2, and 3. Declaration of an event due to increased radiation monitor reading would be completed in accordance with RU1.2, RU2.1, and RU2.2 during Cold Shutdown and Refueling Modes.		

NEI IC#	NEI IC Wording	PBNP IC#(s)	PBNP IC Wording
CU5	Fuel Clad Degradation	N/A	N/A
Mode App.	Cold Shutdown, Refueling		5-Cold Shutdown, 6-Refueling
Site Specific Justifications	None		
Difference	None		
Deviation	None		

NEI EAL#	NEI EAL Wording	PBNP EAL#(s)	PBNP EAL Wording
2	(Site-specific) coolant sample activity value indicating fuel clad degradation greater than Technical Specification allowable limits	N/A	N/A
Site Specific Justifications	N/A		
Difference	None		
Deviation	There are no radiation monitors available to indicate fuel clad degradation during the Refueling Mode. Additionally, Technical Specifications for RCS Specific Activity (T.S. 3.6.16) only apply to Modes 1, 2, and 3. Declaration of an event due to increased radiation monitor reading would be completed in accordance with RU1.2, RU2.1, and RU2.2 during Cold Shutdown and Refueling Modes.		

NEI IC#	NEI IC Wording	PBNP IC#(s)	PBNP IC Wording
CU6	UNPLANNED Loss of All Onsite or Offsite Communications Capabilities	CU6	UNPLANNED Loss of All Onsite or Offsite Communications Capabilities
Mode App.	Cold Shutdown, Refueling		5-Cold Shutdown, 6-Refueling
Site Specific Justifications	None		
Difference	• Generic difference # 3 for "Unusual Event" applies. • This change is not a deviation because it does not alter the meaning or intent, such that classification of the event could be different between the NEI guidance and the plant EAL		
Deviation	None		

NEI EAL#	NEI EAL Wording	PBNP EAL#(s)	PBNP EAL Wording
1	Loss of all (site-specific list) onsite communications capability affecting the ability to perform routine operations	CU6.1	Loss of all Table C-1 onsite communications capability affecting the ability to perform routine operations **Table C-1 Onsite Communications Systems** • Plant Public Address System • Security Radio • Commercial Phone System • Portable radios • Sound power phones
Site Specific Justifications	*EAL* - Table C-1 lists site specific equipment used for normal onsite communications. The availability of one method of ordinary onsite communications is sufficient to inform state and local authorities of plant problems. *Basis* - None		
Difference	• Generic differences # 3 for "Unusual Event" and # 16 for "site-specific" apply. • These changes are not a deviation because they do not alter the meaning or intent, such that classification of the event could be different between the NEI guidance and the plant EAL		
Deviation	None		

NEI IC#	NEI IC Wording	PBNP IC#(s)	PBNP IC Wording
SU6 & CU6	UNPLANNED Loss of All Onsite or Offsite Communications Capabilities	CU6	UNPLANNED Loss of All Onsite or Offsite Communications Capabilities
Mode App.	Cold Shutdown, Refueling		5-Cold Shutdown, 6-Refueling
Site Specific Justifications	None		
Difference	• Generic difference # 3 for "Unusual Event" applies. • This change is not a deviation because it does not alter the meaning or intent, such that classification of the event could be different between the NEI guidance and the plant EAL		
Deviation	None		

NEI EAL#	NEI EAL Wording	PBNP EAL#(s)	PBNP EAL Wording
2	Loss of all (site-specific list) offsite communications capability	CU6.2	Loss of all Table C-2 offsite communications capability **Table C-2 Offsite Communications Systems** • Emergency Notification System (ENS) • Health Physics Network (HPN) • Operations Control Counterpart Link (OCCL) • Management Counterpart Link (MCL) • Protective Measures Counterpart Link (PMCL) • Reactor Safety Counterpart Link (RSCL) • Nuclear Accident Reporting System (NARS) • Commercial Phone System • General Telephone Lines • Manitowoc County Sheriff's Department Radio
Site Specific Justificati ons	*EAL* - Table C-1 lists site specific equipment used for offsite communications. The availability of one method of ordinary offsite communications is sufficient to inform state and local authorities of plant problems. *Basis* - None		
Difference	• Generic differences # 3 for "Unusual Event" and # 16 for "site-specific" apply. • These changes are not a deviation because they do not alter the meaning or intent, such that classification of the event could be different between the NEI guidance and the plant EAL		
Deviation	None		

NEI IC#	NEI IC Wording	PBNP IC#(s)	PBNP IC Wording
CU7	UNPLANNED Loss of Required DC Power for Greater than 15 Minutes	CU7	UNPLANNED Loss of Required DC Power for GREATER THAN 15 Minutes
Mode App.	Cold Shutdown, Refueling		5-Cold Shutdown, 6-Refueling
Site Specific Justifications	None		
Difference	• Generic differences # 3 for "Unusual Event" and # 6 for GREATER THAN apply. • These changes are not a deviation because they do not alter the meaning or intent, such that classification of the event could be different between the NEI guidance and the plant EAL		
Deviation	None		

NEI EAL#	NEI EAL Wording	PBNP EAL#(s)	PBNP EAL Wording
1	a. UNPLANNED Loss of Vital DC power to required DC busses based on (site-specific) bus voltage indications. **AND** b. Failure to restore power to at least one required DC bus within 15 minutes from the time of loss.	CU7.1	UNPLANNED Loss of vital DC power to required DC busses based on bus voltage indications LESS THAN 115 VDC **AND** Failure to restore power to at least one required DC bus within 15 minutes from the time of loss
Site Specific Justifications	*EAL* - "LESS THAN OR EQUAL TO 115 VDC" –105 VDC was not selected because it is the voltage of a completely discharged battery. By the time the bus voltage has degraded to below 105 VDC, the ability to monitor and control important plant safety functions would be severely compromised. 115 VDC represents a value at which some plant functions would begin to be lost. 115 VDC is below the minimum normal operating voltage, to preclude entering this EAL due to normal operational situations. [Ref FSAR Section 8.7] *Basis* – The following wording was added to the basis section – The safety-related 125 VDC system consists of four main distribution buses: D-01, D-02, D-03, and D-04. The fifteen-minute interval was selected as a threshold to exclude transient or momentary power losses. This wording implements the intent of the NEI Basis Document. Additionally, the NEI document recommends a voltage that is approximately 105 VDC. Selection of the 115 VDC value implements the intent of this statement and so is not a deviation.		
Difference	• Generic difference # 3 for "Unusual Event" applies. • This change is not a deviation because it does not alter the meaning or intent, such that classification of the event could be different between the NEI guidance and the plant EAL		
Deviation	None		

NEI IC#	NEI IC Wording	PBNP IC#(s)	PBNP IC Wording
CU8	Inadvertent Criticality	CU8	Inadvertent Criticality
Mode App.	Cold Shutdown, Refueling		5-Cold Shutdown, 6-Refueling
Site Specific Justifications	None		
Difference	• Generic difference # 3 for "Unusual Event" applies. • This change is not a deviation because it does not alter the meaning or intent, such that classification of the event could be different between the NEI guidance and the plant EAL		
Deviation	None		

NEI EAL#	NEI EAL Wording	PBNP EAL#(s)	PBNP EAL Wording
2	An UNPLANNED sustained positive startup rate observed on nuclear instrumentation	CU8.1	An UNPLANNED sustained positive startup rate observed on nuclear instrumentation
Site Specific Justifications	*EAL* – None *Basis* – The wording "This condition can be identified using startup rate monitors (NI-31D/32D - Source Range Startup Rate, and NI-35D/36D - Intermediate Range Startup Rate) [Ref. 1]. " was added to the basis document as additional information on the site specific startup rate monitors as and aid to operators and does not alter the meaning or the intent of the EAL.		
Difference	• Generic difference # 3 for "Unusual Event" applies. • This change is not a deviation because it does not alter the meaning or intent, such that classification of the event could be different between the NEI guidance and the plant EAL		
Deviation	None		

NEI IC#	NEI IC Wording	PBNP IC#(s)	PBNP IC Wording
CA1	Loss of RCS Inventory	CA1	Loss of RCS Inventory
Mode App.	Cold Shutdown		5-Cold Shutdown
Site Specific Justifications	None		
Difference	None		
Deviation	None		

NEI EAL#	NEI EAL Wording	PBNP EAL#(s)	PBNP EAL Wording
1	Loss of RCS inventory as indicated by RPV level less than {site-specific level}. (low-low ECCS actuation setpoint) (BWR) (bottom ID of the RCS loop) (PWR)	CA1.1	Loss of RCS inventory as indicated by Reactor Vessel level LESS THAN 6% on LI-447 / LI-447A
Site Specific Justifications	*EAL* - "6% on LI-447 / LI-447A when aligned" is the site specific level indicator used for determining reactor vessel inventory. 6% corresponds to the 6 inch level of the RCS Loop was chosen because at this level remote RCS level indication may be lost and loss of suction to decay heat removal systems has occurred. The 6 inch level is above the CS2 setpoint of 0, the level equal to the bottom of the Reactor Vessel loop penetration. 0% is the site specific value from the reactor vessel level indicator at the bottom of the RCS loop per OP 4D Draining the Reactor Cavity and Reactor Coolant System **Reactor Vessel Level Comparison Table** **Description / Elevation / LI-447/LI-447A RV Lvl Ind / LI-447B or Tygon** NIS Top Hats / 41' 3" / 96.1% / 96 1/8" Incore Seal Table / 41' 2" / 95.1% / 95 1/8" Steam Generator Tubesheet Bottom / 41' 1 1/2" / greater than 94.6% / 94 5/8" Reactor Vessel Flange / 40' 8" / 89.1% / 89 1/8" RCP Volute Flange / 38' 3" / 60.1% / 60 1/8" Steam Generator Channel Head / 36' 2 1/2" / 35.6% / 35 5/8" Reactor Vessel Th Nozzle Top / 35' 7 3/8" / 29.0% / 29" Reactor Vessel Th Nozzle 3/4 / 35' 5/8" / 22.0% / 22" Reactor Vessel Th Nozzle Centerline / 34' 5 3/8" / 14.5% / 14 1/2" Reactor Vessel Th nozzle Bottom / 33' 2 7/8" / 0% / 0" *Basis* – The wording "During preparations for refueling, reactor vessel level indication may not be available. In this instance, classification would be completed under CA1.2 for sump and tank level indications." was added as an operator aid in election of the proper EAL bases on available indications. This wording does not alter the meaning or intent of the EAL.		
Difference	▪ Generic difference # 8 for "LESS THAN" and # 12 for "Reactor Vessel" apply ▪ These changes are not a deviation because they do not alter the meaning or intent, such that		

	classification of the event could be different between the NEI guidance and the plant EAL
Deviation	None

NEI IC#	NEI IC Wording	PBNP IC#(s)	PBNP IC Wording
CA1	Loss of RCS Inventory	CA1	Loss of RCS Inventory
Mode App.	Cold Shutdown		5-Cold Shutdown
Site Specific Justifications	None		
Difference	None		
Deviation	None		

NEI EAL#	NEI EAL Wording	PBNP EAL#(s)	PBNP EAL Wording
2	a. Loss of RCS inventory as indicated by unexplained {site-specific} sump and tank level increase **AND** b. RCS level cannot be monitored for > 15 minutes	CA1.2	Loss of RCS inventory as indicated by unexplained Containment Sump A level or Waste Hold Up Tank level rise **AND** RCS level cannot be monitored for GREATER THAN 15 minutes.
Site Specific Justifications	*EAL* - "Containment Sump A or Waste Hold Up Tank " " are the site specific indications for loss of reactor vessel level inventory. Operators would need to determine that Reactor Vessel inventory loss was occurring by observing Containment Sump A or Waste Holdup Tank level changes [Ref. 1, 2]. Sump and tank level rises must be evaluated against other potential sources of leakage such as cooling water sources inside the containment to ensure they are indicative of RCS leakage. *Basis* - None		
Difference	▪ Generic differences # 6 for "GREATER THAN" and # 12 for "Reactor Vessel" apply. ▪ "or" was used instead of "and" because indications of RCS Inventory loss may be evident in either case thus requiring classification of the event. Maintaining "and" in this situation would not allow for classification unless indication were present in both instances. ▪ These changes are not a deviation because they do not alter the meaning or intent, such that classification of the event could be different between the NEI guidance and the plant EAL		
Deviation	None		

NEI IC#	NEI IC Wording	PBNP IC#(s)	PBNP IC Wording
CA2	Loss of RPV Inventory with Irradiated Fuel in the Reactor Vessel	CA2	Loss of Reactor Vessel Inventory with Irradiated Fuel in the Reactor Vessel
Mode App.	Refueling		6-Refueling
Site Specific Justifications	None		
Difference	• Generic difference # 12 for "Reactor Vessel" applies. • This change is not a deviation because it does not alter the meaning or intent, such that classification of the event could be different between the NEI guidance and the plant EAL		
Deviation	None		

NEI EAL#	NEI EAL Wording	PBNP EAL#(s)	PBNP EAL Wording
1	Loss of RPV inventory as indicated by RPV level less than {site-specific level}.	CA2.1	Loss of Reactor Vessel inventory as indicated by Reactor Vessel level LESS THAN 6% on LI-447 / LI-447A

Site Specific Justifications

EAL - "6% on LI-447 / LI-447A when aligned" is the site specific level indicator used for determining reactor vessel inventory. 6% corresponds to the 6 inch level of the RCS Loop was chosen because at this level remote RCS level indication may be lost and loss of suction to decay heat removal systems has occurred. The 6 inch level is above the CS2 setpoint of 0, the level equal to the bottom of the Reactor Vessel loop penetration. 0% is the site specific value from the reactor vessel level indicator at the bottom of the RCS loop per OP 4D Draining the Reactor Cavity and Reactor Coolant System

Reactor Vessel Level Comparison Table

Description	Elevation	LI-447/LI-447A RV Lvl Ind	LI-447B or Tygon
NIS Top Hats	41' 3"	96.1%	96 1/8"
Incore Seal Table	41' 2"	95.1%	95 1/8"
Steam Generator Tubesheet Bottom	41' 1 1/2"	greater than 94.6%	94 5/8"
Reactor Vessel Flange	40' 8"	89.1%	89 1/8"
RCP Volute Flange	38' 3"	60.1%	60 1/8"
Steam Generator Channel Head	36' 2 1/2"	35.6%	35 5/8"
Reactor Vessel Th Nozzle Top	35' 7 3/8"	29.0%	29"
Reactor Vessel Th Nozzle 3/4	35' 5/8"	22.0%	22"
Reactor Vessel Th Nozzle Centerline	34' 5 3/8"	14.5%	14 1/2"
Reactor Vessel Th nozzle Bottom	33' 2 7/8"	0%	0"

Basis – The wording "The 6 inch level of the RCS Loop was chosen because at this level remote RCS level indication may be lost and loss of suction to decay heat removal systems has occurred. This condition will result in a minimum classification of Alert. The 6 inch level is above the CS2 setpoint of 0, the level equal to the bottom of the Reactor Vessel loop penetration" was added as justification of the 6% level indication and does not alter the meaning or the intent of the EAL.

Difference	▪ Generic difference # 8 for "LESS THAN" and # 12 for "Reactor Vessel" apply. ▪ These changes are not a deviation because they do not alter the meaning or intent, such that classification of the event could be different between the NEI guidance and the plant EAL
Deviation	None

NEI IC#	NEI IC Wording	PBNP IC#(s)	PBNP IC Wording
CA2	Loss of RPV Inventory with Irradiated Fuel in the Reactor Vessel	CA2	Loss of Reactor Vessel Inventory with Irradiated Fuel in the Reactor Vessel
Mode App.	Refueling		6-Refueling
Site Specific Justifications	None		
Difference	• Generic difference # 12 for "Reactor Vessel" applies. • This change is not a deviation because it does not alter the meaning or intent, such that classification of the event could be different between the NEI guidance and the plant EAL		
Deviation	None		

NEI EAL#	NEI EAL Wording	PBNP EAL#(s)	PBNP EAL Wording
2	a. Loss of RPV inventory as indicated by unexplained {site-specific} sump and tank level increase **AND** b. RPV level cannot be monitored for > 15 minutes	CA2.2	Loss of Reactor Vessel inventory as indicated by unexplained Containment Sump A or Waste Hold Up Tank level rise **AND** Reactor Vessel level cannot be monitored for GREATER THAN 15 minutes.
Site Specific Justifications	*EAL* - "Containment Sump A" or Waste Hold Up Tank " " are the site specific indications for loss of reactor vessel level inventory. Operators would need to determine that Reactor Vessel inventory loss was occurring by observing Containment Sump A or Waste Holdup Tank level changes [Ref. 1, 2]. Sump and tank level rises must be evaluated against other potential sources of leakage such as cooling water sources inside the containment to ensure they are indicative of RCS leakage. *Basis* – None		
Difference	▪ Generic differences # 1 for "rise", # 6 for "GREATER THAN", and # 12 for "Reactor Vessel" apply. ▪ "or" was used instead of "and" because indications of RCS Inventory loss may be evident in either case thus requiring classification of the event. Maintaining "and" in this situation would not allow for classification unless indication were present in both instances. ▪ These changes are not a deviation because they do not alter the meaning or intent, such that classification of the event could be different between the NEI guidance and the plant EAL		
Deviation	None		

NEI IC#	NEI IC Wording	PBNP IC#(s)	PBNP IC Wording
CA3	Loss of All Offsite Power and Loss of All Onsite AC Power to Essential Busses	CA3	Loss of All Offsite Power and Loss of All Onsite AC Power to Essential Busses
Mode App.	Cold Shutdown, Refueling, Defueled		5-Cold Shutdown, 6-Refueling, Defueled
Site Specific Justifications	None		
Difference	None		
Deviation	None		

NEI EAL#	NEI EAL Wording	PBNP EAL#(s)	PBNP EAL Wording
1	a. Loss of power to (site-specific) transformers. **AND** b. Failure of (site-specific) emergency generators to supply power to emergency busses. **AND** c. Failure to restore power to at least one emergency bus within 15 minutes from the time of loss of both offsite and onsite AC power.	CA3.1	Loss of all offsite power to both safety-related 4160 VAC buses 1(2)-A05 and 1(2)-A06 **AND** Failure of all emergency generators to supply power to emergency busses **AND** Failure to restore power to at least one emergency bus within 15 minutes from the time of loss of both offsite and onsite AC power.
Site Specific Justifications	*EAL* - "all offsite power to both safety-related 4160 VAC buses 1(2)-A05 and 1(2)-A06" – Describes the site specific indication for loss of offsite and onsite power. The 4160 VAC system includes two safety-related (essential) buses per unit, 1(2)-A05 (A train) and 1(2)-A06 (B train). Offsite power from the 345 KVAC system is stepped down through the 13.8 KVAC system to the Low Voltage Station Auxiliary Transformer (LVSAT) 1(2)-X04. The LVSATs provide power to 4160 VAC switching buses 1(2)-A03 and 1(2)-A04, which in turn provide power to safety-related buses 1(2)-A05 and 1(2)-A06. Ref. FSAR Section 8, Electrical Systems *Basis* - None		
Difference	▪ The NEI example EAL condition "Loss of power to (site-specific) transformers for greater than 15 minutes" has been changed to "Loss of offsite power to both safety-related...buses...for GREATER THAN 15 min." The PBNP wording focuses the classification on the loss of offsite power capability rather than the status of one or more transformers that may or may not be capable of powering the essential buses. Due to the nature of the off site power sources through two onsite transformers, it would be possible to maintain power to the transformers and lose power to the buses which would result in loss of offsite power, yet, under the NEI wording and event would not be classified as long as there was power to the transformers. In order to ensure a classification is made in accordance with the NEI Basis, loss of power to the busses was used in the EAL wording ▪ This change is not a deviation because it does not alter the meaning or intent, such that classification of the event could be different between the NEI guidance and the plant EAL		
Deviation	None		

NEI IC#	NEI IC Wording	PBNP IC#(s)	PBNP IC Wording
CA4	Inability to Maintain Plant in Cold Shutdown with Irradiated Fuel in the RPV	CA4	Inability to Maintain Plant in Cold Shutdown with Irradiated Fuel in the Reactor Vessel
Mode App.	Cold Shutdown, Refueling		5-Cold Shutdown, 6-Refueling
Site Specific Justifications	None		
Difference	• Generic difference # 12 for "Reactor Vessel" applies. • This change is not a deviation because it does not alter the meaning or intent, such that classification of the event could be different between the NEI guidance and the plant EAL		
Deviation	None		

NEI EAL#	NEI EAL Wording	PBNP EAL#(s)	PBNP EAL Wording
1	With CONTAINMENT CLOSURE <u>and</u> RCS integrity <u>not</u> established an UNPLANNED event results in RCS temperature exceeding the Technical Specification cold shutdown temperature limit.	CA4.1	With CONTAINMENT CLOSURE <u>and</u> RCS integrity <u>not</u> established, an UNPLANNED event results in RCS temperature exceeding 200 degrees F
Site Specific Justifications	*EAL* - 200°F - represents the Technical Specification cold shutdown temperature limit (Ref. TS Table 1-1) *Basis* - None		
Difference	None		
Deviation	None		

NEI IC#	NEI IC Wording	PBNP IC#(s)	PBNP IC Wording
CA4	Inability to Maintain Plant in Cold Shutdown with Irradiated Fuel in the RPV	CA4	Inability to Maintain Plant in Cold Shutdown with Irradiated Fuel in the Reactor Vessel
Mode App.	Cold Shutdown, Refueling		5-Cold Shutdown, 6-Refueling
Site Specific Justifications	None		
Difference	• Generic difference # 12 for Reactor Vessel" applies. • This change is not a deviation because it does not alter the meaning or intent, such that classification of the event could be different between the NEI guidance and the plant EAL		
Deviation	None		

NEI EAL#	NEI EAL Wording	PBNP EAL#(s)	PBNP EAL Wording
2	With CONTAINMENT CLOSURE established <u>and</u> RCS integrity <u>not</u> established <u>or</u> RCS inventory reduced an UNPLANNED event results in RCS temperature exceeding the Technical Specification cold shutdown temperature limit for greater than 20 minutes[1].	CA4.2	With CONTAINMENT CLOSURE established <u>and</u> RCS integrity <u>not</u> established <u>or</u> RCS inventory reduced an UNPLANNED event results in RCS temperature exceeding 200 degrees F for GREATER THAN 20 minutes[1]
Site Specific Justifications	*EAL* - 200°F is the Technical Specification cold shutdown value (Ref. TS Table 1-1) *Basis* - None		
Difference	• Generic difference # 6 for "GREATER THAN" applies. • This change is not a deviation because it does not alter the meaning or intent, such that classification of the event could be different between the NEI guidance and the plant EAL		
Deviation	None		

NEI IC#	NEI IC Wording	PBNP IC#(s)	PBNP IC Wording
CA4	Inability to Maintain Plant in Cold Shutdown with Irradiated Fuel in the RPV	CA4	Inability to Maintain Plant in Cold Shutdown with Irradiated Fuel in the Reactor Vessel
Mode App.	Cold Shutdown, Refueling		5-Cold Shutdown, 6-Refueling
Site Specific Justifications	None		
Difference	• Generic difference # 12 for "Reactor Vessel" applies. • This change is not a deviation because it does not alter the meaning or intent, such that classification of the event could be different between the NEI guidance and the plant EAL		
Deviation	None		

NEI EAL#	NEI EAL Wording	PBNP EAL#(s)	PBNP EAL Wording
3	An UNPLANNED event results in RCS temperature exceeding the Technical Specification cold shutdown temperature limit for greater than 60 minutes[1] or results in an RCS pressure increase of greater than {site-specific} psig.	CA4.3	An UNPLANNED event results in RCS temperature exceeding 200 degrees F for GREATER THAN 60 minutes[2] <u>or</u> results in an RCS pressure rise of GREATER THAN 10 psig.
Site Specific Justifications	*EAL* - ▪ 200° is the Technical Specification cold shutdown temp limit (Ref. TS Table 1-1) ▪ 10 psig – is the site specific Technical Specification limit and is the lowest limit that can be measured on installed instrumentation. (Ref. DBD-09, Reactor Coolant System) *Basis* – The following wording was added to the basis section: ▪ Pressure indicators PT-420 (RCS loop pressure) and PT-493 (pressurizer pressure) have a range of 0 to 1000 psig and are capable of measuring pressure to less than 10 psig [Ref. 6]. ▪ EAL CA4.3 does not apply when Pressurizer is solid. Minor temperature changes during solid plant operations will cause dramatic pressure swings. The described conditions, "RCS integrity not established" sets the "Pressurizer not solid" initial condition for this EAL, therefore this EAL does not apply when Pressurizer is solid. The first item is the justification for selection of the 10 psig limit selected in accordance with the NEI Basis Document reference. The second paragraph was added as clarification to operators that this EAL does not apply during PLANNED evolutions. These additions do not alter the meaning or the intent of the EAL		
Difference	▪ Generic differences # 1 for "rise", # 6 for "GREATER THAN", and # 9 for "or" apply.		

[1]Note: if an RCS heat removal system is in operation within this time frame and RCS temperature is being reduced then this EAL is not applicable.

[2]Note: if an RCS heat removal system is in operation within this time frame and RCS temperature is being reduced then this EAL is not applicable.

	▪ These changes are not a deviation because they do not alter the meaning or intent, such that classification of the event could be different between the NEI guidance and the plant EAL
Deviation	None

NEI IC#	NEI IC Wording	PBNP IC#(s)	PBNP IC Wording
CS1	Loss of RPV Inventory Affecting Core Decay Heat Removal Capability	CS1	Loss of Reactor Vessel Inventory Affecting Core Decay Heat Removal Capability
Mode App.	Cold Shutdown		5-Cold Shutdown
Site Specific Justifications	None		
Difference	• Generic difference # 12 for "Reactor Vessel" applies. • This change is not a deviation because it does not alter the meaning or intent, such that classification of the event could be different between the NEI guidance and the plant EAL		
Deviation	None		

NEI EAL#	NEI EAL Wording	PBNP EAL#(s)	PBNP EAL Wording
1	With CONTAINMENT CLOSURE <u>not</u> established: a. RPV inventory as indicated by RPV level less than {site-specific level} (6" below the low-low ECCS actuation setpoint) (BWR) (6" below the bottom ID of the RCS loop) (PWR) <u>OR</u> b. RPV level cannot be monitored for > 30 minutes with a loss of RPV inventory as indicated by unexplained {site-specific} sump and tank level increase	CS1.1	With CONTAINMENT CLOSURE <u>not</u> established: a. Reactor Vessel inventory as indicated by Reactor Vessel level 0% indication on LI-447/LI-447A **OR** b. Reactor Vessel level cannot be monitored for GREATER THAN 30 minutes with a loss of Reactor Vessel inventory as indicated by unexplained Containment Sump A <u>or</u> Waste Hold Up Tank level rise
Site Specific Justifications	*EAL* - ▪ "Containment Sump A" <u>or</u> Waste Hold Up Tank" are the site specific indications for loss of reactor vessel level inventory. Operators would need to determine that Reactor Vessel inventory loss was occurring by observing Containment Sump A and Waste Holdup Tank level changes [Ref. 1, 2]. Sump and tank level rises must be evaluated against other potential sources of leakage such as cooling water sources inside the containment to ensure they are indicative of RCS ▪ "0% indication on LI-447/LI-447A" – These values are expressed as they appear in the EOPs (Ref. OP 4D Part 1) *Basis* – The following wording was added to the basis section as clarification for classification when indication is not available in accordance with NEI guidance. "During preparations for refueling, reactor vessel level indication may not be available. In this instance, classification would be completed under CS1.2 for sump or tank level indications." The wording "The level associated with or without CONTAINMENT CLOSURE corresponds to the bottom inside diameter of the RCS loop." Was added as a justification for the level indication		

	selected and does not alter the meaning or intent of the EAL.
Difference	▪ Generic differences # 6 for "GREATER THAN" applies. ▪ "or" was used instead of "and" because indications of RCS Inventory loss may be evident in either case thus requiring classification of the event. Maintaining "and" in this situation would not allow for classification unless indication were present in both instances.
Deviation	0% indicated on LI-447/LI-447A-. These values are expressed as they appear in the EOPs. (Ref. OP 4D Part 1) There is no site indication available that reads 6" below the bottom ID of the RCS loop, therefore classification would have to be made upon indication of 0% on LI-447/LI-447A, which is earlier than if classification were made when RCS is 6" below the bottom of the loop. This criteria was selected in accordance with the direction provided in the NEI Basis Document which states that the lowest indication should be used and if such a set point cannot be determined, classification should be made under the second EAL statement.

NEI IC#	NEI IC Wording	PBNP IC#(s)	PBNP IC Wording
CS1	Loss of RPV Inventory Affecting Core Decay Heat Removal Capability	CS1	Loss of Reactor Vessel Inventory Affecting Core Decay Heat Removal Capability
Mode App.	Cold Shutdown		5-Cold Shutdown
Site Specific Justifications	None		
Difference	• Generic difference # 12 for "Reactor Vessel" applies. • This change is not a deviation because it does not alter the meaning or intent, such that classification of the event could be different between the NEI guidance and the plant EAL		
Deviation	None		

NEI EAL#	NEI EAL Wording	PBNP EAL#(s)	PBNP EAL Wording
2	With CONTAINMENT CLOSURE established a. RPV inventory as indicated by RPV level less than TOAF **OR** b. RPV level cannot be monitored for > 30 minutes with a loss of RPV inventory as indicated by either: • Unexplained {site-specific} sump and tank level increase • Erratic Source Range Monitor Indication	CS1.2	With CONTAINMENT CLOSURE established, Reactor Vessel level inventory as indicated by Reactor Vessel level 0% indication on LI-447 /LI-447A **OR** Reactor Vessel level cannot be monitored for GREATER THAN 30 minutes with a loss of Reactor Vessel inventory as indicated by either ▪ Unexplained Containment Sump A <u>or</u> Waste Hold Up Tank level rise ▪ Erratic Source Range Monitor Indication
Site Specific Justifications	*EAL* - ▪ "0% indication on LI-447/LI-447A" – These values are expressed as they appear in the EOPs (Ref. OP 4D Part 1) ▪ "Containment Sump A" <u>or</u> Waste Hold Up Tank" are the site specific indications for loss of reactor vessel level inventory. Operators would need to determine that Reactor Vessel inventory loss was occurring by observing Containment Sump A or Waste Holdup Tank level changes [Ref. 1, 2]. Sump and tank level rises must be evaluated against other potential sources of leakage such as cooling water sources inside the containment to ensure they are indicative of RCS leakage. *Basis* – The following wording was added to the basis section as justification for the indication selected and do not alter the meaning or intent of the EAL. ▪ The level associated with or without CONTAINMENT CLOSURE corresponds to the bottom inside diameter of the RCS loop. The level associated with containment closure established corresponds to the top of active fuel ▪ In Refueling mode, normal RCS level indication (e.g., RVLIS) may be unavailable but alternate means of level indication are normally available to assure that the ability to monitor level will not be interrupted. If all means of level monitoring are not available, however, the Reactor Vessel inventory loss may be detected by the following indirect methods		

	▪ As water level in the Reactor Vessel lowers, the dose rate above the core will rise. The dose rate due to this core shine should result in Containment High Range Monitor indication and possible alarm. Typical readings at full power are 1.0 to 2.5 R/hr. The Containment High Radiation indicators (1(2)RM126, 127 and 128) are log scaled with a span of $1\text{-}10^8$ R/hr. The 10 R/hr reading has been selected to be well above that expected under normal plant conditions [Ref. 1]. ▪ Post-TMI studies indicated that the installed nuclear instrumentation will operate erratically when the core is uncovered and Source Range Monitors (NIS N-31 and N-32) can be used as a tool for making such determinations.
Difference	▪ Generic differences # 6 for "GREATER THAN" and # 12 for "Reactor Vessel" apply. ▪ "<u>or</u>" was used instead of "and" because indications of RCS Inventory loss may be evident in either case thus requiring classification of the event. Maintaining "and" in this situation would not allow for classification unless indication were present in both instances
Deviation	0% indicated on LI-447/LI-447A-. These values are expressed as they appear in the EOPs (Ref. OP 4D Part 1) There is no site indication available that reads TOAF, therefore classification would have to be made upon indication of 0% on LI-447/LI-447A, which is earlier than if classification were made when RCS is at TOAF. This criteria was selected in accordance with the direction provided in the NEI Basis Document which states that the lowest indication should be used and if such a set point cannot be determined, classification should be made under the second EAL statement.

NEI IC#	NEI IC Wording	PBNP IC#(s)	PBNP IC Wording
CS2	Loss of RPV Inventory Affecting Core Decay Heat Removal Capability with Irradiated Fuel in the RPV	CS2	Loss of Reactor Vessel Inventory Affecting Core Decay Heat Removal Capability with Irradiated Fuel in the Reactor Vessel
Mode App.	Refueling		6-Refueling
Site Specific Justifications	None		
Difference	• Generic difference # 12 for "Reactor Vessel" applies. • This change is not a deviation because it does not alter the meaning or intent, such that classification of the event could be different between the NEI guidance and the plant EAL		
Deviation	None		

NEI EAL#	NEI EAL Wording	PBNP EAL#(s)	PBNP EAL Wording
1	With CONTAINMENT CLOSURE <u>not</u> established: a. RPV inventory as indicated by RPV level less than {site-specific level} (6" below the low-low ECCS actuation setpoint) (BWR) (6" below the bottom ID of the RCS loop) (PWR) **<u>OR</u>** b. RPV level cannot be monitored with Indication of core uncovery as evidenced by one or more of the following: • Containment High Range Radiation Monitor reading > {site-specific} setpoint • Erratic Source Range Monitor Indication Other {site-specific} indications	CS2.1	With CONTAINMENT CLOSURE <u>not</u> established: a. Reactor Vessel inventory as indicated by Reactor Vessel level 0% indicated on LI-447/LI-447A **OR** b. Reactor Vessel level cannot be monitored with indication of core uncovery as evidenced by any of the following: • Containment High Range Radiation Monitor reading GREATER THAN 10 R/hr • Erratic Source Range Monitor Indication
Site Specific Justifications	*EAL* - • 10 R/hr – as water level in the Reactor Vessel lowers, the dose rate above the core will rise. The dose rate due to this core shine should result in Containment High Range Monitor indication and possible alarm. Typical readings at full power are 1.0 to 2.5 R/hr. The Containment High Radiation indicators (1(2)RM126, 127 and 128) are log scaled with a span of $1\text{-}10^8$ R/hr. The 10 R/hr reading has been selected to be well above that expected under normal plant conditions. (Ref. WEP-SPT-25) • "0% indication on LI-447/LI-447A" – These values are expressed as they appear in the EOPs (Ref. OP 4D Part 1) *Basis* - The following wording was added to the basis section as justification for the indication and		

	radiation monitor readings selected and do not alter the meaning or intent of the EAL. ▪ The level associated with or without CONTAINMENT CLOSURE corresponds to the bottom inside diameter of the RCS loop. The level associated with containment closure established corresponds to the top of active fuel ▪ In Refueling mode, normal RCS level indication (e.g., RVLIS) may be unavailable but alternate means of level indication are normally available to assure that the ability to monitor level will not be interrupted. If all means of level monitoring are not available, however, the Reactor Vessel inventory loss may be detected by the following indirect methods ▪ As water level in the Reactor Vessel lowers, the dose rate above the core will rise. The dose rate due to this core shine should result in Containment High Range Monitor indication and possible alarm. Typical readings at full power are 1.0 to 2.5 R/hr. The Containment High Radiation indicators (1(2)RM126, 127 and 128) are log scaled with a span of $1\text{-}10^8$ R/hr. The 10 R/hr reading has been selected to be well above that expected under normal plant conditions [Ref. 1]. ▪ Post-TMI studies indicated that the installed nuclear instrumentation will operate erratically when the core is uncovered and Source Range Monitors (NIS N-31 and N-32) can be used as a tool for making such determinations
Difference	Generic difference # 4 for "any" and # 6 for "GREATER THAN" apply.
Deviation	0% indicated on LI-447/LI-447A-. These values are expressed as they appear in the EOPs. (Ref. OP 4D Part 1) There is no site indication available that reads 6" below the bottom ID of the RCS loop, therefore classification would have to be made upon indication of 0% on LI-447/LI-447A, which is earlier than if classification were made when RCS is 6" below the bottom of the loop. This criteria was selected in accordance with the direction provided in the NEI Basis Document which states that the lowest indication should be used and if such a set point cannot be determined, classification should be made under second EAL statement.

NEI IC#	NEI IC Wording	PBNP IC#(s)	PBNP IC Wording
CS2	Loss of RPV Inventory Affecting Core Decay Heat Removal Capability with Irradiated Fuel in the RPV	CS2	Loss of Reactor Vessel Inventory Affecting Core Decay Heat Removal Capability with Irradiated Fuel in the Reactor Vessel
Mode App.	Refueling		6-Refueling
Site Specific Justifications	None		
Difference	• Generic difference # 12 for "Reactor Vessel" applies. • This change is not a deviation because it does not alter the meaning or intent, such that classification of the event could be different between the NEI guidance and the plant EAL		
Deviation	None		

NEI EAL#	NEI EAL Wording	PBNP EAL#(s)	PBNP EAL Wording
1	With CONTAINMENT CLOSURE established: a. RPV inventory as indicated by RPV level less than {site-specific level} (6" below the low-low ECCS actuation setpoint) (BWR) (6" below the bottom ID of the RCS loop) (PWR) **OR** b. RPV level cannot be monitored with Indication of core uncovery as evidenced by one or more of the following: • Containment High Range Radiation Monitor reading > {site-specific} setpoint • Erratic Source Range Monitor Indication Other {site-specific} indications	CS2.2	With CONTAINMENT CLOSURE established, a. Reactor Vessel inventory as indicated by Reactor Vessel level 0% indicated on LI-447/LI-447A **OR** b. Reactor Vessel level cannot be monitored with indication of core uncovery as evidenced by any of the following: • Containment High Range Radiation Monitor reading GREATER THAN 10 R/hr • Erratic Source Range Monitor Indication
Site Specific Justifications	*EAL* - • "0% indication on LI-447/LI-447A" – These values are expressed as they appear in the EOPs. (Ref. OP 4D Part 1) • 10 R/hr - as water level in the Reactor Vessel lowers, the dose rate above the core will rise. The dose rate due to this core shine should result in Containment High Range Monitor indication and possible alarm. Typical readings at full power are 1.0 to 2.5 R/hr. The Containment High Radiation indicators (1(2)RM126, 127 and 128) are log scaled with a span of $1\text{-}10^{8}$ R/hr. The 10 R/hr reading has been selected to be well above that expected under normal plant conditions. (Ref. WEP-SPT-25) *Basis* - None		

Difference	Generic difference # 4 for "any" and # 6 for "GREATER THAN" apply.
Deviation	0% indicated on LI-447/LI-447A -. These values are expressed as they appear in the EOPs. (Ref. OP 4D Part 1). There is no site indication available that reads 6" below the bottom ID of the RCS loop, therefore classification would have to be made upon indication of 0% on LI-447/LI-447A, which is earlier than if classification were made when RCS is 6" below the bottom of the loop. This criteria was selected in accordance with the direction provided in the NEI Basis Document which states that the lowest indication should be used and if such a set point cannot be determined, classification should be made under the second EAL statement.

NEI IC#	NEI IC Wording	PBNP IC#(s)	PBNP IC Wording
CG1	Loss of RPV Inventory Affecting Fuel Clad Integrity with Containment Challenged with Irradiated Fuel in the RPV	CG1	Loss of Reactor Vessel Inventory Affecting Fuel Clad Integrity with Containment Challenged and Irradiated Fuel in the Reactor Vessel
Mode App.	Cold Shutdown, Refueling		5-Cold Shutdown, 6-Refueling
Site Specific Justifications	None		
Difference	• Generic difference # 12 for "Reactor Vessel" applies. • This change is not a deviation because it does not alter the meaning or intent, such that classification of the event could be different between the NEI guidance and the plant EAL		
Deviation	None		

NEI EAL#	NEI EAL Wording	PBNP EAL#(s)	PBNP EAL Wording
1	(1 and 2 and 3) 1. Loss of RPV inventory as indicated by unexplained {site-specific} sump and tank level increase 2. RPV Le vel: a. less than TOAF for > 30 minutes **OR** b. cannot be monitored with Indication of core uncovery for > 30 minutes as evidenced by one or more of the following: • Containment High Range Radiation Monitor reading > {site-specific} setpoint • Erratic Source Range Monitor Indication • Other {site-specific} indications 3. {Site-specific} indication of CONTAINMENT challenged as indicated by one or more of the following: • Explosive mixture inside containment • Pressure above {site-specific} value • CONTAINMENT CLOSURE <u>not</u> established	CG1.1	Reactor Vessel level 1. Loss of Reactor Vessel inventory as indicated by unexplained Containment Sump A <u>or</u> Waste Hold Up Tank level rise <u>or</u> any other indication of loss of Reactor Vessel inventory **AND** 2. Reactor Vessel level: a. LESS THAN [30 ft] 27 ft (RVLIS NR) <u>or</u> 0% indicated on LI-447/LI-447A for GREATER THAN 30 minutes **OR** b. cannot be monitored with indication of core uncovery for GREATER THAN 30 minutes as evidenced by any of the following • Containment High Range Radiation Monitor reading GREATER THAN 10 R/hr • Erratic Source Range Monitor indication **AND** 3. CONTAINMENT challenged as indicated by any of the following: • GREATER THAN OR EQUAL TO 6% Hydrogen concentration in containment • Containment pressure above 60 psig

	radiation monitors above {site-specific} value (BWR only)		established
Site Specific Justifications	*EAL* - ▪ [30 ft] 27 ft (RVLIS NR) - The use of alternate level values under adverse containment conditions is explained in 2nd paragraph of the EAL basis. This is not a difference from NEI; it is simply the site-specific level. These values are expressed as they appear in the EOPs (Ref Calculation WEP-SPT-25) ▪ 10 R/hr - as water level in the Reactor Vessel lowers, the dose rate above the core will rise. The dose rate due to this core shine should result in Containment High Range Monitor indication and possible alarm. Typical readings at full power are 1.0 to 2.5 R/hr. The Containment High Radiation indicators (1(2)RM126, 127 and 128) are log scaled with a span of $1\text{-}10^8$ R/hr. The 10 R/hr reading has been selected to be well above that expected under normal plant conditions. (Ref. WEP-SPT-25) ▪ Containment pressure above 60 psig - (Ref. CSP-ST.0, Critical Safety Function Status Trees ▪ Hydrogen concentration in containment GREATER THAN OR EQUAL TO 6% - describes the deflagration limit for an explosive hydrogen limit (Ref.CSP-C.1, BG-CSP-Z.1) *Basis* – The following justification was added to the basis document for selection of wording in the EAL. ▪ In the cold shutdown mode, normal RCS level and Reactor Vessel level instrumentation systems will normally be available. In the refueling mode, normal means of Reactor Vessel level indication may not be available. Redundant means of Reactor Vessel level indication will be normally available (including the ability to monitor level visually) to assure that the ability to monitor level will not be interrupted. However, if all level indication were to be lost during a loss of RCS inventory event, the operators would need to determine that Reactor Vessel inventory loss was occurring by observing sump and tank level changes. Sump and tank level rises must be evaluated against other potential sources of leakage such as cooling water sources inside the containment to ensure they are indicative of RCS leakage. ▪ As water level in the Reactor Vessel lowers, the dose rate above the core will rise. The dose rate due to this core shine should result in Containment High Range Monitor indication and possible alarm. Typical readings at full power are 1.0 to 2.5 R/hr. The Containment High Radiation indicators (1(2)RM126, 127 and 128) are log scaled with a span of $1\text{-}10^8$ R/hr. The 10 R/hr reading has been selected to be well above that expected under normal plant conditions [Ref. 1] ▪ Post-TMI studies indicated that the installed nuclear instrumentation will operate erratically when the core is uncovered and Source Range Monitors (NIS N-31 and N-32) can be used as a tool for making such determinations		
Difference	▪ Generic differences # 6 for "GREATER THAN", # 8 for "LESS THAN", # 11 for "AND", and # 12 for "Reactor Vessel" apply. ▪ Removed "Indication of" from # 3 to eliminate repetitive wording. ▪ "Containment Sump A" <u>or</u> Waste Hold Up Tank " are the site specific indications for loss of reactor vessel level inventory In this case, "or" was used instead of "and" because indications of RCS Inventory loss may be evident in either case thus requiring classification of the event. Maintaining "and" in this situation would not allow for classification unless indication were present in both instances ▪ "<u>or</u> any other indication of loss of Reactor Vessel inventory" – In the cold shutdown mode, normal RCS level and Reactor Vessel level instrumentation systems will normally be available. In the refueling mode, normal means of Reactor Vessel level indication may not be available. Redundant means of Reactor Vessel level indication will be normally available (including the ability to monitor level visually) to assure that the ability to monitor level will not be interrupted		
Deviation	None		

EVENTS RELATED TO ISFSI MALFUNCTION

Site Specific
Information/Differences/Deviations
Justifications

NEI IC#	NEI IC Wording	PBNP IC#(s)	PBNP IC Wording
E-HU1	Damage to loaded cask CONFINEMENT BOUNDARY	EU1	Damage to loaded cask CONFINEMENT BOUNDARY
Mode App.	Not Applicable		Not Applicable
Site Specific Justifications	None		
Difference	None		
Deviation	None		

NEI EAL#	NEI EAL Wording	PBNP EAL#(s)	PBNP EAL Wording
1	Natural phenomena events affecting a loaded cask CONFINEMENT BOUNDARY	EU1.1	Any one of the following natural phenomena events with resultant visible damage to or loss of a loaded cask CONFINEMENT BOUNDARY Report of plant personnel of a: Tornado strike Earthquake Flood Lightning strike
Site Specific Justifications	*EAL* - ▪ "Any one of the following...report of plant personnel of a Tornado strike, Earthquake, Flood, Lightning strike.." – list the results of the ISFSI Safety Analysis Report (SAR) and the related NRC Safety Evaluation Report were used to develop the site-specific list of natural phenomena events and accident conditions (Ref. NUHOMES SAR) ▪ "with resultant visible damage to or loss of" – was added to define "affecting" *Basis*- The following wording was added to the basis section as justification for the references utilized and does not alter the meaning or intent of the EAL – "A UE in this IC is categorized on the basis of the occurrence of an event of sufficient magnitude that a loaded cask CONFINEMENT BOUNDARY is damaged or violated. [Ref. 1, 2]"		
Difference	None		
Deviation	None		

NEI IC#	NEI IC Wording	PBNP IC#(s)	PBNP IC Wording
E-HU1	Damage to loaded cask CONFINEMENT BOUNDARY	EU1	Damage to loaded cask CONFINEMENT BOUNDARY
Mode App.	Not Applicable		Not Applicable
Site Specific Justifications	None		
Difference	None		
Deviation	None		

NEI EAL#	NEI EAL Wording	PBNP EAL#(s)	PBNP EAL Wording
2	Accident conditions affecting a loaded cask CONFINEMENT BOUNDARY. (site-specific list)	EU1.2	Any of the following Accident conditions with resultant visible damage to or loss of a loaded cask CONFINEMENT BOUNDARY Vent Blockage Cask Drop Accidental Pressurization Air Vent and Outlet Shielding Reduction
Site Specific Justifications	*EAL* - ▪ "Any of the following...Vent Blockage, Cask Drop, Accidental Pressurization, Air Vent and Outlet Shielding Reduction.." - list the results of the ISFSI Safety Analysis Report (SAR) and the related NRC Safety Evaluation Report were used to develop the site-specific list of natural phenomena events and accident conditions (Ref. NUHOMES SAR) ▪ "with resultant visible damage to or loss of" – was added to define "affecting" *Basis* - The following wording was added to the basis section as justification for the references utilized and does not alter the meaning or intent of the EAL – "A UE in this IC is categorized on the basis of the occurrence of an event of sufficient magnitude that a loaded cask CONFINEMENT BOUNDARY is damaged or violated. [Ref. 1, 2]"		
Difference	None		
Deviation	None		

NEI IC#	NEI IC Wording	PBNP IC#(s)	PBNP IC Wording
E-HU1	Damage to a loaded cask CONFINEMENT BOUNDARY	EU1	Damage to a loaded cask CONFINEMENT BOUNDARY
Mode App.	Not Applicable		Not Applicable
Site Specific Justifications	None		
Difference	None		
Deviation	None		

NEI EAL#	NEI EAL Wording	PBNP EAL#(s)	PBNP EAL Wording
3	Any condition in the opinion of the Emergency Director that indicates loss of loaded fuel storage cask CONFINEMENT BOUNDARY	EU1.3	Any condition in the opinion of the Emergency Director that indicates loss of loaded fuel storage cask CONFINEMENT BOUNDARY
Site Specific Justifications	*EAL* – None *Basis* - None		
Difference	None		
Deviation	None		

NEI IC#	NEI IC Wording	PBNP IC#(s)	PBNP IC Wording
E-HU2	Confirmed Security Event with potential loss of level of safety of the ISFSI	EU2	Confirmed Security Event with potential loss of level of safety of the ISFSI
Mode App.	Not Applicable		Not Applicable
Site Specific Justifications	None		
Difference	None		
Deviation	None		

NEI EAL#	NEI EAL Wording	PBNP EAL#(s)	PBNP EAL Wording
1	Security Event as determined from (site-specific) Security Plan and reported by the (site-specific) security shift supervision	EU2.1	Security Event as determined from PBNP Physical Security Plan and reported by the Security Shift Supervision
Site Specific Justifications	*EAL* - Notification of a security concern from the Security Shift Supervision would be based on events as specified in the PBNP Physical Security Plan. It is the responsibility of the Security Shift Supervision to ensure that such reports are based on requirements of the Security Plan *Basis* - None		
Difference	▪ Notification of a security concern from the Security Shift Supervision would be based on events as specified in the PBNP Physical Seurity Plan. It is the responsibility of the Security Shift Supervision to ensure that such reports are based on requirements of the Security Plan. ▪ These changes are not a deviation because they do not alter the meaning or intent, such that classification of the event could be different between the NEI guidance and the plant EAL		
Deviation	None		

FISSION PRODUCT BARRIER DEGRADATION

Site Specific
Information/Differences/Deviations
Justifications

NEI IC#	NEI IC Wording	PBNP IC#(s)	PBNP IC Wording
FU1	ANY Loss or ANY Potential Loss of Containment	FU1	ANY Loss or ANY Potential Loss of Containment
Mode App.	Power Operation, Hot Standby, Startup, Hot Shutdown		1- Power Operation, 2-Startup, 3-Hot Standby, 4-Hot Shutdown
Site Specific Justifications	None		
Difference	None		
Deviation	None		

NEI EAL#	NEI EAL Wording	PBNP EAL#(s)	PBNP EAL Wording
1	ANY Loss or ANY Potential Loss of Containment	FU1.1	ANY Loss or ANY Potential Loss of Containment (Table F-1)
Site Specific Justifications	*EAL* - Table F-1: This table contains the loss and challenge thresholds for the three fission product barriers. Table F-1 is the plant representation of NEI Table 5-F-4 and contains the fission product barrier loss/challenge thresholds that are applicable to PBNP *Basis* - None		
Difference	▪ Table F-1: This table contains the loss and challenge thresholds for the three fission product barriers. Table F-1 is the plant representation of NEI Table 5-F-4 and contains the fission product barrier loss/challenge thresholds that are applicable to PBNP ▪ These changes are not a deviation because they do not alter the meaning or intent, such that classification of the event could be different between the NEI guidance and the plant EAL		
Deviation	None		

NEI IC#	NEI IC Wording	PBNP IC#(s)	PBNP IC Wording
FA1	ANY Loss or ANY Potential Loss of EITHER Fuel Clad OR RCS	FA1	ANY Loss or ANY Potential Loss of EITHER Fuel Cladding OR RCS
Mode App.	Power Operation, Hot Standby, Startup, Hot Shutdown		1- Power Operation, 2-Startup, 3-Hot Standby, 4-Hot Shutdown
Site Specific Justifications	None		
Difference	None		
Deviation	None		

NEI EAL#	NEI EAL Wording	PBNP EAL#(s)	PBNP EAL Wording
FA1	ANY Loss or ANY Potential Loss of EITHER Fuel Clad OR RCS	FA1.1	ANY loss or ANY Potential Loss of EITHER Fuel Cladding OR RCS (Table F-1)
Site Specific Justifications	*EAL* - Table F-1 is the plant representation of NEI Table 5-F-4 and contains the fission product barrier loss/challenge thresholds that are applicable to PBNP. *Basis* - None		
Difference	▪ Table F-1 is the plant representation of NEI Table 5-F-4 and contains the fission product barrier loss/challenge thresholds that are applicable to PBNP. ▪ These changes are not a deviation because they do not alter the meaning or intent, such that classification of the event could be different between the NEI guidance and the plant EAL		
Deviation	None		

NEI IC#	NEI IC Wording	PBNP IC#(s)	PBNP IC Wording
FS1	Loss or Potential Loss of ANY Two Barriers	FS1	Loss or Potential Loss of ANY Two Barriers
Mode App.	Power Operation, Hot Standby, Startup, Hot Shutdown		1- Power Operation, 2-Startup, 3-Hot Standby, 4-Hot Shutdown
Site Specific Justifications	None		
Difference	None		
Deviation	None		

NEI EAL#	NEI EAL Wording	PBNP EAL#(s)	PBNP EAL Wording
1	Loss or Potential Loss of ANY Two Barriers	FS1.1	Loss or Potential Loss of ANY Two Barriers (Table F-1)
Site Specific Justifications	*EAL* - Table F-1: This table contains the loss and challenge thresholds for the three fission product barriers. *Basis* - None		
Difference	▪ Table F-1 is the plant representation of NEI Table 5-F-4 and contains the fission product barrier loss/challenge thresholds that are applicable to PBNP. ▪ These changes are not a deviation because they do not alter the meaning or intent, such that classification of the event could be different between the NEI guidance and the plant EAL		
Deviation	None		

NEI IC#	NEI IC Wording	PBNP IC#(s)	PBNP IC Wording
FG1	Loss of ANY Two Barriers AND Loss or Potential Loss of Third Barrier	FG1	Loss of ANY Two Barriers AND Loss or Potential Loss of a Third Barrier
Mode App.	Power Operation, Hot Standby, Startup, Hot Shutdown		1- Power Operation, 2-Startup, 3-Hot Standby, 4-Hot Shutdown
Site Specific Justifications	None		
Difference	None		
Deviation	None		

NEI EAL#	NEI EAL Wording	PBNP EAL#(s)	PBNP EAL Wording
1	Loss of ANY Two Barriers AND Loss or Potential Loss of Third Barrier	FG1.1	Loss of ANY Two Barriers AND Loss or Potential Loss of a Third Barrier (Table F-1)
Site Specific Justifications	*EAL* – Table F-1: This table contains the loss and challenge thresholds for the three fission product barriers. *Basis* - None		
Difference	▪ Table F-1 is the plant representation of NEI Table 5-F-4 and contains the fission product barrier loss/challenge thresholds that are applicable to PBNP. ▪ These changes are not a deviation because they do not alter the meaning or intent, such that classification of the event could be different between the NEI guidance and the plant EAL		
Deviation	None		

NEI IC#	NEI IC Wording	PBNP IC#(s)	PBNP IC Wording
FC Loss 1	**Critical Safety Function Status** Core-Cooling Red	FC Loss 1	**Critical Safety Function Status** Conditions requiring entry into Core Cooling-RED path (CSP-C.1)
Mode App.	Power Operation, Hot Standby, Startup, Hot Shutdown		1- Power Operation, 2-Startup, 3-Hot Standby, 4-Hot Shutdown
Site Specific Justifications	*EAL* - Added words "Conditions requiring entry into... path (CSP-C.1)." Provides clarification that classification is based upon the condition defined in the CSFST. This is consistent with the NEI basis for the FPBs. Per NEI 99-01 Revision 4 section 3.9 (pg 3.11), it reasonably follows that if any CSF enters a RED path, the threshold for the fission product barrier loss/challenge exists *Basis* – Added the following as justification for site specific indications. These additions do not change the meaning or intent of the EAL. ▪ CSFST setpoints enclosed in brackets (e.g., [120 ft], etc.) are used under adverse containment conditions. Adverse containment conditions are defined as: • Containment pressure is equal to or greater than 10 psig. • Containment radiation is currently greater than or equal to 1E5 R/hr. • Integrated dose is greater than 1E6 R or unknown.		
Difference	▪ Added words "Conditions requiring entry into... path (CSP-C.1)." Provides clarification that classification is based upon the condition defined in the CSFST. This is consistent with the NEI basis for the FPBs. Per NEI 99-01 Revision 4 section 3.9 (pg 3.11), it reasonably follows that if any CSF enters a RED path, the threshold for the fission product barrier loss/challenge exists. ▪ This change is not a deviation because it does not alter the meaning or intent, such that classification of the event could be different between the NEI guidance and the plant EAL.		
Deviation	None		

NEI IC#	NEI IC Wording	PBNP IC#(s)	PBNP IC Wording
FC Loss 2	**Primary Coolant Activity Level** Coolant Activity GREATER THAN (site-specific) Value	FC Loss 2	**Primary Coolant Activity Level** Coolant Activity GREATER THAN 300 µCi/gm I-131 equivalent
Mode App.	Power Operation, Hot Standby, Startup, Hot Shutdown		1- Power Operation, 2-Startup, 3-Hot Standby, 4-Hot Shutdown
Site Specific Justifications	*EAL* - 300 µCi/gm I-131 equivalent: This value was taken from NEI 99-01 Rev. 4 basis for fuel clad barrier primary coolant activity (pg 5-F-14). *Basis* - None		
Difference	None		
Deviation	None		

NEI IC#	NEI IC Wording	PBNP IC#(s)	PBNP IC Wording
FC Loss 3	**Core Exit Thermocouple Readings** GREATER THAN (site-specific) degree F	FC Loss 3	**Core Exit Thermocouple Readings** GREATER THAN OR EQUAL TO 1200°F
Mode App.	Power Operation, Hot Standby, Startup, Hot Shutdown		1- Power Operation, 2-Startup, 3-Hot Standby, 4-Hot Shutdown
Site Specific Justifications	*EAL* - 1200°F: This temperature is given in CSP-ST.0 Unit 1(2) Critical Safety Function Status Trees, Figure 2. *Basis* - None		
Difference	None		
Deviation	The NEI phrase "greater than" has been changed to "GREATER THAN OR EQUAL TO" so that the EAL threshold agrees with the level specified in CSP-ST.0 Unit 1(2) Critical Safety Function Status Trees, Figure 2.		

NEI IC#	NEI IC Wording	PBNP IC#(s)	PBNP IC Wording
FC Loss 4	**Reactor Vessel Water Level** Not Applicable	FC Loss 4	**Reactor Vessel Water Level** Not applicable per NEI 99-01 Revision 4.
Mode App.	Power Operation, Hot Standby, Startup, Hot Shutdown		1- Power Operation, 2-Startup, 3-Hot Standby, 4-Hot Shutdown
Site Specific Justifications	None		
Difference	None		
Deviation	None		

NEI IC#	NEI IC Wording	PBNP IC#(s)	PBNP IC Wording
FC Loss 5	**Containment Radiation Monitoring** Containment rad monitor reading GREATER THAN (site-specific) R/hr	FC Loss 5	**Containment Radiation Monitoring** Containment rad monitor reading GREATER THAN 17 R/hr indicated on any of the following: ▪ 1(2) RM-126 ▪ 1(2) RM-127 ▪ 1(2) RM-128
Mode App.	Power Operation, Hot Standby, Startup, Hot Shutdown		1- Power Operation, 2-Startup, 3-Hot Standby, 4-Hot Shutdown
Site Specific Justifications	*EAL* - ▪ 17 R/hr is the site-specific containment rad monitor reading that has been calculated assuming the instantaneous release and dispersal of the reactor coolant noble gas and iodine inventory associated with a concentration of 300 μCi/gm dose equivalent I-131 into the containment atmosphere per Calc 2004-0006 ▪ 1(2) RM-126, 1(2) RM-127, 1(2) RM-128 - are the containment high range monitors utilized by operations for this EAL. *Basis* – The words "Monitors used for this fission product barrier loss threshold are the containment high-range area monitors: 1(2) RM-126, 1(2) RM-127, 1(2) RM-128" were added to the basis section as justification for their application to this EAL.		
Difference	None		
Deviation	None		

NEI IC#	NEI IC Wording	PBNP IC#(s)	PBNP IC Wording
FC Loss 6	**Other (Site-Specific) Indications** (Site-specific) as applicable	FC Loss 6	**Other (Site-Specific) Indications** Failed Fuel Monitor (RE-109) reading GREATER THAN OR EQUAL TO 4500 mR/hr
Mode App.	Power Operation, Hot Standby, Startup, Hot Shutdown		1- Power Operation, 2-Startup, 3-Hot Standby, 4-Hot Shutdown
Site Specific Justifications	*EAL* - Failed Fuel Monitor (RE-109) reading GREATER THAN OR EQUAL TO 4500 mrem/hr is a site-specific indication of fuel cladding loss which is allowed under this NEI IC. A Failed Fuel Monitor reading of greater than 4500 mR/hr indicates the release of reactor coolant, with elevated activity indicative of fuel damage. The reading is calculated assuming the instantaneous release and dispersal of the reactor coolant noble gas and iodine inventory associated with a concentration of 300 µCi/gm dose equivalent I-131 activity into the Primary System. Reactor coolant concentrations of this magnitude are several times larger than the maximum concentrations (including iodine spiking) allowed within Technical Specifications and are therefore indicative of fuel damage *Basis* – The wording "A Failed Fuel Monitor reading of greater than 4500 mR/hr indicates the release of reactor coolant, with elevated activity indicative of fuel damage. The reading is calculated assuming the instantaneous release and dispersal of the reactor coolant noble gas and iodine inventory associated with a concentration of 300 µCi/gm dose equivalent I-131 activity into the Primary System. Reactor coolant concentrations of this magnitude are several times larger than the maximum concentrations (including iodine spiking) allowed within Technical Specifications and are therefore indicative of fuel damage [Ref. 8]." Was added to the basis section as justification for the dose rate selected and does not alter the meaning or intent of this EAL.		
Difference	None		
Deviation	None		

NEI IC#	NEI IC Wording	PBNP IC#(s)	PBNP IC Wording
FC Loss 7	**Emergency Director Judgment** Any condition in the opinion of the Emergency Director that indicates Loss or Potential Loss of the Fuel Clad Barrier	FC Loss 7	**Emergency Director Judgment** Any condition in the opinion of the Emergency Director that indicates Loss or Potential Loss of the Fuel Clad Barrier
Mode App.	Power Operation, Hot Standby, Startup, Hot Shutdown		1- Power Operation, 2-Startup, 3-Hot Standby, 4-Hot Shutdown
Site Specific Justifications	*EAL* – None *Basis* - The additional bulleted items in the basis for Emergency Director judgment are an amalgam of bases information from NEI 99-01 revision 4. The first bulleted item comes from the notes on Table 5-F-1 as well as sections 3.9 and 3.10 of the NEI document regarding "imminent" barrier loss. The second bulleted item is from the bases of IC HG1, loss of all AC, regarding degraded barrier monitoring capability that appears appropriate here. The third bulleted item also comes from the IC HG2 as well as SG2 (ATWS) regarding the importance of the use of Emergency Director judgment to make anticipatory declarations based on FPB monitoring		
Difference	Additional information was added to support EAL determination. The additional information does not impact the classification or intent of the associated EAL(s).		
Deviation	None		

NEI IC#	NEI IC Wording	PBNP IC#(s)	PBNP IC Wording
FC P-Loss 1	**Critical Safety Function Status** Core Cooling-Orange OR Heat Sink-Red	FC P-Loss 1	**Critical Safety Function Status** Conditions requiring entry into Core Cooling-ORANGE path (CSP-C.2) **OR** Conditions requiring entry into Heat Sink-RED path (CSP-H.1)
Mode App.	Power Operation, Hot Standby, Startup, Hot Shutdown		1- Power Operation, 2-Startup, 3-Hot Standby, 4-Hot Shutdown
Site Specific Justifications	*EAL* - ▪ CSP-C.2 – the Critical Safety Procedure that provides directions to restore adequate core cooling. ▪ CSP-H.1 – the Critical Safety Procedure that provides directions to respond to a loss of secondary heat sink in both steam generators *Basis* – The following was added to the basis section as justification for the site specific references and does not alter the meaning or intent of the EAL. ▪ (Core Cooling – ORANGE or Heat Sink – RED) indicate potential loss of the Fuel Clad Barrier. CSP-H.1 is the Critical Safety Procedure that provides directions to respond to a loss of secondary heat sink in both steam generators. [Ref. 1, 3] ▪ CSP-C.2 is the Critical Safety Procedure that provides directions to restore adequate core cooling. [Ref. 1, 2] ▪ The barrier loss/potential loss occurs when the plant parameter associated with the CSFST path is reached (not when the operator reads the CSFST in the EOP network). The phrase "Conditions requiring entry into..." is included in these thresholds to emphasize this intent		
Difference	▪ Added words "Conditions requiring entry into... path (CSP-C.2)." Provides clarification that classification is based upon the condition defined in the CSFST. This is consistent with the NEI basis for the FPBs. Per NEI 99-01 Revision 4 section 3.9 (pg 3.11), it reasonably follows that if any CSF enters a RED or ORANGE path, the threshold for the fission product barrier loss/challenge exists. ▪ Generic difference # 9 for "**OR**" applies. ▪ These changes are not a deviation because they do not alter the meaning or intent, such that classification of the event could be different between the NEI guidance and the plant EAL.		
Deviation	None		

NEI IC#	NEI IC Wording	PBNP IC#(s)	PBNP IC Wording
FC P-Loss 2	**Primary Coolant Activity Level** Not Applicable	FC P-Loss 2	**Primary Coolant Activity Level** Not applicable per NEI 99-01 Revision 4.
Mode App.	Power Operation, Hot Standby, Startup, Hot Shutdown		1- Power Operation, 2-Startup, 3-Hot Standby, 4-Hot Shutdown
Site Specific Justifications	None		
Difference	None		
Deviation	None		

NEI IC#	NEI IC Wording	PBNP IC#(s)	PBNP IC Wording
FC P-Loss 3	**<u>Core Exit Thermocouple Readings</u>** GREATER THAN (site-specific) degree F	FC P-Loss 3	**<u>Core Exit Thermocouple Readings</u>** GREATER THAN OR EQUAL TO 700°F
Mode App.	Power Operation, Hot Standby, Startup, Hot Shutdown		1- Power Operation, 2-Startup, 3-Hot Standby, 4-Hot Shutdown
Site Specific Justifications	*EAL* - 700°F – this value corresponds to a loss of subcooling. (Ref. CSP-ST.0) *Basis* - None		
Difference	None		
Deviation	Used "GREATER THAN OR EQUAL TO" wording to be consistent with the CSFST definition of the PBNP Core Cooling-Orange path, which is entered if CET readings are equal to or greater than 700°F.		

NEI IC#	NEI IC Wording	PBNP IC#(s)	PBNP IC Wording
FC P-Loss 4	<u>**Core Exit Thermocouple Readings**</u> Level LESS than (site-specific) value	FC P-Loss 4	<u>**Core Exit Thermocouple Readings**</u> Level LESS THAN OR EQUAL TO ▪ 25 ft RVLIS NR (with no RCPs running) ▪ [100 ft] 90 ft RVLIS WR (with 1 RCP running) ▪ [120 ft] 110 ft RVLIS WR (with 2 RCPs running)
Mode App.	Power Operation, Hot Standby, Startup, Hot Shutdown		1- Power Operation, 2-Startup, 3-Hot Standby, 4-Hot Shutdown
Site Specific Justifications	*EAL* – ▪ RVLIS NR LESS THAN OR EQUAL TO 25 ft with no RCPs running: ▪ RVLIS narrow range equal to or less than 25 ft with no RCPs running corresponds to a collapsed liquid level 3.5 feet above the bottom of the active fuel with core exit temperature greater than 700°F, including allowance for normal channel accuracy. ▪ This water level is an indication of inadequate coolant inventory and is used in the Core Cooling-ORANGE path and indicates subcooling has been lost and that some fuel cladding damage may occur. ▪ Per CSP-ST.0 Unit 1(2) Critical Safety Function Status Trees, Figure 2, this level is only applicable when no RCPS are running. ▪ [100 ft] 90 ft RVLIS WR (with 1 RCP running) ▪ [120 ft] 110 ft RVLIS WR (with 2 RCPs running) *Basis* – The above information was added to the basis section as an operator aid for determining applicable levels based on the number of RCPs running per CSP-ST.0. This wording does not alter the meaning or intent of the EAL.		
Difference	None		
Deviation	The NEI phrase "less than" has been changed to "LESS THAN OR EQUAL TO" so that the EAL threshold agrees with the level specified in CSP-ST.0 Unit 1(2) Critical Safety Function Status Trees, Figure 2.		

NEI IC#	NEI IC Wording	PBNP IC#(s)	PBNP IC Wording
FC P-Loss 5	**Containment Radiation Monitoring** Not Applicable	FC P-Loss 5	**Containment Radiation Monitoring** Not applicable per NEI 99-01 Revision 4.
Mode App.	Power Operation, Hot Standby, Startup, Hot Shutdown		1- Power Operation, 2-Startup, 3-Hot Standby, 4-Hot Shutdown
Site Specific Justifications	None		
Difference	None		
Deviation	None		

NEI IC#	NEI IC Wording	PBNP IC#(s)	PBNP IC Wording
FC P-Loss 6	**Other (Site-Specific) Indications** (Site-specific) as applicable	FC P-Loss 6	**Other (Site-Specific) Indications** No other applicable site-specific indications of a fuel cladding potential loss exist.
Mode App.	Power Operation, Hot Standby, Startup, Hot Shutdown		1- Power Operation, 2-Startup, 3-Hot Standby, 4-Hot Shutdown
Site Specific Justifications	None		
Difference	None		
Deviation	None		

NEI IC#	NEI IC Wording	PBNP IC#(s)	PBNP IC Wording
FC P-Loss 7	**Emergency Director Judgment** Any condition in the opinion of the Emergency Director that indicates Loss or Potential Loss of the Fuel Clad Barrier	FC P-Loss 7	**Emergency Director Judgment** Any condition in the opinion of the Emergency Director that indicates Loss or Potential Loss of the Fuel Clad Barrier
Mode App.	Power Operation, Hot Standby, Startup, Hot Shutdown		1- Power Operation, 2-Startup, 3-Hot Standby, 4-Hot Shutdown
Site Specific Justifications	*EAL* – None *Basis* - The additional bulleted items in the basis for Emergency Director judgment are an amalgam of bases information from NEI 99-01 revision 4. The first bulleted item comes from the notes on Table 5-F-1 as well as sections 3.9 and 3.10 of the NEI document regarding "imminent" barrier loss. The second bulleted item is from the bases of IC HG1, loss of all AC, regarding degraded barrier monitoring capability that appears appropriate here. The third bulleted item also comes from the IC HG2 as well as SG2 (ATWS) regarding the importance of the use of Emergency Director judgment to make anticipatory declarations based on FPB monitoring		
Difference	Additional information was added to support EAL determination. The additional information does not impact the classification or intent of the associated EAL(s).		
Deviation	None		

NEI IC#	NEI IC Wording	PBNP IC#(s)	PBNP IC Wording
RCS Loss 1	**Critical Safety Function Status** Not Applicable	RCS Loss 1	**Critical Safety Function Status** Not applicable per NEI 99-01 Revision 4.
Mode App.	Power Operation, Hot Standby, Startup, Hot Shutdown		1- Power Operation, 2-Startup, 3-Hot Standby, 4-Hot Shutdown
Site Specific Justifications	None		
Difference	None		
Deviation	None		

NEI IC#	NEI IC Wording	PBNP IC#(s)	PBNP IC Wording
RCS Loss 2	**RCS Leak Rate** GREATER THAN available makeup capacity as indicated by a loss of RCS subcooling	RCS Loss 2	**RCS Leak Rate** GREATER THAN available makeup capacity as indicated by a loss of RCS subcooling (LESS THAN OR EQUAL TO [80°F] 35°F)
Mode App.	Power Operation, Hot Standby, Startup, Hot Shutdown		1- Power Operation, 2-Startup, 3-Hot Standby, 4-Hot Shutdown
Site Specific Justifications	*EAL* - Core exit thermocouples LESS THAN OR EQUAL TO [80°F] 35°F: The subcooling margin threshold is the level specified in CSP-ST.0 Unit 1(2) Critical Safety Function Status Trees, Figure 2. By definition, EOPs define this value as a loss of RCS subcooling. *Basis* - None		
Difference	▪ Generic difference # 8 for "LESS THAN OR EQUAL TO" applies. ▪ This change is not a deviation because it does not alter the meaning or intent, such that classification of the event could be different between the NEI guidance and the plant EAL		
Deviation	None		

NEI IC#	NEI IC Wording	PBNP IC#(s)	PBNP IC Wording
RCS Loss 3	**SG Tube Rupture** SGTR that results in an ECCS (SI) Actuation	RCS Loss 3	**SG Tube Rupture** SGTR that results in an ECCS (SI) Actuation
Mode App.	Power Operation, Hot Standby, Startup, Hot Shutdown		1- Power Operation, 2-Startup, 3-Hot Standby, 4-Hot Shutdown
Site Specific Justifications	*EAL* – None *Basis* – The wording "ECCS (SI) actuation is caused by: PZR Low Pressure (equal to or less than 1735 psig), Steam Line Low Pressure (equal to or less than 530 psig), Containment High Pressure (equal to or greater than 5 psig). 140 gpm is the design maximum capacity of all charging pumps." was added to the basis section as justification for ECCS (SI) actuation and does not alter the meaning or intent of the EAL.		
Difference	None		
Deviation	None		

NEI IC#	NEI IC Wording	PBNP IC#(s)	PBNP IC Wording
RCS Loss 4	**Containment Radiation Monitoring** Containment rad monitor reading GREATER THAN (site-specific) R/hr	RCS Loss 4	**Containment Radiation Monitoring** Containment rad monitor reading GREATER THAN 3.5 R/hr
Mode App.	Power Operation, Hot Standby, Startup, Hot Shutdown		1- Power Operation, 2-Startup, 3-Hot Standby, 4-Hot Shutdown
Site Specific Justifications	*EAL* - 3.5 R/hr is the average site-specific containment rad monitor reading that has been calculated assuming the instantaneous release and dispersal of the reactor coolant noble gas and iodine inventory associated with normal operating concentrations (i.e., within T/S) into the containment atmosphere. Calc 2004-0006. *Basis* - None		
Difference	None		
Deviation	None		

NEI IC#	NEI IC Wording	PBNP IC#(s)	PBNP IC Wording
RCS Loss 5	**Other (Site-Specific) Indications** (Site-specific) as applicable	RCS Loss 5	**Other (Site-Specific) Indications** N/A
Mode App.	Power Operation, Hot Standby, Startup, Hot Shutdown		1- Power Operation, 2-Startup, 3-Hot Standby, 4-Hot Shutdown
Site Specific Justifications	None		
Difference	None		
Deviation	None		

NEI IC#	NEI IC Wording	PBNP IC#(s)	PBNP IC Wording
RCS Loss 6	**Emergency Director Judgment** Any condition in the opinion of the Emergency Director that indicate Loss or Potential Loss of the RCS Barrier	RCS Loss 6	**Emergency Director Judgment** Any condition in the opinion of the Emergency Director that indicates Loss or Potential Loss of the RCS Barrier
Mode App.	Power Operation, Hot Standby, Startup, Hot Shutdown		1- Power Operation, 2-Startup, 3-Hot Standby, 4-Hot Shutdown
Site Specific Justifications	*EAL* – None *Basis* - The additional bulleted items in the basis for Emergency Director judgment are an amalgam of bases information from NEI 99-01 revision 4. The first bulleted item comes from the notes on Table 5-F-1 as well as sections 3.9 and 3.10 of the NEI document regarding "imminent" barrier loss. The second bulleted item is from the bases of IC HG1, loss of all AC, regarding degraded barrier monitoring capability that appears appropriate here. The third bulleted item also comes from the IC HG2 as well as SG2 (ATWS) regarding the importance of the use of Emergency Director judgment to make anticipatory declarations based on FPB monitoring		
Difference	Additional information was added to support EAL determination. The additional information does not impact the classification or intent of the associated EAL(s).		
Deviation	None		

NEI IC#	NEI IC Wording	PBNP IC#(s)	PBNP IC Wording
RCS P-Loss 1	**Critical Safety Function Status** RCS Integrity-Red OR Heat Sink-Red	RCS P-Loss 1	**Critical Safety Function Status** Conditions requiring entry into RCS Integrity-RED path (CSP-P.1) **OR** Conditions requiring entry into Heat Sink-RED path (CSP-H.1)
Mode App.	Power Operation, Hot Standby, Startup, Hot Shutdown		1- Power Operation, 2-Startup, 3-Hot Standby, 4-Hot Shutdown
Site Specific Justifications	*EAL* - ▪ CSP-P.1 – the Critical Safety Procedure that provides directions to avoid, or limit, thermal shock or pressurized thermal shock to the reactor pressure vessel or overpressurization conditions at low temperatures. ▪ CSP-H.1 - the Critical Safety Procedure that provides directions to respond to a loss of secondary heat sink in both steam generators *Basis* – The following wording was added to the basis section as justification for site specific references and does not alter the meaning or intent of the EAL. "Heat Sink-Red path is entered if narrow range level in any S/G is equal to or less than [51%] 29% and total feedwater flow to S/Gs is equal to or less than 200 gpm. The combination of these two conditions indicates the ultimate heat sink function is under extreme challenge. This condition addresses loss of functions required for hot shutdown with the reactor at pressure and temperature and thus a Potential Loss of the RCS barrier. [Ref. 11]. The barrier potential loss occurs when the plant parameter associated with the CSFST path is reached (not when the operator reads the CSFST in the EOP network). The phrase "Conditions requiring entry into..." is included in these thresholds to emphasize this intent."		
Difference	▪ Added words "Conditions requiring entry into... path (CSP-P.1)." Provides clarification that classification is based upon the condition defined in the CSFST. This is consistent with the NEI basis for the FPBs. ▪ These changes are not a deviation because they do not alter the meaning or intent, such that classification of the event could be different between the NEI guidance and the plant EAL		
Deviation	None		

NEI IC#	NEI IC Wording	PBNP IC#(s)	PBNP IC Wording
RCS P-Loss 2	**RCS Leak Rate** Unisolable leak exceeding the capacity of one charging pump in the normal charging mode	RCS P-Loss 2	**RCS Leak Rate** Unisolable leak exceeding 60 gpm
Mode App.	Power Operation, Hot Standby, Startup, Hot Shutdown		1- Power Operation, 2-Startup, 3-Hot Standby, 4-Hot Shutdown
Site Specific Justifications	*EAL* - 60 gpm: This threshold is based on the inability to maintain normal liquid inventory within the RCS by normal operation of the Chemical and Volume Control System, which is considered as one charging pump discharging to the charging header. The need for a second charging pump would be indicative of a substantial RCS leak. *Basis* - None		
Difference	None		
Deviation	None		

NEI EAL#	NEI EAL Wording	PBNP EAL#(s)	PBNP EAL Wording
RCS P-Loss 3	**SG Tube Rupture** Not Applicable	RCS P-Loss 3	**SG Tube Rupture** N/A
Mode App.	Power Operation, Hot Standby, Startup, Hot Shutdown		1- Power Operation, 2-Startup, 3-Hot Standby, 4-Hot Shutdown
Site Specific Justifications	None		
Difference	None		
Deviation	None		

NEI EAL#	NEI EAL Wording	PBNP EAL#(s)	PBNP EAL Wording
RCS P-Loss 4	**Containment Radiation Monitoring** Not Applicable	RCS P-Loss 4	**Containment Radiation Monitoring** N/A
Mode App.	Power Operation, Hot Standby, Startup, Hot Shutdown		1- Power Operation, 2-Startup, 3-Hot Standby, 4-Hot Shutdown
Site Specific Justifications	None		
Difference	None		
Deviation	None		

NEI EAL#	NEI EAL Wording	PBNP EAL#(s)	PBNP EAL Wording
RCS P-Loss 5	**Other (Site-Specific) Indications** (Site-specific) as applicable	RCS P-Loss 5	**Other (Site-Specific) Indications** N/A
Mode App.	Power Operation, Hot Standby, Startup, Hot Shutdown		1- Power Operation, 2-Startup, 3-Hot Standby, 4-Hot Shutdown
Site Specific Justifications	None		
Difference	None		
Deviation	None		

NEI EAL#	NEI EAL Wording	PBNP EAL#(s)	PBNP EAL Wording
RCS P-Loss 6	**Emergency Director Judgment** Any condition in the opinion of the Emergency Director that indicate Loss or Potential Loss of the RCS Barrier	RCS P-Loss 6	**Emergency Director Judgment** Any condition in the opinion of the Emergency Director that indicates Loss or Potential Loss of the RCS Barrier
Mode App.	Power Operation, Hot Standby, Startup, Hot Shutdown		1- Power Operation, 2-Startup, 3-Hot Standby, 4-Hot Shutdown
Site Specific Justifications	*EAL* – None *Basis* - The additional bulleted items in the basis for Emergency Director judgment are an amalgam of bases information from NEI 99-01 revision 4. The first bulleted item comes from the notes on Table 5-F-1 as well as sections 3.9 and 3.10 of the NEI document regarding "imminent" barrier loss. The second bulleted item is from the bases of IC HG1, loss of all AC, regarding degraded barrier monitoring capability that appears appropriate here. The third bulleted item also comes from the IC HG2 as well as SG2 (ATWS) regarding the importance of the use of Emergency Director judgment to make anticipatory declarations based on FPB monitoring		
Difference	Additional information was added to support EAL determination. The additional information does not impact the classification or intent of the associated EAL(s).		
Deviation	None		

NEI EAL#	NEI EAL Wording	PBNP EAL#(s)	PBNP EAL Wording
CMT Loss 1	**Critical Safety Function Status** Not Applicable	CMT Loss 1	**Critical Safety Function Status** N/A
Mode App.	Power Operation, Hot Standby, Startup, Hot Shutdown		1- Power Operation, 2-Startup, 3-Hot Standby, 4-Hot Shutdown
Site Specific Justifications	None		
Difference	None		
Deviation	None		

NEI EAL#	NEI EAL Wording	PBNP EAL#(s)	PBNP EAL Wording
CMT Loss 2	**<u>Containment Pressure</u>** Rapid unexplained decrease following initial increase OR Containment pressure or sump level response not consistent with LOCA conditions	CMT Loss 2	**<u>Containment Pressure</u>** Rapid unexplained lowering following initial rise **OR** Containment pressure or sump level response not consistent with LOCA conditions
Mode App.	Power Operation, Hot Standby, Startup, Hot Shutdown		1- Power Operation, 2-Startup, 3-Hot Standby, 4-Hot Shutdown
Site Specific Justifications	*EAL* – None *Basis* – The following wording was added to the basis section as justification of the site specific information and does not alter the meaning or intent of the EAL. ▪ FSAR Figure 14.3.2-1 illustrates containment pressure response for a bounding LOCA. Containment pressure peaks at approximately 34 psia. [Ref. 25, 26, 27, 28] ▪ If hydrogen concentration reaches or exceeds 6% in an oxygen rich environment, an explosive mixture exists. If the combustible mixture ignites inside containment, loss of the Containment barrier could occur. To generate such levels of combustible gas, loss of the Fuel Cladding and RCS barriers must also have occurred ▪ During a design basis accident, a minimum of two Containment Accident Fan Cooler Units with their accident fans running and one containment spray train are required to maintain the containment peak pressure and temperature below the design limits. Each Containment Spray train is a containment spray pump, spray header, nozzles, valves and piping. Each Containment Accident Fan Cooler Unit consists of cooling coils, accident backdraft damper, accident fan, service water outlet valves, and controls necessary to ensure an operable service water flow path. [Ref. 16, 20, 23]		
Difference	▪ Generic differences # 1 for "rise", # 2 for "lowering" and # 9 for "OR "apply. ▪ These changes are not a deviation because they do not alter the meaning or intent, such that classification of the event could be different between the NEI guidance and the plant EAL		
Deviation	None		

NEI EAL#	NEI EAL Wording	PBNP EAL#(s)	PBNP EAL Wording
CMT Loss 3	**Core Exit Thermocouple Readings** Not applicable	CMT Loss 3	**Core Exit Thermocouple Readings** N/A
Mode App.	Power Operation, Hot Standby, Startup, Hot Shutdown		1- Power Operation, 2-Startup, 3-Hot Standby, 4-Hot Shutdown
Site Specific Justifications	None		
Difference	None		
Deviation	None		

NEI EAL#	NEI EAL Wording	PBNP EAL#(s)	PBNP EAL Wording
CMT Loss 4	**<u>SG Secondary Side Release with P-to-S Leakage</u>** RUPTURED S/G is also FAULTED outside of containment OR Primary-to-Secondary leakrate greater than 10 gpm with nonisolable steam release from affected S/G to the environment	CMT Loss 4	**<u>SG Secondary Side Release with P-to-S Leakage</u>** RUPTURED S/G is also FAULTED outside of containment **OR** Primary-to-Secondary leakrate GREATER THAN 10 gpm with non-isolable steam release from affected S/G to the environment
Mode App.	Power Operation, Hot Standby, Startup, Hot Shutdown		1- Power Operation, 2-Startup, 3-Hot Standby, 4-Hot Shutdown
Site Specific Justifications	*EAL* – None *Basis* – The following wording was added to the basis section of the EAL as clarification for the Operator and does not alter the meaning or intent of the EAL. "A faulted S/G means the existence of secondary side leakage that results in an uncontrolled lowering in steam generator pressure or the steam generator being completely depressurized. A ruptured S/G means the existence of primary-to-secondary leakage of a magnitude sufficient to require or cause a reactor trip and safety injection. Confirmation should be based on diagnostic activities consistent with EOP-0, Reactor Trip or Safety Injection"		
Difference	▪ Generic differences # 6 for "GREATER THAN" and # 9 for "OR" applies. ▪ These changes are not a deviation because they do not alter the meaning or intent, such that classification of the event could be different between the NEI guidance and the plant EAL		
Deviation	None		

NEI EAL#	NEI EAL Wording	PBNP EAL#(s)	PBNP EAL Wording
CMT Loss 5	**<u>CNMT Isolation Valves Status After CNMT Isolation</u>** Valve(s) not closed AND downstream pathway to the environment exists	CMT Loss 5	**<u>CNMT Isolation Valves Status After CNMT Isolation</u>** Containment isolation valve(s) not closed **AND** Downstream pathway to the environment exists, after containment isolation
Mode App.	Power Operation, Hot Standby, Startup, Hot Shutdown		1- Power Operation, 2-Startup, 3-Hot Standby, 4-Hot Shutdown
Site Specific Justifications	*EAL* - None *Basis* - None		
Difference	▪ Generic difference # 11 for "AND" applies. ▪ This change is not a deviation because it does not alter the meaning or intent, such that classification of the event could be different between the NEI guidance and the plant EAL		
Deviation	None		

NEI EAL#	NEI EAL Wording	PBNP EAL#(s)	PBNP EAL Wording
CMT Loss 6	**Significant Radioactive Inventory in Containment** Not Applicable	CMT Loss 6	**Significant Radioactive Inventory in Containment** N/A
Mode App.	Power Operation, Hot Standby, Startup, Hot Shutdown		1- Power Operation, 2-Startup, 3-Hot Standby, 4-Hot Shutdown
Site Specific Justifications	None		
Difference	None		
Deviation	None		

NEI EAL#	NEI EAL Wording	PBNP EAL#(s)	PBNP EAL Wording
CMT Loss 7	**Other (Site-Specific) Indications** (Site-specific) as applicable	CMT Loss 7	**Other (Site-Specific) Indications** N/A
Mode App.	Power Operation, Hot Standby, Startup, Hot Shutdown		1- Power Operation, 2-Startup, 3-Hot Standby, 4-Hot Shutdown
Site Specific Justifications	None		
Difference	None		
Deviation	None		

NEI EAL#	NEI EAL Wording	PBNP EAL#(s)	PBNP EAL Wording
CMT Loss 8	**Emergency Director Judgment** Any condition in the opinion of the Emergency Director that indicates Loss or Potential Loss of the Containment barrier	CMT Loss 8	**Emergency Director Judgment** Any condition in the opinion of the Emergency Director that indicates Loss or Potential Loss of the Containment barrier
Mode App.	Power Operation, Hot Standby, Startup, Hot Shutdown		1- Power Operation, 2-Startup, 3-Hot Standby, 4-Hot Shutdown
Site Specific Justifications	*EAL* – None *Basis* - The additional bulleted items in the basis for Emergency Director judgment are an amalgam of bases information from NEI 99-01 revision 4. The first bulleted item comes from the notes on Table 5-F-1 as well as sections 3.9 and 3.10 of the NEI document regarding "imminent" barrier loss. The second bulleted item is from the bases of IC HG1, loss of all AC, regarding degraded barrier monitoring capability that appears appropriate here. The third bulleted item also comes from the IC HG2 as well as SG2 (ATWS) regarding the importance of the use of Emergency Director judgment to make anticipatory declarations based on FPB monitoring		
Difference	Additional information was added to support EAL determination. The additional information does not impact the classification or intent of the associated EAL(s).		
Deviation	None		

NEI EAL#	NEI EAL Wording	PBNP EAL#(s)	PBNP EAL Wording
CMT P-Loss 1	**Critical Safety Function Status** Containment-Red	CMT P-Loss 1	**Critical Safety Function Status** Conditions requiring entry into Containment-RED path (CSP-Z.1)
Mode App.	Power Operation, Hot Standby, Startup, Hot Shutdown		1- Power Operation, 2-Startup, 3-Hot Standby, 4-Hot Shutdown
Site Specific Justifications	*EAL* - CSP-Z.1 – the Critical Safety Procedure that provides directions to respond to high containment pressure *Basis* – The following wording was added to the basis section as justification for site specific information and does not alter the meaning or intent o the EAL. ▪ CSP-Z.1 is the Critical Safety Procedure that provides directions to respond to high containment pressure. [Ref. 16, 17, 18] ▪ The barrier potential loss occurs when the plant parameter associated with the CSFST path is reached (not when the operator reads the CSFST in the EOP network). The phrase "Conditions requiring entry into..." is included in these thresholds to emphasize this intent		
Difference	▪ Added words "Conditions requiring entry into..." Provides clarification that classification is based upon the condition defined in the CSFST as opposed to when the transition is made into the CSFT procedure. ▪ These changes are not a deviation because they do not alter the meaning or intent, such that classification of the event could be different between the NEI guidance and the plant EAL		
Deviation	None		

NEI EAL#	NEI EAL Wording	PBNP EAL#(s)	PBNP EAL Wording
CMT P-Loss 2	**Containment Pressure** (Site-specific) PSIG and increasing OR Explosive mixture exists OR Pressure greater than containment depressurization actuation setpoint with less than one full train of depressurization equipment operating	CMT P-Loss 2	**Containment Pressure** 60 psig and rising **OR** Hydrogen concentration in containment GREATER THAN OR EQUAL TO 6% **OR** Containment pressure GREATER THAN 25 psig with LESS THAN one full train of depressurization equipment operating
Mode App.	Power Operation, Hot Standby, Startup, Hot Shutdown		1- Power Operation, 2-Startup, 3-Hot Standby, 4-Hot Shutdown
Site Specific Justifications	*EAL* - ▪ "60 psig" – based on containment design pressure [Ref. FSAR Fig. 14.3.2-1, FSAR Table 14.3.2-1 through 14.3.2-3, FSAR 14.3.2 ▪ Hydrogen concentration in containment GREATER THAN OR EQUAL TO 6% - Hydrogen concentration is specified in the NEI basis for explosive mixture. ▪ GREATER THAN OR EQUAL TO 25 psig - 25 psig is the pressure at which the equipment should have actuated and began performing its function (BG-CSP-ST.0 Step ST-5) *Basis* – The following wording was added to the basis section as justification of the site specific information and does not alter the meaning or intent of the EAL. ▪ FSAR Figure 14.3.2-1 illustrates containment pressure response for a bounding LOCA. Containment pressure peaks at approximately 34 psia. [Ref. 25, 26, 27, 28] ▪ If hydrogen concentration reaches or exceeds 6% in an oxygen rich environment, an explosive mixture exists. If the combustible mixture ignites inside containment, loss of the Containment barrier could occur. To generate such levels of combustible gas, loss of the Fuel Cladding and RCS barriers must also have occurred ▪ During a design basis accident, a minimum of two Containment Accident Fan Cooler Units with their accident fans running and one containment spray train are required to maintain the containment peak pressure and temperature below the design limits. Each Containment Spray train is a containment spray pump, spray header, nozzles, valves and piping. Each Containment Accident Fan Cooler Unit consists of cooling coils, accident backdraft damper, accident fan, service water outlet valves, and controls necessary to ensure an operable service water flow path. [Ref. 16, 20, 23]		
Difference	▪ Generic differences # 6 for "GREATER THAN", # 8 for "LESS THAN", and # 9 for "**OR**" apply. ▪ These changes are not a deviation because they do not alter the meaning or intent, such that classification of the event could be different between the NEI guidance and the plant EAL		
Deviation	None		

NEI EAL#	NEI EAL Wording	PBNP EAL#(s)	PBNP EAL Wording
CMT P-Loss 3	**Core Exit Thermocouple Readings** Core exit thermocouples in excess of 1200 degrees and restoration procedures not effective within 15 minutes; or, core exit thermocouples in excess of 700 degrees with reactor vessel level below top of active fuel and restoration procedures not effective within 15 minutes	CMT P-Loss 3	**Core Exit Thermocouple Readings** Core exit thermocouples in excess of 1200°F and restoration procedures not effective within 15 minutes **OR** Core exit thermocouples in excess of 700°F with reactor vessel level below 27 ft RVLIS NR (with no RCPs running) top of active fuel and restoration procedures not effective within 15 minutes.
Mode App.	Power Operation, Hot Standby, Startup, Hot Shutdown		1- Power Operation, 2-Startup, 3-Hot Standby, 4-Hot Shutdown
Site Specific Justifications	*EAL* - ▪ 27 ft RVLIS NR (with no RCPs running) – corresponds to the level indication for reactor vessel level below top of active fuel. [Ref. CSFST CSP-C.1 step 25] *Basis* - None		
Difference	▪ Generic difference # 9 for "**OR**" applies. ▪ This change is not a deviation because it does not alter the meaning or intent, such that classification of the event could be different between the NEI guidance and the plant EAL		
Deviation	None		

NEI EAL#	NEI EAL Wording	PBNP EAL#(s)	PBNP EAL Wording
CMT P-Loss 5	**CNMT Isolation Valves Status After CNMT Isolation** Not Applicable	CMT P-Loss 5	**CNMT Isolation Valves Status After CNMT Isolation** N/A
Mode App.	Power Operation, Hot Standby, Startup, Hot Shutdown		1- Power Operation, 2-Startup, 3-Hot Standby, 4-Hot Shutdown
Site Specific Justifications	None		
Difference	None		
Deviation	None		

NEI EAL#	NEI EAL Wording	PBNP EAL#(s)	PBNP EAL Wording
CMT P-Loss 6	**<u>Significant Radioactive Inventory in Containment</u>** Containment rad monitor reading GREATER THAN (site-specific) R/hr	CMT P-Loss 6	**<u>Significant Radioactive Inventory in Containment</u>** Containment rad monitor reading GREATER THAN 15,900 R/hr indicated on the following: ▪ 1(2) RM-126 ▪ 1(2) RM-127 ▪ 1(2) RM-128
Mode App.	Power Operation, Hot Standby, Startup, Hot Shutdown		1- Power Operation, 2-Startup, 3-Hot Standby, 4-Hot Shutdown
Site Specific Justifications	*EAL* - ▪ 15,900 R/hr - indication of significant fuel damage with both loss of fuel clad and RCS barriers. (Ref Calc 2004-0006) ▪ 1(2) RM-126, 1(2) RM-127, 1(2) RM-128 – are the containment high range monitors utilized by operations for this EAL. *Basis* – The following wording was added to the basis section as justification for the site specific monitors selected and does not alter the meaning or intent of the EAL. ▪ Monitors used for this fission product barrier potential loss threshold are the containment high-range area monitors:1(2) RM-126, 1(2) RM-127, 1(2) RM-128		
Difference	None		
Deviation	None		

NEI EAL#	NEI EAL Wording	PBNP EAL#(s)	PBNP EAL Wording
CMT P-Loss 7	**Other (Site-Specific) Indications** (Site-specific) as applicable	CMT P-Loss 7	**Other (Site-Specific) Indications** N/A
Mode App.	Power Operation, Hot Standby, Startup, Hot Shutdown		1- Power Operation, 2-Startup, 3-Hot Standby, 4-Hot Shutdown
Site Specific Justifications	None		
Difference	None		
Deviation	None		

NEI EAL#	NEI EAL Wording	PBNP EAL#(s)	PBNP EAL Wording
CMT P-Loss 8	**Emergency Director Judgment** Any condition in the opinion of the Emergency Director that indicates Loss or Potential Loss of the Containment barrier	CMT P-Loss 8	**Emergency Director Judgment** Any condition in the opinion of the Emergency Director that indicates Loss or Potential Loss of the Containment barrier
Mode App.	Power Operation, Hot Standby, Startup, Hot Shutdown		1- Power Operation, 2-Startup, 3-Hot Standby, 4-Hot Shutdown
Site Specific Justifications	*EAL* – None *Basis* - The additional bulleted items in the basis for Emergency Director judgment are an amalgam of bases information from NEI 99-01 revision 4. The first bulleted item comes from the notes on Table 5-F-1 as well as sections 3.9 and 3.10 of the NEI document regarding "imminent" barrier loss. The second bulleted item is from the bases of IC HG1, loss of all AC, regarding degraded barrier monitoring capability that appears appropriate here. The third bulleted item also comes from the IC HG2 as well as SG2 (ATWS) regarding the importance of the use of Emergency Director judgment to make anticipatory declarations based on FPB monitoring		
Difference	Additional information was added to support EAL determination. The additional information does not impact the classification or intent of the associated EAL(s).		
Deviation	None		

HAZARDS AND OTHER CONDITIONS AFFECTING PLANT SAFETY

Site Specific
Information/Differences/Deviations
Justifications

NEI IC#	NEI IC Wording	PBNP IC#(s)	PBNP IC Wording
HU1	Natural and Destructive Phenomena Affecting the PROTECTED AREA	HU1	Natural and Destructive Phenomena Affecting the PROTECTED AREA
Mode App.	All		All
Site Specific Justifications	None		
Difference	None		
Deviation	None		

NEI EAL#	NEI EAL Wording	PBNP EAL#(s)	PBNP EAL Wording
1	(Site-Specific) method indicates felt earthquake	HU1.1	Earthquake felt in plant as indicated by Activation of 2 or more seismic monitors **AND** Verified by • Actual ground shaking **OR** • By contacting the U.S Geological Survey National Earthquake Center
Site Specific Justifications	*EAL* – ▪ "Activation of 2 or more seismic monitors" is used to eliminate classification based on a single monitor reading which may be the results of actions in the area other than an actual seismic event. As defined in the EPRI-sponsored "Guidelines for Nuclear Plant Response to an Earthquake", dated October 1989, a *"felt earthquake"* is: An earthquake of sufficient intensity such that: (a) the vibratory ground motion is felt at the nuclear plant site and recognized as an earthquake based on a consensus of control room operators on duty at the time, and (b) for plants with operable seismic instrumentation, the seismic switches of the plant are activated. For most plants with seismic instrumentation, the seismic switches are set at an acceleration of about 0.01g. ▪ "..contacting US Geological Survey National Earthquake Center" – is the current method utilized to verify earthquake activity This EAL reflects the site-specific method of indicating a felt earthquake. Method of detection is based on instrumentation, validated by a reliable source (U.S. Geological Survey National Earthquake Information Center), or operator assessment [Ref. 1, 2, 3, 4] *Basis* - None		
Difference	▪ Generic differences # 9 for "OR", # 11 for "AND", and # 16 for "site-specific" apply ▪ These changes are not a deviation because they do not alter the meaning or intent, such that classification of the event could be different between the NEI guidance and the plant EAL		
Deviation	None		

NEI IC#	NEI IC Wording	PBNP IC#(s)	PBNP IC Wording
HU1	Natural and Destructive Phenomena Affecting the PROTECTED AREA	HU1	Natural and Destructive Phenomena Affecting the PROTECTED AREA
Mode App.	All		All
Site Specific Justifications	None		
Difference	None		
Deviation	None		

NEI EAL#	NEI EAL Wording	PBNP EAL#(s)	PBNP EAL Wording
2	Report by plant personnel of tornado or high winds greater than (site-specific) mph striking within PROTECTED AREA boundary	HU1.2	Report by plant personnel of tornado or high winds GREATER THAN 108 mph (15 minute average) striking within PROTECTED AREA boundary
Site Specific Justifications	*EAL* - ▪ Adding "(15 minute average)" to define indication to be used. Meteorological data is provided to the control room as a "15 minute average" readout. ▪ 108 mph is the site specific value for OBE. The high wind site specific value is based on the FSAR design basis sustained wind speed of 108 mph. Wind loads of this magnitude can cause damage to safety functions. If such damage is confirmed visually or by other in-plant indications, the event may be escalated to Alert. [Ref. 5, 6, 7] *Basis* – The wording "The high wind site specific value is based on the FSAR design basis sustained wind speed of 108 mph. Wind loads of this magnitude can cause damage to safety functions" was added to the basis section to justify the site specific wind speed utilized and does not alter the meaning or intent of the EAL.		
Difference	• Generic difference #6 for "GREATER THAN" applies. • This change is not a deviation because it does not alter the meaning or intent, such that classification of the event could be different between the NEI guidance and the plant EAL		
Deviation	None		

NEI IC#	NEI IC Wording	PBNP IC#(s)	PBNP IC Wording
HU1	Natural and Destructive Phenomena Affecting the PROTECTED AREA	HU1	Natural and Destructive Phenomena Affecting the PROTECTED AREA
Mode App.	All		All
Site Specific Justifications	None		
Difference	None		
Deviation	None		

NEI EAL#	NEI EAL Wording	PBNP EAL#(s)	PBNP EAL Wording
3	Vehicle crash into plant structures or systems within PROTECTED AREA boundary	HU1.3	Vehicle crash into plant structures or systems within the PROTECTED AREA boundary
Site Specific Justifications	*EAL* – None *Basis* - None		
Difference	None		
Deviation	None		

NEI IC#	NEI IC Wording	PBNP IC#(s)	PBNP IC Wording
HU1	Natural and Destructive Phenomena Affecting the PROTECTED AREA	HU1	Natural and Destructive Phenomena Affecting the PROTECTED AREA
Mode App.	All		All
Site Specific Justifications	None		
Difference	None		
Deviation	None		

NEI EAL#	NEI EAL Wording	PBNP EAL#(s)	PBNP EAL Wording
4	Report by plant personnel of an unanticipated EXPLOSION within PROTECTED AREA boundary resulting in VISIBLE DAMAGE to permanent structure or equipment	HU1.4	Report by plant personnel of an unanticipated EXPLOSION within PROTECTED AREA boundary resulting in VISIBLE DAMAGE to permanent structure or equipment
Site Specific Justifications	*EAL* – None *Basis* - None		
Difference	None		
Deviation	None		

NEI IC#	NEI IC Wording	PBNP IC#(s)	PBNP IC Wording
HU1	Natural and Destructive Phenomena Affecting the PROTECTED AREA	HU1	Natural and Destructive Phenomena Affecting the PROTECTED AREA
Mode App.	All		All
Site Specific Justifications	None		
Difference	None		
Deviation	None		

NEI EAL#	NEI EAL Wording	PBNP EAL#(s)	PBNP EAL Wording
5	Report of turbine failure resulting in casing penetration or damage to turbine or generator seals	HU1.5	Report of turbine failure resulting in casing penetration or damage to turbine or generator seals
Site Specific Justifications	*EAL* – None *Basis* - None		
Difference	None		
Deviation	None		

NEI IC#	NEI IC Wording	PBNP IC#(s)	PBNP IC Wording
HU1	Natural and Destructive Phenomena Affecting the PROTECTED AREA	HU1	Natural and Destructive Phenomena Affecting the PROTECTED AREA
Mode App.	All		All
Site Specific Justifications	None		
Difference	None		
Deviation	None		

NEI EAL#	NEI EAL Wording	PBNP EAL#(s)	PBNP EAL Wording
6	Uncontrolled flooding in (site-specific) areas of the plant that has the potential to affect safety related equipment needed for the current operating mode	HU1.6	Uncontrolled flooding in the following areas of the plant that has the potential to affect safety related equipment needed for current operating mode: Auxiliary building caused by rupture of the SW header **OR** Water intake structure caused by rupture of a circulating water system expansion joint or fire water main.
Site Specific Justifications	*EAL* - "Auxiliary building caused by rupture of the SW header" and "Water intake structure caused by rupture of a circulating water system expansion joint or fire water main" are the site specific areas identified in the Engineering evaluation (PBNP Individual Plant Examination (IPE) for internal events and internal flood). [Ref 11,12,13,14] *Basis* – The following wording was added to the basis section as justification for the area selected as susceptible to flooding based on the IPE and does not alter the meaning or intent of the EAL. "The auxiliary building and water intake structure are the vulnerable areas indicated in the IPE that contain systems required for safe shutdown of the plant, that are not designed to be wetted or submerged. Escalation of the emergency classification is based on the damage caused or by access restrictions that prevent necessary plant operations or systems monitoring. [Ref. 11, 12]"		
Difference	• Generic differences # 9 for "**OR**" and # 16 for "site-specific" apply. • These changes are not a deviation because they do not alter the meaning or intent, such that classification of the event could be different between the NEI guidance and the plant EAL		
Deviation	None		

NEI IC#	NEI IC Wording	PBNP IC#(s)	PBNP IC Wording
HU1	Natural and Destructive Phenomena Affecting the PROTECTED AREA	HU1	Natural and Destructive Phenomena Affecting the PROTECTED AREA
Mode App.	All		All
Site Specific Justifications	None		
Difference	None		
Deviation	None		

NEI EAL#	NEI EAL Wording	PBNP EAL#(s)	PBNP EAL Wording
7	(Site Specific) occurrences affecting the PROTECTED AREA	HU1.7	Lake (forebay) level GREATER THAN OR EQUAL TO 8.0 ft (587.2 ft IGLD)
Site Specific Justifications	*EAL* – 8 ft (587.2 ft IGLD) – corresponds to lake level flooding based on FSAR Section 2.5 and International Great Lakes Datum information. *Basis* – Added the wording "Lake water level GREATER THAN OR EQUAL TO 8 feet (587.2 ft elevation IGLD) corresponds to the Turbine Building floor elevation. Both the Turbine Building and Circ Water Pump house are specifically susceptible to external flooding" to provide additional information on the affects of flooding. This is provided as an aid to Operators and does not alter the meaning or intent of the EAL.		
Difference	None		
Deviation	None		

NEI IC#	NEI IC Wording	PBNP IC#(s)	PBNP IC Wording
HU2	FIRE Within PROTECTED AREA Boundary Not Extinguished Within 15 Minutes of Detection	HU2	FIRE within PROTECTED AREA Boundary Not Extinguished Within 15 Minutes of Detection
Mode App.	All		All
Site Specific Justifications	None		
Difference	None		
Deviation	None		

NEI EAL#	NEI EAL Wording	PBNP EAL#(s)	PBNP EAL Wording
1	FIRE in buildings or areas contiguous to any of the following (site-specific) areas not extinguished within 15 minutes of control room notification or verification of a control room alarm: (Site-specific) list	HU2.1	FIRE in buildings or areas contiguous to any of the Table H-1 areas not extinguished within 15 minutes of control room notification or verification of a control room alarm. **Table H-1 VITAL AREAS** • 1(2) Containment Building • Primary auxiliary building • Turbine Building • Control Building • Diesel Generator Building • Gas Turbine Building • Circ Water Pump House
Site Specific Justifications	*EAL* – Table H-1 Vital Areas – This is a list of site specific areas which contain or are contiguous to areas containing equipment needed for safe operation of the plant *Basis* - None		
Difference	None		
Deviation	None		

NEI IC#	NEI IC Wording	PBNP IC#(s)	PBNP IC Wording
HU3	Release of Toxic or Flammable Gases Deemed Detrimental to Normal Operation of the Plant	HU3	Release of Toxic or Flammable Gases Deemed Detrimental to Normal Operation of the Plant
Mode App.	All		All
Site Specific Justifications	None		
Difference	None		
Deviation	None		

NEI EAL#	NEI EAL Wording	PBNP EAL#(s)	PBNP EAL Wording
1	Report or detection of toxic or flammable gases that has or could enter the site area boundary in amounts that can affect NORMAL PLANT OPERATIONS	HU3.1	Report or detection of toxic or flammable gases that has or could enter the site area boundary in amounts that could affect NORMAL PLANT OPERATIONS
Site Specific Justifications	*EAL* – None *Basis* - None		
Difference	None		
Deviation	None		

NEI IC#	NEI IC Wording	PBNP IC#(s)	PBNP IC Wording
HU3	Release of Toxic or Flammable Gases Deemed Detrimental to Normal Operation of the Plant	HU3	Release of Toxic or Flammable Gases Deemed Detrimental to Normal Operation of the Plant
Mode App.	All		All
Site Specific Justifications	None		
Difference	None		
Deviation	None		

NEI EAL#	NEI EAL Wording	PBNP EAL#(s)	PBNP EAL Wording
2	Report by Local, County or State Officials for evacuation or sheltering of site personnel based on an offsite event	HU3.2	Report by Local, County or State officials for evacuation or sheltering of site personnel based on an offsite event
Site Specific Justifications	*EAL* – None *Basis* - None		
Difference	None		
Deviation	None		

NEI IC#	NEI IC Wording	PBNP IC#(s)	PBNP IC Wording
HU4	Confirmed Security Event Which Indicates a Potential Degradation in the Level of Safety of the Plant	HU4	Confirmed Security Event Which Indicates a Potential Degradation in the Level of Safety of the Plant
Mode App.	All		All
Site Specific Justifications	None		
Difference	None		
Deviation	None		

NEI EAL#	NEI EAL Wording	PBNP EAL#(s)	PBNP EAL Wording
1	Security events as determined from (site-specific) Safeguards Contingency Plan and reported by the (site-specific) security shift supervision	HU4.1	Security Shift Supervisor reports ANY of the following: ▪ Suspected sabotage device discovered within the plant Protected Area ▪ Suspected sabotage device discovered outside the Protected Area or in the plant switchyard ▪ Confirmed tampering with safety related equipment ▪ A hostage situation that disrupts NORMAL PLANT OPERATIONS ▪ Civil disturbance or strike that disrupts NORMAL PLANT OPERATIONS that is <u>not</u> short lived or that is not a harmless outburst involving ANY individuals within the Protected Area ▪ Malevolent use of a vehicle outside the Protected Area which disrupts NORMAL PLANT OPERATIONS.
Site Specific Justifications	*EAL* - "Suspected sabotage device discovered within the plant Protected Area, Suspected sabotage device discovered outside the Protected Area or in the plant switchyard, Confirmed tampering with safety related equipment, A hostage situation that disrupts NORMAL PLANT OPERATIONS, Civil disturbance or strike that disrupts NORMAL PLANT OPERATIONS that is <u>not</u> short lived or that is not a harmless outburst involving ANY individuals within the Protected Area, Malevolent use of a vehicle outside the Protected Area which disrupts NORMAL PLANT OPERATIONS" – is the list of site specific events from the Physical Security Plan [Ref. 2] *Basis* - None		
Difference	• Generic difference # 16 for "site-specific" applies. • This change is not a deviation because it does not alter the meaning or intent, such that classification of the event could be different between the NEI guidance and the plant EAL		
Deviation	None		

NEI IC#	NEI IC Wording	PBNP IC#(s)	PBNP IC Wording
HU4	Confirmed Security Event Which Indicates a Potential Degradation in the Level of Safety of the Plant	HU4	Confirmed Security Event Which Indicates a Potential Degradation in the Level of Safety of the Plant
Mode App.	All		All
Site Specific Justifications	None		
Difference	None		
Deviation	None		

NEI EAL#	NEI EAL Wording	PBNP EAL#(s)	PBNP EAL Wording
2	A credible site-specific security threat notification	HU4.2	Notification of a credible site-specific threat by the Security Shift Supervisor or outside agency (e.g., NRC, military or law enforcement)
Site Specific Justifications	*EAL* - "by the Security Shift Supervisor or outside agency (NRC, military or law enforcement)" – is the site specific list of notification methods as described in the Physical Security Plan *Basis* - None		
Difference	▪ "Notification" listed first in the EAL as a method of improved human factoring for the user. ▪ This change is not a deviation because it does not alter the meaning or intent, such that classification of the event could be different between the NEI guidance and the plant EAL		
Deviation	None		

NEI IC#	NEI IC Wording	PBNP IC#(s)	PBNP IC Wording
HU5	Other Conditions Existing Which in the Judgment of the Emergency Director Warrant Declaration of a NOUE	HU5	Other Conditions Existing Which in the Judgment of the Emergency Director Warrant Declaration of a UE
Mode App.	All		All
Site Specific Justifications	None		
Difference	• Generic difference # 3 for "Unusual Event" applies. • This change is not a deviation because it does not alter the meaning or intent, such that classification of the event could be different between the NEI guidance and the plant EAL		
Deviation	None		

NEI EAL#	NEI EAL Wording	PBNP EAL#(s)	PBNP EAL Wording
1	Other conditions exist which in the judgment of the Emergency Director indicate that events are in process or have occurred which indicate a potential degradation of the level of safety of the plant. No releases of radioactive material requiring offsite response or monitoring are expected unless further degradation of safety systems occurs	HU5.1	Other conditions exist which in the judgment of the Emergency Director indicate that events are in process or have occurred which indicate a potential degradation of the level of safety of the plant. No releases of radioactive material requiring offsite response or monitoring are expected unless further degradation of safety systems occurs
Site Specific Justifications	*EAL* – None *Basis* - None		
Difference	None		
Deviation	None		

NEI IC#	NEI IC Wording	PBNP IC#(s)	PBNP IC Wording
HA1	Natural and Destructive Phenomena Affecting the Plant VITAL AREA	HA1	Natural and Destructive Phenomena Affecting the Plant VITAL AREA
Mode App.	All		All
Site Specific Justifications	None		
Difference	None		
Deviation	None		

NEI EAL#	NEI EAL Wording	PBNP EAL#(s)	PBNP EAL Wording
1	(Site-Specific) method indicates Seismic Event greater than Operating Basis Earthquake (OBE)	HA1.1	Seismic event GREATER THAN Operating basis earthquake (OBE) as indicated by VALID seismic monitor indication of ground acceleration **EITHER:** GREATER THAN OR EQUAL TO 0.06 g horizontal **OR** GREATER THAN OR EQUAL TO 0.04 g vertical
Site Specific Justifications	*EAL* – 0.06 g horizontal and 0.04 g vertical - based on the FSAR operating basis earthquake (OBE) of 0.06 g horizontal or 0.04 g vertical acceleration. Seismic events of this magnitude can result in a plant VITAL AREA being subjected to forces beyond design limits, and thus damage may be assumed to have occurred to plant safety systems. [Ref. 1, 2, 3, 4] *Basis* – Added the wording "HA1.1 is based on the FSAR operating basis earthquake (OBE) of 0.06 g horizontal or 0.04 g vertical acceleration" to the basis section as justification of threshold values listed and do not alter the meaning or intent of the EAL.		
Difference	• Generic differences # 9 for "**OR**", # 13 for "**EITHER**", and # 16 for "site-specific" apply • These changes are not a deviation because they do not alter the meaning or intent, such that classification of the event could be different between the NEI guidance and the plant EAL		
Deviation	None		

NEI IC#	NEI IC Wording	PBNP IC#(s)	PBNP IC Wording
HA1	Natural and Destructive Phenomena Affecting the Plant VITAL AREA	HA1	Natural and Destructive Phenomena Affecting the Plant VITAL AREA
Mode App.	All		All
Site Specific Justifications	None		
Difference	None		
Deviation	None		

NEI EAL#	NEI EAL Wording	PBNP EAL#(s)	PBNP EAL Wording
2	Tornado or high winds greater than (site-specific) mph within PROTECTED AREA boundary and resulting in VISIBLE DAMAGE to any of the following plant structures / equipment or Control Room indication of degraded performance of those systems. • Reactor Building • Intake Building • Ultimate Heat Sink • Refueling Water Storage Tank • Diesel Generator Building • Turbine Building • Condensate Storage Tank • Control Room • Other (Site-Specific) Structures	HA1.2	Tornado or high winds (15 minute average) GREATER THAN 108 mph within PROTECTED AREA boundary and resulting in VISIBLE DAMAGE to any of the following plant structures/equipment or Control Room indication of degraded performance of those systems • Reactor Building • Intake Building • Refueling Water Storage Tank • Diesel Generator Building • Turbine Building • Condensate Storage Tank • Control Room
Site Specific Justifications	*EAL* - ▪ Adding "(15 minute average)" to define indication to be used. Meteorological data is provided to the control room as a "15 minute average" readout. ▪ 108 mph is the wind speed noted as the DBE (Ref. FSAR Volume 3, Wind and Tornado Forces) The high wind site specific value is based on the FSAR design basis sustained wind speed of 108 mph. Wind loads of this magnitude can cause damage to safety functions. [Ref. 5] ▪ The list of plant structures/equipment containing functions required for safe shutdown of the plant. [Ref. 2] Ultimate Heat Sink is not included in this list as there were no events identified which would adversely impact Lake Level [Ref. 13] *Basis* – added the following wording was added to the basis section as justification of the selected wind speed and resource information and does not alter the meaning or intent of the EAL. ▪ HA1.2 is based on the FSAR design basis sustained wind speed of 108 mph		

	▪ Wind speed is measured as the 15 minute average wind speed. This EAL addresses events that may have resulted in a plant VITAL AREA being subjected to forces beyond design limits and thus damage may be assumed to have occurred to plant structures, systems or equipment. [Ref. 5, 6] The list of plant structures/equipment contains functions required for safe shutdown of the plant. Ultimate Heat Sink is not included in this list as there are no events identified which would adversely impact Lake Level and the system pumps and associated equipment which are located in the Intake Building and other listed structures
Difference	• Generic difference # 6 for "GREATER THAN" applies. • This change is not a deviation because it does not alter the meaning or intent, such that classification of the event could be different between the NEI guidance and the plant EAL
Deviation	None

NEI IC#	NEI IC Wording	PBNP IC#(s)	PBNP IC Wording
HA1	Natural and Destructive Phenomena Affecting the Plant VITAL AREA	HA1	Natural and Destructive Phenomena Affecting the Plant VITAL AREA
Mode App.	All		All
Site Specific Justifications	None		
Difference	None		
Deviation	None		

NEI EAL#	NEI EAL Wording	PBNP EAL#(s)	PBNP EAL Wording
3	Vehicle crash within PROTECTED AREA boundary and resulting in VISIBLE DAMAGE to any of the following plant structures or equipment therein or control indication of degraded performance of those systems: • Reactor Building • Intake Building • Ultimate Heat Sink • Refueling Water Storage Tank • Diesel Generator Building • Turbine Building • Condensate Storage Tank • Control Room • Other (Site-Specific) Structures.	HA1.3	Vehicle crash within PROTECTED AREA boundary and resulting in VISIBLE DAMAGE to any of the following plant structures or equipment therein or control room indication of degraded performance of those systems • Reactor Building • Intake Building • Refueling Water Storage Tank • Diesel Generator Building • Turbine Building • Condensate Storage Tank • Control Room
Site Specific Justifications	*EAL* - The list of plant structures/equipment containing functions required for safe shutdown of the plant. [Ref. 2] Ultimate Heat Sink is not included in this list as there were no events identified which would adversely impact Lake Level [Ref. 13] *Basis* – The following wording was added to the basis section as justification for the site specific list of areas selected and does not alter the meaning or intent of the EAL. "The list of plant structures/equipment contains functions required for safe shutdown of the plant. Ultimate Heat Sink is not included in this list as there are no events identified which would adversely impact Lake Level and the system pumps and associated equipment, which are located in the Intake Building and other listed structures"		
Difference	None		
Deviation	None		

NEI IC#	NEI IC Wording	PBNP IC#(s)	PBNP IC Wording
HA1	Natural and Destructive Phenomena Affecting the Plant VITAL AREA	HA1	Natural and Destructive Phenomena Affecting the Plant VITAL AREA
Mode App.	All		All
Site Specific Justifications	None		
Difference	None		
Deviation	None		

NEI EAL#	NEI EAL Wording	PBNP EAL#(s)	PBNP EAL Wording
4	Turbine failure-generated missiles result in any VISIBLE DAMAGE to or penetration of any of the following plant areas: (site-specific) list.	HA1.4	Turbine failure generated missiles resulting in any VISIBLE DAMAGE to or penetrating any of the following plant areas • Reactor Building • Intake Building • Refueling Water Storage Tank • Diesel Generator Building • Turbine Building • Condensate Storage Tank • Control Room
Site Specific Justifications	*EAL* - The list of plant structures/equipment containing functions required for safe shutdown of the plant. [Ref. 2] Ultimate Heat Sink is not included in this list as there were no events identified which would adversely impact Lake Level [Ref. 13] *Basis* – Added the following wording to the basis section as justification for the plant areas selected. This does not alter the meaning or intent of the EAL. "The list of plant structures/equipment containing functions required for safe shutdown of the plant. Ultimate Heat Sink is not included in this list as there are no events identified which would adversely impact Lake Level and the system pumps associated equipment, which are located in the Intake Building and other listed structures"		
Difference	None		
Deviation	None		

NEI IC#	NEI IC Wording	PBNP IC#(s)	PBNP IC Wording
HA1	Natural and Destructive Phenomena Affecting the Plant VITAL AREA	HA1	Natural and Destructive Phenomena Affecting the Plant VITAL AREA
Mode App.	All		All
Site Specific Justifications	None		
Difference	None		
Deviation	None		

NEI EAL#	NEI EAL Wording	PBNP EAL#(s)	PBNP EAL Wording
5	Uncontrolled flooding in (site-specific) areas of the plant that results in degraded safety system performance as indicated in the control room or that creates industrial safety hazards (e.g., electric shock) that precludes access necessary to operate or monitor safety equipment	HA1.5	Uncontrolled flooding in the following areas of the plant that results in degraded safety system performance as indicated in the control room or that creates industrial safety hazards (e.g., electric shock) that precludes access necessary to operate or monitor safety equipment Auxiliary Building caused by rupture of the SW header **OR** Water intake structure caused by rupture of a circulating water system expansion joint or water main
Site Specific Justifications	*EAL* - "Auxiliary building caused by rupture of the SW header" and "Water intake structure caused by rupture of a circulating water system expansion joint or fire water main" are the site specific areas identified in the Engineering evaluation (PBNP Individual Plant Examination (IPE) for internal events and internal flood) *Basis* – Added the following wording to the basis section as justification of areas selected. This wording does not alter the meaning or intent of the EAL. "The auxiliary building and water intake structure are those areas identified in the IPE that contain systems required for safe shutdown of the plant, that are not designed to be wetted or submerged"		
Difference	• Generic differences # 9 for "**OR**" and # 16 for "site-specific" apply. • These changes are not a deviation because they do not alter the meaning or intent, such that classification of the event could be different between the NEI guidance and the plant EAL		
Deviation	None		

NEI IC#	NEI IC Wording	PBNP IC#(s)	PBNP IC Wording
HA1	Natural and Destructive Phenomena Affecting the Plant VITAL AREA	HA1	Natural and Destructive Phenomena Affecting the Plant VITAL AREA
Mode App.	All		All
Site Specific Justifications	None		
Difference	None		
Deviation	None		

NEI EAL#	NEI EAL Wording	PBNP EAL#(s)	PBNP EAL Wording
6	(Site-Specific) occurrences within PROTECTED AREA boundary and resulting in VISIBLE DAMAGE to plant structures containing equipment necessary for safe shutdown, or has caused damage as evidenced by control room indication of degraded performance of those systems	HA1.6	Lake (forebay) level GREATER THAN OR EQUAL TO 9.0 ft (588.2 ft IGLD)
Mode App.	All		All
Site Specific Justifications	*EAL* – 9.0 ft (588.2 ft IGLD)- – corresponds to lake level flooding based on FSAR Section 2.5 and International Great Lakes Datum information *Basis* – Added the wording "Lake water level GREATER THAN OR EQUAL TO 8 feet (587.2 ft elevation IGLD) corresponds to the Turbine Building floor elevation. Both the Turbine Building and Circ Water Pump house are specifically susceptible to external flooding" to provide additional information on the affects of flooding. This is provided as an aid to Operators and does not alter the meaning or intent of the EAL.		
Difference	None		
Deviation	None		

NEI IC#	NEI IC Wording	PBNP IC#(s)	PBNP IC Wording
HA2	FIRE or EXPLOSION Affecting the Operability of Plant Safety Systems Required to Establish or Maintain Safe Shutdown	HA2	FIRE or EXPLOSION Affecting the Operability of Plant Safety Systems Required to Establish or Maintain Safe Shutdown
Mode App.	All		All
Site Specific Justifications	None		
Difference	None		
Deviation	None		

NEI EAL#	NEI EAL Wording	PBNP EAL#(s)	PBNP EAL Wording
1	FIRE or EXPLOSION in any of the following (site-specific) areas: (Site-specific) list **AND** Affected system parameter indications show degraded performance or plant personnel report VISIBLE DAMAGE to permanent structures or equipment within the specified area	HA2.1	FIRE or EXPLOSION in any of the following areas (Table H-1) **Table H-1 VITAL AREAS** • 1(2) Containment Building • Primary auxiliary building • Turbine Building • Control Building • Diesel Generator Building • Gas Turbine Building • Circ Water Pump House **AND** Affected safety system parameter indications show degraded performance or plant personnel report VISIBLE DAMAGE to permanent structures or equipment within the specific area.
Site Specific Justifications	*EAL* - Table H-1 provides the plant-specific list of structures which encompass plant vital areas and areas contiguous to plant vital areas. These areas contain systems and components required for the safe shutdown functions of the plant. The PBNP safe shutdown analyses were consulted for equipment and plant areas required for the applicable mode *Basis* – The following was added to the basis section as justification for the areas selected and does not alter the meaning or intent of the EAL. "The list of plant structures/equipment contains functions required for safe shutdown of the plant. Ultimate Heat Sink is not included in this list as there are no events identified which would adversely impact Lake Level and the system pumps and associated equipment, which are located in the Intake Building and other listed structures."		
Difference	None		
Deviation	None		

NEI IC#	NEI IC Wording	PBNP IC#(s)	PBNP IC Wording
HA3	Release of Toxic or Flammable Gases Within or Contiguous to a VITAL AREA Which Jeopardizes Operation of Systems Required to Maintain Safe Operations or Establish or Maintain Safe Shutdown	HA3	Release of Toxic or Flammable Gases Within or Contiguous to a VITAL AREA Which Jeopardizes Operation of Systems Required to Maintain Safe Operations or Establish or Maintain Safe Shutdown
Mode App.	All		All
Site Specific Justifications	None		
Difference	None		
Deviation	None		

NEI EAL#	NEI EAL Wording	PBNP EAL#(s)	PBNP EAL Wording
1	Report or detection of toxic gases within or contiguous to a VITAL AREA in concentrations that may result in an atmosphere IMMEDIATELY DANGEROUS TO LIFE AND HEALTH (IDLH)	HA3.1	Report or detection of toxic gases within or contiguous to a VITAL AREA (Table H-1) in concentrations that may result in an atmosphere IMMEDIATELY DANGEROUS TO LIFE AND HEALTH (IDLH) **Table H-1 VITAL AREAS** • 1(2) Containment Building • Primary auxiliary building • Turbine Building • Control Building • Diesel Generator Building • Gas Turbine Building • Circ Water Pump House
Site Specific Justifications	*EAL* - Table H-1 provides the plant-specific list of structures which encompass plant vital areas and areas contiguous to plant vital areas. These areas contain systems and components required for the safe shutdown functions of the plant. The PBNP safe shutdown analyses were consulted for equipment and plant areas required for the applicable mode *Basis* –None		
Difference	None		
Deviation	None		

NEI IC#	NEI IC Wording	PBNP IC#(s)	PBNP IC Wording
HA3	Release of Toxic or Flammable Gases Within or Contiguous to a VITAL AREA Which Jeopardizes Operation of Systems Required to Maintain Safe Operations or Establish or Maintain Safe Shutdown	HA3	Release of Toxic or Flammable Gases Within or Contiguous to a VITAL AREA Which Jeopardizes Operation of Systems Required to Maintain Safe Operations or Establish or Maintain Safe Shutdown
Mode App.	All		All
Site Specific Justifications	None		
Difference	None		
Deviation	None		

NEI EAL#	NEI EAL Wording	PBNP EAL#(s)	PBNP EAL Wording
2	Report or detection of gases in concentration greater than the LOWER FLAMMABILITY LIMIT within or contiguous to a VITAL AREA	HA3.2	Report or detection of gases in concentrations GREATER THAN the LOWER FLAMMABILITY LIMIT within or contiguous to a VITAL AREA (Table H-1) **Table H-1 VITAL AREAS** • 1(2) Containment Building • Primary auxiliary building • Turbine Building • Control Building • Diesel Generator Building • Gas Turbine Building • Circ Water Pump House
Site Specific Justifications	*EAL* - Table H-1 provides the plant-specific list of structures which encompass plant vital areas and areas contiguous to plant vital areas. These areas contain systems and components required for the safe shutdown functions of the plant. The PBNP safe shutdown analyses were consulted for equipment and plant areas required for the applicable mode *Basis* - None		
Difference	• Generic difference # 6 for "GREATER THAN" applies. • This change is not a deviation because it does not alter the meaning or intent, such that classification of the event could be different between the NEI guidance and the plant EAL		
Deviation	None		

NEI IC#	NEI IC Wording	PBNP IC#(s)	PBNP IC Wording
HA4	Confirmed Security Event in a Plant PROTECTED AREA	HA4	Confirmed security event in a Plant PROTECTED AREA
Mode App.	All		All
Site Specific Justifications	None		
Difference	None		
Deviation	None		

NEI EAL#	NEI EAL Wording	PBNP EAL#(s)	PBNP EAL Wording
1	INTRUSION into the plant PROTECTED AREA by a HOSTILE FORCE	HA4.1	INTRUSION into the PROTECTED AREA by a HOSTILE FORCE
Site Specific Justifications	*EAL* – None *Basis* – The following wording was added to the basis section as justification for the areas selected and does not alter the meaning or intent of the EAL "The Physical Security Plan identifies numerous events/conditions that constitute a threat/compromise to station security. Only those events that involve actual or potential substantial degradation to the level of safety of the plant need to be considered"		
Difference	▪ The word "plant" was not included as this is described by the phrase "Protected Area" ▪ This change is not a deviation because it does not alter the meaning or intent, such that classification of the event could be different between the NEI guidance and the plant EAL		
Deviation	None		

NEI IC#	NEI IC Wording	PBNP IC#(s)	PBNP IC Wording
HA4	Confirmed Security Event in a Plant PROTECTED AREA	HA4	Confirmed Security Event in a Plant PROTECTED AREA
Mode App.	All		All
Site Specific Justifications	None		
Difference	None		
Deviation	None		

NEI EAL#	NEI EAL Wording	PBNP EAL#(s)	PBNP EAL Wording
2	Other security events as determined from (site-specific) Safeguards Contingency Plan and reported by the (site-specific) security shift supervision	HA4.2	Security Shift Supervisor reports any of the following a. Sabotage device discovered in the PROTECTED AREA b. Standoff attack on the site Protected Area by a HOSTILE FORCE (i.e., Sniper) c. ANY security event of increasing severity that persists for GREATER THAN 30 minutes ▪ Credible bomb threats ▪ Extortion ▪ Suspicious fire or explosion ▪ Significant Security System Hardware Failure ▪ Loss of Guard Post Contact
Site Specific Justifications	*EAL* – "Sabotage device discovered in the Protected Area, Standoff attack on the Protected Area by a hostile force (i.e., Sniper), ANY security event of increasing severity that persists for GREATER THAN 30 minutes, Credible bomb threats, Extortion, Suspicious fire or explosion, Significant Security System Hardware Failure, Loss of Guard Post Contact" – is the site specific list of security events *Basis* - None		
Difference	• Generic differences # 6 for "GREATER THAN" and # 16 for "site-specific" apply. • These changes are not a deviation because they do not alter the meaning or intent, such that classification of the event could be different between the NEI guidance and the plant EAL		
Deviation	None		

NEI IC#	NEI IC Wording	PBNP IC#(s)	PBNP IC Wording
HA5	Control Room Evacuation Has Been Initiated	HA5	Control Room Evacuation Has Been Initiated
Mode App.	All		All
Site Specific Justifications	None		
Difference	None		
Deviation	None		

NEI EAL#	NEI EAL Wording	PBNP EAL#(s)	PBNP EAL Wording
1	Entry into (site-specific) procedure for control room evacuation	HA5.1	Entry into AOP-10 Control Room Inaccessibility for Control Room Evacuation
Site Specific Justifications	*EAL* - "AOP-10 Control Room Inaccessibility" is the site-specific procedure for control room evacuation. The AOP-10 series of procedures provide specific instructions for evacuating the Control Room/Building and establishing plant control in alternate locations. Inability to establish plant control from outside the control room will escalate this event to a Site Area Emergency. *Basis*- The following wording was added to the basis section as justification for the procedure selected and does not alter the meaning or intent of the EAL. "The AOP-10 series of procedures provide specific instructions for evacuating the Control Room/Building and establishing plant control in alternate locations"		
Difference	None		
Deviation	None		

NEI IC#	NEI IC Wording	PBNP IC#(s)	PBNP IC Wording
HA6	Other Conditions Existing Which in the Judgment of the Emergency Director Warrant Declaration of an Alert	HA6	Other Conditions Existing Which in the Judgment of the Emergency Director Warrant Declaration of an Alert
Mode App.	All		All
Site Specific Justifications	None		
Difference	None		
Deviation	None		

NEI EAL#	NEI EAL Wording	PBNP EAL#(s)	PBNP EAL Wording
1	Other conditions exist which in the judgment of the Emergency Director indicate that events are in process or have occurred which involve actual or likely potential substantial degradation of the level of safety of the plant. Any releases are expected to be limited to small fractions of the EPA Protective Action Guideline exposure levels	HA6.1	Other conditions exist which in the judgment of the Emergency Director indicate that events are in process or have occurred which involve actual or likely potential substantial degradation of the level of safety of the plant. Any releases are expected to be limited to small fractions of the EPA Protective Action Guideline exposure levels
Site Specific Justifications	*EAL* – None *Basis* - None		
Difference	None		
Deviation	None		

NEI IC#	NEI IC Wording	PBNP IC#(s)	PBNP IC Wording
HS1	Confirmed Security Event in a Plant VITAL AREA	HS1	Confirmed Security Event in a Plant VITAL AREA
Mode App.	All		All
Site Specific Justifications	None		
Difference	None		
Deviation	None		

NEI EAL#	NEI EAL Wording	PBNP EAL#(s)	PBNP EAL Wording
1	INTRUSION into the plant VITAL AREA by a HOSTILE FORCE	HS1.1	INTRUSION into a plant VITAL AREA by a HOSTILE FORCE
Site Specific Justifications	*EAL* - None *Basis* - None		
Difference	None		
Deviation	None		

NEI IC#	NEI IC Wording	PBNP IC#(s)	PBNP IC Wording
HS1	Confirmed Security Event in a Plant VITAL AREA	HS1	Confirmed Security Event in a Plant VITAL AREA
Mode App.	All		All
Site Specific Justifications	None		
Difference	None		
Deviation	None		

NEI EAL#	NEI EAL Wording	PBNP EAL#(s)	PBNP EAL Wording
2	Other security events as determined from (site-specific) Safeguards Contingency Plan and reported by the (site-specific) security shift supervision	HS1.2	Security Supervision reports confirmed sabotage discovered in a VITAL AREA.
Site Specific Justifications	*EAL* - The "Security Supervision" was moved to the front of the EAL phrase to improve human performance *Basis* - None		
Difference	▪ Generic difference # 16 for "site-specific" applies. ▪ This change is not a deviation because it does not alter the meaning or intent, such that classification of the event could be different between the NEI guidance and the plant EAL		
Deviation	None		

NEI IC#	NEI IC Wording	PBNP IC#(s)	PBNP IC Wording
HS2	Control Room Evacuation Has Been Initiated and Plant Control Cannot Be Established	HS2	Control Room Evacuation Has Been Initiated and Plant Control Cannot be Established
Mode App.	All		All
Site Specific Justifications	None		
Difference	None		
Deviation	None		

NEI EAL#	NEI EAL Wording	PBNP EAL#(s)	PBNP EAL Wording
1	Control room evacuation has been initiated. **AND** Control of the plant cannot be established per (site-specific) procedure within (site-specific) minutes	HS2.1	Control Room evacuation has been initiated **AND** Control of the plant cannot be established per AOP-10A Safe Shutdown - Local Control within 15 minutes
Site Specific Justifications	*EAL* – • "AOP-10A Safe Shutdown - Local Control" is the site-specific procedure for control room evacuation • 15 minutes - The intent of the EAL is to establish control of important plant equipment and knowledge of important plant parameters in a timely manner and is based on the guidance provided in the NEI Basis Document. *Basis* – The following wording was added to the basis section as justification for the site specific procedure used and do njot alter the meaning or intent of the EAL. "The AOP-10 series of procedures provide specific instructions for evacuating the Control Room/Building and establishing plant control in alternate locations"		
Difference	None		
Deviation	None		

NEI IC#	NEI IC Wording	PBNP IC#(s)	PBNP IC Wording
HS3	Other Conditions Existing Which in the Judgment of the Emergency Director Warrant Declaration of Site Area Emergency	HS3	Other Conditions Existing Which in the Judgment of the Emergency Director Warrant Declaration of Site Area Emergency
Mode App.	All		All
Site Specific Justifications	None		
Difference	None		
Deviation	None		

NEI EAL#	NEI EAL Wording	PBNP EAL#(s)	PBNP EAL Wording
1	Other conditions exist which in the judgment of the Emergency Director indicate that events are in process or have occurred which involve actual or likely major failures of plant functions needed for protection of the public. Any releases are not expected to result in exposure levels which exceed EPA Protective Action Guideline exposure levels beyond the site boundary	HS3.1	Other conditions exist which in the judgment of the Emergency Director indicate that events are in process or have occurred which involve actual or likely major failures of plant functions needed for protection of the public. Any releases are not expected to result in exposure levels which exceed EPA Protective Action Guideline exposure levels beyond the site boundary
Site Specific Justifications	*EAL* – None *Basis* - None		
Difference	None		
Deviation	None		

NEI IC#	NEI IC Wording	PBNP IC#(s)	PBNP IC Wording
HG1	Security Event Resulting in Loss Of Physical Control of the Facility	HG1	Security Event Resulting in Loss of Physical Control of the Facility
Mode App.	All		All
Site Specific Justifications	None		
Difference	None		
Deviation	None		

NEI EAL#	NEI EAL Wording	PBNP EAL#(s)	PBNP EAL Wording
1	A HOSTILE FORCE has taken control of plant equipment such that plant personnel are unable to operate equipment required to maintain safety functions	HG1.1	An HOSTILE FORCE has taken control of plant equipment such that plant personnel are unable to operate equipment required to maintain safety functions as indicated by loss of physical control of **EITHER:** A VITAL AREA such that operation of equipment required for safe shutdown is lost **OR** Spent fuel pool cooling systems if imminent fuel damage is likely (e.g., freshly off loaded reactor core in the pool)
Site Specific Justifications	*EAL* - "A VITAL AREA such that operation of equipment required for safe shutdown is lost OR Spent fuel pool cooling systems if imminent fuel damage is likely" – site specific description of equipment required to maintain safety functions" wording was added to be consistent with the NEI basis document guidance. *Basis* - None		
Difference	• Generic difference # 9 for "**OR**" and # 13 for "**EITHER**" apply. • These changes are not a deviation because they do not alter the meaning or intent, such that classification of the event could be different between the NEI guidance and the plant EAL		
Deviation	None		

NEI IC#	NEI IC Wording	PBNP IC#(s)	PBNP IC Wording
HG2	Other Conditions Existing Which in the Judgment of the Emergency Director Warrant Declaration of General Emergency	HG2	Other Conditions Existing Which in the Judgment of the Emergency Director Warrant Declaration of General Emergency
Mode App.	All		All
Site Specific Justifications	None		
Difference	None		
Deviation	None		

NEI EAL#	NEI EAL Wording	PBNP EAL#(s)	PBNP EAL Wording
1	Other conditions exist which in the judgment of the Emergency Director indicate that events are in process or have occurred which involve actual or imminent substantial core degradation or melting with potential for loss of containment integrity. Releases can be reasonably expected to exceed EPA Protective Action Guideline exposure levels offsite for more than the immediate site area	HG2.1	Other conditions exist which in the judgment of the Emergency Director indicate that events are in process or have occurred which involve actual or imminent substantial core degradation or melting with potential for loss of containment integrity. Releases can be reasonably expected to exceed EPA Protective Action Guideline exposure levels offsite for more than the immediate site area
Site Specific Justifications	*EAL* – None *Basis* - None		
Difference	None		
Deviation	None		

SYSTEM MALFUNCTION

Site Specific
Information/Differences/Deviations
Justifications

NEI IC#	NEI IC Wording	PBNP IC#(s)	PBNP IC Wording
SU1	Loss of All Offsite Power to Essential Busses for Greater Than 15 Minutes	SU1	Loss of All Offsite Power to Essential Busses for GREATER THAN 15 Minutes
Mode App.	Power Operation, Startup, Hot Standby, Hot Shutdown		1- Power Operation, 2-Startup, 3-Hot Standby, 4-Hot Shutdown
Site Specific Justifications	None		
Difference	• Generic differences # 3 for "Unusual Event" and # 6 for "GREATER THAN" apply. • These changes are not a deviation because they do not alter the meaning or intent, such that classification of the event could be different between the NEI guidance and the plant EAL		
Deviation	None		

NEI EAL#	NEI EAL Wording	PBNP EAL#(s)	PBNP EAL Wording
1	Loss of power to (site-specific) transformers for greater than 15 minutes **AND** At least (site-specific) emergency generators are supplying power to emergency busses.	SU1.1	Loss of all offsite power to both safety-related 4160 VAC buses 1(2)-A05 and 1(2)-A06 for GREATER THAN 15 minutes **AND** At least 1 emergency generator is supplying power to an emergency bus
Site Specific Justifications	*EAL -* • safety related 4160 VAC buses 1(2) – A05 and 1(2) – A06" - The 4160 VAC system includes two safety-related (essential) buses per unit, 1(2)-A05 (A train) and 1(2)-A06 (B train). Offsite power from the 345 KVAC system is stepped down through the 13.8 KVAC system to the Low Voltage Station Auxiliary Transformer (LVSAT) 1(2)-X04. The LVSATs provide power to 4160 VAC switching buses 1(2)-A03 and 1(2)-A04, which in turn provide power to safety-related buses 1(2)-A05 and 1(2)-A06. ▪ "1 emergency generator" - During emergency or abnormal situations, the 4160 VAC system is supplied by emergency diesel generators (G01 through G04) or the gas turbine generator (G05). Following a loss of power, ECA 0.0 provides guidance to restore power to any 4160 VAC safety-related bus. *Basis –* ▪ The words "The 4160 VAC system includes two safety-related (essential) buses per unit, 1(2)-A05 (A train) and 1(2)-A06 (B train). Offsite power from the 345 KVAC system is stepped down through the 13.8 KVAC system to the Low Voltage Station Auxiliary Transformer (LVSAT) 1(2)-X04. The LVSATs provide power to 4160 VAC switching buses 1(2)-A03 and 1(2)-A04, which in turn provide power to safety-related buses 1(2)-A05 and 1(2)-A06." were added as justification for selection of these busses for this EAL. ▪ The words "During emergency or abnormal situations, the 4160 VAC system is supplied by emergency diesel generators (G01 through G04) or the gas turbine generator (G05). Following a loss of power, ECA 0.0 provides guidance to restore power to any 4160 VAC safety-related bus. For the purpose of classification under this EAL, offsite power sources include any of the following ▪ 345 KVAC system supplying power to the 13.8 KVAC system and the unit		

	LVSATs ▪ 345 KVAC system supplying power to the 13.8 KVAC system and the unit LVSATs Backfeeding power to the UATs through the 19 KVAC system and the # 3 for "Unusual Event", main step-up transformer X-01. Note that the time required to effect the backfeed is likely longer than the fifteen-minute interval. If off-normal plant conditions have already established the backfeed, however, its power to the safety-related buses may be considered an offsite power source." were added as justification for sources of off site power.
Difference	▪ Generic differences # 3 for "Unusual Event", # 6 for "GREATER THAN", and # 15 for "offsite" apply ▪ The NEI example EAL condition "Loss of power to (site-specific) transformers for greater than 15 minutes" has been changed to "Loss of offsite power to both safety-related...buses...for GREATER THAN 15 min." The PBNP wording focuses the classification on the loss of offsite power capability rather than the status of one or more transformers that may or may not be capable of powering the essential buses. Due to the nature of the off site power sources through two onsite transformers, it would be possible to maintain power to the transformers and lose power to the buses which would result in loss of offsite power, yet, under the NEI wording and event would not be classified as long as there was power to the transformers. In order to ensure a classification is made in accordance with the NEI Basis, loss of power to the busses was used in the EAL wording ▪ These changes are not a deviation because they do not alter the meaning or intent, such that classification of the event could be different between the NEI guidance and the plant EAL
Deviation	None

NEI IC#	NEI IC Wording	PBNP IC#(s)	PBNP IC Wording
SU2	Inability to Reach Required Shutdown Within Technical Specification Limits	SU2	Inability to Reach Required Shutdown Within Technical Specification Limits
Mode App.	Power Operation, Startup, Hot Standby, Hot Shutdown		1- Power Operation, 2-Startup, 3-Hot Standby, 4-Hot Shutdown
Site Specific Justifications	None		
Difference	▪ Generic difference # 3 for "Unusual Event" applies. ▪ This change is not a deviation because it does not alter the meaning or intent, such that classification of the event could be different between the NEI guidance and the plant EAL		
Deviation	None		

NEI EAL#	NEI EAL Wording	PBNP EAL#(s)	PBNP EAL Wording
1	Plant is not brought to required operating mode within (site-specific) Technical Specifications LCO Action Statement Time	SU2.1	Plant is not brought to required operating mode within Technical Specifications LCO action statement time.
Site Specific Justifications	*EAL* – None *Basis* - None		
Difference	▪ Generic difference # 3 for "Unusual Event" applies. ▪ This change is not a deviation because it does not alter the meaning or intent, such that classification of the event could be different between the NEI guidance and the plant EAL		
Deviation	None		

NEI IC#	NEI IC Wording	PBNP IC#(s)	PBNP IC Wording
SU3	UNPLANNED Loss of Most or All Safety System Annunciation or Indication in The Control Room for Greater Than 15 Minutes	SU3	UNPLANNED Loss of Most or All Safety System Annunciation or Indication in the Control Room for GREATER THAN 15 Minutes
Mode App.	Power Operation, Startup, Hot Standby, Hot Shutdown		1- Power Operation, 2-Startup, 3-Hot Standby, 4-Hot Shutdown
Site Specific Justifications	None		
Difference	• Generic difference # 6 "GREATER THAN" applies. • This change is not a deviation because it does not alter the meaning or intent, such that classification of the event could be different between the NEI guidance and the plant EAL		
Deviation	None		

NEI EAL#	NEI EAL Wording	PBNP EAL#(s)	PBNP EAL Wording
1	UNPLANNED loss of most or all (site-specific) annunciators or indicators associated with safety systems for greater than 15 minutes	SU3.1	UNPLANNED loss of most or all annunciators or indicators associated with the following safety systems for GREATER THAN 15 minutes • ECCS • Containment Isolation • Reactor Trip • Process or Effluent Radiation Monitors • Electrical Distribution/Diesel Generators
Site Specific Justifications	*EAL* – The specified annunciators or indicators for this EAL include those identified in the Abnormal Operating Procedures, in the Emergency Operating Procedures, and in other EALs (e.g., area, process, and/or effluent rad monitors, etc *Basis* – None		
Difference	▪ Generic differences # 3 for "Unusual Event", # 6 for "GREATER THAN", and # 16 for "site-specific" apply. ▪ These changes are not a deviation because they do not alter the meaning or intent, such that classification of the event could be different between the NEI guidance and the plant EAL		
Deviation	None		

NEI IC#	NEI IC Wording	PBNP IC#(s)	PBNP IC Wording
SU4	Fuel Clad Degradation	SU4	Fuel Clad Degradation
Mode App.	Power Operation, Startup, Hot Standby, Hot Shutdown		1- Power Operation, 2-Startup, 3-Hot Standby, 4-Hot Shutdown
Site Specific Justifications	None		
Difference	▪ Generic difference # 3 for "Unusual Event" applies. ▪ This change is not a deviation because it does not alter the meaning or intent, such that classification of the event could be different between the NEI guidance and the plant EAL		
Deviation	None		

NEI EAL#	NEI EAL Wording	PBNP EAL#(s)	PBNP EAL Wording
1	(Site-specific) radiation monitor readings indicating fuel clad degradation greater than Technical Specification allowable limits	SU4.1	Failed Fuel Monitor (RE-109) GREATER THAN 750 mR/hr indicating fuel clad degradation
Site Specific Justifications	*EAL* - ▪ Failed Fuel Monitor (RE-109) - Under the specified operating modes the failed fuel monitor value represents clad degradation greater than Technical Specification allowable limits as described in the basis ▪ 750 mR/hr – this value describes the site specific technical specification allowable limit. (Ref. Calc 2004-0008 *Basis* – The following wording was added to the basis section s a justification for the rad level selected and does not alter the meaning or intent of the EAL. "750 mR/hr is the value that corresponds to approximately 0.1% fuel clad damage."		
Difference	• Generic difference # 3 for "Unusual Event" and # 6 for "GREATER THAN" apply • These changes are not a deviation because they do not alter the meaning or intent, such that classification of the event could be different between the NEI guidance and the plant EAL		
Deviation	None		

NEI IC#	NEI IC Wording	PBNP IC#(s)	PBNP IC Wording
SU4	Fuel Clad Degradation	SU4	Fuel Clad Degradation
Mode App.	Power Operation, Startup, Hot Standby, Hot Shutdown		1- Power Operation, 2-Startup, 3-Hot Standby, 4-Hot Shutdown
Site Specific Justifications	None		
Difference	▪ Generic difference # 3 for "Unusual Event" applies. ▪ This change is not a deviation because it does not alter the meaning or intent, such that classification of the event could be different between the NEI guidance and the plant EAL		
Deviation	None		

NEI EAL#	NEI EAL Wording	PBNP EAL#(s)	PBNP EAL Wording
2	(Site-specific) coolant sample activity value indicating fuel clad degradation greater than Technical Specification allowable limits.	SU4.2	Coolant sample activity GREATER THAN 50 µCi/gm dose equivalent I-131indicating fuel clad degradation
Site Specific Justifications	*EAL* - Coolant sample activity GREATER THAN 50 µCi/gm dose equivalent I-131indicating fuel clad degradation. (TS 3.4.16), Calc 2004-0008 *Basis* - None		
Difference	▪ Generic differences # 3 for "Unusual Event", # 6 for "GREATER THAN", and # 16 for "site-specific" apply. ▪ "technical specification allowable limits" – was deleted as it duplicates the site specific tech spec value already listed in the EAL ▪ These changes are not a deviation because they do not alter the meaning or intent, such that classification of the event could be different between the NEI guidance and the plant EAL		
Deviation	None		

NEI IC#	NEI IC Wording	PBNP IC#(s)	PBNP IC Wording
SU5	RCS Leakage	SU5	RCS Leakage
Mode App.	Power Operation, Startup, Hot Standby, Hot Shutdown		1- Power Operation, 2-Startup, 3-Hot Standby, 4-Hot Shutdown
Site Specific Justifications	None		
Difference	▪ Generic difference # 3 for "Unusual Event" applies. ▪ This change is not a deviation because it does not alter the meaning or intent, such that classification of the event could be different between the NEI guidance and the plant EAL		
Deviation	None		

NEI EAL#	NEI EAL Wording	PBNP EAL#(s)	PBNP EAL Wording
1	Unidentified or pressure boundary leakage greater than 10 gpm	SU5.1	Unidentified or pressure boundary leakage GREATER THAN 10 gpm
Site Specific Justifications	*EAL* – None *Basis* - None		
Difference	• Generic differences # 3 for "Unusual Event" and # 6 for "GREATER THAN" apply • These changes are not a deviation because they do not alter the meaning or intent, such that classification of the event could be different between the NEI guidance and the plant EAL		
Deviation	None		

NEI IC#	NEI IC Wording	PBNP IC#(s)	PBNP IC Wording
SU5	RCS Leakage	SU5	RCS Leakage
Mode App.	Power Operation, Startup, Hot Standby, Hot Shutdown		1- Power Operation, 2-Startup, 3-Hot Standby, 4-Hot Shutdown
Site Specific Justifications	None		
Difference	▪ Generic difference # 3 for "Unusual Event" applies. ▪ This change is not a deviation because it does not alter the meaning or intent, such that classification of the event could be different between the NEI guidance and the plant EAL		
Deviation	None		

NEI EAL#	NEI EAL Wording	PBNP EAL#(s)	PBNP EAL Wording
2	Identified leakage greater than 25 gpm	SU5.2	Identified leakage GREATER THAN 25 gpm
Site Specific Justifications	*EAL* – None *Basis* - None		
Difference	• Generic differences # 3 for "Unusual Event" and # 6 for "GREATER THAN" apply • These changes are not a deviation because they do not alter the meaning or intent, such that classification of the event could be different between the NEI guidance and the plant EAL		
Deviation	None		

NEI IC#	NEI IC Wording	PBNP IC#(s)	PBNP IC Wording
SU6	UNPLANNED Loss of All Onsite or Offsite Communications Capabilities	SU6.	UNPLANNED Loss of All Onsite or Offsite Communications Capabilities
Mode App.	Power Operation, Startup, Hot Standby, Hot Shutdown		1- Power Operation, 2-Startup, 3-Hot Standby, 4-Hot Shutdown
Site Specific Justifications	None		
Difference	▪ Generic difference # 3 for "Unusual Event" applies. ▪ This change is not a deviation because it does not alter the meaning or intent, such that classification of the event could be different between the NEI guidance and the plant EAL		
Deviation	None		

NEI EAL#	NEI EAL Wording	PBNP EAL#(s)	PBNP EAL Wording
1	Loss of all (site-specific list) onsite communications capability affecting the ability to perform routine operations	SU6.1	Loss of all Table C-1 onsite communications capability affecting the ability to perform routine operations **Table C-1 Onsite Communications Systems** • Plant Public Address System • Security Radio • Commercial Phone System • Portable radios • Sound power phones
Site Specific Justifications	*EAL* - The example EALs specifies a list site-specific onsite and offsite communications methods. The PBNP EAL lists these methods in the basis discussion of the EAL, and specifies in the EAL wording the reasons onsite and offsite communication losses are important (i.e., perform routine operations and convey problems to offsite personnel). The reasons are obtained directly from the basis of the NEI example EALs. Due to the prevalence of communications systems that were not common-place when the NEI example EALs were drafted (e.g., cellular phones, internet communications, etc.), there are many options available to maintain the lines of communication open. The PBNP EAL wording recognizes this situation while maintaining the intent of the NEI example EALs. *Basis* - None		
Difference	▪ Generic differences # 3 for "Unusual Event" and # 16 for "site-specific" apply. ▪ These changes are not a deviation because they do not alter the meaning or intent, such that classification of the event could be different between the NEI guidance and the plant EAL		
Deviation	None		

NEI IC#	NEI IC Wording	PBNP IC#(s)	PBNP IC Wording
SU6	UNPLANNED Loss of All Onsite or Offsite Communications Capabilities	SU6.	UNPLANNED Loss of All Onsite or Offsite Communications Capabilities
Mode App.	Power Operation, Startup, Hot Standby, Hot Shutdown		1- Power Operation, 2-Startup, 3-Hot Standby, 4-Hot Shutdown
Site Specific Justifications	None		
Difference	▪ Generic difference # 3 for "Unusual Event" applies. ▪ This change is not a deviation because it does not alter the meaning or intent, such that classification of the event could be different between the NEI guidance and the plant EAL		
Deviation	None		

NEI EAL#	NEI EAL Wording	PBNP EAL#(s)	PBNP EAL Wording
2	Loss of all (site-specific list) offsite communications capability	SU6.2	Loss of all Table C-2 offsite communications capability **Table C-2 Offsite Communications Systems** • Emergency Notification System (ENS) • Health Physics Network (HPN) • Operations Control Counterpart Link (OCCL) • Management Counterpart Link (MCL) • Protective Measures Counterpart Link (PMCL) • Reactor Safety Counterpart Link (RSCL) • Nuclear Accident Reporting System (NARS) • Commercial Phone System • General Telephone Lines • Manitowoc County Sheriff's Department Radio
Site Specific Justifications	*EAL* - Table C-2. lists these methods in the basis discussion of the EAL, and specifies in the EAL wording the reasons onsite and offsite communication losses are important (i.e., perform routine operations and convey problems to offsite personnel). The reasons are obtained directly from the basis of the NEI example EALs. Due to the prevalence of communications systems that were not common-place when the NEI example EALs were drafted (e.g., cellular phones, internet communications, etc.), there are many options available to maintain the lines of communication open. The PBNP EAL wording recognizes this situation while maintaining the intent of the NEI example EALs. *Basis* - None		
Difference	▪ Generic differences # 3 for "Unusual Event" and # 16 for "site-specific" apply. ▪ These changes are not a deviation because they do not alter the meaning or intent, such that classification of the event could be different between the NEI guidance and the plant EAL		
Deviation	None		

NEI IC#	NEI IC Wording	PBNP IC#(s)	PBNP IC Wording
SU8	Inadvertent Criticality	SU8	Inadvertent Criticality
Mode App.	Hot Standby, Hot Shutdown		3-Hot Standby, 4-Hot Shutdown
Site Specific Justifications	None		
Difference	▪ Generic difference # 3 for "Unusual Event" applies. ▪ This change is not a deviation because it does not alter the meaning or intent, such that classification of the event could be different between the NEI guidance and the plant EAL		
Deviation	None		

NEI EAL#	NEI EAL Wording	PBNP EAL#(s)	PBNP EAL Wording
2	An UNPLANNED sustained positive startup rate observed on nuclear instrumentation	SU8.1	An UNPLANNED sustained positive startup rate observed on nuclear instrumentation.
Site Specific Justifications	*EAL* – None *Basis* – The following wording was added as clarification for the Operator and does not alter the meaning or intent of the EAL. ▪ "This condition can be identified using startup rate monitors (1(2)NI-31D/32D - Source Range Startup Rate, and 1(2)NI-35D/36D - Intermediate Range Startup Rate) [Ref. 1]." ▪ "Note: This EAL is SU8 following SU6. SU7 is not used in NEI 99-01 Revision 4 and that convention is carried forward here"		
Difference	▪ Generic difference # 3 for "Unusual Event" applies. ▪ This change is not a deviation because it does not alter the meaning or intent, such that classification of the event could be different between the NEI guidance and the plant EAL		
Deviation	None		

NEI IC#	NEI IC Wording	PBNP IC#(s)	PBNP IC Wording
SA2	Failure of Reactor Protection System Instrumentation to Complete or Initiate an Automatic Reactor Scram Once a Reactor Protection System Setpoint Has Been Exceeded and Manual Scram Was Successful	SA2	Failure of Reactor Protection System Instrumentation to Complete or Initiate an Automatic Reactor Trip Once a Reactor Protection System Setpoint Has Been Exceeded and Manual Scram Was Successful
Mode App.	Power Operation, Startup, Hot Standby,		1- Power Operation, 2-Startup, 3-Hot Standby
Site Specific Justifications	None		
Difference	• Generic difference # 10 for "trip" applies. • This change is not a deviation because it does not alter the meaning or intent, such that classification of the event could be different between the NEI guidance and the plant EAL		
Deviation	None		

NEI EAL#	NEI EAL Wording	PBNP EAL#(s)	PBNP EAL Wording
1	Indication(s) exist that indicate that reactor protection system setpoint was exceeded and automatic scram did not occur, and a successful manual scram occurred	SA2.1	Indication(s) exist that a Reactor Protection System (RPS) setpoint was exceeded **AND** RPS automatic trip did <u>NOT</u> occur **AND** Any of the following actions <u>are</u> successful in reducing power to LESS THAN 5% ▪ Use of Reactor Trip buttons ▪ Deenergizing 1(2)B01 and 1(2)B02
Site Specific Justifications	*EAL* - ▪ In response to industry questions concerning the definition of a successful reactor trip, NEI and the NRC agreed in System Malfunction Question #7 of "Methodology for Development of Emergency Action Levels NUMARC/NESP-007 Rev. 2 Questions and Answers" that "...the scram is considered unsuccessful when enough control rods have not inserted to cause the reactor power to fall below that percent power associated with the ability of the safety systems to remove heat and continue to decrease." To implement the intent of this position, the PBNP EAL wording includes the phrase "...power range <5%." Reactor power levels at or above 5% (in a core that is supposed to be shutdown) are considered an extreme challenge to the Fuel Cladding barrier and warrant a Critical Safety Function Status Tree (CSFST) RED priority. The setpoint has been chosen because it is clearly readable on the power range meters. Reactor power levels in the power range are indicated on N-41, 42, 43 and 44. ▪ Use of Reactor Trip buttons / Deenergizing 1(2)B01 or 1(2)B02 [Ref.CSP-S.1 and EOP 0, Reactor Trip Safety Injection] *Basis* - None		
Difference	• Generic differences # 8 for "LESS THAN", # 10 for "trip" and # 11 for "AND" apply. • These changes are not a deviation because they do not alter the meaning or intent, such that classification of the event could be different between the NEI guidance and the plant EAL		

Deviation	None

NEI IC#	NEI IC Wording	PBNP IC#(s)	PBNP IC Wording
SA4	UNPLANNED Loss of Most or All Safety System Annunciation or Indication in Control Room With Either (1) a SIGNIFICANT TRANSIENT in Progress, or (2) Compensatory Non-Alarming Indicators are Unavailable	SA4	UNPLANNED Loss of Most or All Safety System Annunciation or Indication in Control Room With Either (1) a SIGNIFICANT TRANSIENT in Progress, or (2) Compensatory Non-Alarming Indicators are Unavailable
Mode App.	Power Operation, Startup, Hot Standby, Hot Shutdown		1- Power Operation, 2-Startup, 3-Hot Standby, 4-Hot Shutdown
Site Specific Justifications	None		
Difference	None		
Deviation	None		

NEI EAL#	NEI EAL Wording	PBNP EAL#(s)	PBNP EAL Wording
1	UNPLANNED loss of most or all (site-specific) annunciators or indicators associated with safety systems for greater than 15 minutes. **AND** Either of the following: (a or b) a. A SIGNIFICANT TRANSIENT is in progress. **OR** b. Compensatory non-alarming indications are unavailable.	SA4.1	UNPLANNED loss of most or all annunciators or indicators associated with the following safety systems for GREATER THAN 15 minutes • ECCS • Containment Isolation • Reactor Trip • Process or Effluent Radiation Monitors • Electrical Distribution/Diesel Generators **AND** Either of the following: (a or b): a. A SIGNIFICANT TRANSIENT is in progress **OR** b. Compensatory non-alarming indications are unavailable
Site Specific Justifications	*EAL* – The specified annunciators or indicators for this EAL include those identified in the Abnormal Operating Procedures, in the Emergency Operating Procedures, and in other EALs (e.g., area, process, and/or effluent rad monitors, etc *Basis* – The following wording was added to the basis section to provide clarification to the Operator and do not alter the meaning or intent of the EAL ▪ "SIGNIFICANT TRANSIENT includes response to automatic or manually initiated functions such as trips, runbacks involving greater than 25% thermal power change, ECCS injections, or thermal power oscillations of 10% or greater." ▪ "Note: This EAL is SA4 following SA2. SA2 is not used in NEI 99-01 Revision 4 and that		

	convention is carried forward here."
Difference	• Generic differences # 6 for "GREATER THAN" and # 16 for "site-specific" apply. • These changes are not a deviation because they do not alter the meaning or intent, such that classification of the event could be different between the NEI guidance and the plant EAL
Deviation	None

NEI IC#	NEI IC Wording	PBNP IC#(s)	PBNP IC Wording
SA5	AC power capability to essential busses reduced to a single power source for greater than 15 minutes such that any additional single failure would result in station blackout	SA5	AC power capability to essential busses reduced to a single power source for GREATER THAN 15 minutes such that any additional single failure would result in station blackout
Mode App.	Power Operation, Startup, Hot Standby, Hot Shutdown		1- Power Operation, 2-Startup, 3-Hot Standby, 4-Hot Shutdown
Site Specific Justifications	None		
Difference	• Generic difference # 6 for "GREATER THAN" applies. • This change is not a deviation because it does not alter the meaning or intent, such that classification of the event could be different between the NEI guidance and the plant EAL		
Deviation	None		

NEI EAL#	NEI EAL Wording	PBNP EAL#(s)	PBNP EAL Wording
1	AC power capability to site-specific essential busses reduced to a single power source for greater than 15 minutes **AND** Any additional single failure will result in station blackout	SA5.1	AC power capability to safety-related 4160 VAC buses 1(2)-A05 and 1(2)-A06 reduced to only one of the following sources for GREATER THAN 15 minutes o A single emergency diesel generator (G01, G02, G03 or G04) o LVSAT 1(2)-X04 o Cross-tying with the opposite unit power supply **AND** Any additional single failure will result in station blackout.
Site Specific Justifications	*EAL* - ▪ "safety-related 4160 VAC buses 1(2)-A05 and 1(2)-A06" are the site-specific essential buses. (Ref. DBD-22, 4160 VAC System) ▪ A single emergency diesel generator (G01, G02, G03 or G04), LVSAT 1(2)-X04, Cross-tying with the opposite unit power supply" – (Ref FSAR Section 8, Electrical Systems) ▪ Offsite power sources include the four 345 KVAC lines (111, 121, Q303 and 151) through the 13.8 KVAC system to the LVSAT and 345 KVAC backfed through the 19 KVAC system to the UAT. Note that the time required to effect a backfeed to the UAT is likely longer than the fifteen-minute interval. If off-normal plant conditions have already established the backfeed, however, its power to the safety-related buses may be considered an offsite power source. Onsite power sources consist of the emergency diesel generators, the gas turbine generator (G05) feeding the 13.8 KVAC system to the LVSATs, the unit main turbine generator, and power supplied from the opposite unit. *Basis* – The following wording was added to the basis section as justification for the site specific power sources listed and does not alter the meaning or intent of the EAL ▪ Offsite power sources include the four 345 KVAC lines (111, 121, Q303 and 151) through		

	the 13.8 KVAC system to the LVSAT and 345 KVAC backfed through the 19 KVAC system to the UAT. Note that the time required to effect a backfeed to the UAT is likely longer than the fifteen-minute interval. If off-normal plant conditions have already established the backfeed, however, its power to the safety-related buses may be considered an offsite power source. Onsite power sources consist of the emergency diesel generators, the gas turbine generator (G05) feeding the 13.8 KVAC system to the LVSATs, the unit main turbine generator, and power supplied from the opposite unit. Several combinations of power failures could therefore satisfy this EAL
Difference	• Generic difference # 6 for "GREATER THAN" applies. • This change is not a deviation because it does not alter the meaning or intent, such that classification of the event could be different between the NEI guidance and the plant EAL
Deviation	None

NEI IC#	NEI IC Wording	PBNP IC#(s)	PBNP IC Wording
SS1	Loss of All Offsite Power and Loss of All Onsite AC Power to Essential Busses	SS1	Loss of All Offsite Power and Loss of All Onsite AC Power to Essential Busses
Mode App.	Power Operation, Startup, Hot Standby, Hot Shutdown		1- Power Operation, 2-Startup, 3-Hot Standby, 4-Hot Shutdown
Site Specific Justifications	None		
Difference	None		
Deviation	None		

NEI EAL#	NEI EAL Wording	PBNP EAL#(s)	PBNP EAL Wording
1	Loss of power to (site-specific) transformers. **AND** Failure of (site-specific) emergency generators to supply power to emergency busses. **AND** Failure to restore power to at least one emergency bus within (site-specific) minutes from the time of loss of both offsite and onsite AC power	SS1.1	Loss of all offsite AC power to both safety-related 4160 VAC buses 1(2)-A05 and 1(2)-A06 **AND** Failure of all emergency generators to supply power to safety related 4160 VAC buses **AND** Failure to restore power to at least one safety-related 4160 VAC bus within 15 minutes from the time of loss of both offsite and onsite AC power.
Site Specific Justifications	*EAL* - ▪ safety-related 4160 VAC buses 1(2)-A05 and 1(2)-A06 - Offsite power sources include the four 345 KVAC lines (111, 121, Q303 and 151) through the 13.8 KVAC system to the LVSAT and 345 KVAC backfed through the 19 KVAC system to the UAT. (Ref. DBD-22, 4160 VAC System) ▪ 15 minutes - The time required to effect a backfeed to the UAT is likely longer than the fifteen-minute interval. If off-normal plant conditions have already established the backfeed, however, its power to the safety-related buses may be considered an offsite power source. Onsite power sources consist of the emergency diesel generators, the gas turbine generator (G05) feeding the 13.8 KVAC system to the LVSATs, the unit main turbine generator, and power supplied from the opposite unit. *Basis* – The following information was added to the basis section as justification for selection of off site power sources and does not alter the meaning or intent of the EAL. ▪ Offsite power sources include the four 345 KVAC lines (111, 121, Q303 and 151) through the 13.8 KVAC system to the LVSAT and 345 KVAC backfed through the 19 KVAC system to the UAT. Note that the time required to effect a backfeed to the UAT is likely longer than the fifteen-minute interval. If off-normal plant conditions have already established the backfeed, however, its power to the safety-related buses may be considered an offsite power source. Onsite power sources consist of the emergency diesel generators,		

	the gas turbine generator (G05) feeding the 13.8 KVAC system to the LVSATs, the unit main turbine generator, and power supplied from the opposite unit.
Difference	▪ The NEI example EAL condition "Loss of power to (site-specific) transformers for greater than 15 minutes" has been changed to "Loss of offsite power to both safety-related...buses...for GREATER THAN 15 min." The PBNP wording focuses the classification on the loss of offsite power capability rather than the status of one or more transformers that may or may not be capable of powering the essential buses. Due to the nature of the off site power sources through two onsite transformers, it would be possible to maintain power to the transformers and lose power to the buses which would result in loss of offsite power, yet, under the NEI wording and event would not be classified as long as there was power to the transformers. In order to ensure a classification is made in accordance with the NEI Basis, loss of power to the busses was used in the EAL wording. ▪ These changes are not a deviation because they do not alter the meaning or intent, such that classification of the event could be different between the NEI guidance and the plant EAL
Deviation	None

NEI IC#	NEI IC Wording	PBNP IC#(s)	PBNP IC Wording
SS2	Failure of Reactor Protection System Instrumentation to Complete or Initiate an Automatic Reactor Scram Once a Reactor Protection System Setpoint Has Been Exceeded and Manual Scram Was NOT Successful	SS2	Failure of Reactor Protection System Instrumentation to Complete or Initiate an Automatic Reactor Trip Once a Reactor Protection System Setpoint Has Been Exceeded and Manual Trip Was NOT Successful
Mode App.	Power Operation, Startup		1- Power Operation, 2-Startup
Site Specific Justifications	None		
Difference	• Generic difference # 10 for "trip" applies. • This change is not a deviation because it does not alter the meaning or intent, such that classification of the event could be different between the NEI guidance and the plant EAL		
Deviation	None		

NEI EAL#	NEI EAL Wording	PBNP EAL#(s)	PBNP EAL Wording
1	Indication(s) exist that automatic and manual scram were not successful	SS2.1	Indication(s) exist that automatic <u>and</u> manual trip were NOT successful in reducing power to LESS THAN 5%
Site Specific Justifications	*EAL* – ▪ "in reducing power to LESS THAN 5%" - In response to industry questions concerning the definition of a successful reactor trip, NEI and the NRC agreed in System Malfunction Question #7 of "Methodology for Development of Emergency Action Levels NUMARC/NESP-007 Rev. 2 Questions and Answers" that "...the scram is considered unsuccessful when enough control rods have not inserted to cause the reactor power to fall below that percent power associated with the ability of the safety systems to remove heat and continue to decrease." 5% is the power level specified in Subcriticality-RED path. *Basis* – The following wording was added to the basis section to provide a definition of "successful automatic or manual reactor trip" ▪ Automatic or manual reactor trip is considered successful if actions taken at the main control panels (use of reactor trip buttons, de-energizing 1(2)B01 and 1(2)B02) result in reducing reactor power less than 5%.		
Difference	• Generic difference # 10 for "trip" and # 14 for "NOT" apply. • These changes are not a deviation because they do not alter the meaning or intent, such that classification of the event could be different between the NEI guidance and the plant EAL		
Deviation	None		

NEI IC#	NEI IC Wording	PBNP IC#(s)	PBNP IC Wording
SS3	Loss of All Vital DC Power	SS3	Loss of All Vital DC Power
Mode App.	Power Operation, Startup, Hot Standby, Hot Shutdown		1- Power Operation, 2-Startup, 3-Hot Standby, 4-Hot Shutdown
Site Specific Justifications	None		
Difference	None		
Deviation	None		

NEI EAL#	NEI EAL Wording	PBNP EAL#(s)	PBNP EAL Wording
1	Loss of All Vital DC Power based on (site-specific) bus voltage indications for greater than 15 minutes	SS3.1	Loss of all Vital DC power based on LESS THAN 115 VDC on 125 VDC buses D-01, D-02, D-03 and D-04 for GREATER THAN 15 minutes
Site Specific Justifications	*EAL* – ▪ "LESS THAN 115 VDC on 125 VDC buses D-01, D-02, D-03 and D-04 for GREATER THAN 15 minutes" – The safety-related station batteries have been sized to carry their expected shutdown loads following a plant trip/LOCA and loss of offsite power or following a station blackout for a period of one hour without battery terminal voltage falling below the minimum bus voltages required for equipment operation. The bus voltage for full operability at all connected loads varies and is specific for each bus. At 115 VDC loss of equipment function would begin to occur. 105 VDC was not selected because it is the voltage of a completely discharged battery. *Basis* – The following wording was added to the basis section as justification for the site specific bus voltage indications and does not alter the meaning or intent of the EAL ▪ The safety-related station batteries have been sized to carry their expected shutdown loads following a plant trip/LOCA and loss of offsite power or following a station blackout for a period of one hour without battery terminal voltage falling below the minimum bus voltages required for equipment operation. The bus voltage for full operability at all connected loads varies and is specific for each bus. At 115 VDC loss of equipment function would begin to occur. 105 VDC was not selected because it is the voltage of a completely discharged battery. By the time the bus voltage has degraded to below 105 VDC, the ability to monitor and control important plant safety functions would be severely compromised. 115 VDC represents a value at which some plant functions would begin to be lost. 115 VDC is below the minimum normal operating voltage, to preclude entering this EAL due to normal operational situations.		
Difference	• Generic differences # 6 for "GREATER THAN" and # 8 for "LESS THAN" apply. • These changes are not a deviation because they do not alter the meaning or intent, such that classification of the event could be different between the NEI guidance and the plant EAL		
Deviation	None		

NEI IC#	NEI IC Wording	PBNP IC#(s)	PBNP IC Wording
SS4	Complete Loss of Heat Removal Capability	SS4	Complete Loss of Heat Removal Capability
Mode App.	Power Operation, Startup, Hot Standby, Hot Shutdown		1- Power Operation, 2-Startup, 3-Hot Standby, 4-Hot Shutdown
Site Specific Justifications	None		
Difference	None		
Deviation	None		

NEI EAL#	NEI EAL Wording	PBNP EAL#(s)	PBNP EAL Wording
1	Loss of core cooling and heat sink (PWR)	SS4.1	Loss of core cooling (CSP-C.1) AND heat sink (CSP-H.1)
Site Specific Justifications	*EAL* - CSP-C.1, Response to Inadequate Core Cooling and CSP-H.1, Response to Loss of Secondary Heat Sink are the site specific procedures associated with loss of core cooling and heat sink. *Basis* - None		
Difference	None		
Deviation	None		

NEI IC#	NEI IC Wording	PBNP IC#(s)	PBNP IC Wording
SS6	Inability to Monitor a SIGNIFICANT TRANSIENT in Progress	SS6	Inability to Monitor a SIGNIFICANT TRANSIENT in Progress
Mode App.	Power Operation, Startup, Hot Standby, Hot Shutdown		1- Power Operation, 2-Startup, 3-Hot Standby, 4-Hot Shutdown
Site Specific Justifications	None		
Difference	None		
Deviation	None		

NEI EAL#	NEI EAL Wording	PBNP EAL#(s)	PBNP EAL Wording
1	a. Loss of most or all (site-specific) annunciators associated with safety systems. **AND** b. Compensatory non-alarming indications are unavailable. **AND** c. Indications needed to monitor (site-specific) safety functions are unavailable. **AND** d. SIGNIFICANT TRANSIENT in progress.	SS6.1	Loss of most or all annunciators associated with the following safety systems: • ECCS • Containment Isolation • Reactor Trip • Process or Effluent Radiation Monitors • Electrical Distribution/Diesel Generators **AND** SIGNIFICANT TRANSIENT is in progress **AND** Compensatory non-alarming indications are unavailable **AND** Indications needed to monitor the ability to shut down the reactor, maintain the core cooled, maintain the reactor coolant system intact, and maintain containment intact are unavailable
Site Specific Justifications	*EAL* - The specified annunciators or indicators for this EAL include those identified in the Abnormal Operating Procedures, in the Emergency Operating Procedures, and in other EALs (e.g., area, process, and/or effluent rad monitors, etc *Basis* – The following wording was added to the basis section to clearly define "Significant Transient" and "Compensatory indications" in accordance with NEI guidance and does not alter the meaning or intent of the EAL. ▪ SIGNIFICANT TRANSIENT includes response to automatic or manually initiated functions such as trips, runbacks involving greater than 25% thermal power change, ECCS injections, or thermal power oscillations of 10% or greater ▪ Compensatory non-alarming indications include the plant process computer, SPDS, plant recorders, or plant instrument displays in the control room		
Difference	• SIGNIFICANT TRANSIENT placed 2nd on list to provide user with clear escalation path criteria		

	between EALs (Formatting change only) • Generic difference # 16 for "site-specific" applies. • These changes are not a deviation because they do not alter the meaning or intent, such that classification of the event could be different between the NEI guidance and the plant EAL
Deviation	None

NEI IC#	NEI IC Wording	PBNP IC#(s)	PBNP IC Wording
SG1	Prolonged Loss of All Offsite Power and Prolonged Loss of All Onsite AC Power to Essential Busses	SG1	Prolonged Loss of All Offsite Power and Prolonged Loss of All Onsite AC Power to Essential Busses
Mode App.	Power Operation, Startup, Hot Standby, Hot Shutdown		1- Power Operation, 2-Startup, 3-Hot Standby, 4-Hot Shutdown
Site Specific Justifications	None		
Difference	None		
Deviation	None		

NEI EAL#	NEI EAL Wording	PBNP EAL#(s)	PBNP EAL Wording
1	Loss of power to (site-specific) transformers. **AND** Failure of (site-specific) emergency diesel generators to supply power to emergency busses. **AND** Either of the following: (a or b) a. Restoration of at least one emergency bus within (site-specific) hours is <u>not</u> likely **OR** b. (Site-Specific) Indication of continuing degradation of core cooling based on Fission Product Barrier monitoring.	SG1.1	Loss of all offsite power to safety-related 4160 VAC buses 1(2)-A05 and 1(2)-A06 **AND** Failure of emergency diesel generators to supply power to safety related 4160 VAC buses **AND** Either of the following: (a or b) a. Restoration of at least one safety-related 4160 VAC bus within 4 hours is not likely **OR** b. Continuing degradation of core cooling based on Fission Product Barrier monitoring as indicated by entry into Core Cooling-RED path (CSP-C.1) or Core Cooling-ORANGE path (CSP-C.2)
Site Specific Justifications	*EAL* - • safety-related 4160 VAC buses 1(2)-A05 and 1(2)-A06 - - Offsite power sources include the four 345 KVAC lines (111, 121, Q303 and 151) through the 13.8 KVAC system to the LVSAT and 345 KVAC backfed through the 19 KVAC system to the UAT. (Ref. DBD-22, 4160 VAC System) • 4 hours - The 4 hours to restore AC power is based on the site blackout coping analysis performed in conformance with 10 CFR 50.63 and Regulatory Guide 1.155, "Station Blackout," [Ref 10]. • "Conditions require entry into Core Cooling-RED path (CSP-C.1) or Core Cooling-ORANGE path (CSP-C.2)" represent the site-specific indication of continuing degradation of core cooling based on Fission Product Barrier monitoring (see Fuel Cladding Loss #1 and Challenge #1 thresholds). *Basis* - None		
Difference	• Removed the word "indication" under item b. as unnecessary wording.		

	• Generic differences # 15 for "offsite" applies. • The NEI example EAL condition "Loss of power to (site-specific) transformers for greater than 15 minutes" has been changed to "Loss of offsite power to both safety-related...buses...for GREATER THAN 15 min." The PBNP wording focuses the classification on the loss of offsite power capability rather than the status of one or more transformers that may or may not be capable of powering the essential buses. Due to the nature of the off site power sources through two onsite transformers, it would be possible to maintain power to the transformers and lose power to the buses which would result in loss of offsite power, yet, under the NEI wording and event would not be classified as long as there was power to the transformers. In order to ensure a classification is made in accordance with the NEI Basis, loss of power to the busses was used in the EAL wording • These changes are not a deviation because they do not alter the meaning or intent, such that classification of the event could be different between the NEI guidance and the plant EAL
Deviation	None

NEI IC#	NEI IC Wording	PBNP IC#(s)	PBNP IC Wording
SG2	Failure of the Reactor Protection System to Complete an Automatic Scram and Manual Scram was NOT Successful and There is Indication of an Extreme Challenge to the Ability to Cool the Core	SG2	Failure of the Reactor Protection System to Complete an Automatic Trip and Manual Trip was NOT Successful and There is Indication of an Extreme Challenge to the Ability to Cool the Core
Mode App.	Power Operation, Startup		1- Power Operation, 2-Startup
Site Specific Justifications	None		
Difference	• Generic difference # 10 for "trip" applies. • This change is not a deviation because it does not alter the meaning or intent, such that classification of the event could be different between the NEI guidance and the plant EAL		
Deviation	None		

NEI EAL#	NEI EAL Wording	PBNP EAL#(s)	PBNP EAL Wording
1	Indications exist that automatic and manual scram were not successful. **AND** Either of the following: (a or b) a. Indication(s) exists that the core cooling is extremely challenged. **OR** b. Indication(s) exists that heat removal is extremely challenged	SG2.1	Indication(s) exist that automatic <u>and</u> manual trip were NOT successful in reducing power to LESS THAN 5% **AND** EITHER of the following: (a. or b.): a. Indication(s) exist that the core cooling is extremely challenged (Core Cooling-RED path (CSP-C.1)) **OR** b. Indication(s) exist that heat removal is extremely challenged (Heat Sink-RED path (CSP-H.1))
Site Specific Justifications	*EAL* - ▪ "Core Cooling-RED path (CSP-C.1) " – Response to Inadequate Core Cooling" and "Heat Sink-RED path (CSP-H.1) "- were added as site specific references. ▪ LESS THAN 5%- In response to industry questions concerning the definition of a successful reactor trip, NEI and the NRC agreed in System Malfunction Question #7 of "Methodology for Development of Emergency Action Levels NUMARC/NESP-007 Rev. 2 Questions and Answers" that "...the scram is considered unsuccessful when enough control rods have not inserted to cause the reactor power to fall below that percent power associated with the ability of the safety systems to remove heat and continue to decrease." 5% is the power level specified in Subcriticality-RED path. *Basis* – The following wording was added to the basis section as justification for selection of the site specific procedures and does not alter the meaning or intent of the EAL. ▪ The extreme challenge to the ability to cool the core is intended to mean that the core exit temperatures are at or approaching 1200 degrees F or that the reactor vessel water level is below the top of active fuel. This EAL equates to a core cooling RED condition and an		

	entry into a critical safety procedure (CSP-C.1). ▪ Another consideration is the inability to initially remove heat during the early stages of this sequence. If emergency feedwater flow is insufficient to remove the amount of heat required by design from at least one steam generator, an extreme challenge should be considered to exist. This EAL equates to a Heat Sink RED condition and an entry into a critical safety procedure (CSP-H.1).
Difference	• Generic differences # 8 for "LESS THAN", and # 10 for "trip" apply. • These changes are not a deviation because they do not alter the meaning or intent, such that classification of the event could be different between the NEI guidance and the plant EAL
Deviation	None

Enclosure VI

Reference Material

Index for Resource Material

CD #1

1. Bechtel Drawing C-3 Plant Areas
2. BG AOP-10A, Safe Shutdown – Local Control
3. Calculation 2004-0006, Dose Rate Calculation for Containment High Range and Refueling Floor Area Radiation Monitors Under Accident Conditions
4. Calculation 96-0073, 2/29/96, (NEPG-86-515), RE-109 Dose Rate Readings Versus Primary System Halogen Concentration Integrity
5. Calculation WEP-SPT-12, EOP S1 Reduction Analysis 6/25/99
6. CSP-P.1, Response to Imminent Pressurized Thermal Shock Condition
7. DBD-T-41, Module A, Hazards – Internal and External Flooding
8. DG-CO2, Internal Flooding
9. EPRI Document, "Guidelines for Nuclear Plant Response to an Earthquake", NP – 6695, 12/89
10. NPC95-00559, PBNP Individual Plant Examination (IPE) for Internal Events and Internal Flood
11. NUHOMS COC-7, Technical Specification 1.2.7
12. NUHOMS COC-7, Standardized NUHOMS Horizontal Modular Storage System Certificate of Compliance No. 1004
13. NUHOMES SR, SER Amendment #7
14. STPT 2.1, Safety Injection, Rev 2., dated 1-/15/96

CD #2

1. Fire Protection Evaluation Report
2. Final Safety Analysis Report
3. Technical Specifications
4. Technical Requirements Manual

Hard Copy –
Calculation 2004-0019, Failed Fuel Monitor (RE-109) / Fuel Damage Correlation

Point Beach Nuclear Plant

CALCULATION COVER SHEET

Calculation/Addendum Number:	Title of Calculation/Addendum:
2004-0019	Failed Fuel Monitor (RE-109) Reading / Fuel Damage Correlation

System (CHAMPS Identifier Codes): RMS	UNIT: PB0 ☐ PB1 ☒ PB2 ☒

☒ Original Calculation/Addendum
☐ Revised Calculation/Addendum Revision # ____
☒ Supersedes Calculation/Addendum # 96-0073
☐ Canceled
☐ Placed on Administrative Hold, Ref. CAP ____

QA Scope ☐ Yes ☒ No
Safety Related ☐ Yes ☒ No

Discipline:
☐ CIVIL
☐ ELECTRICAL
☐ INSTRUMENTATION AND CONTROL
☐ MECHANICAL
☐ NUCLEAR
☐ COMPONENTS
☐ PRA
☒ CHEMICAL AND RADIOLOGICAL
☐ SYSTEMS

This Calculation has been reviewed in accordance with NP 7.2.4. The review was accomplished by one or a combination of the following (check all that apply):	Reviewers' Initials (Qual Required)
☐ A review of a representative sample of repetitive calculations.	
☐ A review of the calculation against a similar calculation previously performed.	
☒ A detailed review of the calculation.	SRS
☐ A review by an alternate, simplified, or approximate method of calculation.	

Preparer (Qual Req'd)	Reviewer (Qual Req'd)	Discipline	Name	Signature	Date
☒	☐	Rad	Carl Onesti	[signature]	10-13-04
☐	☒	Rad	Sara Scott	[signature]	10-13-04
☐	☐				
☐	☐				
☐	☐				
☐	☐				
☐	☐				
☐	☐				

Approver: Printed Name: Stu Thomas
Signature: [signature]
Date: 10/13/04

Calculation Page Inventory

Section or Attachment	Page #(s)	Revision	Section or Attachment	Page #(s)	Revision
Cover Sheet	1	0			
Page Inventory	2	0			
Comments	3	0			
Purpose	4	0			
Methodology	4	0			
Assumptions	4-5	0			
References	5-6	0			
Inputs	6-8	0			
Calculation	8-12	0			
Results and Conclusions	13	0			
Attachment A	15	0			
Attachment B	16-62	0			
Attachment C	63-69	0			
Attachment D	70-87	0			
Attachment E	88	0			

Comments And Resolution

Reviewer Comments:	Resolution:

Purpose:

The purpose of this calculation is to calculate correlations for estimating RCS total radionuclide activity, I-131 dose equivalent activity, and fuel clad failure percentage using the failed fuel monitor (RE-109) reading under failed fuel conditions (fuel clad damage and fuel gap inventory release). This calculation does not apply to melted fuel conditions. This calculation is valid for both Unit 1 and Unit 2. This calculation was performed for uprated power conditions (1683 MWth). This calculation was performed to address OTH032889.

Methodology:

The methodology of this calculation is to calculate the concentration of radioactive materials in the reactor coolant system as a function of time after fuel failure in accordance with the guidance of Regulatory Guide 1.183, the photon spectrum emanated by the radioactive materials in the coolant and the dose rate at the failed fuel monitor location due to the emitted photons. The calculation was performed using details for the 1RE-109 monitor/sample tubing equipment arrangement (Reference 1). Details for the 2RE-109 monitor/sample tubing equipment arrangement are equivalent.

There are no acceptance criteria for this calculation.

Unvalidated Assumptions:

1. It is assumed that 1 % of fuel in the reactor core is affected when fuel clad failure occurs.

   Basis: Some degree of failed fuel needs to be assumed to provide the data needed, e.g., dose rate at the failed fuel monitor along with the concomitant primary system activity, to calculate the correlations desired. Once a correlation is determined, it doesn't matter what the failed fuel value is, the use of the correlation along with the failed fuel monitor reading will provide the failed fuel value.

2. It is assumed that radioactive decay is the only mechanism removing radioactivity from the primary coolant.

   Basis: The effect of cleanup is to remove radioactivity from the primary system but that affects both the dose rate at the failed fuel monitor and the activity in the sample system tubing. Implicit in this assumption is that each radionuclide is removed equally through the action of the cleanup system.

Validated Assumptions:

1. It is assumed that the source term activity is released instantaneously and homogeneously through the primary coolant at the time of fuel clad failure.

   Basis: Reference 2, Appendices G and H.

2. It is assumed that the density of water in the sample system at the RE-109 monitor location is 1 gram/cubic centimeter.

Basis: The failed fuel monitor, RE-109, is part of the hot leg sample line. The hot leg sample line is considered a high pressure, high temperature system. Heat exchangers are located in the high pressure, high temperature system to cool the sample liquid to below 130 °F (Reference 12, p 9.11-2). The specific volume for saturated liquid at 130 °F is 0.016247 ft^3 per lb_m which corresponds to a density of 0.99 g/cc (Reference 16).

3. It is assumed that the failed fuel monitor is calibrated to express dose rate at the detector location.

   Basis: Reference 17.

References:

1. Drawing 13754.01-SK-1049-2, "Installation Detail 1-RE-109," Revision 2.

2. Regulatory Guide 1.183, "Alternative Radiological Source Terms for Evaluating Design Basis Accidents at Nuclear Power Reactors," July 2000.

3. Westinghouse Letter WEP-01-057, "Alternate Source Term Assumptions for Evaluating Radiological Analyses," 9/25/2001.

4. Radiological Health Handbook, U.S. Department of Health, Education and Welfare, Revised Edition January 1970.

5. Tapley, Byron D., Ed., "Eshbach's Handbook of Engineering Fundamentals – Fourth Edition," John Wiley & Sons, Inc., 1990.

6. Beiser, Arthur, "Modern Technical Physics – 4th Edition," The Benjamin/Cummins Publishing Company, Inc., 1983.

7. Cain, V. R., "A User's Manual for QAD-CG, The Combinatorial Geometry Version of the QAD-P5A Point Kernel Shielding Code," Bechtel Power Corporation, July 1977.

8. Burmeister, Regan, "QAD-SRA: A Monte Carlo Version of QAD-CGGP," Shonka Research Associates, 8/17/97.

9. Croff, A. G., "A User's Manual for the ORIGEN2 Computer Code," Oak Ridge National Laboratory, July 1980.

10. Burmeister, Regan, "MONTE: A Monte Carlo Point Generator," Shonka Research Associates, Inc., 8/12/97.

11. Walker, F. William, Dudley G. Miller, Dr. Frank Reiner, "Nuclides & Isotopes, Thirteenth Edition," General Electric, 1983.

12. Final Safety Analysis Report, Point Beach Nuclear Plant Units 1 & 2.

13. Shleien, Bernard; Slaback, Lester; and Birky, Brian, Eds., Handbook of Health Physics and Radiological Health, Third Edition, Williams and Wilkins, 1998.

14. Drawing 541F092 Sh. 1, P&ID for U1 Primary Sample System, Rev. 37.

15. DG-M02, "Westinghouse Piping Class Summary," Revision 8.

16. 13th Edition of Steam Tables, Combustion Engineering.

17. HPCAL 3.2, "Area Monitor Calibration procedure DA1-1 and DA1-6 Detector Assemblies."

Inputs:

1. The core total fission product activities are listed below. (Reference 3, Table 4)

Isotope	Activity (curies)	Isotope	Activity (curies)	Isotope	Activity (curies)
I-131	4.48E+07	Kr-85m	1.20E+07	Cs-134	9.23E+06
I-132	6.46E+07	Kr-85	5.45E+05	Cs-136	2.30E+06
I-133	9.15E+07	Kr-87	2.31E+07	Cs-137	5.92E+06
I-134	1.01E+08	Kr-88	3.25E+07	Rb-86	9.36E+04
I-135	8.56E+07	Xe-131m	4.81E+05		
		Xe-133m	2.85E+06		
		Xe-133	9.07E+07		
		Xe-135m	1.79E+07		
		Xe-135	2.33E+07		
		Xe-138	7.58E+07		

2. The nuclide decay constants are listed below. (Reference 3, Table 3)

Isotope	Decay Constant (hr^{-1})	Isotope	Decay Constant (hr^{-1})	Isotope	Decay Constant (hr^{-1})
I-131	3.59E-03	Kr-85m	1.55E-01	Cs-134	3.84E-05
I-132	3.01E-01	Kr-85	7.38E-06	Cs-136	2.20E-03
I-133	3.33E-02	Kr-87	5.45E-01	Cs-137	2.64E-06
I-134	7.91E-01	Kr-88	2.44E-01	Rb-86	1.55E-03
I-135	1.05E-01	Xe-131m	2.43E-03		
		Xe-133m	1.32E-02		
		Xe-133	5.51E-03		
		Xe-135m	2.72E+00		
		Xe-135	7.63E-02		
		Xe-138	2.93E+00		

3. The fractions of the core fission product inventory in the fuel pin gap are listed below. (Reference 2, Table 3)

Group	Release Fraction
I-131	0.08
Kr-85	0.10
Other noble gases	0.05
Other halogens	0.05
Alkali metals	0.12

4. The gamma dose conversion factors are listed below. (Reference 13, Table 6.2.1)

Photon Energy Group (MeV)	Conversion Factor (rem/hr per MeV/cm^2-s)
1.000E-02	3.961E-04
2.500E-02	3.201E-05
3.750E-02	1.051E-05
5.750E-02	4.673E-06
8.500E-02	3.113E-06
1.250E-01	2.608E-06
2.250E-01	2.515E-06
3.750E-01	2.489E-06
5.750E-01	2.287E-06
8.500E-01	2.069E-06
1.250E+00	1.856E-06
1.750E+00	1.674E-06
2.250E+00	1.543E-06
2.750E+00	1.440E-06
3.500E+00	1.322E-06

5. Material composition for stainless steel: 1.524 g/cc Cr, 0.822 g/cc Ni, 0.080 g/cc Si, 0.006 g/cc C, 0.160 g/cc Mn, 5.447 g/cc Fe.

   (Reference 5, Table 16.4)

6. Material composition for air: 78.084 v% N, 20.974 v% O. (Reference 5, p. 6.10)

7. Density of air at standard atmospheric pressure: 1.29E-03 g/cc. (Reference 4, p. 66)

8. Avogadro constant: 6.023E+23 atoms/mole. (Reference 4, p. 13)

9. The mass of the primary system is 235,935 lbs. (Reference 3)

10. The thyroid dose conversion factors (rem/Curie) are: I-131, 1.07E+06; I-132, 6.29E+03; I-133, 1.81E+05; I-134, 1.07E+03; and I-135, 3.14E+04. (Reference 12, Table 14.3.5-2)

11. Dimensional information for the RE-109 failed fuel monitor/sample tubing equipment arrangement are taken from Reference 1. See Attachment E for hand drawing.

12. The pipe classification for the primary sample system tubing by RE-109 is 2505R. (Reference 14).

13. The sample tubing is 3/8" stainless steel. (Reference 1)

14. The outside diameter and wall thickness for the sample tubing is 3/8" and 0.065", respectively. (Reference 15, page 27)

15. The activity released to the primary coolant is 100 percent of the gap inventory in the fuel. (Reference 3)

16. The conversion factor for pounds to grams is 454. (Reference 16)

17. Computer program QAD-SRA, Version 1.05, Serial No. 121698.

18. Computer program ORIGEN2-SRA, V2.1 (8-1-91).

19. Computer program MONTE-SRA, Rev. 0 (SRA-96-005).

20. Computer program Microsoft Excel 2000 (9.0.6926 SP-3), Product ID 50627-700-2854925-02785.

21. Material composition for water: 2 atoms of H and 1 atom of O per water molecule. (Reference 6, p. 353)

22. Density of water: 1 g/cc (0.889 g/cc O, 0.111 g/cc H). (Reference 4, p. 66)

Calculation:

The calculation was performed in the following steps:

1. The concentration of radioactive material in the primary coolant as a function of time was calculated.
2. The photon spectrum generated by the nuclides in the primary coolant was calculated.
3. The dose rate at the failed fuel monitor (RE-109) was calculated due to the activity in the sample line.
4. The I-131 dose equivalent values were calculated.
5. The correlations for percent clad failure per mR/hr, total primary system activity (μCi/gm) per mR/hr, and I-131 dose equivalent activity (μCi/gm) per mR/hr were calculated.

Steps 1 and 2:

The activity in the primary coolant (in units of Curies per gram of coolant) when fuel clad failure occurs was calculated by multiplying the core inventory (Input 1) by the fraction of the core inventory in the fuel pin gap (Input 3) and by the fuel clad percentage failure (Unvalidated assumption 1, as a fraction) and dividing by the primary coolant mass (Input 9). This calculation was performed using a Microsoft Excel spreadsheet (Input 20) and the results are shown in Table 1. The activity in the primary coolant was then converted to an equivalent value (in units of gram of radionuclide per gram of coolant) and used as input for an ORIGEN2 program calculation (Input 18). This program performed the decay calculation for the radionuclide mixture in the

primary coolant and calculated both the primary coolant activity and the photon spectrum at the following times following the failure of the fuel clad: 0 hours, 2 hours, 4 hours, 8 hours, 12 hours, and 24 hours. Table 2 lists the calculated primary coolant activities as a function of time. Table 3 lists the calculated photon spectrum as a function of time. The ORIGEN2 input file is listed in Attachment A. The ORIGEN2 output file is listed in Attachment B.

$$\text{Coolant activity (Ci/g)} = \frac{\text{Activity released to coolant (Ci)}}{\text{Coolant mass (g)}} = \frac{\text{Core inventory (Ci)} \times \text{Gap fraction} \times \text{Clad failure fraction}}{\text{Coolant mass (g)}} \quad \text{Eq. 1}$$

$$\text{Coolant activity (g/g coolant)} = \frac{\text{Coolant activity (Ci/g)} \times 3.70E+10 \text{ dis/Ci-s} \times \text{Atomic mass (g/mole)} \times 3600 \text{ s/hr}}{\text{Decay Constant (1/hr)} \times 6.023E+23 \text{ atoms/mole}} \quad \text{(Eq. 2)}$$

TABLE 1
Primary Coolant Activity at Time of Fuel Clad Failure

Primary system mass = 235,935 lbs = 1.07E+08 gm

Isotope	Core Inventory (Curies)	Gap Inventory (Curies)	RCS Activity* (Ci/g)	Decay Constant (1/hr)	Atomic Mass (g/mole)	Nuclide ID	RCS Concentration (g/g coolant)
I-131	4.48E+07	3.58E+06	3.35E-04	3.59E-03	131	531310	2.70E-09
I-132	6.46E+07	3.23E+06	3.02E-04	3.01E-01	132	531320	2.92E-11
I-133	9.15E+07	4.58E+06	4.27E-04	3.33E-02	133	531330	3.77E-10
I-134	1.01E+08	5.05E+06	4.71E-04	7.91E-01	134	531340	1.77E-11
I-135	8.56E+07	4.28E+06	4.00E-04	1.05E-01	135	531350	1.14E-10
Kr-85m	1.20E+07	6.00E+05	5.60E-05	1.55E-01	85	360851	6.79E-12
Kr-85	5.45E+05	5.45E+04	5.09E-06	7.38E-06	85	360850	1.30E-08
Kr-87	2.31E+07	1.16E+06	1.08E-04	5.45E-01	87	360870	3.81E-12
Kr-88	3.25E+07	1.63E+06	1.52E-04	2.44E-01	88	360880	1.21E-11
Xe-131m	4.81E+05	2.41E+04	2.25E-06	2.44E-03	131	541311	2.67E-11
Xe-133m	2.85E+06	1.43E+05	1.33E-05	1.32E-02	133	541331	2.96E-11
Xe-133	9.07E+07	4.54E+06	4.23E-04	5.51E-03	133	541330	2.26E-09
Xe-135m	1.79E+07	8.95E+05	8.36E-05	2.71E+00	135	541351	9.21E-13
Xe-135	2.33E+07	1.17E+06	1.09E-04	7.61E-02	135	541350	4.27E-11
Xe-138	7.58E+07	3.79E+06	3.54E-04	2.94E+00	138	541380	3.67E-12
Cs-134	9.23E+06	1.11E+06	1.03E-04	3.84E-05	134	551340	7.98E-08
Cs-136	2.30E+06	2.76E+05	2.58E-05	2.20E-03	136	551360	3.52E-10
Cs-137	5.92E+06	7.10E+05	6.63E-05	2.64E-06	137	551370	7.61E-07
Rb-86	9.36E+04	1.12E+04	1.05E-06	1.55E-03	86	370860	1.29E-11
Totals	6.84E+08	3.68E+07	3.44E-03				8.60E-07

* Based on 1% clad failure.

TABLE 2
Sample Line Activity Versus Time After Fuel Clad Failure*
(Curies/g)

Nuclide	0 hours	1 hour	2 hours	4 hours	8 hours	12 hours	24 hours
I131	3.35E-04	3.34E-04	3.33E-04	3.30E-04	3.25E-04	3.21E-04	3.07E-04
I132	3.02E-04	2.23E-04	1.65E-04	9.03E-05	2.71E-05	8.11E-06	2.18E-07
I133	4.27E-04	4.13E-04	4.00E-04	3.74E-04	3.27E-04	2.86E-04	1.92E-04
I134	4.72E-04	2.14E-04	9.72E-05	2.00E-05	8.46E-07	3.58E-08	2.71E-12
I135	4.01E-04	3.61E-04	3.25E-04	2.63E-04	1.73E-04	1.14E-04	3.23E-05
KR 85	5.10E-06	5.10E-06	5.10E-06	5.10E-06	5.10E-06	5.10E-06	5.10E-06
KR 85M	5.59E-05	4.79E-05	4.10E-05	3.01E-05	1.62E-05	8.73E-06	1.36E-06
KR 87	1.08E-04	6.26E-05	3.63E-05	1.22E-05	1.38E-06	1.56E-07	2.24E-10
KR 88	1.52E-04	1.19E-04	9.32E-05	5.72E-05	2.15E-05	8.11E-06	4.33E-07
RB 88	0.00E+00	1.16E-04	1.03E-04	6.38E-05	2.41E-05	9.06E-06	4.84E-07
XE131M	2.24E-06	2.24E-06	2.25E-06	2.25E-06	2.27E-06	2.28E-06	2.31E-06
XE133	4.23E-04	4.23E-04	4.23E-04	4.23E-04	4.21E-04	4.19E-04	4.07E-04
XE133M	1.33E-05	1.33E-05	1.32E-05	1.32E-05	1.30E-05	1.28E-05	1.19E-05
XE135	1.09E-04	1.30E-04	1.45E-04	1.67E-04	1.79E-04	1.69E-04	1.03E-04
135M	8.39E-05	5.91E-05	5.21E-05	4.22E-05	2.77E-05	1.82E-05	5.18E-06
138	3.53E-04	1.88E-05	9.97E-07	2.82E-09	2.24E-14	1.79E-19	9.30E-35
CS134	1.03E-04	1.03E-04	1.03E-04	1.03E-04	1.03E-04	1.03E-04	1.03E-04
CS136	2.58E-05	2.58E-05	2.57E-05	2.56E-05	2.54E-05	2.51E-05	2.45E-05
BA136M	0.00E+00	4.24E-06	4.23E-06	4.22E-06	4.18E-06	4.14E-06	4.03E-06
CS137	6.62E-05	6.62E-05	6.62E-05	6.62E-05	6.62E-05	6.62E-05	6.62E-05
BA137M	0.00E+00	6.27E-05	6.27E-05	6.27E-05	6.27E-05	6.27E-05	6.26E-05
CS138	0.00E+00	6.15E-05	2.02E-05	1.58E-06	9.03E-09	5.16E-11	9.58E-18
RB 86	1.05E-06	1.05E-06	1.05E-06	1.04E-06	1.04E-06	1.03E-06	1.01E-06
Totals	3.44E-03	2.87E-03	2.52E-03	2.16E-03	1.83E-03	1.64E-03	1.33E-03

*Based on 1% clad failure.

TABLE 3
Sample Line Photon Spectrum Versus Time After Fuel Clad Failure**
(photons/g-second)

Photon Energy (MeV)	0 hours	1 hour	2 hours	4 hours	8 hours	12 hours	24 hours
1.00E-02	3.16E+07	2.67E+07	2.11E+07	1.52E+07	1.06E+07	8.51E+06	5.88E+06
2.50E-02	7.88E+06	6.76E+06	5.47E+06	4.11E+06	3.01E+06	2.52E+06	1.89E+06
3.75E-02	1.12E+07	1.04E+07	9.64E+06	8.84E+06	8.18E+06	7.85E+06	7.22E+06
5.75E-02	5.81E+06	5.11E+06	3.98E+06	2.79E+06	1.87E+06	1.47E+06	9.93E+05
8.50E-02	9.28E+06	8.92E+06	8.22E+06	7.47E+06	6.87E+06	6.60E+06	6.15E+06
1.25E-01	3.06E+06	2.42E+06	1.70E+06	1.04E+06	6.08E+05	4.44E+05	2.64E+05
2.25E-01	1.84E+07	1.27E+07	1.16E+07	1.07E+07	9.70E+06	8.65E+06	5.50E+06
3.75E-01	2.21E+07	1.57E+07	1.37E+07	1.20E+07	1.09E+07	1.04E+07	9.64E+06

TABLE 3
Sample Line Photon Spectrum Versus Time After Fuel Clad Failure**
(photons/g-second)

Photon Energy (MeV)	0 hours	1 hour	2 hours	4 hours	8 hours	12 hours	24 hours
5.75E-01	5.08E+07	4.31E+07	3.59E+07	2.82E+07	2.16E+07	1.86E+07	1.45E+07
8.50E-01	5.41E+07	3.30E+07	2.18E+07	1.25E+07	7.54E+06	6.17E+06	5.12E+06
1.25E+00	2.20E+07	1.93E+07	1.45E+07	1.02E+07	6.67E+06	4.74E+06	2.23E+06
1.75E+00	9.79E+06	6.38E+06	4.96E+06	3.38E+06	1.89E+06	1.14E+06	2.96E+05
2.25E+00	7.05E+06	3.88E+06	2.77E+06	1.66E+06	6.83E+05	3.02E+05	4.13E+04
2.75E+00	5.89E+05	6.26E+05	3.54E+05	1.36E+05	3.40E+04	1.10E+04	5.47E+02
3.50E+00	2.00E+04	5.27E+04	3.63E+04	1.86E+04	6.30E+03	2.30E+03	1.22E+02
5.00E+00	0.00E+00	7.04E+03	6.02E+03	3.69E+03	1.39E+03	5.23E+02	2.79E+01
7.00E+00	0.00E+00	0.00E+00	0.00E+00	0.00E+00	0.00E+00	0.00E+00	0.00E+00
9.50E+00	0.00E+00	0.00E+00	0.00E+00	0.00E+00	0.00E+00	0.00E+00	0.00E+00
Total	2.54E+08	1.95E+08	1.56E+08	1.18E+08	9.01E+07	7.75E+07	5.97E+07
Gr. Total*	6.63E+09	5.08E+09	4.07E+09	3.08E+09	2.35E+09	2.02E+09	1.56E+09

* Grand total (photons/s) = Total (photons/g-sec) x Water density (1 g/cc) x Source volume (26.1 cc)
** Based on 1% clad failure.

Step 3 – Using the photon spectrum data (Step 2), the dose rate at the failed fuel monitor (RE-109) was calculated due to the source term in the sample tubing. A model of the failed fuel monitor/sample tubing ipment arrangement was created using dimensional data contained in Reference 1 and a hand drawing is shown in Attachment E. A source point size of 20,000 was used which was calculated by the MONTE program (Input 19) using a QADCG input file. The dose rate was calculated by the QADCG program (Input 17). The results are listed in Table 5. The QADCG input file is described in Attachment C. The QADCG output files are contained in Attachments D. Each input file used is listed in the first part of the output file.

Step 4 – The I-131 dose equivalent activity was calculated by multiplying each iodine radionuclide activity by its respective thyroid dose conversion factor (Input 10), dividing each product by the I-131 thyroid dose conversion factor and then summing. The results are shown in Table 4.

TABLE 4
Sample Line I-131 Dose Equivalent Activity Versus Time After Fuel Clad Failure*
(MicroCuries/g)

Nuclide	I131	I132	I133	I134	I135	Total
DCF (rem/Ci)	1.07E+06	6.29E+03	1.81E+05	1.07E+03	3.14E+04	
Time = 0 Hours						
Conc. (uCi/g)	335	302	427	472	401	
I131 DE Conc. (μCi/g)	335	2	72	0	12	421
Time = 1 Hour						
Conc. (uCi/g)	334	223	413	214	361	
I131 DE Conc. (μCi/g)	334	1	70	0	11	416
Time = 2 Hours						

TABLE 4
Sample Line I-131 Dose Equivalent Activity Versus Time After Fuel Clad Failure*
(MicroCuries/g)

Conc. (uCi/g)	333	165	400	97	325	
I131 DE Conc. (µCi/g)	333	1	68	0	10	411
Time = 4 Hours						
Conc. (uCi/g)	330	90	374	20	263	
I131 DE Conc. (µCi/g)	330	1	63	0	8	402
Time = 8 Hours						
Conc. (uCi/g)	325	27	327	0.8	173	
I131 DE Conc. (µCi/g)	325	0	55	0	5	386
Time = 12 Hours						
Conc. (uCi/g)	321	0.8	286	0	114	
I131 DE Conc. (µCi/g)	321	0	48	0	3	373
Time = 24 Hours						
Conc. (uCi/g)	307	0.2	192	0	32	
I131 DE Conc. (µCi/g)	307	0	32	0	1	340

Step 5 - The total activity conversion factor at each time point was calculated by dividing the RCS total activity value (Step 2, in units of µCi/gm) by the respective RE-109 dose rate (in units of mR/hr). Similarly, the I-131 DE conversion factor was calculated by dividing the I-131 DE total activity (Step 4, in units of µCi/gm) by the respective RE-109 dose rate (Step 3, in units of mR/hr). The clad failure conversion factor was calculated by dividing 1 % clad failure value by the respective RE-109 dose rate (in units of mR/hr).

Table 5
Dose Rate at Failed Fuel Monitor Location After Fuel Clad Failure
(mR/hour)

Time From Initiating Event* (hours)	RE-109 dose rate (mR/hour)**	RCS Total Conc. (µCi /g)**	I-131 DE Total Conc. (µCi/g)**	Total Activity Conversion Factor (µCi/g per mR/hour)	I-131 DE Conversion Factor (µCi/g per mR/hour)	Clad Failure Conversion Factor (% clad failure per mR/hour)
0	6392	3440	421	5.38E-01	6.59E-02	1.56E-04
1	4629	2870	416	6.20E-01	8.99E-02	2.16E-04
2	3548	2520	411	7.10E-01	1.16E-01	2.82E-04
4	2523	2160	402	8.56E-01	1.59E-01	3.96E-04
8	1777	1830	386	1.03E+00	2.17E-01	5.63E-04
12	1450	1640	373	1.13E+00	2.57E-01	6.90E-04
24	1042	1330	340	1.28E+00	3.26E-01	9.60E-04

* Assumes reactor trip occurs when the fuel clad failure event occurs.
** Based on 1% clad failure.

Results and Conclusions:

The results were calculated using a source term corresponding to a reactor thermal power operating level of 1683 MWth. The results are applicable generally to other thermal power operating levels because core activity and photon intensity are directly proportional to the reactor thermal operating power level.

The failed fuel monitor reading at time equal to 0 that would correspond to 300 μCi/g I-131 DE is approximately 4500 mR/hr and the failed fuel monitor reading at time equal to 0 that would correspond to 50 μCi/g I-131 DE is approximately 750 mR/hr.

The calculated RCS total radionuclide activity and fuel clad failure percentage correlations for use with the failed fuel monitor (RE-109) reading are graphically displayed in Figure 1 below. To determine fuel clad failure percentage, total primary system activity, or total I-131 DE activity, multiply the respective conversion factor by the failed fuel monitor reading.

Example: An event occurs causing fuel failure. The failed fuel monitor reading 12 hours after fuel failure occurs is 2000 mR/hour. The conversion factor for fuel clad failure from Figure 1 is approximately 7E-04 % clad failure per mR/hr. The estimated fuel clad failure is 7E-04 x 2000 or 1.4 %.

These factors are acceptable for use when the sample system is not isolated, i.e., a containment isolation signal has not occurred. These factors can be used after sample system isolation has occurred, however, the values will only reflect the condition of the primary system at the time of isolation.

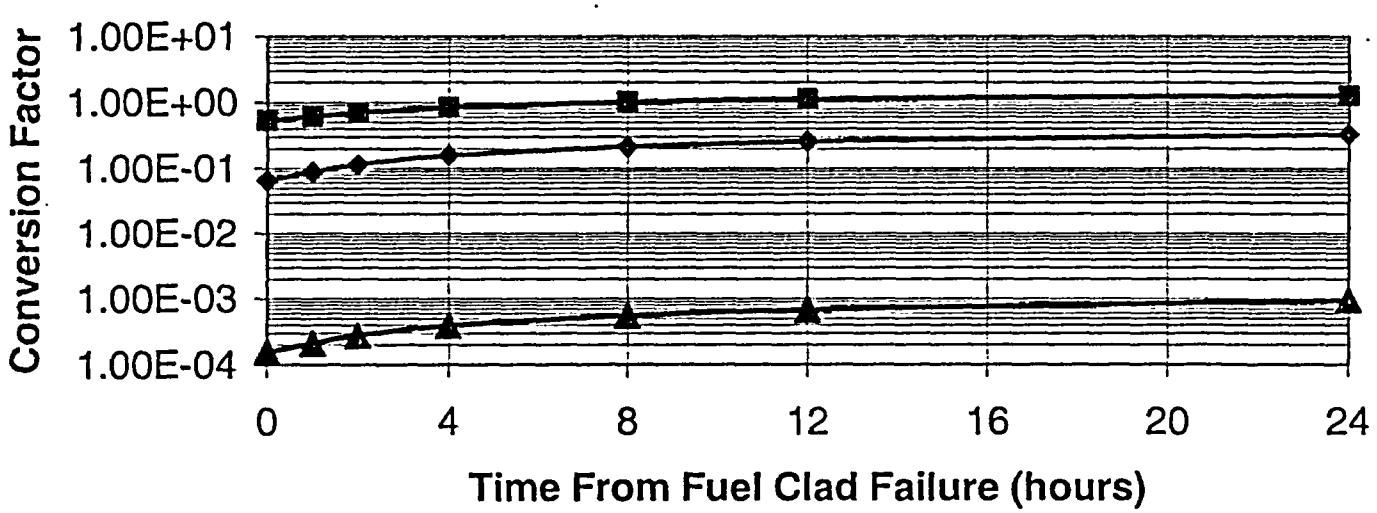

THIS PAGE INTENTIONALLY LEFT BLANK.

Attachment A – ORIGEN2 Input File

The program uses the primary system nuclide data as activity on a gram/g-coolant weight basis. The primary coolant activity (in g/g - coolant) was calculated using the following equation.

$$\text{Coolant activity (g/g coolant)} = \frac{\text{Coolant activity (Ci/g)} \times 3.70E+10 \text{ dis/Ci - s} \times \text{Atomic mass (g/mole)} \times 3600 \text{ s/hr}}{\text{Decay Constant (1/hr)} \times 6.023E+23 \text{ atoms/mole}}$$

The nuclide ID is equal to 10000*Z + 10*A + IS where Z is the atomic number of the nuclide, A is the atomic mass of the nuclide and IS is the isomeric state indicator (0 = ground state, 1 = excited state and 2 or greater not permitted). The primary coolant activity (in g/g - coolant) and the nuclide ID are inputs to the ORIGEN2 program which is used to perform the decay calculation.

```
 -1
-1
-1
RDA     ** RE109.INP **
RDA     ** ORIGEN 2.1  - Decay of radionuclides
LIP     0 0 0
RDA     Specify Libraries - Decay only
LIB     0    1 2 3     0 0 0    9   0   0   1      1
RDA     Specify photon libraries - read
PHO     101 102 103  10
RDA     Read initial composition into storage vector -1
INP     -1  1  -1  -1  1  1
TIT     Decay of containment activity on a per cc basis
RDA     Move storage vector -1 to output vector 1
RDA     Decay intervals
DEC     1.0   -1  2   3   2
DEC     2.0   2  3   3   0
DEC     4.0   3  4   3   0
DEC     8.0   4  5   3   0
DEC     12.0   5  6   3   0
DEC     24.0   6  7   3   0
DEC     48.0  7  8   3   0
DEC     72.0  8  9   3   0
DEC     96.0  9  10  3   0
DEC     144.0  10 11  3   0
DEC     288.0  11 12  3   0
MOV     -1  1  0   1
HED     1  0 HR
HED     2  1 HR
HED     3  2 HR
HED     4  4 HR
HED     5  8 HR
HED     6  12 HR
HED     7  24 HR
HED     8  48 HR
HED     9  72 HR
HED     10 96 HR
HED     11 144 HR
HED     12 288 HR
OPTL    24*8
OPTA    24*8
OPTF    4*8 3 8 3 17*8
OUT   -12  1  -1  0
END
3 531310 2.700E-09 531320 2.920E-11 531330 3.770E-10 531340 1.770E-11
3 531350 1.140E-10 360851 6.790E-12 360850 1.300E-08 360870 3.810E-12
3 360880 1.210E-11 541311 2.670E-11 541331 2.960E-11 541330 2.260E-09
3 541351 9.210E-13 541350 4.270E-11 541380 3.670E-12 551340 7.980E-08
3 551360 3.520E-10 551370 7.610E-07 370860 1.290E-11 0      0.0
```

Attachment B – ORIGEN2 Output File

```
1 PAGE                      TABLE OF CONTENTS ON UNIT = 13 FOR OUTPUT UNIT = 11
 ORIGEN2 V2.1 (8-1-91), Run on 03/10/04    at 13:15:17
0    1   OUTPUT TABLES--TITLE=  Decay of containment activity on a per cc basis                         RECYCLE # =  0
     1             REACTIVITY AND BURNUP DATA
                   *ACTIVATION PRODUCTS*****ACTIVATION PRODUCTS*****ACTIVATION PRODUCTS*****ACTIVATION PRODUCTS****
                   *ACTINIDES + DAUGHTERS***ACTINIDES + DAUGHTERS***ACTINIDES + DAUGHTERS***ACTINIDES + DAUGHTERS**
                   *FISSION PRODUCTS*******FISSION PRODUCTS*******FISSION PRODUCTS*******FISSION PRODUCTS*******
     2             CONCENTRATIONS, GRAMS       NUCLIDE TABLE:
    20             CONCENTRATIONS, GRAMS       SUMMARY TABLE:
    22             RADIOACTIVITY,  CURIES      NUCLIDE TABLE:
    40             RADIOACTIVITY,  CURIES      SUMMARY TABLE:
    42             (ALPHA,N) NEUTRON SOURCE
    43             SPONTANEOUS FISSION NEUTRON SOURCE
    44             ACTIVATION PRODUCT PHOTON TABLE
    46             ACTINIDE NUCLIDE PHOTON TABLE
    48             FISSION PRODUCT NUCLIDE PHOTON TABLE
1
                   **********************************************************
                   *                                                        *
                   *   OOOOO  RRRR   IIIII   GGGGG   EEEEE  N    N  22222   *
                   *   O   O  R   R    I    G        E      NN   N 22   22  *
                   *   O   O  RRRR     I    G    GG  EEEE   N NN N     22   *
                   *   O   O  R   R    I    G     G  E      N   NN   22     *
                   *   OOOOO  R   R  IIIII   GGGGGG  EEEEE  N    N  2222222 *
                   *                                                        *
                   *               Version 2.1 (8-1-91)                     *
                   *                                                        *
                   *                                                        *
                   *                                                        *
                   *              SSS    RRRRR     AA                       *
                   *             S   S   R    R   A  A                      *
                   *              S      R    R  A    A                     *
                   *               S     RRRRR   A    A                     *
                   *                S    R    R  AAAAAA                     *
                   *             S   S   R    R  A    A                     *
                   *              SSS    R    R  A    A                     *
                   *                                                        *
                   *          Shonka Research Associates, Inc.              *
                   *                                                        *
                   *                                                        *
                   *                                                        *
                   *    ORIGEN2 RUN  DATE: 03/10/04    TIME 13:15:17        *
                   *                                                        *
                   *                                                        *
                   **********************************************************
1                                                                            OUTPUT UNIT = 11                       PAGE    1
 ORIGEN2 V2.1 (8-1-91), Run on 03/10/04    at 13:15:17

     *  Decay of containment activity on a per cc basis
     POWER= 1.00000E+00 MW,  BURNUP= 1.00000E+00 MWD,  FLUX= 1.00E+00 N/CM**2-SEC
0                                           REACTIVITY AND BURNUP DATA
                          BASIS=[illegible]

              0 HR       1 HR       2 HR       4 HR       8 HR      12 HR      24 HR      48 HR      72 HR      96 HR     144 HR     288 HR
 TIME, SEC   0.00E+00  3.60E+03  7.20E+03  1.44E+04  2.88E+04  4.32E+04  8.64E+04  1.73E+05  2.59E+05  3.46E+05  5.18E+05  1.04E+06
```

NEUT. FLUX	0.00E+00	0.00E+00	0.00E+00	0.00E+00	0.00E+00	0.00E+00	0.00E+00	0.00E+00	0.00E+00	0.00E+00	0.00E+00	0.00E+00
SP POW,MW	0.00E+00	0.00E+00	0.00E+00	0.00E+00	0.00E+00	0.00E+00	0.00E+00	0.00E+00	0.00E+00	0.00E+00	0.00E+00	0.00E+00
BURNUP,MWD	0.00E+00	0.00E+00	0.00E+00	0.00E+00	0.00E+00	0.00E+00	0.00E+00	0.00E+00	0.00E+00	0.00E+00	0.00E+00	0.00E+00
K INFINITY	0.00000	0.00000	0.00000	0.00000	0.00000	0.00000	0.00000	0.00000	0.00000	0.00000	0.00000	0.00000
NEUT PRODN	0.00E+00	0.00E+00	0.00E+00	0.00E+00	0.00E+00	0.00E+00	0.00E+00	0.00E+00	0.00E+00	0.00E+00	0.00E+00	0.00E+00
NEUT DESTN	0.00E+00	0.00E+00	0.00E+00	0.00E+00	0.00E+00	0.00E+00	0.00E+00	0.00E+00	0.00E+00	0.00E+00	0.00E+00	0.00E+00
TOT BURNUP	0.00E+00	0.00E+00	0.00E+00	0.00E+00	0.00E+00	0.00E+00	0.00E+00	0.00E+00	0.00E+00	0.00E+00	0.00E+00	0.00E+00
AVG N FLUX	0.00E+00	0.00E+00	0.00E+00	0.00E+00	0.00E+00	0.00E+00	0.00E+00	0.00E+00	0.00E+00	0.00E+00	0.00E+00	0.00E+00
AVG SP POW	0.00E+00	0.00E+00	0.00E+00	0.00E+00	0.00E+00	0.00E+00	0.00E+00	0.00E+00	0.00E+00	0.00E+00	0.00E+00	0.00E+00

SIZE OF MMAX(I): MMAX= 1 #= 950 MMAX= 2 #= 290 MMAX= 3 #= 47 MMAX= 4 #= 3 MMAX= 5 #= 0 MMAX= 6 #= 0
MMAX= 7 #= 0 MMAX= 8 #= 0 MMAX= 9 #= 0 MMAX=10 #= 0 MMAX=11 #= 0 MMAX=12 #= 0

THE NUMBER OF NON-ZERO TERMS IN A=1656
THE NUMBER OF NON-ZERO FISSION PRODUCT YIELDS= 2
ILITE= 688 IACT= 129 IFP= 879 ITOT=1696
THE NUMBER OF NON-ZERO NATURAL ABUNDANCES= 437
THE NUMBER OF NON-ZERO PHOTON YIELDS= 7903
THE MAXIMUM NUMBER OF TERMS IN AP= 924

1 OUTPUT UNIT = 11 PAGE 2

ORIGEN2 V2.1 (8-1-91), Run on 03/10/04 at 13:15:17

* Decay of containment activity on a per cc basis

\+ FISSION PRODUCTS

POWER= 1.00000E+00 MW, BURNUP= 1.00000E+00 MWD, FLUX= 1.00E+00 N/CM**2-SEC

0 5 NUCLIDE TABLE: CONCENTRATIONS, GRAMS

	0 HR	1 HR	2 HR	4 HR	8 HR	12 HR	24 HR	48 HR	72 HR	96 HR	144 HR	288 HR
H 3	0.000E+00	0.000E+00	0.000E+00	0.000E+00	0.000E+00	0.000E+00	0.000E+00	0.000E+00	0.000E+00	0.000E+00	0.000E+00	0.000E+00
LI 6	0.000E+00	0.000E+00	0.000E+00	0.000E+00	0.000E+00	0.000E+00	0.000E+00	0.000E+00	0.000E+00	0.000E+00	0.000E+00	0.000E+00
LI 7	0.000E+00	0.000E+00	0.000E+00	0.000E+00	0.000E+00	0.000E+00	0.000E+00	0.000E+00	0.000E+00	0.000E+00	0.000E+00	0.000E+00
BE 9	0.000E+00	0.000E+00	0.000E+00	0.000E+00	0.000E+00	0.000E+00	0.000E+00	0.000E+00	0.000E+00	0.000E+00	0.000E+00	0.000E+00
BE 10	0.000E+00	0.000E+00	0.000E+00	0.000E+00	0.000E+00	0.000E+00	0.000E+00	0.000E+00	0.000E+00	0.000E+00	0.000E+00	0.000E+00
C 14	0.000E+00	0.000E+00	0.000E+00	0.000E+00	0.000E+00	0.000E+00	0.000E+00	0.000E+00	0.000E+00	0.000E+00	0.000E+00	0.000E+00
NI 66	0.000E+00	0.000E+00	0.000E+00	0.000E+00	0.000E+00	0.000E+00	0.000E+00	0.000E+00	0.000E+00	0.000E+00	0.000E+00	0.000E+00
CU 66	0.000E+00	0.000E+00	0.000E+00	0.000E+00	0.000E+00	0.000E+00	0.000E+00	0.000E+00	0.000E+00	0.000E+00	0.000E+00	0.000E+00
ZN 66	0.000E+00	0.000E+00	0.000E+00	0.000E+00	0.000E+00	0.000E+00	0.000E+00	0.000E+00	0.000E+00	0.000E+00	0.000E+00	0.000E+00
CU 67	0.000E+00	0.000E+00	0.000E+00	0.000E+00	0.000E+00	0.000E+00	0.000E+00	0.000E+00	0.000E+00	0.000E+00	0.000E+00	0.000E+00
ZN 67	0.000E+00	0.000E+00	0.000E+00	0.000E+00	0.000E+00	0.000E+00	0.000E+00	0.000E+00	0.000E+00	0.000E+00	0.000E+00	0.000E+00
ZN 68	0.000E+00	0.000E+00	0.000E+00	0.000E+00	0.000E+00	0.000E+00	0.000E+00	0.000E+00	0.000E+00	0.000E+00	0.000E+00	0.000E+00
ZN 69	0.000E+00	0.000E+00	0.000E+00	0.000E+00	0.000E+00	0.000E+00	0.000E+00	0.000E+00	0.000E+00	0.000E+00	0.000E+00	0.000E+00
ZN 69M	0.000E+00	0.000E+00	0.000E+00	0.000E+00	0.000E+00	0.000E+00	0.000E+00	0.000E+00	0.000E+00	0.000E+00	0.000E+00	0.000E+00
GA 69	0.000E+00	0.000E+00	0.000E+00	0.000E+00	0.000E+00	0.000E+00	0.000E+00	0.000E+00	0.000E+00	0.000E+00	0.000E+00	0.000E+00
ZN 70	0.000E+00	0.000E+00	0.000E+00	0.000E+00	0.000E+00	0.000E+00	0.000E+00	0.000E+00	0.000E+00	0.000E+00	0.000E+00	0.000E+00
GA 70	0.000E+00	0.000E+00	0.000E+00	0.000E+00	0.000E+00	0.000E+00	0.000E+00	0.000E+00	0.000E+00	0.000E+00	0.000E+00	0.000E+00
GE 70	0.000E+00	0.000E+00	0.000E+00	0.000E+00	0.000E+00	0.000E+00	0.000E+00	0.000E+00	0.000E+00	0.000E+00	0.000E+00	0.000E+00
ZN 71	0.000E+00	0.000E+00	0.000E+00	0.000E+00	0.000E+00	0.000E+00	0.000E+00	0.000E+00	0.000E+00	0.000E+00	0.000E+00	0.000E+00
ZN 71M	0.000E+00	0.000E+00	0.000E+00	0.000E+00	0.000E+00	0.000E+00	0.000E+00	0.000E+00	0.000E+00	0.000E+00	0.000E+00	0.000E+00
GA 71	0.000E+00	0.000E+00	0.000E+00	0.000E+00	0.000E+00	0.000E+00	0.000E+00	0.000E+00	0.000E+00	0.000E+00	0.000E+00	0.000E+00
GE 71	0.000E+00	0.000E+00	0.000E+00	0.000E+00	0.000E+00	0.000E+00	0.000E+00	0.000E+00	0.000E+00	0.000E+00	0.000E+00	0.000E+00
GE 71M	0.000E+00	0.000E+00	0.000E+00	0.000E+00	0.000E+00	0.000E+00	0.000E+00	0.000E+00	0.000E+00	0.000E+00	0.000E+00	0.000E+00
CO 72	0.000E+00	0.000E+00	0.000E+00	0.000E+00	0.000E+00	0.000E+00	0.000E+00	0.000E+00	0.000E+00	0.000E+00	0.000E+00	0.000E+00
NI 72	0.000E+00	0.000E+00	0.000E+00	0.000E+00	0.000E+00	0.000E+00	0.000E+00	0.000E+00	0.000E+00	0.000E+00	0.000E+00	0.000E+00
CU 72	0.000E+00	0.000E+00	0.000E+00	0.000E+00	0.000E+00	0.000E+00	0.000E+00	0.000E+00	0.000E+00	0.000E+00	0.000E+00	0.000E+00
ZN 72	0.000E+00	0.000E+00	0.000E+00	0.000E+00	0.000E+00	0.000E+00	0.000E+00	0.000E+00	0.000E+00	0.000E+00	0.000E+00	0.000E+00
GA 72	0.000E+00	0.000E+00	0.000E+00	0.000E+00	0.000E+00	0.000E+00	0.000E+00	0.000E+00	0.000E+00	0.000E+00	0.000E+00	0.000E+00

GE 72	0.000E+00	0.000E+00	0.000E+00	0.000E+00	0.000E+00	0.000E+00	0.000E+00	0.000E+00	0.000E+00	0.000E+00	0.000E+00	0.000E+00
CO 73	0.000E+00	0.000E+00	0.000E+00	0.000E+00	0.000E+00	0.000E+00	0.000E+00	0.000E+00	0.000E+00	0.000E+00	0.000E+00	0.000E+00
NI 73	0.000E+00	0.000E+00	0.000E+00	0.000E+00	0.000E+00	0.000E+00	0.000E+00	0.000E+00	0.000E+00	0.000E+00	0.000E+00	0.000E+00
CU 73	0.000E+00	0.000E+00	0.000E+00	0.000E+00	0.000E+00	0.000E+00	0.000E+00	0.000E+00	0.000E+00	0.000E+00	0.000E+00	0.000E+00
ZN 73	0.000E+00	0.000E+00	0.000E+00	0.000E+00	0.000E+00	0.000E+00	0.000E+00	0.000E+00	0.000E+00	0.000E+00	0.000E+00	0.000E+00
GA 73	0.000E+00	0.000E+00	0.000E+00	0.000E+00	0.000E+00	0.000E+00	0.000E+00	0.000E+00	0.000E+00	0.000E+00	0.000E+00	0.000E+00
GE 73	0.000E+00	0.000E+00	0.000E+00	0.000E+00	0.000E+00	0.000E+00	0.000E+00	0.000E+00	0.000E+00	0.000E+00	0.000E+00	0.000E+00
GE 73M	0.000E+00	0.000E+00	0.000E+00	0.000E+00	0.000E+00	0.000E+00	0.000E+00	0.000E+00	0.000E+00	0.000E+00	0.000E+00	0.000E+00
CO 74	0.000E+00	0.000E+00	0.000E+00	0.000E+00	0.000E+00	0.000E+00	0.000E+00	0.000E+00	0.000E+00	0.000E+00	0.000E+00	0.000E+00
NI 74	0.000E+00	0.000E+00	0.000E+00	0.000E+00	0.000E+00	0.000E+00	0.000E+00	0.000E+00	0.000E+00	0.000E+00	0.000E+00	0.000E+00
CU 74	0.000E+00	0.000E+00	0.000E+00	0.000E+00	0.000E+00	0.000E+00	0.000E+00	0.000E+00	0.000E+00	0.000E+00	0.000E+00	0.000E+00
ZN 74	0.000E+00	0.000E+00	0.000E+00	0.000E+00	0.000E+00	0.000E+00	0.000E+00	0.000E+00	0.000E+00	0.000E+00	0.000E+00	0.000E+00
GA 74	0.000E+00	0.000E+00	0.000E+00	0.000E+00	0.000E+00	0.000E+00	0.000E+00	0.000E+00	0.000E+00	0.000E+00	0.000E+00	0.000E+00
GE 74	0.000E+00	0.000E+00	0.000E+00	0.000E+00	0.000E+00	0.000E+00	0.000E+00	0.000E+00	0.000E+00	0.000E+00	0.000E+00	0.000E+00
CO 75	0.000E+00	0.000E+00	0.000E+00	0.000E+00	0.000E+00	0.000E+00	0.000E+00	0.000E+00	0.000E+00	0.000E+00	0.000E+00	0.000E+00
NI 75	0.000E+00	0.000E+00	0.000E+00	0.000E+00	0.000E+00	0.000E+00	0.000E+00	0.000E+00	0.000E+00	0.000E+00	0.000E+00	0.000E+00
CU 75	0.000E+00	0.000E+00	0.000E+00	0.000E+00	0.000E+00	0.000E+00	0.000E+00	0.000E+00	0.000E+00	0.000E+00	0.000E+00	0.000E+00
ZN 75	0.000E+00	0.000E+00	0.000E+00	0.000E+00	0.000E+00	0.000E+00	0.000E+00	0.000E+00	0.000E+00	0.000E+00	0.000E+00	0.000E+00
GA 75	0.000E+00	0.000E+00	0.000E+00	0.000E+00	0.000E+00	0.000E+00	0.000E+00	0.000E+00	0.000E+00	0.000E+00	0.000E+00	0.000E+00
GE 75	0.000E+00	0.000E+00	0.000E+00	0.000E+00	0.000E+00	0.000E+00	0.000E+00	0.000E+00	0.000E+00	0.000E+00	0.000E+00	0.000E+00
GE 75M	0.000E+00	0.000E+00	0.000E+00	0.000E+00	0.000E+00	0.000E+00	0.000E+00	0.000E+00	0.000E+00	0.000E+00	0.000E+00	0.000E+00
AS 75	0.000E+00	0.000E+00	0.000E+00	0.000E+00	0.000E+00	0.000E+00	0.000E+00	0.000E+00	0.000E+00	0.000E+00	0.000E+00	0.000E+00
NI 76	0.000E+00	0.000E+00	0.000E+00	0.000E+00	0.000E+00	0.000E+00	0.000E+00	0.000E+00	0.000E+00	0.000E+00	0.000E+00	0.000E+00

1 OUTPUT UNIT = 11 PAGE 3

ORIGEN2 V2.1 (8-1-91), Run on 03/10/04 at 13:15:17

* Decay of containment activity on a per cc basis

\+ FISSION PRODUCTS

POWER= 1.00000E+00 MW, BURNUP= 1.00000E+00 MWD, FLUX= 1.00E+00 N/CM**2-SEC

0 5 NUCLIDE TABLE: CONCENTRATIONS, GRAMS

	0 HR	1 HR	2 HR	4 HR	8 HR	12 HR	24 HR	48 HR	72 HR	96 HR	144 HR	288 HR
CU 76	0.000E+00	0.000E+00	0.000E+00	0.000E+00	0.000E+00	0.000E+00	0.000E+00	0.000E+00	0.000E+00	0.000E+00	0.000E+00	0.000E+00
ZN 76	0.000E+00	0.000E+00	0.000E+00	0.000E+00	0.000E+00	0.000E+00	0.000E+00	0.000E+00	0.000E+00	0.000E+00	0.000E+00	0.000E+00
GA 76	0.000E+00	0.000E+00	0.000E+00	0.000E+00	0.000E+00	0.000E+00	0.000E+00	0.000E+00	0.000E+00	0.000E+00	0.000E+00	0.000E+00
GE 76	0.000E+00	0.000E+00	0.000E+00	0.000E+00	0.000E+00	0.000E+00	0.000E+00	0.000E+00	0.000E+00	0.000E+00	0.000E+00	0.000E+00
AS 76	0.000E+00	0.000E+00	0.000E+00	0.000E+00	0.000E+00	0.000E+00	0.000E+00	0.000E+00	0.000E+00	0.000E+00	0.000E+00	0.000E+00
SE 76	0.000E+00	0.000E+00	0.000E+00	0.000E+00	0.000E+00	0.000E+00	0.000E+00	0.000E+00	0.000E+00	0.000E+00	0.000E+00	0.000E+00
NI 77	0.000E+00	0.000E+00	0.000E+00	0.000E+00	0.000E+00	0.000E+00	0.000E+00	0.000E+00	0.000E+00	0.000E+00	0.000E+00	0.000E+00
CU 77	0.000E+00	0.000E+00	0.000E+00	0.000E+00	0.000E+00	0.000E+00	0.000E+00	0.000E+00	0.000E+00	0.000E+00	0.000E+00	0.000E+00
ZN 77	0.000E+00	0.000E+00	0.000E+00	0.000E+00	0.000E+00	0.000E+00	0.000E+00	0.000E+00	0.000E+00	0.000E+00	0.000E+00	0.000E+00
GA 77	0.000E+00	0.000E+00	0.000E+00	0.000E+00	0.000E+00	0.000E+00	0.000E+00	0.000E+00	0.000E+00	0.000E+00	0.000E+00	0.000E+00
GE 77	0.000E+00	0.000E+00	0.000E+00	0.000E+00	0.000E+00	0.000E+00	0.000E+00	0.000E+00	0.000E+00	0.000E+00	0.000E+00	0.000E+00
GE 77M	0.000E+00	0.000E+00	0.000E+00	0.000E+00	0.000E+00	0.000E+00	0.000E+00	0.000E+00	0.000E+00	0.000E+00	0.000E+00	0.000E+00
AS 77	0.000E+00	0.000E+00	0.000E+00	0.000E+00	0.000E+00	0.000E+00	0.000E+00	0.000E+00	0.000E+00	0.000E+00	0.000E+00	0.000E+00
SE 77	0.000E+00	0.000E+00	0.000E+00	0.000E+00	0.000E+00	0.000E+00	0.000E+00	0.000E+00	0.000E+00	0.000E+00	0.000E+00	0.000E+00
SE 77M	0.000E+00	0.000E+00	0.000E+00	0.000E+00	0.000E+00	0.000E+00	0.000E+00	0.000E+00	0.000E+00	0.000E+00	0.000E+00	0.000E+00
NI 78	0.000E+00	0.000E+00	0.000E+00	0.000E+00	0.000E+00	0.000E+00	0.000E+00	0.000E+00	0.000E+00	0.000E+00	0.000E+00	0.000E+00
CU 78	0.000E+00	0.000E+00	0.000E+00	0.000E+00	0.000E+00	0.000E+00	0.000E+00	0.000E+00	0.000E+00	0.000E+00	0.000E+00	0.000E+00
ZN 78	0.000E+00	0.000E+00	0.000E+00	0.000E+00	0.000E+00	0.000E+00	0.000E+00	0.000E+00	0.000E+00	0.000E+00	0.000E+00	0.000E+00
GA 78	0.000E+00	0.000E+00	0.000E+00	0.000E+00	0.000E+00	0.000E+00	0.000E+00	0.000E+00	0.000E+00	0.000E+00	0.000E+00	0.000E+00
GE 78	0.000E+00	0.000E+00	0.000E+00	0.000E+00	0.000E+00	0.000E+00	0.000E+00	0.000E+00	0.000E+00	0.000E+00	0.000E+00	0.000E+00
AS 78	0.000E+00	0.000E+00	0.000E+00	0.000E+00	0.000E+00	0.000E+00	0.000E+00	0.000E+00	0.000E+00	0.000E+00	0.000E+00	0.000E+00
SE 78	0.000E+00	0.000E+00	0.000E+00	0.000E+00	0.000E+00	0.000E+00	0.000E+00	0.000E+00	0.000E+00	0.000E+00	0.000E+00	0.000E+00
CU 79	0.000E+00	0.000E+00	0.000E+00	0.000E+00	0.000E+00	0.000E+00	0.000E+00	0.000E+00	0.000E+00	0.000E+00	0.000E+00	0.000E+00
ZN 79	0.000E+00	0.000E+00	0.000E+00	0.000E+00	0.000E+00	0.000E+00	0.000E+00	0.000E+00	0.000E+00	0.000E+00	0.000E+00	0.000E+00
GA 79	0.000E+00	0.000E+00	0.000E+00	0.000E+00	0.000E+00	0.000E+00	0.000E+00	0.000E+00	0.000E+00	0.000E+00	0.000E+00	0.000E+00
GE 79	0.000E+00	0.000E+00	0.000E+00	0.000E+00	0.000E+00	0.000E+00	0.000E+00	0.000E+00	0.000E+00	0.000E+00	0.000E+00	0.000E+00

AS 79	0.000E+00	0.000E+00	0.000E+00	0.000E+00	0.000E+00	0.000E+00	0.000E+00	0.000E+00	0.000E+00	0.000E+00	0.000E+00	0.000E+00
SE 79	0.000E+00	0.000E+00	0.000E+00	0.000E+00	0.000E+00	0.000E+00	0.000E+00	0.000E+00	0.000E+00	0.000E+00	0.000E+00	0.000E+00
SE 79M	0.000E+00	0.000E+00	0.000E+00	0.000E+00	0.000E+00	0.000E+00	0.000E+00	0.000E+00	0.000E+00	0.000E+00	0.000E+00	0.000E+00
BR 79	0.000E+00	0.000E+00	0.000E+00	0.000E+00	0.000E+00	0.000E+00	0.000E+00	0.000E+00	0.000E+00	0.000E+00	0.000E+00	0.000E+00
BR 79M	0.000E+00	0.000E+00	0.000E+00	0.000E+00	0.000E+00	0.000E+00	0.000E+00	0.000E+00	0.000E+00	0.000E+00	0.000E+00	0.000E+00
KR 79	0.000E+00	0.000E+00	0.000E+00	0.000E+00	0.000E+00	0.000E+00	0.000E+00	0.000E+00	0.000E+00	0.000E+00	0.000E+00	0.000E+00
CU 80	0.000E+00	0.000E+00	0.000E+00	0.000E+00	0.000E+00	0.000E+00	0.000E+00	0.000E+00	0.000E+00	0.000E+00	0.000E+00	0.000E+00
ZN 80	0.000E+00	0.000E+00	0.000E+00	0.000E+00	0.000E+00	0.000E+00	0.000E+00	0.000E+00	0.000E+00	0.000E+00	0.000E+00	0.000E+00
GA 80	0.000E+00	0.000E+00	0.000E+00	0.000E+00	0.000E+00	0.000E+00	0.000E+00	0.000E+00	0.000E+00	0.000E+00	0.000E+00	0.000E+00
GE 80	0.000E+00	0.000E+00	0.000E+00	0.000E+00	0.000E+00	0.000E+00	0.000E+00	0.000E+00	0.000E+00	0.000E+00	0.000E+00	0.000E+00
AS 80	0.000E+00	0.000E+00	0.000E+00	0.000E+00	0.000E+00	0.000E+00	0.000E+00	0.000E+00	0.000E+00	0.000E+00	0.000E+00	0.000E+00
SE 80	0.000E+00	0.000E+00	0.000E+00	0.000E+00	0.000E+00	0.000E+00	0.000E+00	0.000E+00	0.000E+00	0.000E+00	0.000E+00	0.000E+00
BR 80	0.000E+00	0.000E+00	0.000E+00	0.000E+00	0.000E+00	0.000E+00	0.000E+00	0.000E+00	0.000E+00	0.000E+00	0.000E+00	0.000E+00
BR 80M	0.000E+00	0.000E+00	0.000E+00	0.000E+00	0.000E+00	0.000E+00	0.000E+00	0.000E+00	0.000E+00	0.000E+00	0.000E+00	0.000E+00
KR 80	0.000E+00	0.000E+00	0.000E+00	0.000E+00	0.000E+00	0.000E+00	0.000E+00	0.000E+00	0.000E+00	0.000E+00	0.000E+00	0.000E+00
CU 81	0.000E+00	0.000E+00	0.000E+00	0.000E+00	0.000E+00	0.000E+00	0.000E+00	0.000E+00	0.000E+00	0.000E+00	0.000E+00	0.000E+00
ZN 81	0.000E+00	0.000E+00	0.000E+00	0.000E+00	0.000E+00	0.000E+00	0.000E+00	0.000E+00	0.000E+00	0.000E+00	0.000E+00	0.000E+00
GA 81	0.000E+00	0.000E+00	0.000E+00	0.000E+00	0.000E+00	0.000E+00	0.000E+00	0.000E+00	0.000E+00	0.000E+00	0.000E+00	0.000E+00
GE 81	0.000E+00	0.000E+00	0.000E+00	0.000E+00	0.000E+00	0.000E+00	0.000E+00	0.000E+00	0.000E+00	0.000E+00	0.000E+00	0.000E+00
AS 81	0.000E+00	0.000E+00	0.000E+00	0.000E+00	0.000E+00	0.000E+00	0.000E+00	0.000E+00	0.000E+00	0.000E+00	0.000E+00	0.000E+00
SE 81	0.000E+00	0.000E+00	0.000E+00	0.000E+00	0.000E+00	0.000E+00	0.000E+00	0.000E+00	0.000E+00	0.000E+00	0.000E+00	0.000E+00
SE 81M	0.000E+00	0.000E+00	0.000E+00	0.000E+00	0.000E+00	0.000E+00	0.000E+00	0.000E+00	0.000E+00	0.000E+00	0.000E+00	0.000E+00
BR 81	0.000E+00	0.000E+00	0.000E+00	0.000E+00	0.000E+00	0.000E+00	0.000E+00	0.000E+00	0.000E+00	0.000E+00	0.000E+00	0.000E+00
KR 81	0.000E+00	0.000E+00	0.000E+00	0.000E+00	0.000E+00	0.000E+00	0.000E+00	0.000E+00	0.000E+00	0.000E+00	0.000E+00	0.000E+00
KR 81M	0.000E+00	0.000E+00	0.000E+00	0.000E+00	0.000E+00	0.000E+00	0.000E+00	0.000E+00	0.000E+00	0.000E+00	0.000E+00	0.000E+00

1 OUTPUT UNIT = 11 PAGE 4

ORIGEN2 V2.1 (8-1-91), Run on 03/10/04 at 13:15:17

* Decay of containment activity on a per cc basis

\+ FISSION PRODUCTS

POWER= 1.00000E+00 MW, BURNUP= 1.00000E+00 MWD, FLUX= 1.00E+00 N/CM**2-SEC

0 5 NUCLIDE TABLE: CONCENTRATIONS, GRAMS

	0 HR	1 HR	2 HR	4 HR	8 HR	12 HR	24 HR	48 HR	72 HR	96 HR	144 HR	288 HR
ZN 82	0.000E+00	0.000E+00	0.000E+00	0.000E+00	0.000E+00	0.000E+00	0.000E+00	0.000E+00	0.000E+00	0.000E+00	0.000E+00	0.000E+00
GA 82	0.000E+00	0.000E+00	0.000E+00	0.000E+00	0.000E+00	0.000E+00	0.000E+00	0.000E+00	0.000E+00	0.000E+00	0.000E+00	0.000E+00
GE 82	0.000E+00	0.000E+00	0.000E+00	0.000E+00	0.000E+00	0.000E+00	0.000E+00	0.000E+00	0.000E+00	0.000E+00	0.000E+00	0.000E+00
AS 82	0.000E+00	0.000E+00	0.000E+00	0.000E+00	0.000E+00	0.000E+00	0.000E+00	0.000E+00	0.000E+00	0.000E+00	0.000E+00	0.000E+00
AS 82M	0.000E+00	0.000E+00	0.000E+00	0.000E+00	0.000E+00	0.000E+00	0.000E+00	0.000E+00	0.000E+00	0.000E+00	0.000E+00	0.000E+00
SE 82	0.000E+00	0.000E+00	0.000E+00	0.000E+00	0.000E+00	0.000E+00	0.000E+00	0.000E+00	0.000E+00	0.000E+00	0.000E+00	0.000E+00
BR 82	0.000E+00	0.000E+00	0.000E+00	0.000E+00	0.000E+00	0.000E+00	0.000E+00	0.000E+00	0.000E+00	0.000E+00	0.000E+00	0.000E+00
BR 82M	0.000E+00	0.000E+00	0.000E+00	0.000E+00	0.000E+00	0.000E+00	0.000E+00	0.000E+00	0.000E+00	0.000E+00	0.000E+00	0.000E+00
KR 82	0.000E+00	0.000E+00	0.000E+00	0.000E+00	0.000E+00	0.000E+00	0.000E+00	0.000E+00	0.000E+00	0.000E+00	0.000E+00	0.000E+00
ZN 83	0.000E+00	0.000E+00	0.000E+00	0.000E+00	0.000E+00	0.000E+00	0.000E+00	0.000E+00	0.000E+00	0.000E+00	0.000E+00	0.000E+00
GA 83	0.000E+00	0.000E+00	0.000E+00	0.000E+00	0.000E+00	0.000E+00	0.000E+00	0.000E+00	0.000E+00	0.000E+00	0.000E+00	0.000E+00
GE 83	0.000E+00	0.000E+00	0.000E+00	0.000E+00	0.000E+00	0.000E+00	0.000E+00	0.000E+00	0.000E+00	0.000E+00	0.000E+00	0.000E+00
AS 83	0.000E+00	0.000E+00	0.000E+00	0.000E+00	0.000E+00	0.000E+00	0.000E+00	0.000E+00	0.000E+00	0.000E+00	0.000E+00	0.000E+00
SE 83	0.000E+00	0.000E+00	0.000E+00	0.000E+00	0.000E+00	0.000E+00	0.000E+00	0.000E+00	0.000E+00	0.000E+00	0.000E+00	0.000E+00
SE 83M	0.000E+00	0.000E+00	0.000E+00	0.000E+00	0.000E+00	0.000E+00	0.000E+00	0.000E+00	0.000E+00	0.000E+00	0.000E+00	0.000E+00
BR 83	0.000E+00	0.000E+00	0.000E+00	0.000E+00	0.000E+00	0.000E+00	0.000E+00	0.000E+00	0.000E+00	0.000E+00	0.000E+00	0.000E+00
KR 83	0.000E+00	0.000E+00	0.000E+00	0.000E+00	0.000E+00	0.000E+00	0.000E+00	0.000E+00	0.000E+00	0.000E+00	0.000E+00	0.000E+00
KR 83M	0.000E+00	0.000E+00	0.000E+00	0.000E+00	0.000E+00	0.000E+00	0.000E+00	0.000E+00	0.000E+00	0.000E+00	0.000E+00	0.000E+00
GA 84	0.000E+00	0.000E+00	0.000E+00	0.000E+00	0.000E+00	0.000E+00	0.000E+00	0.000E+00	0.000E+00	0.000E+00	0.000E+00	0.000E+00
GE 84	0.000E+00	0.000E+00	0.000E+00	0.000E+00	0.000E+00	0.000E+00	0.000E+00	0.000E+00	0.000E+00	0.000E+00	0.000E+00	0.000E+00
AS 84	0.000E+00	0.000E+00	0.000E+00	0.000E+00	0.000E+00	0.000E+00	0.000E+00	0.000E+00	0.000E+00	0.000E+00	0.000E+00	0.000E+00
SE 84	0.000E+00	0.000E+00	0.000E+00	0.000E+00	0.000E+00	0.000E+00	0.000E+00	0.000E+00	0.000E+00	0.000E+00	0.000E+00	0.000E+00
BR 84	0.000E+00	0.000E+00	0.000E+00	0.000E+00	0.000E+00	0.000E+00	0.000E+00	0.000E+00	0.000E+00	0.000E+00	0.000E+00	0.000E+00
BR 84M	0.000E+00	0.000E+00	0.000E+00	0.000E+00	0.000E+00	0.000E+00	0.000E+00	0.000E+00	0.000E+00	0.000E+00	0.000E+00	0.000E+00

KR 84	0.000E+00	0.000E+00	0.000E+00	0.000E+00	0.000E+00	0.000E+00	0.000E+00	0.000E+00	0.000E+00	0.000E+00	0.000E+00	0.000E+00
GA 85	0.000E+00	0.000E+00	0.000E+00	0.000E+00	0.000E+00	0.000E+00	0.000E+00	0.000E+00	0.000E+00	0.000E+00	0.000E+00	0.000E+00
GE 85	0.000E+00	0.000E+00	0.000E+00	0.000E+00	0.000E+00	0.000E+00	0.000E+00	0.000E+00	0.000E+00	0.000E+00	0.000E+00	0.000E+00
AS 85	0.000E+00	0.000E+00	0.000E+00	0.000E+00	0.000E+00	0.000E+00	0.000E+00	0.000E+00	0.000E+00	0.000E+00	0.000E+00	0.000E+00
SE 85	0.000E+00	0.000E+00	0.000E+00	0.000E+00	0.000E+00	0.000E+00	0.000E+00	0.000E+00	0.000E+00	0.000E+00	0.000E+00	0.000E+00
SE 85M	0.000E+00	0.000E+00	0.000E+00	0.000E+00	0.000E+00	0.000E+00	0.000E+00	0.000E+00	0.000E+00	0.000E+00	0.000E+00	0.000E+00
BR 85	0.000E+00	0.000E+00	0.000E+00	0.000E+00	0.000E+00	0.000E+00	0.000E+00	0.000E+00	0.000E+00	0.000E+00	0.000E+00	0.000E+00
KR 85	1.300E-08	1.300E-08	1.300E-08	1.300E-08	1.300E-08	1.300E-08	1.300E-08	1.300E-08	1.299E-08	1.299E-08	1.299E-08	1.297E-08
KR 85M	6.790E-12	5.817E-12	4.983E-12	3.657E-12	1.970E-12	1.061E-12	1.657E-13	4.045E-15	9.874E-17	2.410E-18	1.436E-21	3.036E-31
RB 85	0.000E+00	8.637E-13	1.617E-12	2.855E-12	4.570E-12	5.671E-12	7.528E-12	9.956E-12	1.226E-11	1.456E-11	1.916E-11	3.295E-11
GE 86	0.000E+00	0.000E+00	0.000E+00	0.000E+00	0.000E+00	0.000E+00	0.000E+00	0.000E+00	0.000E+00	0.000E+00	0.000E+00	0.000E+00
AS 86	0.000E+00	0.000E+00	0.000E+00	0.000E+00	0.000E+00	0.000E+00	0.000E+00	0.000E+00	0.000E+00	0.000E+00	0.000E+00	0.000E+00
SE 86	0.000E+00	0.000E+00	0.000E+00	0.000E+00	0.000E+00	0.000E+00	0.000E+00	0.000E+00	0.000E+00	0.000E+00	0.000E+00	0.000E+00
BR 86	0.000E+00	0.000E+00	0.000E+00	0.000E+00	0.000E+00	0.000E+00	0.000E+00	0.000E+00	0.000E+00	0.000E+00	0.000E+00	0.000E+00
BR 86M	0.000E+00	0.000E+00	0.000E+00	0.000E+00	0.000E+00	0.000E+00	0.000E+00	0.000E+00	0.000E+00	0.000E+00	0.000E+00	0.000E+00
KR 86	0.000E+00	0.000E+00	0.000E+00	0.000E+00	0.000E+00	0.000E+00	0.000E+00	0.000E+00	0.000E+00	0.000E+00	0.000E+00	0.000E+00
RB 86	1.290E-11	1.288E-11	1.286E-11	1.282E-11	1.274E-11	1.266E-11	1.243E-11	1.198E-11	1.154E-11	1.112E-11	1.032E-11	8.260E-12
RB 86M	0.000E+00	0.000E+00	0.000E+00	0.000E+00	0.000E+00	0.000E+00	0.000E+00	0.000E+00	0.000E+00	0.000E+00	0.000E+00	0.000E+00
SR 86	0.000E+00	1.995E-14	3.988E-14	7.963E-14	1.588E-13	2.374E-13	4.705E-13	9.238E-13	1.361E-12	1.781E-12	2.578E-12	4.640E-12
GE 87	0.000E+00	0.000E+00	0.000E+00	0.000E+00	0.000E+00	0.000E+00	0.000E+00	0.000E+00	0.000E+00	0.000E+00	0.000E+00	0.000E+00
AS 87	0.000E+00	0.000E+00	0.000E+00	0.000E+00	0.000E+00	0.000E+00	0.000E+00	0.000E+00	0.000E+00	0.000E+00	0.000E+00	0.000E+00
SE 87	0.000E+00	0.000E+00	0.000E+00	0.000E+00	0.000E+00	0.000E+00	0.000E+00	0.000E+00	0.000E+00	0.000E+00	0.000E+00	0.000E+00
BR 87	0.000E+00	0.000E+00	0.000E+00	0.000E+00	0.000E+00	0.000E+00	0.000E+00	0.000E+00	0.000E+00	0.000E+00	0.000E+00	0.000E+00
KR 87	3.810E-12	2.209E-12	1.281E-12	4.306E-13	4.866E-14	5.499E-15	7.913E-18	1.648E-23	3.433E-29	7.152E-35	0.000E+00	0.000E+00
RB 87	0.000E+00	1.601E-12	2.529E-12	3.379E-12	3.761E-12	3.805E-12	3.810E-12	3.810E-12	3.810E-12	3.810E-12	3.810E-12	3.810E-12
SR 87	0.000E+00	0.000E+00	0.000E+00	0.000E+00	0.000E+00	0.000E+00	0.000E+00	0.000E+00	0.000E+00	0.000E+00	0.000E+00	0.000E+00
SR 87M	0.000E+00	0.000E+00	0.000E+00	0.000E+00	0.000E+00	0.000E+00	0.000E+00	0.000E+00	0.000E+00	0.000E+00	0.000E+00	0.000E+00

1 OUTPUT UNIT = 11 PAGE 5

ORIGEN2 V2.1 (8-1-91), Run on 03/10/04 at 13:15:17

* Decay of containment activity on a per cc basis

\+ FISSION PRODUCTS

POWER= 1.00000E+00 MW, BURNUP= 1.00000E+00 MWD, FLUX= 1.00E+00 N/CM**2-SEC

0 5 NUCLIDE TABLE: CONCENTRATIONS, GRAMS

	0 HR	1 HR	2 HR	4 HR	8 HR	12 HR	24 HR	48 HR	72 HR	96 HR	144 HR	288 HR
GE 88	0.000E+00	0.000E+00	0.000E+00	0.000E+00	0.000E+00	0.000E+00	0.000E+00	0.000E+00	0.000E+00	0.000E+00	0.000E+00	0.000E+00
AS 88	0.000E+00	0.000E+00	0.000E+00	0.000E+00	0.000E+00	0.000E+00	0.000E+00	0.000E+00	0.000E+00	0.000E+00	0.000E+00	0.000E+00
SE 88	0.000E+00	0.000E+00	0.000E+00	0.000E+00	0.000E+00	0.000E+00	0.000E+00	0.000E+00	0.000E+00	0.000E+00	0.000E+00	0.000E+00
BR 88	0.000E+00	0.000E+00	0.000E+00	0.000E+00	0.000E+00	0.000E+00	0.000E+00	0.000E+00	0.000E+00	0.000E+00	0.000E+00	0.000E+00
KR 88	1.210E-11	9.479E-12	7.425E-12	4.557E-12	1.716E-12	6.461E-13	3.450E-14	9.834E-17	2.802E-19	8.037E-22	6.536E-27	3.453E-42
RB 88	0.000E+00	9.696E-13	8.533E-13	5.316E-13	2.003E-13	7.542E-14	4.027E-15	1.148E-17	3.272E-20	9.373E-23	7.627E-28	3.699E-43
SR 88	0.000E+00	1.652E-12	3.821E-12	7.012E-12	1.018E-11	1.138E-11	1.206E-11	1.210E-11	1.210E-11	1.210E-11	1.210E-11	1.210E-11
AS 89	0.000E+00	0.000E+00	0.000E+00	0.000E+00	0.000E+00	0.000E+00	0.000E+00	0.000E+00	0.000E+00	0.000E+00	0.000E+00	0.000E+00
SE 89	0.000E+00	0.000E+00	0.000E+00	0.000E+00	0.000E+00	0.000E+00	0.000E+00	0.000E+00	0.000E+00	0.000E+00	0.000E+00	0.000E+00
BR 89	0.000E+00	0.000E+00	0.000E+00	0.000E+00	0.000E+00	0.000E+00	0.000E+00	0.000E+00	0.000E+00	0.000E+00	0.000E+00	0.000E+00
KR 89	0.000E+00	0.000E+00	0.000E+00	0.000E+00	0.000E+00	0.000E+00	0.000E+00	0.000E+00	0.000E+00	0.000E+00	0.000E+00	0.000E+00
RB 89	0.000E+00	0.000E+00	0.000E+00	0.000E+00	0.000E+00	0.000E+00	0.000E+00	0.000E+00	0.000E+00	0.000E+00	0.000E+00	0.000E+00
SR 89	0.000E+00	0.000E+00	0.000E+00	0.000E+00	0.000E+00	0.000E+00	0.000E+00	0.000E+00	0.000E+00	0.000E+00	0.000E+00	0.000E+00
Y 89	0.000E+00	0.000E+00	0.000E+00	0.000E+00	0.000E+00	0.000E+00	0.000E+00	0.000E+00	0.000E+00	0.000E+00	0.000E+00	0.000E+00
Y 89M	0.000E+00	0.000E+00	0.000E+00	0.000E+00	0.000E+00	0.000E+00	0.000E+00	0.000E+00	0.000E+00	0.000E+00	0.000E+00	0.000E+00
AS 90	0.000E+00	0.000E+00	0.000E+00	0.000E+00	0.000E+00	0.000E+00	0.000E+00	0.000E+00	0.000E+00	0.000E+00	0.000E+00	0.000E+00
SE 90	0.000E+00	0.000E+00	0.000E+00	0.000E+00	0.000E+00	0.000E+00	0.000E+00	0.000E+00	0.000E+00	0.000E+00	0.000E+00	0.000E+00
BR 90	0.000E+00	0.000E+00	0.000E+00	0.000E+00	0.000E+00	0.000E+00	0.000E+00	0.000E+00	0.000E+00	0.000E+00	0.000E+00	0.000E+00
KR 90	0.000E+00	0.000E+00	0.000E+00	0.000E+00	0.000E+00	0.000E+00	0.000E+00	0.000E+00	0.000E+00	0.000E+00	0.000E+00	0.000E+00
RB 90	0.000E+00	0.000E+00	0.000E+00	0.000E+00	0.000E+00	0.000E+00	0.000E+00	0.000E+00	0.000E+00	0.000E+00	0.000E+00	0.000E+00
RB 90M	0.000E+00	0.000E+00	0.000E+00	0.000E+00	0.000E+00	0.000E+00	0.000E+00	0.000E+00	0.000E+00	0.000E+00	0.000E+00	0.000E+00
SR 90	0.000E+00	0.000E+00	0.000E+00	0.000E+00	0.000E+00	0.000E+00	0.000E+00	0.000E+00	0.000E+00	0.000E+00	0.000E+00	0.000E+00

Y 90	0.000E+00	0.000E+00	0.000E+00	0.000E+00	0.000E+00	0.000E+00	0.000E+00	0.000E+00	0.000E+00	0.000E+00	0.000E+00	0.000E+00
Y 90M	0.000E+00	0.000E+00	0.000E+00	0.000E+00	0.000E+00	0.000E+00	0.000E+00	0.000E+00	0.000E+00	0.000E+00	0.000E+00	0.000E+00
ZR 90	0.000E+00	0.000E+00	0.000E+00	0.000E+00	0.000E+00	0.000E+00	0.000E+00	0.000E+00	0.000E+00	0.000E+00	0.000E+00	0.000E+00
ZR 90M	0.000E+00	0.000E+00	0.000E+00	0.000E+00	0.000E+00	0.000E+00	0.000E+00	0.000E+00	0.000E+00	0.000E+00	0.000E+00	0.000E+00
SE 91	0.000E+00	0.000E+00	0.000E+00	0.000E+00	0.000E+00	0.000E+00	0.000E+00	0.000E+00	0.000E+00	0.000E+00	0.000E+00	0.000E+00
BR 91	0.000E+00	0.000E+00	0.000E+00	0.000E+00	0.000E+00	0.000E+00	0.000E+00	0.000E+00	0.000E+00	0.000E+00	0.000E+00	0.000E+00
KR 91	0.000E+00	0.000E+00	0.000E+00	0.000E+00	0.000E+00	0.000E+00	0.000E+00	0.000E+00	0.000E+00	0.000E+00	0.000E+00	0.000E+00
RB 91	0.000E+00	0.000E+00	0.000E+00	0.000E+00	0.000E+00	0.000E+00	0.000E+00	0.000E+00	0.000E+00	0.000E+00	0.000E+00	0.000E+00
SR 91	0.000E+00	0.000E+00	0.000E+00	0.000E+00	0.000E+00	0.000E+00	0.000E+00	0.000E+00	0.000E+00	0.000E+00	0.000E+00	0.000E+00
Y 91	0.000E+00	0.000E+00	0.000E+00	0.000E+00	0.000E+00	0.000E+00	0.000E+00	0.000E+00	0.000E+00	0.000E+00	0.000E+00	0.000E+00
Y 91M	0.000E+00	0.000E+00	0.000E+00	0.000E+00	0.000E+00	0.000E+00	0.000E+00	0.000E+00	0.000E+00	0.000E+00	0.000E+00	0.000E+00
ZR 91	0.000E+00	0.000E+00	0.000E+00	0.000E+00	0.000E+00	0.000E+00	0.000E+00	0.000E+00	0.000E+00	0.000E+00	0.000E+00	0.000E+00
NB 91	0.000E+00	0.000E+00	0.000E+00	0.000E+00	0.000E+00	0.000E+00	0.000E+00	0.000E+00	0.000E+00	0.000E+00	0.000E+00	0.000E+00
SE 92	0.000E+00	0.000E+00	0.000E+00	0.000E+00	0.000E+00	0.000E+00	0.000E+00	0.000E+00	0.000E+00	0.000E+00	0.000E+00	0.000E+00
BR 92	0.000E+00	0.000E+00	0.000E+00	0.000E+00	0.000E+00	0.000E+00	0.000E+00	0.000E+00	0.000E+00	0.000E+00	0.000E+00	0.000E+00
KR 92	0.000E+00	0.000E+00	0.000E+00	0.000E+00	0.000E+00	0.000E+00	0.000E+00	0.000E+00	0.000E+00	0.000E+00	0.000E+00	0.000E+00
RB 92	0.000E+00	0.000E+00	0.000E+00	0.000E+00	0.000E+00	0.000E+00	0.000E+00	0.000E+00	0.000E+00	0.000E+00	0.000E+00	0.000E+00
SR 92	0.000E+00	0.000E+00	0.000E+00	0.000E+00	0.000E+00	0.000E+00	0.000E+00	0.000E+00	0.000E+00	0.000E+00	0.000E+00	0.000E+00
Y 92	0.000E+00	0.000E+00	0.000E+00	0.000E+00	0.000E+00	0.000E+00	0.000E+00	0.000E+00	0.000E+00	0.000E+00	0.000E+00	0.000E+00
ZR 92	0.000E+00	0.000E+00	0.000E+00	0.000E+00	0.000E+00	0.000E+00	0.000E+00	0.000E+00	0.000E+00	0.000E+00	0.000E+00	0.000E+00
NB 92	0.000E+00	0.000E+00	0.000E+00	0.000E+00	0.000E+00	0.000E+00	0.000E+00	0.000E+00	0.000E+00	0.000E+00	0.000E+00	0.000E+00
SE 93	0.000E+00	0.000E+00	0.000E+00	0.000E+00	0.000E+00	0.000E+00	0.000E+00	0.000E+00	0.000E+00	0.000E+00	0.000E+00	0.000E+00
BR 93	0.000E+00	0.000E+00	0.000E+00	0.000E+00	0.000E+00	0.000E+00	0.000E+00	0.000E+00	0.000E+00	0.000E+00	0.000E+00	0.000E+00
KR 93	0.000E+00	0.000E+00	0.000E+00	0.000E+00	0.000E+00	0.000E+00	0.000E+00	0.000E+00	0.000E+00	0.000E+00	0.000E+00	0.000E+00
RB 93	0.000E+00	0.000E+00	0.000E+00	0.000E+00	0.000E+00	0.000E+00	0.000E+00	0.000E+00	0.000E+00	0.000E+00	0.000E+00	0.000E+00
SR 93	0.000E+00	0.000E+00	0.000E+00	0.000E+00	0.000E+00	0.000E+00	0.000E+00	0.000E+00	0.000E+00	0.000E+00	0.000E+00	0.000E+00
Y 93	0.000E+00	0.000E+00	0.000E+00	0.000E+00	0.000E+00	0.000E+00	0.000E+00	0.000E+00	0.000E+00	0.000E+00	0.000E+00	0.000E+00
ZR 93	0.000E+00	0.000E+00	0.000E+00	0.000E+00	0.000E+00	0.000E+00	0.000E+00	0.000E+00	0.000E+00	0.000E+00	0.000E+00	0.000E+00
NB 93	0.000E+00	0.000E+00	0.000E+00	0.000E+00	0.000E+00	0.000E+00	0.000E+00	0.000E+00	0.000E+00	0.000E+00	0.000E+00	0.000E+00

1 OUTPUT UNIT = 11 PAGE 6

ORIGEN2 V2.1 (8-1-91), Run on 03/10/04 at 13:15:17

* Decay of containment activity on a per cc basis

\+ FISSION PRODUCTS

POWER= 1.00000E+00 MW, BURNUP= 1.00000E+00 MWD, FLUX= 1.00E+00 N/CM**2-SEC

0 5 NUCLIDE TABLE: CONCENTRATIONS, GRAMS

	0 HR	1 HR	2 HR	4 HR	8 HR	12 HR	24 HR	48 HR	72 HR	96 HR	144 HR	288 HR
NB 93M	0.000E+00	0.000E+00	0.000E+00	0.000E+00	0.000E+00	0.000E+00	0.000E+00	0.000E+00	0.000E+00	0.000E+00	0.000E+00	0.000E+00
BR 94	0.000E+00	0.000E+00	0.000E+00	0.000E+00	0.000E+00	0.000E+00	0.000E+00	0.000E+00	0.000E+00	0.000E+00	0.000E+00	0.000E+00
KR 94	0.000E+00	0.000E+00	0.000E+00	0.000E+00	0.000E+00	0.000E+00	0.000E+00	0.000E+00	0.000E+00	0.000E+00	0.000E+00	0.000E+00
RB 94	0.000E+00	0.000E+00	0.000E+00	0.000E+00	0.000E+00	0.000E+00	0.000E+00	0.000E+00	0.000E+00	0.000E+00	0.000E+00	0.000E+00
SR 94	0.000E+00	0.000E+00	0.000E+00	0.000E+00	0.000E+00	0.000E+00	0.000E+00	0.000E+00	0.000E+00	0.000E+00	0.000E+00	0.000E+00
Y 94	0.000E+00	0.000E+00	0.000E+00	0.000E+00	0.000E+00	0.000E+00	0.000E+00	0.000E+00	0.000E+00	0.000E+00	0.000E+00	0.000E+00
ZR 94	0.000E+00	0.000E+00	0.000E+00	0.000E+00	0.000E+00	0.000E+00	0.000E+00	0.000E+00	0.000E+00	0.000E+00	0.000E+00	0.000E+00
NB 94	0.000E+00	0.000E+00	0.000E+00	0.000E+00	0.000E+00	0.000E+00	0.000E+00	0.000E+00	0.000E+00	0.000E+00	0.000E+00	0.000E+00
NB 94M	0.000E+00	0.000E+00	0.000E+00	0.000E+00	0.000E+00	0.000E+00	0.000E+00	0.000E+00	0.000E+00	0.000E+00	0.000E+00	0.000E+00
BR 95	0.000E+00	0.000E+00	0.000E+00	0.000E+00	0.000E+00	0.000E+00	0.000E+00	0.000E+00	0.000E+00	0.000E+00	0.000E+00	0.000E+00
KR 95	0.000E+00	0.000E+00	0.000E+00	0.000E+00	0.000E+00	0.000E+00	0.000E+00	0.000E+00	0.000E+00	0.000E+00	0.000E+00	0.000E+00
RB 95	0.000E+00	0.000E+00	0.000E+00	0.000E+00	0.000E+00	0.000E+00	0.000E+00	0.000E+00	0.000E+00	0.000E+00	0.000E+00	0.000E+00
SR 95	0.000E+00	0.000E+00	0.000E+00	0.000E+00	0.000E+00	0.000E+00	0.000E+00	0.000E+00	0.000E+00	0.000E+00	0.000E+00	0.000E+00
Y 95	0.000E+00	0.000E+00	0.000E+00	0.000E+00	0.000E+00	0.000E+00	0.000E+00	0.000E+00	0.000E+00	0.000E+00	0.000E+00	0.000E+00
ZR 95	0.000E+00	0.000E+00	0.000E+00	0.000E+00	0.000E+00	0.000E+00	0.000E+00	0.000E+00	0.000E+00	0.000E+00	0.000E+00	0.000E+00
NB 95	0.000E+00	0.000E+00	0.000E+00	0.000E+00	0.000E+00	0.000E+00	0.000E+00	0.000E+00	0.000E+00	0.000E+00	0.000E+00	0.000E+00
NB 95M	0.000E+00	0.000E+00	0.000E+00	0.000E+00	0.000E+00	0.000E+00	0.000E+00	0.000E+00	0.000E+00	0.000E+00	0.000E+00	0.000E+00
MO 95	0.000E+00	0.000E+00	0.000E+00	0.000E+00	0.000E+00	0.000E+00	0.000E+00	0.000E+00	0.000E+00	0.000E+00	0.000E+00	0.000E+00
BR 96	0.000E+00	0.000E+00	0.000E+00	0.000E+00	0.000E+00	0.000E+00	0.000E+00	0.000E+00	0.000E+00	0.000E+00	0.000E+00	0.000E+00
KR 96	0.000E+00	0.000E+00	0.000E+00	0.000E+00	0.000E+00	0.000E+00	0.000E+00	0.000E+00	0.000E+00	0.000E+00	0.000E+00	0.000E+00

RB 96	0.000E+00	0.000E+00	0.000E+00	0.000E+00	0.000E+00	0.000E+00	0.000E+00	0.000E+00	0.000E+00	0.000E+00	0.000E+00	0.000E+00
SR 96	0.000E+00	0.000E+00	0.000E+00	0.000E+00	0.000E+00	0.000E+00	0.000E+00	0.000E+00	0.000E+00	0.000E+00	0.000E+00	0.000E+00
Y 96	0.000E+00	0.000E+00	0.000E+00	0.000E+00	0.000E+00	0.000E+00	0.000E+00	0.000E+00	0.000E+00	0.000E+00	0.000E+00	0.000E+00
ZR 96	0.000E+00	0.000E+00	0.000E+00	0.000E+00	0.000E+00	0.000E+00	0.000E+00	0.000E+00	0.000E+00	0.000E+00	0.000E+00	0.000E+00
NB 96	0.000E+00	0.000E+00	0.000E+00	0.000E+00	0.000E+00	0.000E+00	0.000E+00	0.000E+00	0.000E+00	0.000E+00	0.000E+00	0.000E+00
MO 96	0.000E+00	0.000E+00	0.000E+00	0.000E+00	0.000E+00	0.000E+00	0.000E+00	0.000E+00	0.000E+00	0.000E+00	0.000E+00	0.000E+00
KR 97	0.000E+00	0.000E+00	0.000E+00	0.000E+00	0.000E+00	0.000E+00	0.000E+00	0.000E+00	0.000E+00	0.000E+00	0.000E+00	0.000E+00
RB 97	0.000E+00	0.000E+00	0.000E+00	0.000E+00	0.000E+00	0.000E+00	0.000E+00	0.000E+00	0.000E+00	0.000E+00	0.000E+00	0.000E+00
SR 97	0.000E+00	0.000E+00	0.000E+00	0.000E+00	0.000E+00	0.000E+00	0.000E+00	0.000E+00	0.000E+00	0.000E+00	0.000E+00	0.000E+00
Y 97	0.000E+00	0.000E+00	0.000E+00	0.000E+00	0.000E+00	0.000E+00	0.000E+00	0.000E+00	0.000E+00	0.000E+00	0.000E+00	0.000E+00
ZR 97	0.000E+00	0.000E+00	0.000E+00	0.000E+00	0.000E+00	0.000E+00	0.000E+00	0.000E+00	0.000E+00	0.000E+00	0.000E+00	0.000E+00
NB 97	0.000E+00	0.000E+00	0.000E+00	0.000E+00	0.000E+00	0.000E+00	0.000E+00	0.000E+00	0.000E+00	0.000E+00	0.000E+00	0.000E+00
NB 97M	0.000E+00	0.000E+00	0.000E+00	0.000E+00	0.000E+00	0.000E+00	0.000E+00	0.000E+00	0.000E+00	0.000E+00	0.000E+00	0.000E+00
MO 97	0.000E+00	0.000E+00	0.000E+00	0.000E+00	0.000E+00	0.000E+00	0.000E+00	0.000E+00	0.000E+00	0.000E+00	0.000E+00	0.000E+00
KR 98	0.000E+00	0.000E+00	0.000E+00	0.000E+00	0.000E+00	0.000E+00	0.000E+00	0.000E+00	0.000E+00	0.000E+00	0.000E+00	0.000E+00
RB 98	0.000E+00	0.000E+00	0.000E+00	0.000E+00	0.000E+00	0.000E+00	0.000E+00	0.000E+00	0.000E+00	0.000E+00	0.000E+00	0.000E+00
SR 98	0.000E+00	0.000E+00	0.000E+00	0.000E+00	0.000E+00	0.000E+00	0.000E+00	0.000E+00	0.000E+00	0.000E+00	0.000E+00	0.000E+00
Y 98	0.000E+00	0.000E+00	0.000E+00	0.000E+00	0.000E+00	0.000E+00	0.000E+00	0.000E+00	0.000E+00	0.000E+00	0.000E+00	0.000E+00
ZR 98	0.000E+00	0.000E+00	0.000E+00	0.000E+00	0.000E+00	0.000E+00	0.000E+00	0.000E+00	0.000E+00	0.000E+00	0.000E+00	0.000E+00
NB 98	0.000E+00	0.000E+00	0.000E+00	0.000E+00	0.000E+00	0.000E+00	0.000E+00	0.000E+00	0.000E+00	0.000E+00	0.000E+00	0.000E+00
NB 98M	0.000E+00	0.000E+00	0.000E+00	0.000E+00	0.000E+00	0.000E+00	0.000E+00	0.000E+00	0.000E+00	0.000E+00	0.000E+00	0.000E+00
MO 98	0.000E+00	0.000E+00	0.000E+00	0.000E+00	0.000E+00	0.000E+00	0.000E+00	0.000E+00	0.000E+00	0.000E+00	0.000E+00	0.000E+00
TC 98	0.000E+00	0.000E+00	0.000E+00	0.000E+00	0.000E+00	0.000E+00	0.000E+00	0.000E+00	0.000E+00	0.000E+00	0.000E+00	0.000E+00
RB 99	0.000E+00	0.000E+00	0.000E+00	0.000E+00	0.000E+00	0.000E+00	0.000E+00	0.000E+00	0.000E+00	0.000E+00	0.000E+00	0.000E+00
SR 99	0.000E+00	0.000E+00	0.000E+00	0.000E+00	0.000E+00	0.000E+00	0.000E+00	0.000E+00	0.000E+00	0.000E+00	0.000E+00	0.000E+00
Y 99	0.000E+00	0.000E+00	0.000E+00	0.000E+00	0.000E+00	0.000E+00	0.000E+00	0.000E+00	0.000E+00	0.000E+00	0.000E+00	0.000E+00
ZR 99	0.000E+00	0.000E+00	0.000E+00	0.000E+00	0.000E+00	0.000E+00	0.000E+00	0.000E+00	0.000E+00	0.000E+00	0.000E+00	0.000E+00
NB 99	0.000E+00	0.000E+00	0.000E+00	0.000E+00	0.000E+00	0.000E+00	0.000E+00	0.000E+00	0.000E+00	0.000E+00	0.000E+00	0.000E+00
NB 99M	0.000E+00	0.000E+00	0.000E+00	0.000E+00	0.000E+00	0.000E+00	0.000E+00	0.000E+00	0.000E+00	0.000E+00	0.000E+00	0.000E+00
MO 99	0.000E+00	0.000E+00	0.000E+00	0.000E+00	0.000E+00	0.000E+00	0.000E+00	0.000E+00	0.000E+00	0.000E+00	0.000E+00	0.000E+00
TC 99	0.000E+00	0.000E+00	0.000E+00	0.000E+00	0.000E+00	0.000E+00	0.000E+00	0.000E+00	0.000E+00	0.000E+00	0.000E+00	0.000E+00

```
1                                                                    OUTPUT UNIT = 11                                    PAGE     7
 ORIGEN2 V2.1 (8-1-91), Run on 03/10/04    at 13:15:17

     *  Decay of containment activity on a per cc basis
+                                                                                                   FISSION PRODUCTS
     POWER= 1.00000E+00 MW,  BURNUP= 1.00000E+00 MWD,  FLUX= 1.00E+00 N/CM**2-SEC
0                    5 NUCLIDE TABLE:  CONCENTRATIONS, GRAMS
```

	0 HR	1 HR	2 HR	4 HR	8 HR	12 HR	24 HR	48 HR	72 HR	96 HR	144 HR	288 HR
TC 99M	0.000E+00	0.000E+00	0.000E+00	0.000E+00	0.000E+00	0.000E+00	0.000E+00	0.000E+00	0.000E+00	0.000E+00	0.000E+00	0.000E+00
RU 99	0.000E+00	0.000E+00	0.000E+00	0.000E+00	0.000E+00	0.000E+00	0.000E+00	0.000E+00	0.000E+00	0.000E+00	0.000E+00	0.000E+00
RB100	0.000E+00	0.000E+00	0.000E+00	0.000E+00	0.000E+00	0.000E+00	0.000E+00	0.000E+00	0.000E+00	0.000E+00	0.000E+00	0.000E+00
SR100	0.000E+00	0.000E+00	0.000E+00	0.000E+00	0.000E+00	0.000E+00	0.000E+00	0.000E+00	0.000E+00	0.000E+00	0.000E+00	0.000E+00
Y100	0.000E+00	0.000E+00	0.000E+00	0.000E+00	0.000E+00	0.000E+00	0.000E+00	0.000E+00	0.000E+00	0.000E+00	0.000E+00	0.000E+00
ZR100	0.000E+00	0.000E+00	0.000E+00	0.000E+00	0.000E+00	0.000E+00	0.000E+00	0.000E+00	0.000E+00	0.000E+00	0.000E+00	0.000E+00
NB100	0.000E+00	0.000E+00	0.000E+00	0.000E+00	0.000E+00	0.000E+00	0.000E+00	0.000E+00	0.000E+00	0.000E+00	0.000E+00	0.000E+00
NB100M	0.000E+00	0.000E+00	0.000E+00	0.000E+00	0.000E+00	0.000E+00	0.000E+00	0.000E+00	0.000E+00	0.000E+00	0.000E+00	0.000E+00
MO100	0.000E+00	0.000E+00	0.000E+00	0.000E+00	0.000E+00	0.000E+00	0.000E+00	0.000E+00	0.000E+00	0.000E+00	0.000E+00	0.000E+00
TC100	0.000E+00	0.000E+00	0.000E+00	0.000E+00	0.000E+00	0.000E+00	0.000E+00	0.000E+00	0.000E+00	0.000E+00	0.000E+00	0.000E+00
RU100	0.000E+00	0.000E+00	0.000E+00	0.000E+00	0.000E+00	0.000E+00	0.000E+00	0.000E+00	0.000E+00	0.000E+00	0.000E+00	0.000E+00
RB101	0.000E+00	0.000E+00	0.000E+00	0.000E+00	0.000E+00	0.000E+00	0.000E+00	0.000E+00	0.000E+00	0.000E+00	0.000E+00	0.000E+00
SR101	0.000E+00	0.000E+00	0.000E+00	0.000E+00	0.000E+00	0.000E+00	0.000E+00	0.000E+00	0.000E+00	0.000E+00	0.000E+00	0.000E+00
Y101	0.000E+00	0.000E+00	0.000E+00	0.000E+00	0.000E+00	0.000E+00	0.000E+00	0.000E+00	0.000E+00	0.000E+00	0.000E+00	0.000E+00
ZR101	0.000E+00	0.000E+00	0.000E+00	0.000E+00	0.000E+00	0.000E+00	0.000E+00	0.000E+00	0.000E+00	0.000E+00	0.000E+00	0.000E+00
NB101	0.000E+00	0.000E+00	0.000E+00	0.000E+00	0.000E+00	0.000E+00	0.000E+00	0.000E+00	0.000E+00	0.000E+00	0.000E+00	0.000E+00
MO101	0.000E+00	0.000E+00	0.000E+00	0.000E+00	0.000E+00	0.000E+00	0.000E+00	0.000E+00	0.000E+00	0.000E+00	0.000E+00	0.000E+00
TC101	0.000E+00	0.000E+00	0.000E+00	0.000E+00	0.000E+00	0.000E+00	0.000E+00	0.000E+00	0.000E+00	0.000E+00	0.000E+00	0.000E+00

RU101	0.000E+00	0.000E+00	0.000E+00	0.000E+00	0.000E+00	0.000E+00	0.000E+00	0.000E+00	0.000E+00	0.000E+00	0.000E+00	0.000E+00
SR102	0.000E+00	0.000E+00	0.000E+00	0.000E+00	0.000E+00	0.000E+00	0.000E+00	0.000E+00	0.000E+00	0.000E+00	0.000E+00	0.000E+00
Y102	0.000E+00	0.000E+00	0.000E+00	0.000E+00	0.000E+00	0.000E+00	0.000E+00	0.000E+00	0.000E+00	0.000E+00	0.000E+00	0.000E+00
ZR102	0.000E+00	0.000E+00	0.000E+00	0.000E+00	0.000E+00	0.000E+00	0.000E+00	0.000E+00	0.000E+00	0.000E+00	0.000E+00	0.000E+00
NB102	0.000E+00	0.000E+00	0.000E+00	0.000E+00	0.000E+00	0.000E+00	0.000E+00	0.000E+00	0.000E+00	0.000E+00	0.000E+00	0.000E+00
MO102	0.000E+00	0.000E+00	0.000E+00	0.000E+00	0.000E+00	0.000E+00	0.000E+00	0.000E+00	0.000E+00	0.000E+00	0.000E+00	0.000E+00
TC102	0.000E+00	0.000E+00	0.000E+00	0.000E+00	0.000E+00	0.000E+00	0.000E+00	0.000E+00	0.000E+00	0.000E+00	0.000E+00	0.000E+00
TC102M	0.000E+00	0.000E+00	0.000E+00	0.000E+00	0.000E+00	0.000E+00	0.000E+00	0.000E+00	0.000E+00	0.000E+00	0.000E+00	0.000E+00
RU102	0.000E+00	0.000E+00	0.000E+00	0.000E+00	0.000E+00	0.000E+00	0.000E+00	0.000E+00	0.000E+00	0.000E+00	0.000E+00	0.000E+00
RH102	0.000E+00	0.000E+00	0.000E+00	0.000E+00	0.000E+00	0.000E+00	0.000E+00	0.000E+00	0.000E+00	0.000E+00	0.000E+00	0.000E+00
PD102	0.000E+00	0.000E+00	0.000E+00	0.000E+00	0.000E+00	0.000E+00	0.000E+00	0.000E+00	0.000E+00	0.000E+00	0.000E+00	0.000E+00
SR103	0.000E+00	0.000E+00	0.000E+00	0.000E+00	0.000E+00	0.000E+00	0.000E+00	0.000E+00	0.000E+00	0.000E+00	0.000E+00	0.000E+00
Y103	0.000E+00	0.000E+00	0.000E+00	0.000E+00	0.000E+00	0.000E+00	0.000E+00	0.000E+00	0.000E+00	0.000E+00	0.000E+00	0.000E+00
ZR103	0.000E+00	0.000E+00	0.000E+00	0.000E+00	0.000E+00	0.000E+00	0.000E+00	0.000E+00	0.000E+00	0.000E+00	0.000E+00	0.000E+00
NB103	0.000E+00	0.000E+00	0.000E+00	0.000E+00	0.000E+00	0.000E+00	0.000E+00	0.000E+00	0.000E+00	0.000E+00	0.000E+00	0.000E+00
MO103	0.000E+00	0.000E+00	0.000E+00	0.000E+00	0.000E+00	0.000E+00	0.000E+00	0.000E+00	0.000E+00	0.000E+00	0.000E+00	0.000E+00
TC103	0.000E+00	0.000E+00	0.000E+00	0.000E+00	0.000E+00	0.000E+00	0.000E+00	0.000E+00	0.000E+00	0.000E+00	0.000E+00	0.000E+00
RU103	0.000E+00	0.000E+00	0.000E+00	0.000E+00	0.000E+00	0.000E+00	0.000E+00	0.000E+00	0.000E+00	0.000E+00	0.000E+00	0.000E+00
RH103	0.000E+00	0.000E+00	0.000E+00	0.000E+00	0.000E+00	0.000E+00	0.000E+00	0.000E+00	0.000E+00	0.000E+00	0.000E+00	0.000E+00
RH103M	0.000E+00	0.000E+00	0.000E+00	0.000E+00	0.000E+00	0.000E+00	0.000E+00	0.000E+00	0.000E+00	0.000E+00	0.000E+00	0.000E+00
SR104	0.000E+00	0.000E+00	0.000E+00	0.000E+00	0.000E+00	0.000E+00	0.000E+00	0.000E+00	0.000E+00	0.000E+00	0.000E+00	0.000E+00
Y104	0.000E+00	0.000E+00	0.000E+00	0.000E+00	0.000E+00	0.000E+00	0.000E+00	0.000E+00	0.000E+00	0.000E+00	0.000E+00	0.000E+00
ZR104	0.000E+00	0.000E+00	0.000E+00	0.000E+00	0.000E+00	0.000E+00	0.000E+00	0.000E+00	0.000E+00	0.000E+00	0.000E+00	0.000E+00
NB104	0.000E+00	0.000E+00	0.000E+00	0.000E+00	0.000E+00	0.000E+00	0.000E+00	0.000E+00	0.000E+00	0.000E+00	0.000E+00	0.000E+00
MO104	0.000E+00	0.000E+00	0.000E+00	0.000E+00	0.000E+00	0.000E+00	0.000E+00	0.000E+00	0.000E+00	0.000E+00	0.000E+00	0.000E+00
TC104	0.000E+00	0.000E+00	0.000E+00	0.000E+00	0.000E+00	0.000E+00	0.000E+00	0.000E+00	0.000E+00	0.000E+00	0.000E+00	0.000E+00
RU104	0.000E+00	0.000E+00	0.000E+00	0.000E+00	0.000E+00	0.000E+00	0.000E+00	0.000E+00	0.000E+00	0.000E+00	0.000E+00	0.000E+00
RH104	0.000E+00	0.000E+00	0.000E+00	0.000E+00	0.000E+00	0.000E+00	0.000E+00	0.000E+00	0.000E+00	0.000E+00	0.000E+00	0.000E+00
RH104M	0.000E+00	0.000E+00	0.000E+00	0.000E+00	0.000E+00	0.000E+00	0.000E+00	0.000E+00	0.000E+00	0.000E+00	0.000E+00	0.000E+00
PD104	0.000E+00	0.000E+00	0.000E+00	0.000E+00	0.000E+00	0.000E+00	0.000E+00	0.000E+00	0.000E+00	0.000E+00	0.000E+00	0.000E+00
Y105	0.000E+00	0.000E+00	0.000E+00	0.000E+00	0.000E+00	0.000E+00	0.000E+00	0.000E+00	0.000E+00	0.000E+00	0.000E+00	0.000E+00
ZR105	0.000E+00	0.000E+00	0.000E+00	0.000E+00	0.000E+00	0.000E+00	0.000E+00	0.000E+00	0.000E+00	0.000E+00	0.000E+00	0.000E+00
NB105	0.000E+00	0.000E+00	0.000E+00	0.000E+00	0.000E+00	0.000E+00	0.000E+00	0.000E+00	0.000E+00	0.000E+00	0.000E+00	0.000E+00

1 OUTPUT UNIT = 11 PAGE 8

ORIGEN2 V2.1 (8-1-91), Run on 03/10/04 at 13:15:17

* Decay of containment activity on a per cc basis

\+ FISSION PRODUCTS

POWER= 1.00000E+00 MW, BURNUP= 1.00000E+00 MWD, FLUX= 1.00E+00 N/CM**2-SEC

0 5 NUCLIDE TABLE: CONCENTRATIONS, GRAMS

	0 HR	1 HR	2 HR	4 HR	8 HR	12 HR	24 HR	48 HR	72 HR	96 HR	144 HR	288 HR
MO105	0.000E+00	0.000E+00	0.000E+00	0.000E+00	0.000E+00	0.000E+00	0.000E+00	0.000E+00	0.000E+00	0.000E+00	0.000E+00	0.000E+00
TC105	0.000E+00	0.000E+00	0.000E+00	0.000E+00	0.000E+00	0.000E+00	0.000E+00	0.000E+00	0.000E+00	0.000E+00	0.000E+00	0.000E+00
RU105	0.000E+00	0.000E+00	0.000E+00	0.000E+00	0.000E+00	0.000E+00	0.000E+00	0.000E+00	0.000E+00	0.000E+00	0.000E+00	0.000E+00
RH105	0.000E+00	0.000E+00	0.000E+00	0.000E+00	0.000E+00	0.000E+00	0.000E+00	0.000E+00	0.000E+00	0.000E+00	0.000E+00	0.000E+00
RH105M	0.000E+00	0.000E+00	0.000E+00	0.000E+00	0.000E+00	0.000E+00	0.000E+00	0.000E+00	0.000E+00	0.000E+00	0.000E+00	0.000E+00
PD105	0.000E+00	0.000E+00	0.000E+00	0.000E+00	0.000E+00	0.000E+00	0.000E+00	0.000E+00	0.000E+00	0.000E+00	0.000E+00	0.000E+00
Y106	0.000E+00	0.000E+00	0.000E+00	0.000E+00	0.000E+00	0.000E+00	0.000E+00	0.000E+00	0.000E+00	0.000E+00	0.000E+00	0.000E+00
ZR106	0.000E+00	0.000E+00	0.000E+00	0.000E+00	0.000E+00	0.000E+00	0.000E+00	0.000E+00	0.000E+00	0.000E+00	0.000E+00	0.000E+00
NB106	0.000E+00	0.000E+00	0.000E+00	0.000E+00	0.000E+00	0.000E+00	0.000E+00	0.000E+00	0.000E+00	0.000E+00	0.000E+00	0.000E+00
MO106	0.000E+00	0.000E+00	0.000E+00	0.000E+00	0.000E+00	0.000E+00	0.000E+00	0.000E+00	0.000E+00	0.000E+00	0.000E+00	0.000E+00
TC106	0.000E+00	0.000E+00	0.000E+00	0.000E+00	0.000E+00	0.000E+00	0.000E+00	0.000E+00	0.000E+00	0.000E+00	0.000E+00	0.000E+00
RU106	0.000E+00	0.000E+00	0.000E+00	0.000E+00	0.000E+00	0.000E+00	0.000E+00	0.000E+00	0.000E+00	0.000E+00	0.000E+00	0.000E+00
RH106	0.000E+00	0.000E+00	0.000E+00	0.000E+00	0.000E+00	0.000E+00	0.000E+00	0.000E+00	0.000E+00	0.000E+00	0.000E+00	0.000E+00
RH106M	0.000E+00	0.000E+00	0.000E+00	0.000E+00	0.000E+00	0.000E+00	0.000E+00	0.000E+00	0.000E+00	0.000E+00	0.000E+00	0.000E+00
PD106	0.000E+00	0.000E+00	0.000E+00	0.000E+00	0.000E+00	0.000E+00	0.000E+00	0.000E+00	0.000E+00	0.000E+00	0.000E+00	0.000E+00
AG106	0.000E+00	0.000E+00	0.000E+00	0.000E+00	0.000E+00	0.000E+00	0.000E+00	0.000E+00	0.000E+00	0.000E+00	0.000E+00	0.000E+00

Y107	0.000E+00	0.000E+00	0.000E+00	0.000E+00	0.000E+00	0.000E+00	0.000E+00	0.000E+00	0.000E+00	0.000E+00	0.000E+00	0.000E+00
ZR107	0.000E+00	0.000E+00	0.000E+00	0.000E+00	0.000E+00	0.000E+00	0.000E+00	0.000E+00	0.000E+00	0.000E+00	0.000E+00	0.000E+00
NB107	0.000E+00	0.000E+00	0.000E+00	0.000E+00	0.000E+00	0.000E+00	0.000E+00	0.000E+00	0.000E+00	0.000E+00	0.000E+00	0.000E+00
MO107	0.000E+00	0.000E+00	0.000E+00	0.000E+00	0.000E+00	0.000E+00	0.000E+00	0.000E+00	0.000E+00	0.000E+00	0.000E+00	0.000E+00
TC107	0.000E+00	0.000E+00	0.000E+00	0.000E+00	0.000E+00	0.000E+00	0.000E+00	0.000E+00	0.000E+00	0.000E+00	0.000E+00	0.000E+00
RU107	0.000E+00	0.000E+00	0.000E+00	0.000E+00	0.000E+00	0.000E+00	0.000E+00	0.000E+00	0.000E+00	0.000E+00	0.000E+00	0.000E+00
RH107	0.000E+00	0.000E+00	0.000E+00	0.000E+00	0.000E+00	0.000E+00	0.000E+00	0.000E+00	0.000E+00	0.000E+00	0.000E+00	0.000E+00
PD107	0.000E+00	0.000E+00	0.000E+00	0.000E+00	0.000E+00	0.000E+00	0.000E+00	0.000E+00	0.000E+00	0.000E+00	0.000E+00	0.000E+00
PD107M	0.000E+00	0.000E+00	0.000E+00	0.000E+00	0.000E+00	0.000E+00	0.000E+00	0.000E+00	0.000E+00	0.000E+00	0.000E+00	0.000E+00
AG107	0.000E+00	0.000E+00	0.000E+00	0.000E+00	0.000E+00	0.000E+00	0.000E+00	0.000E+00	0.000E+00	0.000E+00	0.000E+00	0.000E+00
ZR108	0.000E+00	0.000E+00	0.000E+00	0.000E+00	0.000E+00	0.000E+00	0.000E+00	0.000E+00	0.000E+00	0.000E+00	0.000E+00	0.000E+00
NB108	0.000E+00	0.000E+00	0.000E+00	0.000E+00	0.000E+00	0.000E+00	0.000E+00	0.000E+00	0.000E+00	0.000E+00	0.000E+00	0.000E+00
MO108	0.000E+00	0.000E+00	0.000E+00	0.000E+00	0.000E+00	0.000E+00	0.000E+00	0.000E+00	0.000E+00	0.000E+00	0.000E+00	0.000E+00
TC108	0.000E+00	0.000E+00	0.000E+00	0.000E+00	0.000E+00	0.000E+00	0.000E+00	0.000E+00	0.000E+00	0.000E+00	0.000E+00	0.000E+00
RU108	0.000E+00	0.000E+00	0.000E+00	0.000E+00	0.000E+00	0.000E+00	0.000E+00	0.000E+00	0.000E+00	0.000E+00	0.000E+00	0.000E+00
RH108	0.000E+00	0.000E+00	0.000E+00	0.000E+00	0.000E+00	0.000E+00	0.000E+00	0.000E+00	0.000E+00	0.000E+00	0.000E+00	0.000E+00
RH108M	0.000E+00	0.000E+00	0.000E+00	0.000E+00	0.000E+00	0.000E+00	0.000E+00	0.000E+00	0.000E+00	0.000E+00	0.000E+00	0.000E+00
PD108	0.000E+00	0.000E+00	0.000E+00	0.000E+00	0.000E+00	0.000E+00	0.000E+00	0.000E+00	0.000E+00	0.000E+00	0.000E+00	0.000E+00
AG108	0.000E+00	0.000E+00	0.000E+00	0.000E+00	0.000E+00	0.000E+00	0.000E+00	0.000E+00	0.000E+00	0.000E+00	0.000E+00	0.000E+00
AG108M	0.000E+00	0.000E+00	0.000E+00	0.000E+00	0.000E+00	0.000E+00	0.000E+00	0.000E+00	0.000E+00	0.000E+00	0.000E+00	0.000E+00
CD108	0.000E+00	0.000E+00	0.000E+00	0.000E+00	0.000E+00	0.000E+00	0.000E+00	0.000E+00	0.000E+00	0.000E+00	0.000E+00	0.000E+00
ZR109	0.000E+00	0.000E+00	0.000E+00	0.000E+00	0.000E+00	0.000E+00	0.000E+00	0.000E+00	0.000E+00	0.000E+00	0.000E+00	0.000E+00
NB109	0.000E+00	0.000E+00	0.000E+00	0.000E+00	0.000E+00	0.000E+00	0.000E+00	0.000E+00	0.000E+00	0.000E+00	0.000E+00	0.000E+00
MO109	0.000E+00	0.000E+00	0.000E+00	0.000E+00	0.000E+00	0.000E+00	0.000E+00	0.000E+00	0.000E+00	0.000E+00	0.000E+00	0.000E+00
TC109	0.000E+00	0.000E+00	0.000E+00	0.000E+00	0.000E+00	0.000E+00	0.000E+00	0.000E+00	0.000E+00	0.000E+00	0.000E+00	0.000E+00
RU109	0.000E+00	0.000E+00	0.000E+00	0.000E+00	0.000E+00	0.000E+00	0.000E+00	0.000E+00	0.000E+00	0.000E+00	0.000E+00	0.000E+00
RH109	0.000E+00	0.000E+00	0.000E+00	0.000E+00	0.000E+00	0.000E+00	0.000E+00	0.000E+00	0.000E+00	0.000E+00	0.000E+00	0.000E+00
RH109M	0.000E+00	0.000E+00	0.000E+00	0.000E+00	0.000E+00	0.000E+00	0.000E+00	0.000E+00	0.000E+00	0.000E+00	0.000E+00	0.000E+00
PD109	0.000E+00	0.000E+00	0.000E+00	0.000E+00	0.000E+00	0.000E+00	0.000E+00	0.000E+00	0.000E+00	0.000E+00	0.000E+00	0.000E+00
PD109M	0.000E+00	0.000E+00	0.000E+00	0.000E+00	0.000E+00	0.000E+00	0.000E+00	0.000E+00	0.000E+00	0.000E+00	0.000E+00	0.000E+00
AG109	0.000E+00	0.000E+00	0.000E+00	0.000E+00	0.000E+00	0.000E+00	0.000E+00	0.000E+00	0.000E+00	0.000E+00	0.000E+00	0.000E+00
AG109M	0.000E+00	0.000E+00	0.000E+00	0.000E+00	0.000E+00	0.000E+00	0.000E+00	0.000E+00	0.000E+00	0.000E+00	0.000E+00	0.000E+00
CD109	0.000E+00	0.000E+00	0.000E+00	0.000E+00	0.000E+00	0.000E+00	0.000E+00	0.000E+00	0.000E+00	0.000E+00	0.000E+00	0.000E+00
NB110	0.000E+00	0.000E+00	0.000E+00	0.000E+00	0.000E+00	0.000E+00	0.000E+00	0.000E+00	0.000E+00	0.000E+00	0.000E+00	0.000E+00
MO110	0.000E+00	0.000E+00	0.000E+00	0.000E+00	0.000E+00	0.000E+00	0.000E+00	0.000E+00	0.000E+00	0.000E+00	0.000E+00	0.000E+00

1 OUTPUT UNIT = 11 PAGE 9

ORIGEN2 V2.1 (8-1-91), Run on 03/10/04 at 13:15:17

* Decay of containment activity on a per cc basis

\+ FISSION PRODUCTS

POWER= 1.00000E+00 MW, BURNUP= 1.00000E+00 MWD, FLUX= 1.00E+00 N/CM**2-SEC

0 5 NUCLIDE TABLE: CONCENTRATIONS, GRAMS

	0 HR	1 HR	2 HR	4 HR	8 HR	12 HR	24 HR	48 HR	72 HR	96 HR	144 HR	288 HR
TC110	0.000E+00	0.000E+00	0.000E+00	0.000E+00	0.000E+00	0.000E+00	0.000E+00	0.000E+00	0.000E+00	0.000E+00	0.000E+00	0.000E+00
RU110	0.000E+00	0.000E+00	0.000E+00	0.000E+00	0.000E+00	0.000E+00	0.000E+00	0.000E+00	0.000E+00	0.000E+00	0.000E+00	0.000E+00
RH110	0.000E+00	0.000E+00	0.000E+00	0.000E+00	0.000E+00	0.000E+00	0.000E+00	0.000E+00	0.000E+00	0.000E+00	0.000E+00	0.000E+00
RH110M	0.000E+00	0.000E+00	0.000E+00	0.000E+00	0.000E+00	0.000E+00	0.000E+00	0.000E+00	0.000E+00	0.000E+00	0.000E+00	0.000E+00
PD110	0.000E+00	0.000E+00	0.000E+00	0.000E+00	0.000E+00	0.000E+00	0.000E+00	0.000E+00	0.000E+00	0.000E+00	0.000E+00	0.000E+00
AG110	0.000E+00	0.000E+00	0.000E+00	0.000E+00	0.000E+00	0.000E+00	0.000E+00	0.000E+00	0.000E+00	0.000E+00	0.000E+00	0.000E+00
AG110M	0.000E+00	0.000E+00	0.000E+00	0.000E+00	0.000E+00	0.000E+00	0.000E+00	0.000E+00	0.000E+00	0.000E+00	0.000E+00	0.000E+00
CD110	0.000E+00	0.000E+00	0.000E+00	0.000E+00	0.000E+00	0.000E+00	0.000E+00	0.000E+00	0.000E+00	0.000E+00	0.000E+00	0.000E+00
NB111	0.000E+00	0.000E+00	0.000E+00	0.000E+00	0.000E+00	0.000E+00	0.000E+00	0.000E+00	0.000E+00	0.000E+00	0.000E+00	0.000E+00
MO111	0.000E+00	0.000E+00	0.000E+00	0.000E+00	0.000E+00	0.000E+00	0.000E+00	0.000E+00	0.000E+00	0.000E+00	0.000E+00	0.000E+00
TC111	0.000E+00	0.000E+00	0.000E+00	0.000E+00	0.000E+00	0.000E+00	0.000E+00	0.000E+00	0.000E+00	0.000E+00	0.000E+00	0.000E+00
RU111	0.000E+00	0.000E+00	0.000E+00	0.000E+00	0.000E+00	0.000E+00	0.000E+00	0.000E+00	0.000E+00	0.000E+00	0.000E+00	0.000E+00
RH111	0.000E+00	0.000E+00	0.000E+00	0.000E+00	0.000E+00	0.000E+00	0.000E+00	0.000E+00	0.000E+00	0.000E+00	0.000E+00	0.000E+00
PD111	0.000E+00	0.000E+00	0.000E+00	0.000E+00	0.000E+00	0.000E+00	0.000E+00	0.000E+00	0.000E+00	0.000E+00	0.000E+00	0.000E+00

PD111M	0.000E+00	0.000E+00	0.000E+00	0.000E+00	0.000E+00	0.000E+00	0.000E+00	0.000E+00	0.000E+00	0.000E+00	0.000E+00	0.000E+00
AG111	0.000E+00	0.000E+00	0.000E+00	0.000E+00	0.000E+00	0.000E+00	0.000E+00	0.000E+00	0.000E+00	0.000E+00	0.000E+00	0.000E+00
AG111M	0.000E+00	0.000E+00	0.000E+00	0.000E+00	0.000E+00	0.000E+00	0.000E+00	0.000E+00	0.000E+00	0.000E+00	0.000E+00	0.000E+00
CD111	0.000E+00	0.000E+00	0.000E+00	0.000E+00	0.000E+00	0.000E+00	0.000E+00	0.000E+00	0.000E+00	0.000E+00	0.000E+00	0.000E+00
CD111M	0.000E+00	0.000E+00	0.000E+00	0.000E+00	0.000E+00	0.000E+00	0.000E+00	0.000E+00	0.000E+00	0.000E+00	0.000E+00	0.000E+00
NB112	0.000E+00	0.000E+00	0.000E+00	0.000E+00	0.000E+00	0.000E+00	0.000E+00	0.000E+00	0.000E+00	0.000E+00	0.000E+00	0.000E+00
MO112	0.000E+00	0.000E+00	0.000E+00	0.000E+00	0.000E+00	0.000E+00	0.000E+00	0.000E+00	0.000E+00	0.000E+00	0.000E+00	0.000E+00
TC112	0.000E+00	0.000E+00	0.000E+00	0.000E+00	0.000E+00	0.000E+00	0.000E+00	0.000E+00	0.000E+00	0.000E+00	0.000E+00	0.000E+00
RU112	0.000E+00	0.000E+00	0.000E+00	0.000E+00	0.000E+00	0.000E+00	0.000E+00	0.000E+00	0.000E+00	0.000E+00	0.000E+00	0.000E+00
RH112	0.000E+00	0.000E+00	0.000E+00	0.000E+00	0.000E+00	0.000E+00	0.000E+00	0.000E+00	0.000E+00	0.000E+00	0.000E+00	0.000E+00
PD112	0.000E+00	0.000E+00	0.000E+00	0.000E+00	0.000E+00	0.000E+00	0.000E+00	0.000E+00	0.000E+00	0.000E+00	0.000E+00	0.000E+00
AG112	0.000E+00	0.000E+00	0.000E+00	0.000E+00	0.000E+00	0.000E+00	0.000E+00	0.000E+00	0.000E+00	0.000E+00	0.000E+00	0.000E+00
CD112	0.000E+00	0.000E+00	0.000E+00	0.000E+00	0.000E+00	0.000E+00	0.000E+00	0.000E+00	0.000E+00	0.000E+00	0.000E+00	0.000E+00
MO113	0.000E+00	0.000E+00	0.000E+00	0.000E+00	0.000E+00	0.000E+00	0.000E+00	0.000E+00	0.000E+00	0.000E+00	0.000E+00	0.000E+00
TC113	0.000E+00	0.000E+00	0.000E+00	0.000E+00	0.000E+00	0.000E+00	0.000E+00	0.000E+00	0.000E+00	0.000E+00	0.000E+00	0.000E+00
RU113	0.000E+00	0.000E+00	0.000E+00	0.000E+00	0.000E+00	0.000E+00	0.000E+00	0.000E+00	0.000E+00	0.000E+00	0.000E+00	0.000E+00
RH113	0.000E+00	0.000E+00	0.000E+00	0.000E+00	0.000E+00	0.000E+00	0.000E+00	0.000E+00	0.000E+00	0.000E+00	0.000E+00	0.000E+00
PD113	0.000E+00	0.000E+00	0.000E+00	0.000E+00	0.000E+00	0.000E+00	0.000E+00	0.000E+00	0.000E+00	0.000E+00	0.000E+00	0.000E+00
AG113	0.000E+00	0.000E+00	0.000E+00	0.000E+00	0.000E+00	0.000E+00	0.000E+00	0.000E+00	0.000E+00	0.000E+00	0.000E+00	0.000E+00
AG113M	0.000E+00	0.000E+00	0.000E+00	0.000E+00	0.000E+00	0.000E+00	0.000E+00	0.000E+00	0.000E+00	0.000E+00	0.000E+00	0.000E+00
CD113	0.000E+00	0.000E+00	0.000E+00	0.000E+00	0.000E+00	0.000E+00	0.000E+00	0.000E+00	0.000E+00	0.000E+00	0.000E+00	0.000E+00
CD113M	0.000E+00	0.000E+00	0.000E+00	0.000E+00	0.000E+00	0.000E+00	0.000E+00	0.000E+00	0.000E+00	0.000E+00	0.000E+00	0.000E+00
IN113	0.000E+00	0.000E+00	0.000E+00	0.000E+00	0.000E+00	0.000E+00	0.000E+00	0.000E+00	0.000E+00	0.000E+00	0.000E+00	0.000E+00
IN113M	0.000E+00	0.000E+00	0.000E+00	0.000E+00	0.000E+00	0.000E+00	0.000E+00	0.000E+00	0.000E+00	0.000E+00	0.000E+00	0.000E+00
MO114	0.000E+00	0.000E+00	0.000E+00	0.000E+00	0.000E+00	0.000E+00	0.000E+00	0.000E+00	0.000E+00	0.000E+00	0.000E+00	0.000E+00
TC114	0.000E+00	0.000E+00	0.000E+00	0.000E+00	0.000E+00	0.000E+00	0.000E+00	0.000E+00	0.000E+00	0.000E+00	0.000E+00	0.000E+00
RU114	0.000E+00	0.000E+00	0.000E+00	0.000E+00	0.000E+00	0.000E+00	0.000E+00	0.000E+00	0.000E+00	0.000E+00	0.000E+00	0.000E+00
RH114	0.000E+00	0.000E+00	0.000E+00	0.000E+00	0.000E+00	0.000E+00	0.000E+00	0.000E+00	0.000E+00	0.000E+00	0.000E+00	0.000E+00
PD114	0.000E+00	0.000E+00	0.000E+00	0.000E+00	0.000E+00	0.000E+00	0.000E+00	0.000E+00	0.000E+00	0.000E+00	0.000E+00	0.000E+00
AG114	0.000E+00	0.000E+00	0.000E+00	0.000E+00	0.000E+00	0.000E+00	0.000E+00	0.000E+00	0.000E+00	0.000E+00	0.000E+00	0.000E+00
CD114	0.000E+00	0.000E+00	0.000E+00	0.000E+00	0.000E+00	0.000E+00	0.000E+00	0.000E+00	0.000E+00	0.000E+00	0.000E+00	0.000E+00
IN114	0.000E+00	0.000E+00	0.000E+00	0.000E+00	0.000E+00	0.000E+00	0.000E+00	0.000E+00	0.000E+00	0.000E+00	0.000E+00	0.000E+00
IN114M	0.000E+00	0.000E+00	0.000E+00	0.000E+00	0.000E+00	0.000E+00	0.000E+00	0.000E+00	0.000E+00	0.000E+00	0.000E+00	0.000E+00
SN114	0.000E+00	0.000E+00	0.000E+00	0.000E+00	0.000E+00	0.000E+00	0.000E+00	0.000E+00	0.000E+00	0.000E+00	0.000E+00	0.000E+00
MO115	0.000E+00	0.000E+00	0.000E+00	0.000E+00	0.000E+00	0.000E+00	0.000E+00	0.000E+00	0.000E+00	0.000E+00	0.000E+00	0.000E+00
TC115	0.000E+00	0.000E+00	0.000E+00	0.000E+00	0.000E+00	0.000E+00	0.000E+00	0.000E+00	0.000E+00	0.000E+00	0.000E+00	0.000E+00
RU115	0.000E+00	0.000E+00	0.000E+00	0.000E+00	0.000E+00	0.000E+00	0.000E+00	0.000E+00	0.000E+00	0.000E+00	0.000E+00	0.000E+00

1 OUTPUT UNIT = 11 PAGE 10

ORIGEN2 V2.1 (8-1-91), Run on 03/10/04 at 13:15:17

* Decay of containment activity on a per cc basis

\+ FISSION PRODUCTS

POWER= 1.00000E+00 MW, BURNUP= 1.00000E+00 MWD, FLUX= 1.00E+00 N/CM**2-SEC

0 5 NUCLIDE TABLE: CONCENTRATIONS, GRAMS

	0 HR	1 HR	2 HR	4 HR	8 HR	12 HR	24 HR	48 HR	72 HR	96 HR	144 HR	288 HR
RH115	0.000E+00	0.000E+00	0.000E+00	0.000E+00	0.000E+00	0.000E+00	0.000E+00	0.000E+00	0.000E+00	0.000E+00	0.000E+00	0.000E+00
PD115	0.000E+00	0.000E+00	0.000E+00	0.000E+00	0.000E+00	0.000E+00	0.000E+00	0.000E+00	0.000E+00	0.000E+00	0.000E+00	0.000E+00
AG115	0.000E+00	0.000E+00	0.000E+00	0.000E+00	0.000E+00	0.000E+00	0.000E+00	0.000E+00	0.000E+00	0.000E+00	0.000E+00	0.000E+00
AG115M	0.000E+00	0.000E+00	0.000E+00	0.000E+00	0.000E+00	0.000E+00	0.000E+00	0.000E+00	0.000E+00	0.000E+00	0.000E+00	0.000E+00
CD115	0.000E+00	0.000E+00	0.000E+00	0.000E+00	0.000E+00	0.000E+00	0.000E+00	0.000E+00	0.000E+00	0.000E+00	0.000E+00	0.000E+00
CD115M	0.000E+00	0.000E+00	0.000E+00	0.000E+00	0.000E+00	0.000E+00	0.000E+00	0.000E+00	0.000E+00	0.000E+00	0.000E+00	0.000E+00
IN115	0.000E+00	0.000E+00	0.000E+00	0.000E+00	0.000E+00	0.000E+00	0.000E+00	0.000E+00	0.000E+00	0.000E+00	0.000E+00	0.000E+00
IN115M	0.000E+00	0.000E+00	0.000E+00	0.000E+00	0.000E+00	0.000E+00	0.000E+00	0.000E+00	0.000E+00	0.000E+00	0.000E+00	0.000E+00
SN115	0.000E+00	0.000E+00	0.000E+00	0.000E+00	0.000E+00	0.000E+00	0.000E+00	0.000E+00	0.000E+00	0.000E+00	0.000E+00	0.000E+00
TC116	0.000E+00	0.000E+00	0.000E+00	0.000E+00	0.000E+00	0.000E+00	0.000E+00	0.000E+00	0.000E+00	0.000E+00	0.000E+00	0.000E+00
RU116	0.000E+00	0.000E+00	0.000E+00	0.000E+00	0.000E+00	0.000E+00	0.000E+00	0.000E+00	0.000E+00	0.000E+00	0.000E+00	0.000E+00
RH116	0.000E+00	0.000E+00	0.000E+00	0.000E+00	0.000E+00	0.000E+00	0.000E+00	0.000E+00	0.000E+00	0.000E+00	0.000E+00	0.000E+00

PD116	0.000E+00	0.000E+00	0.000E+00	0.000E+00	0.000E+00	0.000E+00	0.000E+00	0.000E+00	0.000E+00	0.000E+00	0.000E+00	0.000E+00
AG116	0.000E+00	0.000E+00	0.000E+00	0.000E+00	0.000E+00	0.000E+00	0.000E+00	0.000E+00	0.000E+00	0.000E+00	0.000E+00	0.000E+00
AG116M	0.000E+00	0.000E+00	0.000E+00	0.000E+00	0.000E+00	0.000E+00	0.000E+00	0.000E+00	0.000E+00	0.000E+00	0.000E+00	0.000E+00
CD116	0.000E+00	0.000E+00	0.000E+00	0.000E+00	0.000E+00	0.000E+00	0.000E+00	0.000E+00	0.000E+00	0.000E+00	0.000E+00	0.000E+00
IN116	0.000E+00	0.000E+00	0.000E+00	0.000E+00	0.000E+00	0.000E+00	0.000E+00	0.000E+00	0.000E+00	0.000E+00	0.000E+00	0.000E+00
IN116M	0.000E+00	0.000E+00	0.000E+00	0.000E+00	0.000E+00	0.000E+00	0.000E+00	0.000E+00	0.000E+00	0.000E+00	0.000E+00	0.000E+00
SN116	0.000E+00	0.000E+00	0.000E+00	0.000E+00	0.000E+00	0.000E+00	0.000E+00	0.000E+00	0.000E+00	0.000E+00	0.000E+00	0.000E+00
TC117	0.000E+00	0.000E+00	0.000E+00	0.000E+00	0.000E+00	0.000E+00	0.000E+00	0.000E+00	0.000E+00	0.000E+00	0.000E+00	0.000E+00
RU117	0.000E+00	0.000E+00	0.000E+00	0.000E+00	0.000E+00	0.000E+00	0.000E+00	0.000E+00	0.000E+00	0.000E+00	0.000E+00	0.000E+00
RH117	0.000E+00	0.000E+00	0.000E+00	0.000E+00	0.000E+00	0.000E+00	0.000E+00	0.000E+00	0.000E+00	0.000E+00	0.000E+00	0.000E+00
PD117	0.000E+00	0.000E+00	0.000E+00	0.000E+00	0.000E+00	0.000E+00	0.000E+00	0.000E+00	0.000E+00	0.000E+00	0.000E+00	0.000E+00
AG117	0.000E+00	0.000E+00	0.000E+00	0.000E+00	0.000E+00	0.000E+00	0.000E+00	0.000E+00	0.000E+00	0.000E+00	0.000E+00	0.000E+00
AG117M	0.000E+00	0.000E+00	0.000E+00	0.000E+00	0.000E+00	0.000E+00	0.000E+00	0.000E+00	0.000E+00	0.000E+00	0.000E+00	0.000E+00
CD117	0.000E+00	0.000E+00	0.000E+00	0.000E+00	0.000E+00	0.000E+00	0.000E+00	0.000E+00	0.000E+00	0.000E+00	0.000E+00	0.000E+00
CD117M	0.000E+00	0.000E+00	0.000E+00	0.000E+00	0.000E+00	0.000E+00	0.000E+00	0.000E+00	0.000E+00	0.000E+00	0.000E+00	0.000E+00
IN117	0.000E+00	0.000E+00	0.000E+00	0.000E+00	0.000E+00	0.000E+00	0.000E+00	0.000E+00	0.000E+00	0.000E+00	0.000E+00	0.000E+00
IN117M	0.000E+00	0.000E+00	0.000E+00	0.000E+00	0.000E+00	0.000E+00	0.000E+00	0.000E+00	0.000E+00	0.000E+00	0.000E+00	0.000E+00
SN117	0.000E+00	0.000E+00	0.000E+00	0.000E+00	0.000E+00	0.000E+00	0.000E+00	0.000E+00	0.000E+00	0.000E+00	0.000E+00	0.000E+00
SN117M	0.000E+00	0.000E+00	0.000E+00	0.000E+00	0.000E+00	0.000E+00	0.000E+00	0.000E+00	0.000E+00	0.000E+00	0.000E+00	0.000E+00
TC118	0.000E+00	0.000E+00	0.000E+00	0.000E+00	0.000E+00	0.000E+00	0.000E+00	0.000E+00	0.000E+00	0.000E+00	0.000E+00	0.000E+00
RU118	0.000E+00	0.000E+00	0.000E+00	0.000E+00	0.000E+00	0.000E+00	0.000E+00	0.000E+00	0.000E+00	0.000E+00	0.000E+00	0.000E+00
RH118	0.000E+00	0.000E+00	0.000E+00	0.000E+00	0.000E+00	0.000E+00	0.000E+00	0.000E+00	0.000E+00	0.000E+00	0.000E+00	0.000E+00
PD118	0.000E+00	0.000E+00	0.000E+00	0.000E+00	0.000E+00	0.000E+00	0.000E+00	0.000E+00	0.000E+00	0.000E+00	0.000E+00	0.000E+00
AG118	0.000E+00	0.000E+00	0.000E+00	0.000E+00	0.000E+00	0.000E+00	0.000E+00	0.000E+00	0.000E+00	0.000E+00	0.000E+00	0.000E+00
AG118M	0.000E+00	0.000E+00	0.000E+00	0.000E+00	0.000E+00	0.000E+00	0.000E+00	0.000E+00	0.000E+00	0.000E+00	0.000E+00	0.000E+00
CD118	0.000E+00	0.000E+00	0.000E+00	0.000E+00	0.000E+00	0.000E+00	0.000E+00	0.000E+00	0.000E+00	0.000E+00	0.000E+00	0.000E+00
IN118	0.000E+00	0.000E+00	0.000E+00	0.000E+00	0.000E+00	0.000E+00	0.000E+00	0.000E+00	0.000E+00	0.000E+00	0.000E+00	0.000E+00
IN118M	0.000E+00	0.000E+00	0.000E+00	0.000E+00	0.000E+00	0.000E+00	0.000E+00	0.000E+00	0.000E+00	0.000E+00	0.000E+00	0.000E+00
SN118	0.000E+00	0.000E+00	0.000E+00	0.000E+00	0.000E+00	0.000E+00	0.000E+00	0.000E+00	0.000E+00	0.000E+00	0.000E+00	0.000E+00
RU119	0.000E+00	0.000E+00	0.000E+00	0.000E+00	0.000E+00	0.000E+00	0.000E+00	0.000E+00	0.000E+00	0.000E+00	0.000E+00	0.000E+00
RH119	0.000E+00	0.000E+00	0.000E+00	0.000E+00	0.000E+00	0.000E+00	0.000E+00	0.000E+00	0.000E+00	0.000E+00	0.000E+00	0.000E+00
PD119	0.000E+00	0.000E+00	0.000E+00	0.000E+00	0.000E+00	0.000E+00	0.000E+00	0.000E+00	0.000E+00	0.000E+00	0.000E+00	0.000E+00
AG119	0.000E+00	0.000E+00	0.000E+00	0.000E+00	0.000E+00	0.000E+00	0.000E+00	0.000E+00	0.000E+00	0.000E+00	0.000E+00	0.000E+00
CD119	0.000E+00	0.000E+00	0.000E+00	0.000E+00	0.000E+00	0.000E+00	0.000E+00	0.000E+00	0.000E+00	0.000E+00	0.000E+00	0.000E+00
CD119M	0.000E+00	0.000E+00	0.000E+00	0.000E+00	0.000E+00	0.000E+00	0.000E+00	0.000E+00	0.000E+00	0.000E+00	0.000E+00	0.000E+00
IN119	0.000E+00	0.000E+00	0.000E+00	0.000E+00	0.000E+00	0.000E+00	0.000E+00	0.000E+00	0.000E+00	0.000E+00	0.000E+00	0.000E+00
IN119M	0.000E+00	0.000E+00	0.000E+00	0.000E+00	0.000E+00	0.000E+00	0.000E+00	0.000E+00	0.000E+00	0.000E+00	0.000E+00	0.000E+00
SN119	0.000E+00	0.000E+00	0.000E+00	0.000E+00	0.000E+00	0.000E+00	0.000E+00	0.000E+00	0.000E+00	0.000E+00	0.000E+00	0.000E+00
SN119M	0.000E+00	0.000E+00	0.000E+00	0.000E+00	0.000E+00	0.000E+00	0.000E+00	0.000E+00	0.000E+00	0.000E+00	0.000E+00	0.000E+00

```
1                                                    OUTPUT UNIT = 11                                    PAGE   11
 ORIGEN2 V2.1 (8-1-91), Run on 03/10/04    at 13:15:17

     *  Decay of containment activity on a per cc basis
+                                                                                   FISSION PRODUCTS
     POWER= 1.00000E+00 MW,  BURNUP= 1.00000E+00 MWD,  FLUX= 1.00E+00 N/CM**2-SEC
0                    5 NUCLIDE TABLE:  CONCENTRATIONS, GRAMS
```

	0 HR	1 HR	2 HR	4 HR	8 HR	12 HR	24 HR	48 HR	72 HR	96 HR	144 HR	288 HR
RU120	0.000E+00	0.000E+00	0.000E+00	0.000E+00	0.000E+00	0.000E+00	0.000E+00	0.000E+00	0.000E+00	0.000E+00	0.000E+00	0.000E+00
RH120	0.000E+00	0.000E+00	0.000E+00	0.000E+00	0.000E+00	0.000E+00	0.000E+00	0.000E+00	0.000E+00	0.000E+00	0.000E+00	0.000E+00
PD120	0.000E+00	0.000E+00	0.000E+00	0.000E+00	0.000E+00	0.000E+00	0.000E+00	0.000E+00	0.000E+00	0.000E+00	0.000E+00	0.000E+00
AG120	0.000E+00	0.000E+00	0.000E+00	0.000E+00	0.000E+00	0.000E+00	0.000E+00	0.000E+00	0.000E+00	0.000E+00	0.000E+00	0.000E+00
CD120	0.000E+00	0.000E+00	0.000E+00	0.000E+00	0.000E+00	0.000E+00	0.000E+00	0.000E+00	0.000E+00	0.000E+00	0.000E+00	0.000E+00
IN120	0.000E+00	0.000E+00	0.000E+00	0.000E+00	0.000E+00	0.000E+00	0.000E+00	0.000E+00	0.000E+00	0.000E+00	0.000E+00	0.000E+00
IN120M	0.000E+00	0.000E+00	0.000E+00	0.000E+00	0.000E+00	0.000E+00	0.000E+00	0.000E+00	0.000E+00	0.000E+00	0.000E+00	0.000E+00
SN120	0.000E+00	0.000E+00	0.000E+00	0.000E+00	0.000E+00	0.000E+00	0.000E+00	0.000E+00	0.000E+00	0.000E+00	0.000E+00	0.000E+00
RH121	0.000E+00	0.000E+00	0.000E+00	0.000E+00	0.000E+00	0.000E+00	0.000E+00	0.000E+00	0.000E+00	0.000E+00	0.000E+00	0.000E+00
PD121	0.000E+00	0.000E+00	0.000E+00	0.000E+00	0.000E+00	0.000E+00	0.000E+00	0.000E+00	0.000E+00	0.000E+00	0.000E+00	0.000E+00

AG121	0.000E+00	0.000E+00	0.000E+00	0.000E+00	0.000E+00	0.000E+00	0.000E+00	0.000E+00	0.000E+00	0.000E+00	0.000E+00	0.000E+00
CD121	0.000E+00	0.000E+00	0.000E+00	0.000E+00	0.000E+00	0.000E+00	0.000E+00	0.000E+00	0.000E+00	0.000E+00	0.000E+00	0.000E+00
IN121	0.000E+00	0.000E+00	0.000E+00	0.000E+00	0.000E+00	0.000E+00	0.000E+00	0.000E+00	0.000E+00	0.000E+00	0.000E+00	0.000E+00
IN121M	0.000E+00	0.000E+00	0.000E+00	0.000E+00	0.000E+00	0.000E+00	0.000E+00	0.000E+00	0.000E+00	0.000E+00	0.000E+00	0.000E+00
SN121	0.000E+00	0.000E+00	0.000E+00	0.000E+00	0.000E+00	0.000E+00	0.000E+00	0.000E+00	0.000E+00	0.000E+00	0.000E+00	0.000E+00
SN121M	0.000E+00	0.000E+00	0.000E+00	0.000E+00	0.000E+00	0.000E+00	0.000E+00	0.000E+00	0.000E+00	0.000E+00	0.000E+00	0.000E+00
SB121	0.000E+00	0.000E+00	0.000E+00	0.000E+00	0.000E+00	0.000E+00	0.000E+00	0.000E+00	0.000E+00	0.000E+00	0.000E+00	0.000E+00
RH122	0.000E+00	0.000E+00	0.000E+00	0.000E+00	0.000E+00	0.000E+00	0.000E+00	0.000E+00	0.000E+00	0.000E+00	0.000E+00	0.000E+00
PD122	0.000E+00	0.000E+00	0.000E+00	0.000E+00	0.000E+00	0.000E+00	0.000E+00	0.000E+00	0.000E+00	0.000E+00	0.000E+00	0.000E+00
AG122	0.000E+00	0.000E+00	0.000E+00	0.000E+00	0.000E+00	0.000E+00	0.000E+00	0.000E+00	0.000E+00	0.000E+00	0.000E+00	0.000E+00
CD122	0.000E+00	0.000E+00	0.000E+00	0.000E+00	0.000E+00	0.000E+00	0.000E+00	0.000E+00	0.000E+00	0.000E+00	0.000E+00	0.000E+00
IN122	0.000E+00	0.000E+00	0.000E+00	0.000E+00	0.000E+00	0.000E+00	0.000E+00	0.000E+00	0.000E+00	0.000E+00	0.000E+00	0.000E+00
IN122M	0.000E+00	0.000E+00	0.000E+00	0.000E+00	0.000E+00	0.000E+00	0.000E+00	0.000E+00	0.000E+00	0.000E+00	0.000E+00	0.000E+00
SN122	0.000E+00	0.000E+00	0.000E+00	0.000E+00	0.000E+00	0.000E+00	0.000E+00	0.000E+00	0.000E+00	0.000E+00	0.000E+00	0.000E+00
SB122	0.000E+00	0.000E+00	0.000E+00	0.000E+00	0.000E+00	0.000E+00	0.000E+00	0.000E+00	0.000E+00	0.000E+00	0.000E+00	0.000E+00
SB122M	0.000E+00	0.000E+00	0.000E+00	0.000E+00	0.000E+00	0.000E+00	0.000E+00	0.000E+00	0.000E+00	0.000E+00	0.000E+00	0.000E+00
TE122	0.000E+00	0.000E+00	0.000E+00	0.000E+00	0.000E+00	0.000E+00	0.000E+00	0.000E+00	0.000E+00	0.000E+00	0.000E+00	0.000E+00
RH123	0.000E+00	0.000E+00	0.000E+00	0.000E+00	0.000E+00	0.000E+00	0.000E+00	0.000E+00	0.000E+00	0.000E+00	0.000E+00	0.000E+00
PD123	0.000E+00	0.000E+00	0.000E+00	0.000E+00	0.000E+00	0.000E+00	0.000E+00	0.000E+00	0.000E+00	0.000E+00	0.000E+00	0.000E+00
AG123	0.000E+00	0.000E+00	0.000E+00	0.000E+00	0.000E+00	0.000E+00	0.000E+00	0.000E+00	0.000E+00	0.000E+00	0.000E+00	0.000E+00
CD123	0.000E+00	0.000E+00	0.000E+00	0.000E+00	0.000E+00	0.000E+00	0.000E+00	0.000E+00	0.000E+00	0.000E+00	0.000E+00	0.000E+00
IN123	0.000E+00	0.000E+00	0.000E+00	0.000E+00	0.000E+00	0.000E+00	0.000E+00	0.000E+00	0.000E+00	0.000E+00	0.000E+00	0.000E+00
IN123M	0.000E+00	0.000E+00	0.000E+00	0.000E+00	0.000E+00	0.000E+00	0.000E+00	0.000E+00	0.000E+00	0.000E+00	0.000E+00	0.000E+00
SN123	0.000E+00	0.000E+00	0.000E+00	0.000E+00	0.000E+00	0.000E+00	0.000E+00	0.000E+00	0.000E+00	0.000E+00	0.000E+00	0.000E+00
SN123M	0.000E+00	0.000E+00	0.000E+00	0.000E+00	0.000E+00	0.000E+00	0.000E+00	0.000E+00	0.000E+00	0.000E+00	0.000E+00	0.000E+00
SB123	0.000E+00	0.000E+00	0.000E+00	0.000E+00	0.000E+00	0.000E+00	0.000E+00	0.000E+00	0.000E+00	0.000E+00	0.000E+00	0.000E+00
TE123	0.000E+00	0.000E+00	0.000E+00	0.000E+00	0.000E+00	0.000E+00	0.000E+00	0.000E+00	0.000E+00	0.000E+00	0.000E+00	0.000E+00
TE123M	0.000E+00	0.000E+00	0.000E+00	0.000E+00	0.000E+00	0.000E+00	0.000E+00	0.000E+00	0.000E+00	0.000E+00	0.000E+00	0.000E+00
PD124	0.000E+00	0.000E+00	0.000E+00	0.000E+00	0.000E+00	0.000E+00	0.000E+00	0.000E+00	0.000E+00	0.000E+00	0.000E+00	0.000E+00
AG124	0.000E+00	0.000E+00	0.000E+00	0.000E+00	0.000E+00	0.000E+00	0.000E+00	0.000E+00	0.000E+00	0.000E+00	0.000E+00	0.000E+00
CD124	0.000E+00	0.000E+00	0.000E+00	0.000E+00	0.000E+00	0.000E+00	0.000E+00	0.000E+00	0.000E+00	0.000E+00	0.000E+00	0.000E+00
IN124	0.000E+00	0.000E+00	0.000E+00	0.000E+00	0.000E+00	0.000E+00	0.000E+00	0.000E+00	0.000E+00	0.000E+00	0.000E+00	0.000E+00
SN124	0.000E+00	0.000E+00	0.000E+00	0.000E+00	0.000E+00	0.000E+00	0.000E+00	0.000E+00	0.000E+00	0.000E+00	0.000E+00	0.000E+00
SB124	0.000E+00	0.000E+00	0.000E+00	0.000E+00	0.000E+00	0.000E+00	0.000E+00	0.000E+00	0.000E+00	0.000E+00	0.000E+00	0.000E+00
SB124M	0.000E+00	0.000E+00	0.000E+00	0.000E+00	0.000E+00	0.000E+00	0.000E+00	0.000E+00	0.000E+00	0.000E+00	0.000E+00	0.000E+00
TE124	0.000E+00	0.000E+00	0.000E+00	0.000E+00	0.000E+00	0.000E+00	0.000E+00	0.000E+00	0.000E+00	0.000E+00	0.000E+00	0.000E+00
PD125	0.000E+00	0.000E+00	0.000E+00	0.000E+00	0.000E+00	0.000E+00	0.000E+00	0.000E+00	0.000E+00	0.000E+00	0.000E+00	0.000E+00
AG125	0.000E+00	0.000E+00	0.000E+00	0.000E+00	0.000E+00	0.000E+00	0.000E+00	0.000E+00	0.000E+00	0.000E+00	0.000E+00	0.000E+00
CD125	0.000E+00	0.000E+00	0.000E+00	0.000E+00	0.000E+00	0.000E+00	0.000E+00	0.000E+00	0.000E+00	0.000E+00	0.000E+00	0.000E+00
IN125	0.000E+00	0.000E+00	0.000E+00	0.000E+00	0.000E+00	0.000E+00	0.000E+00	0.000E+00	0.000E+00	0.000E+00	0.000E+00	0.000E+00
IN125M	0.000E+00	0.000E+00	0.000E+00	0.000E+00	0.000E+00	0.000E+00	0.000E+00	0.000E+00	0.000E+00	0.000E+00	0.000E+00	0.000E+00

1 OUTPUT UNIT = 11 PAGE 12

ORIGEN2 V2.1 (8-1-91), Run on 03/10/04 at 13:15:17

* Decay of containment activity on a per cc basis

\+ FISSION PRODUCTS

POWER= 1.00000E+00 MW, BURNUP= 1.00000E+00 MWD, FLUX= 1.00E+00 N/CM**2-SEC

0 5 NUCLIDE TABLE: CONCENTRATIONS, GRAMS

	0 HR	1 HR	2 HR	4 HR	8 HR	12 HR	24 HR	48 HR	72 HR	96 HR	144 HR	288 HR
SN125	0.000E+00	0.000E+00	0.000E+00	0.000E+00	0.000E+00	0.000E+00	0.000E+00	0.000E+00	0.000E+00	0.000E+00	0.000E+00	0.000E+00
SN125M	0.000E+00	0.000E+00	0.000E+00	0.000E+00	0.000E+00	0.000E+00	0.000E+00	0.000E+00	0.000E+00	0.000E+00	0.000E+00	0.000E+00
SB125	0.000E+00	0.000E+00	0.000E+00	0.000E+00	0.000E+00	0.000E+00	0.000E+00	0.000E+00	0.000E+00	0.000E+00	0.000E+00	0.000E+00
TE125	0.000E+00	0.000E+00	0.000E+00	0.000E+00	0.000E+00	0.000E+00	0.000E+00	0.000E+00	0.000E+00	0.000E+00	0.000E+00	0.000E+00
TE125M	0.000E+00	0.000E+00	0.000E+00	0.000E+00	0.000E+00	0.000E+00	0.000E+00	0.000E+00	0.000E+00	0.000E+00	0.000E+00	0.000E+00
PD126	0.000E+00	0.000E+00	0.000E+00	0.000E+00	0.000E+00	0.000E+00	0.000E+00	0.000E+00	0.000E+00	0.000E+00	0.000E+00	0.000E+00
AG126	0.000E+00	0.000E+00	0.000E+00	0.000E+00	0.000E+00	0.000E+00	0.000E+00	0.000E+00	0.000E+00	0.000E+00	0.000E+00	0.000E+00
CD126	0.000E+00	0.000E+00	0.000E+00	0.000E+00	0.000E+00	0.000E+00	0.000E+00	0.000E+00	0.000E+00	0.000E+00	0.000E+00	0.000E+00

IN126	0.000E+00	0.000E+00	0.000E+00	0.000E+00	0.000E+00	0.000E+00	0.000E+00	0.000E+00	0.000E+00	0.000E+00	0.000E+00	0.000E+00
SN126	0.000E+00	0.000E+00	0.000E+00	0.000E+00	0.000E+00	0.000E+00	0.000E+00	0.000E+00	0.000E+00	0.000E+00	0.000E+00	0.000E+00
SB126	0.000E+00	0.000E+00	0.000E+00	0.000E+00	0.000E+00	0.000E+00	0.000E+00	0.000E+00	0.000E+00	0.000E+00	0.000E+00	0.000E+00
SB126M	0.000E+00	0.000E+00	0.000E+00	0.000E+00	0.000E+00	0.000E+00	0.000E+00	0.000E+00	0.000E+00	0.000E+00	0.000E+00	0.000E+00
TE126	0.000E+00	0.000E+00	0.000E+00	0.000E+00	0.000E+00	0.000E+00	0.000E+00	0.000E+00	0.000E+00	0.000E+00	0.000E+00	0.000E+00
AG127	0.000E+00	0.000E+00	0.000E+00	0.000E+00	0.000E+00	0.000E+00	0.000E+00	0.000E+00	0.000E+00	0.000E+00	0.000E+00	0.000E+00
XE126	0.000E+00	0.000E+00	0.000E+00	0.000E+00	0.000E+00	0.000E+00	0.000E+00	0.000E+00	0.000E+00	0.000E+00	0.000E+00	0.000E+00
CD127	0.000E+00	0.000E+00	0.000E+00	0.000E+00	0.000E+00	0.000E+00	0.000E+00	0.000E+00	0.000E+00	0.000E+00	0.000E+00	0.000E+00
IN127	0.000E+00	0.000E+00	0.000E+00	0.000E+00	0.000E+00	0.000E+00	0.000E+00	0.000E+00	0.000E+00	0.000E+00	0.000E+00	0.000E+00
IN127M	0.000E+00	0.000E+00	0.000E+00	0.000E+00	0.000E+00	0.000E+00	0.000E+00	0.000E+00	0.000E+00	0.000E+00	0.000E+00	0.000E+00
SN127	0.000E+00	0.000E+00	0.000E+00	0.000E+00	0.000E+00	0.000E+00	0.000E+00	0.000E+00	0.000E+00	0.000E+00	0.000E+00	0.000E+00
SN127M	0.000E+00	0.000E+00	0.000E+00	0.000E+00	0.000E+00	0.000E+00	0.000E+00	0.000E+00	0.000E+00	0.000E+00	0.000E+00	0.000E+00
SB127	0.000E+00	0.000E+00	0.000E+00	0.000E+00	0.000E+00	0.000E+00	0.000E+00	0.000E+00	0.000E+00	0.000E+00	0.000E+00	0.000E+00
TE127	0.000E+00	0.000E+00	0.000E+00	0.000E+00	0.000E+00	0.000E+00	0.000E+00	0.000E+00	0.000E+00	0.000E+00	0.000E+00	0.000E+00
TE127M	0.000E+00	0.000E+00	0.000E+00	0.000E+00	0.000E+00	0.000E+00	0.000E+00	0.000E+00	0.000E+00	0.000E+00	0.000E+00	0.000E+00
I127	0.000E+00	0.000E+00	0.000E+00	0.000E+00	0.000E+00	0.000E+00	0.000E+00	0.000E+00	0.000E+00	0.000E+00	0.000E+00	0.000E+00
XE127	0.000E+00	0.000E+00	0.000E+00	0.000E+00	0.000E+00	0.000E+00	0.000E+00	0.000E+00	0.000E+00	0.000E+00	0.000E+00	0.000E+00
AG128	0.000E+00	0.000E+00	0.000E+00	0.000E+00	0.000E+00	0.000E+00	0.000E+00	0.000E+00	0.000E+00	0.000E+00	0.000E+00	0.000E+00
CD128	0.000E+00	0.000E+00	0.000E+00	0.000E+00	0.000E+00	0.000E+00	0.000E+00	0.000E+00	0.000E+00	0.000E+00	0.000E+00	0.000E+00
IN128	0.000E+00	0.000E+00	0.000E+00	0.000E+00	0.000E+00	0.000E+00	0.000E+00	0.000E+00	0.000E+00	0.000E+00	0.000E+00	0.000E+00
SN128	0.000E+00	0.000E+00	0.000E+00	0.000E+00	0.000E+00	0.000E+00	0.000E+00	0.000E+00	0.000E+00	0.000E+00	0.000E+00	0.000E+00
SB128	0.000E+00	0.000E+00	0.000E+00	0.000E+00	0.000E+00	0.000E+00	0.000E+00	0.000E+00	0.000E+00	0.000E+00	0.000E+00	0.000E+00
SB128M	0.000E+00	0.000E+00	0.000E+00	0.000E+00	0.000E+00	0.000E+00	0.000E+00	0.000E+00	0.000E+00	0.000E+00	0.000E+00	0.000E+00
TE128	0.000E+00	0.000E+00	0.000E+00	0.000E+00	0.000E+00	0.000E+00	0.000E+00	0.000E+00	0.000E+00	0.000E+00	0.000E+00	0.000E+00
I128	0.000E+00	0.000E+00	0.000E+00	0.000E+00	0.000E+00	0.000E+00	0.000E+00	0.000E+00	0.000E+00	0.000E+00	0.000E+00	0.000E+00
XE128	0.000E+00	0.000E+00	0.000E+00	0.000E+00	0.000E+00	0.000E+00	0.000E+00	0.000E+00	0.000E+00	0.000E+00	0.000E+00	0.000E+00
CD129	0.000E+00	0.000E+00	0.000E+00	0.000E+00	0.000E+00	0.000E+00	0.000E+00	0.000E+00	0.000E+00	0.000E+00	0.000E+00	0.000E+00
IN129	0.000E+00	0.000E+00	0.000E+00	0.000E+00	0.000E+00	0.000E+00	0.000E+00	0.000E+00	0.000E+00	0.000E+00	0.000E+00	0.000E+00
SN129	0.000E+00	0.000E+00	0.000E+00	0.000E+00	0.000E+00	0.000E+00	0.000E+00	0.000E+00	0.000E+00	0.000E+00	0.000E+00	0.000E+00
SN129M	0.000E+00	0.000E+00	0.000E+00	0.000E+00	0.000E+00	0.000E+00	0.000E+00	0.000E+00	0.000E+00	0.000E+00	0.000E+00	0.000E+00
SB129	0.000E+00	0.000E+00	0.000E+00	0.000E+00	0.000E+00	0.000E+00	0.000E+00	0.000E+00	0.000E+00	0.000E+00	0.000E+00	0.000E+00
TE129	0.000E+00	0.000E+00	0.000E+00	0.000E+00	0.000E+00	0.000E+00	0.000E+00	0.000E+00	0.000E+00	0.000E+00	0.000E+00	0.000E+00
TE129M	0.000E+00	0.000E+00	0.000E+00	0.000E+00	0.000E+00	0.000E+00	0.000E+00	0.000E+00	0.000E+00	0.000E+00	0.000E+00	0.000E+00
I129	0.000E+00	0.000E+00	0.000E+00	0.000E+00	0.000E+00	0.000E+00	0.000E+00	0.000E+00	0.000E+00	0.000E+00	0.000E+00	0.000E+00
XE129	0.000E+00	0.000E+00	0.000E+00	0.000E+00	0.000E+00	0.000E+00	0.000E+00	0.000E+00	0.000E+00	0.000E+00	0.000E+00	0.000E+00
XE129M	0.000E+00	0.000E+00	0.000E+00	0.000E+00	0.000E+00	0.000E+00	0.000E+00	0.000E+00	0.000E+00	0.000E+00	0.000E+00	0.000E+00
CD130	0.000E+00	0.000E+00	0.000E+00	0.000E+00	0.000E+00	0.000E+00	0.000E+00	0.000E+00	0.000E+00	0.000E+00	0.000E+00	0.000E+00
IN130	0.000E+00	0.000E+00	0.000E+00	0.000E+00	0.000E+00	0.000E+00	0.000E+00	0.000E+00	0.000E+00	0.000E+00	0.000E+00	0.000E+00
SN130	0.000E+00	0.000E+00	0.000E+00	0.000E+00	0.000E+00	0.000E+00	0.000E+00	0.000E+00	0.000E+00	0.000E+00	0.000E+00	0.000E+00
SB130	0.000E+00	0.000E+00	0.000E+00	0.000E+00	0.000E+00	0.000E+00	0.000E+00	0.000E+00	0.000E+00	0.000E+00	0.000E+00	0.000E+00
SB130M	0.000E+00	0.000E+00	0.000E+00	0.000E+00	0.000E+00	0.000E+00	0.000E+00	0.000E+00	0.000E+00	0.000E+00	0.000E+00	0.000E+00
TE130	0.000E+00	0.000E+00	0.000E+00	0.000E+00	0.000E+00	0.000E+00	0.000E+00	0.000E+00	0.000E+00	0.000E+00	0.000E+00	0.000E+00
I130	0.000E+00	0.000E+00	0.000E+00	0.000E+00	0.000E+00	0.000E+00	0.000E+00	0.000E+00	0.000E+00	0.000E+00	0.000E+00	0.000E+00

```
1                                                                    OUTPUT UNIT = 11                                    PAGE   13
 ORIGEN2 V2.1 (8-1-91), Run on 03/10/04    at 13:15:17

     *  Decay of containment activity on a per cc basis
+                                                                                                   FISSION PRODUCTS
     POWER= 1.00000E+00 MW,  BURNUP= 1.00000E+00 MWD,  FLUX= 1.00E+00 N/CM**2-SEC
0                    5 NUCLIDE TABLE:  CONCENTRATIONS, GRAMS
```

	0 HR	1 HR	2 HR	4 HR	8 HR	12 HR	24 HR	48 HR	72 HR	96 HR	144 HR	288 HR
I130M	0.000E+00	0.000E+00	0.000E+00	0.000E+00	0.000E+00	0.000E+00	0.000E+00	0.000E+00	0.000E+00	0.000E+00	0.000E+00	0.000E+00
XE130	0.000E+00	0.000E+00	0.000E+00	0.000E+00	0.000E+00	0.000E+00	0.000E+00	0.000E+00	0.000E+00	0.000E+00	0.000E+00	0.000E+00
CD131	0.000E+00	0.000E+00	0.000E+00	0.000E+00	0.000E+00	0.000E+00	0.000E+00	0.000E+00	0.000E+00	0.000E+00	0.000E+00	0.000E+00
IN131	0.000E+00	0.000E+00	0.000E+00	0.000E+00	0.000E+00	0.000E+00	0.000E+00	0.000E+00	0.000E+00	0.000E+00	0.000E+00	0.000E+00
SN131	0.000E+00	0.000E+00	0.000E+00	0.000E+00	0.000E+00	0.000E+00	0.000E+00	0.000E+00	0.000E+00	0.000E+00	0.000E+00	0.000E+00
SB131	0.000E+00	0.000E+00	0.000E+00	0.000E+00	0.000E+00	0.000E+00	0.000E+00	0.000E+00	0.000E+00	0.000E+00	0.000E+00	0.000E+00

TE131	0.000E+00	0.000E+00	0.000E+00	0.000E+00	0.000E+00	0.000E+00	0.000E+00	0.000E+00	0.000E+00	0.000E+00	0.000E+00	0.000E+00
TE131M	0.000E+00	0.000E+00	0.000E+00	0.000E+00	0.000E+00	0.000E+00	0.000E+00	0.000E+00	0.000E+00	0.000E+00	0.000E+00	0.000E+00
I131	2.700E-09	2.690E-09	2.681E-09	2.661E-09	2.624E-09	2.586E-09	2.477E-09	2.272E-09	2.085E-09	1.913E-09	1.610E-09	9.596E-10
XE131	0.000E+00	9.638E-12	1.924E-11	3.835E-11	7.615E-11	1.134E-10	2.221E-10	4.261E-10	6.133E-10	7.853E-10	1.088E-09	1.741E-09
XE131M	2.670E-11	2.674E-11	2.678E-11	2.687E-11	2.703E-11	2.718E-11	2.759E-11	2.824E-11	2.866E-11	2.890E-11	2.889E-11	2.636E-11
CD132	0.000E+00	0.000E+00	0.000E+00	0.000E+00	0.000E+00	0.000E+00	0.000E+00	0.000E+00	0.000E+00	0.000E+00	0.000E+00	0.000E+00
IN132	0.000E+00	0.000E+00	0.000E+00	0.000E+00	0.000E+00	0.000E+00	0.000E+00	0.000E+00	0.000E+00	0.000E+00	0.000E+00	0.000E+00
SN132	0.000E+00	0.000E+00	0.000E+00	0.000E+00	0.000E+00	0.000E+00	0.000E+00	0.000E+00	0.000E+00	0.000E+00	0.000E+00	0.000E+00
SB132	0.000E+00	0.000E+00	0.000E+00	0.000E+00	0.000E+00	0.000E+00	0.000E+00	0.000E+00	0.000E+00	0.000E+00	0.000E+00	0.000E+00
SB132M	0.000E+00	0.000E+00	0.000E+00	0.000E+00	0.000E+00	0.000E+00	0.000E+00	0.000E+00	0.000E+00	0.000E+00	0.000E+00	0.000E+00
TE132	0.000E+00	0.000E+00	0.000E+00	0.000E+00	0.000E+00	0.000E+00	0.000E+00	0.000E+00	0.000E+00	0.000E+00	0.000E+00	0.000E+00
I132	2.920E-11	2.160E-11	1.598E-11	8.747E-12	2.620E-12	7.849E-13	2.110E-14	1.524E-17	1.101E-20	7.955E-24	4.152E-30	0.000E+00
XE132	0.000E+00	7.598E-12	1.322E-11	2.045E-11	2.658E-11	2.842E-11	2.918E-11	2.920E-11	2.920E-11	2.920E-11	2.920E-11	2.920E-11
CS132	0.000E+00	0.000E+00	0.000E+00	0.000E+00	0.000E+00	0.000E+00	0.000E+00	0.000E+00	0.000E+00	0.000E+00	0.000E+00	0.000E+00
BA132	0.000E+00	0.000E+00	0.000E+00	0.000E+00	0.000E+00	0.000E+00	0.000E+00	0.000E+00	0.000E+00	0.000E+00	0.000E+00	0.000E+00
IN133	0.000E+00	0.000E+00	0.000E+00	0.000E+00	0.000E+00	0.000E+00	0.000E+00	0.000E+00	0.000E+00	0.000E+00	0.000E+00	0.000E+00
SN133	0.000E+00	0.000E+00	0.000E+00	0.000E+00	0.000E+00	0.000E+00	0.000E+00	0.000E+00	0.000E+00	0.000E+00	0.000E+00	0.000E+00
SB133	0.000E+00	0.000E+00	0.000E+00	0.000E+00	0.000E+00	0.000E+00	0.000E+00	0.000E+00	0.000E+00	0.000E+00	0.000E+00	0.000E+00
TE133	0.000E+00	0.000E+00	0.000E+00	0.000E+00	0.000E+00	0.000E+00	0.000E+00	0.000E+00	0.000E+00	0.000E+00	0.000E+00	0.000E+00
TE133M	0.000E+00	0.000E+00	0.000E+00	0.000E+00	0.000E+00	0.000E+00	0.000E+00	0.000E+00	0.000E+00	0.000E+00	0.000E+00	0.000E+00
I133	3.770E-10	3.646E-10	3.527E-10	3.300E-10	2.888E-10	2.527E-10	1.694E-10	7.615E-11	3.422E-11	1.538E-11	3.107E-12	2.560E-14
I133M	0.000E+00	0.000E+00	0.000E+00	0.000E+00	0.000E+00	0.000E+00	0.000E+00	0.000E+00	0.000E+00	0.000E+00	0.000E+00	0.000E+00
XE133	2.260E-09	2.260E-09	2.260E-09	2.257E-09	2.249E-09	2.236E-09	2.176E-09	1.998E-09	1.794E-09	1.593E-09	1.239E-09	5.658E-10
XE133M	2.960E-11	2.957E-11	2.952E-11	2.940E-11	2.904E-11	2.856E-11	2.659E-11	2.163E-11	1.678E-11	1.268E-11	6.974E-12	1.065E-12
CS133	0.000E+00	1.244E-11	2.489E-11	4.976E-11	9.940E-11	1.488E-10	2.947E-10	5.710E-10	8.216E-10	1.045E-09	1.418E-09	2.100E-09
BA133	0.000E+00	0.000E+00	0.000E+00	0.000E+00	0.000E+00	0.000E+00	0.000E+00	0.000E+00	0.000E+00	0.000E+00	0.000E+00	0.000E+00
IN134	0.000E+00	0.000E+00	0.000E+00	0.000E+00	0.000E+00	0.000E+00	0.000E+00	0.000E+00	0.000E+00	0.000E+00	0.000E+00	0.000E+00
SN134	0.000E+00	0.000E+00	0.000E+00	0.000E+00	0.000E+00	0.000E+00	0.000E+00	0.000E+00	0.000E+00	0.000E+00	0.000E+00	0.000E+00
SB134	0.000E+00	0.000E+00	0.000E+00	0.000E+00	0.000E+00	0.000E+00	0.000E+00	0.000E+00	0.000E+00	0.000E+00	0.000E+00	0.000E+00
SB134M	0.000E+00	0.000E+00	0.000E+00	0.000E+00	0.000E+00	0.000E+00	0.000E+00	0.000E+00	0.000E+00	0.000E+00	0.000E+00	0.000E+00
TE134	0.000E+00	0.000E+00	0.000E+00	0.000E+00	0.000E+00	0.000E+00	0.000E+00	0.000E+00	0.000E+00	0.000E+00	0.000E+00	0.000E+00
I134	1.770E-11	8.028E-12	3.641E-12	7.489E-13	3.169E-14	1.341E-15	1.016E-19	5.831E-28	3.347E-36	0.000E+00	0.000E+00	0.000E+00
I134M	0.000E+00	0.000E+00	0.000E+00	0.000E+00	0.000E+00	0.000E+00	0.000E+00	0.000E+00	0.000E+00	0.000E+00	0.000E+00	0.000E+00
XE134	0.000E+00	9.672E-12	1.406E-11	1.695E-11	1.767E-11	1.770E-11	1.770E-11	1.770E-11	1.770E-11	1.770E-11	1.770E-11	1.770E-11
XE134M	0.000E+00	0.000E+00	0.000E+00	0.000E+00	0.000E+00	0.000E+00	0.000E+00	0.000E+00	0.000E+00	0.000E+00	0.000E+00	0.000E+00
CS134	7.980E-08	7.980E-08	7.979E-08	7.979E-08	7.978E-08	7.976E-08	7.973E-08	7.965E-08	7.958E-08	7.951E-08	7.936E-08	7.892E-08
CS134M	0.000E+00	0.000E+00	0.000E+00	0.000E+00	0.000E+00	0.000E+00	0.000E+00	0.000E+00	0.000E+00	0.000E+00	0.000E+00	0.000E+00
BA134	0.000E+00	3.060E-12	6.120E-12	1.224E-11	2.448E-11	3.671E-11	7.341E-11	1.468E-10	2.200E-10	2.932E-10	4.395E-10	8.765E-10
SN135	0.000E+00	0.000E+00	0.000E+00	0.000E+00	0.000E+00	0.000E+00	0.000E+00	0.000E+00	0.000E+00	0.000E+00	0.000E+00	0.000E+00
SB135	0.000E+00	0.000E+00	0.000E+00	0.000E+00	0.000E+00	0.000E+00	0.000E+00	0.000E+00	0.000E+00	0.000E+00	0.000E+00	0.000E+00
TE135	0.000E+00	0.000E+00	0.000E+00	0.000E+00	0.000E+00	0.000E+00	0.000E+00	0.000E+00	0.000E+00	0.000E+00	0.000E+00	0.000E+00
I135	1.140E-10	1.027E-10	9.244E-11	7.495E-11	4.928E-11	3.240E-11	9.206E-12	7.435E-13	6.004E-14	4.849E-15	3.163E-17	8.773E-24
XE135	4.270E-11	5.074E-11	5.692E-11	6.514E-11	7.000E-11	6.605E-11	4.032E-11	9.161E-12	1.687E-12	2.881E-13	7.751E-15	1.338E-19
XE135M	9.210E-13	6.481E-13	5.716E-13	4.628E-13	3.042E-13	2.000E-13	5.684E-14	4.590E-15	3.707E-16	2.994E-17	1.953E-19	5.417E-26
CS135	0.000E+00	3.578E-12	7.693E-12	1.706E-11	3.805E-11	5.900E-11	1.081E-10	1.477E-10	1.559E-10	1.574E-10	1.576E-10	1.577E-10

```
1                                                    OUTPUT UNIT = 11                                  PAGE   14
 ORIGEN2 V2.1 (8-1-91), Run on 03/10/04    at 13:15:17

     * Decay of containment activity on a per cc basis
+                                                                                  FISSION PRODUCTS
     POWER= 1.00000E+00 MW,  BURNUP= 1.00000E+00 MWD,  FLUX= 1.00E+00 N/CM**2-SEC
o                    5 NUCLIDE TABLE:  CONCENTRATIONS, GRAMS
```

	0 HR	1 HR	2 HR	4 HR	8 HR	12 HR	24 HR	48 HR	72 HR	96 HR	144 HR	288 HR
CS135M	0.000E+00	0.000E+00	0.000E+00	0.000E+00	0.000E+00	0.000E+00	0.000E+00	0.000E+00	0.000E+00	0.000E+00	0.000E+00	0.000E+00
BA135	0.000E+00	5.598E-23	2.455E-22	1.092E-21	4.864E-21	1.156E-20	4.686E-20	1.563E-19	2.825E-19	4.119E-19	6.719E-19	1.452E-18
BA135M	0.000E+00	0.000E+00	0.000E+00	0.000E+00	0.000E+00	0.000E+00	0.000E+00	0.000E+00	0.000E+00	0.000E+00	0.000E+00	0.000E+00
SN136	0.000E+00	0.000E+00	0.000E+00	0.000E+00	0.000E+00	0.000E+00	0.000E+00	0.000E+00	0.000E+00	0.000E+00	0.000E+00	0.000E+00

SB136	0.000E+00	0.000E+00	0.000E+00	0.000E+00	0.000E+00	0.000E+00	0.000E+00	0.000E+00	0.000E+00	0.000E+00	0.000E+00	0.000E+00
TE136	0.000E+00	0.000E+00	0.000E+00	0.000E+00	0.000E+00	0.000E+00	0.000E+00	0.000E+00	0.000E+00	0.000E+00	0.000E+00	0.000E+00
I136	0.000E+00	0.000E+00	0.000E+00	0.000E+00	0.000E+00	0.000E+00	0.000E+00	0.000E+00	0.000E+00	0.000E+00	0.000E+00	0.000E+00
I136M	0.000E+00	0.000E+00	0.000E+00	0.000E+00	0.000E+00	0.000E+00	0.000E+00	0.000E+00	0.000E+00	0.000E+00	0.000E+00	0.000E+00
XE136	0.000E+00	0.000E+00	0.000E+00	0.000E+00	0.000E+00	0.000E+00	0.000E+00	0.000E+00	0.000E+00	0.000E+00	0.000E+00	0.000E+00
CS136	3.520E-10	3.512E-10	3.505E-10	3.489E-10	3.458E-10	3.428E-10	3.339E-10	3.167E-10	3.003E-10	2.849E-10	2.563E-10	1.866E-10
BA136	0.000E+00	7.751E-13	1.548E-12	3.090E-12	6.153E-12	9.189E-12	1.814E-11	3.534E-11	5.166E-11	6.714E-11	9.574E-11	1.654E-10
BA136M	0.000E+00	1.575E-17	1.571E-17	1.564E-17	1.551E-17	1.537E-17	1.497E-17	1.420E-17	1.347E-17	1.277E-17	1.149E-17	8.365E-18
SB137	0.000E+00	0.000E+00	0.000E+00	0.000E+00	0.000E+00	0.000E+00	0.000E+00	0.000E+00	0.000E+00	0.000E+00	0.000E+00	0.000E+00
TE137	0.000E+00	0.000E+00	0.000E+00	0.000E+00	0.000E+00	0.000E+00	0.000E+00	0.000E+00	0.000E+00	0.000E+00	0.000E+00	0.000E+00
I137	0.000E+00	0.000E+00	0.000E+00	0.000E+00	0.000E+00	0.000E+00	0.000E+00	0.000E+00	0.000E+00	0.000E+00	0.000E+00	0.000E+00
XE137	0.000E+00	0.000E+00	0.000E+00	0.000E+00	0.000E+00	0.000E+00	0.000E+00	0.000E+00	0.000E+00	0.000E+00	0.000E+00	0.000E+00
CS137	7.610E-07	7.610E-07	7.610E-07	7.610E-07	7.610E-07	7.610E-07	7.610E-07	7.609E-07	7.609E-07	7.608E-07	7.607E-07	7.604E-07
BA137	0.000E+00	1.889E-12	3.894E-12	7.905E-12	1.593E-11	2.395E-11	4.802E-11	9.616E-11	1.443E-10	1.924E-10	2.887E-10	5.774E-10
BA137M	0.000E+00	1.164E-13	1.164E-13	1.164E-13	1.164E-13	1.164E-13	1.164E-13	1.164E-13	1.164E-13	1.164E-13	1.164E-13	1.163E-13
SB138	0.000E+00	0.000E+00	0.000E+00	0.000E+00	0.000E+00	0.000E+00	0.000E+00	0.000E+00	0.000E+00	0.000E+00	0.000E+00	0.000E+00
TE138	0.000E+00	0.000E+00	0.000E+00	0.000E+00	0.000E+00	0.000E+00	0.000E+00	0.000E+00	0.000E+00	0.000E+00	0.000E+00	0.000E+00
I138	0.000E+00	0.000E+00	0.000E+00	0.000E+00	0.000E+00	0.000E+00	0.000E+00	0.000E+00	0.000E+00	0.000E+00	0.000E+00	0.000E+00
XE138	3.670E-12	1.950E-13	1.036E-14	2.926E-17	2.332E-22	1.858E-27	9.669E-43	0.000E+00	0.000E+00	0.000E+00	0.000E+00	0.000E+00
CS138	0.000E+00	1.453E-12	4.766E-13	3.734E-14	2.134E-16	1.218E-18	2.262E-25	7.803E-39	0.000E+00	0.000E+00	0.000E+00	0.000E+00
CS138M	0.000E+00	0.000E+00	0.000E+00	0.000E+00	0.000E+00	0.000E+00	0.000E+00	0.000E+00	0.000E+00	0.000E+00	0.000E+00	0.000E+00
BA138	0.000E+00	2.022E-12	3.183E-12	3.633E-12	3.670E-12	3.670E-12	3.670E-12	3.670E-12	3.670E-12	3.670E-12	3.670E-12	3.670E-12
LA138	0.000E+00	0.000E+00	0.000E+00	0.000E+00	0.000E+00	0.000E+00	0.000E+00	0.000E+00	0.000E+00	0.000E+00	0.000E+00	0.000E+00
SB139	0.000E+00	0.000E+00	0.000E+00	0.000E+00	0.000E+00	0.000E+00	0.000E+00	0.000E+00	0.000E+00	0.000E+00	0.000E+00	0.000E+00
TE139	0.000E+00	0.000E+00	0.000E+00	0.000E+00	0.000E+00	0.000E+00	0.000E+00	0.000E+00	0.000E+00	0.000E+00	0.000E+00	0.000E+00
I139	0.000E+00	0.000E+00	0.000E+00	0.000E+00	0.000E+00	0.000E+00	0.000E+00	0.000E+00	0.000E+00	0.000E+00	0.000E+00	0.000E+00
XE139	0.000E+00	0.000E+00	0.000E+00	0.000E+00	0.000E+00	0.000E+00	0.000E+00	0.000E+00	0.000E+00	0.000E+00	0.000E+00	0.000E+00
CS139	0.000E+00	0.000E+00	0.000E+00	0.000E+00	0.000E+00	0.000E+00	0.000E+00	0.000E+00	0.000E+00	0.000E+00	0.000E+00	0.000E+00
BA139	0.000E+00	0.000E+00	0.000E+00	0.000E+00	0.000E+00	0.000E+00	0.000E+00	0.000E+00	0.000E+00	0.000E+00	0.000E+00	0.000E+00
LA139	0.000E+00	0.000E+00	0.000E+00	0.000E+00	0.000E+00	0.000E+00	0.000E+00	0.000E+00	0.000E+00	0.000E+00	0.000E+00	0.000E+00
CE139	0.000E+00	0.000E+00	0.000E+00	0.000E+00	0.000E+00	0.000E+00	0.000E+00	0.000E+00	0.000E+00	0.000E+00	0.000E+00	0.000E+00
PR139	0.000E+00	0.000E+00	0.000E+00	0.000E+00	0.000E+00	0.000E+00	0.000E+00	0.000E+00	0.000E+00	0.000E+00	0.000E+00	0.000E+00
TE140	0.000E+00	0.000E+00	0.000E+00	0.000E+00	0.000E+00	0.000E+00	0.000E+00	0.000E+00	0.000E+00	0.000E+00	0.000E+00	0.000E+00
I140	0.000E+00	0.000E+00	0.000E+00	0.000E+00	0.000E+00	0.000E+00	0.000E+00	0.000E+00	0.000E+00	0.000E+00	0.000E+00	0.000E+00
XE140	0.000E+00	0.000E+00	0.000E+00	0.000E+00	0.000E+00	0.000E+00	0.000E+00	0.000E+00	0.000E+00	0.000E+00	0.000E+00	0.000E+00
CS140	0.000E+00	0.000E+00	0.000E+00	0.000E+00	0.000E+00	0.000E+00	0.000E+00	0.000E+00	0.000E+00	0.000E+00	0.000E+00	0.000E+00
BA140	0.000E+00	0.000E+00	0.000E+00	0.000E+00	0.000E+00	0.000E+00	0.000E+00	0.000E+00	0.000E+00	0.000E+00	0.000E+00	0.000E+00
LA140	0.000E+00	0.000E+00	0.000E+00	0.000E+00	0.000E+00	0.000E+00	0.000E+00	0.000E+00	0.000E+00	0.000E+00	0.000E+00	0.000E+00
CE140	0.000E+00	0.000E+00	0.000E+00	0.000E+00	0.000E+00	0.000E+00	0.000E+00	0.000E+00	0.000E+00	0.000E+00	0.000E+00	0.000E+00
PR140	0.000E+00	0.000E+00	0.000E+00	0.000E+00	0.000E+00	0.000E+00	0.000E+00	0.000E+00	0.000E+00	0.000E+00	0.000E+00	0.000E+00
TE141	0.000E+00	0.000E+00	0.000E+00	0.000E+00	0.000E+00	0.000E+00	0.000E+00	0.000E+00	0.000E+00	0.000E+00	0.000E+00	0.000E+00
I141	0.000E+00	0.000E+00	0.000E+00	0.000E+00	0.000E+00	0.000E+00	0.000E+00	0.000E+00	0.000E+00	0.000E+00	0.000E+00	0.000E+00
XE141	0.000E+00	0.000E+00	0.000E+00	0.000E+00	0.000E+00	0.000E+00	0.000E+00	0.000E+00	0.000E+00	0.000E+00	0.000E+00	0.000E+00
CS141	0.000E+00	0.000E+00	0.000E+00	0.000E+00	0.000E+00	0.000E+00	0.000E+00	0.000E+00	0.000E+00	0.000E+00	0.000E+00	0.000E+00
BA141	0.000E+00	0.000E+00	0.000E+00	0.000E+00	0.000E+00	0.000E+00	0.000E+00	0.000E+00	0.000E+00	0.000E+00	0.000E+00	0.000E+00
LA141	0.000E+00	0.000E+00	0.000E+00	0.000E+00	0.000E+00	0.000E+00	0.000E+00	0.000E+00	0.000E+00	0.000E+00	0.000E+00	0.000E+00
CE141	0.000E+00	0.000E+00	0.000E+00	0.000E+00	0.000E+00	0.000E+00	0.000E+00	0.000E+00	0.000E+00	0.000E+00	0.000E+00	0.000E+00

```
1                                                                    OUTPUT UNIT = 11                                    PAGE   15
 ORIGEN2 V2.1 (8-1-91), Run on 03/10/04    at 13:15:17

     *  Decay of containment activity on a per cc basis
+                                                                                                   FISSION PRODUCTS
     POWER= 1.00000E+00 MW,  BURNUP= 1.00000E+00 MWD,  FLUX= 1.00E+00 N/CM**2-SEC
0                    5 NUCLIDE TABLE:  CONCENTRATIONS, GRAMS
```

	0 HR	1 HR	2 HR	4 HR	8 HR	12 HR	24 HR	48 HR	72 HR	96 HR	144 HR	288 HR
PR141	0.000E+00	0.000E+00	0.000E+00	0.000E+00	0.000E+00	0.000E+00	0.000E+00	0.000E+00	0.000E+00	0.000E+00	0.000E+00	0.000E+00
ND141	0.000E+00	0.000E+00	0.000E+00	0.000E+00	0.000E+00	0.000E+00	0.000E+00	0.000E+00	0.000E+00	0.000E+00	0.000E+00	0.000E+00

TE142	0.000E+00	0.000E+00	0.000E+00	0.000E+00	0.000E+00	0.000E+00	0.000E+00	0.000E+00	0.000E+00	0.000E+00	0.000E+00	0.000E+00
I142	0.000E+00	0.000E+00	0.000E+00	0.000E+00	0.000E+00	0.000E+00	0.000E+00	0.000E+00	0.000E+00	0.000E+00	0.000E+00	0.000E+00
XE142	0.000E+00	0.000E+00	0.000E+00	0.000E+00	0.000E+00	0.000E+00	0.000E+00	0.000E+00	0.000E+00	0.000E+00	0.000E+00	0.000E+00
CS142	0.000E+00	0.000E+00	0.000E+00	0.000E+00	0.000E+00	0.000E+00	0.000E+00	0.000E+00	0.000E+00	0.000E+00	0.000E+00	0.000E+00
BA142	0.000E+00	0.000E+00	0.000E+00	0.000E+00	0.000E+00	0.000E+00	0.000E+00	0.000E+00	0.000E+00	0.000E+00	0.000E+00	0.000E+00
LA142	0.000E+00	0.000E+00	0.000E+00	0.000E+00	0.000E+00	0.000E+00	0.000E+00	0.000E+00	0.000E+00	0.000E+00	0.000E+00	0.000E+00
CE142	0.000E+00	0.000E+00	0.000E+00	0.000E+00	0.000E+00	0.000E+00	0.000E+00	0.000E+00	0.000E+00	0.000E+00	0.000E+00	0.000E+00
PR142	0.000E+00	0.000E+00	0.000E+00	0.000E+00	0.000E+00	0.000E+00	0.000E+00	0.000E+00	0.000E+00	0.000E+00	0.000E+00	0.000E+00
PR142M	0.000E+00	0.000E+00	0.000E+00	0.000E+00	0.000E+00	0.000E+00	0.000E+00	0.000E+00	0.000E+00	0.000E+00	0.000E+00	0.000E+00
ND142	0.000E+00	0.000E+00	0.000E+00	0.000E+00	0.000E+00	0.000E+00	0.000E+00	0.000E+00	0.000E+00	0.000E+00	0.000E+00	0.000E+00
I143	0.000E+00	0.000E+00	0.000E+00	0.000E+00	0.000E+00	0.000E+00	0.000E+00	0.000E+00	0.000E+00	0.000E+00	0.000E+00	0.000E+00
XE143	0.000E+00	0.000E+00	0.000E+00	0.000E+00	0.000E+00	0.000E+00	0.000E+00	0.000E+00	0.000E+00	0.000E+00	0.000E+00	0.000E+00
CS143	0.000E+00	0.000E+00	0.000E+00	0.000E+00	0.000E+00	0.000E+00	0.000E+00	0.000E+00	0.000E+00	0.000E+00	0.000E+00	0.000E+00
BA143	0.000E+00	0.000E+00	0.000E+00	0.000E+00	0.000E+00	0.000E+00	0.000E+00	0.000E+00	0.000E+00	0.000E+00	0.000E+00	0.000E+00
LA143	0.000E+00	0.000E+00	0.000E+00	0.000E+00	0.000E+00	0.000E+00	0.000E+00	0.000E+00	0.000E+00	0.000E+00	0.000E+00	0.000E+00
CE143	0.000E+00	0.000E+00	0.000E+00	0.000E+00	0.000E+00	0.000E+00	0.000E+00	0.000E+00	0.000E+00	0.000E+00	0.000E+00	0.000E+00
PR143	0.000E+00	0.000E+00	0.000E+00	0.000E+00	0.000E+00	0.000E+00	0.000E+00	0.000E+00	0.000E+00	0.000E+00	0.000E+00	0.000E+00
ND143	0.000E+00	0.000E+00	0.000E+00	0.000E+00	0.000E+00	0.000E+00	0.000E+00	0.000E+00	0.000E+00	0.000E+00	0.000E+00	0.000E+00
I144	0.000E+00	0.000E+00	0.000E+00	0.000E+00	0.000E+00	0.000E+00	0.000E+00	0.000E+00	0.000E+00	0.000E+00	0.000E+00	0.000E+00
XE144	0.000E+00	0.000E+00	0.000E+00	0.000E+00	0.000E+00	0.000E+00	0.000E+00	0.000E+00	0.000E+00	0.000E+00	0.000E+00	0.000E+00
CS144	0.000E+00	0.000E+00	0.000E+00	0.000E+00	0.000E+00	0.000E+00	0.000E+00	0.000E+00	0.000E+00	0.000E+00	0.000E+00	0.000E+00
BA144	0.000E+00	0.000E+00	0.000E+00	0.000E+00	0.000E+00	0.000E+00	0.000E+00	0.000E+00	0.000E+00	0.000E+00	0.000E+00	0.000E+00
LA144	0.000E+00	0.000E+00	0.000E+00	0.000E+00	0.000E+00	0.000E+00	0.000E+00	0.000E+00	0.000E+00	0.000E+00	0.000E+00	0.000E+00
CE144	0.000E+00	0.000E+00	0.000E+00	0.000E+00	0.000E+00	0.000E+00	0.000E+00	0.000E+00	0.000E+00	0.000E+00	0.000E+00	0.000E+00
PR144	0.000E+00	0.000E+00	0.000E+00	0.000E+00	0.000E+00	0.000E+00	0.000E+00	0.000E+00	0.000E+00	0.000E+00	0.000E+00	0.000E+00
PR144M	0.000E+00	0.000E+00	0.000E+00	0.000E+00	0.000E+00	0.000E+00	0.000E+00	0.000E+00	0.000E+00	0.000E+00	0.000E+00	0.000E+00
ND144	0.000E+00	0.000E+00	0.000E+00	0.000E+00	0.000E+00	0.000E+00	0.000E+00	0.000E+00	0.000E+00	0.000E+00	0.000E+00	0.000E+00
I145	0.000E+00	0.000E+00	0.000E+00	0.000E+00	0.000E+00	0.000E+00	0.000E+00	0.000E+00	0.000E+00	0.000E+00	0.000E+00	0.000E+00
XE145	0.000E+00	0.000E+00	0.000E+00	0.000E+00	0.000E+00	0.000E+00	0.000E+00	0.000E+00	0.000E+00	0.000E+00	0.000E+00	0.000E+00
CS145	0.000E+00	0.000E+00	0.000E+00	0.000E+00	0.000E+00	0.000E+00	0.000E+00	0.000E+00	0.000E+00	0.000E+00	0.000E+00	0.000E+00
BA145	0.000E+00	0.000E+00	0.000E+00	0.000E+00	0.000E+00	0.000E+00	0.000E+00	0.000E+00	0.000E+00	0.000E+00	0.000E+00	0.000E+00
LA145	0.000E+00	0.000E+00	0.000E+00	0.000E+00	0.000E+00	0.000E+00	0.000E+00	0.000E+00	0.000E+00	0.000E+00	0.000E+00	0.000E+00
CE145	0.000E+00	0.000E+00	0.000E+00	0.000E+00	0.000E+00	0.000E+00	0.000E+00	0.000E+00	0.000E+00	0.000E+00	0.000E+00	0.000E+00
PR145	0.000E+00	0.000E+00	0.000E+00	0.000E+00	0.000E+00	0.000E+00	0.000E+00	0.000E+00	0.000E+00	0.000E+00	0.000E+00	0.000E+00
ND145	0.000E+00	0.000E+00	0.000E+00	0.000E+00	0.000E+00	0.000E+00	0.000E+00	0.000E+00	0.000E+00	0.000E+00	0.000E+00	0.000E+00
PM145	0.000E+00	0.000E+00	0.000E+00	0.000E+00	0.000E+00	0.000E+00	0.000E+00	0.000E+00	0.000E+00	0.000E+00	0.000E+00	0.000E+00
SM145	0.000E+00	0.000E+00	0.000E+00	0.000E+00	0.000E+00	0.000E+00	0.000E+00	0.000E+00	0.000E+00	0.000E+00	0.000E+00	0.000E+00
XE146	0.000E+00	0.000E+00	0.000E+00	0.000E+00	0.000E+00	0.000E+00	0.000E+00	0.000E+00	0.000E+00	0.000E+00	0.000E+00	0.000E+00
CS146	0.000E+00	0.000E+00	0.000E+00	0.000E+00	0.000E+00	0.000E+00	0.000E+00	0.000E+00	0.000E+00	0.000E+00	0.000E+00	0.000E+00
BA146	0.000E+00	0.000E+00	0.000E+00	0.000E+00	0.000E+00	0.000E+00	0.000E+00	0.000E+00	0.000E+00	0.000E+00	0.000E+00	0.000E+00
LA146	0.000E+00	0.000E+00	0.000E+00	0.000E+00	0.000E+00	0.000E+00	0.000E+00	0.000E+00	0.000E+00	0.000E+00	0.000E+00	0.000E+00
CE146	0.000E+00	0.000E+00	0.000E+00	0.000E+00	0.000E+00	0.000E+00	0.000E+00	0.000E+00	0.000E+00	0.000E+00	0.000E+00	0.000E+00
PR146	0.000E+00	0.000E+00	0.000E+00	0.000E+00	0.000E+00	0.000E+00	0.000E+00	0.000E+00	0.000E+00	0.000E+00	0.000E+00	0.000E+00
ND146	0.000E+00	0.000E+00	0.000E+00	0.000E+00	0.000E+00	0.000E+00	0.000E+00	0.000E+00	0.000E+00	0.000E+00	0.000E+00	0.000E+00
PM146	0.000E+00	0.000E+00	0.000E+00	0.000E+00	0.000E+00	0.000E+00	0.000E+00	0.000E+00	0.000E+00	0.000E+00	0.000E+00	0.000E+00
SM146	0.000E+00	0.000E+00	0.000E+00	0.000E+00	0.000E+00	0.000E+00	0.000E+00	0.000E+00	0.000E+00	0.000E+00	0.000E+00	0.000E+00
XE147	0.000E+00	0.000E+00	0.000E+00	0.000E+00	0.000E+00	0.000E+00	0.000E+00	0.000E+00	0.000E+00	0.000E+00	0.000E+00	0.000E+00
CS147	0.000E+00	0.000E+00	0.000E+00	0.000E+00	0.000E+00	0.000E+00	0.000E+00	0.000E+00	0.000E+00	0.000E+00	0.000E+00	0.000E+00
BA147	0.000E+00	0.000E+00	0.000E+00	0.000E+00	0.000E+00	0.000E+00	0.000E+00	0.000E+00	0.000E+00	0.000E+00	0.000E+00	0.000E+00

```
1                                                                    OUTPUT UNIT = 11                                    PAGE   16
 ORIGEN2 V2.1 (8-1-91), Run on 03/10/04    at 13:15:17

     * Decay of containment activity on a per cc basis
+                                                                                                   FISSION PRODUCTS
     POWER= 1.00000E+00 MW,  BURNUP= 1.00000E+00 MWD,  FLUX= 1.00E+00 N/CM**2-SEC
0                    5 NUCLIDE TABLE:  CONCENTRATIONS, GRAMS
```

0 HR	1 HR	2 HR	4 HR	8 HR	12 HR	24 HR	48 HR	72 HR	96 HR	144 HR	288 HR

LA147	0.000E+00	0.000E+00	0.000E+00	0.000E+00	0.000E+00	0.000E+00	0.000E+00	0.000E+00	0.000E+00	0.000E+00	0.000E+00	0.000E+00
CE147	0.000E+00	0.000E+00	0.000E+00	0.000E+00	0.000E+00	0.000E+00	0.000E+00	0.000E+00	0.000E+00	0.000E+00	0.000E+00	0.000E+00
PR147	0.000E+00	0.000E+00	0.000E+00	0.000E+00	0.000E+00	0.000E+00	0.000E+00	0.000E+00	0.000E+00	0.000E+00	0.000E+00	0.000E+00
ND147	0.000E+00	0.000E+00	0.000E+00	0.000E+00	0.000E+00	0.000E+00	0.000E+00	0.000E+00	0.000E+00	0.000E+00	0.000E+00	0.000E+00
PM147	0.000E+00	0.000E+00	0.000E+00	0.000E+00	0.000E+00	0.000E+00	0.000E+00	0.000E+00	0.000E+00	0.000E+00	0.000E+00	0.000E+00
SM147	0.000E+00	0.000E+00	0.000E+00	0.000E+00	0.000E+00	0.000E+00	0.000E+00	0.000E+00	0.000E+00	0.000E+00	0.000E+00	0.000E+00
CS148	0.000E+00	0.000E+00	0.000E+00	0.000E+00	0.000E+00	0.000E+00	0.000E+00	0.000E+00	0.000E+00	0.000E+00	0.000E+00	0.000E+00
BA148	0.000E+00	0.000E+00	0.000E+00	0.000E+00	0.000E+00	0.000E+00	0.000E+00	0.000E+00	0.000E+00	0.000E+00	0.000E+00	0.000E+00
LA148	0.000E+00	0.000E+00	0.000E+00	0.000E+00	0.000E+00	0.000E+00	0.000E+00	0.000E+00	0.000E+00	0.000E+00	0.000E+00	0.000E+00
CE148	0.000E+00	0.000E+00	0.000E+00	0.000E+00	0.000E+00	0.000E+00	0.000E+00	0.000E+00	0.000E+00	0.000E+00	0.000E+00	0.000E+00
PR148	0.000E+00	0.000E+00	0.000E+00	0.000E+00	0.000E+00	0.000E+00	0.000E+00	0.000E+00	0.000E+00	0.000E+00	0.000E+00	0.000E+00
ND148	0.000E+00	0.000E+00	0.000E+00	0.000E+00	0.000E+00	0.000E+00	0.000E+00	0.000E+00	0.000E+00	0.000E+00	0.000E+00	0.000E+00
PM148	0.000E+00	0.000E+00	0.000E+00	0.000E+00	0.000E+00	0.000E+00	0.000E+00	0.000E+00	0.000E+00	0.000E+00	0.000E+00	0.000E+00
PM148M	0.000E+00	0.000E+00	0.000E+00	0.000E+00	0.000E+00	0.000E+00	0.000E+00	0.000E+00	0.000E+00	0.000E+00	0.000E+00	0.000E+00
SM148	0.000E+00	0.000E+00	0.000E+00	0.000E+00	0.000E+00	0.000E+00	0.000E+00	0.000E+00	0.000E+00	0.000E+00	0.000E+00	0.000E+00
CS149	0.000E+00	0.000E+00	0.000E+00	0.000E+00	0.000E+00	0.000E+00	0.000E+00	0.000E+00	0.000E+00	0.000E+00	0.000E+00	0.000E+00
BA149	0.000E+00	0.000E+00	0.000E+00	0.000E+00	0.000E+00	0.000E+00	0.000E+00	0.000E+00	0.000E+00	0.000E+00	0.000E+00	0.000E+00
LA149	0.000E+00	0.000E+00	0.000E+00	0.000E+00	0.000E+00	0.000E+00	0.000E+00	0.000E+00	0.000E+00	0.000E+00	0.000E+00	0.000E+00
CE149	0.000E+00	0.000E+00	0.000E+00	0.000E+00	0.000E+00	0.000E+00	0.000E+00	0.000E+00	0.000E+00	0.000E+00	0.000E+00	0.000E+00
PR149	0.000E+00	0.000E+00	0.000E+00	0.000E+00	0.000E+00	0.000E+00	0.000E+00	0.000E+00	0.000E+00	0.000E+00	0.000E+00	0.000E+00
ND149	0.000E+00	0.000E+00	0.000E+00	0.000E+00	0.000E+00	0.000E+00	0.000E+00	0.000E+00	0.000E+00	0.000E+00	0.000E+00	0.000E+00
PM149	0.000E+00	0.000E+00	0.000E+00	0.000E+00	0.000E+00	0.000E+00	0.000E+00	0.000E+00	0.000E+00	0.000E+00	0.000E+00	0.000E+00
SM149	0.000E+00	0.000E+00	0.000E+00	0.000E+00	0.000E+00	0.000E+00	0.000E+00	0.000E+00	0.000E+00	0.000E+00	0.000E+00	0.000E+00
EU149	0.000E+00	0.000E+00	0.000E+00	0.000E+00	0.000E+00	0.000E+00	0.000E+00	0.000E+00	0.000E+00	0.000E+00	0.000E+00	0.000E+00
CS150	0.000E+00	0.000E+00	0.000E+00	0.000E+00	0.000E+00	0.000E+00	0.000E+00	0.000E+00	0.000E+00	0.000E+00	0.000E+00	0.000E+00
BA150	0.000E+00	0.000E+00	0.000E+00	0.000E+00	0.000E+00	0.000E+00	0.000E+00	0.000E+00	0.000E+00	0.000E+00	0.000E+00	0.000E+00
LA150	0.000E+00	0.000E+00	0.000E+00	0.000E+00	0.000E+00	0.000E+00	0.000E+00	0.000E+00	0.000E+00	0.000E+00	0.000E+00	0.000E+00
CE150	0.000E+00	0.000E+00	0.000E+00	0.000E+00	0.000E+00	0.000E+00	0.000E+00	0.000E+00	0.000E+00	0.000E+00	0.000E+00	0.000E+00
PR150	0.000E+00	0.000E+00	0.000E+00	0.000E+00	0.000E+00	0.000E+00	0.000E+00	0.000E+00	0.000E+00	0.000E+00	0.000E+00	0.000E+00
ND150	0.000E+00	0.000E+00	0.000E+00	0.000E+00	0.000E+00	0.000E+00	0.000E+00	0.000E+00	0.000E+00	0.000E+00	0.000E+00	0.000E+00
PM150	0.000E+00	0.000E+00	0.000E+00	0.000E+00	0.000E+00	0.000E+00	0.000E+00	0.000E+00	0.000E+00	0.000E+00	0.000E+00	0.000E+00
SM150	0.000E+00	0.000E+00	0.000E+00	0.000E+00	0.000E+00	0.000E+00	0.000E+00	0.000E+00	0.000E+00	0.000E+00	0.000E+00	0.000E+00
EU150	0.000E+00	0.000E+00	0.000E+00	0.000E+00	0.000E+00	0.000E+00	0.000E+00	0.000E+00	0.000E+00	0.000E+00	0.000E+00	0.000E+00
BA151	0.000E+00	0.000E+00	0.000E+00	0.000E+00	0.000E+00	0.000E+00	0.000E+00	0.000E+00	0.000E+00	0.000E+00	0.000E+00	0.000E+00
LA151	0.000E+00	0.000E+00	0.000E+00	0.000E+00	0.000E+00	0.000E+00	0.000E+00	0.000E+00	0.000E+00	0.000E+00	0.000E+00	0.000E+00
CE151	0.000E+00	0.000E+00	0.000E+00	0.000E+00	0.000E+00	0.000E+00	0.000E+00	0.000E+00	0.000E+00	0.000E+00	0.000E+00	0.000E+00
PR151	0.000E+00	0.000E+00	0.000E+00	0.000E+00	0.000E+00	0.000E+00	0.000E+00	0.000E+00	0.000E+00	0.000E+00	0.000E+00	0.000E+00
ND151	0.000E+00	0.000E+00	0.000E+00	0.000E+00	0.000E+00	0.000E+00	0.000E+00	0.000E+00	0.000E+00	0.000E+00	0.000E+00	0.000E+00
PM151	0.000E+00	0.000E+00	0.000E+00	0.000E+00	0.000E+00	0.000E+00	0.000E+00	0.000E+00	0.000E+00	0.000E+00	0.000E+00	0.000E+00
SM151	0.000E+00	0.000E+00	0.000E+00	0.000E+00	0.000E+00	0.000E+00	0.000E+00	0.000E+00	0.000E+00	0.000E+00	0.000E+00	0.000E+00
EU151	0.000E+00	0.000E+00	0.000E+00	0.000E+00	0.000E+00	0.000E+00	0.000E+00	0.000E+00	0.000E+00	0.000E+00	0.000E+00	0.000E+00
BA152	0.000E+00	0.000E+00	0.000E+00	0.000E+00	0.000E+00	0.000E+00	0.000E+00	0.000E+00	0.000E+00	0.000E+00	0.000E+00	0.000E+00
LA152	0.000E+00	0.000E+00	0.000E+00	0.000E+00	0.000E+00	0.000E+00	0.000E+00	0.000E+00	0.000E+00	0.000E+00	0.000E+00	0.000E+00
CE152	0.000E+00	0.000E+00	0.000E+00	0.000E+00	0.000E+00	0.000E+00	0.000E+00	0.000E+00	0.000E+00	0.000E+00	0.000E+00	0.000E+00
PR152	0.000E+00	0.000E+00	0.000E+00	0.000E+00	0.000E+00	0.000E+00	0.000E+00	0.000E+00	0.000E+00	0.000E+00	0.000E+00	0.000E+00
ND152	0.000E+00	0.000E+00	0.000E+00	0.000E+00	0.000E+00	0.000E+00	0.000E+00	0.000E+00	0.000E+00	0.000E+00	0.000E+00	0.000E+00
PM152	0.000E+00	0.000E+00	0.000E+00	0.000E+00	0.000E+00	0.000E+00	0.000E+00	0.000E+00	0.000E+00	0.000E+00	0.000E+00	0.000E+00
PM152M	0.000E+00	0.000E+00	0.000E+00	0.000E+00	0.000E+00	0.000E+00	0.000E+00	0.000E+00	0.000E+00	0.000E+00	0.000E+00	0.000E+00
SM152	0.000E+00	0.000E+00	0.000E+00	0.000E+00	0.000E+00	0.000E+00	0.000E+00	0.000E+00	0.000E+00	0.000E+00	0.000E+00	0.000E+00
EU152	0.000E+00	0.000E+00	0.000E+00	0.000E+00	0.000E+00	0.000E+00	0.000E+00	0.000E+00	0.000E+00	0.000E+00	0.000E+00	0.000E+00
EU152M	0.000E+00	0.000E+00	0.000E+00	0.000E+00	0.000E+00	0.000E+00	0.000E+00	0.000E+00	0.000E+00	0.000E+00	0.000E+00	0.000E+00

```
1                                                                    OUTPUT UNIT = 11                                    PAGE   17
 ORIGEN2 V2.1 (8-1-91), Run on 03/10/04     at 13:15:17

     *  Decay of containment activity on a per cc basis
+                                                                                                   FISSION PRODUCTS
     POWER= 1.00000E+00 MW,  BURNUP= 1.00000E+00 MWD,  FLUX= 1.00E+00 N/CM**2-SEC
0                    5 NUCLIDE TABLE:  CONCENTRATIONS, GRAMS
```

	0 HR	1 HR	2 HR	4 HR	8 HR	12 HR	24 HR	48 HR	72 HR	96 HR	144 HR	288 HR
GD152	0.000E+00	0.000E+00	0.000E+00	0.000E+00	0.000E+00	0.000E+00	0.000E+00	0.000E+00	0.000E+00	0.000E+00	0.000E+00	0.000E+00
LA153	0.000E+00	0.000E+00	0.000E+00	0.000E+00	0.000E+00	0.000E+00	0.000E+00	0.000E+00	0.000E+00	0.000E+00	0.000E+00	0.000E+00
CE153	0.000E+00	0.000E+00	0.000E+00	0.000E+00	0.000E+00	0.000E+00	0.000E+00	0.000E+00	0.000E+00	0.000E+00	0.000E+00	0.000E+00
PR153	0.000E+00	0.000E+00	0.000E+00	0.000E+00	0.000E+00	0.000E+00	0.000E+00	0.000E+00	0.000E+00	0.000E+00	0.000E+00	0.000E+00
ND153	0.000E+00	0.000E+00	0.000E+00	0.000E+00	0.000E+00	0.000E+00	0.000E+00	0.000E+00	0.000E+00	0.000E+00	0.000E+00	0.000E+00
PM153	0.000E+00	0.000E+00	0.000E+00	0.000E+00	0.000E+00	0.000E+00	0.000E+00	0.000E+00	0.000E+00	0.000E+00	0.000E+00	0.000E+00
SM153	0.000E+00	0.000E+00	0.000E+00	0.000E+00	0.000E+00	0.000E+00	0.000E+00	0.000E+00	0.000E+00	0.000E+00	0.000E+00	0.000E+00
EU153	0.000E+00	0.000E+00	0.000E+00	0.000E+00	0.000E+00	0.000E+00	0.000E+00	0.000E+00	0.000E+00	0.000E+00	0.000E+00	0.000E+00
GD153	0.000E+00	0.000E+00	0.000E+00	0.000E+00	0.000E+00	0.000E+00	0.000E+00	0.000E+00	0.000E+00	0.000E+00	0.000E+00	0.000E+00
LA154	0.000E+00	0.000E+00	0.000E+00	0.000E+00	0.000E+00	0.000E+00	0.000E+00	0.000E+00	0.000E+00	0.000E+00	0.000E+00	0.000E+00
CE154	0.000E+00	0.000E+00	0.000E+00	0.000E+00	0.000E+00	0.000E+00	0.000E+00	0.000E+00	0.000E+00	0.000E+00	0.000E+00	0.000E+00
PR154	0.000E+00	0.000E+00	0.000E+00	0.000E+00	0.000E+00	0.000E+00	0.000E+00	0.000E+00	0.000E+00	0.000E+00	0.000E+00	0.000E+00
ND154	0.000E+00	0.000E+00	0.000E+00	0.000E+00	0.000E+00	0.000E+00	0.000E+00	0.000E+00	0.000E+00	0.000E+00	0.000E+00	0.000E+00
PM154	0.000E+00	0.000E+00	0.000E+00	0.000E+00	0.000E+00	0.000E+00	0.000E+00	0.000E+00	0.000E+00	0.000E+00	0.000E+00	0.000E+00
PM154M	0.000E+00	0.000E+00	0.000E+00	0.000E+00	0.000E+00	0.000E+00	0.000E+00	0.000E+00	0.000E+00	0.000E+00	0.000E+00	0.000E+00
SM154	0.000E+00	0.000E+00	0.000E+00	0.000E+00	0.000E+00	0.000E+00	0.000E+00	0.000E+00	0.000E+00	0.000E+00	0.000E+00	0.000E+00
EU154	0.000E+00	0.000E+00	0.000E+00	0.000E+00	0.000E+00	0.000E+00	0.000E+00	0.000E+00	0.000E+00	0.000E+00	0.000E+00	0.000E+00
GD154	0.000E+00	0.000E+00	0.000E+00	0.000E+00	0.000E+00	0.000E+00	0.000E+00	0.000E+00	0.000E+00	0.000E+00	0.000E+00	0.000E+00
LA155	0.000E+00	0.000E+00	0.000E+00	0.000E+00	0.000E+00	0.000E+00	0.000E+00	0.000E+00	0.000E+00	0.000E+00	0.000E+00	0.000E+00
CE155	0.000E+00	0.000E+00	0.000E+00	0.000E+00	0.000E+00	0.000E+00	0.000E+00	0.000E+00	0.000E+00	0.000E+00	0.000E+00	0.000E+00
PR155	0.000E+00	0.000E+00	0.000E+00	0.000E+00	0.000E+00	0.000E+00	0.000E+00	0.000E+00	0.000E+00	0.000E+00	0.000E+00	0.000E+00
ND155	0.000E+00	0.000E+00	0.000E+00	0.000E+00	0.000E+00	0.000E+00	0.000E+00	0.000E+00	0.000E+00	0.000E+00	0.000E+00	0.000E+00
PM155	0.000E+00	0.000E+00	0.000E+00	0.000E+00	0.000E+00	0.000E+00	0.000E+00	0.000E+00	0.000E+00	0.000E+00	0.000E+00	0.000E+00
SM155	0.000E+00	0.000E+00	0.000E+00	0.000E+00	0.000E+00	0.000E+00	0.000E+00	0.000E+00	0.000E+00	0.000E+00	0.000E+00	0.000E+00
EU155	0.000E+00	0.000E+00	0.000E+00	0.000E+00	0.000E+00	0.000E+00	0.000E+00	0.000E+00	0.000E+00	0.000E+00	0.000E+00	0.000E+00
GD155M	0.000E+00	0.000E+00	0.000E+00	0.000E+00	0.000E+00	0.000E+00	0.000E+00	0.000E+00	0.000E+00	0.000E+00	0.000E+00	0.000E+00
GD155	0.000E+00	0.000E+00	0.000E+00	0.000E+00	0.000E+00	0.000E+00	0.000E+00	0.000E+00	0.000E+00	0.000E+00	0.000E+00	0.000E+00
CE156	0.000E+00	0.000E+00	0.000E+00	0.000E+00	0.000E+00	0.000E+00	0.000E+00	0.000E+00	0.000E+00	0.000E+00	0.000E+00	0.000E+00
PR156	0.000E+00	0.000E+00	0.000E+00	0.000E+00	0.000E+00	0.000E+00	0.000E+00	0.000E+00	0.000E+00	0.000E+00	0.000E+00	0.000E+00
ND156	0.000E+00	0.000E+00	0.000E+00	0.000E+00	0.000E+00	0.000E+00	0.000E+00	0.000E+00	0.000E+00	0.000E+00	0.000E+00	0.000E+00
PM156	0.000E+00	0.000E+00	0.000E+00	0.000E+00	0.000E+00	0.000E+00	0.000E+00	0.000E+00	0.000E+00	0.000E+00	0.000E+00	0.000E+00
SM156	0.000E+00	0.000E+00	0.000E+00	0.000E+00	0.000E+00	0.000E+00	0.000E+00	0.000E+00	0.000E+00	0.000E+00	0.000E+00	0.000E+00
EU156	0.000E+00	0.000E+00	0.000E+00	0.000E+00	0.000E+00	0.000E+00	0.000E+00	0.000E+00	0.000E+00	0.000E+00	0.000E+00	0.000E+00
GD156	0.000E+00	0.000E+00	0.000E+00	0.000E+00	0.000E+00	0.000E+00	0.000E+00	0.000E+00	0.000E+00	0.000E+00	0.000E+00	0.000E+00
CE157	0.000E+00	0.000E+00	0.000E+00	0.000E+00	0.000E+00	0.000E+00	0.000E+00	0.000E+00	0.000E+00	0.000E+00	0.000E+00	0.000E+00
PR157	0.000E+00	0.000E+00	0.000E+00	0.000E+00	0.000E+00	0.000E+00	0.000E+00	0.000E+00	0.000E+00	0.000E+00	0.000E+00	0.000E+00
ND157	0.000E+00	0.000E+00	0.000E+00	0.000E+00	0.000E+00	0.000E+00	0.000E+00	0.000E+00	0.000E+00	0.000E+00	0.000E+00	0.000E+00
PM157	0.000E+00	0.000E+00	0.000E+00	0.000E+00	0.000E+00	0.000E+00	0.000E+00	0.000E+00	0.000E+00	0.000E+00	0.000E+00	0.000E+00
SM157	0.000E+00	0.000E+00	0.000E+00	0.000E+00	0.000E+00	0.000E+00	0.000E+00	0.000E+00	0.000E+00	0.000E+00	0.000E+00	0.000E+00
EU157	0.000E+00	0.000E+00	0.000E+00	0.000E+00	0.000E+00	0.000E+00	0.000E+00	0.000E+00	0.000E+00	0.000E+00	0.000E+00	0.000E+00
GD157	0.000E+00	0.000E+00	0.000E+00	0.000E+00	0.000E+00	0.000E+00	0.000E+00	0.000E+00	0.000E+00	0.000E+00	0.000E+00	0.000E+00
PR158	0.000E+00	0.000E+00	0.000E+00	0.000E+00	0.000E+00	0.000E+00	0.000E+00	0.000E+00	0.000E+00	0.000E+00	0.000E+00	0.000E+00
ND158	0.000E+00	0.000E+00	0.000E+00	0.000E+00	0.000E+00	0.000E+00	0.000E+00	0.000E+00	0.000E+00	0.000E+00	0.000E+00	0.000E+00
PM158	0.000E+00	0.000E+00	0.000E+00	0.000E+00	0.000E+00	0.000E+00	0.000E+00	0.000E+00	0.000E+00	0.000E+00	0.000E+00	0.000E+00
SM158	0.000E+00	0.000E+00	0.000E+00	0.000E+00	0.000E+00	0.000E+00	0.000E+00	0.000E+00	0.000E+00	0.000E+00	0.000E+00	0.000E+00
EU158	0.000E+00	0.000E+00	0.000E+00	0.000E+00	0.000E+00	0.000E+00	0.000E+00	0.000E+00	0.000E+00	0.000E+00	0.000E+00	0.000E+00
GD158	0.000E+00	0.000E+00	0.000E+00	0.000E+00	0.000E+00	0.000E+00	0.000E+00	0.000E+00	0.000E+00	0.000E+00	0.000E+00	0.000E+00
PR159	0.000E+00	0.000E+00	0.000E+00	0.000E+00	0.000E+00	0.000E+00	0.000E+00	0.000E+00	0.000E+00	0.000E+00	0.000E+00	0.000E+00
ND159	0.000E+00	0.000E+00	0.000E+00	0.000E+00	0.000E+00	0.000E+00	0.000E+00	0.000E+00	0.000E+00	0.000E+00	0.000E+00	0.000E+00
PM159	0.000E+00	0.000E+00	0.000E+00	0.000E+00	0.000E+00	0.000E+00	0.000E+00	0.000E+00	0.000E+00	0.000E+00	0.000E+00	0.000E+00
SM159	0.000E+00	0.000E+00	0.000E+00	0.000E+00	0.000E+00	0.000E+00	0.000E+00	0.000E+00	0.000E+00	0.000E+00	0.000E+00	0.000E+00

1 OUTPUT UNIT = 11 PAGE 18

ORIGEN2 V2.1 (8-1-91), Run on 03/10/04 at 13:15:17

* Decay of containment activity on a per cc basis

\+ FISSION PRODUCTS

POWER= 1.00000E+00 MW, BURNUP= 1.00000E+00 MWD, FLUX= 1.00E+00 N/CM**2-SEC

0 5 NUCLIDE TABLE: CONCENTRATIONS, GRAMS

	0 HR	1 HR	2 HR	4 HR	8 HR	12 HR	24 HR	48 HR	72 HR	96 HR	144 HR	288 HR
EU159	0.000E+00	0.000E+00	0.000E+00	0.000E+00	0.000E+00	0.000E+00	0.000E+00	0.000E+00	0.000E+00	0.000E+00	0.000E+00	0.000E+00
GD159	0.000E+00	0.000E+00	0.000E+00	0.000E+00	0.000E+00	0.000E+00	0.000E+00	0.000E+00	0.000E+00	0.000E+00	0.000E+00	0.000E+00
TB159	0.000E+00	0.000E+00	0.000E+00	0.000E+00	0.000E+00	0.000E+00	0.000E+00	0.000E+00	0.000E+00	0.000E+00	0.000E+00	0.000E+00
ND160	0.000E+00	0.000E+00	0.000E+00	0.000E+00	0.000E+00	0.000E+00	0.000E+00	0.000E+00	0.000E+00	0.000E+00	0.000E+00	0.000E+00
PM160	0.000E+00	0.000E+00	0.000E+00	0.000E+00	0.000E+00	0.000E+00	0.000E+00	0.000E+00	0.000E+00	0.000E+00	0.000E+00	0.000E+00
SM160	0.000E+00	0.000E+00	0.000E+00	0.000E+00	0.000E+00	0.000E+00	0.000E+00	0.000E+00	0.000E+00	0.000E+00	0.000E+00	0.000E+00
EU160	0.000E+00	0.000E+00	0.000E+00	0.000E+00	0.000E+00	0.000E+00	0.000E+00	0.000E+00	0.000E+00	0.000E+00	0.000E+00	0.000E+00
GD160	0.000E+00	0.000E+00	0.000E+00	0.000E+00	0.000E+00	0.000E+00	0.000E+00	0.000E+00	0.000E+00	0.000E+00	0.000E+00	0.000E+00
TB160	0.000E+00	0.000E+00	0.000E+00	0.000E+00	0.000E+00	0.000E+00	0.000E+00	0.000E+00	0.000E+00	0.000E+00	0.000E+00	0.000E+00
DY160	0.000E+00	0.000E+00	0.000E+00	0.000E+00	0.000E+00	0.000E+00	0.000E+00	0.000E+00	0.000E+00	0.000E+00	0.000E+00	0.000E+00
ND161	0.000E+00	0.000E+00	0.000E+00	0.000E+00	0.000E+00	0.000E+00	0.000E+00	0.000E+00	0.000E+00	0.000E+00	0.000E+00	0.000E+00
PM161	0.000E+00	0.000E+00	0.000E+00	0.000E+00	0.000E+00	0.000E+00	0.000E+00	0.000E+00	0.000E+00	0.000E+00	0.000E+00	0.000E+00
SM161	0.000E+00	0.000E+00	0.000E+00	0.000E+00	0.000E+00	0.000E+00	0.000E+00	0.000E+00	0.000E+00	0.000E+00	0.000E+00	0.000E+00
EU161	0.000E+00	0.000E+00	0.000E+00	0.000E+00	0.000E+00	0.000E+00	0.000E+00	0.000E+00	0.000E+00	0.000E+00	0.000E+00	0.000E+00
GD161	0.000E+00	0.000E+00	0.000E+00	0.000E+00	0.000E+00	0.000E+00	0.000E+00	0.000E+00	0.000E+00	0.000E+00	0.000E+00	0.000E+00
TB161	0.000E+00	0.000E+00	0.000E+00	0.000E+00	0.000E+00	0.000E+00	0.000E+00	0.000E+00	0.000E+00	0.000E+00	0.000E+00	0.000E+00
DY161	0.000E+00	0.000E+00	0.000E+00	0.000E+00	0.000E+00	0.000E+00	0.000E+00	0.000E+00	0.000E+00	0.000E+00	0.000E+00	0.000E+00
PM162	0.000E+00	0.000E+00	0.000E+00	0.000E+00	0.000E+00	0.000E+00	0.000E+00	0.000E+00	0.000E+00	0.000E+00	0.000E+00	0.000E+00
SM162	0.000E+00	0.000E+00	0.000E+00	0.000E+00	0.000E+00	0.000E+00	0.000E+00	0.000E+00	0.000E+00	0.000E+00	0.000E+00	0.000E+00
EU162	0.000E+00	0.000E+00	0.000E+00	0.000E+00	0.000E+00	0.000E+00	0.000E+00	0.000E+00	0.000E+00	0.000E+00	0.000E+00	0.000E+00
GD162	0.000E+00	0.000E+00	0.000E+00	0.000E+00	0.000E+00	0.000E+00	0.000E+00	0.000E+00	0.000E+00	0.000E+00	0.000E+00	0.000E+00
TB162	0.000E+00	0.000E+00	0.000E+00	0.000E+00	0.000E+00	0.000E+00	0.000E+00	0.000E+00	0.000E+00	0.000E+00	0.000E+00	0.000E+00
TB162M	0.000E+00	0.000E+00	0.000E+00	0.000E+00	0.000E+00	0.000E+00	0.000E+00	0.000E+00	0.000E+00	0.000E+00	0.000E+00	0.000E+00
DY162	0.000E+00	0.000E+00	0.000E+00	0.000E+00	0.000E+00	0.000E+00	0.000E+00	0.000E+00	0.000E+00	0.000E+00	0.000E+00	0.000E+00
SM163	0.000E+00	0.000E+00	0.000E+00	0.000E+00	0.000E+00	0.000E+00	0.000E+00	0.000E+00	0.000E+00	0.000E+00	0.000E+00	0.000E+00
EU163	0.000E+00	0.000E+00	0.000E+00	0.000E+00	0.000E+00	0.000E+00	0.000E+00	0.000E+00	0.000E+00	0.000E+00	0.000E+00	0.000E+00
GD163	0.000E+00	0.000E+00	0.000E+00	0.000E+00	0.000E+00	0.000E+00	0.000E+00	0.000E+00	0.000E+00	0.000E+00	0.000E+00	0.000E+00
TB163	0.000E+00	0.000E+00	0.000E+00	0.000E+00	0.000E+00	0.000E+00	0.000E+00	0.000E+00	0.000E+00	0.000E+00	0.000E+00	0.000E+00
TB163M	0.000E+00	0.000E+00	0.000E+00	0.000E+00	0.000E+00	0.000E+00	0.000E+00	0.000E+00	0.000E+00	0.000E+00	0.000E+00	0.000E+00
DY163	0.000E+00	0.000E+00	0.000E+00	0.000E+00	0.000E+00	0.000E+00	0.000E+00	0.000E+00	0.000E+00	0.000E+00	0.000E+00	0.000E+00
SM164	0.000E+00	0.000E+00	0.000E+00	0.000E+00	0.000E+00	0.000E+00	0.000E+00	0.000E+00	0.000E+00	0.000E+00	0.000E+00	0.000E+00
EU164	0.000E+00	0.000E+00	0.000E+00	0.000E+00	0.000E+00	0.000E+00	0.000E+00	0.000E+00	0.000E+00	0.000E+00	0.000E+00	0.000E+00
GD164	0.000E+00	0.000E+00	0.000E+00	0.000E+00	0.000E+00	0.000E+00	0.000E+00	0.000E+00	0.000E+00	0.000E+00	0.000E+00	0.000E+00
TB164	0.000E+00	0.000E+00	0.000E+00	0.000E+00	0.000E+00	0.000E+00	0.000E+00	0.000E+00	0.000E+00	0.000E+00	0.000E+00	0.000E+00
DY164	0.000E+00	0.000E+00	0.000E+00	0.000E+00	0.000E+00	0.000E+00	0.000E+00	0.000E+00	0.000E+00	0.000E+00	0.000E+00	0.000E+00
SM165	0.000E+00	0.000E+00	0.000E+00	0.000E+00	0.000E+00	0.000E+00	0.000E+00	0.000E+00	0.000E+00	0.000E+00	0.000E+00	0.000E+00
EU165	0.000E+00	0.000E+00	0.000E+00	0.000E+00	0.000E+00	0.000E+00	0.000E+00	0.000E+00	0.000E+00	0.000E+00	0.000E+00	0.000E+00
GD165	0.000E+00	0.000E+00	0.000E+00	0.000E+00	0.000E+00	0.000E+00	0.000E+00	0.000E+00	0.000E+00	0.000E+00	0.000E+00	0.000E+00
TB165	0.000E+00	0.000E+00	0.000E+00	0.000E+00	0.000E+00	0.000E+00	0.000E+00	0.000E+00	0.000E+00	0.000E+00	0.000E+00	0.000E+00
DY165	0.000E+00	0.000E+00	0.000E+00	0.000E+00	0.000E+00	0.000E+00	0.000E+00	0.000E+00	0.000E+00	0.000E+00	0.000E+00	0.000E+00
DY165M	0.000E+00	0.000E+00	0.000E+00	0.000E+00	0.000E+00	0.000E+00	0.000E+00	0.000E+00	0.000E+00	0.000E+00	0.000E+00	0.000E+00
HO165	0.000E+00	0.000E+00	0.000E+00	0.000E+00	0.000E+00	0.000E+00	0.000E+00	0.000E+00	0.000E+00	0.000E+00	0.000E+00	0.000E+00
DY166	0.000E+00	0.000E+00	0.000E+00	0.000E+00	0.000E+00	0.000E+00	0.000E+00	0.000E+00	0.000E+00	0.000E+00	0.000E+00	0.000E+00
HO166	0.000E+00	0.000E+00	0.000E+00	0.000E+00	0.000E+00	0.000E+00	0.000E+00	0.000E+00	0.000E+00	0.000E+00	0.000E+00	0.000E+00
HO166M	0.000E+00	0.000E+00	0.000E+00	0.000E+00	0.000E+00	0.000E+00	0.000E+00	0.000E+00	0.000E+00	0.000E+00	0.000E+00	0.000E+00
ER166	0.000E+00	0.000E+00	0.000E+00	0.000E+00	0.000E+00	0.000E+00	0.000E+00	0.000E+00	0.000E+00	0.000E+00	0.000E+00	0.000E+00
ER167	0.000E+00	0.000E+00	0.000E+00	0.000E+00	0.000E+00	0.000E+00	0.000E+00	0.000E+00	0.000E+00	0.000E+00	0.000E+00	0.000E+00
ER167M	0.000E+00	0.000E+00	0.000E+00	0.000E+00	0.000E+00	0.000E+00	0.000E+00	0.000E+00	0.000E+00	0.000E+00	0.000E+00	0.000E+00
ER168	0.000E+00	0.000E+00	0.000E+00	0.000E+00	0.000E+00	0.000E+00	0.000E+00	0.000E+00	0.000E+00	0.000E+00	0.000E+00	0.000E+00
YB168	0.000E+00	0.000E+00	0.000E+00	0.000E+00	0.000E+00	0.000E+00	0.000E+00	0.000E+00	0.000E+00	0.000E+00	0.000E+00	0.000E+00
ER169	0.000E+00	0.000E+00	0.000E+00	0.000E+00	0.000E+00	0.000E+00	0.000E+00	0.000E+00	0.000E+00	0.000E+00	0.000E+00	0.000E+00

1 OUTPUT UNIT = 11 PAGE 19

ORIGEN2 V2.1 (8-1-91), Run on 03/10/04 at 13:15:17

```
     * Decay of containment activity on a per cc basis
+                                                                                FISSION PRODUCTS
     POWER= 1.00000E+00 MW,  BURNUP= 1.00000E+00 MWD,  FLUX= 1.00E+00 N/CM**2-SEC
0                    5 NUCLIDE TABLE:  CONCENTRATIONS, GRAMS
```

	0 HR	1 HR	2 HR	4 HR	8 HR	12 HR	24 HR	48 HR	72 HR	96 HR	144 HR	288 HR
TM169	0.000E+00	0.000E+00	0.000E+00	0.000E+00	0.000E+00	0.000E+00	0.000E+00	0.000E+00	0.000E+00	0.000E+00	0.000E+00	0.000E+00
YB169	0.000E+00	0.000E+00	0.000E+00	0.000E+00	0.000E+00	0.000E+00	0.000E+00	0.000E+00	0.000E+00	0.000E+00	0.000E+00	0.000E+00
ER170	0.000E+00	0.000E+00	0.000E+00	0.000E+00	0.000E+00	0.000E+00	0.000E+00	0.000E+00	0.000E+00	0.000E+00	0.000E+00	0.000E+00
TM170	0.000E+00	0.000E+00	0.000E+00	0.000E+00	0.000E+00	0.000E+00	0.000E+00	0.000E+00	0.000E+00	0.000E+00	0.000E+00	0.000E+00
TM170M	0.000E+00	0.000E+00	0.000E+00	0.000E+00	0.000E+00	0.000E+00	0.000E+00	0.000E+00	0.000E+00	0.000E+00	0.000E+00	0.000E+00
YB170	0.000E+00	0.000E+00	0.000E+00	0.000E+00	0.000E+00	0.000E+00	0.000E+00	0.000E+00	0.000E+00	0.000E+00	0.000E+00	0.000E+00
ER171	0.000E+00	0.000E+00	0.000E+00	0.000E+00	0.000E+00	0.000E+00	0.000E+00	0.000E+00	0.000E+00	0.000E+00	0.000E+00	0.000E+00
TM171	0.000E+00	0.000E+00	0.000E+00	0.000E+00	0.000E+00	0.000E+00	0.000E+00	0.000E+00	0.000E+00	0.000E+00	0.000E+00	0.000E+00
YB171	0.000E+00	0.000E+00	0.000E+00	0.000E+00	0.000E+00	0.000E+00	0.000E+00	0.000E+00	0.000E+00	0.000E+00	0.000E+00	0.000E+00
ER172	0.000E+00	0.000E+00	0.000E+00	0.000E+00	0.000E+00	0.000E+00	0.000E+00	0.000E+00	0.000E+00	0.000E+00	0.000E+00	0.000E+00
TM172	0.000E+00	0.000E+00	0.000E+00	0.000E+00	0.000E+00	0.000E+00	0.000E+00	0.000E+00	0.000E+00	0.000E+00	0.000E+00	0.000E+00
YB172	0.000E+00	0.000E+00	0.000E+00	0.000E+00	0.000E+00	0.000E+00	0.000E+00	0.000E+00	0.000E+00	0.000E+00	0.000E+00	0.000E+00
TOTAL	8.598E-07	8.598E-07	8.598E-07	8.598E-07	8.598E-07	8.598E-07	8.598E-07	8.598E-07	8.598E-07	8.598E-07	8.598E-07	8.598E-07

```
1                                                                    OUTPUT UNIT = 11                                  PAGE   20
 ORIGEN2 V2.1 (8-1-91), Run on 03/10/04    at 13:15:17

     * Decay of containment activity on a per cc basis
+                                                                                FISSION PRODUCTS
     POWER= 1.00000E+00 MW,  BURNUP= 1.00000E+00 MWD,  FLUX= 1.00E+00 N/CM**2-SEC
0                    5 SUMMARY TABLE:  CONCENTRATIONS, GRAMS
```

	0 HR	1 HR	2 HR	4 HR	8 HR	12 HR	24 HR	48 HR	72 HR	96 HR	144 HR	288 HR
KR 85	1.300E-08	1.300E-08	1.300E-08	1.300E-08	1.300E-08	1.300E-08	1.300E-08	1.300E-08	1.299E-08	1.299E-08	1.299E-08	1.297E-08
I131	2.700E-09	2.690E-09	2.681E-09	2.661E-09	2.624E-09	2.586E-09	2.477E-09	2.272E-09	2.085E-09	1.913E-09	1.610E-09	9.596E-10
XE131	0.000E+00	9.638E-12	1.924E-11	3.835E-11	7.615E-11	1.134E-10	2.221E-10	4.261E-10	6.133E-10	7.853E-10	1.088E-09	1.741E-09
XE133	2.260E-09	2.260E-09	2.260E-09	2.257E-09	2.249E-09	2.236E-09	2.176E-09	1.998E-09	1.794E-09	1.593E-09	1.239E-09	5.658E-10
CS133	0.000E+00	1.244E-11	2.489E-11	4.976E-11	9.940E-11	1.488E-10	2.947E-10	5.710E-10	8.216E-10	1.045E-09	1.418E-09	2.100E-09
CS134	7.980E-08	7.980E-08	7.979E-08	7.979E-08	7.978E-08	7.976E-08	7.973E-08	7.965E-08	7.958E-08	7.951E-08	7.936E-08	7.892E-08
BA134	0.000E+00	3.060E-12	6.120E-12	1.224E-11	2.448E-11	3.671E-11	7.341E-11	1.468E-10	2.200E-10	2.932E-10	4.395E-10	8.765E-10
CS137	7.610E-07	7.610E-07	7.610E-07	7.610E-07	7.610E-07	7.610E-07	7.610E-07	7.609E-07	7.609E-07	7.608E-07	7.607E-07	7.604E-07
SUMTOT	8.588E-07	8.588E-07	8.588E-07	8.588E-07	8.588E-07	8.589E-07	8.589E-07	8.590E-07	8.590E-07	8.589E-07	8.589E-07	8.586E-07
0TOTAL	8.598E-07	8.598E-07	8.598E-07	8.598E-07	8.598E-07	8.598E-07	8.598E-07	8.598E-07	8.598E-07	8.598E-07	8.598E-07	8.598E-07

```
1                                                                    OUTPUT UNIT = 11                                  PAGE   21
 ORIGEN2 V2.1 (8-1-91), Run on 03/10/04    at 13:15:17

     * Decay of containment activity on a per cc basis
+                                                                                FISSION PRODUCTS
     POWER= 1.00000E+00 MW,  BURNUP= 1.00000E+00 MWD,  FLUX= 1.00E+00 N/CM**2-SEC
0                    5 SUMMARY TABLE:  CONCENTRATIONS, GRAMS
```

	0 HR	1 HR	2 HR	4 HR	8 HR	12 HR	24 HR	48 HR	72 HR	96 HR	144 HR	288 HR
KR	1.302E-08	1.302E-08	1.301E-08	1.301E-08	1.300E-08	1.300E-08	1.300E-08	1.300E-08	1.299E-08	1.299E-08	1.299E-08	1.297E-08
I	3.238E-09	3.187E-09	3.145E-09	3.076E-09	2.964E-09	2.872E-09	2.656E-09	2.349E-09	2.119E-09	1.928E-09	1.613E-09	9.596E-10
XE	2.364E-09	2.395E-09	2.420E-09	2.455E-09	2.496E-09	2.518E-09	2.539E-09	2.530E-09	2.501E-09	2.467E-09	2.410E-09	2.381E-09
CS	8.412E-07	8.412E-07	8.412E-07	8.412E-07	8.412E-07	8.413E-07	8.414E-07	8.416E-07	8.417E-07	8.418E-07	8.419E-07	8.418E-07
BA	0.000E+00	7.862E-12	1.486E-11	2.698E-11	5.035E-11	7.364E-11	1.434E-10	2.820E-10	4.198E-10	5.566E-10	8.276E-10	1.623E-09
SUMTOT	8.598E-07	8.598E-07	8.598E-07	8.598E-07	8.598E-07	8.598E-07	8.598E-07	8.598E-07	8.597E-07	8.597E-07	8.597E-07	8.597E-07
0TOTAL	8.598E-07	8.598E-07	8.598E-07	8.598E-07	8.598E-07	8.598E-07	8.598E-07	8.598E-07	8.598E-07	8.598E-07	8.598E-07	8.598E-07

```
0                                        CUMULATIVE TABLE TOTALS
```

AP+FP	8.598E-07	8.598E-07	8.598E-07	8.598E-07	8.598E-07	8.598E-07	8.598E-07	8.598E-07	8.598E-07	8.598E-07	8.598E-07	8.598E-07
ACT+FP	8.598E-07	8.598E-07	8.598E-07	8.598E-07	8.598E-07	8.598E-07	8.598E-07	8.598E-07	8.598E-07	8.598E-07	8.598E-07	8.598E-07

AP+ACT+FP 8.598E-07 8.598E-07 8.598E-07 8.598E-07 8.598E-07 8.598E-07 8.598E-07 8.598E-07 8.598E-07 8.598E-07 8.598E-07 8.598E-07

1 OUTPUT UNIT = 11 PAGE 22

ORIGEN2 V2.1 (8-1-91), Run on 03/10/04 at 13:15:17

* Decay of containment activity on a per cc basis

\+ FISSION PRODUCTS

POWER= 1.00000E+00 MW, BURNUP= 1.00000E+00 MWD, FLUX= 1.00E+00 N/CM**2-SEC

0 7 NUCLIDE TABLE: RADIOACTIVITY, CURIES

	0 HR	1 HR	2 HR	4 HR	8 HR	12 HR	24 HR	48 HR	72 HR	96 HR	144 HR	288 HR
H 3	0.000E+00	0.000E+00	0.000E+00	0.000E+00	0.000E+00	0.000E+00	0.000E+00	0.000E+00	0.000E+00	0.000E+00	0.000E+00	0.000E+00
LI 6	0.000E+00	0.000E+00	0.000E+00	0.000E+00	0.000E+00	0.000E+00	0.000E+00	0.000E+00	0.000E+00	0.000E+00	0.000E+00	0.000E+00
LI 7	0.000E+00	0.000E+00	0.000E+00	0.000E+00	0.000E+00	0.000E+00	0.000E+00	0.000E+00	0.000E+00	0.000E+00	0.000E+00	0.000E+00
BE 9	0.000E+00	0.000E+00	0.000E+00	0.000E+00	0.000E+00	0.000E+00	0.000E+00	0.000E+00	0.000E+00	0.000E+00	0.000E+00	0.000E+00
BE 10	0.000E+00	0.000E+00	0.000E+00	0.000E+00	0.000E+00	0.000E+00	0.000E+00	0.000E+00	0.000E+00	0.000E+00	0.000E+00	0.000E+00
C 14	0.000E+00	0.000E+00	0.000E+00	0.000E+00	0.000E+00	0.000E+00	0.000E+00	0.000E+00	0.000E+00	0.000E+00	0.000E+00	0.000E+00
NI 66	0.000E+00	0.000E+00	0.000E+00	0.000E+00	0.000E+00	0.000E+00	0.000E+00	0.000E+00	0.000E+00	0.000E+00	0.000E+00	0.000E+00
CU 66	0.000E+00	0.000E+00	0.000E+00	0.000E+00	0.000E+00	0.000E+00	0.000E+00	0.000E+00	0.000E+00	0.000E+00	0.000E+00	0.000E+00
ZN 66	0.000E+00	0.000E+00	0.000E+00	0.000E+00	0.000E+00	0.000E+00	0.000E+00	0.000E+00	0.000E+00	0.000E+00	0.000E+00	0.000E+00
CU 67	0.000E+00	0.000E+00	0.000E+00	0.000E+00	0.000E+00	0.000E+00	0.000E+00	0.000E+00	0.000E+00	0.000E+00	0.000E+00	0.000E+00
ZN 67	0.000E+00	0.000E+00	0.000E+00	0.000E+00	0.000E+00	0.000E+00	0.000E+00	0.000E+00	0.000E+00	0.000E+00	0.000E+00	0.000E+00
ZN 68	0.000E+00	0.000E+00	0.000E+00	0.000E+00	0.000E+00	0.000E+00	0.000E+00	0.000E+00	0.000E+00	0.000E+00	0.000E+00	0.000E+00
ZN 69	0.000E+00	0.000E+00	0.000E+00	0.000E+00	0.000E+00	0.000E+00	0.000E+00	0.000E+00	0.000E+00	0.000E+00	0.000E+00	0.000E+00
ZN 69M	0.000E+00	0.000E+00	0.000E+00	0.000E+00	0.000E+00	0.000E+00	0.000E+00	0.000E+00	0.000E+00	0.000E+00	0.000E+00	0.000E+00
GA 69	0.000E+00	0.000E+00	0.000E+00	0.000E+00	0.000E+00	0.000E+00	0.000E+00	0.000E+00	0.000E+00	0.000E+00	0.000E+00	0.000E+00
ZN 70	0.000E+00	0.000E+00	0.000E+00	0.000E+00	0.000E+00	0.000E+00	0.000E+00	0.000E+00	0.000E+00	0.000E+00	0.000E+00	0.000E+00
GA 70	0.000E+00	0.000E+00	0.000E+00	0.000E+00	0.000E+00	0.000E+00	0.000E+00	0.000E+00	0.000E+00	0.000E+00	0.000E+00	0.000E+00
GE 70	0.000E+00	0.000E+00	0.000E+00	0.000E+00	0.000E+00	0.000E+00	0.000E+00	0.000E+00	0.000E+00	0.000E+00	0.000E+00	0.000E+00
ZN 71	0.000E+00	0.000E+00	0.000E+00	0.000E+00	0.000E+00	0.000E+00	0.000E+00	0.000E+00	0.000E+00	0.000E+00	0.000E+00	0.000E+00
ZN 71M	0.000E+00	0.000E+00	0.000E+00	0.000E+00	0.000E+00	0.000E+00	0.000E+00	0.000E+00	0.000E+00	0.000E+00	0.000E+00	0.000E+00
GA 71	0.000E+00	0.000E+00	0.000E+00	0.000E+00	0.000E+00	0.000E+00	0.000E+00	0.000E+00	0.000E+00	0.000E+00	0.000E+00	0.000E+00
GE 71	0.000E+00	0.000E+00	0.000E+00	0.000E+00	0.000E+00	0.000E+00	0.000E+00	0.000E+00	0.000E+00	0.000E+00	0.000E+00	0.000E+00
GE 71M	0.000E+00	0.000E+00	0.000E+00	0.000E+00	0.000E+00	0.000E+00	0.000E+00	0.000E+00	0.000E+00	0.000E+00	0.000E+00	0.000E+00
CO 72	0.000E+00	0.000E+00	0.000E+00	0.000E+00	0.000E+00	0.000E+00	0.000E+00	0.000E+00	0.000E+00	0.000E+00	0.000E+00	0.000E+00
NI 72	0.000E+00	0.000E+00	0.000E+00	0.000E+00	0.000E+00	0.000E+00	0.000E+00	0.000E+00	0.000E+00	0.000E+00	0.000E+00	0.000E+00
CU 72	0.000E+00	0.000E+00	0.000E+00	0.000E+00	0.000E+00	0.000E+00	0.000E+00	0.000E+00	0.000E+00	0.000E+00	0.000E+00	0.000E+00
ZN 72	0.000E+00	0.000E+00	0.000E+00	0.000E+00	0.000E+00	0.000E+00	0.000E+00	0.000E+00	0.000E+00	0.000E+00	0.000E+00	0.000E+00
GA 72	0.000E+00	0.000E+00	0.000E+00	0.000E+00	0.000E+00	0.000E+00	0.000E+00	0.000E+00	0.000E+00	0.000E+00	0.000E+00	0.000E+00
GE 72	0.000E+00	0.000E+00	0.000E+00	0.000E+00	0.000E+00	0.000E+00	0.000E+00	0.000E+00	0.000E+00	0.000E+00	0.000E+00	0.000E+00
CO 73	0.000E+00	0.000E+00	0.000E+00	0.000E+00	0.000E+00	0.000E+00	0.000E+00	0.000E+00	0.000E+00	0.000E+00	0.000E+00	0.000E+00
NI 73	0.000E+00	0.000E+00	0.000E+00	0.000E+00	0.000E+00	0.000E+00	0.000E+00	0.000E+00	0.000E+00	0.000E+00	0.000E+00	0.000E+00
CU 73	0.000E+00	0.000E+00	0.000E+00	0.000E+00	0.000E+00	0.000E+00	0.000E+00	0.000E+00	0.000E+00	0.000E+00	0.000E+00	0.000E+00
ZN 73	0.000E+00	0.000E+00	0.000E+00	0.000E+00	0.000E+00	0.000E+00	0.000E+00	0.000E+00	0.000E+00	0.000E+00	0.000E+00	0.000E+00
GA 73	0.000E+00	0.000E+00	0.000E+00	0.000E+00	0.000E+00	0.000E+00	0.000E+00	0.000E+00	0.000E+00	0.000E+00	0.000E+00	0.000E+00
GE 73	0.000E+00	0.000E+00	0.000E+00	0.000E+00	0.000E+00	0.000E+00	0.000E+00	0.000E+00	0.000E+00	0.000E+00	0.000E+00	0.000E+00
GE 73M	0.000E+00	0.000E+00	0.000E+00	0.000E+00	0.000E+00	0.000E+00	0.000E+00	0.000E+00	0.000E+00	0.000E+00	0.000E+00	0.000E+00
CO 74	0.000E+00	0.000E+00	0.000E+00	0.000E+00	0.000E+00	0.000E+00	0.000E+00	0.000E+00	0.000E+00	0.000E+00	0.000E+00	0.000E+00
NI 74	0.000E+00	0.000E+00	0.000E+00	0.000E+00	0.000E+00	0.000E+00	0.000E+00	0.000E+00	0.000E+00	0.000E+00	0.000E+00	0.000E+00
CU 74	0.000E+00	0.000E+00	0.000E+00	0.000E+00	0.000E+00	0.000E+00	0.000E+00	0.000E+00	0.000E+00	0.000E+00	0.000E+00	0.000E+00
ZN 74	0.000E+00	0.000E+00	0.000E+00	0.000E+00	0.000E+00	0.000E+00	0.000E+00	0.000E+00	0.000E+00	0.000E+00	0.000E+00	0.000E+00
GA 74	0.000E+00	0.000E+00	0.000E+00	0.000E+00	0.000E+00	0.000E+00	0.000E+00	0.000E+00	0.000E+00	0.000E+00	0.000E+00	0.000E+00
GE 74	0.000E+00	0.000E+00	0.000E+00	0.000E+00	0.000E+00	0.000E+00	0.000E+00	0.000E+00	0.000E+00	0.000E+00	0.000E+00	0.000E+00
CO 75	0.000E+00	0.000E+00	0.000E+00	0.000E+00	0.000E+00	0.000E+00	0.000E+00	0.000E+00	0.000E+00	0.000E+00	0.000E+00	0.000E+00
NI 75	0.000E+00	0.000E+00	0.000E+00	0.000E+00	0.000E+00	0.000E+00	0.000E+00	0.000E+00	0.000E+00	0.000E+00	0.000E+00	0.000E+00
CU 75	0.000E+00	0.000E+00	0.000E+00	0.000E+00	0.000E+00	0.000E+00	0.000E+00	0.000E+00	0.000E+00	0.000E+00	0.000E+00	0.000E+00
ZN 75	0.000E+00	0.000E+00	0.000E+00	0.000E+00	0.000E+00	0.000E+00	0.000E+00	0.000E+00	0.000E+00	0.000E+00	0.000E+00	0.000E+00
GA 75	0.000E+00	0.000E+00	0.000E+00	0.000E+00	0.000E+00	0.000E+00	0.000E+00	0.000E+00	0.000E+00	0.000E+00	0.000E+00	0.000E+00
GE 75	0.000E+00	0.000E+00	0.000E+00	0.000E+00	0.000E+00	0.000E+00	0.000E+00	0.000E+00	0.000E+00	0.000E+00	0.000E+00	0.000E+00

GE 75M	0.000E+00	0.000E+00	0.000E+00	0.000E+00	0.000E+00	0.000E+00	0.000E+00	0.000E+00	0.000E+00	0.000E+00	0.000E+00	0.000E+00
AS 75	0.000E+00	0.000E+00	0.000E+00	0.000E+00	0.000E+00	0.000E+00	0.000E+00	0.000E+00	0.000E+00	0.000E+00	0.000E+00	0.000E+00
NI 76	0.000E+00	0.000E+00	0.000E+00	0.000E+00	0.000E+00	0.000E+00	0.000E+00	0.000E+00	0.000E+00	0.000E+00	0.000E+00	0.000E+00

1 OUTPUT UNIT = 11 PAGE 23

ORIGEN2 V2.1 (8-1-91), Run on 03/10/04 at 13:15:17

* Decay of containment activity on a per cc basis

+ FISSION PRODUCTS

POWER= 1.00000E+00 MW, BURNUP= 1.00000E+00 MWD, FLUX= 1.00E+00 N/CM**2-SEC

0 7 NUCLIDE TABLE: RADIOACTIVITY, CURIES

	0 HR	1 HR	2 HR	4 HR	8 HR	12 HR	24 HR	48 HR	72 HR	96 HR	144 HR	288 HR
CU 76	0.000E+00	0.000E+00	0.000E+00	0.000E+00	0.000E+00	0.000E+00	0.000E+00	0.000E+00	0.000E+00	0.000E+00	0.000E+00	0.000E+00
ZN 76	0.000E+00	0.000E+00	0.000E+00	0.000E+00	0.000E+00	0.000E+00	0.000E+00	0.000E+00	0.000E+00	0.000E+00	0.000E+00	0.000E+00
GA 76	0.000E+00	0.000E+00	0.000E+00	0.000E+00	0.000E+00	0.000E+00	0.000E+00	0.000E+00	0.000E+00	0.000E+00	0.000E+00	0.000E+00
GE 76	0.000E+00	0.000E+00	0.000E+00	0.000E+00	0.000E+00	0.000E+00	0.000E+00	0.000E+00	0.000E+00	0.000E+00	0.000E+00	0.000E+00
AS 76	0.000E+00	0.000E+00	0.000E+00	0.000E+00	0.000E+00	0.000E+00	0.000E+00	0.000E+00	0.000E+00	0.000E+00	0.000E+00	0.000E+00
SE 76	0.000E+00	0.000E+00	0.000E+00	0.000E+00	0.000E+00	0.000E+00	0.000E+00	0.000E+00	0.000E+00	0.000E+00	0.000E+00	0.000E+00
NI 77	0.000E+00	0.000E+00	0.000E+00	0.000E+00	0.000E+00	0.000E+00	0.000E+00	0.000E+00	0.000E+00	0.000E+00	0.000E+00	0.000E+00
CU 77	0.000E+00	0.000E+00	0.000E+00	0.000E+00	0.000E+00	0.000E+00	0.000E+00	0.000E+00	0.000E+00	0.000E+00	0.000E+00	0.000E+00
ZN 77	0.000E+00	0.000E+00	0.000E+00	0.000E+00	0.000E+00	0.000E+00	0.000E+00	0.000E+00	0.000E+00	0.000E+00	0.000E+00	0.000E+00
GA 77	0.000E+00	0.000E+00	0.000E+00	0.000E+00	0.000E+00	0.000E+00	0.000E+00	0.000E+00	0.000E+00	0.000E+00	0.000E+00	0.000E+00
GE 77	0.000E+00	0.000E+00	0.000E+00	0.000E+00	0.000E+00	0.000E+00	0.000E+00	0.000E+00	0.000E+00	0.000E+00	0.000E+00	0.000E+00
GE 77M	0.000E+00	0.000E+00	0.000E+00	0.000E+00	0.000E+00	0.000E+00	0.000E+00	0.000E+00	0.000E+00	0.000E+00	0.000E+00	0.000E+00
AS 77	0.000E+00	0.000E+00	0.000E+00	0.000E+00	0.000E+00	0.000E+00	0.000E+00	0.000E+00	0.000E+00	0.000E+00	0.000E+00	0.000E+00
SE 77	0.000E+00	0.000E+00	0.000E+00	0.000E+00	0.000E+00	0.000E+00	0.000E+00	0.000E+00	0.000E+00	0.000E+00	0.000E+00	0.000E+00
SE 77M	0.000E+00	0.000E+00	0.000E+00	0.000E+00	0.000E+00	0.000E+00	0.000E+00	0.000E+00	0.000E+00	0.000E+00	0.000E+00	0.000E+00
NI 78	0.000E+00	0.000E+00	0.000E+00	0.000E+00	0.000E+00	0.000E+00	0.000E+00	0.000E+00	0.000E+00	0.000E+00	0.000E+00	0.000E+00
CU 78	0.000E+00	0.000E+00	0.000E+00	0.000E+00	0.000E+00	0.000E+00	0.000E+00	0.000E+00	0.000E+00	0.000E+00	0.000E+00	0.000E+00
ZN 78	0.000E+00	0.000E+00	0.000E+00	0.000E+00	0.000E+00	0.000E+00	0.000E+00	0.000E+00	0.000E+00	0.000E+00	0.000E+00	0.000E+00
GA 78	0.000E+00	0.000E+00	0.000E+00	0.000E+00	0.000E+00	0.000E+00	0.000E+00	0.000E+00	0.000E+00	0.000E+00	0.000E+00	0.000E+00
GE 78	0.000E+00	0.000E+00	0.000E+00	0.000E+00	0.000E+00	0.000E+00	0.000E+00	0.000E+00	0.000E+00	0.000E+00	0.000E+00	0.000E+00
AS 78	0.000E+00	0.000E+00	0.000E+00	0.000E+00	0.000E+00	0.000E+00	0.000E+00	0.000E+00	0.000E+00	0.000E+00	0.000E+00	0.000E+00
SE 78	0.000E+00	0.000E+00	0.000E+00	0.000E+00	0.000E+00	0.000E+00	0.000E+00	0.000E+00	0.000E+00	0.000E+00	0.000E+00	0.000E+00
CU 79	0.000E+00	0.000E+00	0.000E+00	0.000E+00	0.000E+00	0.000E+00	0.000E+00	0.000E+00	0.000E+00	0.000E+00	0.000E+00	0.000E+00
ZN 79	0.000E+00	0.000E+00	0.000E+00	0.000E+00	0.000E+00	0.000E+00	0.000E+00	0.000E+00	0.000E+00	0.000E+00	0.000E+00	0.000E+00
GA 79	0.000E+00	0.000E+00	0.000E+00	0.000E+00	0.000E+00	0.000E+00	0.000E+00	0.000E+00	0.000E+00	0.000E+00	0.000E+00	0.000E+00
GE 79	0.000E+00	0.000E+00	0.000E+00	0.000E+00	0.000E+00	0.000E+00	0.000E+00	0.000E+00	0.000E+00	0.000E+00	0.000E+00	0.000E+00
AS 79	0.000E+00	0.000E+00	0.000E+00	0.000E+00	0.000E+00	0.000E+00	0.000E+00	0.000E+00	0.000E+00	0.000E+00	0.000E+00	0.000E+00
SE 79	0.000E+00	0.000E+00	0.000E+00	0.000E+00	0.000E+00	0.000E+00	0.000E+00	0.000E+00	0.000E+00	0.000E+00	0.000E+00	0.000E+00
SE 79M	0.000E+00	0.000E+00	0.000E+00	0.000E+00	0.000E+00	0.000E+00	0.000E+00	0.000E+00	0.000E+00	0.000E+00	0.000E+00	0.000E+00
BR 79	0.000E+00	0.000E+00	0.000E+00	0.000E+00	0.000E+00	0.000E+00	0.000E+00	0.000E+00	0.000E+00	0.000E+00	0.000E+00	0.000E+00
BR 79M	0.000E+00	0.000E+00	0.000E+00	0.000E+00	0.000E+00	0.000E+00	0.000E+00	0.000E+00	0.000E+00	0.000E+00	0.000E+00	0.000E+00
KR 79	0.000E+00	0.000E+00	0.000E+00	0.000E+00	0.000E+00	0.000E+00	0.000E+00	0.000E+00	0.000E+00	0.000E+00	0.000E+00	0.000E+00
CU 80	0.000E+00	0.000E+00	0.000E+00	0.000E+00	0.000E+00	0.000E+00	0.000E+00	0.000E+00	0.000E+00	0.000E+00	0.000E+00	0.000E+00
ZN 80	0.000E+00	0.000E+00	0.000E+00	0.000E+00	0.000E+00	0.000E+00	0.000E+00	0.000E+00	0.000E+00	0.000E+00	0.000E+00	0.000E+00
GA 80	0.000E+00	0.000E+00	0.000E+00	0.000E+00	0.000E+00	0.000E+00	0.000E+00	0.000E+00	0.000E+00	0.000E+00	0.000E+00	0.000E+00
GE 80	0.000E+00	0.000E+00	0.000E+00	0.000E+00	0.000E+00	0.000E+00	0.000E+00	0.000E+00	0.000E+00	0.000E+00	0.000E+00	0.000E+00
AS 80	0.000E+00	0.000E+00	0.000E+00	0.000E+00	0.000E+00	0.000E+00	0.000E+00	0.000E+00	0.000E+00	0.000E+00	0.000E+00	0.000E+00
SE 80	0.000E+00	0.000E+00	0.000E+00	0.000E+00	0.000E+00	0.000E+00	0.000E+00	0.000E+00	0.000E+00	0.000E+00	0.000E+00	0.000E+00
BR 80	0.000E+00	0.000E+00	0.000E+00	0.000E+00	0.000E+00	0.000E+00	0.000E+00	0.000E+00	0.000E+00	0.000E+00	0.000E+00	0.000E+00
BR 80M	0.000E+00	0.000E+00	0.000E+00	0.000E+00	0.000E+00	0.000E+00	0.000E+00	0.000E+00	0.000E+00	0.000E+00	0.000E+00	0.000E+00
KR 80	0.000E+00	0.000E+00	0.000E+00	0.000E+00	0.000E+00	0.000E+00	0.000E+00	0.000E+00	0.000E+00	0.000E+00	0.000E+00	0.000E+00
CU 81	0.000E+00	0.000E+00	0.000E+00	0.000E+00	0.000E+00	0.000E+00	0.000E+00	0.000E+00	0.000E+00	0.000E+00	0.000E+00	0.000E+00
ZN 81	0.000E+00	0.000E+00	0.000E+00	0.000E+00	0.000E+00	0.000E+00	0.000E+00	0.000E+00	0.000E+00	0.000E+00	0.000E+00	0.000E+00
GA 81	0.000E+00	0.000E+00	0.000E+00	0.000E+00	0.000E+00	0.000E+00	0.000E+00	0.000E+00	0.000E+00	0.000E+00	0.000E+00	0.000E+00
GE 81	0.000E+00	0.000E+00	0.000E+00	0.000E+00	0.000E+00	0.000E+00	0.000E+00	0.000E+00	0.000E+00	0.000E+00	0.000E+00	0.000E+00
AS 81	0.000E+00	0.000E+00	0.000E+00	0.000E+00	0.000E+00	0.000E+00	0.000E+00	0.000E+00	0.000E+00	0.000E+00	0.000E+00	0.000E+00

SE 81	0.000E+00	0.000E+00	0.000E+00	0.000E+00	0.000E+00	0.000E+00	0.000E+00	0.000E+00	0.000E+00	0.000E+00	0.000E+00	0.000E+00
SE 81M	0.000E+00	0.000E+00	0.000E+00	0.000E+00	0.000E+00	0.000E+00	0.000E+00	0.000E+00	0.000E+00	0.000E+00	0.000E+00	0.000E+00
BR 81	0.000E+00	0.000E+00	0.000E+00	0.000E+00	0.000E+00	0.000E+00	0.000E+00	0.000E+00	0.000E+00	0.000E+00	0.000E+00	0.000E+00
KR 81	0.000E+00	0.000E+00	0.000E+00	0.000E+00	0.000E+00	0.000E+00	0.000E+00	0.000E+00	0.000E+00	0.000E+00	0.000E+00	0.000E+00
KR 81M	0.000E+00	0.000E+00	0.000E+00	0.000E+00	0.000E+00	0.000E+00	0.000E+00	0.000E+00	0.000E+00	0.000E+00	0.000E+00	0.000E+00

1 OUTPUT UNIT = 11 PAGE 24

ORIGEN2 V2.1 (8-1-91), Run on 03/10/04 at 13:15:17

* Decay of containment activity on a per cc basis

+ FISSION PRODUCTS

POWER= 1.00000E+00 MW, BURNUP= 1.00000E+00 MWD, FLUX= 1.00E+00 N/CM**2-SEC

0 7 NUCLIDE TABLE: RADIOACTIVITY, CURIES

	0 HR	1 HR	2 HR	4 HR	8 HR	12 HR	24 HR	48 HR	72 HR	96 HR	144 HR	288 HR
ZN 82	0.000E+00	0.000E+00	0.000E+00	0.000E+00	0.000E+00	0.000E+00	0.000E+00	0.000E+00	0.000E+00	0.000E+00	0.000E+00	0.000E+00
GA 82	0.000E+00	0.000E+00	0.000E+00	0.000E+00	0.000E+00	0.000E+00	0.000E+00	0.000E+00	0.000E+00	0.000E+00	0.000E+00	0.000E+00
GE 82	0.000E+00	0.000E+00	0.000E+00	0.000E+00	0.000E+00	0.000E+00	0.000E+00	0.000E+00	0.000E+00	0.000E+00	0.000E+00	0.000E+00
AS 82	0.000E+00	0.000E+00	0.000E+00	0.000E+00	0.000E+00	0.000E+00	0.000E+00	0.000E+00	0.000E+00	0.000E+00	0.000E+00	0.000E+00
AS 82M	0.000E+00	0.000E+00	0.000E+00	0.000E+00	0.000E+00	0.000E+00	0.000E+00	0.000E+00	0.000E+00	0.000E+00	0.000E+00	0.000E+00
SE 82	0.000E+00	0.000E+00	0.000E+00	0.000E+00	0.000E+00	0.000E+00	0.000E+00	0.000E+00	0.000E+00	0.000E+00	0.000E+00	0.000E+00
BR 82	0.000E+00	0.000E+00	0.000E+00	0.000E+00	0.000E+00	0.000E+00	0.000E+00	0.000E+00	0.000E+00	0.000E+00	0.000E+00	0.000E+00
BR 82M	0.000E+00	0.000E+00	0.000E+00	0.000E+00	0.000E+00	0.000E+00	0.000E+00	0.000E+00	0.000E+00	0.000E+00	0.000E+00	0.000E+00
KR 82	0.000E+00	0.000E+00	0.000E+00	0.000E+00	0.000E+00	0.000E+00	0.000E+00	0.000E+00	0.000E+00	0.000E+00	0.000E+00	0.000E+00
ZN 83	0.000E+00	0.000E+00	0.000E+00	0.000E+00	0.000E+00	0.000E+00	0.000E+00	0.000E+00	0.000E+00	0.000E+00	0.000E+00	0.000E+00
GA 83	0.000E+00	0.000E+00	0.000E+00	0.000E+00	0.000E+00	0.000E+00	0.000E+00	0.000E+00	0.000E+00	0.000E+00	0.000E+00	0.000E+00
GE 83	0.000E+00	0.000E+00	0.000E+00	0.000E+00	0.000E+00	0.000E+00	0.000E+00	0.000E+00	0.000E+00	0.000E+00	0.000E+00	0.000E+00
AS 83	0.000E+00	0.000E+00	0.000E+00	0.000E+00	0.000E+00	0.000E+00	0.000E+00	0.000E+00	0.000E+00	0.000E+00	0.000E+00	0.000E+00
SE 83	0.000E+00	0.000E+00	0.000E+00	0.000E+00	0.000E+00	0.000E+00	0.000E+00	0.000E+00	0.000E+00	0.000E+00	0.000E+00	0.000E+00
SE 83M	0.000E+00	0.000E+00	0.000E+00	0.000E+00	0.000E+00	0.000E+00	0.000E+00	0.000E+00	0.000E+00	0.000E+00	0.000E+00	0.000E+00
BR 83	0.000E+00	0.000E+00	0.000E+00	0.000E+00	0.000E+00	0.000E+00	0.000E+00	0.000E+00	0.000E+00	0.000E+00	0.000E+00	0.000E+00
KR 83	0.000E+00	0.000E+00	0.000E+00	0.000E+00	0.000E+00	0.000E+00	0.000E+00	0.000E+00	0.000E+00	0.000E+00	0.000E+00	0.000E+00
KR 83M	0.000E+00	0.000E+00	0.000E+00	0.000E+00	0.000E+00	0.000E+00	0.000E+00	0.000E+00	0.000E+00	0.000E+00	0.000E+00	0.000E+00
GA 84	0.000E+00	0.000E+00	0.000E+00	0.000E+00	0.000E+00	0.000E+00	0.000E+00	0.000E+00	0.000E+00	0.000E+00	0.000E+00	0.000E+00
GE 84	0.000E+00	0.000E+00	0.000E+00	0.000E+00	0.000E+00	0.000E+00	0.000E+00	0.000E+00	0.000E+00	0.000E+00	0.000E+00	0.000E+00
AS 84	0.000E+00	0.000E+00	0.000E+00	0.000E+00	0.000E+00	0.000E+00	0.000E+00	0.000E+00	0.000E+00	0.000E+00	0.000E+00	0.000E+00
SE 84	0.000E+00	0.000E+00	0.000E+00	0.000E+00	0.000E+00	0.000E+00	0.000E+00	0.000E+00	0.000E+00	0.000E+00	0.000E+00	0.000E+00
BR 84	0.000E+00	0.000E+00	0.000E+00	0.000E+00	0.000E+00	0.000E+00	0.000E+00	0.000E+00	0.000E+00	0.000E+00	0.000E+00	0.000E+00
BR 84M	0.000E+00	0.000E+00	0.000E+00	0.000E+00	0.000E+00	0.000E+00	0.000E+00	0.000E+00	0.000E+00	0.000E+00	0.000E+00	0.000E+00
KR 84	0.000E+00	0.000E+00	0.000E+00	0.000E+00	0.000E+00	0.000E+00	0.000E+00	0.000E+00	0.000E+00	0.000E+00	0.000E+00	0.000E+00
GA 85	0.000E+00	0.000E+00	0.000E+00	0.000E+00	0.000E+00	0.000E+00	0.000E+00	0.000E+00	0.000E+00	0.000E+00	0.000E+00	0.000E+00
GE 85	0.000E+00	0.000E+00	0.000E+00	0.000E+00	0.000E+00	0.000E+00	0.000E+00	0.000E+00	0.000E+00	0.000E+00	0.000E+00	0.000E+00
AS 85	0.000E+00	0.000E+00	0.000E+00	0.000E+00	0.000E+00	0.000E+00	0.000E+00	0.000E+00	0.000E+00	0.000E+00	0.000E+00	0.000E+00
SE 85	0.000E+00	0.000E+00	0.000E+00	0.000E+00	0.000E+00	0.000E+00	0.000E+00	0.000E+00	0.000E+00	0.000E+00	0.000E+00	0.000E+00
SE 85M	0.000E+00	0.000E+00	0.000E+00	0.000E+00	0.000E+00	0.000E+00	0.000E+00	0.000E+00	0.000E+00	0.000E+00	0.000E+00	0.000E+00
BR 85	0.000E+00	0.000E+00	0.000E+00	0.000E+00	0.000E+00	0.000E+00	0.000E+00	0.000E+00	0.000E+00	0.000E+00	0.000E+00	0.000E+00
KR 85	5.102E-06	5.103E-06	5.103E-06	5.103E-06	5.103E-06	5.103E-06	5.102E-06	5.101E-06	5.100E-06	5.099E-06	5.098E-06	5.092E-06
KR 85M	5.590E-05	4.788E-05	4.102E-05	3.010E-05	1.621E-05	8.733E-06	1.364E-06	3.330E-08	8.128E-10	1.984E-11	1.182E-14	2.499E-24
RB 85	0.000E+00	0.000E+00	0.000E+00	0.000E+00	0.000E+00	0.000E+00	0.000E+00	0.000E+00	0.000E+00	0.000E+00	0.000E+00	0.000E+00
GE 86	0.000E+00	0.000E+00	0.000E+00	0.000E+00	0.000E+00	0.000E+00	0.000E+00	0.000E+00	0.000E+00	0.000E+00	0.000E+00	0.000E+00
AS 86	0.000E+00	0.000E+00	0.000E+00	0.000E+00	0.000E+00	0.000E+00	0.000E+00	0.000E+00	0.000E+00	0.000E+00	0.000E+00	0.000E+00
SE 86	0.000E+00	0.000E+00	0.000E+00	0.000E+00	0.000E+00	0.000E+00	0.000E+00	0.000E+00	0.000E+00	0.000E+00	0.000E+00	0.000E+00
BR 86	0.000E+00	0.000E+00	0.000E+00	0.000E+00	0.000E+00	0.000E+00	0.000E+00	0.000E+00	0.000E+00	0.000E+00	0.000E+00	0.000E+00
BR 86M	0.000E+00	0.000E+00	0.000E+00	0.000E+00	0.000E+00	0.000E+00	0.000E+00	0.000E+00	0.000E+00	0.000E+00	0.000E+00	0.000E+00
KR 86	0.000E+00	0.000E+00	0.000E+00	0.000E+00	0.000E+00	0.000E+00	0.000E+00	0.000E+00	0.000E+00	0.000E+00	0.000E+00	0.000E+00
RB 86	1.050E-06	1.049E-06	1.047E-06	1.044E-06	1.037E-06	1.031E-06	1.012E-06	9.750E-07	9.395E-07	9.052E-07	8.404E-07	6.725E-07
RB 86M	0.000E+00	0.000E+00	0.000E+00	0.000E+00	0.000E+00	0.000E+00	0.000E+00	0.000E+00	0.000E+00	0.000E+00	0.000E+00	0.000E+00
SR 86	0.000E+00	0.000E+00	0.000E+00	0.000E+00	0.000E+00	0.000E+00	0.000E+00	0.000E+00	0.000E+00	0.000E+00	0.000E+00	0.000E+00
GE 87	0.000E+00	0.000E+00	0.000E+00	0.000E+00	0.000E+00	0.000E+00	0.000E+00	0.000E+00	0.000E+00	0.000E+00	0.000E+00	0.000E+00

AS 87	0.000E+00	0.000E+00	0.000E+00	0.000E+00	0.000E+00	0.000E+00	0.000E+00	0.000E+00	0.000E+00	0.000E+00	0.000E+00	0.000E+00
SE 87	0.000E+00	0.000E+00	0.000E+00	0.000E+00	0.000E+00	0.000E+00	0.000E+00	0.000E+00	0.000E+00	0.000E+00	0.000E+00	0.000E+00
BR 87	0.000E+00	0.000E+00	0.000E+00	0.000E+00	0.000E+00	0.000E+00	0.000E+00	0.000E+00	0.000E+00	0.000E+00	0.000E+00	0.000E+00
KR 87	1.080E-04	6.260E-05	3.630E-05	1.220E-05	1.379E-06	1.558E-07	2.242E-10	4.671E-16	9.729E-22	2.027E-27	0.000E+00	0.000E+00
RB 87	0.000E+00	1.401E-19	2.214E-19	2.958E-19	3.293E-19	3.330E-19	3.335E-19	3.335E-19	3.335E-19	3.335E-19	3.335E-19	3.335E-19
SR 87	0.000E+00	0.000E+00	0.000E+00	0.000E+00	0.000E+00	0.000E+00	0.000E+00	0.000E+00	0.000E+00	0.000E+00	0.000E+00	0.000E+00
SR 87M	0.000E+00	0.000E+00	0.000E+00	0.000E+00	0.000E+00	0.000E+00	0.000E+00	0.000E+00	0.000E+00	0.000E+00	0.000E+00	0.000E+00

1 OUTPUT UNIT = 11 PAGE 25

ORIGEN2 V2.1 (8-1-91), Run on 03/10/04 at 13:15:17

* Decay of containment activity on a per cc basis

+ FISSION PRODUCTS

POWER= 1.00000E+00 MW, BURNUP= 1.00000E+00 MWD, FLUX= 1.00E+00 N/CM**2-SEC

0 7 NUCLIDE TABLE: RADIOACTIVITY, CURIES

	0 HR	1 HR	2 HR	4 HR	8 HR	12 HR	24 HR	48 HR	72 HR	96 HR	144 HR	288 HR
GE 88	0.000E+00	0.000E+00	0.000E+00	0.000E+00	0.000E+00	0.000E+00	0.000E+00	0.000E+00	0.000E+00	0.000E+00	0.000E+00	0.000E+00
AS 88	0.000E+00	0.000E+00	0.000E+00	0.000E+00	0.000E+00	0.000E+00	0.000E+00	0.000E+00	0.000E+00	0.000E+00	0.000E+00	0.000E+00
SE 88	0.000E+00	0.000E+00	0.000E+00	0.000E+00	0.000E+00	0.000E+00	0.000E+00	0.000E+00	0.000E+00	0.000E+00	0.000E+00	0.000E+00
BR 88	0.000E+00	0.000E+00	0.000E+00	0.000E+00	0.000E+00	0.000E+00	0.000E+00	0.000E+00	0.000E+00	0.000E+00	0.000E+00	0.000E+00
KR 88	1.518E-04	1.190E-04	9.318E-05	5.718E-05	2.153E-05	8.109E-06	4.330E-07	1.234E-09	3.516E-12	1.009E-14	8.202E-20	4.333E-35
RB 88	0.000E+00	1.164E-04	1.025E-04	6.384E-05	2.405E-05	9.057E-06	4.835E-07	1.379E-09	3.930E-12	1.126E-14	9.159E-20	4.443E-35
SR 88	0.000E+00	0.000E+00	0.000E+00	0.000E+00	0.000E+00	0.000E+00	0.000E+00	0.000E+00	0.000E+00	0.000E+00	0.000E+00	0.000E+00
AS 89	0.000E+00	0.000E+00	0.000E+00	0.000E+00	0.000E+00	0.000E+00	0.000E+00	0.000E+00	0.000E+00	0.000E+00	0.000E+00	0.000E+00
SE 89	0.000E+00	0.000E+00	0.000E+00	0.000E+00	0.000E+00	0.000E+00	0.000E+00	0.000E+00	0.000E+00	0.000E+00	0.000E+00	0.000E+00
BR 89	0.000E+00	0.000E+00	0.000E+00	0.000E+00	0.000E+00	0.000E+00	0.000E+00	0.000E+00	0.000E+00	0.000E+00	0.000E+00	0.000E+00
KR 89	0.000E+00	0.000E+00	0.000E+00	0.000E+00	0.000E+00	0.000E+00	0.000E+00	0.000E+00	0.000E+00	0.000E+00	0.000E+00	0.000E+00
RB 89	0.000E+00	0.000E+00	0.000E+00	0.000E+00	0.000E+00	0.000E+00	0.000E+00	0.000E+00	0.000E+00	0.000E+00	0.000E+00	0.000E+00
SR 89	0.000E+00	0.000E+00	0.000E+00	0.000E+00	0.000E+00	0.000E+00	0.000E+00	0.000E+00	0.000E+00	0.000E+00	0.000E+00	0.000E+00
Y 89	0.000E+00	0.000E+00	0.000E+00	0.000E+00	0.000E+00	0.000E+00	0.000E+00	0.000E+00	0.000E+00	0.000E+00	0.000E+00	0.000E+00
Y 89M	0.000E+00	0.000E+00	0.000E+00	0.000E+00	0.000E+00	0.000E+00	0.000E+00	0.000E+00	0.000E+00	0.000E+00	0.000E+00	0.000E+00
AS 90	0.000E+00	0.000E+00	0.000E+00	0.000E+00	0.000E+00	0.000E+00	0.000E+00	0.000E+00	0.000E+00	0.000E+00	0.000E+00	0.000E+00
SE 90	0.000E+00	0.000E+00	0.000E+00	0.000E+00	0.000E+00	0.000E+00	0.000E+00	0.000E+00	0.000E+00	0.000E+00	0.000E+00	0.000E+00
BR 90	0.000E+00	0.000E+00	0.000E+00	0.000E+00	0.000E+00	0.000E+00	0.000E+00	0.000E+00	0.000E+00	0.000E+00	0.000E+00	0.000E+00
KR 90	0.000E+00	0.000E+00	0.000E+00	0.000E+00	0.000E+00	0.000E+00	0.000E+00	0.000E+00	0.000E+00	0.000E+00	0.000E+00	0.000E+00
RB 90	0.000E+00	0.000E+00	0.000E+00	0.000E+00	0.000E+00	0.000E+00	0.000E+00	0.000E+00	0.000E+00	0.000E+00	0.000E+00	0.000E+00
RB 90M	0.000E+00	0.000E+00	0.000E+00	0.000E+00	0.000E+00	0.000E+00	0.000E+00	0.000E+00	0.000E+00	0.000E+00	0.000E+00	0.000E+00
SR 90	0.000E+00	0.000E+00	0.000E+00	0.000E+00	0.000E+00	0.000E+00	0.000E+00	0.000E+00	0.000E+00	0.000E+00	0.000E+00	0.000E+00
Y 90	0.000E+00	0.000E+00	0.000E+00	0.000E+00	0.000E+00	0.000E+00	0.000E+00	0.000E+00	0.000E+00	0.000E+00	0.000E+00	0.000E+00
Y 90M	0.000E+00	0.000E+00	0.000E+00	0.000E+00	0.000E+00	0.000E+00	0.000E+00	0.000E+00	0.000E+00	0.000E+00	0.000E+00	0.000E+00
ZR 90	0.000E+00	0.000E+00	0.000E+00	0.000E+00	0.000E+00	0.000E+00	0.000E+00	0.000E+00	0.000E+00	0.000E+00	0.000E+00	0.000E+00
ZR 90M	0.000E+00	0.000E+00	0.000E+00	0.000E+00	0.000E+00	0.000E+00	0.000E+00	0.000E+00	0.000E+00	0.000E+00	0.000E+00	0.000E+00
SE 91	0.000E+00	0.000E+00	0.000E+00	0.000E+00	0.000E+00	0.000E+00	0.000E+00	0.000E+00	0.000E+00	0.000E+00	0.000E+00	0.000E+00
BR 91	0.000E+00	0.000E+00	0.000E+00	0.000E+00	0.000E+00	0.000E+00	0.000E+00	0.000E+00	0.000E+00	0.000E+00	0.000E+00	0.000E+00
KR 91	0.000E+00	0.000E+00	0.000E+00	0.000E+00	0.000E+00	0.000E+00	0.000E+00	0.000E+00	0.000E+00	0.000E+00	0.000E+00	0.000E+00
RB 91	0.000E+00	0.000E+00	0.000E+00	0.000E+00	0.000E+00	0.000E+00	0.000E+00	0.000E+00	0.000E+00	0.000E+00	0.000E+00	0.000E+00
SR 91	0.000E+00	0.000E+00	0.000E+00	0.000E+00	0.000E+00	0.000E+00	0.000E+00	0.000E+00	0.000E+00	0.000E+00	0.000E+00	0.000E+00
Y 91	0.000E+00	0.000E+00	0.000E+00	0.000E+00	0.000E+00	0.000E+00	0.000E+00	0.000E+00	0.000E+00	0.000E+00	0.000E+00	0.000E+00
Y 91M	0.000E+00	0.000E+00	0.000E+00	0.000E+00	0.000E+00	0.000E+00	0.000E+00	0.000E+00	0.000E+00	0.000E+00	0.000E+00	0.000E+00
ZR 91	0.000E+00	0.000E+00	0.000E+00	0.000E+00	0.000E+00	0.000E+00	0.000E+00	0.000E+00	0.000E+00	0.000E+00	0.000E+00	0.000E+00
NB 91	0.000E+00	0.000E+00	0.000E+00	0.000E+00	0.000E+00	0.000E+00	0.000E+00	0.000E+00	0.000E+00	0.000E+00	0.000E+00	0.000E+00
SE 92	0.000E+00	0.000E+00	0.000E+00	0.000E+00	0.000E+00	0.000E+00	0.000E+00	0.000E+00	0.000E+00	0.000E+00	0.000E+00	0.000E+00
BR 92	0.000E+00	0.000E+00	0.000E+00	0.000E+00	0.000E+00	0.000E+00	0.000E+00	0.000E+00	0.000E+00	0.000E+00	0.000E+00	0.000E+00
KR 92	0.000E+00	0.000E+00	0.000E+00	0.000E+00	0.000E+00	0.000E+00	0.000E+00	0.000E+00	0.000E+00	0.000E+00	0.000E+00	0.000E+00
RB 92	0.000E+00	0.000E+00	0.000E+00	0.000E+00	0.000E+00	0.000E+00	0.000E+00	0.000E+00	0.000E+00	0.000E+00	0.000E+00	0.000E+00
SR 92	0.000E+00	0.000E+00	0.000E+00	0.000E+00	0.000E+00	0.000E+00	0.000E+00	0.000E+00	0.000E+00	0.000E+00	0.000E+00	0.000E+00
Y 92	0.000E+00	0.000E+00	0.000E+00	0.000E+00	0.000E+00	0.000E+00	0.000E+00	0.000E+00	0.000E+00	0.000E+00	0.000E+00	0.000E+00
ZR 92	0.000E+00	0.000E+00	0.000E+00	0.000E+00	0.000E+00	0.000E+00	0.000E+00	0.000E+00	0.000E+00	0.000E+00	0.000E+00	0.000E+00

NB 92	0.000E+00	0.000E+00	0.000E+00	0.000E+00	0.000E+00	0.000E+00	0.000E+00	0.000E+00	0.000E+00	0.000E+00	0.000E+00	0.000E+00
SE 93	0.000E+00	0.000E+00	0.000E+00	0.000E+00	0.000E+00	0.000E+00	0.000E+00	0.000E+00	0.000E+00	0.000E+00	0.000E+00	0.000E+00
BR 93	0.000E+00	0.000E+00	0.000E+00	0.000E+00	0.000E+00	0.000E+00	0.000E+00	0.000E+00	0.000E+00	0.000E+00	0.000E+00	0.000E+00
KR 93	0.000E+00	0.000E+00	0.000E+00	0.000E+00	0.000E+00	0.000E+00	0.000E+00	0.000E+00	0.000E+00	0.000E+00	0.000E+00	0.000E+00
RB 93	0.000E+00	0.000E+00	0.000E+00	0.000E+00	0.000E+00	0.000E+00	0.000E+00	0.000E+00	0.000E+00	0.000E+00	0.000E+00	0.000E+00
SR 93	0.000E+00	0.000E+00	0.000E+00	0.000E+00	0.000E+00	0.000E+00	0.000E+00	0.000E+00	0.000E+00	0.000E+00	0.000E+00	0.000E+00
Y 93	0.000E+00	0.000E+00	0.000E+00	0.000E+00	0.000E+00	0.000E+00	0.000E+00	0.000E+00	0.000E+00	0.000E+00	0.000E+00	0.000E+00
ZR 93	0.000E+00	0.000E+00	0.000E+00	0.000E+00	0.000E+00	0.000E+00	0.000E+00	0.000E+00	0.000E+00	0.000E+00	0.000E+00	0.000E+00
NB 93	0.000E+00	0.000E+00	0.000E+00	0.000E+00	0.000E+00	0.000E+00	0.000E+00	0.000E+00	0.000E+00	0.000E+00	0.000E+00	0.000E+00

1 OUTPUT UNIT = 11 PAGE 26

ORIGEN2 V2.1 (8-1-91), Run on 03/10/04 at 13:15:17

* Decay of containment activity on a per cc basis

\+ FISSION PRODUCTS

POWER= 1.00000E+00 MW, BURNUP= 1.00000E+00 MWD, FLUX= 1.00E+00 N/CM**2-SEC

0 7 NUCLIDE TABLE: RADIOACTIVITY, CURIES

	0 HR	1 HR	2 HR	4 HR	8 HR	12 HR	24 HR	48 HR	72 HR	96 HR	144 HR	288 HR
NB 93M	0.000E+00	0.000E+00	0.000E+00	0.000E+00	0.000E+00	0.000E+00	0.000E+00	0.000E+00	0.000E+00	0.000E+00	0.000E+00	0.000E+00
BR 94	0.000E+00	0.000E+00	0.000E+00	0.000E+00	0.000E+00	0.000E+00	0.000E+00	0.000E+00	0.000E+00	0.000E+00	0.000E+00	0.000E+00
KR 94	0.000E+00	0.000E+00	0.000E+00	0.000E+00	0.000E+00	0.000E+00	0.000E+00	0.000E+00	0.000E+00	0.000E+00	0.000E+00	0.000E+00
RB 94	0.000E+00	0.000E+00	0.000E+00	0.000E+00	0.000E+00	0.000E+00	0.000E+00	0.000E+00	0.000E+00	0.000E+00	0.000E+00	0.000E+00
SR 94	0.000E+00	0.000E+00	0.000E+00	0.000E+00	0.000E+00	0.000E+00	0.000E+00	0.000E+00	0.000E+00	0.000E+00	0.000E+00	0.000E+00
Y 94	0.000E+00	0.000E+00	0.000E+00	0.000E+00	0.000E+00	0.000E+00	0.000E+00	0.000E+00	0.000E+00	0.000E+00	0.000E+00	0.000E+00
ZR 94	0.000E+00	0.000E+00	0.000E+00	0.000E+00	0.000E+00	0.000E+00	0.000E+00	0.000E+00	0.000E+00	0.000E+00	0.000E+00	0.000E+00
NB 94	0.000E+00	0.000E+00	0.000E+00	0.000E+00	0.000E+00	0.000E+00	0.000E+00	0.000E+00	0.000E+00	0.000E+00	0.000E+00	0.000E+00
NB 94M	0.000E+00	0.000E+00	0.000E+00	0.000E+00	0.000E+00	0.000E+00	0.000E+00	0.000E+00	0.000E+00	0.000E+00	0.000E+00	0.000E+00
BR 95	0.000E+00	0.000E+00	0.000E+00	0.000E+00	0.000E+00	0.000E+00	0.000E+00	0.000E+00	0.000E+00	0.000E+00	0.000E+00	0.000E+00
KR 95	0.000E+00	0.000E+00	0.000E+00	0.000E+00	0.000E+00	0.000E+00	0.000E+00	0.000E+00	0.000E+00	0.000E+00	0.000E+00	0.000E+00
RB 95	0.000E+00	0.000E+00	0.000E+00	0.000E+00	0.000E+00	0.000E+00	0.000E+00	0.000E+00	0.000E+00	0.000E+00	0.000E+00	0.000E+00
SR 95	0.000E+00	0.000E+00	0.000E+00	0.000E+00	0.000E+00	0.000E+00	0.000E+00	0.000E+00	0.000E+00	0.000E+00	0.000E+00	0.000E+00
Y 95	0.000E+00	0.000E+00	0.000E+00	0.000E+00	0.000E+00	0.000E+00	0.000E+00	0.000E+00	0.000E+00	0.000E+00	0.000E+00	0.000E+00
ZR 95	0.000E+00	0.000E+00	0.000E+00	0.000E+00	0.000E+00	0.000E+00	0.000E+00	0.000E+00	0.000E+00	0.000E+00	0.000E+00	0.000E+00
NB 95	0.000E+00	0.000E+00	0.000E+00	0.000E+00	0.000E+00	0.000E+00	0.000E+00	0.000E+00	0.000E+00	0.000E+00	0.000E+00	0.000E+00
NB 95M	0.000E+00	0.000E+00	0.000E+00	0.000E+00	0.000E+00	0.000E+00	0.000E+00	0.000E+00	0.000E+00	0.000E+00	0.000E+00	0.000E+00
MO 95	0.000E+00	0.000E+00	0.000E+00	0.000E+00	0.000E+00	0.000E+00	0.000E+00	0.000E+00	0.000E+00	0.000E+00	0.000E+00	0.000E+00
BR 96	0.000E+00	0.000E+00	0.000E+00	0.000E+00	0.000E+00	0.000E+00	0.000E+00	0.000E+00	0.000E+00	0.000E+00	0.000E+00	0.000E+00
KR 96	0.000E+00	0.000E+00	0.000E+00	0.000E+00	0.000E+00	0.000E+00	0.000E+00	0.000E+00	0.000E+00	0.000E+00	0.000E+00	0.000E+00
RB 96	0.000E+00	0.000E+00	0.000E+00	0.000E+00	0.000E+00	0.000E+00	0.000E+00	0.000E+00	0.000E+00	0.000E+00	0.000E+00	0.000E+00
SR 96	0.000E+00	0.000E+00	0.000E+00	0.000E+00	0.000E+00	0.000E+00	0.000E+00	0.000E+00	0.000E+00	0.000E+00	0.000E+00	0.000E+00
Y 96	0.000E+00	0.000E+00	0.000E+00	0.000E+00	0.000E+00	0.000E+00	0.000E+00	0.000E+00	0.000E+00	0.000E+00	0.000E+00	0.000E+00
ZR 96	0.000E+00	0.000E+00	0.000E+00	0.000E+00	0.000E+00	0.000E+00	0.000E+00	0.000E+00	0.000E+00	0.000E+00	0.000E+00	0.000E+00
NB 96	0.000E+00	0.000E+00	0.000E+00	0.000E+00	0.000E+00	0.000E+00	0.000E+00	0.000E+00	0.000E+00	0.000E+00	0.000E+00	0.000E+00
MO 96	0.000E+00	0.000E+00	0.000E+00	0.000E+00	0.000E+00	0.000E+00	0.000E+00	0.000E+00	0.000E+00	0.000E+00	0.000E+00	0.000E+00
KR 97	0.000E+00	0.000E+00	0.000E+00	0.000E+00	0.000E+00	0.000E+00	0.000E+00	0.000E+00	0.000E+00	0.000E+00	0.000E+00	0.000E+00
RB 97	0.000E+00	0.000E+00	0.000E+00	0.000E+00	0.000E+00	0.000E+00	0.000E+00	0.000E+00	0.000E+00	0.000E+00	0.000E+00	0.000E+00
SR 97	0.000E+00	0.000E+00	0.000E+00	0.000E+00	0.000E+00	0.000E+00	0.000E+00	0.000E+00	0.000E+00	0.000E+00	0.000E+00	0.000E+00
Y 97	0.000E+00	0.000E+00	0.000E+00	0.000E+00	0.000E+00	0.000E+00	0.000E+00	0.000E+00	0.000E+00	0.000E+00	0.000E+00	0.000E+00
ZR 97	0.000E+00	0.000E+00	0.000E+00	0.000E+00	0.000E+00	0.000E+00	0.000E+00	0.000E+00	0.000E+00	0.000E+00	0.000E+00	0.000E+00
NB 97	0.000E+00	0.000E+00	0.000E+00	0.000E+00	0.000E+00	0.000E+00	0.000E+00	0.000E+00	0.000E+00	0.000E+00	0.000E+00	0.000E+00
NB 97M	0.000E+00	0.000E+00	0.000E+00	0.000E+00	0.000E+00	0.000E+00	0.000E+00	0.000E+00	0.000E+00	0.000E+00	0.000E+00	0.000E+00
MO 97	0.000E+00	0.000E+00	0.000E+00	0.000E+00	0.000E+00	0.000E+00	0.000E+00	0.000E+00	0.000E+00	0.000E+00	0.000E+00	0.000E+00
KR 98	0.000E+00	0.000E+00	0.000E+00	0.000E+00	0.000E+00	0.000E+00	0.000E+00	0.000E+00	0.000E+00	0.000E+00	0.000E+00	0.000E+00
RB 98	0.000E+00	0.000E+00	0.000E+00	0.000E+00	0.000E+00	0.000E+00	0.000E+00	0.000E+00	0.000E+00	0.000E+00	0.000E+00	0.000E+00
SR 98	0.000E+00	0.000E+00	0.000E+00	0.000E+00	0.000E+00	0.000E+00	0.000E+00	0.000E+00	0.000E+00	0.000E+00	0.000E+00	0.000E+00
Y 98	0.000E+00	0.000E+00	0.000E+00	0.000E+00	0.000E+00	0.000E+00	0.000E+00	0.000E+00	0.000E+00	0.000E+00	0.000E+00	0.000E+00
ZR 98	0.000E+00	0.000E+00	0.000E+00	0.000E+00	0.000E+00	0.000E+00	0.000E+00	0.000E+00	0.000E+00	0.000E+00	0.000E+00	0.000E+00
NB 98	0.000E+00	0.000E+00	0.000E+00	0.000E+00	0.000E+00	0.000E+00	0.000E+00	0.000E+00	0.000E+00	0.000E+00	0.000E+00	0.000E+00

NB 98M	0.000E+00	0.000E+00	0.000E+00	0.000E+00	0.000E+00	0.000E+00	0.000E+00	0.000E+00	0.000E+00	0.000E+00	0.000E+00	0.000E+00
MO 98	0.000E+00	0.000E+00	0.000E+00	0.000E+00	0.000E+00	0.000E+00	0.000E+00	0.000E+00	0.000E+00	0.000E+00	0.000E+00	0.000E+00
TC 98	0.000E+00	0.000E+00	0.000E+00	0.000E+00	0.000E+00	0.000E+00	0.000E+00	0.000E+00	0.000E+00	0.000E+00	0.000E+00	0.000E+00
RB 99	0.000E+00	0.000E+00	0.000E+00	0.000E+00	0.000E+00	0.000E+00	0.000E+00	0.000E+00	0.000E+00	0.000E+00	0.000E+00	0.000E+00
SR 99	0.000E+00	0.000E+00	0.000E+00	0.000E+00	0.000E+00	0.000E+00	0.000E+00	0.000E+00	0.000E+00	0.000E+00	0.000E+00	0.000E+00
Y 99	0.000E+00	0.000E+00	0.000E+00	0.000E+00	0.000E+00	0.000E+00	0.000E+00	0.000E+00	0.000E+00	0.000E+00	0.000E+00	0.000E+00
ZR 99	0.000E+00	0.000E+00	0.000E+00	0.000E+00	0.000E+00	0.000E+00	0.000E+00	0.000E+00	0.000E+00	0.000E+00	0.000E+00	0.000E+00
NB 99	0.000E+00	0.000E+00	0.000E+00	0.000E+00	0.000E+00	0.000E+00	0.000E+00	0.000E+00	0.000E+00	0.000E+00	0.000E+00	0.000E+00
NB 99M	0.000E+00	0.000E+00	0.000E+00	0.000E+00	0.000E+00	0.000E+00	0.000E+00	0.000E+00	0.000E+00	0.000E+00	0.000E+00	0.000E+00
MO 99	0.000E+00	0.000E+00	0.000E+00	0.000E+00	0.000E+00	0.000E+00	0.000E+00	0.000E+00	0.000E+00	0.000E+00	0.000E+00	0.000E+00
TC 99	0.000E+00	0.000E+00	0.000E+00	0.000E+00	0.000E+00	0.000E+00	0.000E+00	0.000E+00	0.000E+00	0.000E+00	0.000E+00	0.000E+00

1

OUTPUT UNIT = 11 PAGE 27

ORIGEN2 V2.1 (8-1-91), Run on 03/10/04 at 13:15:17

* Decay of containment activity on a per cc basis

+ FISSION PRODUCTS

POWER= 1.00000E+00 MW, BURNUP= 1.00000E+00 MWD, FLUX= 1.00E+00 N/CM**2-SEC

0 7 NUCLIDE TABLE: RADIOACTIVITY, CURIES

	0 HR	1 HR	2 HR	4 HR	8 HR	12 HR	24 HR	48 HR	72 HR	96 HR	144 HR	288 HR
TC 99M	0.000E+00	0.000E+00	0.000E+00	0.000E+00	0.000E+00	0.000E+00	0.000E+00	0.000E+00	0.000E+00	0.000E+00	0.000E+00	0.000E+00
RU 99	0.000E+00	0.000E+00	0.000E+00	0.000E+00	0.000E+00	0.000E+00	0.000E+00	0.000E+00	0.000E+00	0.000E+00	0.000E+00	0.000E+00
RB100	0.000E+00	0.000E+00	0.000E+00	0.000E+00	0.000E+00	0.000E+00	0.000E+00	0.000E+00	0.000E+00	0.000E+00	0.000E+00	0.000E+00
SR100	0.000E+00	0.000E+00	0.000E+00	0.000E+00	0.000E+00	0.000E+00	0.000E+00	0.000E+00	0.000E+00	0.000E+00	0.000E+00	0.000E+00
Y100	0.000E+00	0.000E+00	0.000E+00	0.000E+00	0.000E+00	0.000E+00	0.000E+00	0.000E+00	0.000E+00	0.000E+00	0.000E+00	0.000E+00
ZR100	0.000E+00	0.000E+00	0.000E+00	0.000E+00	0.000E+00	0.000E+00	0.000E+00	0.000E+00	0.000E+00	0.000E+00	0.000E+00	0.000E+00
NB100	0.000E+00	0.000E+00	0.000E+00	0.000E+00	0.000E+00	0.000E+00	0.000E+00	0.000E+00	0.000E+00	0.000E+00	0.000E+00	0.000E+00
NB100M	0.000E+00	0.000E+00	0.000E+00	0.000E+00	0.000E+00	0.000E+00	0.000E+00	0.000E+00	0.000E+00	0.000E+00	0.000E+00	0.000E+00
MO100	0.000E+00	0.000E+00	0.000E+00	0.000E+00	0.000E+00	0.000E+00	0.000E+00	0.000E+00	0.000E+00	0.000E+00	0.000E+00	0.000E+00
TC100	0.000E+00	0.000E+00	0.000E+00	0.000E+00	0.000E+00	0.000E+00	0.000E+00	0.000E+00	0.000E+00	0.000E+00	0.000E+00	0.000E+00
RU100	0.000E+00	0.000E+00	0.000E+00	0.000E+00	0.000E+00	0.000E+00	0.000E+00	0.000E+00	0.000E+00	0.000E+00	0.000E+00	0.000E+00
RB101	0.000E+00	0.000E+00	0.000E+00	0.000E+00	0.000E+00	0.000E+00	0.000E+00	0.000E+00	0.000E+00	0.000E+00	0.000E+00	0.000E+00
SR101	0.000E+00	0.000E+00	0.000E+00	0.000E+00	0.000E+00	0.000E+00	0.000E+00	0.000E+00	0.000E+00	0.000E+00	0.000E+00	0.000E+00
Y101	0.000E+00	0.000E+00	0.000E+00	0.000E+00	0.000E+00	0.000E+00	0.000E+00	0.000E+00	0.000E+00	0.000E+00	0.000E+00	0.000E+00
ZR101	0.000E+00	0.000E+00	0.000E+00	0.000E+00	0.000E+00	0.000E+00	0.000E+00	0.000E+00	0.000E+00	0.000E+00	0.000E+00	0.000E+00
NB101	0.000E+00	0.000E+00	0.000E+00	0.000E+00	0.000E+00	0.000E+00	0.000E+00	0.000E+00	0.000E+00	0.000E+00	0.000E+00	0.000E+00
MO101	0.000E+00	0.000E+00	0.000E+00	0.000E+00	0.000E+00	0.000E+00	0.000E+00	0.000E+00	0.000E+00	0.000E+00	0.000E+00	0.000E+00
TC101	0.000E+00	0.000E+00	0.000E+00	0.000E+00	0.000E+00	0.000E+00	0.000E+00	0.000E+00	0.000E+00	0.000E+00	0.000E+00	0.000E+00
RU101	0.000E+00	0.000E+00	0.000E+00	0.000E+00	0.000E+00	0.000E+00	0.000E+00	0.000E+00	0.000E+00	0.000E+00	0.000E+00	0.000E+00
SR102	0.000E+00	0.000E+00	0.000E+00	0.000E+00	0.000E+00	0.000E+00	0.000E+00	0.000E+00	0.000E+00	0.000E+00	0.000E+00	0.000E+00
Y102	0.000E+00	0.000E+00	0.000E+00	0.000E+00	0.000E+00	0.000E+00	0.000E+00	0.000E+00	0.000E+00	0.000E+00	0.000E+00	0.000E+00
ZR102	0.000E+00	0.000E+00	0.000E+00	0.000E+00	0.000E+00	0.000E+00	0.000E+00	0.000E+00	0.000E+00	0.000E+00	0.000E+00	0.000E+00
NB102	0.000E+00	0.000E+00	0.000E+00	0.000E+00	0.000E+00	0.000E+00	0.000E+00	0.000E+00	0.000E+00	0.000E+00	0.000E+00	0.000E+00
MO102	0.000E+00	0.000E+00	0.000E+00	0.000E+00	0.000E+00	0.000E+00	0.000E+00	0.000E+00	0.000E+00	0.000E+00	0.000E+00	0.000E+00
TC102	0.000E+00	0.000E+00	0.000E+00	0.000E+00	0.000E+00	0.000E+00	0.000E+00	0.000E+00	0.000E+00	0.000E+00	0.000E+00	0.000E+00
TC102M	0.000E+00	0.000E+00	0.000E+00	0.000E+00	0.000E+00	0.000E+00	0.000E+00	0.000E+00	0.000E+00	0.000E+00	0.000E+00	0.000E+00
RU102	0.000E+00	0.000E+00	0.000E+00	0.000E+00	0.000E+00	0.000E+00	0.000E+00	0.000E+00	0.000E+00	0.000E+00	0.000E+00	0.000E+00
RH102	0.000E+00	0.000E+00	0.000E+00	0.000E+00	0.000E+00	0.000E+00	0.000E+00	0.000E+00	0.000E+00	0.000E+00	0.000E+00	0.000E+00
PD102	0.000E+00	0.000E+00	0.000E+00	0.000E+00	0.000E+00	0.000E+00	0.000E+00	0.000E+00	0.000E+00	0.000E+00	0.000E+00	0.000E+00
SR103	0.000E+00	0.000E+00	0.000E+00	0.000E+00	0.000E+00	0.000E+00	0.000E+00	0.000E+00	0.000E+00	0.000E+00	0.000E+00	0.000E+00
Y103	0.000E+00	0.000E+00	0.000E+00	0.000E+00	0.000E+00	0.000E+00	0.000E+00	0.000E+00	0.000E+00	0.000E+00	0.000E+00	0.000E+00
ZR103	0.000E+00	0.000E+00	0.000E+00	0.000E+00	0.000E+00	0.000E+00	0.000E+00	0.000E+00	0.000E+00	0.000E+00	0.000E+00	0.000E+00
NB103	0.000E+00	0.000E+00	0.000E+00	0.000E+00	0.000E+00	0.000E+00	0.000E+00	0.000E+00	0.000E+00	0.000E+00	0.000E+00	0.000E+00
MO103	0.000E+00	0.000E+00	0.000E+00	0.000E+00	0.000E+00	0.000E+00	0.000E+00	0.000E+00	0.000E+00	0.000E+00	0.000E+00	0.000E+00
TC103	0.000E+00	0.000E+00	0.000E+00	0.000E+00	0.000E+00	0.000E+00	0.000E+00	0.000E+00	0.000E+00	0.000E+00	0.000E+00	0.000E+00
RU103	0.000E+00	0.000E+00	0.000E+00	0.000E+00	0.000E+00	0.000E+00	0.000E+00	0.000E+00	0.000E+00	0.000E+00	0.000E+00	0.000E+00
RH103	0.000E+00	0.000E+00	0.000E+00	0.000E+00	0.000E+00	0.000E+00	0.000E+00	0.000E+00	0.000E+00	0.000E+00	0.000E+00	0.000E+00
RH103M	0.000E+00	0.000E+00	0.000E+00	0.000E+00	0.000E+00	0.000E+00	0.000E+00	0.000E+00	0.000E+00	0.000E+00	0.000E+00	0.000E+00

SR104	0.000E+00	0.000E+00	0.000E+00	0.000E+00	0.000E+00	0.000E+00	0.000E+00	0.000E+00	0.000E+00	0.000E+00	0.000E+00	0.000E+00
Y104	0.000E+00	0.000E+00	0.000E+00	0.000E+00	0.000E+00	0.000E+00	0.000E+00	0.000E+00	0.000E+00	0.000E+00	0.000E+00	0.000E+00
ZR104	0.000E+00	0.000E+00	0.000E+00	0.000E+00	0.000E+00	0.000E+00	0.000E+00	0.000E+00	0.000E+00	0.000E+00	0.000E+00	0.000E+00
NB104	0.000E+00	0.000E+00	0.000E+00	0.000E+00	0.000E+00	0.000E+00	0.000E+00	0.000E+00	0.000E+00	0.000E+00	0.000E+00	0.000E+00
MO104	0.000E+00	0.000E+00	0.000E+00	0.000E+00	0.000E+00	0.000E+00	0.000E+00	0.000E+00	0.000E+00	0.000E+00	0.000E+00	0.000E+00
TC104	0.000E+00	0.000E+00	0.000E+00	0.000E+00	0.000E+00	0.000E+00	0.000E+00	0.000E+00	0.000E+00	0.000E+00	0.000E+00	0.000E+00
RU104	0.000E+00	0.000E+00	0.000E+00	0.000E+00	0.000E+00	0.000E+00	0.000E+00	0.000E+00	0.000E+00	0.000E+00	0.000E+00	0.000E+00
RH104	0.000E+00	0.000E+00	0.000E+00	0.000E+00	0.000E+00	0.000E+00	0.000E+00	0.000E+00	0.000E+00	0.000E+00	0.000E+00	0.000E+00
RH104M	0.000E+00	0.000E+00	0.000E+00	0.000E+00	0.000E+00	0.000E+00	0.000E+00	0.000E+00	0.000E+00	0.000E+00	0.000E+00	0.000E+00
PD104	0.000E+00	0.000E+00	0.000E+00	0.000E+00	0.000E+00	0.000E+00	0.000E+00	0.000E+00	0.000E+00	0.000E+00	0.000E+00	0.000E+00
Y105	0.000E+00	0.000E+00	0.000E+00	0.000E+00	0.000E+00	0.000E+00	0.000E+00	0.000E+00	0.000E+00	0.000E+00	0.000E+00	0.000E+00
ZR105	0.000E+00	0.000E+00	0.000E+00	0.000E+00	0.000E+00	0.000E+00	0.000E+00	0.000E+00	0.000E+00	0.000E+00	0.000E+00	0.000E+00
NB105	0.000E+00	0.000E+00	0.000E+00	0.000E+00	0.000E+00	0.000E+00	0.000E+00	0.000E+00	0.000E+00	0.000E+00	0.000E+00	0.000E+00

1 OUTPUT UNIT = 11 PAGE 28

ORIGEN2 V2.1 (8-1-91), Run on 03/10/04 at 13:15:17

* Decay of containment activity on a per cc basis

\+ FISSION PRODUCTS

POWER= 1.00000E+00 MW, BURNUP= 1.00000E+00 MWD, FLUX= 1.00E+00 N/CM**2-SEC

0 7 NUCLIDE TABLE: RADIOACTIVITY, CURIES

	0 HR	1 HR	2 HR	4 HR	8 HR	12 HR	24 HR	48 HR	72 HR	96 HR	144 HR	288 HR
MO105	0.000E+00	0.000E+00	0.000E+00	0.000E+00	0.000E+00	0.000E+00	0.000E+00	0.000E+00	0.000E+00	0.000E+00	0.000E+00	0.000E+00
TC105	0.000E+00	0.000E+00	0.000E+00	0.000E+00	0.000E+00	0.000E+00	0.000E+00	0.000E+00	0.000E+00	0.000E+00	0.000E+00	0.000E+00
RU105	0.000E+00	0.000E+00	0.000E+00	0.000E+00	0.000E+00	0.000E+00	0.000E+00	0.000E+00	0.000E+00	0.000E+00	0.000E+00	0.000E+00
RH105	0.000E+00	0.000E+00	0.000E+00	0.000E+00	0.000E+00	0.000E+00	0.000E+00	0.000E+00	0.000E+00	0.000E+00	0.000E+00	0.000E+00
RH105M	0.000E+00	0.000E+00	0.000E+00	0.000E+00	0.000E+00	0.000E+00	0.000E+00	0.000E+00	0.000E+00	0.000E+00	0.000E+00	0.000E+00
PD105	0.000E+00	0.000E+00	0.000E+00	0.000E+00	0.000E+00	0.000E+00	0.000E+00	0.000E+00	0.000E+00	0.000E+00	0.000E+00	0.000E+00
Y106	0.000E+00	0.000E+00	0.000E+00	0.000E+00	0.000E+00	0.000E+00	0.000E+00	0.000E+00	0.000E+00	0.000E+00	0.000E+00	0.000E+00
ZR106	0.000E+00	0.000E+00	0.000E+00	0.000E+00	0.000E+00	0.000E+00	0.000E+00	0.000E+00	0.000E+00	0.000E+00	0.000E+00	0.000E+00
NB106	0.000E+00	0.000E+00	0.000E+00	0.000E+00	0.000E+00	0.000E+00	0.000E+00	0.000E+00	0.000E+00	0.000E+00	0.000E+00	0.000E+00
MO106	0.000E+00	0.000E+00	0.000E+00	0.000E+00	0.000E+00	0.000E+00	0.000E+00	0.000E+00	0.000E+00	0.000E+00	0.000E+00	0.000E+00
TC106	0.000E+00	0.000E+00	0.000E+00	0.000E+00	0.000E+00	0.000E+00	0.000E+00	0.000E+00	0.000E+00	0.000E+00	0.000E+00	0.000E+00
RU106	0.000E+00	0.000E+00	0.000E+00	0.000E+00	0.000E+00	0.000E+00	0.000E+00	0.000E+00	0.000E+00	0.000E+00	0.000E+00	0.000E+00
RH106	0.000E+00	0.000E+00	0.000E+00	0.000E+00	0.000E+00	0.000E+00	0.000E+00	0.000E+00	0.000E+00	0.000E+00	0.000E+00	0.000E+00
RH106M	0.000E+00	0.000E+00	0.000E+00	0.000E+00	0.000E+00	0.000E+00	0.000E+00	0.000E+00	0.000E+00	0.000E+00	0.000E+00	0.000E+00
PD106	0.000E+00	0.000E+00	0.000E+00	0.000E+00	0.000E+00	0.000E+00	0.000E+00	0.000E+00	0.000E+00	0.000E+00	0.000E+00	0.000E+00
AG106	0.000E+00	0.000E+00	0.000E+00	0.000E+00	0.000E+00	0.000E+00	0.000E+00	0.000E+00	0.000E+00	0.000E+00	0.000E+00	0.000E+00
Y107	0.000E+00	0.000E+00	0.000E+00	0.000E+00	0.000E+00	0.000E+00	0.000E+00	0.000E+00	0.000E+00	0.000E+00	0.000E+00	0.000E+00
ZR107	0.000E+00	0.000E+00	0.000E+00	0.000E+00	0.000E+00	0.000E+00	0.000E+00	0.000E+00	0.000E+00	0.000E+00	0.000E+00	0.000E+00
NB107	0.000E+00	0.000E+00	0.000E+00	0.000E+00	0.000E+00	0.000E+00	0.000E+00	0.000E+00	0.000E+00	0.000E+00	0.000E+00	0.000E+00
MO107	0.000E+00	0.000E+00	0.000E+00	0.000E+00	0.000E+00	0.000E+00	0.000E+00	0.000E+00	0.000E+00	0.000E+00	0.000E+00	0.000E+00
TC107	0.000E+00	0.000E+00	0.000E+00	0.000E+00	0.000E+00	0.000E+00	0.000E+00	0.000E+00	0.000E+00	0.000E+00	0.000E+00	0.000E+00
RU107	0.000E+00	0.000E+00	0.000E+00	0.000E+00	0.000E+00	0.000E+00	0.000E+00	0.000E+00	0.000E+00	0.000E+00	0.000E+00	0.000E+00
RH107	0.000E+00	0.000E+00	0.000E+00	0.000E+00	0.000E+00	0.000E+00	0.000E+00	0.000E+00	0.000E+00	0.000E+00	0.000E+00	0.000E+00
PD107	0.000E+00	0.000E+00	0.000E+00	0.000E+00	0.000E+00	0.000E+00	0.000E+00	0.000E+00	0.000E+00	0.000E+00	0.000E+00	0.000E+00
PD107M	0.000E+00	0.000E+00	0.000E+00	0.000E+00	0.000E+00	0.000E+00	0.000E+00	0.000E+00	0.000E+00	0.000E+00	0.000E+00	0.000E+00
AG107	0.000E+00	0.000E+00	0.000E+00	0.000E+00	0.000E+00	0.000E+00	0.000E+00	0.000E+00	0.000E+00	0.000E+00	0.000E+00	0.000E+00
ZR108	0.000E+00	0.000E+00	0.000E+00	0.000E+00	0.000E+00	0.000E+00	0.000E+00	0.000E+00	0.000E+00	0.000E+00	0.000E+00	0.000E+00
NB108	0.000E+00	0.000E+00	0.000E+00	0.000E+00	0.000E+00	0.000E+00	0.000E+00	0.000E+00	0.000E+00	0.000E+00	0.000E+00	0.000E+00
MO108	0.000E+00	0.000E+00	0.000E+00	0.000E+00	0.000E+00	0.000E+00	0.000E+00	0.000E+00	0.000E+00	0.000E+00	0.000E+00	0.000E+00
TC108	0.000E+00	0.000E+00	0.000E+00	0.000E+00	0.000E+00	0.000E+00	0.000E+00	0.000E+00	0.000E+00	0.000E+00	0.000E+00	0.000E+00
RU108	0.000E+00	0.000E+00	0.000E+00	0.000E+00	0.000E+00	0.000E+00	0.000E+00	0.000E+00	0.000E+00	0.000E+00	0.000E+00	0.000E+00
RH108	0.000E+00	0.000E+00	0.000E+00	0.000E+00	0.000E+00	0.000E+00	0.000E+00	0.000E+00	0.000E+00	0.000E+00	0.000E+00	0.000E+00
RH108M	0.000E+00	0.000E+00	0.000E+00	0.000E+00	0.000E+00	0.000E+00	0.000E+00	0.000E+00	0.000E+00	0.000E+00	0.000E+00	0.000E+00
PD108	0.000E+00	0.000E+00	0.000E+00	0.000E+00	0.000E+00	0.000E+00	0.000E+00	0.000E+00	0.000E+00	0.000E+00	0.000E+00	0.000E+00
AG108	0.000E+00	0.000E+00	0.000E+00	0.000E+00	0.000E+00	0.000E+00	0.000E+00	0.000E+00	0.000E+00	0.000E+00	0.000E+00	0.000E+00
AG108M	0.000E+00	0.000E+00	0.000E+00	0.000E+00	0.000E+00	0.000E+00	0.000E+00	0.000E+00	0.000E+00	0.000E+00	0.000E+00	0.000E+00

CD108	0.000E+00	0.000E+00	0.000E+00	0.000E+00	0.000E+00	0.000E+00	0.000E+00	0.000E+00	0.000E+00	0.000E+00	0.000E+00	0.000E+00
ZR109	0.000E+00	0.000E+00	0.000E+00	0.000E+00	0.000E+00	0.000E+00	0.000E+00	0.000E+00	0.000E+00	0.000E+00	0.000E+00	0.000E+00
NB109	0.000E+00	0.000E+00	0.000E+00	0.000E+00	0.000E+00	0.000E+00	0.000E+00	0.000E+00	0.000E+00	0.000E+00	0.000E+00	0.000E+00
MO109	0.000E+00	0.000E+00	0.000E+00	0.000E+00	0.000E+00	0.000E+00	0.000E+00	0.000E+00	0.000E+00	0.000E+00	0.000E+00	0.000E+00
TC109	0.000E+00	0.000E+00	0.000E+00	0.000E+00	0.000E+00	0.000E+00	0.000E+00	0.000E+00	0.000E+00	0.000E+00	0.000E+00	0.000E+00
RU109	0.000E+00	0.000E+00	0.000E+00	0.000E+00	0.000E+00	0.000E+00	0.000E+00	0.000E+00	0.000E+00	0.000E+00	0.000E+00	0.000E+00
RH109	0.000E+00	0.000E+00	0.000E+00	0.000E+00	0.000E+00	0.000E+00	0.000E+00	0.000E+00	0.000E+00	0.000E+00	0.000E+00	0.000E+00
RH109M	0.000E+00	0.000E+00	0.000E+00	0.000E+00	0.000E+00	0.000E+00	0.000E+00	0.000E+00	0.000E+00	0.000E+00	0.000E+00	0.000E+00
PD109	0.000E+00	0.000E+00	0.000E+00	0.000E+00	0.000E+00	0.000E+00	0.000E+00	0.000E+00	0.000E+00	0.000E+00	0.000E+00	0.000E+00
PD109M	0.000E+00	0.000E+00	0.000E+00	0.000E+00	0.000E+00	0.000E+00	0.000E+00	0.000E+00	0.000E+00	0.000E+00	0.000E+00	0.000E+00
AG109	0.000E+00	0.000E+00	0.000E+00	0.000E+00	0.000E+00	0.000E+00	0.000E+00	0.000E+00	0.000E+00	0.000E+00	0.000E+00	0.000E+00
AG109M	0.000E+00	0.000E+00	0.000E+00	0.000E+00	0.000E+00	0.000E+00	0.000E+00	0.000E+00	0.000E+00	0.000E+00	0.000E+00	0.000E+00
CD109	0.000E+00	0.000E+00	0.000E+00	0.000E+00	0.000E+00	0.000E+00	0.000E+00	0.000E+00	0.000E+00	0.000E+00	0.000E+00	0.000E+00
NB110	0.000E+00	0.000E+00	0.000E+00	0.000E+00	0.000E+00	0.000E+00	0.000E+00	0.000E+00	0.000E+00	0.000E+00	0.000E+00	0.000E+00
MO110	0.000E+00	0.000E+00	0.000E+00	0.000E+00	0.000E+00	0.000E+00	0.000E+00	0.000E+00	0.000E+00	0.000E+00	0.000E+00	0.000E+00

1 OUTPUT UNIT = 11 PAGE 29

ORIGEN2 V2.1 (8-1-91), Run on 03/10/04 at 13:15:17

* Decay of containment activity on a per cc basis

\+ FISSION PRODUCTS

POWER= 1.00000E+00 MW, BURNUP= 1.00000E+00 MWD, FLUX= 1.00E+00 N/CM**2-SEC

0 7 NUCLIDE TABLE: RADIOACTIVITY, CURIES

	0 HR	1 HR	2 HR	4 HR	8 HR	12 HR	24 HR	48 HR	72 HR	96 HR	144 HR	288 HR
TC110	0.000E+00	0.000E+00	0.000E+00	0.000E+00	0.000E+00	0.000E+00	0.000E+00	0.000E+00	0.000E+00	0.000E+00	0.000E+00	0.000E+00
RU110	0.000E+00	0.000E+00	0.000E+00	0.000E+00	0.000E+00	0.000E+00	0.000E+00	0.000E+00	0.000E+00	0.000E+00	0.000E+00	0.000E+00
RH110	0.000E+00	0.000E+00	0.000E+00	0.000E+00	0.000E+00	0.000E+00	0.000E+00	0.000E+00	0.000E+00	0.000E+00	0.000E+00	0.000E+00
RH110M	0.000E+00	0.000E+00	0.000E+00	0.000E+00	0.000E+00	0.000E+00	0.000E+00	0.000E+00	0.000E+00	0.000E+00	0.000E+00	0.000E+00
PD110	0.000E+00	0.000E+00	0.000E+00	0.000E+00	0.000E+00	0.000E+00	0.000E+00	0.000E+00	0.000E+00	0.000E+00	0.000E+00	0.000E+00
AG110	0.000E+00	0.000E+00	0.000E+00	0.000E+00	0.000E+00	0.000E+00	0.000E+00	0.000E+00	0.000E+00	0.000E+00	0.000E+00	0.000E+00
AG110M	0.000E+00	0.000E+00	0.000E+00	0.000E+00	0.000E+00	0.000E+00	0.000E+00	0.000E+00	0.000E+00	0.000E+00	0.000E+00	0.000E+00
CD110	0.000E+00	0.000E+00	0.000E+00	0.000E+00	0.000E+00	0.000E+00	0.000E+00	0.000E+00	0.000E+00	0.000E+00	0.000E+00	0.000E+00
NB111	0.000E+00	0.000E+00	0.000E+00	0.000E+00	0.000E+00	0.000E+00	0.000E+00	0.000E+00	0.000E+00	0.000E+00	0.000E+00	0.000E+00
MO111	0.000E+00	0.000E+00	0.000E+00	0.000E+00	0.000E+00	0.000E+00	0.000E+00	0.000E+00	0.000E+00	0.000E+00	0.000E+00	0.000E+00
TC111	0.000E+00	0.000E+00	0.000E+00	0.000E+00	0.000E+00	0.000E+00	0.000E+00	0.000E+00	0.000E+00	0.000E+00	0.000E+00	0.000E+00
RU111	0.000E+00	0.000E+00	0.000E+00	0.000E+00	0.000E+00	0.000E+00	0.000E+00	0.000E+00	0.000E+00	0.000E+00	0.000E+00	0.000E+00
RH111	0.000E+00	0.000E+00	0.000E+00	0.000E+00	0.000E+00	0.000E+00	0.000E+00	0.000E+00	0.000E+00	0.000E+00	0.000E+00	0.000E+00
PD111	0.000E+00	0.000E+00	0.000E+00	0.000E+00	0.000E+00	0.000E+00	0.000E+00	0.000E+00	0.000E+00	0.000E+00	0.000E+00	0.000E+00
PD111M	0.000E+00	0.000E+00	0.000E+00	0.000E+00	0.000E+00	0.000E+00	0.000E+00	0.000E+00	0.000E+00	0.000E+00	0.000E+00	0.000E+00
AG111	0.000E+00	0.000E+00	0.000E+00	0.000E+00	0.000E+00	0.000E+00	0.000E+00	0.000E+00	0.000E+00	0.000E+00	0.000E+00	0.000E+00
AG111M	0.000E+00	0.000E+00	0.000E+00	0.000E+00	0.000E+00	0.000E+00	0.000E+00	0.000E+00	0.000E+00	0.000E+00	0.000E+00	0.000E+00
CD111	0.000E+00	0.000E+00	0.000E+00	0.000E+00	0.000E+00	0.000E+00	0.000E+00	0.000E+00	0.000E+00	0.000E+00	0.000E+00	0.000E+00
CD111M	0.000E+00	0.000E+00	0.000E+00	0.000E+00	0.000E+00	0.000E+00	0.000E+00	0.000E+00	0.000E+00	0.000E+00	0.000E+00	0.000E+00
NB112	0.000E+00	0.000E+00	0.000E+00	0.000E+00	0.000E+00	0.000E+00	0.000E+00	0.000E+00	0.000E+00	0.000E+00	0.000E+00	0.000E+00
MO112	0.000E+00	0.000E+00	0.000E+00	0.000E+00	0.000E+00	0.000E+00	0.000E+00	0.000E+00	0.000E+00	0.000E+00	0.000E+00	0.000E+00
TC112	0.000E+00	0.000E+00	0.000E+00	0.000E+00	0.000E+00	0.000E+00	0.000E+00	0.000E+00	0.000E+00	0.000E+00	0.000E+00	0.000E+00
RU112	0.000E+00	0.000E+00	0.000E+00	0.000E+00	0.000E+00	0.000E+00	0.000E+00	0.000E+00	0.000E+00	0.000E+00	0.000E+00	0.000E+00
RH112	0.000E+00	0.000E+00	0.000E+00	0.000E+00	0.000E+00	0.000E+00	0.000E+00	0.000E+00	0.000E+00	0.000E+00	0.000E+00	0.000E+00
PD112	0.000E+00	0.000E+00	0.000E+00	0.000E+00	0.000E+00	0.000E+00	0.000E+00	0.000E+00	0.000E+00	0.000E+00	0.000E+00	0.000E+00
AG112	0.000E+00	0.000E+00	0.000E+00	0.000E+00	0.000E+00	0.000E+00	0.000E+00	0.000E+00	0.000E+00	0.000E+00	0.000E+00	0.000E+00
CD112	0.000E+00	0.000E+00	0.000E+00	0.000E+00	0.000E+00	0.000E+00	0.000E+00	0.000E+00	0.000E+00	0.000E+00	0.000E+00	0.000E+00
MO113	0.000E+00	0.000E+00	0.000E+00	0.000E+00	0.000E+00	0.000E+00	0.000E+00	0.000E+00	0.000E+00	0.000E+00	0.000E+00	0.000E+00
TC113	0.000E+00	0.000E+00	0.000E+00	0.000E+00	0.000E+00	0.000E+00	0.000E+00	0.000E+00	0.000E+00	0.000E+00	0.000E+00	0.000E+00
RU113	0.000E+00	0.000E+00	0.000E+00	0.000E+00	0.000E+00	0.000E+00	0.000E+00	0.000E+00	0.000E+00	0.000E+00	0.000E+00	0.000E+00
RH113	0.000E+00	0.000E+00	0.000E+00	0.000E+00	0.000E+00	0.000E+00	0.000E+00	0.000E+00	0.000E+00	0.000E+00	0.000E+00	0.000E+00
PD113	0.000E+00	0.000E+00	0.000E+00	0.000E+00	0.000E+00	0.000E+00	0.000E+00	0.000E+00	0.000E+00	0.000E+00	0.000E+00	0.000E+00
AG113	0.000E+00	0.000E+00	0.000E+00	0.000E+00	0.000E+00	0.000E+00	0.000E+00	0.000E+00	0.000E+00	0.000E+00	0.000E+00	0.000E+00
AG113M	0.000E+00	0.000E+00	0.000E+00	0.000E+00	0.000E+00	0.000E+00	0.000E+00	0.000E+00	0.000E+00	0.000E+00	0.000E+00	0.000E+00

CD113	0.000E+00	0.000E+00	0.000E+00	0.000E+00	0.000E+00	0.000E+00	0.000E+00	0.000E+00	0.000E+00	0.000E+00	0.000E+00	0.000E+00
CD113M	0.000E+00	0.000E+00	0.000E+00	0.000E+00	0.000E+00	0.000E+00	0.000E+00	0.000E+00	0.000E+00	0.000E+00	0.000E+00	0.000E+00
IN113	0.000E+00	0.000E+00	0.000E+00	0.000E+00	0.000E+00	0.000E+00	0.000E+00	0.000E+00	0.000E+00	0.000E+00	0.000E+00	0.000E+00
IN113M	0.000E+00	0.000E+00	0.000E+00	0.000E+00	0.000E+00	0.000E+00	0.000E+00	0.000E+00	0.000E+00	0.000E+00	0.000E+00	0.000E+00
MO114	0.000E+00	0.000E+00	0.000E+00	0.000E+00	0.000E+00	0.000E+00	0.000E+00	0.000E+00	0.000E+00	0.000E+00	0.000E+00	0.000E+00
TC114	0.000E+00	0.000E+00	0.000E+00	0.000E+00	0.000E+00	0.000E+00	0.000E+00	0.000E+00	0.000E+00	0.000E+00	0.000E+00	0.000E+00
RU114	0.000E+00	0.000E+00	0.000E+00	0.000E+00	0.000E+00	0.000E+00	0.000E+00	0.000E+00	0.000E+00	0.000E+00	0.000E+00	0.000E+00
RH114	0.000E+00	0.000E+00	0.000E+00	0.000E+00	0.000E+00	0.000E+00	0.000E+00	0.000E+00	0.000E+00	0.000E+00	0.000E+00	0.000E+00
PD114	0.000E+00	0.000E+00	0.000E+00	0.000E+00	0.000E+00	0.000E+00	0.000E+00	0.000E+00	0.000E+00	0.000E+00	0.000E+00	0.000E+00
AG114	0.000E+00	0.000E+00	0.000E+00	0.000E+00	0.000E+00	0.000E+00	0.000E+00	0.000E+00	0.000E+00	0.000E+00	0.000E+00	0.000E+00
CD114	0.000E+00	0.000E+00	0.000E+00	0.000E+00	0.000E+00	0.000E+00	0.000E+00	0.000E+00	0.000E+00	0.000E+00	0.000E+00	0.000E+00
IN114	0.000E+00	0.000E+00	0.000E+00	0.000E+00	0.000E+00	0.000E+00	0.000E+00	0.000E+00	0.000E+00	0.000E+00	0.000E+00	0.000E+00
IN114M	0.000E+00	0.000E+00	0.000E+00	0.000E+00	0.000E+00	0.000E+00	0.000E+00	0.000E+00	0.000E+00	0.000E+00	0.000E+00	0.000E+00
SN114	0.000E+00	0.000E+00	0.000E+00	0.000E+00	0.000E+00	0.000E+00	0.000E+00	0.000E+00	0.000E+00	0.000E+00	0.000E+00	0.000E+00
MO115	0.000E+00	0.000E+00	0.000E+00	0.000E+00	0.000E+00	0.000E+00	0.000E+00	0.000E+00	0.000E+00	0.000E+00	0.000E+00	0.000E+00
TC115	0.000E+00	0.000E+00	0.000E+00	0.000E+00	0.000E+00	0.000E+00	0.000E+00	0.000E+00	0.000E+00	0.000E+00	0.000E+00	0.000E+00
RU115	0.000E+00	0.000E+00	0.000E+00	0.000E+00	0.000E+00	0.000E+00	0.000E+00	0.000E+00	0.000E+00	0.000E+00	0.000E+00	0.000E+00

1 OUTPUT UNIT = 11 PAGE 30

ORIGEN2 V2.1 (8-1-91), Run on 03/10/04 at 13:15:17

* Decay of containment activity on a per cc basis

\+ FISSION PRODUCTS

POWER= 1.00000E+00 MW, BURNUP= 1.00000E+00 MWD, FLUX= 1.00E+00 N/CM**2-SEC

0 7 NUCLIDE TABLE: RADIOACTIVITY, CURIES

	0 HR	1 HR	2 HR	4 HR	8 HR	12 HR	24 HR	48 HR	72 HR	96 HR	144 HR	288 HR
RH115	0.000E+00	0.000E+00	0.000E+00	0.000E+00	0.000E+00	0.000E+00	0.000E+00	0.000E+00	0.000E+00	0.000E+00	0.000E+00	0.000E+00
PD115	0.000E+00	0.000E+00	0.000E+00	0.000E+00	0.000E+00	0.000E+00	0.000E+00	0.000E+00	0.000E+00	0.000E+00	0.000E+00	0.000E+00
AG115	0.000E+00	0.000E+00	0.000E+00	0.000E+00	0.000E+00	0.000E+00	0.000E+00	0.000E+00	0.000E+00	0.000E+00	0.000E+00	0.000E+00
AG115M	0.000E+00	0.000E+00	0.000E+00	0.000E+00	0.000E+00	0.000E+00	0.000E+00	0.000E+00	0.000E+00	0.000E+00	0.000E+00	0.000E+00
CD115	0.000E+00	0.000E+00	0.000E+00	0.000E+00	0.000E+00	0.000E+00	0.000E+00	0.000E+00	0.000E+00	0.000E+00	0.000E+00	0.000E+00
CD115M	0.000E+00	0.000E+00	0.000E+00	0.000E+00	0.000E+00	0.000E+00	0.000E+00	0.000E+00	0.000E+00	0.000E+00	0.000E+00	0.000E+00
IN115	0.000E+00	0.000E+00	0.000E+00	0.000E+00	0.000E+00	0.000E+00	0.000E+00	0.000E+00	0.000E+00	0.000E+00	0.000E+00	0.000E+00
IN115M	0.000E+00	0.000E+00	0.000E+00	0.000E+00	0.000E+00	0.000E+00	0.000E+00	0.000E+00	0.000E+00	0.000E+00	0.000E+00	0.000E+00
SN115	0.000E+00	0.000E+00	0.000E+00	0.000E+00	0.000E+00	0.000E+00	0.000E+00	0.000E+00	0.000E+00	0.000E+00	0.000E+00	0.000E+00
TC116	0.000E+00	0.000E+00	0.000E+00	0.000E+00	0.000E+00	0.000E+00	0.000E+00	0.000E+00	0.000E+00	0.000E+00	0.000E+00	0.000E+00
RU116	0.000E+00	0.000E+00	0.000E+00	0.000E+00	0.000E+00	0.000E+00	0.000E+00	0.000E+00	0.000E+00	0.000E+00	0.000E+00	0.000E+00
RH116	0.000E+00	0.000E+00	0.000E+00	0.000E+00	0.000E+00	0.000E+00	0.000E+00	0.000E+00	0.000E+00	0.000E+00	0.000E+00	0.000E+00
PD116	0.000E+00	0.000E+00	0.000E+00	0.000E+00	0.000E+00	0.000E+00	0.000E+00	0.000E+00	0.000E+00	0.000E+00	0.000E+00	0.000E+00
AG116	0.000E+00	0.000E+00	0.000E+00	0.000E+00	0.000E+00	0.000E+00	0.000E+00	0.000E+00	0.000E+00	0.000E+00	0.000E+00	0.000E+00
AG116M	0.000E+00	0.000E+00	0.000E+00	0.000E+00	0.000E+00	0.000E+00	0.000E+00	0.000E+00	0.000E+00	0.000E+00	0.000E+00	0.000E+00
CD116	0.000E+00	0.000E+00	0.000E+00	0.000E+00	0.000E+00	0.000E+00	0.000E+00	0.000E+00	0.000E+00	0.000E+00	0.000E+00	0.000E+00
IN116	0.000E+00	0.000E+00	0.000E+00	0.000E+00	0.000E+00	0.000E+00	0.000E+00	0.000E+00	0.000E+00	0.000E+00	0.000E+00	0.000E+00
IN116M	0.000E+00	0.000E+00	0.000E+00	0.000E+00	0.000E+00	0.000E+00	0.000E+00	0.000E+00	0.000E+00	0.000E+00	0.000E+00	0.000E+00
SN116	0.000E+00	0.000E+00	0.000E+00	0.000E+00	0.000E+00	0.000E+00	0.000E+00	0.000E+00	0.000E+00	0.000E+00	0.000E+00	0.000E+00
TC117	0.000E+00	0.000E+00	0.000E+00	0.000E+00	0.000E+00	0.000E+00	0.000E+00	0.000E+00	0.000E+00	0.000E+00	0.000E+00	0.000E+00
RU117	0.000E+00	0.000E+00	0.000E+00	0.000E+00	0.000E+00	0.000E+00	0.000E+00	0.000E+00	0.000E+00	0.000E+00	0.000E+00	0.000E+00
RH117	0.000E+00	0.000E+00	0.000E+00	0.000E+00	0.000E+00	0.000E+00	0.000E+00	0.000E+00	0.000E+00	0.000E+00	0.000E+00	0.000E+00
PD117	0.000E+00	0.000E+00	0.000E+00	0.000E+00	0.000E+00	0.000E+00	0.000E+00	0.000E+00	0.000E+00	0.000E+00	0.000E+00	0.000E+00
AG117	0.000E+00	0.000E+00	0.000E+00	0.000E+00	0.000E+00	0.000E+00	0.000E+00	0.000E+00	0.000E+00	0.000E+00	0.000E+00	0.000E+00
AG117M	0.000E+00	0.000E+00	0.000E+00	0.000E+00	0.000E+00	0.000E+00	0.000E+00	0.000E+00	0.000E+00	0.000E+00	0.000E+00	0.000E+00
CD117	0.000E+00	0.000E+00	0.000E+00	0.000E+00	0.000E+00	0.000E+00	0.000E+00	0.000E+00	0.000E+00	0.000E+00	0.000E+00	0.000E+00
CD117M	0.000E+00	0.000E+00	0.000E+00	0.000E+00	0.000E+00	0.000E+00	0.000E+00	0.000E+00	0.000E+00	0.000E+00	0.000E+00	0.000E+00
IN117	0.000E+00	0.000E+00	0.000E+00	0.000E+00	0.000E+00	0.000E+00	0.000E+00	0.000E+00	0.000E+00	0.000E+00	0.000E+00	0.000E+00
IN117M	0.000E+00	0.000E+00	0.000E+00	0.000E+00	0.000E+00	0.000E+00	0.000E+00	0.000E+00	0.000E+00	0.000E+00	0.000E+00	0.000E+00
SN117	0.000E+00	0.000E+00	0.000E+00	0.000E+00	0.000E+00	0.000E+00	0.000E+00	0.000E+00	0.000E+00	0.000E+00	0.000E+00	0.000E+00
SN117M	0.000E+00	0.000E+00	0.000E+00	0.000E+00	0.000E+00	0.000E+00	0.000E+00	0.000E+00	0.000E+00	0.000E+00	0.000E+00	0.000E+00
TC118	0.000E+00	0.000E+00	0.000E+00	0.000E+00	0.000E+00	0.000E+00	0.000E+00	0.000E+00	0.000E+00	0.000E+00	0.000E+00	0.000E+00

RU118	0.000E+00	0.000E+00	0.000E+00	0.000E+00	0.000E+00	0.000E+00	0.000E+00	0.000E+00	0.000E+00	0.000E+00	0.000E+00	0.000E+00
RH118	0.000E+00	0.000E+00	0.000E+00	0.000E+00	0.000E+00	0.000E+00	0.000E+00	0.000E+00	0.000E+00	0.000E+00	0.000E+00	0.000E+00
PD118	0.000E+00	0.000E+00	0.000E+00	0.000E+00	0.000E+00	0.000E+00	0.000E+00	0.000E+00	0.000E+00	0.000E+00	0.000E+00	0.000E+00
AG118	0.000E+00	0.000E+00	0.000E+00	0.000E+00	0.000E+00	0.000E+00	0.000E+00	0.000E+00	0.000E+00	0.000E+00	0.000E+00	0.000E+00
AG118M	0.000E+00	0.000E+00	0.000E+00	0.000E+00	0.000E+00	0.000E+00	0.000E+00	0.000E+00	0.000E+00	0.000E+00	0.000E+00	0.000E+00
CD118	0.000E+00	0.000E+00	0.000E+00	0.000E+00	0.000E+00	0.000E+00	0.000E+00	0.000E+00	0.000E+00	0.000E+00	0.000E+00	0.000E+00
IN118	0.000E+00	0.000E+00	0.000E+00	0.000E+00	0.000E+00	0.000E+00	0.000E+00	0.000E+00	0.000E+00	0.000E+00	0.000E+00	0.000E+00
IN118M	0.000E+00	0.000E+00	0.000E+00	0.000E+00	0.000E+00	0.000E+00	0.000E+00	0.000E+00	0.000E+00	0.000E+00	0.000E+00	0.000E+00
SN118	0.000E+00	0.000E+00	0.000E+00	0.000E+00	0.000E+00	0.000E+00	0.000E+00	0.000E+00	0.000E+00	0.000E+00	0.000E+00	0.000E+00
RU119	0.000E+00	0.000E+00	0.000E+00	0.000E+00	0.000E+00	0.000E+00	0.000E+00	0.000E+00	0.000E+00	0.000E+00	0.000E+00	0.000E+00
RH119	0.000E+00	0.000E+00	0.000E+00	0.000E+00	0.000E+00	0.000E+00	0.000E+00	0.000E+00	0.000E+00	0.000E+00	0.000E+00	0.000E+00
PD119	0.000E+00	0.000E+00	0.000E+00	0.000E+00	0.000E+00	0.000E+00	0.000E+00	0.000E+00	0.000E+00	0.000E+00	0.000E+00	0.000E+00
AG119	0.000E+00	0.000E+00	0.000E+00	0.000E+00	0.000E+00	0.000E+00	0.000E+00	0.000E+00	0.000E+00	0.000E+00	0.000E+00	0.000E+00
CD119	0.000E+00	0.000E+00	0.000E+00	0.000E+00	0.000E+00	0.000E+00	0.000E+00	0.000E+00	0.000E+00	0.000E+00	0.000E+00	0.000E+00
CD119M	0.000E+00	0.000E+00	0.000E+00	0.000E+00	0.000E+00	0.000E+00	0.000E+00	0.000E+00	0.000E+00	0.000E+00	0.000E+00	0.000E+00
IN119	0.000E+00	0.000E+00	0.000E+00	0.000E+00	0.000E+00	0.000E+00	0.000E+00	0.000E+00	0.000E+00	0.000E+00	0.000E+00	0.000E+00
IN119M	0.000E+00	0.000E+00	0.000E+00	0.000E+00	0.000E+00	0.000E+00	0.000E+00	0.000E+00	0.000E+00	0.000E+00	0.000E+00	0.000E+00
SN119	0.000E+00	0.000E+00	0.000E+00	0.000E+00	0.000E+00	0.000E+00	0.000E+00	0.000E+00	0.000E+00	0.000E+00	0.000E+00	0.000E+00
SN119M	0.000E+00	0.000E+00	0.000E+00	0.000E+00	0.000E+00	0.000E+00	0.000E+00	0.000E+00	0.000E+00	0.000E+00	0.000E+00	0.000E+00

1 OUTPUT UNIT = 11 PAGE 31

ORIGEN2 V2.1 (8-1-91), Run on 03/10/04 at 13:15:17

* Decay of containment activity on a per cc basis

\+ FISSION PRODUCTS

POWER= 1.00000E+00 MW, BURNUP= 1.00000E+00 MWD, FLUX= 1.00E+00 N/CM**2-SEC

0 7 NUCLIDE TABLE: RADIOACTIVITY, CURIES

	0 HR	1 HR	2 HR	4 HR	8 HR	12 HR	24 HR	48 HR	72 HR	96 HR	144 HR	288 HR
RU120	0.000E+00	0.000E+00	0.000E+00	0.000E+00	0.000E+00	0.000E+00	0.000E+00	0.000E+00	0.000E+00	0.000E+00	0.000E+00	0.000E+00
RH120	0.000E+00	0.000E+00	0.000E+00	0.000E+00	0.000E+00	0.000E+00	0.000E+00	0.000E+00	0.000E+00	0.000E+00	0.000E+00	0.000E+00
PD120	0.000E+00	0.000E+00	0.000E+00	0.000E+00	0.000E+00	0.000E+00	0.000E+00	0.000E+00	0.000E+00	0.000E+00	0.000E+00	0.000E+00
AG120	0.000E+00	0.000E+00	0.000E+00	0.000E+00	0.000E+00	0.000E+00	0.000E+00	0.000E+00	0.000E+00	0.000E+00	0.000E+00	0.000E+00
CD120	0.000E+00	0.000E+00	0.000E+00	0.000E+00	0.000E+00	0.000E+00	0.000E+00	0.000E+00	0.000E+00	0.000E+00	0.000E+00	0.000E+00
IN120	0.000E+00	0.000E+00	0.000E+00	0.000E+00	0.000E+00	0.000E+00	0.000E+00	0.000E+00	0.000E+00	0.000E+00	0.000E+00	0.000E+00
IN120M	0.000E+00	0.000E+00	0.000E+00	0.000E+00	0.000E+00	0.000E+00	0.000E+00	0.000E+00	0.000E+00	0.000E+00	0.000E+00	0.000E+00
SN120	0.000E+00	0.000E+00	0.000E+00	0.000E+00	0.000E+00	0.000E+00	0.000E+00	0.000E+00	0.000E+00	0.000E+00	0.000E+00	0.000E+00
RH121	0.000E+00	0.000E+00	0.000E+00	0.000E+00	0.000E+00	0.000E+00	0.000E+00	0.000E+00	0.000E+00	0.000E+00	0.000E+00	0.000E+00
PD121	0.000E+00	0.000E+00	0.000E+00	0.000E+00	0.000E+00	0.000E+00	0.000E+00	0.000E+00	0.000E+00	0.000E+00	0.000E+00	0.000E+00
AG121	0.000E+00	0.000E+00	0.000E+00	0.000E+00	0.000E+00	0.000E+00	0.000E+00	0.000E+00	0.000E+00	0.000E+00	0.000E+00	0.000E+00
CD121	0.000E+00	0.000E+00	0.000E+00	0.000E+00	0.000E+00	0.000E+00	0.000E+00	0.000E+00	0.000E+00	0.000E+00	0.000E+00	0.000E+00
IN121	0.000E+00	0.000E+00	0.000E+00	0.000E+00	0.000E+00	0.000E+00	0.000E+00	0.000E+00	0.000E+00	0.000E+00	0.000E+00	0.000E+00
IN121M	0.000E+00	0.000E+00	0.000E+00	0.000E+00	0.000E+00	0.000E+00	0.000E+00	0.000E+00	0.000E+00	0.000E+00	0.000E+00	0.000E+00
SN121	0.000E+00	0.000E+00	0.000E+00	0.000E+00	0.000E+00	0.000E+00	0.000E+00	0.000E+00	0.000E+00	0.000E+00	0.000E+00	0.000E+00
SN121M	0.000E+00	0.000E+00	0.000E+00	0.000E+00	0.000E+00	0.000E+00	0.000E+00	0.000E+00	0.000E+00	0.000E+00	0.000E+00	0.000E+00
SB121	0.000E+00	0.000E+00	0.000E+00	0.000E+00	0.000E+00	0.000E+00	0.000E+00	0.000E+00	0.000E+00	0.000E+00	0.000E+00	0.000E+00
RH122	0.000E+00	0.000E+00	0.000E+00	0.000E+00	0.000E+00	0.000E+00	0.000E+00	0.000E+00	0.000E+00	0.000E+00	0.000E+00	0.000E+00
PD122	0.000E+00	0.000E+00	0.000E+00	0.000E+00	0.000E+00	0.000E+00	0.000E+00	0.000E+00	0.000E+00	0.000E+00	0.000E+00	0.000E+00
AG122	0.000E+00	0.000E+00	0.000E+00	0.000E+00	0.000E+00	0.000E+00	0.000E+00	0.000E+00	0.000E+00	0.000E+00	0.000E+00	0.000E+00
CD122	0.000E+00	0.000E+00	0.000E+00	0.000E+00	0.000E+00	0.000E+00	0.000E+00	0.000E+00	0.000E+00	0.000E+00	0.000E+00	0.000E+00
IN122	0.000E+00	0.000E+00	0.000E+00	0.000E+00	0.000E+00	0.000E+00	0.000E+00	0.000E+00	0.000E+00	0.000E+00	0.000E+00	0.000E+00
IN122M	0.000E+00	0.000E+00	0.000E+00	0.000E+00	0.000E+00	0.000E+00	0.000E+00	0.000E+00	0.000E+00	0.000E+00	0.000E+00	0.000E+00
SN122	0.000E+00	0.000E+00	0.000E+00	0.000E+00	0.000E+00	0.000E+00	0.000E+00	0.000E+00	0.000E+00	0.000E+00	0.000E+00	0.000E+00
SB122	0.000E+00	0.000E+00	0.000E+00	0.000E+00	0.000E+00	0.000E+00	0.000E+00	0.000E+00	0.000E+00	0.000E+00	0.000E+00	0.000E+00
SB122M	0.000E+00	0.000E+00	0.000E+00	0.000E+00	0.000E+00	0.000E+00	0.000E+00	0.000E+00	0.000E+00	0.000E+00	0.000E+00	0.000E+00
TE122	0.000E+00	0.000E+00	0.000E+00	0.000E+00	0.000E+00	0.000E+00	0.000E+00	0.000E+00	0.000E+00	0.000E+00	0.000E+00	0.000E+00
RH123	0.000E+00	0.000E+00	0.000E+00	0.000E+00	0.000E+00	0.000E+00	0.000E+00	0.000E+00	0.000E+00	0.000E+00	0.000E+00	0.000E+00
PD123	0.000E+00	0.000E+00	0.000E+00	0.000E+00	0.000E+00	0.000E+00	0.000E+00	0.000E+00	0.000E+00	0.000E+00	0.000E+00	0.000E+00
AG123	0.000E+00	0.000E+00	0.000E+00	0.000E+00	0.000E+00	0.000E+00	0.000E+00	0.000E+00	0.000E+00	0.000E+00	0.000E+00	0.000E+00

CD123	0.000E+00	0.000E+00	0.000E+00	0.000E+00	0.000E+00	0.000E+00	0.000E+00	0.000E+00	0.000E+00	0.000E+00	0.000E+00	0.000E+00
IN123	0.000E+00	0.000E+00	0.000E+00	0.000E+00	0.000E+00	0.000E+00	0.000E+00	0.000E+00	0.000E+00	0.000E+00	0.000E+00	0.000E+00
IN123M	0.000E+00	0.000E+00	0.000E+00	0.000E+00	0.000E+00	0.000E+00	0.000E+00	0.000E+00	0.000E+00	0.000E+00	0.000E+00	0.000E+00
SN123	0.000E+00	0.000E+00	0.000E+00	0.000E+00	0.000E+00	0.000E+00	0.000E+00	0.000E+00	0.000E+00	0.000E+00	0.000E+00	0.000E+00
SN123M	0.000E+00	0.000E+00	0.000E+00	0.000E+00	0.000E+00	0.000E+00	0.000E+00	0.000E+00	0.000E+00	0.000E+00	0.000E+00	0.000E+00
SB123	0.000E+00	0.000E+00	0.000E+00	0.000E+00	0.000E+00	0.000E+00	0.000E+00	0.000E+00	0.000E+00	0.000E+00	0.000E+00	0.000E+00
TE123	0.000E+00	0.000E+00	0.000E+00	0.000E+00	0.000E+00	0.000E+00	0.000E+00	0.000E+00	0.000E+00	0.000E+00	0.000E+00	0.000E+00
TE123M	0.000E+00	0.000E+00	0.000E+00	0.000E+00	0.000E+00	0.000E+00	0.000E+00	0.000E+00	0.000E+00	0.000E+00	0.000E+00	0.000E+00
PD124	0.000E+00	0.000E+00	0.000E+00	0.000E+00	0.000E+00	0.000E+00	0.000E+00	0.000E+00	0.000E+00	0.000E+00	0.000E+00	0.000E+00
AG124	0.000E+00	0.000E+00	0.000E+00	0.000E+00	0.000E+00	0.000E+00	0.000E+00	0.000E+00	0.000E+00	0.000E+00	0.000E+00	0.000E+00
CD124	0.000E+00	0.000E+00	0.000E+00	0.000E+00	0.000E+00	0.000E+00	0.000E+00	0.000E+00	0.000E+00	0.000E+00	0.000E+00	0.000E+00
IN124	0.000E+00	0.000E+00	0.000E+00	0.000E+00	0.000E+00	0.000E+00	0.000E+00	0.000E+00	0.000E+00	0.000E+00	0.000E+00	0.000E+00
SN124	0.000E+00	0.000E+00	0.000E+00	0.000E+00	0.000E+00	0.000E+00	0.000E+00	0.000E+00	0.000E+00	0.000E+00	0.000E+00	0.000E+00
SB124	0.000E+00	0.000E+00	0.000E+00	0.000E+00	0.000E+00	0.000E+00	0.000E+00	0.000E+00	0.000E+00	0.000E+00	0.000E+00	0.000E+00
SB124M	0.000E+00	0.000E+00	0.000E+00	0.000E+00	0.000E+00	0.000E+00	0.000E+00	0.000E+00	0.000E+00	0.000E+00	0.000E+00	0.000E+00
TE124	0.000E+00	0.000E+00	0.000E+00	0.000E+00	0.000E+00	0.000E+00	0.000E+00	0.000E+00	0.000E+00	0.000E+00	0.000E+00	0.000E+00
PD125	0.000E+00	0.000E+00	0.000E+00	0.000E+00	0.000E+00	0.000E+00	0.000E+00	0.000E+00	0.000E+00	0.000E+00	0.000E+00	0.000E+00
AG125	0.000E+00	0.000E+00	0.000E+00	0.000E+00	0.000E+00	0.000E+00	0.000E+00	0.000E+00	0.000E+00	0.000E+00	0.000E+00	0.000E+00
CD125	0.000E+00	0.000E+00	0.000E+00	0.000E+00	0.000E+00	0.000E+00	0.000E+00	0.000E+00	0.000E+00	0.000E+00	0.000E+00	0.000E+00
IN125	0.000E+00	0.000E+00	0.000E+00	0.000E+00	0.000E+00	0.000E+00	0.000E+00	0.000E+00	0.000E+00	0.000E+00	0.000E+00	0.000E+00
IN125M	0.000E+00	0.000E+00	0.000E+00	0.000E+00	0.000E+00	0.000E+00	0.000E+00	0.000E+00	0.000E+00	0.000E+00	0.000E+00	0.000E+00

1 OUTPUT UNIT = 11 PAGE 32

ORIGEN2 V2.1 (8-1-91), Run on 03/10/04 at 13:15:17

* Decay of containment activity on a per cc basis

\+ FISSION PRODUCTS

POWER= 1.00000E+00 MW, BURNUP= 1.00000E+00 MWD, FLUX= 1.00E+00 N/CM**2-SEC

0 7 NUCLIDE TABLE: RADIOACTIVITY, CURIES

	0 HR	1 HR	2 HR	4 HR	8 HR	12 HR	24 HR	48 HR	72 HR	96 HR	144 HR	288 HR
SN125	0.000E+00	0.000E+00	0.000E+00	0.000E+00	0.000E+00	0.000E+00	0.000E+00	0.000E+00	0.000E+00	0.000E+00	0.000E+00	0.000E+00
SN125M	0.000E+00	0.000E+00	0.000E+00	0.000E+00	0.000E+00	0.000E+00	0.000E+00	0.000E+00	0.000E+00	0.000E+00	0.000E+00	0.000E+00
SB125	0.000E+00	0.000E+00	0.000E+00	0.000E+00	0.000E+00	0.000E+00	0.000E+00	0.000E+00	0.000E+00	0.000E+00	0.000E+00	0.000E+00
TE125	0.000E+00	0.000E+00	0.000E+00	0.000E+00	0.000E+00	0.000E+00	0.000E+00	0.000E+00	0.000E+00	0.000E+00	0.000E+00	0.000E+00
TE125M	0.000E+00	0.000E+00	0.000E+00	0.000E+00	0.000E+00	0.000E+00	0.000E+00	0.000E+00	0.000E+00	0.000E+00	0.000E+00	0.000E+00
PD126	0.000E+00	0.000E+00	0.000E+00	0.000E+00	0.000E+00	0.000E+00	0.000E+00	0.000E+00	0.000E+00	0.000E+00	0.000E+00	0.000E+00
AG126	0.000E+00	0.000E+00	0.000E+00	0.000E+00	0.000E+00	0.000E+00	0.000E+00	0.000E+00	0.000E+00	0.000E+00	0.000E+00	0.000E+00
CD126	0.000E+00	0.000E+00	0.000E+00	0.000E+00	0.000E+00	0.000E+00	0.000E+00	0.000E+00	0.000E+00	0.000E+00	0.000E+00	0.000E+00
IN126	0.000E+00	0.000E+00	0.000E+00	0.000E+00	0.000E+00	0.000E+00	0.000E+00	0.000E+00	0.000E+00	0.000E+00	0.000E+00	0.000E+00
SN126	0.000E+00	0.000E+00	0.000E+00	0.000E+00	0.000E+00	0.000E+00	0.000E+00	0.000E+00	0.000E+00	0.000E+00	0.000E+00	0.000E+00
SB126	0.000E+00	0.000E+00	0.000E+00	0.000E+00	0.000E+00	0.000E+00	0.000E+00	0.000E+00	0.000E+00	0.000E+00	0.000E+00	0.000E+00
SB126M	0.000E+00	0.000E+00	0.000E+00	0.000E+00	0.000E+00	0.000E+00	0.000E+00	0.000E+00	0.000E+00	0.000E+00	0.000E+00	0.000E+00
TE126	0.000E+00	0.000E+00	0.000E+00	0.000E+00	0.000E+00	0.000E+00	0.000E+00	0.000E+00	0.000E+00	0.000E+00	0.000E+00	0.000E+00
AG127	0.000E+00	0.000E+00	0.000E+00	0.000E+00	0.000E+00	0.000E+00	0.000E+00	0.000E+00	0.000E+00	0.000E+00	0.000E+00	0.000E+00
XE126	0.000E+00	0.000E+00	0.000E+00	0.000E+00	0.000E+00	0.000E+00	0.000E+00	0.000E+00	0.000E+00	0.000E+00	0.000E+00	0.000E+00
CD127	0.000E+00	0.000E+00	0.000E+00	0.000E+00	0.000E+00	0.000E+00	0.000E+00	0.000E+00	0.000E+00	0.000E+00	0.000E+00	0.000E+00
IN127	0.000E+00	0.000E+00	0.000E+00	0.000E+00	0.000E+00	0.000E+00	0.000E+00	0.000E+00	0.000E+00	0.000E+00	0.000E+00	0.000E+00
IN127M	0.000E+00	0.000E+00	0.000E+00	0.000E+00	0.000E+00	0.000E+00	0.000E+00	0.000E+00	0.000E+00	0.000E+00	0.000E+00	0.000E+00
SN127	0.000E+00	0.000E+00	0.000E+00	0.000E+00	0.000E+00	0.000E+00	0.000E+00	0.000E+00	0.000E+00	0.000E+00	0.000E+00	0.000E+00
SN127M	0.000E+00	0.000E+00	0.000E+00	0.000E+00	0.000E+00	0.000E+00	0.000E+00	0.000E+00	0.000E+00	0.000E+00	0.000E+00	0.000E+00
SB127	0.000E+00	0.000E+00	0.000E+00	0.000E+00	0.000E+00	0.000E+00	0.000E+00	0.000E+00	0.000E+00	0.000E+00	0.000E+00	0.000E+00
TE127	0.000E+00	0.000E+00	0.000E+00	0.000E+00	0.000E+00	0.000E+00	0.000E+00	0.000E+00	0.000E+00	0.000E+00	0.000E+00	0.000E+00
TE127M	0.000E+00	0.000E+00	0.000E+00	0.000E+00	0.000E+00	0.000E+00	0.000E+00	0.000E+00	0.000E+00	0.000E+00	0.000E+00	0.000E+00
I127	0.000E+00	0.000E+00	0.000E+00	0.000E+00	0.000E+00	0.000E+00	0.000E+00	0.000E+00	0.000E+00	0.000E+00	0.000E+00	0.000E+00
XE127	0.000E+00	0.000E+00	0.000E+00	0.000E+00	0.000E+00	0.000E+00	0.000E+00	0.000E+00	0.000E+00	0.000E+00	0.000E+00	0.000E+00
AG128	0.000E+00	0.000E+00	0.000E+00	0.000E+00	0.000E+00	0.000E+00	0.000E+00	0.000E+00	0.000E+00	0.000E+00	0.000E+00	0.000E+00
CD128	0.000E+00	0.000E+00	0.000E+00	0.000E+00	0.000E+00	0.000E+00	0.000E+00	0.000E+00	0.000E+00	0.000E+00	0.000E+00	0.000E+00
IN128	0.000E+00	0.000E+00	0.000E+00	0.000E+00	0.000E+00	0.000E+00	0.000E+00	0.000E+00	0.000E+00	0.000E+00	0.000E+00	0.000E+00

SN128	0.000E+00	0.000E+00	0.000E+00	0.000E+00	0.000E+00	0.000E+00	0.000E+00	0.000E+00	0.000E+00	0.000E+00	0.000E+00	0.000E+00
SB128	0.000E+00	0.000E+00	0.000E+00	0.000E+00	0.000E+00	0.000E+00	0.000E+00	0.000E+00	0.000E+00	0.000E+00	0.000E+00	0.000E+00
SB128M	0.000E+00	0.000E+00	0.000E+00	0.000E+00	0.000E+00	0.000E+00	0.000E+00	0.000E+00	0.000E+00	0.000E+00	0.000E+00	0.000E+00
TE128	0.000E+00	0.000E+00	0.000E+00	0.000E+00	0.000E+00	0.000E+00	0.000E+00	0.000E+00	0.000E+00	0.000E+00	0.000E+00	0.000E+00
I128	0.000E+00	0.000E+00	0.000E+00	0.000E+00	0.000E+00	0.000E+00	0.000E+00	0.000E+00	0.000E+00	0.000E+00	0.000E+00	0.000E+00
XE128	0.000E+00	0.000E+00	0.000E+00	0.000E+00	0.000E+00	0.000E+00	0.000E+00	0.000E+00	0.000E+00	0.000E+00	0.000E+00	0.000E+00
CD129	0.000E+00	0.000E+00	0.000E+00	0.000E+00	0.000E+00	0.000E+00	0.000E+00	0.000E+00	0.000E+00	0.000E+00	0.000E+00	0.000E+00
IN129	0.000E+00	0.000E+00	0.000E+00	0.000E+00	0.000E+00	0.000E+00	0.000E+00	0.000E+00	0.000E+00	0.000E+00	0.000E+00	0.000E+00
SN129	0.000E+00	0.000E+00	0.000E+00	0.000E+00	0.000E+00	0.000E+00	0.000E+00	0.000E+00	0.000E+00	0.000E+00	0.000E+00	0.000E+00
SN129M	0.000E+00	0.000E+00	0.000E+00	0.000E+00	0.000E+00	0.000E+00	0.000E+00	0.000E+00	0.000E+00	0.000E+00	0.000E+00	0.000E+00
SB129	0.000E+00	0.000E+00	0.000E+00	0.000E+00	0.000E+00	0.000E+00	0.000E+00	0.000E+00	0.000E+00	0.000E+00	0.000E+00	0.000E+00
TE129	0.000E+00	0.000E+00	0.000E+00	0.000E+00	0.000E+00	0.000E+00	0.000E+00	0.000E+00	0.000E+00	0.000E+00	0.000E+00	0.000E+00
TE129M	0.000E+00	0.000E+00	0.000E+00	0.000E+00	0.000E+00	0.000E+00	0.000E+00	0.000E+00	0.000E+00	0.000E+00	0.000E+00	0.000E+00
I129	0.000E+00	0.000E+00	0.000E+00	0.000E+00	0.000E+00	0.000E+00	0.000E+00	0.000E+00	0.000E+00	0.000E+00	0.000E+00	0.000E+00
XE129	0.000E+00	0.000E+00	0.000E+00	0.000E+00	0.000E+00	0.000E+00	0.000E+00	0.000E+00	0.000E+00	0.000E+00	0.000E+00	0.000E+00
XE129M	0.000E+00	0.000E+00	0.000E+00	0.000E+00	0.000E+00	0.000E+00	0.000E+00	0.000E+00	0.000E+00	0.000E+00	0.000E+00	0.000E+00
CD130	0.000E+00	0.000E+00	0.000E+00	0.000E+00	0.000E+00	0.000E+00	0.000E+00	0.000E+00	0.000E+00	0.000E+00	0.000E+00	0.000E+00
IN130	0.000E+00	0.000E+00	0.000E+00	0.000E+00	0.000E+00	0.000E+00	0.000E+00	0.000E+00	0.000E+00	0.000E+00	0.000E+00	0.000E+00
SN130	0.000E+00	0.000E+00	0.000E+00	0.000E+00	0.000E+00	0.000E+00	0.000E+00	0.000E+00	0.000E+00	0.000E+00	0.000E+00	0.000E+00
SB130	0.000E+00	0.000E+00	0.000E+00	0.000E+00	0.000E+00	0.000E+00	0.000E+00	0.000E+00	0.000E+00	0.000E+00	0.000E+00	0.000E+00
SB130M	0.000E+00	0.000E+00	0.000E+00	0.000E+00	0.000E+00	0.000E+00	0.000E+00	0.000E+00	0.000E+00	0.000E+00	0.000E+00	0.000E+00
TE130	0.000E+00	0.000E+00	0.000E+00	0.000E+00	0.000E+00	0.000E+00	0.000E+00	0.000E+00	0.000E+00	0.000E+00	0.000E+00	0.000E+00
I130	0.000E+00	0.000E+00	0.000E+00	0.000E+00	0.000E+00	0.000E+00	0.000E+00	0.000E+00	0.000E+00	0.000E+00	0.000E+00	0.000E+00

1 OUTPUT UNIT = 11 PAGE 33

ORIGEN2 V2.1 (8-1-91), Run on 03/10/04 at 13:15:17

* Decay of containment activity on a per cc basis

\+ FISSION PRODUCTS

POWER= 1.00000E+00 MW, BURNUP= 1.00000E+00 MWD, FLUX= 1.00E+00 N/CM**2-SEC

0 7 NUCLIDE TABLE: RADIOACTIVITY, CURIES .

	0 HR	1 HR	2 HR	4 HR	8 HR	12 HR	24 HR	48 HR	72 HR	96 HR	144 HR	288 HR
I130M	0.000E+00	0.000E+00	0.000E+00	0.000E+00	0.000E+00	0.000E+00	0.000E+00	0.000E+00	0.000E+00	0.000E+00	0.000E+00	0.000E+00
XE130	0.000E+00	0.000E+00	0.000E+00	0.000E+00	0.000E+00	0.000E+00	0.000E+00	0.000E+00	0.000E+00	0.000E+00	0.000E+00	0.000E+00
CD131	0.000E+00	0.000E+00	0.000E+00	0.000E+00	0.000E+00	0.000E+00	0.000E+00	0.000E+00	0.000E+00	0.000E+00	0.000E+00	0.000E+00
IN131	0.000E+00	0.000E+00	0.000E+00	0.000E+00	0.000E+00	0.000E+00	0.000E+00	0.000E+00	0.000E+00	0.000E+00	0.000E+00	0.000E+00
SN131	0.000E+00	0.000E+00	0.000E+00	0.000E+00	0.000E+00	0.000E+00	0.000E+00	0.000E+00	0.000E+00	0.000E+00	0.000E+00	0.000E+00
SB131	0.000E+00	0.000E+00	0.000E+00	0.000E+00	0.000E+00	0.000E+00	0.000E+00	0.000E+00	0.000E+00	0.000E+00	0.000E+00	0.000E+00
TE131	0.000E+00	0.000E+00	0.000E+00	0.000E+00	0.000E+00	0.000E+00	0.000E+00	0.000E+00	0.000E+00	0.000E+00	0.000E+00	0.000E+00
TE131M	0.000E+00	0.000E+00	0.000E+00	0.000E+00	0.000E+00	0.000E+00	0.000E+00	0.000E+00	0.000E+00	0.000E+00	0.000E+00	0.000E+00
I131	3.349E-04	3.337E-04	3.325E-04	3.301E-04	3.254E-04	3.207E-04	3.072E-04	2.818E-04	2.585E-04	2.372E-04	1.996E-04	1.190E-04
XE131	0.000E+00	0.000E+00	0.000E+00	0.000E+00	0.000E+00	0.000E+00	0.000E+00	0.000E+00	0.000E+00	0.000E+00	0.000E+00	0.000E+00
XE131M	2.238E-06	2.241E-06	2.245E-06	2.252E-06	2.265E-06	2.278E-06	2.313E-06	2.366E-06	2.402E-06	2.422E-06	2.421E-06	2.209E-06
CD132	0.000E+00	0.000E+00	0.000E+00	0.000E+00	0.000E+00	0.000E+00	0.000E+00	0.000E+00	0.000E+00	0.000E+00	0.000E+00	0.000E+00
IN132	0.000E+00	0.000E+00	0.000E+00	0.000E+00	0.000E+00	0.000E+00	0.000E+00	0.000E+00	0.000E+00	0.000E+00	0.000E+00	0.000E+00
SN132	0.000E+00	0.000E+00	0.000E+00	0.000E+00	0.000E+00	0.000E+00	0.000E+00	0.000E+00	0.000E+00	0.000E+00	0.000E+00	0.000E+00
SB132	0.000E+00	0.000E+00	0.000E+00	0.000E+00	0.000E+00	0.000E+00	0.000E+00	0.000E+00	0.000E+00	0.000E+00	0.000E+00	0.000E+00
SB132M	0.000E+00	0.000E+00	0.000E+00	0.000E+00	0.000E+00	0.000E+00	0.000E+00	0.000E+00	0.000E+00	0.000E+00	0.000E+00	0.000E+00
TE132	0.000E+00	0.000E+00	0.000E+00	0.000E+00	0.000E+00	0.000E+00	0.000E+00	0.000E+00	0.000E+00	0.000E+00	0.000E+00	0.000E+00
I132	3.015E-04	2.231E-04	1.650E-04	9.033E-05	2.706E-05	8.105E-06	2.178E-07	1.574E-10	1.137E-13	8.215E-17	4.288E-23	0.000E+00
XE132	0.000E+00	0.000E+00	0.000E+00	0.000E+00	0.000E+00	0.000E+00	0.000E+00	0.000E+00	0.000E+00	0.000E+00	0.000E+00	0.000E+00
CS132	0.000E+00	0.000E+00	0.000E+00	0.000E+00	0.000E+00	0.000E+00	0.000E+00	0.000E+00	0.000E+00	0.000E+00	0.000E+00	0.000E+00
BA132	0.000E+00	0.000E+00	0.000E+00	0.000E+00	0.000E+00	0.000E+00	0.000E+00	0.000E+00	0.000E+00	0.000E+00	0.000E+00	0.000E+00
IN133	0.000E+00	0.000E+00	0.000E+00	0.000E+00	0.000E+00	0.000E+00	0.000E+00	0.000E+00	0.000E+00	0.000E+00	0.000E+00	0.000E+00
SN133	0.000E+00	0.000E+00	0.000E+00	0.000E+00	0.000E+00	0.000E+00	0.000E+00	0.000E+00	0.000E+00	0.000E+00	0.000E+00	0.000E+00
SB133	0.000E+00	0.000E+00	0.000E+00	0.000E+00	0.000E+00	0.000E+00	0.000E+00	0.000E+00	0.000E+00	0.000E+00	0.000E+00	0.000E+00
TE133	0.000E+00	0.000E+00	0.000E+00	0.000E+00	0.000E+00	0.000E+00	0.000E+00	0.000E+00	0.000E+00	0.000E+00	0.000E+00	0.000E+00
TE133M	0.000E+00	0.000E+00	0.000E+00	0.000E+00	0.000E+00	0.000E+00	0.000E+00	0.000E+00	0.000E+00	0.000E+00	0.000E+00	0.000E+00

I133	4.273E-04	4.132E-04	3.997E-04	3.739E-04	3.273E-04	2.864E-04	1.920E-04	8.630E-05	3.878E-05	1.743E-05	3.521E-06	2.901E-08
I133M	0.000E+00	0.000E+00	0.000E+00	0.000E+00	0.000E+00	0.000E+00	0.000E+00	0.000E+00	0.000E+00	0.000E+00	0.000E+00	0.000E+00
XE133	4.232E-04	4.232E-04	4.231E-04	4.227E-04	4.212E-04	4.188E-04	4.074E-04	3.741E-04	3.359E-04	2.983E-04	2.319E-04	1.059E-04
XE133M	1.328E-05	1.326E-05	1.324E-05	1.319E-05	1.303E-05	1.281E-05	1.193E-05	9.703E-06	7.525E-06	5.688E-06	3.128E-06	4.777E-07
CS133	0.000E+00	0.000E+00	0.000E+00	0.000E+00	0.000E+00	0.000E+00	0.000E+00	0.000E+00	0.000E+00	0.000E+00	0.000E+00	0.000E+00
BA133	0.000E+00	0.000E+00	0.000E+00	0.000E+00	0.000E+00	0.000E+00	0.000E+00	0.000E+00	0.000E+00	0.000E+00	0.000E+00	0.000E+00
IN134	0.000E+00	0.000E+00	0.000E+00	0.000E+00	0.000E+00	0.000E+00	0.000E+00	0.000E+00	0.000E+00	0.000E+00	0.000E+00	0.000E+00
SN134	0.000E+00	0.000E+00	0.000E+00	0.000E+00	0.000E+00	0.000E+00	0.000E+00	0.000E+00	0.000E+00	0.000E+00	0.000E+00	0.000E+00
SB134	0.000E+00	0.000E+00	0.000E+00	0.000E+00	0.000E+00	0.000E+00	0.000E+00	0.000E+00	0.000E+00	0.000E+00	0.000E+00	0.000E+00
SB134M	0.000E+00	0.000E+00	0.000E+00	0.000E+00	0.000E+00	0.000E+00	0.000E+00	0.000E+00	0.000E+00	0.000E+00	0.000E+00	0.000E+00
TE134	0.000E+00	0.000E+00	0.000E+00	0.000E+00	0.000E+00	0.000E+00	0.000E+00	0.000E+00	0.000E+00	0.000E+00	0.000E+00	0.000E+00
I134	4.724E-04	2.142E-04	9.717E-05	1.999E-05	8.458E-07	3.579E-08	2.711E-12	1.556E-20	8.931E-29	0.000E+00	0.000E+00	0.000E+00
I134M	0.000E+00	0.000E+00	0.000E+00	0.000E+00	0.000E+00	0.000E+00	0.000E+00	0.000E+00	0.000E+00	0.000E+00	0.000E+00	0.000E+00
XE134	0.000E+00	0.000E+00	0.000E+00	0.000E+00	0.000E+00	0.000E+00	0.000E+00	0.000E+00	0.000E+00	0.000E+00	0.000E+00	0.000E+00
XE134M	0.000E+00	0.000E+00	0.000E+00	0.000E+00	0.000E+00	0.000E+00	0.000E+00	0.000E+00	0.000E+00	0.000E+00	0.000E+00	0.000E+00
CS134	1.033E-04	1.033E-04	1.033E-04	1.033E-04	1.033E-04	1.032E-04	1.032E-04	1.031E-04	1.030E-04	1.029E-04	1.027E-04	1.022E-04
CS134M	0.000E+00	0.000E+00	0.000E+00	0.000E+00	0.000E+00	0.000E+00	0.000E+00	0.000E+00	0.000E+00	0.000E+00	0.000E+00	0.000E+00
BA134	0.000E+00	0.000E+00	0.000E+00	0.000E+00	0.000E+00	0.000E+00	0.000E+00	0.000E+00	0.000E+00	0.000E+00	0.000E+00	0.000E+00
SN135	0.000E+00	0.000E+00	0.000E+00	0.000E+00	0.000E+00	0.000E+00	0.000E+00	0.000E+00	0.000E+00	0.000E+00	0.000E+00	0.000E+00
SB135	0.000E+00	0.000E+00	0.000E+00	0.000E+00	0.000E+00	0.000E+00	0.000E+00	0.000E+00	0.000E+00	0.000E+00	0.000E+00	0.000E+00
TE135	0.000E+00	0.000E+00	0.000E+00	0.000E+00	0.000E+00	0.000E+00	0.000E+00	0.000E+00	0.000E+00	0.000E+00	0.000E+00	0.000E+00
I135	4.005E-04	3.606E-04	3.247E-04	2.633E-04	1.731E-04	1.138E-04	3.234E-05	2.612E-06	2.109E-07	1.703E-08	1.111E-10	3.082E-17
XE135	1.091E-04	1.297E-04	1.454E-04	1.665E-04	1.789E-04	1.688E-04	1.030E-04	2.341E-05	4.310E-06	7.361E-07	1.980E-08	3.418E-13
XE135M	8.393E-05	5.906E-05	5.209E-05	4.217E-05	2.773E-05	1.823E-05	5.180E-06	4.183E-07	3.378E-08	2.728E-09	1.779E-11	4.936E-18
CS135	0.000E+00	4.121E-15	8.862E-15	1.966E-14	4.383E-14	6.796E-14	1.245E-13	1.702E-13	1.796E-13	1.813E-13	1.816E-13	1.816E-13

1 OUTPUT UNIT = 11 PAGE 34

ORIGEN2 V2.1 (8-1-91), Run on 03/10/04 at 13:15:17

* Decay of containment activity on a per cc basis

\+ FISSION PRODUCTS

POWER= 1.00000E+00 MW, BURNUP= 1.00000E+00 MWD, FLUX= 1.00E+00 N/CM**2-SEC

0 7 NUCLIDE TABLE: RADIOACTIVITY, CURIES

	0 HR	1 HR	2 HR	4 HR	8 HR	12 HR	24 HR	48 HR	72 HR	96 HR	144 HR	288 HR
CS135M	0.000E+00	0.000E+00	0.000E+00	0.000E+00	0.000E+00	0.000E+00	0.000E+00	0.000E+00	0.000E+00	0.000E+00	0.000E+00	0.000E+00
BA135	0.000E+00	0.000E+00	0.000E+00	0.000E+00	0.000E+00	0.000E+00	0.000E+00	0.000E+00	0.000E+00	0.000E+00	0.000E+00	0.000E+00
BA135M	0.000E+00	0.000E+00	0.000E+00	0.000E+00	0.000E+00	0.000E+00	0.000E+00	0.000E+00	0.000E+00	0.000E+00	0.000E+00	0.000E+00
SN136	0.000E+00	0.000E+00	0.000E+00	0.000E+00	0.000E+00	0.000E+00	0.000E+00	0.000E+00	0.000E+00	0.000E+00	0.000E+00	0.000E+00
SB136	0.000E+00	0.000E+00	0.000E+00	0.000E+00	0.000E+00	0.000E+00	0.000E+00	0.000E+00	0.000E+00	0.000E+00	0.000E+00	0.000E+00
TE136	0.000E+00	0.000E+00	0.000E+00	0.000E+00	0.000E+00	0.000E+00	0.000E+00	0.000E+00	0.000E+00	0.000E+00	0.000E+00	0.000E+00
I136	0.000E+00	0.000E+00	0.000E+00	0.000E+00	0.000E+00	0.000E+00	0.000E+00	0.000E+00	0.000E+00	0.000E+00	0.000E+00	0.000E+00
I136M	0.000E+00	0.000E+00	0.000E+00	0.000E+00	0.000E+00	0.000E+00	0.000E+00	0.000E+00	0.000E+00	0.000E+00	0.000E+00	0.000E+00
XE136	0.000E+00	0.000E+00	0.000E+00	0.000E+00	0.000E+00	0.000E+00	0.000E+00	0.000E+00	0.000E+00	0.000E+00	0.000E+00	0.000E+00
CS136	2.581E-05	2.575E-05	2.569E-05	2.558E-05	2.535E-05	2.513E-05	2.448E-05	2.321E-05	2.202E-05	2.088E-05	1.879E-05	1.368E-05
BA136	0.000E+00	0.000E+00	0.000E+00	0.000E+00	0.000E+00	0.000E+00	0.000E+00	0.000E+00	0.000E+00	0.000E+00	0.000E+00	0.000E+00
BA136M	0.000E+00	4.243E-06	4.234E-06	4.215E-06	4.178E-06	4.142E-06	4.034E-06	3.826E-06	3.629E-06	3.442E-06	3.096E-06	2.254E-06
SB137	0.000E+00	0.000E+00	0.000E+00	0.000E+00	0.000E+00	0.000E+00	0.000E+00	0.000E+00	0.000E+00	0.000E+00	0.000E+00	0.000E+00
TE137	0.000E+00	0.000E+00	0.000E+00	0.000E+00	0.000E+00	0.000E+00	0.000E+00	0.000E+00	0.000E+00	0.000E+00	0.000E+00	0.000E+00
I137	0.000E+00	0.000E+00	0.000E+00	0.000E+00	0.000E+00	0.000E+00	0.000E+00	0.000E+00	0.000E+00	0.000E+00	0.000E+00	0.000E+00
XE137	0.000E+00	0.000E+00	0.000E+00	0.000E+00	0.000E+00	0.000E+00	0.000E+00	0.000E+00	0.000E+00	0.000E+00	0.000E+00	0.000E+00
CS137	6.622E-05	6.622E-05	6.622E-05	6.622E-05	6.622E-05	6.622E-05	6.622E-05	6.622E-05	6.621E-05	6.621E-05	6.620E-05	6.617E-05
BA137	0.000E+00	0.000E+00	0.000E+00	0.000E+00	0.000E+00	0.000E+00	0.000E+00	0.000E+00	0.000E+00	0.000E+00	0.000E+00	0.000E+00
BA137M	0.000E+00	6.265E-05	6.265E-05	6.265E-05	6.265E-05	6.265E-05	6.264E-05	6.264E-05	6.264E-05	6.263E-05	6.262E-05	6.260E-05
SB138	0.000E+00	0.000E+00	0.000E+00	0.000E+00	0.000E+00	0.000E+00	0.000E+00	0.000E+00	0.000E+00	0.000E+00	0.000E+00	0.000E+00
TE138	0.000E+00	0.000E+00	0.000E+00	0.000E+00	0.000E+00	0.000E+00	0.000E+00	0.000E+00	0.000E+00	0.000E+00	0.000E+00	0.000E+00
I138	0.000E+00	0.000E+00	0.000E+00	0.000E+00	0.000E+00	0.000E+00	0.000E+00	0.000E+00	0.000E+00	0.000E+00	0.000E+00	0.000E+00
XE138	3.530E-04	1.876E-05	9.966E-07	2.815E-09	2.243E-14	1.787E-19	9.301E-35	0.000E+00	0.000E+00	0.000E+00	0.000E+00	0.000E+00
CS138	0.000E+00	6.151E-05	2.017E-05	1.581E-06	9.033E-09	5.155E-11	9.575E-18	3.303E-31	0.000E+00	0.000E+00	0.000E+00	0.000E+00

CS138M	0.000E+00	0.000E+00	0.000E+00	0.000E+00	0.000E+00	0.000E+00	0.000E+00	0.000E+00	0.000E+00	0.000E+00	0.000E+00	0.000E+00
BA138	0.000E+00	0.000E+00	0.000E+00	0.000E+00	0.000E+00	0.000E+00	0.000E+00	0.000E+00	0.000E+00	0.000E+00	0.000E+00	0.000E+00
LA138	0.000E+00	0.000E+00	0.000E+00	0.000E+00	0.000E+00	0.000E+00	0.000E+00	0.000E+00	0.000E+00	0.000E+00	0.000E+00	0.000E+00
SB139	0.000E+00	0.000E+00	0.000E+00	0.000E+00	0.000E+00	0.000E+00	0.000E+00	0.000E+00	0.000E+00	0.000E+00	0.000E+00	0.000E+00
TE139	0.000E+00	0.000E+00	0.000E+00	0.000E+00	0.000E+00	0.000E+00	0.000E+00	0.000E+00	0.000E+00	0.000E+00	0.000E+00	0.000E+00
I139	0.000E+00	0.000E+00	0.000E+00	0.000E+00	0.000E+00	0.000E+00	0.000E+00	0.000E+00	0.000E+00	0.000E+00	0.000E+00	0.000E+00
XE139	0.000E+00	0.000E+00	0.000E+00	0.000E+00	0.000E+00	0.000E+00	0.000E+00	0.000E+00	0.000E+00	0.000E+00	0.000E+00	0.000E+00
CS139	0.000E+00	0.000E+00	0.000E+00	0.000E+00	0.000E+00	0.000E+00	0.000E+00	0.000E+00	0.000E+00	0.000E+00	0.000E+00	0.000E+00
BA139	0.000E+00	0.000E+00	0.000E+00	0.000E+00	0.000E+00	0.000E+00	0.000E+00	0.000E+00	0.000E+00	0.000E+00	0.000E+00	0.000E+00
LA139	0.000E+00	0.000E+00	0.000E+00	0.000E+00	0.000E+00	0.000E+00	0.000E+00	0.000E+00	0.000E+00	0.000E+00	0.000E+00	0.000E+00
CE139	0.000E+00	0.000E+00	0.000E+00	0.000E+00	0.000E+00	0.000E+00	0.000E+00	0.000E+00	0.000E+00	0.000E+00	0.000E+00	0.000E+00
PR139	0.000E+00	0.000E+00	0.000E+00	0.000E+00	0.000E+00	0.000E+00	0.000E+00	0.000E+00	0.000E+00	0.000E+00	0.000E+00	0.000E+00
TE140	0.000E+00	0.000E+00	0.000E+00	0.000E+00	0.000E+00	0.000E+00	0.000E+00	0.000E+00	0.000E+00	0.000E+00	0.000E+00	0.000E+00
I140	0.000E+00	0.000E+00	0.000E+00	0.000E+00	0.000E+00	0.000E+00	0.000E+00	0.000E+00	0.000E+00	0.000E+00	0.000E+00	0.000E+00
XE140	0.000E+00	0.000E+00	0.000E+00	0.000E+00	0.000E+00	0.000E+00	0.000E+00	0.000E+00	0.000E+00	0.000E+00	0.000E+00	0.000E+00
CS140	0.000E+00	0.000E+00	0.000E+00	0.000E+00	0.000E+00	0.000E+00	0.000E+00	0.000E+00	0.000E+00	0.000E+00	0.000E+00	0.000E+00
BA140	0.000E+00	0.000E+00	0.000E+00	0.000E+00	0.000E+00	0.000E+00	0.000E+00	0.000E+00	0.000E+00	0.000E+00	0.000E+00	0.000E+00
LA140	0.000E+00	0.000E+00	0.000E+00	0.000E+00	0.000E+00	0.000E+00	0.000E+00	0.000E+00	0.000E+00	0.000E+00	0.000E+00	0.000E+00
CE140	0.000E+00	0.000E+00	0.000E+00	0.000E+00	0.000E+00	0.000E+00	0.000E+00	0.000E+00	0.000E+00	0.000E+00	0.000E+00	0.000E+00
PR140	0.000E+00	0.000E+00	0.000E+00	0.000E+00	0.000E+00	0.000E+00	0.000E+00	0.000E+00	0.000E+00	0.000E+00	0.000E+00	0.000E+00
TE141	0.000E+00	0.000E+00	0.000E+00	0.000E+00	0.000E+00	0.000E+00	0.000E+00	0.000E+00	0.000E+00	0.000E+00	0.000E+00	0.000E+00
I141	0.000E+00	0.000E+00	0.000E+00	0.000E+00	0.000E+00	0.000E+00	0.000E+00	0.000E+00	0.000E+00	0.000E+00	0.000E+00	0.000E+00
XE141	0.000E+00	0.000E+00	0.000E+00	0.000E+00	0.000E+00	0.000E+00	0.000E+00	0.000E+00	0.000E+00	0.000E+00	0.000E+00	0.000E+00
CS141	0.000E+00	0.000E+00	0.000E+00	0.000E+00	0.000E+00	0.000E+00	0.000E+00	0.000E+00	0.000E+00	0.000E+00	0.000E+00	0.000E+00
BA141	0.000E+00	0.000E+00	0.000E+00	0.000E+00	0.000E+00	0.000E+00	0.000E+00	0.000E+00	0.000E+00	0.000E+00	0.000E+00	0.000E+00
LA141	0.000E+00	0.000E+00	0.000E+00	0.000E+00	0.000E+00	0.000E+00	0.000E+00	0.000E+00	0.000E+00	0.000E+00	0.000E+00	0.000E+00
CE141	0.000E+00	0.000E+00	0.000E+00	0.000E+00	0.000E+00	0.000E+00	0.000E+00	0.000E+00	0.000E+00	0.000E+00	0.000E+00	0.000E+00

1 OUTPUT UNIT = 11 PAGE 35

ORIGEN2 V2.1 (8-1-91), Run on 03/10/04 at 13:15:17

* Decay of containment activity on a per cc basis

\+ FISSION PRODUCTS

POWER= 1.00000E+00 MW, BURNUP= 1.00000E+00 MWD, FLUX= 1.00E+00 N/CM**2-SEC

0 7 NUCLIDE TABLE: RADIOACTIVITY, CURIES

	0 HR	1 HR	2 HR	4 HR	8 HR	12 HR	24 HR	48 HR	72 HR	96 HR	144 HR	288 HR
PR141	0.000E+00	0.000E+00	0.000E+00	0.000E+00	0.000E+00	0.000E+00	0.000E+00	0.000E+00	0.000E+00	0.000E+00	0.000E+00	0.000E+00
ND141	0.000E+00	0.000E+00	0.000E+00	0.000E+00	0.000E+00	0.000E+00	0.000E+00	0.000E+00	0.000E+00	0.000E+00	0.000E+00	0.000E+00
TE142	0.000E+00	0.000E+00	0.000E+00	0.000E+00	0.000E+00	0.000E+00	0.000E+00	0.000E+00	0.000E+00	0.000E+00	0.000E+00	0.000E+00
I142	0.000E+00	0.000E+00	0.000E+00	0.000E+00	0.000E+00	0.000E+00	0.000E+00	0.000E+00	0.000E+00	0.000E+00	0.000E+00	0.000E+00
XE142	0.000E+00	0.000E+00	0.000E+00	0.000E+00	0.000E+00	0.000E+00	0.000E+00	0.000E+00	0.000E+00	0.000E+00	0.000E+00	0.000E+00
CS142	0.000E+00	0.000E+00	0.000E+00	0.000E+00	0.000E+00	0.000E+00	0.000E+00	0.000E+00	0.000E+00	0.000E+00	0.000E+00	0.000E+00
BA142	0.000E+00	0.000E+00	0.000E+00	0.000E+00	0.000E+00	0.000E+00	0.000E+00	0.000E+00	0.000E+00	0.000E+00	0.000E+00	0.000E+00
LA142	0.000E+00	0.000E+00	0.000E+00	0.000E+00	0.000E+00	0.000E+00	0.000E+00	0.000E+00	0.000E+00	0.000E+00	0.000E+00	0.000E+00
CE142	0.000E+00	0.000E+00	0.000E+00	0.000E+00	0.000E+00	0.000E+00	0.000E+00	0.000E+00	0.000E+00	0.000E+00	0.000E+00	0.000E+00
PR142	0.000E+00	0.000E+00	0.000E+00	0.000E+00	0.000E+00	0.000E+00	0.000E+00	0.000E+00	0.000E+00	0.000E+00	0.000E+00	0.000E+00
PR142M	0.000E+00	0.000E+00	0.000E+00	0.000E+00	0.000E+00	0.000E+00	0.000E+00	0.000E+00	0.000E+00	0.000E+00	0.000E+00	0.000E+00
ND142	0.000E+00	0.000E+00	0.000E+00	0.000E+00	0.000E+00	0.000E+00	0.000E+00	0.000E+00	0.000E+00	0.000E+00	0.000E+00	0.000E+00
I143	0.000E+00	0.000E+00	0.000E+00	0.000E+00	0.000E+00	0.000E+00	0.000E+00	0.000E+00	0.000E+00	0.000E+00	0.000E+00	0.000E+00
XE143	0.000E+00	0.000E+00	0.000E+00	0.000E+00	0.000E+00	0.000E+00	0.000E+00	0.000E+00	0.000E+00	0.000E+00	0.000E+00	0.000E+00
CS143	0.000E+00	0.000E+00	0.000E+00	0.000E+00	0.000E+00	0.000E+00	0.000E+00	0.000E+00	0.000E+00	0.000E+00	0.000E+00	0.000E+00
BA143	0.000E+00	0.000E+00	0.000E+00	0.000E+00	0.000E+00	0.000E+00	0.000E+00	0.000E+00	0.000E+00	0.000E+00	0.000E+00	0.000E+00
LA143	0.000E+00	0.000E+00	0.000E+00	0.000E+00	0.000E+00	0.000E+00	0.000E+00	0.000E+00	0.000E+00	0.000E+00	0.000E+00	0.000E+00
CE143	0.000E+00	0.000E+00	0.000E+00	0.000E+00	0.000E+00	0.000E+00	0.000E+00	0.000E+00	0.000E+00	0.000E+00	0.000E+00	0.000E+00
PR143	0.000E+00	0.000E+00	0.000E+00	0.000E+00	0.000E+00	0.000E+00	0.000E+00	0.000E+00	0.000E+00	0.000E+00	0.000E+00	0.000E+00
ND143	0.000E+00	0.000E+00	0.000E+00	0.000E+00	0.000E+00	0.000E+00	0.000E+00	0.000E+00	0.000E+00	0.000E+00	0.000E+00	0.000E+00
I144	0.000E+00	0.000E+00	0.000E+00	0.000E+00	0.000E+00	0.000E+00	0.000E+00	0.000E+00	0.000E+00	0.000E+00	0.000E+00	0.000E+00
XE144	0.000E+00	0.000E+00	0.000E+00	0.000E+00	0.000E+00	0.000E+00	0.000E+00	0.000E+00	0.000E+00	0.000E+00	0.000E+00	0.000E+00

CS144	0.000E+00	0.000E+00	0.000E+00	0.000E+00	0.000E+00	0.000E+00	0.000E+00	0.000E+00	0.000E+00	0.000E+00	0.000E+00	0.000E+00
BA144	0.000E+00	0.000E+00	0.000E+00	0.000E+00	0.000E+00	0.000E+00	0.000E+00	0.000E+00	0.000E+00	0.000E+00	0.000E+00	0.000E+00
LA144	0.000E+00	0.000E+00	0.000E+00	0.000E+00	0.000E+00	0.000E+00	0.000E+00	0.000E+00	0.000E+00	0.000E+00	0.000E+00	0.000E+00
CE144	0.000E+00	0.000E+00	0.000E+00	0.000E+00	0.000E+00	0.000E+00	0.000E+00	0.000E+00	0.000E+00	0.000E+00	0.000E+00	0.000E+00
PR144	0.000E+00	0.000E+00	0.000E+00	0.000E+00	0.000E+00	0.000E+00	0.000E+00	0.000E+00	0.000E+00	0.000E+00	0.000E+00	0.000E+00
PR144M	0.000E+00	0.000E+00	0.000E+00	0.000E+00	0.000E+00	0.000E+00	0.000E+00	0.000E+00	0.000E+00	0.000E+00	0.000E+00	0.000E+00
ND144	0.000E+00	0.000E+00	0.000E+00	0.000E+00	0.000E+00	0.000E+00	0.000E+00	0.000E+00	0.000E+00	0.000E+00	0.000E+00	0.000E+00
I145	0.000E+00	0.000E+00	0.000E+00	0.000E+00	0.000E+00	0.000E+00	0.000E+00	0.000E+00	0.000E+00	0.000E+00	0.000E+00	0.000E+00
XE145	0.000E+00	0.000E+00	0.000E+00	0.000E+00	0.000E+00	0.000E+00	0.000E+00	0.000E+00	0.000E+00	0.000E+00	0.000E+00	0.000E+00
CS145	0.000E+00	0.000E+00	0.000E+00	0.000E+00	0.000E+00	0.000E+00	0.000E+00	0.000E+00	0.000E+00	0.000E+00	0.000E+00	0.000E+00
BA145	0.000E+00	0.000E+00	0.000E+00	0.000E+00	0.000E+00	0.000E+00	0.000E+00	0.000E+00	0.000E+00	0.000E+00	0.000E+00	0.000E+00
LA145	0.000E+00	0.000E+00	0.000E+00	0.000E+00	0.000E+00	0.000E+00	0.000E+00	0.000E+00	0.000E+00	0.000E+00	0.000E+00	0.000E+00
CE145	0.000E+00	0.000E+00	0.000E+00	0.000E+00	0.000E+00	0.000E+00	0.000E+00	0.000E+00	0.000E+00	0.000E+00	0.000E+00	0.000E+00
PR145	0.000E+00	0.000E+00	0.000E+00	0.000E+00	0.000E+00	0.000E+00	0.000E+00	0.000E+00	0.000E+00	0.000E+00	0.000E+00	0.000E+00
ND145	0.000E+00	0.000E+00	0.000E+00	0.000E+00	0.000E+00	0.000E+00	0.000E+00	0.000E+00	0.000E+00	0.000E+00	0.000E+00	0.000E+00
PM145	0.000E+00	0.000E+00	0.000E+00	0.000E+00	0.000E+00	0.000E+00	0.000E+00	0.000E+00	0.000E+00	0.000E+00	0.000E+00	0.000E+00
SM145	0.000E+00	0.000E+00	0.000E+00	0.000E+00	0.000E+00	0.000E+00	0.000E+00	0.000E+00	0.000E+00	0.000E+00	0.000E+00	0.000E+00
XE146	0.000E+00	0.000E+00	0.000E+00	0.000E+00	0.000E+00	0.000E+00	0.000E+00	0.000E+00	0.000E+00	0.000E+00	0.000E+00	0.000E+00
CS146	0.000E+00	0.000E+00	0.000E+00	0.000E+00	0.000E+00	0.000E+00	0.000E+00	0.000E+00	0.000E+00	0.000E+00	0.000E+00	0.000E+00
BA146	0.000E+00	0.000E+00	0.000E+00	0.000E+00	0.000E+00	0.000E+00	0.000E+00	0.000E+00	0.000E+00	0.000E+00	0.000E+00	0.000E+00
LA146	0.000E+00	0.000E+00	0.000E+00	0.000E+00	0.000E+00	0.000E+00	0.000E+00	0.000E+00	0.000E+00	0.000E+00	0.000E+00	0.000E+00
CE146	0.000E+00	0.000E+00	0.000E+00	0.000E+00	0.000E+00	0.000E+00	0.000E+00	0.000E+00	0.000E+00	0.000E+00	0.000E+00	0.000E+00
PR146	0.000E+00	0.000E+00	0.000E+00	0.000E+00	0.000E+00	0.000E+00	0.000E+00	0.000E+00	0.000E+00	0.000E+00	0.000E+00	0.000E+00
ND146	0.000E+00	0.000E+00	0.000E+00	0.000E+00	0.000E+00	0.000E+00	0.000E+00	0.000E+00	0.000E+00	0.000E+00	0.000E+00	0.000E+00
PM146	0.000E+00	0.000E+00	0.000E+00	0.000E+00	0.000E+00	0.000E+00	0.000E+00	0.000E+00	0.000E+00	0.000E+00	0.000E+00	0.000E+00
SM146	0.000E+00	0.000E+00	0.000E+00	0.000E+00	0.000E+00	0.000E+00	0.000E+00	0.000E+00	0.000E+00	0.000E+00	0.000E+00	0.000E+00
XE147	0.000E+00	0.000E+00	0.000E+00	0.000E+00	0.000E+00	0.000E+00	0.000E+00	0.000E+00	0.000E+00	0.000E+00	0.000E+00	0.000E+00
CS147	0.000E+00	0.000E+00	0.000E+00	0.000E+00	0.000E+00	0.000E+00	0.000E+00	0.000E+00	0.000E+00	0.000E+00	0.000E+00	0.000E+00
BA147	0.000E+00	0.000E+00	0.000E+00	0.000E+00	0.000E+00	0.000E+00	0.000E+00	0.000E+00	0.000E+00	0.000E+00	0.000E+00	0.000E+00

1 OUTPUT UNIT = 11 PAGE 36

ORIGEN2 V2.1 (8-1-91), Run on 03/10/04 at 13:15:17

* Decay of containment activity on a per cc basis

\+ FISSION PRODUCTS

POWER= 1.00000E+00 MW, BURNUP= 1.00000E+00 MWD, FLUX= 1.00E+00 N/CM**2-SEC

0 7 NUCLIDE TABLE: RADIOACTIVITY, CURIES

	0 HR	1 HR	2 HR	4 HR	8 HR	12 HR	24 HR	48 HR	72 HR	96 HR	144 HR	288 HR
LA147	0.000E+00	0.000E+00	0.000E+00	0.000E+00	0.000E+00	0.000E+00	0.000E+00	0.000E+00	0.000E+00	0.000E+00	0.000E+00	0.000E+00
CE147	0.000E+00	0.000E+00	0.000E+00	0.000E+00	0.000E+00	0.000E+00	0.000E+00	0.000E+00	0.000E+00	0.000E+00	0.000E+00	0.000E+00
PR147	0.000E+00	0.000E+00	0.000E+00	0.000E+00	0.000E+00	0.000E+00	0.000E+00	0.000E+00	0.000E+00	0.000E+00	0.000E+00	0.000E+00
ND147	0.000E+00	0.000E+00	0.000E+00	0.000E+00	0.000E+00	0.000E+00	0.000E+00	0.000E+00	0.000E+00	0.000E+00	0.000E+00	0.000E+00
PM147	0.000E+00	0.000E+00	0.000E+00	0.000E+00	0.000E+00	0.000E+00	0.000E+00	0.000E+00	0.000E+00	0.000E+00	0.000E+00	0.000E+00
SM147	0.000E+00	0.000E+00	0.000E+00	0.000E+00	0.000E+00	0.000E+00	0.000E+00	0.000E+00	0.000E+00	0.000E+00	0.000E+00	0.000E+00
CS148	0.000E+00	0.000E+00	0.000E+00	0.000E+00	0.000E+00	0.000E+00	0.000E+00	0.000E+00	0.000E+00	0.000E+00	0.000E+00	0.000E+00
BA148	0.000E+00	0.000E+00	0.000E+00	0.000E+00	0.000E+00	0.000E+00	0.000E+00	0.000E+00	0.000E+00	0.000E+00	0.000E+00	0.000E+00
LA148	0.000E+00	0.000E+00	0.000E+00	0.000E+00	0.000E+00	0.000E+00	0.000E+00	0.000E+00	0.000E+00	0.000E+00	0.000E+00	0.000E+00
CE148	0.000E+00	0.000E+00	0.000E+00	0.000E+00	0.000E+00	0.000E+00	0.000E+00	0.000E+00	0.000E+00	0.000E+00	0.000E+00	0.000E+00
PR148	0.000E+00	0.000E+00	0.000E+00	0.000E+00	0.000E+00	0.000E+00	0.000E+00	0.000E+00	0.000E+00	0.000E+00	0.000E+00	0.000E+00
ND148	0.000E+00	0.000E+00	0.000E+00	0.000E+00	0.000E+00	0.000E+00	0.000E+00	0.000E+00	0.000E+00	0.000E+00	0.000E+00	0.000E+00
PM148	0.000E+00	0.000E+00	0.000E+00	0.000E+00	0.000E+00	0.000E+00	0.000E+00	0.000E+00	0.000E+00	0.000E+00	0.000E+00	0.000E+00
PM148M	0.000E+00	0.000E+00	0.000E+00	0.000E+00	0.000E+00	0.000E+00	0.000E+00	0.000E+00	0.000E+00	0.000E+00	0.000E+00	0.000E+00
SM148	0.000E+00	0.000E+00	0.000E+00	0.000E+00	0.000E+00	0.000E+00	0.000E+00	0.000E+00	0.000E+00	0.000E+00	0.000E+00	0.000E+00
CS149	0.000E+00	0.000E+00	0.000E+00	0.000E+00	0.000E+00	0.000E+00	0.000E+00	0.000E+00	0.000E+00	0.000E+00	0.000E+00	0.000E+00
BA149	0.000E+00	0.000E+00	0.000E+00	0.000E+00	0.000E+00	0.000E+00	0.000E+00	0.000E+00	0.000E+00	0.000E+00	0.000E+00	0.000E+00
LA149	0.000E+00	0.000E+00	0.000E+00	0.000E+00	0.000E+00	0.000E+00	0.000E+00	0.000E+00	0.000E+00	0.000E+00	0.000E+00	0.000E+00
CE149	0.000E+00	0.000E+00	0.000E+00	0.000E+00	0.000E+00	0.000E+00	0.000E+00	0.000E+00	0.000E+00	0.000E+00	0.000E+00	0.000E+00
PR149	0.000E+00	0.000E+00	0.000E+00	0.000E+00	0.000E+00	0.000E+00	0.000E+00	0.000E+00	0.000E+00	0.000E+00	0.000E+00	0.000E+00

ND149	0.000E+00	0.000E+00	0.000E+00	0.000E+00	0.000E+00	0.000E+00	0.000E+00	0.000E+00	0.000E+00	0.000E+00	0.000E+00	0.000E+00
PM149	0.000E+00	0.000E+00	0.000E+00	0.000E+00	0.000E+00	0.000E+00	0.000E+00	0.000E+00	0.000E+00	0.000E+00	0.000E+00	0.000E+00
SM149	0.000E+00	0.000E+00	0.000E+00	0.000E+00	0.000E+00	0.000E+00	0.000E+00	0.000E+00	0.000E+00	0.000E+00	0.000E+00	0.000E+00
EU149	0.000E+00	0.000E+00	0.000E+00	0.000E+00	0.000E+00	0.000E+00	0.000E+00	0.000E+00	0.000E+00	0.000E+00	0.000E+00	0.000E+00
CS150	0.000E+00	0.000E+00	0.000E+00	0.000E+00	0.000E+00	0.000E+00	0.000E+00	0.000E+00	0.000E+00	0.000E+00	0.000E+00	0.000E+00
BA150	0.000E+00	0.000E+00	0.000E+00	0.000E+00	0.000E+00	0.000E+00	0.000E+00	0.000E+00	0.000E+00	0.000E+00	0.000E+00	0.000E+00
LA150	0.000E+00	0.000E+00	0.000E+00	0.000E+00	0.000E+00	0.000E+00	0.000E+00	0.000E+00	0.000E+00	0.000E+00	0.000E+00	0.000E+00
CE150	0.000E+00	0.000E+00	0.000E+00	0.000E+00	0.000E+00	0.000E+00	0.000E+00	0.000E+00	0.000E+00	0.000E+00	0.000E+00	0.000E+00
PR150	0.000E+00	0.000E+00	0.000E+00	0.000E+00	0.000E+00	0.000E+00	0.000E+00	0.000E+00	0.000E+00	0.000E+00	0.000E+00	0.000E+00
ND150	0.000E+00	0.000E+00	0.000E+00	0.000E+00	0.000E+00	0.000E+00	0.000E+00	0.000E+00	0.000E+00	0.000E+00	0.000E+00	0.000E+00
PM150	0.000E+00	0.000E+00	0.000E+00	0.000E+00	0.000E+00	0.000E+00	0.000E+00	0.000E+00	0.000E+00	0.000E+00	0.000E+00	0.000E+00
SM150	0.000E+00	0.000E+00	0.000E+00	0.000E+00	0.000E+00	0.000E+00	0.000E+00	0.000E+00	0.000E+00	0.000E+00	0.000E+00	0.000E+00
EU150	0.000E+00	0.000E+00	0.000E+00	0.000E+00	0.000E+00	0.000E+00	0.000E+00	0.000E+00	0.000E+00	0.000E+00	0.000E+00	0.000E+00
BA151	0.000E+00	0.000E+00	0.000E+00	0.000E+00	0.000E+00	0.000E+00	0.000E+00	0.000E+00	0.000E+00	0.000E+00	0.000E+00	0.000E+00
LA151	0.000E+00	0.000E+00	0.000E+00	0.000E+00	0.000E+00	0.000E+00	0.000E+00	0.000E+00	0.000E+00	0.000E+00	0.000E+00	0.000E+00
CE151	0.000E+00	0.000E+00	0.000E+00	0.000E+00	0.000E+00	0.000E+00	0.000E+00	0.000E+00	0.000E+00	0.000E+00	0.000E+00	0.000E+00
PR151	0.000E+00	0.000E+00	0.000E+00	0.000E+00	0.000E+00	0.000E+00	0.000E+00	0.000E+00	0.000E+00	0.000E+00	0.000E+00	0.000E+00
ND151	0.000E+00	0.000E+00	0.000E+00	0.000E+00	0.000E+00	0.000E+00	0.000E+00	0.000E+00	0.000E+00	0.000E+00	0.000E+00	0.000E+00
PM151	0.000E+00	0.000E+00	0.000E+00	0.000E+00	0.000E+00	0.000E+00	0.000E+00	0.000E+00	0.000E+00	0.000E+00	0.000E+00	0.000E+00
SM151	0.000E+00	0.000E+00	0.000E+00	0.000E+00	0.000E+00	0.000E+00	0.000E+00	0.000E+00	0.000E+00	0.000E+00	0.000E+00	0.000E+00
EU151	0.000E+00	0.000E+00	0.000E+00	0.000E+00	0.000E+00	0.000E+00	0.000E+00	0.000E+00	0.000E+00	0.000E+00	0.000E+00	0.000E+00
BA152	0.000E+00	0.000E+00	0.000E+00	0.000E+00	0.000E+00	0.000E+00	0.000E+00	0.000E+00	0.000E+00	0.000E+00	0.000E+00	0.000E+00
LA152	0.000E+00	0.000E+00	0.000E+00	0.000E+00	0.000E+00	0.000E+00	0.000E+00	0.000E+00	0.000E+00	0.000E+00	0.000E+00	0.000E+00
CE152	0.000E+00	0.000E+00	0.000E+00	0.000E+00	0.000E+00	0.000E+00	0.000E+00	0.000E+00	0.000E+00	0.000E+00	0.000E+00	0.000E+00
PR152	0.000E+00	0.000E+00	0.000E+00	0.000E+00	0.000E+00	0.000E+00	0.000E+00	0.000E+00	0.000E+00	0.000E+00	0.000E+00	0.000E+00
ND152	0.000E+00	0.000E+00	0.000E+00	0.000E+00	0.000E+00	0.000E+00	0.000E+00	0.000E+00	0.000E+00	0.000E+00	0.000E+00	0.000E+00
PM152	0.000E+00	0.000E+00	0.000E+00	0.000E+00	0.000E+00	0.000E+00	0.000E+00	0.000E+00	0.000E+00	0.000E+00	0.000E+00	0.000E+00
PM152M	0.000E+00	0.000E+00	0.000E+00	0.000E+00	0.000E+00	0.000E+00	0.000E+00	0.000E+00	0.000E+00	0.000E+00	0.000E+00	0.000E+00
SM152	0.000E+00	0.000E+00	0.000E+00	0.000E+00	0.000E+00	0.000E+00	0.000E+00	0.000E+00	0.000E+00	0.000E+00	0.000E+00	0.000E+00
EU152	0.000E+00	0.000E+00	0.000E+00	0.000E+00	0.000E+00	0.000E+00	0.000E+00	0.000E+00	0.000E+00	0.000E+00	0.000E+00	0.000E+00
EU152M	0.000E+00	0.000E+00	0.000E+00	0.000E+00	0.000E+00	0.000E+00	0.000E+00	0.000E+00	0.000E+00	0.000E+00	0.000E+00	0.000E+00

```
1                                                                    OUTPUT UNIT = 11                                    PAGE   37
 ORIGEN2 V2.1 (8-1-91), Run on 03/10/04    at 13:15:17

     *  Decay of containment activity on a per cc basis
+                                                                                                   FISSION PRODUCTS
     POWER= 1.00000E+00 MW,  BURNUP= 1.00000E+00 MWD,  FLUX= 1.00E+00 N/CM**2-SEC
0                    7 NUCLIDE TABLE:  RADIOACTIVITY,  CURIES
```

	0 HR	1 HR	2 HR	4 HR	8 HR	12 HR	24 HR	48 HR	72 HR	96 HR	144 HR	288 HR
GD152	0.000E+00	0.000E+00	0.000E+00	0.000E+00	0.000E+00	0.000E+00	0.000E+00	0.000E+00	0.000E+00	0.000E+00	0.000E+00	0.000E+00
LA153	0.000E+00	0.000E+00	0.000E+00	0.000E+00	0.000E+00	0.000E+00	0.000E+00	0.000E+00	0.000E+00	0.000E+00	0.000E+00	0.000E+00
CE153	0.000E+00	0.000E+00	0.000E+00	0.000E+00	0.000E+00	0.000E+00	0.000E+00	0.000E+00	0.000E+00	0.000E+00	0.000E+00	0.000E+00
PR153	0.000E+00	0.000E+00	0.000E+00	0.000E+00	0.000E+00	0.000E+00	0.000E+00	0.000E+00	0.000E+00	0.000E+00	0.000E+00	0.000E+00
ND153	0.000E+00	0.000E+00	0.000E+00	0.000E+00	0.000E+00	0.000E+00	0.000E+00	0.000E+00	0.000E+00	0.000E+00	0.000E+00	0.000E+00
PM153	0.000E+00	0.000E+00	0.000E+00	0.000E+00	0.000E+00	0.000E+00	0.000E+00	0.000E+00	0.000E+00	0.000E+00	0.000E+00	0.000E+00
SM153	0.000E+00	0.000E+00	0.000E+00	0.000E+00	0.000E+00	0.000E+00	0.000E+00	0.000E+00	0.000E+00	0.000E+00	0.000E+00	0.000E+00
EU153	0.000E+00	0.000E+00	0.000E+00	0.000E+00	0.000E+00	0.000E+00	0.000E+00	0.000E+00	0.000E+00	0.000E+00	0.000E+00	0.000E+00
GD153	0.000E+00	0.000E+00	0.000E+00	0.000E+00	0.000E+00	0.000E+00	0.000E+00	0.000E+00	0.000E+00	0.000E+00	0.000E+00	0.000E+00
LA154	0.000E+00	0.000E+00	0.000E+00	0.000E+00	0.000E+00	0.000E+00	0.000E+00	0.000E+00	0.000E+00	0.000E+00	0.000E+00	0.000E+00
CE154	0.000E+00	0.000E+00	0.000E+00	0.000E+00	0.000E+00	0.000E+00	0.000E+00	0.000E+00	0.000E+00	0.000E+00	0.000E+00	0.000E+00
PR154	0.000E+00	0.000E+00	0.000E+00	0.000E+00	0.000E+00	0.000E+00	0.000E+00	0.000E+00	0.000E+00	0.000E+00	0.000E+00	0.000E+00
ND154	0.000E+00	0.000E+00	0.000E+00	0.000E+00	0.000E+00	0.000E+00	0.000E+00	0.000E+00	0.000E+00	0.000E+00	0.000E+00	0.000E+00
PM154	0.000E+00	0.000E+00	0.000E+00	0.000E+00	0.000E+00	0.000E+00	0.000E+00	0.000E+00	0.000E+00	0.000E+00	0.000E+00	0.000E+00
PM154M	0.000E+00	0.000E+00	0.000E+00	0.000E+00	0.000E+00	0.000E+00	0.000E+00	0.000E+00	0.000E+00	0.000E+00	0.000E+00	0.000E+00
SM154	0.000E+00	0.000E+00	0.000E+00	0.000E+00	0.000E+00	0.000E+00	0.000E+00	0.000E+00	0.000E+00	0.000E+00	0.000E+00	0.000E+00
EU154	0.000E+00	0.000E+00	0.000E+00	0.000E+00	0.000E+00	0.000E+00	0.000E+00	0.000E+00	0.000E+00	0.000E+00	0.000E+00	0.000E+00
GD154	0.000E+00	0.000E+00	0.000E+00	0.000E+00	0.000E+00	0.000E+00	0.000E+00	0.000E+00	0.000E+00	0.000E+00	0.000E+00	0.000E+00

LA155	0.000E+00	0.000E+00	0.000E+00	0.000E+00	0.000E+00	0.000E+00	0.000E+00	0.000E+00	0.000E+00	0.000E+00	0.000E+00	0.000E+00
CE155	0.000E+00	0.000E+00	0.000E+00	0.000E+00	0.000E+00	0.000E+00	0.000E+00	0.000E+00	0.000E+00	0.000E+00	0.000E+00	0.000E+00
PR155	0.000E+00	0.000E+00	0.000E+00	0.000E+00	0.000E+00	0.000E+00	0.000E+00	0.000E+00	0.000E+00	0.000E+00	0.000E+00	0.000E+00
ND155	0.000E+00	0.000E+00	0.000E+00	0.000E+00	0.000E+00	0.000E+00	0.000E+00	0.000E+00	0.000E+00	0.000E+00	0.000E+00	0.000E+00
PM155	0.000E+00	0.000E+00	0.000E+00	0.000E+00	0.000E+00	0.000E+00	0.000E+00	0.000E+00	0.000E+00	0.000E+00	0.000E+00	0.000E+00
SM155	0.000E+00	0.000E+00	0.000E+00	0.000E+00	0.000E+00	0.000E+00	0.000E+00	0.000E+00	0.000E+00	0.000E+00	0.000E+00	0.000E+00
EU155	0.000E+00	0.000E+00	0.000E+00	0.000E+00	0.000E+00	0.000E+00	0.000E+00	0.000E+00	0.000E+00	0.000E+00	0.000E+00	0.000E+00
GD155M	0.000E+00	0.000E+00	0.000E+00	0.000E+00	0.000E+00	0.000E+00	0.000E+00	0.000E+00	0.000E+00	0.000E+00	0.000E+00	0.000E+00
GD155	0.000E+00	0.000E+00	0.000E+00	0.000E+00	0.000E+00	0.000E+00	0.000E+00	0.000E+00	0.000E+00	0.000E+00	0.000E+00	0.000E+00
CE156	0.000E+00	0.000E+00	0.000E+00	0.000E+00	0.000E+00	0.000E+00	0.000E+00	0.000E+00	0.000E+00	0.000E+00	0.000E+00	0.000E+00
PR156	0.000E+00	0.000E+00	0.000E+00	0.000E+00	0.000E+00	0.000E+00	0.000E+00	0.000E+00	0.000E+00	0.000E+00	0.000E+00	0.000E+00
ND156	0.000E+00	0.000E+00	0.000E+00	0.000E+00	0.000E+00	0.000E+00	0.000E+00	0.000E+00	0.000E+00	0.000E+00	0.000E+00	0.000E+00
PM156	0.000E+00	0.000E+00	0.000E+00	0.000E+00	0.000E+00	0.000E+00	0.000E+00	0.000E+00	0.000E+00	0.000E+00	0.000E+00	0.000E+00
SM156	0.000E+00	0.000E+00	0.000E+00	0.000E+00	0.000E+00	0.000E+00	0.000E+00	0.000E+00	0.000E+00	0.000E+00	0.000E+00	0.000E+00
EU156	0.000E+00	0.000E+00	0.000E+00	0.000E+00	0.000E+00	0.000E+00	0.000E+00	0.000E+00	0.000E+00	0.000E+00	0.000E+00	0.000E+00
GD156	0.000E+00	0.000E+00	0.000E+00	0.000E+00	0.000E+00	0.000E+00	0.000E+00	0.000E+00	0.000E+00	0.000E+00	0.000E+00	0.000E+00
CE157	0.000E+00	0.000E+00	0.000E+00	0.000E+00	0.000E+00	0.000E+00	0.000E+00	0.000E+00	0.000E+00	0.000E+00	0.000E+00	0.000E+00
PR157	0.000E+00	0.000E+00	0.000E+00	0.000E+00	0.000E+00	0.000E+00	0.000E+00	0.000E+00	0.000E+00	0.000E+00	0.000E+00	0.000E+00
ND157	0.000E+00	0.000E+00	0.000E+00	0.000E+00	0.000E+00	0.000E+00	0.000E+00	0.000E+00	0.000E+00	0.000E+00	0.000E+00	0.000E+00
PM157	0.000E+00	0.000E+00	0.000E+00	0.000E+00	0.000E+00	0.000E+00	0.000E+00	0.000E+00	0.000E+00	0.000E+00	0.000E+00	0.000E+00
SM157	0.000E+00	0.000E+00	0.000E+00	0.000E+00	0.000E+00	0.000E+00	0.000E+00	0.000E+00	0.000E+00	0.000E+00	0.000E+00	0.000E+00
EU157	0.000E+00	0.000E+00	0.000E+00	0.000E+00	0.000E+00	0.000E+00	0.000E+00	0.000E+00	0.000E+00	0.000E+00	0.000E+00	0.000E+00
GD157	0.000E+00	0.000E+00	0.000E+00	0.000E+00	0.000E+00	0.000E+00	0.000E+00	0.000E+00	0.000E+00	0.000E+00	0.000E+00	0.000E+00
PR158	0.000E+00	0.000E+00	0.000E+00	0.000E+00	0.000E+00	0.000E+00	0.000E+00	0.000E+00	0.000E+00	0.000E+00	0.000E+00	0.000E+00
ND158	0.000E+00	0.000E+00	0.000E+00	0.000E+00	0.000E+00	0.000E+00	0.000E+00	0.000E+00	0.000E+00	0.000E+00	0.000E+00	0.000E+00
PM158	0.000E+00	0.000E+00	0.000E+00	0.000E+00	0.000E+00	0.000E+00	0.000E+00	0.000E+00	0.000E+00	0.000E+00	0.000E+00	0.000E+00
SM158	0.000E+00	0.000E+00	0.000E+00	0.000E+00	0.000E+00	0.000E+00	0.000E+00	0.000E+00	0.000E+00	0.000E+00	0.000E+00	0.000E+00
EU158	0.000E+00	0.000E+00	0.000E+00	0.000E+00	0.000E+00	0.000E+00	0.000E+00	0.000E+00	0.000E+00	0.000E+00	0.000E+00	0.000E+00
GD158	0.000E+00	0.000E+00	0.000E+00	0.000E+00	0.000E+00	0.000E+00	0.000E+00	0.000E+00	0.000E+00	0.000E+00	0.000E+00	0.000E+00
PR159	0.000E+00	0.000E+00	0.000E+00	0.000E+00	0.000E+00	0.000E+00	0.000E+00	0.000E+00	0.000E+00	0.000E+00	0.000E+00	0.000E+00
ND159	0.000E+00	0.000E+00	0.000E+00	0.000E+00	0.000E+00	0.000E+00	0.000E+00	0.000E+00	0.000E+00	0.000E+00	0.000E+00	0.000E+00
PM159	0.000E+00	0.000E+00	0.000E+00	0.000E+00	0.000E+00	0.000E+00	0.000E+00	0.000E+00	0.000E+00	0.000E+00	0.000E+00	0.000E+00
SM159	0.000E+00	0.000E+00	0.000E+00	0.000E+00	0.000E+00	0.000E+00	0.000E+00	0.000E+00	0.000E+00	0.000E+00	0.000E+00	0.000E+00

1 OUTPUT UNIT = 11 PAGE 38

ORIGEN2 V2.1 (8-1-91), Run on 03/10/04 at 13:15:17

* Decay of containment activity on a per cc basis

\+ FISSION PRODUCTS

POWER= 1.00000E+00 MW, BURNUP= 1.00000E+00 MWD, FLUX= 1.00E+00 N/CM**2-SEC

0 7 NUCLIDE TABLE: RADIOACTIVITY, CURIES

	0 HR	1 HR	2 HR	4 HR	8 HR	12 HR	24 HR	48 HR	72 HR	96 HR	144 HR	288 HR
EU159	0.000E+00	0.000E+00	0.000E+00	0.000E+00	0.000E+00	0.000E+00	0.000E+00	0.000E+00	0.000E+00	0.000E+00	0.000E+00	0.000E+00
GD159	0.000E+00	0.000E+00	0.000E+00	0.000E+00	0.000E+00	0.000E+00	0.000E+00	0.000E+00	0.000E+00	0.000E+00	0.000E+00	0.000E+00
TB159	0.000E+00	0.000E+00	0.000E+00	0.000E+00	0.000E+00	0.000E+00	0.000E+00	0.000E+00	0.000E+00	0.000E+00	0.000E+00	0.000E+00
ND160	0.000E+00	0.000E+00	0.000E+00	0.000E+00	0.000E+00	0.000E+00	0.000E+00	0.000E+00	0.000E+00	0.000E+00	0.000E+00	0.000E+00
PM160	0.000E+00	0.000E+00	0.000E+00	0.000E+00	0.000E+00	0.000E+00	0.000E+00	0.000E+00	0.000E+00	0.000E+00	0.000E+00	0.000E+00
SM160	0.000E+00	0.000E+00	0.000E+00	0.000E+00	0.000E+00	0.000E+00	0.000E+00	0.000E+00	0.000E+00	0.000E+00	0.000E+00	0.000E+00
EU160	0.000E+00	0.000E+00	0.000E+00	0.000E+00	0.000E+00	0.000E+00	0.000E+00	0.000E+00	0.000E+00	0.000E+00	0.000E+00	0.000E+00
GD160	0.000E+00	0.000E+00	0.000E+00	0.000E+00	0.000E+00	0.000E+00	0.000E+00	0.000E+00	0.000E+00	0.000E+00	0.000E+00	0.000E+00
TB160	0.000E+00	0.000E+00	0.000E+00	0.000E+00	0.000E+00	0.000E+00	0.000E+00	0.000E+00	0.000E+00	0.000E+00	0.000E+00	0.000E+00
DY160	0.000E+00	0.000E+00	0.000E+00	0.000E+00	0.000E+00	0.000E+00	0.000E+00	0.000E+00	0.000E+00	0.000E+00	0.000E+00	0.000E+00
ND161	0.000E+00	0.000E+00	0.000E+00	0.000E+00	0.000E+00	0.000E+00	0.000E+00	0.000E+00	0.000E+00	0.000E+00	0.000E+00	0.000E+00
PM161	0.000E+00	0.000E+00	0.000E+00	0.000E+00	0.000E+00	0.000E+00	0.000E+00	0.000E+00	0.000E+00	0.000E+00	0.000E+00	0.000E+00
SM161	0.000E+00	0.000E+00	0.000E+00	0.000E+00	0.000E+00	0.000E+00	0.000E+00	0.000E+00	0.000E+00	0.000E+00	0.000E+00	0.000E+00
EU161	0.000E+00	0.000E+00	0.000E+00	0.000E+00	0.000E+00	0.000E+00	0.000E+00	0.000E+00	0.000E+00	0.000E+00	0.000E+00	0.000E+00
GD161	0.000E+00	0.000E+00	0.000E+00	0.000E+00	0.000E+00	0.000E+00	0.000E+00	0.000E+00	0.000E+00	0.000E+00	0.000E+00	0.000E+00
TB161	0.000E+00	0.000E+00	0.000E+00	0.000E+00	0.000E+00	0.000E+00	0.000E+00	0.000E+00	0.000E+00	0.000E+00	0.000E+00	0.000E+00

DY161	0.000E+00	0.000E+00	0.000E+00	0.000E+00	0.000E+00	0.000E+00	0.000E+00	0.000E+00	0.000E+00	0.000E+00	0.000E+00	0.000E+00
PM162	0.000E+00	0.000E+00	0.000E+00	0.000E+00	0.000E+00	0.000E+00	0.000E+00	0.000E+00	0.000E+00	0.000E+00	0.000E+00	0.000E+00
SM162	0.000E+00	0.000E+00	0.000E+00	0.000E+00	0.000E+00	0.000E+00	0.000E+00	0.000E+00	0.000E+00	0.000E+00	0.000E+00	0.000E+00
EU162	0.000E+00	0.000E+00	0.000E+00	0.000E+00	0.000E+00	0.000E+00	0.000E+00	0.000E+00	0.000E+00	0.000E+00	0.000E+00	0.000E+00
GD162	0.000E+00	0.000E+00	0.000E+00	0.000E+00	0.000E+00	0.000E+00	0.000E+00	0.000E+00	0.000E+00	0.000E+00	0.000E+00	0.000E+00
TB162	0.000E+00	0.000E+00	0.000E+00	0.000E+00	0.000E+00	0.000E+00	0.000E+00	0.000E+00	0.000E+00	0.000E+00	0.000E+00	0.000E+00
TB162M	0.000E+00	0.000E+00	0.000E+00	0.000E+00	0.000E+00	0.000E+00	0.000E+00	0.000E+00	0.000E+00	0.000E+00	0.000E+00	0.000E+00
DY162	0.000E+00	0.000E+00	0.000E+00	0.000E+00	0.000E+00	0.000E+00	0.000E+00	0.000E+00	0.000E+00	0.000E+00	0.000E+00	0.000E+00
SM163	0.000E+00	0.000E+00	0.000E+00	0.000E+00	0.000E+00	0.000E+00	0.000E+00	0.000E+00	0.000E+00	0.000E+00	0.000E+00	0.000E+00
EU163	0.000E+00	0.000E+00	0.000E+00	0.000E+00	0.000E+00	0.000E+00	0.000E+00	0.000E+00	0.000E+00	0.000E+00	0.000E+00	0.000E+00
GD163	0.000E+00	0.000E+00	0.000E+00	0.000E+00	0.000E+00	0.000E+00	0.000E+00	0.000E+00	0.000E+00	0.000E+00	0.000E+00	0.000E+00
TB163	0.000E+00	0.000E+00	0.000E+00	0.000E+00	0.000E+00	0.000E+00	0.000E+00	0.000E+00	0.000E+00	0.000E+00	0.000E+00	0.000E+00
TB163M	0.000E+00	0.000E+00	0.000E+00	0.000E+00	0.000E+00	0.000E+00	0.000E+00	0.000E+00	0.000E+00	0.000E+00	0.000E+00	0.000E+00
DY163	0.000E+00	0.000E+00	0.000E+00	0.000E+00	0.000E+00	0.000E+00	0.000E+00	0.000E+00	0.000E+00	0.000E+00	0.000E+00	0.000E+00
SM164	0.000E+00	0.000E+00	0.000E+00	0.000E+00	0.000E+00	0.000E+00	0.000E+00	0.000E+00	0.000E+00	0.000E+00	0.000E+00	0.000E+00
EU164	0.000E+00	0.000E+00	0.000E+00	0.000E+00	0.000E+00	0.000E+00	0.000E+00	0.000E+00	0.000E+00	0.000E+00	0.000E+00	0.000E+00
GD164	0.000E+00	0.000E+00	0.000E+00	0.000E+00	0.000E+00	0.000E+00	0.000E+00	0.000E+00	0.000E+00	0.000E+00	0.000E+00	0.000E+00
TB164	0.000E+00	0.000E+00	0.000E+00	0.000E+00	0.000E+00	0.000E+00	0.000E+00	0.000E+00	0.000E+00	0.000E+00	0.000E+00	0.000E+00
DY164	0.000E+00	0.000E+00	0.000E+00	0.000E+00	0.000E+00	0.000E+00	0.000E+00	0.000E+00	0.000E+00	0.000E+00	0.000E+00	0.000E+00
SM165	0.000E+00	0.000E+00	0.000E+00	0.000E+00	0.000E+00	0.000E+00	0.000E+00	0.000E+00	0.000E+00	0.000E+00	0.000E+00	0.000E+00
EU165	0.000E+00	0.000E+00	0.000E+00	0.000E+00	0.000E+00	0.000E+00	0.000E+00	0.000E+00	0.000E+00	0.000E+00	0.000E+00	0.000E+00
GD165	0.000E+00	0.000E+00	0.000E+00	0.000E+00	0.000E+00	0.000E+00	0.000E+00	0.000E+00	0.000E+00	0.000E+00	0.000E+00	0.000E+00
TB165	0.000E+00	0.000E+00	0.000E+00	0.000E+00	0.000E+00	0.000E+00	0.000E+00	0.000E+00	0.000E+00	0.000E+00	0.000E+00	0.000E+00
DY165	0.000E+00	0.000E+00	0.000E+00	0.000E+00	0.000E+00	0.000E+00	0.000E+00	0.000E+00	0.000E+00	0.000E+00	0.000E+00	0.000E+00
DY165M	0.000E+00	0.000E+00	0.000E+00	0.000E+00	0.000E+00	0.000E+00	0.000E+00	0.000E+00	0.000E+00	0.000E+00	0.000E+00	0.000E+00
HO165	0.000E+00	0.000E+00	0.000E+00	0.000E+00	0.000E+00	0.000E+00	0.000E+00	0.000E+00	0.000E+00	0.000E+00	0.000E+00	0.000E+00
DY166	0.000E+00	0.000E+00	0.000E+00	0.000E+00	0.000E+00	0.000E+00	0.000E+00	0.000E+00	0.000E+00	0.000E+00	0.000E+00	0.000E+00
HO166	0.000E+00	0.000E+00	0.000E+00	0.000E+00	0.000E+00	0.000E+00	0.000E+00	0.000E+00	0.000E+00	0.000E+00	0.000E+00	0.000E+00
HO166M	0.000E+00	0.000E+00	0.000E+00	0.000E+00	0.000E+00	0.000E+00	0.000E+00	0.000E+00	0.000E+00	0.000E+00	0.000E+00	0.000E+00
ER166	0.000E+00	0.000E+00	0.000E+00	0.000E+00	0.000E+00	0.000E+00	0.000E+00	0.000E+00	0.000E+00	0.000E+00	0.000E+00	0.000E+00
ER167	0.000E+00	0.000E+00	0.000E+00	0.000E+00	0.000E+00	0.000E+00	0.000E+00	0.000E+00	0.000E+00	0.000E+00	0.000E+00	0.000E+00
ER167M	0.000E+00	0.000E+00	0.000E+00	0.000E+00	0.000E+00	0.000E+00	0.000E+00	0.000E+00	0.000E+00	0.000E+00	0.000E+00	0.000E+00
ER168	0.000E+00	0.000E+00	0.000E+00	0.000E+00	0.000E+00	0.000E+00	0.000E+00	0.000E+00	0.000E+00	0.000E+00	0.000E+00	0.000E+00
YB168	0.000E+00	0.000E+00	0.000E+00	0.000E+00	0.000E+00	0.000E+00	0.000E+00	0.000E+00	0.000E+00	0.000E+00	0.000E+00	0.000E+00
ER169	0.000E+00	0.000E+00	0.000E+00	0.000E+00	0.000E+00	0.000E+00	0.000E+00	0.000E+00	0.000E+00	0.000E+00	0.000E+00	0.000E+00

1 OUTPUT UNIT = 11 PAGE 39

ORIGEN2 V2.1 (8-1-91), Run on 03/10/04 at 13:15:17

* Decay of containment activity on a per cc basis

\+ FISSION PRODUCTS

POWER= 1.00000E+00 MW, BURNUP= 1.00000E+00 MWD, FLUX= 1.00E+00 N/CM**2-SEC

0 7 NUCLIDE TABLE: RADIOACTIVITY, CURIES

	0 HR	1 HR	2 HR	4 HR	8 HR	12 HR	24 HR	48 HR	72 HR	96 HR	144 HR	288 HR
TM169	0.000E+00	0.000E+00	0.000E+00	0.000E+00	0.000E+00	0.000E+00	0.000E+00	0.000E+00	0.000E+00	0.000E+00	0.000E+00	0.000E+00
YB169	0.000E+00	0.000E+00	0.000E+00	0.000E+00	0.000E+00	0.000E+00	0.000E+00	0.000E+00	0.000E+00	0.000E+00	0.000E+00	0.000E+00
ER170	0.000E+00	0.000E+00	0.000E+00	0.000E+00	0.000E+00	0.000E+00	0.000E+00	0.000E+00	0.000E+00	0.000E+00	0.000E+00	0.000E+00
TM170	0.000E+00	0.000E+00	0.000E+00	0.000E+00	0.000E+00	0.000E+00	0.000E+00	0.000E+00	0.000E+00	0.000E+00	0.000E+00	0.000E+00
TM170M	0.000E+00	0.000E+00	0.000E+00	0.000E+00	0.000E+00	0.000E+00	0.000E+00	0.000E+00	0.000E+00	0.000E+00	0.000E+00	0.000E+00
YB170	0.000E+00	0.000E+00	0.000E+00	0.000E+00	0.000E+00	0.000E+00	0.000E+00	0.000E+00	0.000E+00	0.000E+00	0.000E+00	0.000E+00
ER171	0.000E+00	0.000E+00	0.000E+00	0.000E+00	0.000E+00	0.000E+00	0.000E+00	0.000E+00	0.000E+00	0.000E+00	0.000E+00	0.000E+00
TM171	0.000E+00	0.000E+00	0.000E+00	0.000E+00	0.000E+00	0.000E+00	0.000E+00	0.000E+00	0.000E+00	0.000E+00	0.000E+00	0.000E+00
YB171	0.000E+00	0.000E+00	0.000E+00	0.000E+00	0.000E+00	0.000E+00	0.000E+00	0.000E+00	0.000E+00	0.000E+00	0.000E+00	0.000E+00
ER172	0.000E+00	0.000E+00	0.000E+00	0.000E+00	0.000E+00	0.000E+00	0.000E+00	0.000E+00	0.000E+00	0.000E+00	0.000E+00	0.000E+00
TM172	0.000E+00	0.000E+00	0.000E+00	0.000E+00	0.000E+00	0.000E+00	0.000E+00	0.000E+00	0.000E+00	0.000E+00	0.000E+00	0.000E+00
YB172	0.000E+00	0.000E+00	0.000E+00	0.000E+00	0.000E+00	0.000E+00	0.000E+00	0.000E+00	0.000E+00	0.000E+00	0.000E+00	0.000E+00
TOTAL	3.438E-03	2.867E-03	2.518E-03	2.157E-03	1.828E-03	1.644E-03	1.331E-03	1.046E-03	9.113E-04	8.239E-04	7.000E-04	4.803E-04

1 OUTPUT UNIT = 11 PAGE 40

ORIGEN2 V2.1 (8-1-91), Run on 03/10/04 at 13:15:17

* Decay of containment activity on a per cc basis

\+ FISSION PRODUCTS

POWER= 1.00000E+00 MW, BURNUP= 1.00000E+00 MWD, FLUX= 1.00E+00 N/CM**2-SEC

0 7 SUMMARY TABLE: RADIOACTIVITY, CURIES

	0 HR	1 HR	2 HR	4 HR	8 HR	12 HR	24 HR	48 HR	72 HR	96 HR	144 HR	288 HR
KR 85	5.102E-06	5.103E-06	5.103E-06	5.103E-06	5.103E-06	5.103E-06	5.102E-06	5.101E-06	5.100E-06	5.099E-06	5.098E-06	5.092E-06
KR 85M	5.590E-05	4.788E-05	4.102E-05	3.010E-05	1.621E-05	8.733E-06	1.364E-06	3.330E-08	8.128E-10	1.984E-11	1.182E-14	2.499E-24
RB 86	1.050E-06	1.049E-06	1.047E-06	1.044E-06	1.037E-06	1.031E-06	1.012E-06	9.750E-07	9.395E-07	9.052E-07	8.404E-07	6.725E-07
KR 87	1.080E-04	6.260E-05	3.630E-05	1.220E-05	1.379E-06	1.558E-07	2.242E-10	4.671E-16	9.729E-22	2.027E-27	0.000E+00	0.000E+00
KR 88	1.518E-04	1.190E-04	9.318E-05	5.718E-05	2.153E-05	8.109E-06	4.330E-07	1.234E-09	3.516E-12	1.009E-14	8.202E-20	4.333E-35
RB 88	0.000E+00	1.164E-04	1.025E-04	6.384E-05	2.405E-05	9.057E-06	4.835E-07	1.379E-09	3.930E-12	1.126E-14	9.159E-20	4.443E-35
I131	3.349E-04	3.337E-04	3.325E-04	3.301E-04	3.254E-04	3.207E-04	3.072E-04	2.818E-04	2.585E-04	2.372E-04	1.996E-04	1.190E-04
XE131M	2.238E-06	2.241E-06	2.245E-06	2.252E-06	2.265E-06	2.278E-06	2.313E-06	2.366E-06	2.402E-06	2.422E-06	2.421E-06	2.209E-06
I132	3.015E-04	2.231E-04	1.650E-04	9.033E-05	2.706E-05	8.105E-06	2.178E-07	1.574E-10	1.137E-13	8.215E-17	4.288E-23	0.000E+00
I133	4.273E-04	4.132E-04	3.997E-04	3.739E-04	3.273E-04	2.864E-04	1.920E-04	8.630E-05	3.878E-05	1.743E-05	3.521E-06	2.901E-08
XE133	4.232E-04	4.232E-04	4.231E-04	4.227E-04	4.212E-04	4.188E-04	4.074E-04	3.741E-04	3.359E-04	2.983E-04	2.319E-04	1.059E-04
XE133M	1.328E-05	1.326E-05	1.324E-05	1.319E-05	1.303E-05	1.281E-05	1.193E-05	9.703E-06	7.525E-06	5.688E-06	3.128E-06	4.777E-07
I134	4.724E-04	2.142E-04	9.717E-05	1.999E-05	8.458E-07	3.579E-08	2.711E-12	1.556E-20	8.931E-29	0.000E+00	0.000E+00	0.000E+00
CS134	1.033E-04	1.033E-04	1.033E-04	1.033E-04	1.033E-04	1.032E-04	1.032E-04	1.031E-04	1.030E-04	1.029E-04	1.027E-04	1.022E-04
I135	4.005E-04	3.606E-04	3.247E-04	2.633E-04	1.731E-04	1.138E-04	3.234E-05	2.612E-06	2.109E-07	1.703E-08	1.111E-10	3.082E-17
XE135	1.091E-04	1.297E-04	1.454E-04	1.665E-04	1.789E-04	1.688E-04	1.030E-04	2.341E-05	4.310E-06	7.361E-07	1.980E-08	3.418E-13
XE135M	8.393E-05	5.906E-05	5.209E-05	4.217E-05	2.773E-05	1.823E-05	5.180E-06	4.183E-07	3.378E-08	2.728E-09	1.779E-11	4.936E-18
CS136	2.581E-05	2.575E-05	2.569E-05	2.558E-05	2.535E-05	2.513E-05	2.448E-05	2.321E-05	2.202E-05	2.088E-05	1.879E-05	1.368E-05
BA136M	0.000E+00	4.243E-06	4.234E-06	4.215E-06	4.178E-06	4.142E-06	4.034E-06	3.826E-06	3.629E-06	3.442E-06	3.096E-06	2.254E-06
CS137	6.622E-05	6.622E-05	6.622E-05	6.622E-05	6.622E-05	6.622E-05	6.622E-05	6.622E-05	6.621E-05	6.621E-05	6.620E-05	6.617E-05
BA137M	0.000E+00	6.265E-05	6.265E-05	6.265E-05	6.265E-05	6.265E-05	6.264E-05	6.264E-05	6.264E-05	6.263E-05	6.262E-05	6.260E-05
XE138	3.530E-04	1.876E-05	9.966E-07	2.815E-09	2.243E-14	1.787E-19	9.301E-35	0.000E+00	0.000E+00	0.000E+00	0.000E+00	0.000E+00
CS138	0.000E+00	6.151E-05	2.017E-05	1.581E-06	9.033E-09	5.155E-11	9.575E-18	3.303E-31	0.000E+00	0.000E+00	0.000E+00	0.000E+00
SUMTOT	3.438E-03	2.867E-03	2.518E-03	2.157E-03	1.828E-03	1.644E-03	1.331E-03	1.046E-03	9.113E-04	8.239E-04	7.000E-04	4.803E-04
0TOTAL	3.438E-03	2.867E-03	2.518E-03	2.157E-03	1.828E-03	1.644E-03	1.331E-03	1.046E-03	9.113E-04	8.239E-04	7.000E-04	4.803E-04

1 OUTPUT UNIT = 11 PAGE 41

ORIGEN2 V2.1 (8-1-91), Run on 03/10/04 at 13:15:17

* Decay of containment activity on a per cc basis

\+ FISSION PRODUCTS

POWER= 1.00000E+00 MW, BURNUP= 1.00000E+00 MWD, FLUX= 1.00E+00 N/CM**2-SEC

0 7 SUMMARY TABLE: RADIOACTIVITY, CURIES

	0 HR	1 HR	2 HR	4 HR	8 HR	12 HR	24 HR	48 HR	72 HR	96 HR	144 HR	288 HR
KR	3.208E-04	2.345E-04	1.756E-04	1.046E-04	4.423E-05	2.210E-05	6.900E-06	5.136E-06	5.101E-06	5.099E-06	5.098E-06	5.092E-06
RB	1.050E-06	1.175E-04	1.035E-04	6.488E-05	2.509E-05	1.009E-05	1.495E-06	9.764E-07	9.395E-07	9.052E-07	8.404E-07	6.725E-07
I	1.936E-03	1.545E-03	1.319E-03	1.078E-03	8.536E-04	7.291E-04	5.318E-04	3.707E-04	2.975E-04	2.546E-04	2.031E-04	1.190E-04
XE	9.848E-04	6.461E-04	6.371E-04	6.468E-04	6.431E-04	6.209E-04	5.299E-04	4.100E-04	3.502E-04	3.072E-04	2.375E-04	1.086E-04
CS	1.953E-04	2.568E-04	2.154E-04	1.967E-04	1.948E-04	1.946E-04	1.939E-04	1.925E-04	1.912E-04	1.900E-04	1.877E-04	1.820E-04
BA	0.000E+00	6.689E-05	6.688E-05	6.686E-05	6.682E-05	6.679E-05	6.668E-05	6.647E-05	6.626E-05	6.607E-05	6.572E-05	6.485E-05
SUMTOT	3.438E-03	2.867E-03	2.518E-03	2.157E-03	1.828E-03	1.644E-03	1.331E-03	1.046E-03	9.113E-04	8.239E-04	7.000E-04	4.803E-04
0TOTAL	3.438E-03	2.867E-03	2.518E-03	2.157E-03	1.828E-03	1.644E-03	1.331E-03	1.046E-03	9.113E-04	8.239E-04	7.000E-04	4.803E-04

0 CUMULATIVE TABLE TOTALS

AP+FP	3.438E-03	2.867E-03	2.518E-03	2.157E-03	1.828E-03	1.644E-03	1.331E-03	1.046E-03	9.113E-04	8.239E-04	7.000E-04	4.803E-04
ACT+FP	3.438E-03	2.867E-03	2.518E-03	2.157E-03	1.828E-03	1.644E-03	1.331E-03	1.046E-03	9.113E-04	8.239E-04	7.000E-04	4.803E-04
AP+ACT+FP	3.438E-03	2.867E-03	2.518E-03	2.157E-03	1.828E-03	1.644E-03	1.331E-03	1.046E-03	9.113E-04	8.239E-04	7.000E-04	4.803E-04

1 OUTPUT UNIT = 11 PAGE 42

ORIGEN2 V2.1 (8-1-91), Run on 03/10/04 at 13:15:17

Decay of containment activity on a per cc basis

```
                              (ALPHA,N) NEUTRON SOURCE, NEUTRONS/SEC
 BASIS=[illegible]
            0 HR      1 HR      2 HR      4 HR      8 HR      12 HR     24 HR     48 HR     72 HR     96 HR     144 HR    288 HR
0-----------------------------------------------------------------------------------------------------------------------------------
 TOTALS
 TABLE      0.000E+00 0.000E+00 0.000E+00 0.000E+00 0.000E+00 0.000E+00 0.000E+00 0.000E+00 0.000E+00 0.000E+00 0.000E+00 0.000E+00
 ACTUAL     0.000E+00 0.000E+00 0.000E+00 0.000E+00 0.000E+00 0.000E+00 0.000E+00 0.000E+00 0.000E+00 0.000E+00 0.000E+00 0.000E+00
1                                                                                   OUTPUT UNIT = 11                        PAGE   43
 ORIGEN2 V2.1 (8-1-91), Run on 03/10/04    at 13:15:17
                                  Decay of containment activity on a per cc basis
                              SPONTANEOUS FISSION NEUTRON SOURCE, NEUTRONS/SEC
                            BASIS=[illegible]
            0 HR      1 HR      2 HR      4 HR      8 HR      12 HR     24 HR     48 HR     72 HR     96 HR     144 HR    288 HR
0-----------------------------------------------------------------------------------------------------------------------------------
 TOTALS
 TABLE      0.000E+00 0.000E+00 0.000E+00 0.000E+00 0.000E+00 0.000E+00 0.000E+00 0.000E+00 0.000E+00 0.000E+00 0.000E+00 0.000E+00
 ACTUAL     0.000E+00 0.000E+00 0.000E+00 0.000E+00 0.000E+00 0.000E+00 0.000E+00 0.000E+00 0.000E+00 0.000E+00 0.000E+00 0.000E+00
0-----------------------------------------------------------------------------------------------------------------------------------
 OVERALL
 TOTALS
 TABLE      0.000E+00 0.000E+00 0.000E+00 0.000E+00 0.000E+00 0.000E+00 0.000E+00 0.000E+00 0.000E+00 0.000E+00 0.000E+00 0.000E+00
 ACTUAL     0.000E+00 0.000E+00 0.000E+00 0.000E+00 0.000E+00 0.000E+00 0.000E+00 0.000E+00 0.000E+00 0.000E+00 0.000E+00 0.000E+00
1                                                                                   OUTPUT UNIT = 11                        PAGE   44
 ORIGEN2 V2.1 (8-1-91), Run on 03/10/04    at 13:15:17
                PHOTON SPECTRUM FOR ACTIVATION PRODUCTS
0                                 Decay of containment activity on a per cc basis
                                     POWER=   1.00 MW, BURNUP=      1. MWD, FLUX= 1.00E+00 N/CM**2-SEC
0                                 18 GROUP PHOTON RELEASE RATES, PHOTONS/SECOND
                                  BASIS=[illegible]
  EMEAN
            0 HR      1 HR      2 HR      4 HR      8 HR      12 HR     24 HR     48 HR     72 HR     96 HR     144 HR    288 HR
 1.000E-02  0.000E+00 0.000E+00 0.000E+00 0.000E+00 0.000E+00 0.000E+00 0.000E+00 0.000E+00 0.000E+00 0.000E+00 0.000E+00 0.000E+00
 2.500E-02  0.000E+00 0.000E+00 0.000E+00 0.000E+00 0.000E+00 0.000E+00 0.000E+00 0.000E+00 0.000E+00 0.000E+00 0.000E+00 0.000E+00
 3.750E-02  0.000E+00 0.000E+00 0.000E+00 0.000E+00 0.000E+00 0.000E+00 0.000E+00 0.000E+00 0.000E+00 0.000E+00 0.000E+00 0.000E+00
 5.750E-02  0.000E+00 0.000E+00 0.000E+00 0.000E+00 0.000E+00 0.000E+00 0.000E+00 0.000E+00 0.000E+00 0.000E+00 0.000E+00 0.000E+00
 8.500E-02  0.000E+00 0.000E+00 0.000E+00 0.000E+00 0.000E+00 0.000E+00 0.000E+00 0.000E+00 0.000E+00 0.000E+00 0.000E+00 0.000E+00
 1.250E-01  0.000E+00 0.000E+00 0.000E+00 0.000E+00 0.000E+00 0.000E+00 0.000E+00 0.000E+00 0.000E+00 0.000E+00 0.000E+00 0.000E+00
 2.250E-01  0.000E+00 0.000E+00 0.000E+00 0.000E+00 0.000E+00 0.000E+00 0.000E+00 0.000E+00 0.000E+00 0.000E+00 0.000E+00 0.000E+00
 3.750E-01  0.000E+00 0.000E+00 0.000E+00 0.000E+00 0.000E+00 0.000E+00 0.000E+00 0.000E+00 0.000E+00 0.000E+00 0.000E+00 0.000E+00
 5.750E-01  0.000E+00 0.000E+00 0.000E+00 0.000E+00 0.000E+00 0.000E+00 0.000E+00 0.000E+00 0.000E+00 0.000E+00 0.000E+00 0.000E+00
 8.500E-01  0.000E+00 0.000E+00 0.000E+00 0.000E+00 0.000E+00 0.000E+00 0.000E+00 0.000E+00 0.000E+00 0.000E+00 0.000E+00 0.000E+00
 1.250E+00  0.000E+00 0.000E+00 0.000E+00 0.000E+00 0.000E+00 0.000E+00 0.000E+00 0.000E+00 0.000E+00 0.000E+00 0.000E+00 0.000E+00
 1.750E+00  0.000E+00 0.000E+00 0.000E+00 0.000E+00 0.000E+00 0.000E+00 0.000E+00 0.000E+00 0.000E+00 0.000E+00 0.000E+00 0.000E+00
 2.250E+00  0.000E+00 0.000E+00 0.000E+00 0.000E+00 0.000E+00 0.000E+00 0.000E+00 0.000E+00 0.000E+00 0.000E+00 0.000E+00 0.000E+00
 2.750E+00  0.000E+00 0.000E+00 0.000E+00 0.000E+00 0.000E+00 0.000E+00 0.000E+00 0.000E+00 0.000E+00 0.000E+00 0.000E+00 0.000E+00
 3.500E+00  0.000E+00 0.000E+00 0.000E+00 0.000E+00 0.000E+00 0.000E+00 0.000E+00 0.000E+00 0.000E+00 0.000E+00 0.000E+00 0.000E+00
 5.000E+00  0.000E+00 0.000E+00 0.000E+00 0.000E+00 0.000E+00 0.000E+00 0.000E+00 0.000E+00 0.000E+00 0.000E+00 0.000E+00 0.000E+00
 7.000E+00  0.000E+00 0.000E+00 0.000E+00 0.000E+00 0.000E+00 0.000E+00 0.000E+00 0.000E+00 0.000E+00 0.000E+00 0.000E+00 0.000E+00
 9.500E+00  0.000E+00 0.000E+00 0.000E+00 0.000E+00 0.000E+00 0.000E+00 0.000E+00 0.000E+00 0.000E+00 0.000E+00 0.000E+00 0.000E+00
0  TOTAL    0.000E+00 0.000E+00 0.000E+00 0.000E+00 0.000E+00 0.000E+00 0.000E+00 0.000E+00 0.000E+00 0.000E+00 0.000E+00 0.000E+00
0MEV/SEC    0.000E+00 0.000E+00 0.000E+00 0.000E+00 0.000E+00 0.000E+00 0.000E+00 0.000E+00 0.000E+00 0.000E+00 0.000E+00 0.000E+00
0                                 18 GROUP SPECIFIC ENERGY RELEASE RATES, MEV/WATT-SEC
                                  BASIS=[illegible]
  EMEAN
            0 HR      1 HR      2 HR      4 HR      8 HR      12 HR     24 HR     48 HR     72 HR     96 HR     144 HR    288 HR
 1.000E-02  0.000E+00 0.000E+00 0.000E+00 0.000E+00 0.000E+00 0.000E+00 0.000E+00 0.000E+00 0.000E+00 0.000E+00 0.000E+00 0.000E+00
 2.500E-02  0.000E+00 0.000E+00 0.000E+00 0.000E+00 0.000E+00 0.000E+00 0.000E+00 0.000E+00 0.000E+00 0.000E+00 0.000E+00 0.000E+00
 3.750E-02  0.000E+00 0.000E+00 0.000E+00 0.000E+00 0.000E+00 0.000E+00 0.000E+00 0.000E+00 0.000E+00 0.000E+00 0.000E+00 0.000E+00
```

5.750E-02	0.000E+00	0.000E+00	0.000E+00	0.000E+00	0.000E+00	0.000E+00	0.000E+00	0.000E+00	0.000E+00	0.000E+00	0.000E+00	0.000E+00
8.500E-02	0.000E+00	0.000E+00	0.000E+00	0.000E+00	0.000E+00	0.000E+00	0.000E+00	0.000E+00	0.000E+00	0.000E+00	0.000E+00	0.000E+00
1.250E-01	0.000E+00	0.000E+00	0.000E+00	0.000E+00	0.000E+00	0.000E+00	0.000E+00	0.000E+00	0.000E+00	0.000E+00	0.000E+00	0.000E+00
2.250E-01	0.000E+00	0.000E+00	0.000E+00	0.000E+00	0.000E+00	0.000E+00	0.000E+00	0.000E+00	0.000E+00	0.000E+00	0.000E+00	0.000E+00
3.750E-01	0.000E+00	0.000E+00	0.000E+00	0.000E+00	0.000E+00	0.000E+00	0.000E+00	0.000E+00	0.000E+00	0.000E+00	0.000E+00	0.000E+00
5.750E-01	0.000E+00	0.000E+00	0.000E+00	0.000E+00	0.000E+00	0.000E+00	0.000E+00	0.000E+00	0.000E+00	0.000E+00	0.000E+00	0.000E+00
8.500E-01	0.000E+00	0.000E+00	0.000E+00	0.000E+00	0.000E+00	0.000E+00	0.000E+00	0.000E+00	0.000E+00	0.000E+00	0.000E+00	0.000E+00
1.250E+00	0.000E+00	0.000E+00	0.000E+00	0.000E+00	0.000E+00	0.000E+00	0.000E+00	0.000E+00	0.000E+00	0.000E+00	0.000E+00	0.000E+00
1.750E+00	0.000E+00	0.000E+00	0.000E+00	0.000E+00	0.000E+00	0.000E+00	0.000E+00	0.000E+00	0.000E+00	0.000E+00	0.000E+00	0.000E+00
2.250E+00	0.000E+00	0.000E+00	0.000E+00	0.000E+00	0.000E+00	0.000E+00	0.000E+00	0.000E+00	0.000E+00	0.000E+00	0.000E+00	0.000E+00
2.750E+00	0.000E+00	0.000E+00	0.000E+00	0.000E+00	0.000E+00	0.000E+00	0.000E+00	0.000E+00	0.000E+00	0.000E+00	0.000E+00	0.000E+00
3.500E+00	0.000E+00	0.000E+00	0.000E+00	0.000E+00	0.000E+00	0.000E+00	0.000E+00	0.000E+00	0.000E+00	0.000E+00	0.000E+00	0.000E+00
5.000E+00	0.000E+00	0.000E+00	0.000E+00	0.000E+00	0.000E+00	0.000E+00	0.000E+00	0.000E+00	0.000E+00	0.000E+00	0.000E+00	0.000E+00
7.000E+00	0.000E+00	0.000E+00	0.000E+00	0.000E+00	0.000E+00	0.000E+00	0.000E+00	0.000E+00	0.000E+00	0.000E+00	0.000E+00	0.000E+00
9.500E+00	0.000E+00	0.000E+00	0.000E+00	0.000E+00	0.000E+00	0.000E+00	0.000E+00	0.000E+00	0.000E+00	0.000E+00	0.000E+00	0.000E+00
0 TOTAL	0.000E+00	0.000E+00	0.000E+00	0.000E+00	0.000E+00	0.000E+00	0.000E+00	0.000E+00	0.000E+00	0.000E+00	0.000E+00	0.000E+00
0 GAM POW	0.000E+00	0.000E+00	0.000E+00	0.000E+00	0.000E+00	0.000E+00	0.000E+00	0.000E+00	0.000E+00	0.000E+00	0.000E+00	0.000E+00

1 OUTPUT UNIT = 11 PAGE 45

ORIGEN2 V2.1 (8-1-91), Run on 03/10/04 at 13:15:17

1 OUTPUT UNIT = 11 PAGE 46

ORIGEN2 V2.1 (8-1-91), Run on 03/10/04 at 13:15:17

PHOTON SPECTRUM FOR ACTINIDES + DAUGHTERS

0 Decay of containment activity on a per cc basis

POWER= 1.00 MW, BURNUP= 1. MWD, FLUX= 1.00E+00 N/CM**2-SEC

0 18 GROUP PHOTON RELEASE RATES, PHOTONS/SECOND

BASIS=□□

EMEAN	0 HR	1 HR	2 HR	4 HR	8 HR	12 HR	24 HR	48 HR	72 HR	96 HR	144 HR	288 HR
1.000E-02	0.000E+00	0.000E+00	0.000E+00	0.000E+00	0.000E+00	0.000E+00	0.000E+00	0.000E+00	0.000E+00	0.000E+00	0.000E+00	0.000E+00
2.500E-02	0.000E+00	0.000E+00	0.000E+00	0.000E+00	0.000E+00	0.000E+00	0.000E+00	0.000E+00	0.000E+00	0.000E+00	0.000E+00	0.000E+00
3.750E-02	0.000E+00	0.000E+00	0.000E+00	0.000E+00	0.000E+00	0.000E+00	0.000E+00	0.000E+00	0.000E+00	0.000E+00	0.000E+00	0.000E+00
5.750E-02	0.000E+00	0.000E+00	0.000E+00	0.000E+00	0.000E+00	0.000E+00	0.000E+00	0.000E+00	0.000E+00	0.000E+00	0.000E+00	0.000E+00
8.500E-02	0.000E+00	0.000E+00	0.000E+00	0.000E+00	0.000E+00	0.000E+00	0.000E+00	0.000E+00	0.000E+00	0.000E+00	0.000E+00	0.000E+00
1.250E-01	0.000E+00	0.000E+00	0.000E+00	0.000E+00	0.000E+00	0.000E+00	0.000E+00	0.000E+00	0.000E+00	0.000E+00	0.000E+00	0.000E+00
2.250E-01	0.000E+00	0.000E+00	0.000E+00	0.000E+00	0.000E+00	0.000E+00	0.000E+00	0.000E+00	0.000E+00	0.000E+00	0.000E+00	0.000E+00
3.750E-01	0.000E+00	0.000E+00	0.000E+00	0.000E+00	0.000E+00	0.000E+00	0.000E+00	0.000E+00	0.000E+00	0.000E+00	0.000E+00	0.000E+00
5.750E-01	0.000E+00	0.000E+00	0.000E+00	0.000E+00	0.000E+00	0.000E+00	0.000E+00	0.000E+00	0.000E+00	0.000E+00	0.000E+00	0.000E+00
8.500E-01	0.000E+00	0.000E+00	0.000E+00	0.000E+00	0.000E+00	0.000E+00	0.000E+00	0.000E+00	0.000E+00	0.000E+00	0.000E+00	0.000E+00
1.250E+00	0.000E+00	0.000E+00	0.000E+00	0.000E+00	0.000E+00	0.000E+00	0.000E+00	0.000E+00	0.000E+00	0.000E+00	0.000E+00	0.000E+00
1.750E+00	0.000E+00	0.000E+00	0.000E+00	0.000E+00	0.000E+00	0.000E+00	0.000E+00	0.000E+00	0.000E+00	0.000E+00	0.000E+00	0.000E+00
2.250E+00	0.000E+00	0.000E+00	0.000E+00	0.000E+00	0.000E+00	0.000E+00	0.000E+00	0.000E+00	0.000E+00	0.000E+00	0.000E+00	0.000E+00
2.750E+00	0.000E+00	0.000E+00	0.000E+00	0.000E+00	0.000E+00	0.000E+00	0.000E+00	0.000E+00	0.000E+00	0.000E+00	0.000E+00	0.000E+00
3.500E+00	0.000E+00	0.000E+00	0.000E+00	0.000E+00	0.000E+00	0.000E+00	0.000E+00	0.000E+00	0.000E+00	0.000E+00	0.000E+00	0.000E+00
5.000E+00	0.000E+00	0.000E+00	0.000E+00	0.000E+00	0.000E+00	0.000E+00	0.000E+00	0.000E+00	0.000E+00	0.000E+00	0.000E+00	0.000E+00
7.000E+00	0.000E+00	0.000E+00	0.000E+00	0.000E+00	0.000E+00	0.000E+00	0.000E+00	0.000E+00	0.000E+00	0.000E+00	0.000E+00	0.000E+00
9.500E+00	0.000E+00	0.000E+00	0.000E+00	0.000E+00	0.000E+00	0.000E+00	0.000E+00	0.000E+00	0.000E+00	0.000E+00	0.000E+00	0.000E+00
0 TOTAL	0.000E+00	0.000E+00	0.000E+00	0.000E+00	0.000E+00	0.000E+00	0.000E+00	0.000E+00	0.000E+00	0.000E+00	0.000E+00	0.000E+00
0MEV/SEC	0.000E+00	0.000E+00	0.000E+00	0.000E+00	0.000E+00	0.000E+00	0.000E+00	0.000E+00	0.000E+00	0.000E+00	0.000E+00	0.000E+00

0 18 GROUP SPECIFIC ENERGY RELEASE RATES, MEV/WATT-SEC

BASIS=□□

EMEAN	0 HR	1 HR	2 HR	4 HR	8 HR	12 HR	24 HR	48 HR	72 HR	96 HR	144 HR	288 HR
1.000E-02	0.000E+00	0.000E+00	0.000E+00	0.000E+00	0.000E+00	0.000E+00	0.000E+00	0.000E+00	0.000E+00	0.000E+00	0.000E+00	0.000E+00
2.500E-02	0.000E+00	0.000E+00	0.000E+00	0.000E+00	0.000E+00	0.000E+00	0.000E+00	0.000E+00	0.000E+00	0.000E+00	0.000E+00	0.000E+00
3.750E-02	0.000E+00	0.000E+00	0.000E+00	0.000E+00	0.000E+00	0.000E+00	0.000E+00	0.000E+00	0.000E+00	0.000E+00	0.000E+00	0.000E+00
5.750E-02	0.000E+00	0.000E+00	0.000E+00	0.000E+00	0.000E+00	0.000E+00	0.000E+00	0.000E+00	0.000E+00	0.000E+00	0.000E+00	0.000E+00
8.500E-02	0.000E+00	0.000E+00	0.000E+00	0.000E+00	0.000E+00	0.000E+00	0.000E+00	0.000E+00	0.000E+00	0.000E+00	0.000E+00	0.000E+00
1.250E-01	0.000E+00	0.000E+00	0.000E+00	0.000E+00	0.000E+00	0.000E+00	0.000E+00	0.000E+00	0.000E+00	0.000E+00	0.000E+00	0.000E+00

2.250E-01	0.000E+00	0.000E+00	0.000E+00	0.000E+00	0.000E+00	0.000E+00	0.000E+00	0.000E+00	0.000E+00	0.000E+00	0.000E+00	0.000E+00
3.750E-01	0.000E+00	0.000E+00	0.000E+00	0.000E+00	0.000E+00	0.000E+00	0.000E+00	0.000E+00	0.000E+00	0.000E+00	0.000E+00	0.000E+00
5.750E-01	0.000E+00	0.000E+00	0.000E+00	0.000E+00	0.000E+00	0.000E+00	0.000E+00	0.000E+00	0.000E+00	0.000E+00	0.000E+00	0.000E+00
8.500E-01	0.000E+00	0.000E+00	0.000E+00	0.000E+00	0.000E+00	0.000E+00	0.000E+00	0.000E+00	0.000E+00	0.000E+00	0.000E+00	0.000E+00
1.250E+00	0.000E+00	0.000E+00	0.000E+00	0.000E+00	0.000E+00	0.000E+00	0.000E+00	0.000E+00	0.000E+00	0.000E+00	0.000E+00	0.000E+00
1.750E+00	0.000E+00	0.000E+00	0.000E+00	0.000E+00	0.000E+00	0.000E+00	0.000E+00	0.000E+00	0.000E+00	0.000E+00	0.000E+00	0.000E+00
2.250E+00	0.000E+00	0.000E+00	0.000E+00	0.000E+00	0.000E+00	0.000E+00	0.000E+00	0.000E+00	0.000E+00	0.000E+00	0.000E+00	0.000E+00
2.750E+00	0.000E+00	0.000E+00	0.000E+00	0.000E+00	0.000E+00	0.000E+00	0.000E+00	0.000E+00	0.000E+00	0.000E+00	0.000E+00	0.000E+00
3.500E+00	0.000E+00	0.000E+00	0.000E+00	0.000E+00	0.000E+00	0.000E+00	0.000E+00	0.000E+00	0.000E+00	0.000E+00	0.000E+00	0.000E+00
5.000E+00	0.000E+00	0.000E+00	0.000E+00	0.000E+00	0.000E+00	0.000E+00	0.000E+00	0.000E+00	0.000E+00	0.000E+00	0.000E+00	0.000E+00
7.000E+00	0.000E+00	0.000E+00	0.000E+00	0.000E+00	0.000E+00	0.000E+00	0.000E+00	0.000E+00	0.000E+00	0.000E+00	0.000E+00	0.000E+00
9.500E+00	0.000E+00	0.000E+00	0.000E+00	0.000E+00	0.000E+00	0.000E+00	0.000E+00	0.000E+00	0.000E+00	0.000E+00	0.000E+00	0.000E+00
0 TOTAL	0.000E+00	0.000E+00	0.000E+00	0.000E+00	0.000E+00	0.000E+00	0.000E+00	0.000E+00	0.000E+00	0.000E+00	0.000E+00	0.000E+00
0 GAM POW	0.000E+00	0.000E+00	0.000E+00	0.000E+00	0.000E+00	0.000E+00	0.000E+00	0.000E+00	0.000E+00	0.000E+00	0.000E+00	0.000E+00

1 OUTPUT UNIT = 11 PAGE 47

ORIGEN2 V2.1 (8-1-91), Run on 03/10/04 at 13:15:17

1 OUTPUT UNIT = 11 PAGE 48

ORIGEN2 V2.1 (8-1-91), Run on 03/10/04 at 13:15:17

PHOTON SPECTRUM FOR FISSION PRODUCTS

0 Decay of containment activity on a per cc basis

POWER= 1.00 MW, BURNUP= 1. MWD, FLUX= 1.00E+00 N/CM**2-SEC

0 18 GROUP PHOTON RELEASE RATES, PHOTONS/SECOND

BASIS=

EMEAN	0 HR	1 HR	2 HR	4 HR	8 HR	12 HR	24 HR	48 HR	72 HR	96 HR	144 HR	288 HR
1.000E-02	3.163E+07	2.672E+07	2.109E+07	1.522E+07	1.057E+07	8.512E+06	5.882E+06	3.924E+06	3.138E+06	2.717E+06	2.226E+06	1.470E+06
2.500E-02	7.875E+06	6.759E+06	5.465E+06	4.107E+06	3.014E+06	2.524E+06	1.887E+06	1.393E+06	1.160E+06	1.013E+06	8.174E+05	5.069E+05
3.750E-02	1.118E+07	1.043E+07	9.638E+06	8.836E+06	8.181E+06	7.845E+06	7.215E+06	6.333E+06	5.632E+06	5.013E+06	3.963E+06	1.993E+06
5.750E-02	5.807E+06	5.114E+06	3.981E+06	2.793E+06	1.868E+06	1.473E+06	9.927E+05	6.506E+05	5.183E+05	4.512E+05	3.778E+05	2.655E+05
8.500E-02	9.280E+06	8.919E+06	8.216E+06	7.468E+06	6.871E+06	6.595E+06	6.152E+06	5.499E+06	4.904E+06	4.355E+06	3.411E+06	1.629E+06
1.250E-01	3.055E+06	2.420E+06	1.704E+06	1.041E+06	6.076E+05	4.437E+05	2.644E+05	1.494E+05	1.080E+05	8.904E+04	7.173E+04	5.106E+04
2.250E-01	1.844E+07	1.265E+07	1.157E+07	1.072E+07	9.696E+06	8.647E+06	5.504E+06	2.205E+06	1.343E+06	1.101E+06	9.062E+05	5.735E+05
3.750E-01	2.208E+07	1.565E+07	1.365E+07	1.199E+07	1.088E+07	1.041E+07	9.639E+06	8.712E+06	7.972E+06	7.313E+06	6.168E+06	3.717E+06
5.750E-01	5.081E+07	4.310E+07	3.593E+07	2.818E+07	2.161E+07	1.864E+07	1.449E+07	1.083E+07	9.254E+06	8.520E+06	7.963E+06	7.570E+06
8.500E-01	5.413E+07	3.295E+07	2.179E+07	1.246E+07	7.544E+06	6.173E+06	5.120E+06	4.614E+06	4.405E+06	4.285E+06	4.142E+06	3.886E+06
1.250E+00	2.195E+07	1.933E+07	1.451E+07	1.023E+07	6.672E+06	4.740E+06	2.227E+06	1.188E+06	1.001E+06	9.225E+05	8.304E+05	6.594E+05
1.750E+00	9.790E+06	6.378E+06	4.960E+06	3.383E+06	1.889E+06	1.142E+06	2.959E+05	2.425E+04	2.741E+03	9.493E+02	7.064E+02	5.110E+02
2.250E+00	7.053E+06	3.883E+06	2.770E+06	1.660E+06	6.826E+05	3.021E+05	4.134E+04	2.550E+03	2.037E+02	1.644E+01	1.073E-01	2.975E-08
2.750E+00	5.893E+05	6.264E+05	3.541E+05	1.364E+05	3.399E+04	1.103E+04	5.473E+02	1.550E+00	4.413E-03	1.264E-05	1.028E-10	5.088E-26
3.500E+00	2.001E+04	5.268E+04	3.634E+04	1.860E+04	6.298E+03	2.304E+03	1.215E+02	3.463E-01	9.870E-04	2.827E-06	2.300E-11	1.116E-26
5.000E+00	0.000E+00	7.044E+03	6.020E+03	3.692E+03	1.388E+03	5.226E+02	2.790E+01	7.957E-02	2.268E-04	6.495E-07	5.285E-12	2.564E-27
7.000E+00	0.000E+00	0.000E+00	0.000E+00	0.000E+00	0.000E+00	0.000E+00	0.000E+00	0.000E+00	0.000E+00	0.000E+00	0.000E+00	0.000E+00
9.500E+00	0.000E+00	0.000E+00	0.000E+00	0.000E+00	0.000E+00	0.000E+00	0.000E+00	0.000E+00	0.000E+00	0.000E+00	0.000E+00	0.000E+00
0 TOTAL	2.537E+08	1.950E+08	1.557E+08	1.183E+08	9.013E+07	7.745E+07	5.971E+07	4.552E+07	3.944E+07	3.578E+07	3.088E+07	2.232E+07
0MEV/SEC	1.522E+08	1.097E+08	8.293E+07	5.812E+07	3.966E+07	3.160E+07	2.192E+07	1.628E+07	1.434E+07	1.333E+07	1.217E+07	1.027E+07

0 18 GROUP SPECIFIC ENERGY RELEASE RATES, MEV/WATT-SEC

BASIS=

EMEAN	0 HR	1 HR	2 HR	4 HR	8 HR	12 HR	24 HR	48 HR	72 HR	96 HR	144 HR	288 HR
1.000E-02	3.163E-01	2.672E-01	2.109E-01	1.522E-01	1.057E-01	8.512E-02	5.882E-02	3.924E-02	3.138E-02	2.717E-02	2.226E-02	1.470E-02
2.500E-02	1.969E-01	1.690E-01	1.366E-01	1.027E-01	7.536E-02	6.309E-02	4.716E-02	3.481E-02	2.901E-02	2.532E-02	2.044E-02	1.267E-02
3.750E-02	4.193E-01	3.910E-01	3.614E-01	3.313E-01	3.068E-01	2.942E-01	2.706E-01	2.375E-01	2.112E-01	1.880E-01	1.486E-01	7.476E-02
5.750E-02	3.339E-01	2.940E-01	2.289E-01	1.606E-01	1.074E-01	8.471E-02	5.708E-02	3.741E-02	2.980E-02	2.594E-02	2.172E-02	1.526E-02
8.500E-02	7.888E-01	7.581E-01	6.984E-01	6.348E-01	5.840E-01	5.605E-01	5.230E-01	4.674E-01	4.168E-01	3.701E-01	2.899E-01	1.384E-01
1.250E-01	3.819E-01	3.025E-01	2.130E-01	1.301E-01	7.595E-02	5.546E-02	3.305E-02	1.868E-02	1.350E-02	1.113E-02	8.966E-03	6.382E-03
2.250E-01	4.150E+00	2.846E+00	2.604E+00	2.412E+00	2.182E+00	1.946E+00	1.238E+00	4.961E-01	3.022E-01	2.476E-01	2.039E-01	1.290E-01
3.750E-01	8.280E+00	5.868E+00	5.120E+00	4.496E+00	4.082E+00	3.902E+00	3.615E+00	3.267E+00	2.989E+00	2.742E+00	2.313E+00	1.394E+00
5.750E-01	2.921E+01	2.479E+01	2.066E+01	1.620E+01	1.242E+01	1.072E+01	8.331E+00	6.227E+00	5.321E+00	4.899E+00	4.579E+00	4.353E+00

8.500E-01	4.601E+01	2.801E+01	1.852E+01	1.059E+01	6.412E+00	5.247E+00	4.352E+00	3.922E+00	3.744E+00	3.642E+00	3.521E+00	3.303E+00
1.250E+00	2.744E+01	2.416E+01	1.813E+01	1.279E+01	8.340E+00	5.925E+00	2.784E+00	1.484E+00	1.252E+00	1.153E+00	1.038E+00	8.242E-01
1.750E+00	1.713E+01	1.116E+01	8.680E+00	5.920E+00	3.306E+00	1.998E+00	5.179E-01	4.244E-02	4.797E-03	1.661E-03	1.236E-03	8.943E-04
2.250E+00	1.587E+01	8.738E+00	6.231E+00	3.736E+00	1.536E+00	6.798E-01	9.302E-02	5.737E-03	4.583E-04	3.700E-05	2.413E-07	6.694E-14
2.750E+00	1.620E+00	1.723E+00	9.738E-01	3.752E-01	9.346E-02	3.033E-02	1.505E-03	4.263E-06	1.213E-08	3.476E-11	2.828E-16	1.399E-31
3.500E+00	7.003E-02	1.844E-01	1.272E-01	6.510E-02	2.204E-02	8.063E-03	4.252E-04	1.212E-06	3.454E-09	9.895E-12	8.051E-17	3.905E-32
5.000E+00	0.000E+00	3.522E-02	3.010E-02	1.846E-02	6.940E-03	2.613E-03	1.395E-04	3.978E-07	1.134E-09	3.248E-12	2.643E-17	1.282E-32
7.000E+00	0.000E+00	0.000E+00	0.000E+00	0.000E+00	0.000E+00	0.000E+00	0.000E+00	0.000E+00	0.000E+00	0.000E+00	0.000E+00	0.000E+00
9.500E+00	0.000E+00	0.000E+00	0.000E+00	0.000E+00	0.000E+00	0.000E+00	0.000E+00	0.000E+00	0.000E+00	0.000E+00	0.000E+00	0.000E+00
0 TOTAL	1.522E+02	1.097E+02	8.293E+01	5.812E+01	3.966E+01	3.160E+01	2.192E+01	1.628E+01	1.434E+01	1.333E+01	1.217E+01	1.027E+01
0 GAM POW	2.440E-05	1.758E-05	1.329E-05	9.317E-06	6.357E-06	5.065E-06	3.514E-06	2.610E-06	2.299E-06	2.137E-06	1.950E-06	1.646E-06

1 OUTPUT UNIT = 11 PAGE 49

ORIGEN2 V2.1 (8-1-91), Run on 03/10/04 at 13:15:17

0 PRINCIPAL PHOTON SOURCES IN GROUP 1,PHOTONS/SEC
MEAN ENERGY= 0.010MEV

NUCLIDE	0 HR	1 HR	2 HR	4 HR	8 HR	12 HR	24 HR	48 HR	72 HR	96 HR	144 HR	288 HR
KR 85	2.793E+04	2.793E+04	2.793E+04	2.793E+04	2.793E+04	2.793E+04	2.793E+04	2.793E+04	2.792E+04	2.792E+04	2.791E+04	2.788E+04
KR 85M	3.804E+05	3.259E+05	2.792E+05	2.049E+05	1.104E+05	5.944E+04	9.286E+03	2.266E+02	5.532E+00	1.350E-01	8.045E-05	1.701E-14
KR 87	3.143E+06	1.822E+06	1.057E+06	3.552E+05	4.014E+04	4.536E+03	6.527E+00	1.360E-05	2.832E-11	5.900E-17	0.000E+00	0.000E+00
KR 88	1.814E+06	1.421E+06	1.113E+06	6.832E+05	2.573E+05	9.688E+04	5.173E+03	1.474E+01	4.201E-02	1.205E-04	9.799E-10	5.177E-25
RB 88	0.000E+00	5.169E+06	4.548E+06	2.834E+06	1.068E+06	4.020E+05	2.146E+04	6.120E+01	1.744E-01	4.996E-04	4.065E-09	1.972E-24
I131	1.338E+06	1.333E+06	1.328E+06	1.319E+06	1.300E+06	1.281E+06	1.227E+06	1.126E+06	1.033E+06	9.475E+05	7.975E+05	4.754E+05
I132	3.223E+06	2.385E+06	1.764E+06	9.656E+05	2.892E+05	8.664E+04	2.329E+03	1.682E+00	1.216E-03	8.782E-07	4.584E-13	0.000E+00
I133	3.809E+06	3.684E+06	3.563E+06	3.333E+06	2.917E+06	2.553E+06	1.712E+06	7.693E+05	3.457E+05	1.554E+05	3.139E+04	2.586E+02
XE133	1.284E+06	1.284E+06	1.283E+06	1.282E+06	1.278E+06	1.270E+06	1.236E+06	1.135E+06	1.019E+06	9.049E+05	7.034E+05	3.213E+05
I134	6.465E+06	2.932E+06	1.330E+06	2.736E+05	1.158E+04	4.898E+02	3.711E-02	2.130E-10	1.222E-18	0.000E+00	0.000E+00	0.000E+00
CS134	3.469E+05	3.469E+05	3.469E+05	3.469E+05	3.468E+05	3.468E+05	3.466E+05	3.463E+05	3.460E+05	3.457E+05	3.450E+05	3.431E+05
I135	3.155E+06	2.841E+06	2.558E+06	2.074E+06	1.364E+06	8.966E+05	2.548E+05	2.058E+04	1.662E+03	1.342E+02	8.753E-01	2.428E-07
XE135	7.305E+05	8.680E+05	9.737E+05	1.114E+06	1.197E+06	1.130E+06	6.897E+05	1.567E+05	2.886E+04	4.928E+03	1.326E+02	2.288E-03
CS136	6.663E+04	6.648E+04	6.633E+04	6.604E+04	6.546E+04	6.489E+04	6.319E+04	5.994E+04	5.685E+04	5.392E+04	4.851E+04	3.531E+04
CS137	2.423E+05	2.423E+05	2.423E+05	2.423E+05	2.423E+05	2.423E+05	2.422E+05	2.422E+05	2.422E+05	2.422E+05	2.422E+05	2.421E+05
XE138	5.550E+06	2.949E+05	1.567E+04	4.425E+01	3.526E-04	2.810E-09	1.462E-24	0.000E+00	0.000E+00	0.000E+00	0.000E+00	0.000E+00
CS138	0.000E+00	1.620E+06	5.313E+05	4.163E+04	2.379E+02	1.358E+00	2.522E-07	8.700E-21	0.000E+00	0.000E+00	0.000E+00	0.000E+00

0 PRINCIPAL PHOTON SOURCES IN GROUP 2,PHOTONS/SEC
MEAN ENERGY= 0.025MEV

NUCLIDE	0 HR	1 HR	2 HR	4 HR	8 HR	12 HR	24 HR	48 HR	72 HR	96 HR	144 HR	288 HR
KR 85	5.473E+03	5.473E+03	5.473E+03	5.474E+03	5.474E+03	5.473E+03	5.473E+03	5.472E+03	5.471E+03	5.470E+03	5.468E+03	5.462E+03
KR 87	6.869E+05	3.983E+05	2.309E+05	7.763E+04	8.773E+03	9.914E+02	1.427E+00	2.972E-06	6.190E-12	1.289E-17	0.000E+00	0.000E+00
KR 88	3.673E+05	2.878E+05	2.254E+05	1.383E+05	5.209E+04	1.962E+04	1.048E+03	2.985E+00	8.506E-03	2.440E-05	1.984E-10	1.048E-25
RB 88	0.000E+00	1.159E+06	1.020E+06	6.352E+05	2.393E+05	9.012E+04	4.811E+03	1.372E+01	3.910E-02	1.120E-04	9.113E-10	4.420E-25
I131	8.237E+05	8.207E+05	8.178E+05	8.119E+05	8.003E+05	7.889E+05	7.556E+05	6.932E+05	6.360E+05	5.834E+05	4.910E+05	2.927E+05
XE131M	4.337E+04	4.344E+04	4.351E+04	4.364E+04	4.390E+04	4.415E+04	4.482E+04	4.587E+04	4.656E+04	4.694E+04	4.692E+04	4.283E+04
I132	7.685E+05	5.685E+05	4.206E+05	2.302E+05	6.896E+04	2.066E+04	5.552E+02	4.011E-01	2.898E-04	2.094E-07	1.093E-13	0.000E+00
I133	7.775E+05	7.521E+05	7.274E+05	6.805E+05	5.956E+05	5.213E+05	3.494E+05	1.571E+05	7.058E+04	3.172E+04	6.407E+03	5.279E+01
XE133	1.526E+05	1.526E+05	1.526E+05	1.524E+05	1.519E+05	1.510E+05	1.469E+05	1.349E+05	1.211E+05	1.076E+05	8.364E+04	3.821E+04
XE133M	2.681E+05	2.678E+05	2.674E+05	2.663E+05	2.631E+05	2.587E+05	2.409E+05	1.960E+05	1.520E+05	1.149E+05	6.318E+04	9.647E+03
I134	1.546E+06	7.013E+05	3.181E+05	6.543E+04	2.769E+03	1.172E+02	8.875E-03	5.094E-11	2.924E-19	0.000E+00	0.000E+00	0.000E+00
CS134	6.572E+04	6.572E+04	6.571E+04	6.571E+04	6.570E+04	6.569E+04	6.566E+04	6.560E+04	6.554E+04	6.548E+04	6.536E+04	6.500E+04
I135	6.399E+05	5.762E+05	5.189E+05	4.207E+05	2.766E+05	1.818E+05	5.168E+04	4.173E+03	3.370E+02	2.722E+01	1.775E-01	4.925E-08
XE135	1.437E+05	1.707E+05	1.915E+05	2.192E+05	2.355E+05	2.222E+05	1.357E+05	3.083E+04	5.676E+03	9.694E+02	2.608E+01	4.501E-04
XE135M	4.036E+05	2.840E+05	2.505E+05	2.028E+05	1.333E+05	8.765E+04	2.491E+04	2.012E+03	1.625E+02	1.312E+01	8.557E-02	2.374E-08
CS137	4.581E+04	4.581E+04	4.581E+04	4.581E+04	4.581E+04	4.581E+04	4.580E+04	4.580E+04	4.580E+04	4.580E+04	4.579E+04	4.577E+04
XE138	1.080E+06	5.738E+04	3.049E+03	8.611E+00	6.862E-05	5.468E-10	2.845E-25	0.000E+00	0.000E+00	0.000E+00	0.000E+00	0.000E+00
CS138	0.000E+00	3.527E+05	1.157E+05	9.064E+03	5.179E+01	2.956E-01	5.490E-08	1.894E-21	0.000E+00	0.000E+00	0.000E+00	0.000E+00

1 OUTPUT UNIT = 11 PAGE 50

ORIGEN2 V2.1 (8-1-91), Run on 03/10/04 at 13:15:17

0 PRINCIPAL PHOTON SOURCES IN GROUP 3,PHOTONS/SEC
MEAN ENERGY= 0.038MEV

NUCLIDE	0 HR	1 HR	2 HR	4 HR	8 HR	12 HR	24 HR	48 HR	72 HR	96 HR	144 HR	288 HR
KR 87	4.593E+05	2.663E+05	1.544E+05	5.190E+04	5.865E+03	6.629E+02	9.538E-01	1.987E-06	4.139E-12	8.621E-18	0.000E+00	0.000E+00
KR 88	1.590E+05	1.245E+05	9.754E+04	5.986E+04	2.254E+04	8.488E+03	4.533E+02	1.292E+00	3.681E-03	1.056E-05	8.586E-11	4.536E-26
RB 88	0.000E+00	7.882E+05	6.936E+05	4.321E+05	1.628E+05	6.131E+04	3.273E+03	9.334E+00	2.660E-02	7.620E-05	6.200E-10	3.007E-25
I131	2.527E+05	2.518E+05	2.509E+05	2.491E+05	2.455E+05	2.420E+05	2.318E+05	2.127E+05	1.951E+05	1.790E+05	1.506E+05	8.980E+04
I132	4.506E+05	3.334E+05	2.466E+05	1.350E+05	4.043E+04	1.211E+04	3.255E+02	2.352E-01	1.699E-04	1.228E-07	6.408E-14	0.000E+00
I133	4.994E+05	4.830E+05	4.672E+05	4.371E+05	3.825E+05	3.348E+05	2.244E+05	1.009E+05	4.533E+04	2.037E+04	4.115E+03	3.391E+01
XE133	6.261E+06	6.261E+06	6.260E+06	6.254E+06	6.232E+06	6.196E+06	6.028E+06	5.535E+06	4.970E+06	4.414E+06	3.431E+06	1.568E+06
I134	9.191E+05	4.168E+05	1.891E+05	3.889E+04	1.646E+03	6.963E+01	5.275E-03	3.028E-11	1.738E-19	0.000E+00	0.000E+00	0.000E+00
CS134	6.534E+04	6.533E+04	6.533E+04	6.533E+04	6.532E+04	6.531E+04	6.528E+04	6.522E+04	6.516E+04	6.510E+04	6.498E+04	6.462E+04
I135	4.103E+05	3.695E+05	3.327E+05	2.698E+05	1.774E+05	1.166E+05	3.314E+04	2.676E+03	2.161E+02	1.745E+01	1.138E-01	3.158E-08
XE135	2.623E+05	3.117E+05	3.497E+05	4.002E+05	4.300E+05	4.058E+05	2.477E+05	5.628E+04	1.036E+04	1.770E+03	4.762E+01	8.218E-04
CS136	1.489E+05	1.486E+05	1.483E+05	1.476E+05	1.463E+05	1.450E+05	1.412E+05	1.340E+05	1.271E+05	1.205E+05	1.084E+05	7.892E+04
CS137	2.793E+04	2.793E+04	2.792E+04	2.792E+04	2.792E+04	2.792E+04	2.792E+04	2.792E+04	2.792E+04	2.792E+04	2.791E+04	2.790E+04
BA137M	0.000E+00	1.509E+05	1.509E+05	1.509E+05	1.509E+05	1.509E+05	1.508E+05	1.508E+05	1.508E+05	1.508E+05	1.508E+05	1.507E+05
XE138	1.107E+06	5.884E+04	3.126E+03	8.829E+00	7.036E-05	5.607E-10	2.918E-25	0.000E+00	0.000E+00	0.000E+00	0.000E+00	0.000E+00
CS138	0.000E+00	2.366E+05	7.761E+04	6.081E+03	3.475E+01	1.983E-01	3.684E-08	1.271E-21	0.000E+00	0.000E+00	0.000E+00	0.000E+00

0 PRINCIPAL PHOTON SOURCES IN GROUP 4,PHOTONS/SEC
MEAN ENERGY= 0.058MEV

NUCLIDE	0 HR	1 HR	2 HR	4 HR	8 HR	12 HR	24 HR	48 HR	72 HR	96 HR	144 HR	288 HR
KR 85	4.567E+03	4.568E+03	4.568E+03	4.568E+03	4.568E+03	4.567E+03	4.567E+03	4.566E+03	4.566E+03	4.565E+03	4.563E+03	4.558E+03
KR 87	6.909E+05	4.006E+05	2.323E+05	7.808E+04	8.824E+03	9.972E+02	1.435E+00	2.989E-06	6.226E-12	1.297E-17	0.000E+00	0.000E+00
KR 88	2.252E+05	1.764E+05	1.382E+05	8.482E+04	3.194E+04	1.203E+04	6.423E+02	1.830E+00	5.215E-03	1.496E-05	1.217E-10	6.427E-26
RB 88	0.000E+00	1.197E+06	1.054E+06	6.565E+05	2.473E+05	9.314E+04	4.972E+03	1.418E+01	4.041E-02	1.158E-04	9.418E-10	4.568E-25
I131	1.957E+05	1.950E+05	1.943E+05	1.929E+05	1.902E+05	1.874E+05	1.795E+05	1.647E+05	1.511E+05	1.386E+05	1.167E+05	6.955E+04
I132	6.146E+05	4.547E+05	3.364E+05	1.841E+05	5.515E+04	1.652E+04	4.440E+02	3.208E-01	2.318E-04	1.674E-07	8.739E-14	0.000E+00
I133	6.985E+05	6.756E+05	6.535E+05	6.114E+05	5.351E+05	4.683E+05	3.139E+05	1.411E+05	6.341E+04	2.850E+04	5.756E+03	4.743E+01
XE133	1.005E+05	1.005E+05	1.005E+05	1.004E+05	1.000E+05	9.945E+04	9.675E+04	8.883E+04	7.977E+04	7.084E+04	5.507E+04	2.516E+04
I134	1.272E+06	5.769E+05	2.617E+05	5.382E+04	2.278E+03	9.637E+01	7.301E-03	4.190E-11	2.405E-19	0.000E+00	0.000E+00	0.000E+00
CS134	5.235E+04	5.234E+04	5.234E+04	5.234E+04	5.233E+04	5.232E+04	5.230E+04	5.225E+04	5.220E+04	5.215E+04	5.206E+04	5.177E+04
I135	5.688E+05	5.122E+05	4.612E+05	3.740E+05	2.459E+05	1.616E+05	4.594E+04	3.710E+03	2.996E+02	2.419E+01	1.578E-01	4.377E-08
XE135	1.235E+05	1.468E+05	1.646E+05	1.884E+05	2.024E+05	1.910E+05	1.166E+05	2.650E+04	4.879E+03	8.332E+02	2.242E+01	3.869E-04
CS136	1.451E+05	1.448E+05	1.445E+05	1.438E+05	1.426E+05	1.413E+05	1.376E+05	1.305E+05	1.238E+05	1.174E+05	1.056E+05	7.690E+04
CS137	3.552E+04	3.552E+04	3.552E+04	3.552E+04	3.552E+04	3.552E+04	3.552E+04	3.551E+04	3.551E+04	3.551E+04	3.551E+04	3.549E+04
XE138	1.039E+06	5.523E+04	2.934E+03	8.288E+00	6.604E-05	5.263E-10	2.739E-25	0.000E+00	0.000E+00	0.000E+00	0.000E+00	0.000E+00
CS138	0.000E+00	3.504E+05	1.149E+05	9.005E+03	5.146E+01	2.937E-01	5.454E-08	1.882E-21	0.000E+00	0.000E+00	0.000E+00	0.000E+00

1 OUTPUT UNIT = 11 PAGE 51

ORIGEN2 V2.1 (8-1-91), Run on 03/10/04 at 13:15:17

0 PRINCIPAL PHOTON SOURCES IN GROUP 5,PHOTONS/SEC
MEAN ENERGY= 0.085MEV

NUCLIDE	0 HR	1 HR	2 HR	4 HR	8 HR	12 HR	24 HR	48 HR	72 HR	96 HR	144 HR	288 HR
KR 87	4.433E+05	2.570E+05	1.490E+05	5.010E+04	5.661E+03	6.398E+02	9.206E-01	1.918E-06	3.995E-12	8.321E-18	0.000E+00	0.000E+00
KR 88	1.331E+05	1.043E+05	8.169E+04	5.013E+04	1.888E+04	7.109E+03	3.796E+02	1.082E+00	3.082E-03	8.842E-06	7.190E-11	3.799E-26
RB 88	0.000E+00	7.839E+05	6.899E+05	4.298E+05	1.619E+05	6.097E+04	3.255E+03	9.283E+00	2.646E-02	7.578E-05	6.166E-10	2.991E-25
I131	4.050E+05	4.036E+05	4.021E+05	3.992E+05	3.936E+05	3.879E+05	3.716E+05	3.409E+05	3.127E+05	2.869E+05	2.415E+05	1.439E+05
I132	3.636E+05	2.690E+05	1.990E+05	1.089E+05	3.263E+04	9.773E+03	2.627E+02	1.898E-01	1.371E-04	9.906E-08	5.171E-14	0.000E+00
I133	4.030E+05	3.898E+05	3.770E+05	3.527E+05	3.087E+05	2.702E+05	1.811E+05	8.140E+04	3.658E+04	1.644E+04	3.321E+03	2.736E+01
XE133	5.604E+06	5.604E+06	5.603E+06	5.598E+06	5.578E+06	5.546E+06	5.395E+06	4.954E+06	4.448E+06	3.951E+06	3.071E+06	1.403E+06

```
 I134      7.671E+05 3.479E+05 1.578E+05 3.246E+04 1.373E+03 5.811E+01 4.403E-03 2.527E-11 1.450E-19 0.000E+00 0.000E+00 0.000E+00
CS134      2.697E+04 2.697E+04 2.697E+04 2.697E+04 2.697E+04 2.696E+04 2.695E+04 2.693E+04 2.690E+04 2.688E+04 2.683E+04 2.668E+04
 I135      3.259E+05 2.934E+05 2.642E+05 2.142E+05 1.409E+05 9.261E+04 2.632E+04 2.125E+03 1.716E+02 1.386E+01 9.041E-02 2.508E-08
XE135      6.820E+04 8.105E+04 9.092E+04 1.041E+05 1.118E+05 1.055E+05 6.440E+04 1.463E+04 2.694E+03 4.602E+02 1.238E+01 2.137E-04
CS136      6.386E+04 6.372E+04 6.358E+04 6.330E+04 6.274E+04 6.219E+04 6.057E+04 5.745E+04 5.449E+04 5.168E+04 4.649E+04 3.385E+04
CS137      1.771E+04 1.771E+04 1.771E+04 1.771E+04 1.771E+04 1.771E+04 1.771E+04 1.771E+04 1.771E+04 1.771E+04 1.770E+04 1.770E+04
XE138      6.334E+05 3.365E+04 1.788E+03 5.050E+00 4.024E-05 3.207E-10 1.669E-25 0.000E+00 0.000E+00 0.000E+00 0.000E+00 0.000E+00
CS138      0.000E+00 2.218E+05 7.276E+04 5.701E+03 3.258E+01 1.859E-01 3.453E-08 1.191E-21 0.000E+00 0.000E+00 0.000E+00 0.000E+00
0                    PRINCIPAL PHOTON SOURCES IN GROUP  6,PHOTONS/SEC
                      MEAN ENERGY= 0.125MEV

 NUCLIDE
            0 HR      1 HR      2 HR      4 HR      8 HR      12 HR     24 HR     48 HR     72 HR     96 HR     144 HR    288 HR
 KR 85      1.382E+03 1.382E+03 1.382E+03 1.382E+03 1.382E+03 1.382E+03 1.381E+03 1.381E+03 1.381E+03 1.381E+03 1.380E+03 1.379E+03
 RB 86      1.235E+03 1.233E+03 1.232E+03 1.228E+03 1.220E+03 1.213E+03 1.190E+03 1.147E+03 1.105E+03 1.065E+03 9.885E+02 7.910E+02
 KR 87      3.059E+05 1.774E+05 1.028E+05 3.457E+04 3.907E+03 4.415E+02 6.353E-01 1.323E-06 2.757E-12 5.742E-18 0.000E+00 0.000E+00
 KR 88      9.605E+04 7.524E+04 5.894E+04 3.617E+04 1.362E+04 5.129E+03 2.739E+02 7.806E-01 2.224E-03 6.380E-06 5.188E-11 2.741E-26
 RB 88      0.000E+00 5.556E+05 4.890E+05 3.046E+05 1.148E+05 4.322E+04 2.307E+03 6.579E+00 1.875E-02 5.371E-05 4.370E-10 2.120E-25
  I131      5.215E+04 5.196E+04 5.177E+04 5.140E+04 5.067E+04 4.995E+04 4.784E+04 4.389E+04 4.026E+04 3.694E+04 3.109E+04 1.853E+04
  I132      2.721E+05 2.013E+05 1.490E+05 8.152E+04 2.442E+04 7.315E+03 1.966E+02 1.421E-01 1.026E-04 7.414E-08 3.870E-14 0.000E+00
  I133      2.497E+05 2.415E+05 2.336E+05 2.185E+05 1.913E+05 1.674E+05 1.122E+05 5.044E+04 2.267E+04 1.019E+04 2.058E+03 1.695E+01
 XE133      1.644E+04 1.644E+04 1.643E+04 1.642E+04 1.636E+04 1.627E+04 1.582E+04 1.453E+04 1.305E+04 1.159E+04 9.008E+03 4.115E+03
  I134      1.342E+06 6.086E+05 2.760E+05 5.678E+04 2.403E+03 1.017E+02 7.702E-03 4.421E-11 2.537E-19 0.000E+00 0.000E+00 0.000E+00
 CS134      1.471E+04 1.471E+04 1.471E+04 1.471E+04 1.471E+04 1.470E+04 1.470E+04 1.468E+04 1.467E+04 1.466E+04 1.463E+04 1.455E+04
  I135      2.029E+05 1.827E+05 1.645E+05 1.334E+05 8.772E+04 5.767E+04 1.639E+04 1.323E+03 1.069E+02 8.632E+00 5.630E-02 1.562E-08
 XE135      4.032E+04 4.791E+04 5.374E+04 6.151E+04 6.609E+04 6.236E+04 3.807E+04 8.650E+03 1.593E+03 2.720E+02 7.318E+00 1.263E-04
 CS136      4.525E+03 4.515E+03 4.505E+03 4.485E+03 4.445E+03 4.406E+03 4.291E+03 4.070E+03 3.861E+03 3.662E+03 3.294E+03 2.398E+03
 CS137      9.284E+03 9.284E+03 9.284E+03 9.284E+03 9.284E+03 9.284E+03 9.283E+03 9.283E+03 9.282E+03 9.282E+03 9.280E+03 9.277E+03
 XE138      4.283E+05 2.276E+04 1.209E+03 3.415E+00 2.721E-05 2.169E-10 1.128E-25 0.000E+00 0.000E+00 0.000E+00 0.000E+00 0.000E+00
 CS138      0.000E+00 1.914E+05 6.276E+04 4.918E+03 2.810E+01 1.604E-01 2.979E-08 1.028E-21 0.000E+00 0.000E+00 0.000E+00 0.000E+00
1                                                                                OUTPUT UNIT = 11                          PAGE   52
 ORIGEN2 V2.1 (8-1-91), Run on 03/10/04    at 13:15:17
0                    PRINCIPAL PHOTON SOURCES IN GROUP  7,PHOTONS/SEC
                      MEAN ENERGY= 0.225MEV

 NUCLIDE
            0 HR      1 HR      2 HR      4 HR      8 HR      12 HR     24 HR     48 HR     72 HR     96 HR     144 HR    288 HR
 KR 85M     1.061E+06 9.086E+05 7.784E+05 5.713E+05 3.077E+05 1.657E+05 2.589E+04 6.319E+02 1.542E+01 3.765E-01 2.243E-04 4.743E-14
 KR 87      4.553E+05 2.640E+05 1.530E+05 5.145E+04 5.814E+03 6.571E+02 9.455E-01 1.970E-06 4.103E-12 8.546E-18 0.000E+00 0.000E+00
 KR 88      1.528E+06 1.197E+06 9.375E+05 5.753E+05 2.166E+05 8.158E+04 4.357E+03 1.242E+01 3.538E-02 1.015E-04 8.252E-10 4.360E-25
 RB 88      0.000E+00 8.700E+05 7.657E+05 4.770E+05 1.797E+05 6.767E+04 3.613E+03 1.030E+01 2.936E-02 8.411E-05 6.843E-10 3.319E-25
  I131      1.024E+06 1.021E+06 1.017E+06 1.010E+06 9.953E+05 9.811E+05 9.397E+05 8.621E+05 7.909E+05 7.256E+05 6.107E+05 3.641E+05
  I132      6.335E+05 4.687E+05 3.467E+05 1.898E+05 5.685E+04 1.703E+04 4.577E+02 3.307E-01 2.389E-04 1.726E-07 9.009E-14 0.000E+00
  I133      3.919E+05 3.791E+05 3.667E+05 3.430E+05 3.002E+05 2.628E+05 1.761E+05 7.916E+04 3.558E+04 1.599E+04 3.230E+03 2.661E+01
 XE133M     5.255E+04 5.249E+04 5.241E+04 5.219E+04 5.156E+04 5.070E+04 4.720E+04 3.840E+04 2.978E+04 2.251E+04 1.238E+04 1.890E+03
  I134      1.230E+06 5.579E+05 2.530E+05 5.205E+04 2.202E+03 9.319E+01 7.060E-03 4.052E-11 2.326E-19 0.000E+00 0.000E+00 0.000E+00
 CS134      1.349E+04 1.349E+04 1.349E+04 1.349E+04 1.348E+04 1.348E+04 1.348E+04 1.346E+04 1.345E+04 1.344E+04 1.341E+04 1.334E+04
  I135      1.216E+06 1.095E+06 9.861E+05 7.995E+05 5.257E+05 3.456E+05 9.821E+04 7.931E+03 6.405E+02 5.173E+01 3.374E-01 9.359E-08
 XE135      4.076E+06 4.844E+06 5.434E+06 6.218E+06 6.682E+06 6.305E+06 3.849E+06 8.745E+05 1.610E+05 2.750E+04 7.399E+02 1.277E-02
 CS136      3.398E+05 3.391E+05 3.383E+05 3.368E+05 3.339E+05 3.309E+05 3.223E+05 3.057E+05 2.899E+05 2.750E+05 2.474E+05 1.801E+05
 CS137      7.373E+03 7.373E+03 7.373E+03 7.373E+03 7.373E+03 7.373E+03 7.373E+03 7.372E+03 7.372E+03 7.371E+03 7.370E+03 7.368E+03
 XE138      6.399E+06 3.400E+05 1.806E+04 5.102E+01 4.066E-04 3.240E-09 1.686E-24 0.000E+00 0.000E+00 0.000E+00 0.000E+00 0.000E+00
 CS138      0.000E+00 2.753E+05 9.030E+04 7.075E+03 4.043E+01 2.307E-01 4.286E-08 1.478E-21 0.000E+00 0.000E+00 0.000E+00 0.000E+00
0                    PRINCIPAL PHOTON SOURCES IN GROUP  8,PHOTONS/SEC
                      MEAN ENERGY= 0.375MEV

 NUCLIDE
            0 HR      1 HR      2 HR      4 HR      8 HR      12 HR     24 HR     48 HR     72 HR     96 HR     144 HR    288 HR
```

```
 KR 85M     2.378E+05 2.037E+05 1.745E+05 1.281E+05 6.897E+04 3.715E+04 5.804E+03 1.417E+02 3.458E+00 8.439E-02 5.028E-05 1.063E-14
 KR 87      2.356E+06 1.366E+06 7.921E+05 2.663E+05 3.009E+04 3.401E+03 4.893E+00 1.019E-05 2.123E-11 4.423E-17 0.000E+00 0.000E+00
 KR 88      2.376E+05 1.861E+05 1.458E+05 8.947E+04 3.369E+04 1.269E+04 6.775E+02 1.931E+00 5.501E-03 1.578E-05 1.283E-10 6.780E-26
 RB 88      0.000E+00 4.867E+05 4.283E+05 2.668E+05 1.005E+05 3.786E+04 2.021E+03 5.763E+00 1.643E-02 4.705E-05 3.828E-10 1.857E-25
  I131      9.835E+06 9.799E+06 9.764E+06 9.694E+06 9.556E+06 9.420E+06 9.022E+06 8.277E+06 7.593E+06 6.966E+06 5.863E+06 3.495E+06
  I132      4.484E+05 3.317E+05 2.454E+05 1.343E+05 4.023E+04 1.205E+04 3.239E+02 2.340E-01 1.691E-04 1.222E-07 6.376E-14 0.000E+00
  I133      2.339E+05 2.262E+05 2.188E+05 2.047E+05 1.792E+05 1.568E+05 1.051E+05 4.724E+04 2.123E+04 9.542E+03 1.927E+03 1.588E+01
  I134      2.761E+06 1.252E+06 5.679E+05 1.168E+05 4.943E+03 2.092E+02 1.585E-02 9.094E-11 5.220E-19 0.000E+00 0.000E+00 0.000E+00
  I135      9.376E+05 8.443E+05 7.603E+05 6.165E+05 4.053E+05 2.665E+05 7.572E+04 6.115E+03 4.938E+02 3.988E+01 2.601E-01 7.216E-08
 CS136      4.105E+05 4.095E+05 4.086E+05 4.069E+05 4.033E+05 3.997E+05 3.893E+05 3.692E+05 3.502E+05 3.322E+05 2.988E+05 2.175E+05
 XE138      4.584E+06 2.435E+05 1.294E+04 3.655E+01 2.912E-04 2.321E-09 1.208E-24 0.000E+00 0.000E+00 0.000E+00 0.000E+00 0.000E+00
 CS138      0.000E+00 2.526E+05 8.283E+04 6.491E+03 3.709E+01 2.117E-01 3.931E-08 1.356E-21 0.000E+00 0.000E+00 0.000E+00 0.000E+00
0                    PRINCIPAL PHOTON SOURCES IN GROUP  9,PHOTONS/SEC
                      MEAN ENERGY= 0.575MEV

 NUCLIDE
            0 HR      1 HR      2 HR      4 HR      8 HR      12 HR     24 HR     48 HR     72 HR     96 HR     144 HR    288 HR
  I131      1.066E+06 1.063E+06 1.059E+06 1.051E+06 1.036E+06 1.021E+06 9.784E+05 8.975E+05 8.234E+05 7.554E+05 6.358E+05 3.790E+05
  I132      1.874E+07 1.386E+07 1.026E+07 5.613E+06 1.681E+06 5.037E+05 1.354E+04 9.781E+00 7.066E-03 5.105E-06 2.665E-12 0.000E+00
  I133      1.310E+07 1.267E+07 1.226E+07 1.147E+07 1.004E+07 8.783E+06 5.888E+06 2.646E+06 1.189E+06 5.345E+05 1.080E+05 8.896E+02
  I134      8.649E+06 3.923E+06 1.779E+06 3.660E+05 1.549E+04 6.553E+02 4.964E-02 2.849E-10 1.635E-18 0.000E+00 0.000E+00 0.000E+00
 CS134      4.852E+06 4.852E+06 4.852E+06 4.852E+06 4.851E+06 4.850E+06 4.848E+06 4.844E+06 4.839E+06 4.835E+06 4.826E+06 4.799E+06
  I135      1.226E+06 1.104E+06 9.945E+05 8.064E+05 5.301E+05 3.485E+05 9.905E+04 7.999E+03 6.460E+02 5.217E+01 3.403E-01 9.439E-08
 XE135      1.279E+05 1.520E+05 1.705E+05 1.952E+05 2.097E+05 1.979E+05 1.208E+05 2.745E+04 5.054E+03 8.632E+02 2.322E+01 4.008E-04
1                                                                                OUTPUT UNIT = 11                          PAGE   53
 ORIGEN2 V2.1 (8-1-91), Run on 03/10/04    at 13:15:17
 XE135M     2.310E+06 1.625E+06 1.434E+06 1.161E+06 7.630E+05 5.017E+05 1.426E+05 1.151E+04 9.297E+02 7.508E+01 4.897E-01 1.358E-07
 BA137M     0.000E+00 2.387E+06 2.387E+06 2.387E+06 2.387E+06 2.387E+06 2.387E+06 2.387E+06 2.386E+06 2.386E+06 2.386E+06 2.385E+06
 CS138      0.000E+00 8.737E+05 2.866E+05 2.245E+04 1.283E+02 7.323E-01 1.360E-07 4.692E-21 0.000E+00 0.000E+00 0.000E+00 0.000E+00
0                    PRINCIPAL PHOTON SOURCES IN GROUP 10,PHOTONS/SEC
                      MEAN ENERGY= 0.850MEV

 NUCLIDE
            0 HR      1 HR      2 HR      4 HR      8 HR      12 HR     24 HR     48 HR     72 HR     96 HR     144 HR    288 HR
 KR 88      9.549E+05 7.480E+05 5.860E+05 3.596E+05 1.354E+05 5.099E+04 2.723E+03 7.760E+00 2.211E-02 6.343E-05 5.157E-10 2.725E-25
 RB 88      0.000E+00 8.011E+05 7.050E+05 4.392E+05 1.655E+05 6.231E+04 3.327E+03 9.487E+00 2.704E-02 7.744E-05 6.301E-10 3.057E-25
  I131      1.895E+05 1.888E+05 1.882E+05 1.868E+05 1.841E+05 1.815E+05 1.739E+05 1.595E+05 1.463E+05 1.342E+05 1.130E+05 6.735E+04
  I132      1.216E+07 8.994E+06 6.654E+06 3.642E+06 1.091E+06 3.268E+05 8.783E+03 6.346E+00 4.585E-03 3.312E-06 1.729E-12 0.000E+00
  I133      1.263E+06 1.221E+06 1.181E+06 1.105E+06 9.672E+05 8.465E+05 5.675E+05 2.550E+05 1.146E+05 5.152E+04 1.041E+04 8.574E+01
  I134      3.285E+07 1.490E+07 6.757E+06 1.390E+06 5.881E+04 2.489E+03 1.885E-01 1.082E-09 6.211E-18 0.000E+00 0.000E+00 0.000E+00
 CS134      3.370E+06 3.370E+06 3.370E+06 3.369E+06 3.369E+06 3.368E+06 3.367E+06 3.364E+06 3.361E+06 3.358E+06 3.351E+06 3.333E+06
  I135      1.526E+06 1.374E+06 1.237E+06 1.003E+06 6.595E+05 4.336E+05 1.232E+05 9.950E+03 8.036E+02 6.489E+01 4.233E-01 1.174E-07
 CS136      9.164E+05 9.143E+05 9.123E+05 9.083E+05 9.003E+05 8.924E+05 8.691E+05 8.244E+05 7.819E+05 7.416E+05 6.671E+05 4.857E+05
0                    PRINCIPAL PHOTON SOURCES IN GROUP 11,PHOTONS/SEC
                      MEAN ENERGY= 1.250MEV

 NUCLIDE
            0 HR      1 HR      2 HR      4 HR      8 HR      12 HR     24 HR     48 HR     72 HR     96 HR     144 HR    288 HR
 KR 88      4.370E+05 3.423E+05 2.682E+05 1.646E+05 6.197E+04 2.334E+04 1.246E+03 3.551E+00 1.012E-02 2.903E-05 2.360E-10 1.247E-25
  I132      2.610E+06 1.931E+06 1.428E+06 7.818E+05 2.342E+05 7.015E+04 1.886E+03 1.362E+00 9.842E-04 7.111E-07 3.711E-13 0.000E+00
  I133      7.380E+05 7.138E+05 6.905E+05 6.459E+05 5.653E+05 4.948E+05 3.317E+05 1.491E+05 6.700E+04 3.011E+04 6.082E+03 5.011E+01
  I134      5.574E+06 2.528E+06 1.147E+06 2.359E+05 9.980E+03 4.223E+02 3.199E-02 1.836E-10 1.054E-18 0.000E+00 0.000E+00 0.000E+00
 CS134      2.228E+05 2.227E+05 2.227E+05 2.227E+05 2.227E+05 2.227E+05 2.225E+05 2.223E+05 2.221E+05 2.219E+05 2.215E+05 2.203E+05
  I135      1.095E+07 9.857E+06 8.876E+06 7.197E+06 4.732E+06 3.111E+06 8.840E+05 7.139E+04 5.765E+03 4.656E+02 3.037E+00 8.424E-07
 CS136      8.247E+05 8.229E+05 8.211E+05 8.175E+05 8.103E+05 8.032E+05 7.822E+05 7.419E+05 7.037E+05 6.674E+05 6.004E+05 4.371E+05
 XE138      4.688E+05 2.491E+04 1.323E+03 3.738E+00 2.979E-05 2.374E-10 1.235E-25 0.000E+00 0.000E+00 0.000E+00 0.000E+00 0.000E+00
 CS138      0.000E+00 2.662E+06 8.731E+05 6.842E+04 3.909E+02 2.231E+00 4.144E-07 1.430E-20 0.000E+00 0.000E+00 0.000E+00 0.000E+00
0                    PRINCIPAL PHOTON SOURCES IN GROUP 12,PHOTONS/SEC
```

MEAN ENERGY= 1.750MEV

NUCLIDE

	0 HR	1 HR	2 HR	4 HR	8 HR	12 HR	24 HR	48 HR	72 HR	96 HR	144 HR	288 HR
KR 87	1.182E+05	6.854E+04	3.974E+04	1.336E+04	1.510E+03	1.706E+02	2.455E-01	5.114E-07	1.065E-12	2.219E-18	0.000E+00	0.000E+00
KR 88	7.302E+05	5.720E+05	4.481E+05	2.750E+05	1.035E+05	3.899E+04	2.082E+03	5.934E+00	1.691E-02	4.850E-05	3.944E-10	2.084E-25
RB 88	0.000E+00	1.034E+06	9.097E+05	5.667E+05	2.135E+05	8.040E+04	4.293E+03	1.224E+01	3.489E-02	9.993E-05	8.131E-10	3.944E-25
I132	2.420E+05	1.791E+05	1.325E+05	7.250E+04	2.172E+04	6.506E+03	1.749E+02	1.263E-01	9.127E-05	6.594E-08	3.442E-14	0.000E+00
I133	4.220E+02	4.081E+02	3.948E+02	3.693E+02	3.232E+02	2.829E+02	1.896E+02	8.523E+01	3.830E+01	1.721E+01	3.477E+00	2.865E-02
I134	2.516E+06	1.141E+06	5.176E+05	1.065E+05	4.505E+03	1.906E+02	1.444E-02	8.289E-11	4.757E-19	0.000E+00	0.000E+00	0.000E+00
I135	3.570E+06	3.215E+06	2.895E+06	2.347E+06	1.543E+06	1.014E+06	2.883E+05	2.328E+04	1.880E+03	1.518E+02	9.904E-01	2.747E-07
CS136	9.641E+02	9.620E+02	9.598E+02	9.556E+02	9.472E+02	9.389E+02	9.144E+02	8.673E+02	8.226E+02	7.802E+02	7.019E+02	5.110E+02
XE138	2.612E+06	1.388E+05	7.373E+03	2.082E+01	1.659E-04	1.322E-09	6.881E-25	0.000E+00	0.000E+00	0.000E+00	0.000E+00	0.000E+00

1 OUTPUT UNIT = 11 PAGE 54

ORIGEN2 V2.1 (8-1-91), Run on 03/10/04 at 13:15:17

0 PRINCIPAL PHOTON SOURCES IN GROUP 13,PHOTONS/SEC

MEAN ENERGY= 2.250MEV

NUCLIDE

	0 HR	1 HR	2 HR	4 HR	8 HR	12 HR	24 HR	48 HR	72 HR	96 HR	144 HR	288 HR
KR 87	1.182E+05	6.854E+04	3.974E+04	1.336E+04	1.510E+03	1.706E+02	2.455E-01	5.114E-07	1.065E-12	2.219E-18	0.000E+00	0.000E+00
KR 88	3.466E+06	2.715E+06	2.127E+06	1.305E+06	4.914E+05	1.851E+05	9.882E+03	2.816E+01	8.024E-02	2.302E-04	1.872E-09	9.889E-25
I132	1.930E+05	1.428E+05	1.056E+05	5.780E+04	1.731E+04	5.186E+03	1.394E+02	1.007E-01	7.276E-05	5.257E-08	2.744E-14	0.000E+00
I134	1.870E+05	8.480E+04	3.846E+04	7.911E+03	3.347E+02	1.416E+01	1.073E-03	6.159E-12	3.535E-20	0.000E+00	0.000E+00	0.000E+00
I135	3.866E+05	3.481E+05	3.135E+05	2.542E+05	1.671E+05	1.099E+05	3.122E+04	2.521E+03	2.036E+02	1.644E+01	1.073E-01	2.975E-08
XE138	2.703E+06	1.436E+05	7.631E+03	2.155E+01	1.717E-04	1.369E-09	7.122E-25	0.000E+00	0.000E+00	0.000E+00	0.000E+00	0.000E+00
CS138	0.000E+00	3.572E+05	1.172E+05	9.181E+03	5.246E+01	2.994E-01	5.561E-08	1.918E-21	0.000E+00	0.000E+00	0.000E+00	0.000E+00

0 PRINCIPAL PHOTON SOURCES IN GROUP 14,PHOTONS/SEC

MEAN ENERGY= 2.750MEV

NUCLIDE

	0 HR	1 HR	2 HR	4 HR	8 HR	12 HR	24 HR	48 HR	72 HR	96 HR	144 HR	288 HR
KR 87	5.072E+05	2.941E+05	1.705E+05	5.732E+04	6.477E+03	7.320E+02	1.053E+00	2.194E-06	4.571E-12	9.521E-18	0.000E+00	0.000E+00
KR 88	4.297E+04	3.366E+04	2.637E+04	1.618E+04	6.093E+03	2.295E+03	1.225E+02	3.492E-01	9.949E-04	2.854E-06	2.321E-11	1.226E-26
RB 88	0.000E+00	1.012E+05	8.907E+04	5.549E+04	2.091E+04	7.873E+03	4.203E+02	1.199E+00	3.416E-03	9.785E-06	7.961E-11	3.862E-26
I132	4.685E+03	3.466E+03	2.564E+03	1.403E+03	4.203E+02	1.259E+02	3.384E+00	2.445E-03	1.767E-06	1.276E-09	6.662E-16	0.000E+00
I134	3.442E+04	1.561E+04	7.081E+03	1.457E+03	6.163E+01	2.608E+00	1.976E-04	1.134E-12	6.508E-21	0.000E+00	0.000E+00	0.000E+00
CS138	0.000E+00	1.784E+05	5.851E+04	4.584E+03	2.620E+01	1.495E-01	2.777E-08	9.579E-22	0.000E+00	0.000E+00	0.000E+00	0.000E+00

0 PRINCIPAL PHOTON SOURCES IN GROUP 15,PHOTONS/SEC

MEAN ENERGY= 3.500MEV

NUCLIDE

	0 HR	1 HR	2 HR	4 HR	8 HR	12 HR	24 HR	48 HR	72 HR	96 HR	144 HR	288 HR
KR 87	2.001E+04	1.160E+04	6.726E+03	2.261E+03	2.555E+02	2.888E+01	4.155E-02	8.656E-08	1.803E-13	3.756E-19	0.000E+00	0.000E+00
RB 88	0.000E+00	2.925E+04	2.574E+04	1.603E+04	6.041E+03	2.275E+03	1.214E+02	3.463E-01	9.870E-04	2.827E-06	2.300E-11	1.116E-26
CS138	0.000E+00	1.183E+04	3.881E+03	3.041E+02	1.738E+00	9.916E-03	1.842E-09	6.354E-23	0.000E+00	0.000E+00	0.000E+00	0.000E+00

0 PRINCIPAL PHOTON SOURCES IN GROUP 16,PHOTONS/SEC

MEAN ENERGY= 5.000MEV

NUCLIDE

	0 HR	1 HR	2 HR	4 HR	8 HR	12 HR	24 HR	48 HR	72 HR	96 HR	144 HR	288 HR
RB 88	0.000E+00	6.719E+03	5.913E+03	3.684E+03	1.388E+03	5.226E+02	2.790E+01	7.957E-02	2.268E-04	6.495E-07	5.285E-12	2.564E-27
CS138	0.000E+00	3.254E+02	1.067E+02	8.362E+00	4.778E-02	2.727E-04	5.065E-11	1.747E-24	0.000E+00	0.000E+00	0.000E+00	0.000E+00

0

Attachment C - QADCG Input File

Card A - Problem title.

Card B - The source region is specified by the source points generated by MONTE. In the monte carlo version of QAD, the variables LSO, MSO and NSO are not used. They are filled with dummy variables.

Variable	Input	Comment/Description
LSO	1	Number of radial increments
MSO	1	Number of axial increments
NSO	1	Number of azimuthal increments
MAT	14	Number of elements
NCOMP	4	Number of material compositions
NREG	20	Geometry input switch
NRGY	15	Number of gamma ray energy groups
NBOUND	1	Variable not used
NSOPT	1	Cartesian geometry used
NZSO	3	Most probable source region
ISRC	1	Cosine distributed source
INEUT	0	Number of neutron moments data sets
NGPF	10	First source point for ray printout
NGPL	100	Last source point for ray printout
NGPI	10	Incremental step size for ray printout
NGINT	0	Number of additional gamma calculations
NVOL	1	Monte Carlo source points used

The number of elements and materials compositions was based on the material compositions given in the data section. The number of gamma groups was calculated previously by the ORIGEN2 code. The ORIGEN2 output lists 18 gamma groups.

Card B1 - Variable NSEED is the random number generator seed source and is a variable only used by the Monte Carlo point generating code, QAD does not use this variable.

Variable	Input	Comment/Description
NSEED	1	Random number generator seed taken from system clock
NPLOT	0	Plots of Monte Carlo dose calculations not desired
NCONC	0	Find desired number of points

The number of source points used in the calculation was 20,000.

```
The smallest rectangular parallel piped that surrounds
the specified regions has dimensions of
     XMIN          XMAX          YMIN          YMAX          ZMIN          ZMAX
 -0.3110E+00  0.1551E+02 -0.3110E+00  0.1171E+02 -0.3110E+00  0.1660E+02

 The number of points tested was:    2463618
 The number of points found was:       20000
 The efficiency was:              0.8118E-02

 The piped volume was (cc):       0.3217E+04
 The region volume was (cc):      0.2611E+02 +/- 0.1846E+00
 The concentration was (# pts/cc) 0.7659E+03

 The region mass was (g):         0.2611E+02 +/- 0.1846E+00
 The composition number was  1 with density of 0.1000E+01 g/cc

 The regions used were as follows with region option 2

 1 2 3 4 5 6 7 8 9 10 11 12 13 14 15 16 17
```

Card C - Variable ASO is the source strength in photons/second. The source strength was calculated using the total source volume from the MONTE put (26.1 cc) and the total photon concentration values listed in Table 3. The remaining Card C variable, XISO, represents the constants for the sine source distribution. Since all values of XISO are input as zero, a flat or uniformly distributed source is obtained.

Card C1 - These variable are not used by the QAD program but they are in the input so that the Monte Carlo point generating code can use the input and the user is reminded of where the source points are.

Variable	Input	Comment/Description
ISOURCE	2	Specifies that combinatorial geometry zones contain the source points
NREGION	17	Specifies the number of zones
NTOT	20000	Specifies the desired number of points

Card C2 – This variable is not used by the QAD program but is in the input so that the Monte Carlo point generating code can use the input and the user is reminded of where the source points are.

Variable	Input	Comment/Description
INUM	1 2 3 4 5 6 7 8 9 10 11 12 13 14 15 16 17	Specifies the combinatorial geometry zones that must contain the source points

Card C3 - This variable is not used by the QAD program but is in the input so that the Monte Carlo point generating code can use the input and the user is reminded of where the source points are.

Variable	Input	Comment/Description
IZONE	Matches number of values in INUM	Specifies all ones in a one-to-one correspondence with INUM

Cards CGA, CGB, CGC, CGD, CGE and M - These CG cards specify the combinatorial geometry for the QAD input. The CGA card is an alphanumeric title card for the geometry input. To describe the various bodies for the input, one set of CGB cards is required for each body. Refer to Attachment E for dimensional and coordinate information. Dimensional information taken from reference 1.

Variable	Input	Comment/Description
ITYPE	RCC SPH	Body type: right circular cylinder Body type: sphere
IALP	*	Body number
FPD	*	Data required to describe the body

* See table below for actual values.

IALP	Description	ITYPE	Radius, cm	Vertex Coordinates, cm			Height Coordinates, cm		
Heading used for ITYPE RCC, SPH, BOX, and WED				X	Y	Z	X	Y	Z
Heading used for ITYPE RPP				Xmin	Xmax	Ymin	Ymax	Zmin	Zmax
1	Inlet pipe - inside	RCC	0.311	15.2	0	0	0	0	16.6
2	Inlet pipe - outside	RCC	0.476	15.2	0	0	0	0	16.6
3	Elbow - inside	SPH	0.311	15.2	0	0			
4	Elbow - outside	SPH	0.476	15.2	0	0			
5	Sample tube – 1st horizontal section - inside	RCC	0.311	15.2	0	0	0	11.4	0
6	Sample tube – 1st horizontal section - outside	RCC	0.476	15.2	0	0	0	11.4	0
7	Elbow - inside	SPH	0.311	15.2	11.4	0			
8	Elbow - outside	SPH	0.476	15.2	11.4	0			
9	Sample tube – 1st vertical section - inside	RCC	0.311	10.2	11.4	0	5.08	0	0
10	Sample tube – 1st vertical section - outside	RCC	0.476	10.2	11.4	0	5.08	0	0
11	Elbow - inside	SPH	0.311	10.2	11.4	0			
12	Elbow - outside	SPH	0.476	10.2	11.4	0			
13	Sample tube – 2nd horizontal section - inside	RCC	0.311	10.2	0	0	0	11.4	0
14	Sample tube – 2nd horizontal section - outside	RCC	0.476	10.2	0	0	0	11.4	0
15	Elbow - inside	SPH	0.311	10.2	0	0			
16	Elbow - outside	SPH	0.476	10.2	0	0			
17	Sample tube – 2nd vertical section - inside	RCC	0.311	5.08	0	0	5.08	0	0
18	Sample tube – 2nd vertical section - outside	RCC	0.476	5.08	0	0	5.08	0	0
19	Elbow - inside	SPH	0.311	5.08	0	0			
20	Elbow - outside	SPH	0.476	5.08	0	0			
21	Sample tube – 3rd horizontal section - inside	RCC	0.311	5.08	0	0	0	11.4	0
22	Sample tube – 3rd horizontal section - outside	RCC	0.476	5.08	0	0	0	11.4	0
23	Elbow - inside	SPH	0.311	5.08	11.4	0			
24	Elbow - outside	SPH	0.476	5.08	11.4	0			
25	Sample tube – 3rd vertical section - inside	RCC	0.311	0	11.4	0	5.08	0	0
26	Sample tube – 3rd vertical section - outside	RCC	0.476	0	11.4	0	5.08	0	0
27	Elbow - inside	SPH	0.311	0	11.4	0			
28	Elbow - outside	SPH	0.476	0	11.4	0			
29	Sample tube – 4th horizontal section - inside	RCC	0.311	0	0	0	0	11.4	0
30	Sample tube – 4th horizontal section - outside	RCC	0.476	0	0	0	0	11.4	0

IALP	Description	ITYPE	Radius, cm	Vertex Coordinates, cm			Height Coordinates, cm		
Heading used for ITYPE RCC, SPH, BOX, and WED				X	Y	Z	X	Y	Z
Heading used for ITYPE RPP				Xmin	Xmax	Ymin	Ymax	Zmin	Zmax
31	Elbow - inside	SPH	0.311	0	0	0			
32	Elbow - outside	SPH	0.476	0	0	0			
33	Outlet pipe - inside	RCC	0.311	0	0	0	0	0	14.1
34	Outlet pipe - outside	RCC	0.476	0	0	0	0	0	14.1
35	Outside air space	RCC	50.0	-50.0	0	0	100.0	0	0
36	Model outside boundary	RCC	500.0	-1000.0	0	0	2000.0	0	0

For Card CGC, variables IALP, NAZ, IBIAS, and JTY specify the input zones. When determining the number of zones entered upon leaving any of the bodies, zone bodies can be crossed more than once. For this calculation, it was set arbitrarily to 5.

Zone	Description	IBIAS & ITYPE
H01	Water in inlet tube	+1
H02	Water in elbow	+3 -1
H03	Water in 1st horizontal sample tube section	+5 -3 -1
H04	Water in elbow	+7 -5
H05	Water in 1st vertical sample tube section	+9 -7 -5
H06	Water in elbow	+11 -9
H07	Water in 2nd horizontal sample tube section	+13 -11 -9
H08	Water in elbow	+15 -13
H09	Water in 2nd vertical sample tube section	+17 -15 -13
H10	Water in elbow	+19 -17
H11	Water in 3rd horizontal sample tube section	+21 -19 -17
H12	Water in elbow	+23 -21
H13	Water in 3rd vertical sample tube section	+25 -23 -21
H14	Water in elbow	+27 -25
H15	Water in 4th horizontal sample tube section	+29 -27 -25
H16	Water in elbow	+31 -29
H17	Water in outlet tube	+33 -31
S01	Inlet tube wall	+2 -1 -5
S02	Elbow wall	+4 -3 -2 -6
S03	1st horizontal sample tube section wall	+6 -5 -2 -9
S04	Elbow wall	+8 -7 -6 -10
S05	1st vertical sample tube section wall	+10 -9 -6 -13
S06	Elbow wall	+12 -11 -10 -14
S07	2nd horizontal sample tube section wall	+14 -13 -10 -17
S08	Elbow wall	+16 -15 -14 -18
S09	2nd vertical sample tube section wall	+18 -17 -14 -21
S10	Elbow wall	+20 -19 -18 -22
S11	3rd horizontal sample tube section wall	+22 -21 -18 -25
S12	Elbow wall	+24 -23 -22 -26

Zone	Description	IBIAS & ITYPE
S13	3rd vertical sample tube section wall	+26 -25 -22 -29
S14	Elbow wall	+28 -27 -26 -30
S15	4th horizontal sample tube section wall	+30 -29 -26 -33
S16	Elbow wall	+32 -31 -30 -34
S17	Outlet tube wall	+34 -33 -30
Air	Air space around sample tube	+35 -2 -4 -6 -8 -10 -12 -14 -16 -18 -20 -22 -24 -26 -28 -30 -32 -34
UNI	Model outside boundary	+36 -35

For Card CGD, variable MRIZ is set to 1 per Input 17.

For Card CGE, variable MMIZ is the medium number in which the ith input zone is contained. Medium numbers are 1, 2, 3 or 4 corresponding to water, steel, concrete and air. The medium corresponds to the material composition specified in card N. Concrete values are not used in this calculation.

For Card M, variable NBLD specifies the buildup factor to use. For this calculation, NBLD = 11 was used which requires an additional input card M2. Variable MATZ gives the atomic numbers of the elements used.

For Card M2, variable MATGP specifies the index of the medium and variable ICGP specifies the index of the response. The medium used was water and the response was exposure.

Cards N, O and P

For Card N, variable COMP1 specifies the partial densities of each element in their respective material composition. Using the data listed in the data section, the partial densities for each composition used is listed below.

Material composition for concrete: 0.020 g/cc H, 1.16 g/cc O, 0.342 g/cc Si, 0.582 g/cc Ca, 0.118 g/cc C, 0.057 g/cc Mg, 0.085 g/cc Al, 0.007 g/cc S, 0.004 g/cc K, 0.026 g/cc Fe
Material composition for SS304: 0.006 g/cc C, 0.16 g/cc Mn, 1.524 g/cc Cr, 0.802 g/cc Ni, 0.080 g/cc Si, 5.447 g/cc Fe
Material composition for air: 0.001 g/cc N, 2.71E-04 g/cc O
Material composition for water: 0.889 g/cc O, 0.111 g/cc H

The input listing is shown below. Only the atomic number and the material densities are used in the input file.

Atomic Number		1	6	7	8	12	13	14	16	19	20	24	25	26	28
Material	Total	H	C	N	O	Mg	Al	Si	S	K	Ca	Cr	Mn	Fe	Ni
Concrete	2.401E+00	2.000E-02	1.180E-01	0.000E+00	1.160E+00	5.700E-02	8.500E-02	3.420E-01	7.000E-03	4.000E-03	5.820E-01	0.000E+00	0.000E+00	2.600E-02	0.000E+00
SS304	8.019E+00	0.000E+00	6.000E-03	0.000E+00	0.000E+00	0.000E+00	0.000E+00	8.000E-02	0.000E+00	0.000E+00	0.000E+00	1.524E+00	1.600E-01	5.447E+00	8.020E-01
Air	1.271E-03	0.000E+00	0.000E+00	1.000E-03	2.710E-04	0.000E+00	0.000E+00	0.000E+00	0.000E+00	0.000E+00	0.000E+00	0.000E+00	0.000E+00	0.000E+00	0.000E+00
Water	1.000E+00	1.110E-01	0.000E+00	0.000E+00	8.890E-01	0.000E+00	0.000E+00	0.000E+00	0.000E+00	0.000E+00	0.000E+00	0.000E+00	0.000E+00	0.000E+00	0.000E+00

For Card O, variable EBAR specifies the mean gamma energy for each photon group in MEV/photon. The gamma energies are listed in the data ;ion.

For Card P, GAMEN specifies the mean gamma energy for each photon group in MEV/photon.

Cards Q, R, S, T and U

For Card Q, variable CONV specifies the gamma ray flux to dose conversion factor for each mean gamma energy weighted by the gamma energy group fraction. Values listed in the table below were used to calculate the weighted dose conversion factors. For example, the weighted dose conversion factor for the 0.125 MeV energy group at 2 hours post-accident is 2.608E-06 x 1.09E-02 = 2.855E-08.

Sample Line Photon Spectrum Group Fractions Versus Time Post-Accident

Photon Energy (MeV)	0 HR	1 HR	2 HR	4 HR	8 HR	12 HR	24 HR
1.00E-02	1.25E-01	1.37E-01	1.35E-01	1.29E-01	1.17E-01	1.10E-01	9.85E-02
2.50E-02	3.10E-02	3.47E-02	3.51E-02	3.47E-02	3.34E-02	3.26E-02	3.16E-02
3.75E-02	4.41E-02	5.35E-02	6.19E-02	7.47E-02	9.08E-02	1.01E-01	1.21E-01
5.75E-02	2.29E-02	2.62E-02	2.56E-02	2.36E-02	2.07E-02	1.90E-02	1.66E-02
8.50E-02	3.66E-02	4.57E-02	5.28E-02	6.32E-02	7.62E-02	8.51E-02	1.03E-01
1.25E-01	1.20E-02	1.24E-02	1.09E-02	8.80E-03	6.74E-03	5.73E-03	4.43E-03
2.25E-01	7.27E-02	6.49E-02	7.43E-02	9.07E-02	1.08E-01	1.12E-01	9.22E-02
3.75E-01	8.70E-02	8.03E-02	8.77E-02	1.01E-01	1.21E-01	1.34E-01	1.61E-01
5.75E-01	2.00E-01	2.21E-01	2.31E-01	2.38E-01	2.40E-01	2.41E-01	2.43E-01
8.50E-01	2.13E-01	1.69E-01	1.40E-01	1.05E-01	8.37E-02	7.97E-02	8.57E-02
1.25E+00	8.65E-02	9.91E-02	9.32E-02	8.65E-02	7.40E-02	6.12E-02	3.73E-02
1.75E+00	3.86E-02	3.27E-02	3.19E-02	2.86E-02	2.10E-02	1.47E-02	4.96E-03
2.25E+00	2.78E-02	1.99E-02	1.78E-02	1.40E-02	7.57E-03	3.90E-03	6.92E-04
2.75E+00	2.32E-03	3.21E-03	2.27E-03	1.15E-03	3.77E-04	1.42E-04	9.17E-06
3.50E+00	7.89E-05	2.70E-04	2.33E-04	1.57E-04	6.99E-05	2.97E-05	2.03E-06
5.00E+00	0.00E+00	3.61E-05	3.87E-05	3.12E-05	1.54E-05	6.75E-06	4.67E-07
7.00E+00	0.00E+00	0.00E+00	0.00E+00	0.00E+00	0.00E+00	0.00E+00	0.00E+00
9.50E+00	0.00E+00	0.00E+00	0.00E+00	0.00E+00	0.00E+00	0.00E+00	0.00E+00
Total	1.00E+00	1.00E+00	1.00E+00	1.00E+00	1.00E+00	1.00E+00	1.00E+00

Weighted Dose Conversion Factors Versus Time Post-Accident (R/hr per MeV/cm^2-s)

Photon Energy (MeV)	Unweighted DCF	0 HR	1 HR	2 HR	4 HR	8 HR	12 HR	24 HR
1.00E-02	3.961E-04	4.939E-05	5.428E-05	5.366E-05	5.098E-05	4.645E-05	4.353E-05	3.902E-05
2.50E-02	3.201E-05	9.937E-07	1.110E-06	1.124E-06	1.112E-06	1.070E-06	1.043E-06	1.012E-06
3.75E-02	1.051E-05	4.632E-07	5.622E-07	6.507E-07	7.854E-07	9.540E-07	1.064E-06	1.270E-06
5.75E-02	4.673E-06	1.070E-07	1.226E-07	1.195E-07	1.104E-07	9.685E-08	8.886E-08	7.769E-08
8.50E-02	3.113E-06	1.139E-07	1.424E-07	1.643E-07	1.966E-07	2.373E-07	2.650E-07	3.207E-07
1.25E-01	2.608E-06	3.141E-08	3.237E-08	2.855E-08	2.296E-08	1.758E-08	1.494E-08	1.155E-08
2.25E-01	2.515E-06	1.828E-07	1.632E-07	1.869E-07	2.280E-07	2.706E-07	2.808E-07	2.318E-07
3.75E-01	2.489E-06	2.166E-07	1.998E-07	2.182E-07	2.524E-07	3.005E-07	3.345E-07	4.018E-07
5.75E-01	2.287E-06	4.581E-07	5.055E-07	5.279E-07	5.450E-07	5.484E-07	5.503E-07	5.550E-07
8.50E-01	2.069E-06	4.415E-07	3.496E-07	2.896E-07	2.180E-07	1.732E-07	1.649E-07	1.774E-07
1.25E+00	1.856E-06	1.606E-07	1.840E-07	1.730E-07	1.606E-07	1.374E-07	1.136E-07	6.922E-08
1.75E+00	1.674E-06	6.460E-08	5.476E-08	5.334E-08	4.789E-08	3.509E-08	2.468E-08	8.296E-09
2.25E+00	1.543E-06	4.290E-08	3.073E-08	2.746E-08	2.166E-08	1.169E-08	6.018E-09	1.068E-09
2.75E+00	1.440E-06	3.345E-09	4.626E-09	3.276E-09	1.661E-09	5.431E-10	2.050E-10	1.320E-11
3.50E+00	1.322E-06	1.043E-10	3.572E-10	3.086E-10	2.079E-10	9.238E-11	3.932E-11	2.690E-12

For Card R, variable FEABSG specifies the gamma flux-to-heat conversion factor in iron. Not used – set to one.

For Card S, variable WIDTHT specifies the total width of the gamma energy range.

Card T, variable WIDTHG specifies the width of each gamma energy group. Value stated specifies the low end of the energy range, high end of the range specified by the low end of the next highest energy range.

For Card U, variable specifies the units for the gamma flux, gamma dose and gamma heating variables.

rds V, W, X and Y

For Card V, variable NGINT not used because NGINT was set to 0.

For Card X, variables RRC, ZRC and PHIRC specify the coordinates of the detector. The detector location was placed at the location of the failed fuel monitor. The origin of the coordinate system was placed at the center of the elbow connecting the outlet sample tube to the bottom horizontal section of the sample tubing facing the detector. Variable NPCOPT specifies the coordinate system used to specify the location of a detector. Variables NGPF, NGPL and NGPI have the same meaning as on Card B. If they are greater than zero, they will override the values on Card B.

A copy of each input file used is repeated at the top of each output file.

Attachment D – QAD Ouput Files

D Ouput File At Time 0 Hour Post-Accident

```
QAD with Combinatorial Geometry and option for Monte
Carlo source points: Developed at Shonka Research Associates, Inc. 1994
Version: 1.05
Serial #: 121698

This problem started at 15:52:39 on 10/12/04

          INPUT DATA LIST

  1  # Input File - RE109 Response Calculation
  2  # LSO = 1
  3  # MSO = 1
  4  # NSO = 1
  5  # MAT = 14
  6  # NCOMP = 4
  7  # NREG = 20
  8  # NRGY = 15
  9  # NBOUND= 1
 10  # NSOPT = 1
 11  # NZSO = 3
 12  # ISRC = 1
 13  # INEUT = 0
 14  # NGPF = 10
 15  # NGPL = 100
 16  # NGPI = 10
 17  # NGINT = 0
 18  # NVOL = 1
 19  # 1% clad failure (instantaneous) - 0 hours
 20  RE109 Response Analysis QAD-CG
 21   1 1 1 14 4 20 15 1 1 3 1 0 10 100 10 0 1
 22   1 0 0
 23     6.630+09  0  0  0  0  0  0
 24      2  17  20000
 25     1 2 3 4 5 6 7 8 9 10 11 12 13 14 15 16 17
 26     1 1 1 1 1 1 1 1 1 1  1  1  1  1  1  1  1
 27      0    0            Sample piping by RE109
 28    RCC 1        15.2       0.0       0.0       0.0       0.0      16.6
 29                0.311
 30    RCC 2        15.2       0.0       0.0       0.0       0.0      16.6
 31                0.476
 32    SPH 3        15.2       0.0       0.0     0.311
 33    SPH 4        15.2       0.0       0.0     0.476
 34    RCC 5        15.2       0.0       0.0       0.0      11.4       0.0
 35                0.311
 36    RCC 6        15.2       0.0       0.0       0.0      11.4       0.0
 37                0.476
 38    SPH 7        15.2      11.4       0.0     0.311
 39    SPH 8        15.2      11.4       0.0     0.476
 40    RCC 9        10.2      11.4       0.0      5.08       0.0       0.0
 41                0.311
 42    RCC 10       10.2       0.0       0.0      5.08       0.0       0.0
 43                0.476
 44    SPH 11       10.2      11.4       0.0     0.311
 45    SPH 12       10.2      11.4       0.0     0.476
 46    RCC 13       10.2       0.0       0.0       0.0      11.4       0.0
 47                0.311
 48    RCC 14       10.2       0.0       0.0       0.0      11.4       0.0
 49                0.476
 50    SPH 15       10.2       0.0       0.0     0.311
 51    SPH 16       10.2       0.0       0.0     0.476
 52    RCC 17       5.08       0.0       0.0      5.08       0.0       0.0
 53                0.311
 54    RCC 18       5.08       0.0       0.0      5.08       0.0       0.0
 55                0.476
 56    SPH 19       5.08       0.0       0.0     0.311
 57    SPH 20       5.08       0.0       0.0     0.476
 58    RCC 21       5.08       0.0       0.0       0.0      11.4       0.0
 59                0.311
 60    RCC 22       5.08       0.0       0.0       0.0      11.4       0.0
 61                0.476
 62    SPH 23       5.08      11.4       0.0     0.311
 63    SPH 24       5.08      11.4       0.0     0.476
 64    RCC 25        0.0      11.4       0.0      5.08       0.0       0.0
 65                0.311
```

```
 66    RCC 26        0.0      11.4       0.0      5.08       0.0       0.0
 67                0.476
 68    SPH 27        0.0      11.4       0.0     0.311
 69    SPH 28        0.0      11.4       0.0     0.476
 70    RCC 29        0.0       0.0       0.0       0.0      11.4       0.0
 71                0.311
 72    RCC 30        0.0       0.0       0.0       0.0      11.4       0.0
 73                0.476
 74    SPH 31        0.0       0.0       0.0     0.311
 75    SPH 32        0.0       0.0       0.0     0.476
 76    RCC 33        0.0       0.0       0.0       0.0       0.0      14.1
 77                0.311
 78    RCC 34        0.0       0.0       0.0       0.0       0.0      14.1
 79                0.476
 80    RCC 35      -50.0       0.0       0.0     100.0       0.0       0.0
 81                 50.0
 82    RCC 36    -1000.0       0.0       0.0    2000.0       0.0       0.0
 83                500.0
 84    END
 85    H01    5     +1
 86    H02    5     +3     -1
 87    H03    5     +5     -3     -1
 88    H04    5     +7     -5
 89    H05    5     +9     -7     -5
 90    H06    5    +11     -9
 91    H07    5    +13    -11     -9
 92    H08    5    +15    -13
 93    H09    5    +17    -15    -13
 94    H10    5    +19    -17
 95    H11    5    +21    -19    -17
 96    H12    5    +23    -21
 97    H13    5    +25    -23    -21
 98    H14    5    +27    -25
 99    H15    5    +29    -27    -25
100    H16    5    +31    -29
101    H17    5    +33    -31
102    S01    5     +2     -1     -5
103    S02    5     +4     -3     -2     -6
104    S03    5     +6     -5     -2     -9
105    S04    5     +8     -7     -6    -10
106    S05    5    +10     -9     -6    -13
107    S06    5    +12    -11    -10    -14
108    S07    5    +14    -13    -10    -17
109    S08    5    +16    -15    -14    -18
110    S09    5    +18    -17    -14    -21
111    S10    5    +20    -19    -18    -22
112    S11    5    +22    -21    -18    -25
113    S12    5    +24    -23    -22    -26
114    S13    5    +26    -25    -22    -29
115    S14    5    +28    -27    -26    -30
116    S15    5    +30    -29    -26    -33
117    S16    5    +32    -31    -30    -34
118    S17    5    +34    -33    -30
119    AIR    5    +35     -2     -4     -6     -8    -10    -12    -14    -16
120                -18    -20    -22    -24    -26    -28    -30    -32    -34
121    UNI    5    +36    -35
122    END
123      1    1    1    1    1    1    1    1    1    1    1    1    1    1
124      1    1    1    1    1    1    1    1    1    1    1    1    1    1
125      1    1    1    1    1    1    1    1
126      1    1    1    1    1    1    1    1    1    1    1    1    1    1
127      1    1    1    2    2    2    2    2    2    2    2    2    2    2
128      2    2    2    2    2    2    4    0
129     11 1 6 7 8 12 13 14 16 19 20 24 25 26 28
130  WATE EXP
131     1.110E-01 0.0        0.0        8.890E-01 0.0        0.0        0.0
132     0.0       0.0        0.0        0.0       0.0        0.0        0.0
133     0.0       6.000E-03  0.0        0.0       0.0        0.0        8.000E-02
134     0.0       0.0        0.0        1.524E+00 1.600E-01  5.447E+00  8.020E-01
135     2.0003-02 1.180E-01  0.0        1.160E+00 5.700E-02  8.500E-02  3.420E-01
136     7.000E-03 4.000E-03  5.820E-01  0.0       0.0        2.600E-02  0.0
137     0.0       0.0        1.000E-03  2.710E-04 0.0        0.0        0.0
138     0.0       0.0        0.0        0.0       0.0        0.0        0.0
139  1.00E-02 2.50E-02 3.75E-02 5.75E-02 8.50E-02 1.25E-01 2.25E-01 3.75E-01
140  5.75E-01 8.50E-01 1.25E+00 1.75E+00 2.25E+00 2.75E+00 3.50E+00
141  1.00E-02 2.50E-02 3.75E-02 5.75E-02 8.50E-02 1.25E-01 2.25E-01 3.75E-01
142  5.75E-01 8.50E-01 1.25E+00 1.75E+00 2.25E+00 2.75E+00 3.50E+00
143  4.939E-05 9.937E-07 4.632E-07 1.070e-07 1.139E-07 3.141E-08 1.828E-07
144  2.166E-07 4.581E-07 4.415E-07 1.606E-07 6.460E-08 4.290E-08 3.345E-09
```

```
145  1.043E-10
146  1.0 1.0 1.0 1.0 1.0 1.0 1.0 1.0 1.0 1.0 1.0 1.0 1.0 1.0 1.0
147  0.0 - 3.5
148  0.000 -      0.012 -      0.030 -      0.050 -      0.070 -      0.090 -
149  0.200 -      0.300 -      0.450 -      0.700 -      1.000 -      1.500 -
150  2.000 -      2.500 -      3.000 -
151  MeV/cm**2-sec                R/hr                 w/g
152  1.0
153    7.62  5.72  -6.22    1  0  0  0
154    0     0     0      -1  0  0  0
155

1                    RE109 Response Analysis QAD-CG

     RECEIVER NUMBER  1    COORDINATES -
+                                        X    7.6200E+00     Y    5.7200E+00     Z   -6.2200E+00
1                    RE109 Response Analysis QAD-CG

     RECEIVER NUMBER  1    COORDINATES -
+                                        X    7.6200E+00     Y    5.7200E+00     Z   -6.2200E+00
 GRP     MEAN       ENERGY        DIRECT BEAM  MEAN BUILDUP          DOSE RATE              HEATING RATES IN IRON
 NO     ENERGY   GROUP LIMITS        FLUX        FACTORS      DIRECT BEAM  WITH BUILDUP   DIRECT BEAM  WITH
BUILDUP
         MEV         MEV          MeV/cm**2-se                              R/hr                     w/g
                                  c
 TOTAL  2.2033   0.0 - 3.5        6.6190E+07   1.1566E+00     5.5260E+00   6.3915E+00     6.6190E+07   7.2860E+07
 W/BU   2.2820


  1     0.0100   0.000 -          5.5420E+01   1.1996E+00     2.7372E-03   3.2836E-03     5.5420E+01   6.6483E+01
  2     0.0250    0.012 -         6.8858E+02   1.2401E+00     6.8424E-04   8.4849E-04     6.8858E+02   8.5387E+02
  3     0.0375    0.030 -         1.5352E+03   4.3932E+00     7.1108E-04   3.1239E-03     1.5352E+03   6.7442E+03
  4     0.0575    0.050 -         3.9436E+04   1.0532E+01     4.2196E-03   4.4441E-02     3.9436E+04   4.1534E+05
  5     0.0850    0.070 -         1.9247E+05   4.1007E+00     2.1923E-02   8.9899E-02     1.9247E+05   7.8928E+05
  6     0.1250    0.090 -         4.1921E+05   2.1197E+00     1.3167E-02   2.7910E-02     4.1921E+05   8.8858E+05
  7     0.2250   0.200 -          9.2045E+05   1.4157E+00     1.6826E-01   2.3820E-01     9.2045E+05   1.3031E+06
  8     0.3750    0.300 -         1.6354E+06   1.2377E+00     3.5422E-01   4.3840E-01     1.6354E+06   2.0240E+06
        0.5750    0.450 -         2.5997E+06   1.1688E+00     1.1909E+00   1.3919E+00     2.5997E+06   3.0384E+06
        0.8500    0.700 -         3.9518E+06   1.1254E+00     1.7447E+00   1.9635E+00     3.9518E+06   4.4474E+06
 11     1.2500    1.000 -         5.9541E+06   1.0952E+00     9.5622E-01   1.0473E+00     5.9541E+06   6.5212E+06
 12     1.7500    1.500 -         8.4840E+06   1.0756E+00     5.4807E-01   5.8952E-01     8.4840E+06   9.1256E+06
 13     2.2500   2.000 -          1.1024E+07   1.0641E+00     4.7295E-01   5.0325E-01     1.1024E+07   1.1731E+07
 14     2.7500    2.500 -         1.3572E+07   1.0562E+00     4.5398E-02   4.7951E-02     1.3572E+07   1.4335E+07
 15     3.5000    3.000 -         1.7395E+07   1.0482E+00     1.8143E-03   1.9017E-03     1.7395E+07   1.8233E+07
```

QAD Ouput File At Time 1 Hour Post-Accident

```
QAD with Combinatorial Geometry and option for Monte
Carlo source points: Developed at Shonka Research Associates, Inc. 1994
Version: 1.05
Serial #: 121698

This problem started at 15:55:00 on 10/12/04

          INPUT DATA LIST

   1  # Input File - RE109 Response Calculation
   2  # LSO = 1
   3  # MSO = 1
   4  # NSO = 1
   5  # MAT = 14
   6  # NCOMP = 4
   7  # NREG = 20
   8  # NRGY = 15
   9  # NBOUND= 1
  10  # NSOPT = 1
  11  # NZSO = 3
  12  # ISRC = 1
  13  # INEUT = 0
  14  # NGPF = 10
  15  # NGPL = 100
  16  # NGPI = 10
  17  # NGINT = 0
  18  # NVOL = 1
  19  # 1% clad failure (instantaneous) - 1 hours
  20  RE109 Response Analysis QAD-CG
  21   1 1 1 14 4 20 15 1 1 3 1 0 10 100 10 0 1
  22   1 0 0
```

```
 23     5.080+09  0  0  0  0  0  0
 24      2  17  20000
 25     1 2 3 4 5 6 7 8 9 10 11 12 13 14 15 16 17
 26     1 1 1 1 1 1 1 1 1 1  1  1  1  1  1  1  1
 27      0    0            Sample piping by RE109
 28    RCC 1          15.2       0.0       0.0       0.0       0.0      16.6
 29                  0.311
 30    RCC 2          15.2       0.0       0.0       0.0       0.0      16.6
 31                  0.476
 32    SPH 3          15.2       0.0       0.0     0.311
 33    SPH 4          15.2       0.0       0.0     0.476
 34    RCC 5          15.2       0.0       0.0       0.0      11.4       0.0
 35                  0.311
 36    RCC 6          15.2       0.0       0.0       0.0      11.4       0.0
 37                  0.476
 38    SPH 7          15.2      11.4       0.0     0.311
 39    SPH 8          15.2      11.4       0.0     0.476
 40    RCC 9          10.2      11.4       0.0      5.08       0.0       0.0
 41                  0.311
 42    RCC 10         10.2       0.0       0.0      5.08       0.0       0.0
 43                  0.476
 44    SPH 11         10.2      11.4       0.0     0.311
 45    SPH 12         10.2      11.4       0.0     0.476
 46    RCC 13         10.2       0.0       0.0       0.0      11.4       0.0
 47                  0.311
 48    RCC 14         10.2       0.0       0.0       0.0      11.4       0.0
 49                  0.476
 50    SPH 15         10.2       0.0       0.0     0.311
 51    SPH 16         10.2       0.0       0.0     0.476
 52    RCC 17         5.08       0.0       0.0      5.08       0.0       0.0
 53                  0.311
 54    RCC 18         5.08       0.0       0.0      5.08       0.0       0.0
 55                  0.476
 56    SPH 19         5.08       0.0       0.0     0.311
 57    SPH 20         5.08       0.0       0.0     0.476
 58    RCC 21         5.08       0.0       0.0       0.0      11.4       0.0
 59                  0.311
 60    RCC 22         5.08       0.0       0.0       0.0      11.4       0.0
 61                  0.476
 62    SPH 23         5.08      11.4       0.0     0.311
 63    SPH 24         5.08      11.4       0.0     0.476
 64    RCC 25          0.0      11.4       0.0      5.08       0.0       0.0
 65                  0.311
 66    RCC 26          0.0      11.4       0.0      5.08       0.0       0.0
 67                  0.476
 68    SPH 27          0.0      11.4       0.0     0.311
 69    SPH 28          0.0      11.4       0.0     0.476
 70    RCC 29          0.0       0.0       0.0       0.0      11.4       0.0
 71                  0.311
 72    RCC 30          0.0       0.0       0.0       0.0      11.4       0.0
 73                  0.476
 74    SPH 31          0.0       0.0       0.0     0.311
 75    SPH 32          0.0       0.0       0.0     0.476
 76    RCC 33          0.0       0.0       0.0       0.0       0.0      14.1
 77                  0.311
 78    RCC 34          0.0       0.0       0.0       0.0       0.0      14.1
 79                  0.476
 80    RCC 35        -50.0       0.0       0.0     100.0       0.0       0.0
 81                   50.0
 82    RCC 36      -1000.0       0.0       0.0    2000.0       0.0       0.0
 83                  500.0
 84    END
 85    H01    5     +1
 86    H02    5     +3     -1
 87    H03    5     +5     -3     -1
 88    H04    5     +7     -5
 89    H05    5     +9     -7     -5
 90    H06    5    +11     -9
 91    H07    5    +13    -11     -9
 92    H08    5    +15    -13
 93    H09    5    +17    -15    -13
 94    H10    5    +19    -17
 95    H11    5    +21    -19    -17
 96    H12    5    +23    -21
 97    H13    5    +25    -23    -21
 98    H14    5    +27    -25
 99    H15    5    +29    -27    -25
100    H16    5    +31    -29
101    H17    5    +33    -31
```

```
102    S01    5    +2    -1    -5
103    S02    5    +4    -3    -2    -6
104    S03    5    +6    -5    -2    -9
105    S04    5    +8    -7    -6   -10
106    S05    5   +10    -9    -6   -13
107    S06    5   +12   -11   -10   -14
108    S07    5   +14   -13   -10   -17
109    S08    5   +16   -15   -14   -18
110    S09    5   +18   -17   -14   -21
111    S10    5   +20   -19   -18   -22
112    S11    5   +22   -21   -18   -25
113    S12    5   +24   -23   -22   -26
114    S13    5   +26   -25   -22   -29
115    S14    5   +28   -27   -26   -30
116    S15    5   +30   -29   -26   -33
117    S16    5   +32   -31   -30   -34
118    S17    5   +34   -33   -30
119    AIR    5   +35    -2    -4    -6    -8   -10   -12   -14   -16
120               -18   -20   -22   -24   -26   -28   -30   -32   -34
121    UNI    5   +36   -35
122    END
123      1    1    1    1    1    1    1    1    1    1    1    1    1    1
124      1    1    1    1    1    1    1    1    1    1    1    1    1    1
125      1    1    1    1    1    1    1    1
126      1    1    1    1    1    1    1    1    1    1    1    1    1    1
127      1    1    1    2    2    2    2    2    2    2    2    2    2    2
128      2    2    2    2    2    2    4    0
129     11 1 6 7 8 12 13 14 16 19 20 24 25 26 28
130  WATE EXP
131     1.110E-01 0.0       0.0       8.890E-01 0.0       0.0       0.0
132     0.0       0.0       0.0       0.0       0.0       0.0       0.0
133     0.0       6.000E-03 0.0       0.0       0.0       0.0       8.000E-02
134     0.0       0.0       0.0       1.524E+00 1.600E-01 5.447E+00 8.020E-01
135     2.0003-02 1.180E-01 0.0       1.160E+00 5.700E-02 8.500E-02 3.420E-01
136     7.000E-03 4.000E-03 5.820E-01 0.0       0.0       2.600E-02 0.0
137     0.0       0.0       1.000E-03 2.710E-04 0.0       0.0       0.0
138     0.0       0.0       0.0       0.0       0.0       0.0       0.0
139  1.00E-02 2.50E-02 3.75E-02 5.75E-02 8.50E-02 1.25E-01 2.25E-01 3.75E-01
140  5.75E-01 8.50E-01 1.25E+00 1.75E+00 2.25E+00 2.75E+00 3.50E+00
141  1.00E-02 2.50E-02 3.75E-02 5.75E-02 8.50E-02 1.25E-01 2.25E-01 3.75E-01
142  5.75E-01 8.50E-01 1.25E+00 1.75E+00 2.25E+00 2.75E+00 3.50E+00
143  5.428E-05 1.110E-06 5.622E-07 1.226e-07 1.424E-07 3.237E-08 1.632E-07
144  1.998E-07 5.055E-07 3.496E-07 1.840E-07 5.476E-08 3.073E-08 4.626E-09
145  3.572E-10
146  1.0 1.0 1.0 1.0 1.0 1.0 1.0 1.0 1.0 1.0 1.0 1.0 1.0 1.0 1.0
147  0.0 - 3.5
148  0.000 -     0.012 -     0.030 -     0.050 -     0.070 -     0.090 -
149  0.200 -     0.300 -     0.450 -     0.700 -     1.000 -     1.500 -
150  2.000 -     2.500 -     3.000 -
151  MeV/cm**2-sec              R/hr                w/g
152  1.0
153    7.62  5.72  -6.22    1  0  0  0
154    0     0      0      -1  0  0  0
155
```

```
1                    RE109 Response Analysis QAD-CG

     RECEIVER NUMBER  1    COORDINATES -
+                                        X    7.6200E+00     Y    5.7200E+00     Z   -6.2200E+00
1                    RE109 Response Analysis QAD-CG

     RECEIVER NUMBER  1    COORDINATES -
+                                        X    7.6200E+00     Y    5.7200E+00     Z   -6.2200E+00
 GRP     MEAN       ENERGY        DIRECT BEAM  MEAN BUILDUP          DOSE RATE              HEATING RATES IN IRON
 NO     ENERGY   GROUP LIMITS        FLUX        FACTORS      DIRECT BEAM  WITH BUILDUP   DIRECT BEAM  WITH
BUILDUP
         MEV          MEV          MeV/cm**2-se                                R/hr                     w/g
                                   c
 TOTAL  2.2033   0.0 - 3.5        5.0716E+07   1.1638E+00     3.9774E+00   4.6288E+00     5.0716E+07   5.5826E+07
 W/BU   2.2820


  1     0.0100   0.000 -          4.2464E+01   1.1996E+00     2.3049E-03   2.7650E-03     4.2464E+01   5.0940E+01
        0.0250    0.012 -         5.2760E+02   1.2401E+00     5.8563E-04   7.2622E-04     5.2760E+02   6.5425E+02
        0.0375    0.030 -         1.1763E+03   4.3932E+00     6.6129E-04   2.9052E-03     1.1763E+03   5.1675E+03
  4     0.0575    0.050 -         3.0216E+04   1.0532E+01     3.7045E-03   3.9016E-02     3.0216E+04   3.1824E+05
  5     0.0850    0.070 -         1.4748E+05   4.1007E+00     2.1000E-02   8.6117E-02     1.4748E+05   6.0476E+05
  6     0.1250    0.090 -         3.2120E+05   2.1197E+00     1.0397E-02   2.2039E-02     3.2120E+05   6.8084E+05
  7     0.2250   0.200 -          7.0526E+05   1.4157E+00     1.1510E-01   1.6295E-01     7.0526E+05   9.9845E+05
```

8	0.3750	0.300 -	1.2530E+06	1.2377E+00	2.5036E-01	3.0986E-01	1.2530E+06	1.5508E+06
9	0.5750	0.450 -	1.9919E+06	1.1688E+00	1.0069E+00	1.1769E+00	1.9919E+06	2.3281E+06
10	0.8500	0.700 -	3.0279E+06	1.1254E+00	1.0586E+00	1.1913E+00	3.0279E+06	3.4077E+06
11	1.2500	1.000 -	4.5621E+06	1.0952E+00	8.3943E-01	9.1938E-01	4.5621E+06	4.9966E+06
12	1.7500	1.500 -	6.5006E+06	1.0756E+00	3.5597E-01	3.8289E-01	6.5006E+06	6.9922E+06
13	2.2500	2.000 -	8.4471E+06	1.0641E+00	2.5958E-01	2.7621E-01	8.4471E+06	8.9882E+06
14	2.7500	2.500 -	1.0399E+07	1.0562E+00	4.8106E-02	5.0811E-02	1.0399E+07	1.0984E+07
15	3.5000	3.000 -	1.3328E+07	1.0482E+00	4.7609E-03	4.9903E-03	1.3328E+07	1.3971E+07

QAD Ouput File At Time 2 Hours Post-Accident

```
 QAD with Combinatorial Geometry and option for Monte
Carlo source points: Developed at Shonka Research Associates, Inc. 1994
Version: 1.05
Serial #: 121698

This problem started at 15:56:44 on 10/12/04

          INPUT DATA LIST

  1  # Input File - RE109 Response Calculation
  2  # LSO = 1
  3  # MSO = 1
  4  # NSO = 1
  5  # MAT = 14
  6  # NCOMP = 4
  7  # NREG = 20
  8  # NRGY = 15
  9  # NBOUND= 1
 10  # NSOPT = 1
 11  # NZSO = 3
 12  # ISRC = 1
 13  # INEUT = 0
 14  # NGPF = 10
 15  # NGPL = 100
 16  # NGPI = 10
 17  # NGINT = 0
 18  # NVOL = 1
 19  # 1% clad failure (instantaneous) - 2 hours
 20  RE109 Response Analysis QAD-CG
 21   1 1 1 14 4 20 15 1 1 3 1 0 10 100 10 0 1
 22   1 0 0
 23     4.070+09  0  0  0  0  0  0
 24      2  17  20000
 25     1 2 3 4 5 6 7 8 9 10 11 12 13 14 15 16 17
 26     1 1 1 1 1 1 1 1 1 1  1  1  1  1  1  1  1
 27      0    0            Sample piping by RE109
 28    RCC 1          15.2       0.0       0.0       0.0       0.0      16.6
 29                  0.311
 30    RCC 2          15.2       0.0       0.0       0.0       0.0      16.6
 31                  0.476
 32    SPH 3          15.2       0.0       0.0     0.311
 33    SPH 4          15.2       0.0       0.0     0.476
 34    RCC 5          15.2       0.0       0.0       0.0      11.4       0.0
 35                  0.311
 36    RCC 6          15.2       0.0       0.0       0.0      11.4       0.0
 37                  0.476
 38    SPH 7          15.2      11.4       0.0     0.311
 39    SPH 8          15.2      11.4       0.0     0.476
 40    RCC 9          10.2      11.4       0.0      5.08       0.0       0.0
 41                  0.311
 42    RCC 10         10.2       0.0       0.0      5.08       0.0       0.0
 43                  0.476
 44    SPH 11         10.2      11.4       0.0     0.311
 45    SPH 12         10.2      11.4       0.0     0.476
 46    RCC 13         10.2       0.0       0.0       0.0      11.4       0.0
 47                  0.311
 48    RCC 14         10.2       0.0       0.0       0.0      11.4       0.0
 49                  0.476
 50    SPH 15         10.2       0.0       0.0     0.311
 51    SPH 16         10.2       0.0       0.0     0.476
 52    RCC 17         5.08       0.0       0.0      5.08       0.0       0.0
 53                  0.311
 54    RCC 18         5.08       0.0       0.0      5.08       0.0       0.0
 55                  0.476
 56    SPH 19         5.08       0.0       0.0     0.311
 57    SPH 20         5.08       0.0       0.0     0.476
 58    RCC 21         5.08       0.0       0.0       0.0      11.4       0.0
```

```
                0.311
RCC 22           5.08       0.0       0.0       0.0      11.4       0.0
                0.476
SPH 23           5.08      11.4       0.0     0.311
SPH 24           5.08      11.4       0.0     0.476
RCC 25            0.0      11.4       0.0      5.08       0.0       0.0
                0.311
RCC 26            0.0      11.4       0.0      5.08       0.0       0.0
                0.476
SPH 27            0.0      11.4       0.0     0.311
SPH 28            0.0      11.4       0.0     0.476
RCC 29            0.0       0.0       0.0       0.0      11.4       0.0
                0.311
RCC 30            0.0       0.0       0.0       0.0      11.4       0.0
                0.476
SPH 31            0.0       0.0       0.0     0.311
SPH 32            0.0       0.0       0.0     0.476
RCC 33            0.0       0.0       0.0       0.0       0.0      14.1
                0.311
RCC 34            0.0       0.0       0.0       0.0       0.0      14.1
                0.476
RCC 35          -50.0       0.0       0.0     100.0       0.0       0.0
                 50.0
RCC 36       -1000.0       0.0       0.0    2000.0       0.0       0.0
                500.0
END
H01    5    +1
H02    5    +3     -1
H03    5    +5     -3     -1
H04    5    +7     -5
H05    5    +9     -7     -5
H06    5   +11     -9
H07    5   +13    -11     -9
H08    5   +15    -13
H09    5   +17    -15    -13
H10    5   +19    -17
H11    5   +21    -19    -17
H12    5   +23    -21
H13    5   +25    -23    -21
H14    5   +27    -25
H15    5   +29    -27    -25
H16    5   +31    -29
H17    5   +33    -31
S01    5    +2     -1     -5
S02    5    +4     -3     -2     -6
S03    5    +6     -5     -2     -9
S04    5    +8     -7     -6    -10
S05    5   +10     -9     -6    -13
S06    5   +12    -11    -10    -14
S07    5   +14    -13    -10    -17
S08    5   +16    -15    -14    -18
S09    5   +18    -17    -14    -21
S10    5   +20    -19    -18    -22
S11    5   +22    -21    -18    -25
S12    5   +24    -23    -22    -26
S13    5   +26    -25    -22    -29
S14    5   +28    -27    -26    -30
S15    5   +30    -29    -26    -33
S16    5   +32    -31    -30    -34
S17    5   +34    -33    -30
AIR    5   +35     -2     -4     -6     -8    -10    -12    -14    -16
           -18    -20    -22    -24    -26    -28    -30    -32    -34
UNI    5   +36    -35
END
  1    1    1    1    1    1    1    1    1    1    1    1    1    1
  1    1    1    1    1    1    1    1    1    1    1    1    1    1
  1    1    1    1    1    1    1    1
  1    1    1    1    1    1    1    1    1    1    1    1    1    1
  1    1    1    2    2    2    2    2    2    2    2    2    2    2
  2    2    2    2    2    2    4    0
 11 1 6 7 8 12 13 14 16 19 20 24 25 26 28
WATE EXP
 1.110E-01 0.0        0.0        8.890E-01 0.0        0.0        0.0
 0.0       0.0        0.0        0.0       0.0        0.0        0.0
 0.0       6.000E-03  0.0        0.0       0.0        0.0        8.000E-02
 0.0       0.0        0.0        1.524E+00 1.600E-01  5.447E+00  8.020E-01
 2.0003-02 1.180E-01  0.0        1.160E+00 5.700E-02  8.500E-02  3.420E-01
 7.000E-03 4.000E-03  5.820E-01  0.0       0.0        2.600E-02  0.0
 0.0       0.0        1.000E-03  2.710E-04 0.0        0.0        0.0
```

```
138     0.0       0.0       0.0       0.0       0.0       0.0       0.0
139  1.00E-02 2.50E-02 3.75E-02 5.75E-02 8.50E-02 1.25E-01 2.25E-01 3.75E-01
140  5.75E-01 8.50E-01 1.25E+00 1.75E+00 2.25E+00 2.75E+00 3.50E+00
141  1.00E-02 2.50E-02 3.75E-02 5.75E-02 8.50E-02 1.25E-01 2.25E-01 3.75E-01
142  5.75E-01 8.50E-01 1.25E+00 1.75E+00 2.25E+00 2.75E+00 3.50E+00
143  5.366E-05 1.124E-06 6.507E-07 1.195e-07 1.643E-07 2.855E-08 1.869E-07
144  2.182E-07 5.279E-07 2.896E-07 1.730E-07 5.334E-08 2.746E-08 3.276E-09
145  3.086E-10
146  1.0 1.0 1.0 1.0 1.0 1.0 1.0 1.0 1.0 1.0 1.0 1.0 1.0 1.0 1.0
147  0.0 - 3.5
148  0.000 -      0.012 -      0.030 -      0.050 -      0.070 -      0.090 -
149  0.200 -      0.300 -      0.450 -      0.700 -      1.000 -      1.500 -
150  2.000 -      2.500 -      3.000 -
151  MeV/cm**2-sec              R/hr                w/g
152  1.0
153    7.62  5.72  -6.22    1  0  0  0
154    0     0      0      -1  0  0  0
155

1                    RE109 Response Analysis QAD-CG

     RECEIVER NUMBER  1    COORDINATES -
+                                        X    7.6200E+00     Y    5.7200E+00     Z   -6.2200E+00
1                    RE109 Response Analysis QAD-CG

     RECEIVER NUMBER  1    COORDINATES -
+                                        X    7.6200E+00     Y    5.7200E+00     Z   -6.2200E+00
 GRP     MEAN       ENERGY        DIRECT BEAM  MEAN BUILDUP          DOSE RATE              HEATING RATES IN IRON
 NO     ENERGY   GROUP LIMITS       FLUX        FACTORS      DIRECT BEAM  WITH BUILDUP   DIRECT BEAM  WITH
BUILDUP
         MEV         MEV          MeV/cm**2-se                              R/hr                    w/g
                                  c
 TOTAL  2.2033   0.0 - 3.5        4.0633E+07   1.1716E+00     3.0288E+00   3.5484E+00     4.0633E+07   4.4727E+07
 W/BU   2.2820


  1     0.0100   0.000 -          3.4021E+01   1.1996E+00     1.8256E-03   2.1900E-03     3.4021E+01   4.0812E+01
  2     0.0250    0.012 -         4.2270E+02   1.2401E+00     4.7512E-04   5.8917E-04     4.2270E+02   5.2417E+02
  3     0.0375    0.030 -         9.4239E+02   4.3932E+00     6.1322E-04   2.6940E-03     9.4239E+02   4.1401E+03
  4     0.0575    0.050 -         2.4209E+04   1.0532E+01     2.8929E-03   3.0468E-02     2.4209E+04   2.5497E+05
  5     0.0850    0.070 -         1.1815E+05   4.1007E+00     1.9413E-02   7.9606E-02     1.1815E+05   4.8452E+05
  6     0.1250    0.090 -         2.5734E+05   2.1197E+00     7.3471E-03   1.5573E-02     2.5734E+05   5.4548E+05
  7     0.2250   0.200 -          5.6504E+05   1.4157E+00     1.0561E-01   1.4951E-01     5.6504E+05   7.9994E+05
  8     0.3750    0.300 -         1.0039E+06   1.2377E+00     2.1905E-01   2.7111E-01     1.0039E+06   1.2425E+06
  9     0.5750    0.450 -         1.5959E+06   1.1688E+00     8.4246E-01   9.8465E-01     1.5959E+06   1.8652E+06
 10     0.8500    0.700 -         2.4259E+06   1.1254E+00     7.0254E-01   7.9065E-01     2.4259E+06   2.7301E+06
 11     1.2500    1.000 -         3.6551E+06   1.0952E+00     6.3233E-01   6.9255E-01     3.6551E+06   4.0032E+06
 12     1.7500    1.500 -         5.2081E+06   1.0756E+00     2.7780E-01   2.9881E-01     5.2081E+06   5.6020E+06
 13     2.2500   2.000 -          6.7677E+06   1.0641E+00     1.8584E-01   1.9774E-01     6.7677E+06   7.2012E+06
 14     2.7500    2.500 -         8.3315E+06   1.0562E+00     2.7294E-02   2.8829E-02     8.3315E+06   8.8000E+06
 15     3.5000    3.000 -         1.0678E+07   1.0482E+00     3.2954E-03   3.4542E-03     1.0678E+07   1.1193E+07
```

QAD Ouput File At Time 4 Hours Post-Accident

```
 QAD with Combinatorial Geometry and option for Monte
Carlo source points: Developed at Shonka Research Associates, Inc. 1994
Version: 1.05
Serial #: 121698

This problem started at 15:58:27 on 10/12/04

          INPUT DATA LIST

   1  # Input File - RE109 Response Calculation
   2  # LSO = 1
   3  # MSO = 1
   4  # NSO = 1
   5  # MAT = 14
   6  # NCOMP = 4
   7  # NREG = 20
   8  # NRGY = 15
   9  # NBOUND= 1
  10  # NSOPT = 1
  11  # NZSO = 3
  12  # ISRC = 1
  13  # INEUT = 0
  14  # NGPF = 10
  15  # NGPL = 100
```

```
16  # NGPI = 10
17  # NGINT = 0
18  # NVOL = 1
19  # 1% clad failure (instantaneous) - 4 hours
20  RE109 Response Analysis QAD-CG
21   1 1 1 14 4 20 15 1 1 3 1 0 10 100 10 0 1
22   1 0 0
23     3.080+09  0  0  0  0  0  0
24      2  17  20000
25     1 2 3 4 5 6 7 8 9 10 11 12 13 14 15 16 17
26     1 1 1 1 1 1 1 1 1 1  1  1  1  1  1  1  1
27      0    0            Sample piping by RE109
28    RCC 1          15.2        0.0        0.0        0.0        0.0       16.6
29                  0.311
30    RCC 2          15.2        0.0        0.0        0.0        0.0       16.6
31                  0.476
32    SPH 3          15.2        0.0        0.0      0.311
33    SPH 4          15.2        0.0        0.0      0.476
34    RCC 5          15.2        0.0        0.0        0.0       11.4        0.0
35                  0.311
36    RCC 6          15.2        0.0        0.0        0.0       11.4        0.0
37                  0.476
38    SPH 7          15.2       11.4        0.0      0.311
39    SPH 8          15.2       11.4        0.0      0.476
40    RCC 9          10.2       11.4        0.0       5.08        0.0        0.0
41                  0.311
42    RCC 10         10.2        0.0        0.0       5.08        0.0        0.0
43                  0.476
44    SPH 11         10.2       11.4        0.0      0.311
45    SPH 12         10.2       11.4        0.0      0.476
46    RCC 13         10.2        0.0        0.0        0.0       11.4        0.0
47                  0.311
48    RCC 14         10.2        0.0        0.0        0.0       11.4        0.0
49                  0.476
50    SPH 15         10.2        0.0        0.0      0.311
51    SPH 16         10.2        0.0        0.0      0.476
52    RCC 17         5.08        0.0        0.0       5.08        0.0        0.0
53                  0.311
54    RCC 18         5.08        0.0        0.0       5.08        0.0        0.0
55                  0.476
56    SPH 19         5.08        0.0        0.0      0.311
57    SPH 20         5.08        0.0        0.0      0.476
58    RCC 21         5.08        0.0        0.0        0.0       11.4        0.0
59                  0.311
60    RCC 22         5.08        0.0        0.0        0.0       11.4        0.0
61                  0.476
62    SPH 23         5.08       11.4        0.0      0.311
63    SPH 24         5.08       11.4        0.0      0.476
64    RCC 25          0.0       11.4        0.0       5.08        0.0        0.0
65                  0.311
66    RCC 26          0.0       11.4        0.0       5.08        0.0        0.0
67                  0.476
68    SPH 27          0.0       11.4        0.0      0.311
69    SPH 28          0.0       11.4        0.0      0.476
70    RCC 29          0.0        0.0        0.0        0.0       11.4        0.0
71                  0.311
72    RCC 30          0.0        0.0        0.0        0.0       11.4        0.0
73                  0.476
74    SPH 31          0.0        0.0        0.0      0.311
75    SPH 32          0.0        0.0        0.0      0.476
76    RCC 33          0.0        0.0        0.0        0.0        0.0       14.1
77                  0.311
78    RCC 34          0.0        0.0        0.0        0.0        0.0       14.1
79                  0.476
80    RCC 35        -50.0        0.0        0.0      100.0        0.0        0.0
81                   50.0
82    RCC 36      -1000.0        0.0        0.0     2000.0        0.0        0.0
83                  500.0
84    END
85    H01    5     +1
86    H02    5     +3     -1
87    H03    5     +5     -3     -1
88    H04    5     +7     -5
89    H05    5     +9     -7     -5
90    H06    5    +11     -9
91    H07    5    +13    -11     -9
92    H08    5    +15    -13
93    H09    5    +17    -15    -13
94    H10    5    +19    -17
```

```
 95    H11    5    +21    -19    -17
 96    H12    5    +23    -21
 97    H13    5    +25    -23    -21
 98    H14    5    +27    -25
 99    H15    5    +29    -27    -25
100    H16    5    +31    -29
101    H17    5    +33    -31
102    S01    5     +2     -1     -5
103    S02    5     +4     -3     -2     -6
104    S03    5     +6     -5     -2     -9
105    S04    5     +8     -7     -6    -10
106    S05    5    +10     -9     -6    -13
107    S06    5    +12    -11    -10    -14
108    S07    5    +14    -13    -10    -17
109    S08    5    +16    -15    -14    -18
110    S09    5    +18    -17    -14    -21
111    S10    5    +20    -19    -18    -22
112    S11    5    +22    -21    -18    -25
113    S12    5    +24    -23    -22    -26
114    S13    5    +26    -25    -22    -29
115    S14    5    +28    -27    -26    -30
116    S15    5    +30    -29    -26    -33
117    S16    5    +32    -31    -30    -34
118    S17    5    +34    -33    -30
119    AIR    5    +35     -2     -4     -6     -8    -10    -12    -14    -16
120                -18    -20    -22    -24    -26    -28    -30    -32    -34
121    UNI    5    +36    -35
122    END
123      1    1    1    1    1    1    1    1    1    1    1    1    1    1
124      1    1    1    1    1    1    1    1    1    1    1    1    1    1
125      1    1    1    1    1    1    1    1
126      1    1    1    1    1    1    1    1    1    1    1    1    1    1
127      1    1    1    2    2    2    2    2    2    2    2    2    2    2
128      2    2    2    2    2    2    4    0
129     11 1 6 7 8 12 13 14 16 19 20 24 25 26 28
130  WATE EXP
131     1.110E-01 0.0       0.0       8.890E-01 0.0       0.0       0.0
132     0.0       0.0       0.0       0.0       0.0       0.0       0.0
133     0.0       6.000E-03 0.0       0.0       0.0       0.0       8.000E-02
134     0.0       0.0       0.0       1.524E+00 1.600E-01 5.447E+00 8.020E-01
135     2.0003-02 1.180E-01 0.0       1.160E+00 5.700E-02 8.500E-02 3.420E-01
136     7.000E-03 4.000E-03 5.820E-01 0.0       0.0       2.600E-02 0.0
137     0.0       0.0       1.000E-03 2.710E-04 0.0       0.0       0.0
138     0.0       0.0       0.0       0.0       0.0       0.0       0.0
139  1.00E-02 2.50E-02 3.75E-02 5.75E-02 8.50E-02 1.25E-01 2.25E-01 3.75E-01
140  5.75E-01 8.50E-01 1.25E+00 1.75E+00 2.25E+00 2.75E+00 3.50E+00
141  1.00E-02 2.50E-02 3.75E-02 5.75E-02 8.50E-02 1.25E-01 2.25E-01 3.75E-01
142  5.75E-01 8.50E-01 1.25E+00 1.75E+00 2.25E+00 2.75E+00 3.50E+00
143  5.098E-05 1.112E-06 7.854E-07 1.104e-07 1.966E-07 2.296E-08 2.280E-07
144  2.524E-07 5.450E-07 2.180E-07 1.606E-07 4.789E-08 2.166E-08 1.661E-09
145  2.079E-10
146  1.0 1.0 1.0 1.0 1.0 1.0 1.0 1.0 1.0 1.0 1.0 1.0 1.0 1.0 1.0
147  0.0 - 3.5
148  0.000 -      0.012 -      0.030 -      0.050 -      0.070 -      0.090 -
149  0.200 -      0.300 -      0.450 -      0.700 -      1.000 -      1.500 -
150  2.000 -      2.500 -      3.000 -
151  MeV/cm**2-sec                R/hr                 w/g
152  1.0
153    7.62  5.72  -6.22    1  0  0  0
154    0     0     0      -1  0  0  0
155

1                    RE109 Response Analysis QAD-CG

     RECEIVER NUMBER  1    COORDINATES -
+                                        X    7.6200E+00     Y    5.7200E+00     Z   -6.2200E+00
1                    RE109 Response Analysis QAD-CG

     RECEIVER NUMBER  1    COORDINATES -
+                                        X    7.6200E+00     Y    5.7200E+00     Z   -6.2200E+00
 GRP     MEAN       ENERGY        DIRECT BEAM  MEAN BUILDUP          DOSE RATE              HEATING RATES IN IRON
 NO     ENERGY   GROUP LIMITS        FLUX        FACTORS      DIRECT BEAM  WITH BUILDUP   DIRECT BEAM  WITH
"ILDUP
         MEV          MEV          MeV/cm**2-se                                R/hr                      w/g
                                   c
 TOTAL  2.2033   0.0 - 3.5        3.0749E+07   1.1844E+00     2.1300E+00   2.5228E+00     3.0749E+07   3.3847E+07
 W/BU   2.2820
```

1	0.0100	0.000 -	2.5746E+01	1.1996E+00	1.3125E-03	1.5745E-03	2.5746E+01	3.0885E+01
2	0.0250	0.012 -	3.1988E+02	1.2401E+00	3.5571E-04	4.4110E-04	3.1988E+02	3.9667E+02
3	0.0375	0.030 -	7.1316E+02	4.3932E+00	5.6012E-04	2.4607E-03	7.1316E+02	3.1331E+03
4	0.0575	0.050 -	1.8320E+04	1.0532E+01	2.0225E-03	2.1301E-02	1.8320E+04	1.9295E+05
5	0.0850	0.070 -	8.9414E+04	4.1007E+00	1.7579E-02	7.2086E-02	8.9414E+04	3.6666E+05
6	0.1250	0.090 -	1.9475E+05	2.1197E+00	4.4714E-03	9.4778E-03	1.9475E+05	4.1279E+05
7	0.2250	0.200 -	4.2760E+05	1.4157E+00	9.7493E-02	1.3802E-01	4.2760E+05	6.0536E+05
8	0.3750	0.300 -	7.5972E+05	1.2377E+00	1.9175E-01	2.3732E-01	7.5972E+05	9.4027E+05
9	0.5750	0.450 -	1.2077E+06	1.1688E+00	6.5819E-01	7.6928E-01	1.2077E+06	1.4115E+06
10	0.8500	0.700 -	1.8358E+06	1.1254E+00	4.0021E-01	4.5040E-01	1.8358E+06	2.0661E+06
11	1.2500	1.000 -	2.7660E+06	1.0952E+00	4.4422E-01	4.8653E-01	2.7660E+06	3.0294E+06
12	1.7500	1.500 -	3.9413E+06	1.0756E+00	1.8875E-01	2.0302E-01	3.9413E+06	4.2394E+06
13	2.2500	2.000 -	5.1215E+06	1.0641E+00	1.1093E-01	1.1804E-01	5.1215E+06	5.4495E+06
14	2.7500	2.500 -	6.3049E+06	1.0562E+00	1.0472E-02	1.1061E-02	6.3049E+06	6.6594E+06
15	3.5000	3.000 -	8.0810E+06	1.0482E+00	1.6800E-03	1.7610E-03	8.0810E+06	8.4704E+06

QAD Ouput File At Time 8 Hours Post-Accident

```
QAD with Combinatorial Geometry and option for Monte
Carlo source points: Developed at Shonka Research Associates, Inc. 1994
Version: 1.05
Serial #: 121698

This problem started at 15:59:45 on 10/12/04

          INPUT DATA LIST

  1  # Input File - RE109 Response Calculation
  2  # LSO = 1
  3  # MSO = 1
  4  # NSO = 1
  5  # MAT = 14
  6  # NCOMP = 4
  7  # NREG = 20
  8  # NRGY = 15
  9  # NBOUND= 1
 10  # NSOPT = 1
 11  # NZSO = 3
 12  # ISRC = 1
 13  # INEUT = 0
 14  # NGPF = 10
 15  # NGPL = 100
 16  # NGPI = 10
 17  # NGINT = 0
 18  # NVOL = 1
 19  # 1% clad failure (instantaneous) - 8 hours
 20  RE109 Response Analysis QAD-CG
 21   1 1 1 14 4 20 15 1 1 3 1 0 10 100 10 0 1
 22   1 0 0
 23     2.350+09  0  0  0  0  0  0
 24      2  17  20000
 25     1 2 3 4 5 6 7 8 9 10 11 12 13 14 15 16 17
 26     1 1 1 1 1 1 1 1 1 1  1  1  1  1  1  1  1
 27      0    0          Sample piping by RE109
 28    RCC 1        15.2       0.0       0.0       0.0       0.0      16.6
 29                0.311
 30    RCC 2        15.2       0.0       0.0       0.0       0.0      16.6
 31                0.476
 32    SPH 3        15.2       0.0       0.0     0.311
 33    SPH 4        15.2       0.0       0.0     0.476
 34    RCC 5        15.2       0.0       0.0       0.0      11.4       0.0
 35                0.311
 36    RCC 6        15.2       0.0       0.0       0.0      11.4       0.0
 37                0.476
 38    SPH 7        15.2      11.4       0.0     0.311
 39    SPH 8        15.2      11.4       0.0     0.476
 40    RCC 9        10.2      11.4       0.0      5.08       0.0       0.0
 41                0.311
 42    RCC 10       10.2       0.0       0.0      5.08       0.0       0.0
 43                0.476
 44    SPH 11       10.2      11.4       0.0     0.311
 45    SPH 12       10.2      11.4       0.0     0.476
 46    RCC 13       10.2       0.0       0.0       0.0      11.4       0.0
 47                0.311
 48    RCC 14       10.2       0.0       0.0       0.0      11.4       0.0
 49                0.476
 50    SPH 15       10.2       0.0       0.0     0.311
 51    SPH 16       10.2       0.0       0.0     0.476
```

```
 52    RCC 17        5.08       0.0       0.0       5.08       0.0       0.0
 53                 0.311
 54    RCC 18        5.08       0.0       0.0       5.08       0.0       0.0
 55                 0.476
 56    SPH 19        5.08       0.0       0.0      0.311
 57    SPH 20        5.08       0.0       0.0      0.476
 58    RCC 21        5.08       0.0       0.0        0.0      11.4       0.0
 59                 0.311
 60    RCC 22        5.08       0.0       0.0        0.0      11.4       0.0
 61                 0.476
 62    SPH 23        5.08      11.4       0.0      0.311
 63    SPH 24        5.08      11.4       0.0      0.476
 64    RCC 25         0.0      11.4       0.0       5.08       0.0       0.0
 65                 0.311
 66    RCC 26         0.0      11.4       0.0       5.08       0.0       0.0
 67                 0.476
 68    SPH 27         0.0      11.4       0.0      0.311
 69    SPH 28         0.0      11.4       0.0      0.476
 70    RCC 29         0.0       0.0       0.0        0.0      11.4       0.0
 71                 0.311
 72    RCC 30         0.0       0.0       0.0        0.0      11.4       0.0
 73                 0.476
 74    SPH 31         0.0       0.0       0.0      0.311
 75    SPH 32         0.0       0.0       0.0      0.476
 76    RCC 33         0.0       0.0       0.0        0.0       0.0      14.1
 77                 0.311
 78    RCC 34         0.0       0.0       0.0        0.0       0.0      14.1
 79                 0.476
 80    RCC 35       -50.0       0.0       0.0      100.0       0.0       0.0
 81                  50.0
 82    RCC 36     -1000.0       0.0       0.0     2000.0       0.0       0.0
 83                 500.0
 84    END
 85    H01    5     +1
 86    H02    5     +3     -1
 87    H03    5     +5     -3     -1
 88    H04    5     +7     -5
 89    H05    5     +9     -7     -5
 90    H06    5    +11     -9
 91    H07    5    +13    -11     -9
 92    H08    5    +15    -13
 93    H09    5    +17    -15    -13
 94    H10    5    +19    -17
 95    H11    5    +21    -19    -17
 96    H12    5    +23    -21
 97    H13    5    +25    -23    -21
 98    H14    5    +27    -25
 99    H15    5    +29    -27    -25
100    H16    5    +31    -29
101    H17    5    +33    -31
102    S01    5     +2     -1     -5
103    S02    5     +4     -3     -2     -6
104    S03    5     +6     -5     -2     -9
105    S04    5     +8     -7     -6    -10
106    S05    5    +10     -9     -6    -13
107    S06    5    +12    -11    -10    -14
108    S07    5    +14    -13    -10    -17
109    S08    5    +16    -15    -14    -18
110    S09    5    +18    -17    -14    -21
111    S10    5    +20    -19    -18    -22
112    S11    5    +22    -21    -18    -25
113    S12    5    +24    -23    -22    -26
114    S13    5    +26    -25    -22    -29
115    S14    5    +28    -27    -26    -30
116    S15    5    +30    -29    -26    -33
117    S16    5    +32    -31    -30    -34
118    S17    5    +34    -33    -30
119    AIR    5    +35     -2     -4     -6     -8    -10    -12    -14    -16
120                -18    -20    -22    -24    -26    -28    -30    -32    -34
121    UNI    5    +36    -35
122    END
123      1    1    1    1    1    1    1    1    1    1    1    1    1    1
124      1    1    1    1    1    1    1    1    1    1    1    1    1    1
125      1    1    1    1    1    1    1    1
126      1    1    1    1    1    1    1    1    1    1    1    1    1    1
127      1    1    1    2    2    2    2    2    2    2    2    2    2    2
128      2    2    2    2    2    2    4    0
129     11 1 6 7 8 12 13 14 16 19 20 24 25 26 28
130  WATE EXP
```

```
131     1.110E-01 0.0       0.0       8.890E-01 0.0       0.0       0.0
132     0.0       0.0       0.0       0.0       0.0       0.0       0.0
133     0.0       6.000E-03 0.0       0.0       0.0       0.0       8.000E-02
134     0.0       0.0       0.0       1.524E+00 1.600E-01 5.447E+00 8.020E-01
135     2.0003-02 1.180E-01 0.0       1.160E+00 5.700E-02 8.500E-02 3.420E-01
136     7.000E-03 4.000E-03 5.820E-01 0.0       0.0       2.600E-02 0.0
137     0.0       0.0       1.000E-03 2.710E-04 0.0       0.0       0.0
138     0.0       0.0       0.0       0.0       0.0       0.0       0.0
139  1.00E-02 2.50E-02 3.75E-02 5.75E-02 8.50E-02 1.25E-01 2.25E-01 3.75E-01
140  5.75E-01 8.50E-01 1.25E+00 1.75E+00 2.25E+00 2.75E+00 3.50E+00
141  1.00E-02 2.50E-02 3.75E-02 5.75E-02 8.50E-02 1.25E-01 2.25E-01 3.75E-01
142  5.75E-01 8.50E-01 1.25E+00 1.75E+00 2.25E+00 2.75E+00 3.50E+00
143  4.645E-05 1.070E-06 9.540E-07 9.685e-08 2.373E-07 1.758E-08 2.706E-07
144  3.005E-07 5.484E-07 1.732E-07 1.374E-07 3.509E-08 1.169E-08 5.431E-10
145  9.238E-11
146  1.0 1.0 1.0 1.0 1.0 1.0 1.0 1.0 1.0 1.0 1.0 1.0 1.0 1.0 1.0
147  0.0 - 3.5
148  0.000 -      0.012 -      0.030 -      0.050 -      0.070 -      0.090 -
149  0.200 -      0.300 -      0.450 -      0.700 -      1.000 -      1.500 -
150  2.000 -      2.500 -      3.000 -
151  MeV/cm**2-sec              R/hr                     w/g
152  1.0
153    7.62  5.72  -6.22    1  0  0  0
154    0     0     0      -1  0  0  0
155

1                    RE109 Response Analysis QAD-CG

     RECEIVER NUMBER  1    COORDINATES -
+                                        X    7.6200E+00    Y    5.7200E+00     Z   -6.2200E+00
1                    RE109 Response Analysis QAD-CG

     RECEIVER NUMBER  1    COORDINATES -
+                                        X    7.6200E+00    Y    5.7200E+00     Z   -6.2200E+00
 GRP     MEAN       ENERGY        DIRECT BEAM  MEAN BUILDUP          DOSE RATE              HEATING RATES IN IRON
 NO     ENERGY   GROUP LIMITS        FLUX        FACTORS      DIRECT BEAM  WITH BUILDUP   DIRECT BEAM  WITH
BUILDUP
         MEV        MEV          MeV/cm**2-se                              R/hr                     w/g
                                  c
TOTAL   2.2033   0.0 - 3.5       2.3461E+07   1.2035E+00     1.4766E+00   1.7771E+00     2.3461E+07   2.5825E+07
W/BU    2.2820

  1     0.0100   0.000 -         1.9644E+01   1.1996E+00     9.1245E-04   1.0946E-03     1.9644E+01   2.3565E+01
  2     0.0250    0.012 -        2.4407E+02   1.2401E+00     2.6115E-04   3.2384E-04     2.4407E+02   3.0265E+02
  3     0.0375    0.030 -        5.4413E+02   4.3932E+00     5.1910E-04   2.2805E-03     5.4413E+02   2.3905E+03
  4     0.0575    0.050 -        1.3978E+04   1.0532E+01     1.3538E-03   1.4258E-02     1.3978E+04   1.4722E+05
  5     0.0850    0.070 -        6.8222E+04   4.1007E+00     1.6189E-02   6.6387E-02     6.8222E+04   2.7976E+05
  6     0.1250    0.090 -        1.4859E+05   2.1197E+00     2.6122E-03   5.5369E-03     1.4859E+05   3.1496E+05
  7     0.2250   0.200 -         3.2625E+05   1.4157E+00     8.8284E-02   1.2498E-01     3.2625E+05   4.6188E+05
  8     0.3750    0.300 -        5.7966E+05   1.2377E+00     1.7419E-01   2.1558E-01     5.7966E+05   7.1741E+05
  9     0.5750    0.450 -        9.2145E+05   1.1688E+00     5.0532E-01   5.9061E-01     9.2145E+05   1.0770E+06
 10     0.8500    0.700 -        1.4007E+06   1.1254E+00     2.4260E-01   2.7303E-01     1.4007E+06   1.5764E+06
 11     1.2500    1.000 -        2.1104E+06   1.0952E+00     2.8997E-01   3.1759E-01     2.1104E+06   2.3114E+06
 12     1.7500    1.500 -        3.0071E+06   1.0756E+00     1.0552E-01   1.1350E-01     3.0071E+06   3.2346E+06
 13     2.2500   2.000 -         3.9076E+06   1.0641E+00     4.5680E-02   4.8606E-02     3.9076E+06   4.1579E+06
 14     2.7500    2.500 -        4.8106E+06   1.0562E+00     2.6126E-03   2.7595E-03     4.8106E+06   5.0811E+06
 15     3.5000    3.000 -        6.1657E+06   1.0482E+00     5.6959E-04   5.9703E-04     6.1657E+06   6.4628E+06
```

QAD Ouput File At Time 12 Hours Post-Accident

```
 QAD with Combinatorial Geometry and option for Monte
Carlo source points: Developed at Shonka Research Associates, Inc. 1994
Version: 1.05
Serial #: 121698

This problem started at 16:01:02 on 10/12/04

          INPUT DATA LIST

   1  # Input File - RE109 Response Calculation
   2  # LSO = 1
   3  # MSO = 1
   4  # NSO = 1
   5  # MAT = 14
   6  # NCOMP = 4
   7  # NREG = 20
   8  # NRGY = 15
```

```
# NBOUND= 1
# NSOPT = 1
# NZSO = 3
# ISRC = 1
# INEUT = 0
# NGPF = 10
# NGPL = 100
# NGPI = 10
# NGINT = 0
# NVOL = 1
# 1% clad failure (instantaneous) - 12 hours
RE109 Response Analysis QAD-CG
 1 1 1 14 4 20 15 1 1 3 1 0 10 100 10 0 1
 1 0 0
   2.020+09  0  0  0  0  0  0
    2  17  20000
   1 2 3 4 5 6 7 8 9 10 11 12 13 14 15 16 17
   1 1 1 1 1 1 1 1 1 1  1  1  1  1  1  1  1
    0    0            Sample piping by RE109
  RCC 1          15.2        0.0        0.0        0.0        0.0       16.6
                0.311
  RCC 2          15.2        0.0        0.0        0.0        0.0       16.6
                0.476
  SPH 3          15.2        0.0        0.0      0.311
  SPH 4          15.2        0.0        0.0      0.476
  RCC 5          15.2        0.0        0.0        0.0       11.4        0.0
                0.311
  RCC 6          15.2        0.0        0.0        0.0       11.4        0.0
                0.476
  SPH 7          15.2       11.4        0.0      0.311
  SPH 8          15.2       11.4        0.0      0.476
  RCC 9          10.2       11.4        0.0       5.08        0.0        0.0
                0.311
  RCC 10         10.2        0.0        0.0       5.08        0.0        0.0
                0.476
  SPH 11         10.2       11.4        0.0      0.311
  SPH 12         10.2       11.4        0.0      0.476
  RCC 13         10.2        0.0        0.0        0.0       11.4        0.0
                0.311
  RCC 14         10.2        0.0        0.0        0.0       11.4        0.0
                0.476
  SPH 15         10.2        0.0        0.0      0.311
  SPH 16         10.2        0.0        0.0      0.476
  RCC 17         5.08        0.0        0.0       5.08        0.0        0.0
                0.311
  RCC 18         5.08        0.0        0.0       5.08        0.0        0.0
                0.476
  SPH 19         5.08        0.0        0.0      0.311
  SPH 20         5.08        0.0        0.0      0.476
  RCC 21         5.08        0.0        0.0        0.0       11.4        0.0
                0.311
  RCC 22         5.08        0.0        0.0        0.0       11.4        0.0
                0.476
  SPH 23         5.08       11.4        0.0      0.311
  SPH 24         5.08       11.4        0.0      0.476
  RCC 25          0.0       11.4        0.0       5.08        0.0        0.0
                0.311
  RCC 26          0.0       11.4        0.0       5.08        0.0        0.0
                0.476
  SPH 27          0.0       11.4        0.0      0.311
  SPH 28          0.0       11.4        0.0      0.476
  RCC 29          0.0        0.0        0.0        0.0       11.4        0.0
                0.311
  RCC 30          0.0        0.0        0.0        0.0       11.4        0.0
                0.476
  SPH 31          0.0        0.0        0.0      0.311
  SPH 32          0.0        0.0        0.0      0.476
  RCC 33          0.0        0.0        0.0        0.0        0.0       14.1
                0.311
  RCC 34          0.0        0.0        0.0        0.0        0.0       14.1
                0.476
  RCC 35        -50.0        0.0        0.0      100.0        0.0        0.0
                 50.0
  RCC 36      -1000.0        0.0        0.0     2000.0        0.0        0.0
                500.0
  END
  H01    5     +1
  H02    5     +3     -1
  H03    5     +5     -3     -1
```

```
 88    H04    5    +7    -5
 89    H05    5    +9    -7    -5
 90    H06    5   +11    -9
 91    H07    5   +13   -11    -9
 92    H08    5   +15   -13
 93    H09    5   +17   -15   -13
 94    H10    5   +19   -17
 95    H11    5   +21   -19   -17
 96    H12    5   +23   -21
 97    H13    5   +25   -23   -21
 98    H14    5   +27   -25
 99    H15    5   +29   -27   -25
100    H16    5   +31   -29
101    H17    5   +33   -31
102    S01    5    +2    -1    -5
103    S02    5    +4    -3    -2    -6
104    S03    5    +6    -5    -2    -9
105    S04    5    +8    -7    -6   -10
106    S05    5   +10    -9    -6   -13
107    S06    5   +12   -11   -10   -14
108    S07    5   +14   -13   -10   -17
109    S08    5   +16   -15   -14   -18
110    S09    5   +18   -17   -14   -21
111    S10    5   +20   -19   -18   -22
112    S11    5   +22   -21   -18   -25
113    S12    5   +24   -23   -22   -26
114    S13    5   +26   -25   -22   -29
115    S14    5   +28   -27   -26   -30
116    S15    5   +30   -29   -26   -33
117    S16    5   +32   -31   -30   -34
118    S17    5   +34   -33   -30
119    AIR    5   +35    -2    -4    -6    -8   -10   -12   -14   -16
120               -18   -20   -22   -24   -26   -28   -30   -32   -34
121    UNI    5   +36   -35
122    END
123      1    1    1    1    1    1    1    1    1    1    1    1    1    1
124      1    1    1    1    1    1    1    1    1    1    1    1    1    1
125      1    1    1    1    1    1    1    1
126      1    1    1    1    1    1    1    1    1    1    1    1    1    1
127      1    1    1    2    2    2    2    2    2    2    2    2    2    2
128      2    2    2    2    2    2    4    0
129     11 1 6 7 8 12 13 14 16 19 20 24 25 26 28
130  WATE EXP
131     1.110E-01 0.0       0.0       8.890E-01 0.0       0.0       0.0
132     0.0       0.0       0.0       0.0       0.0       0.0       0.0
133     0.0       6.000E-03 0.0       0.0       0.0       0.0       8.000E-02
134     0.0       0.0       0.0       1.524E+00 1.600E-01 5.447E+00 8.020E-01
135     2.0003-02 1.180E-01 0.0       1.160E+00 5.700E-02 8.500E-02 3.420E-01
136     7.000E-03 4.000E-03 5.820E-01 0.0       0.0       2.600E-02 0.0
137     0.0       0.0       1.000E-03 2.710E-04 0.0       0.0       0.0
138     0.0       0.0       0.0       0.0       0.0       0.0       0.0
139  1.00E-02 2.50E-02 3.75E-02 5.75E-02 8.50E-02 1.25E-01 2.25E-01 3.75E-01
140  5.75E-01 8.50E-01 1.25E+00 1.75E+00 2.25E+00 2.75E+00 3.50E+00
141  1.00E-02 2.50E-02 3.75E-02 5.75E-02 8.50E-02 1.25E-01 2.25E-01 3.75E-01
142  5.75E-01 8.50E-01 1.25E+00 1.75E+00 2.25E+00 2.75E+00 3.50E+00
143  4.353E-05 1.043E-06 1.064E-06 8.886e-08 2.650E-07 1.494E-08 2.808E-07
144  3.345E-07 5.503E-07 1.649E-07 1.136E-07 2.468E-08 6.018E-09 2.050E-10
145  3.932E-11
146  1.0 1.0 1.0 1.0 1.0 1.0 1.0 1.0 1.0 1.0 1.0 1.0 1.0 1.0 1.0
147  0.0 - 3.5
148  0.000 -      0.012 -      0.030 -      0.050 -      0.070 -      0.090 -
149  0.200 -      0.300 -      0.450 -      0.700 -      1.000 -      1.500 -
150  2.000 -      2.500 -      3.000 -
151  MeV/cm**2-sec                R/hr                 w/g
152  1.0
153    7.62  5.72  -6.22    1  0  0  0
154    0     0      0      -1  0  0  0
155
```

```
                    RE109 Response Analysis QAD-CG

    RECEIVER NUMBER  1    COORDINATES -
                                          X    7.6200E+00     Y    5.7200E+00     Z   -6.2200E+00
                    RE109 Response Analysis QAD-CG

    RECEIVER NUMBER  1    COORDINATES -
                                          X    7.6200E+00     Y    5.7200E+00     Z   -6.2200E+00
 GRP     MEAN       ENERGY        DIRECT BEAM  MEAN BUILDUP          DOSE RATE              HEATING RATES IN IRON
 NO     ENERGY   GROUP LIMITS        FLUX        FACTORS      DIRECT BEAM  WITH BUILDUP   DIRECT BEAM  WITH
BUILDUP
         MEV         MEV          MeV/cm**2-se                                R/hr                    w/g
                                  c
 TOTAL  2.2033   0.0 - 3.5        2.0167E+07   1.2175E+00     1.1909E+00   1.4499E+00     2.0167E+07   2.2199E+07
 W/BU   2.2820


  1     0.0100   0.000 -          1.6885E+01   1.1996E+00     7.3502E-04   8.8173E-04     1.6885E+01   2.0256E+01
  2     0.0250    0.012 -         2.0979E+02   1.2401E+00     2.1881E-04   2.7134E-04     2.0979E+02   2.6015E+02
  3     0.0375    0.030 -         4.6772E+02   4.3932E+00     4.9766E-04   2.1863E-03     4.6772E+02   2.0548E+03
  4     0.0575    0.050 -         1.2015E+04   1.0532E+01     1.0677E-03   1.1245E-02     1.2015E+04   1.2654E+05
  5     0.0850    0.070 -         5.8642E+04   4.1007E+00     1.5540E-02   6.3725E-02     5.8642E+04   2.4047E+05
  6     0.1250    0.090 -         1.2772E+05   2.1197E+00     1.9082E-03   4.0447E-03     1.2772E+05   2.7073E+05
  7     0.2250   0.200 -          2.8044E+05   1.4157E+00     7.8748E-02   1.1148E-01     2.8044E+05   3.9702E+05
  8     0.3750    0.300 -         4.9826E+05   1.2377E+00     1.6667E-01   2.0628E-01     4.9826E+05   6.1667E+05
  9     0.5750    0.450 -         7.9205E+05   1.1688E+00     4.3587E-01   5.0943E-01     7.9205E+05   9.2574E+05
 10     0.8500    0.700 -         1.2040E+06   1.1254E+00     1.9854E-01   2.2344E-01     1.2040E+06   1.3550E+06
 11     1.2500    1.000 -         1.8141E+06   1.0952E+00     2.0608E-01   2.2570E-01     1.8141E+06   1.9868E+06
 12     1.7500    1.500 -         2.5849E+06   1.0756E+00     6.3795E-02   6.8619E-02     2.5849E+06   2.7804E+06
 13     2.2500   2.000 -          3.3589E+06   1.0641E+00     2.0214E-02   2.1509E-02     3.3589E+06   3.5741E+06
 14     2.7500    2.500 -         4.1350E+06   1.0562E+00     8.4768E-04   8.9535E-04     4.1350E+06   4.3676E+06
 15     3.5000    3.000 -         5.2999E+06   1.0482E+00     2.0839E-04   2.1843E-04     5.2999E+06   5.5552E+06
```

QAD Ouput File At Time 24 Hours Post-Accident

```
 AD with Combinatorial Geometry and option for Monte
 rlo source points: Developed at Shonka Research Associates, Inc. 1994
 ersion: 1.05
Serial #: 121698

This problem started at 16:13:41 on 10/12/04

          INPUT DATA LIST

  1  # Input File - RE109 Response Calculation
  2  # LSO = 1
  3  # MSO = 1
  4  # NSO = 1
  5  # MAT = 14
  6  # NCOMP = 4
  7  # NREG = 20
  8  # NRGY = 15
  9  # NBOUND= 1
 10  # NSOPT = 1
 11  # NZSO = 3
 12  # ISRC = 1
 13  # INEUT = 0
 14  # NGPF = 10
 15  # NGPL = 100
 16  # NGPI = 10
 17  # NGINT = 0
 18  # NVOL = 1
 19  # 1% clad failure (instantaneous) - 24 hours
 20  RE109 Response Analysis QAD-CG
 21   1 1 1 14 4 20 15 1 1 3 1 0 10 100 10 0 1
 22   1 0 0
 23     1.560+09  0  0  0  0  0  0
 24      2  17  20000
 25     1 2 3 4 5 6 7 8 9 10 11 12 13 14 15 16 17
 26     1 1 1 1 1 1 1 1 1 1  1  1  1  1  1  1  1
 27      0    0            Sample piping by RE109
 28    RCC 1          15.2        0.0        0.0        0.0        0.0       16.6
 29                  0.311
 30    RCC 2          15.2        0.0        0.0        0.0        0.0       16.6
 31                  0.476
 32    SPH 3          15.2        0.0        0.0      0.311
 33    SPH 4          15.2        0.0        0.0      0.476
```

34	RCC 5		15.2	0.0	0.0	0.0	11.4	0.0
35			0.311					
36	RCC 6		15.2	0.0	0.0	0.0	11.4	0.0
37			0.476					
38	SPH 7		15.2	11.4	0.0	0.311		
39	SPH 8		15.2	11.4	0.0	0.476		
40	RCC 9		10.2	11.4	0.0	5.08	0.0	0.0
41			0.311					
42	RCC 10		10.2	0.0	0.0	5.08	0.0	0.0
43			0.476					
44	SPH 11		10.2	11.4	0.0	0.311		
45	SPH 12		10.2	11.4	0.0	0.476		
46	RCC 13		10.2	0.0	0.0	0.0	11.4	0.0
47			0.311					
48	RCC 14		10.2	0.0	0.0	0.0	11.4	0.0
49			0.476					
50	SPH 15		10.2	0.0	0.0	0.311		
51	SPH 16		10.2	0.0	0.0	0.476		
52	RCC 17		5.08	0.0	0.0	5.08	0.0	0.0
53			0.311					
54	RCC 18		5.08	0.0	0.0	5.08	0.0	0.0
55			0.476					
56	SPH 19		5.08	0.0	0.0	0.311		
57	SPH 20		5.08	0.0	0.0	0.476		
58	RCC 21		5.08	0.0	0.0	0.0	11.4	0.0
59			0.311					
60	RCC 22		5.08	0.0	0.0	0.0	11.4	0.0
61			0.476					
62	SPH 23		5.08	11.4	0.0	0.311		
63	SPH 24		5.08	11.4	0.0	0.476		
64	RCC 25		0.0	11.4	0.0	5.08	0.0	0.0
65			0.311					
66	RCC 26		0.0	11.4	0.0	5.08	0.0	0.0
67			0.476					
68	SPH 27		0.0	11.4	0.0	0.311		
69	SPH 28		0.0	11.4	0.0	0.476		
70	RCC 29		0.0	0.0	0.0	0.0	11.4	0.0
71			0.311					
72	RCC 30		0.0	0.0	0.0	0.0	11.4	0.0
73			0.476					
74	SPH 31		0.0	0.0	0.0	0.311		
75	SPH 32		0.0	0.0	0.0	0.476		
76	RCC 33		0.0	0.0	0.0	0.0	0.0	14.1
77			0.311					
78	RCC 34		0.0	0.0	0.0	0.0	0.0	14.1
79			0.476					
80	RCC 35		-50.0	0.0	0.0	100.0	0.0	0.0
81			50.0					
82	RCC 36		-1000.0	0.0	0.0	2000.0	0.0	0.0
83			500.0					
84	END							
85	H01	5	+1					
86	H02	5	+3	-1				
87	H03	5	+5	-3	-1			
88	H04	5	+7	-5				
89	H05	5	+9	-7	-5			
90	H06	5	+11	-9				
91	H07	5	+13	-11	-9			
92	H08	5	+15	-13				
93	H09	5	+17	-15	-13			
94	H10	5	+19	-17				
95	H11	5	+21	-19	-17			
96	H12	5	+23	-21				
97	H13	5	+25	-23	-21			
98	H14	5	+27	-25				
99	H15	5	+29	-27	-25			
100	H16	5	+31	-29				
101	H17	5	+33	-31				
102	S01	5	+2	-1	-5			
103	S02	5	+4	-3	-2	-6		
104	S03	5	+6	-5	-2	-9		
105	S04	5	+8	-7	-6	-10		
106	S05	5	+10	-9	-6	-13		
107	S06	5	+12	-11	-10	-14		
108	S07	5	+14	-13	-10	-17		
109	S08	5	+16	-15	-14	-18		
110	S09	5	+18	-17	-14	-21		
111	S10	5	+20	-19	-18	-22		
112	S11	5	+22	-21	-18	-25		

```
113    S12    5    +24    -23    -22    -26
114    S13    5    +26    -25    -22    -29
115    S14    5    +28    -27    -26    -30
116    S15    5    +30    -29    -26    -33
117    S16    5    +32    -31    -30    -34
118    S17    5    +34    -33    -30
119    AIR    5    +35     -2     -4     -6     -8    -10    -12    -14    -16
120                -18    -20    -22    -24    -26    -28    -30    -32    -34
121    UNI    5    +36    -35
122    END
123      1    1    1    1    1    1    1    1    1    1    1    1    1    1
124      1    1    1    1    1    1    1    1    1    1    1    1    1    1
125      1    1    1    1    1    1    1    1
126      1    1    1    1    1    1    1    1    1    1    1    1    1    1
127      1    1    1    2    2    2    2    2    2    2    2    2    2    2
128      2    2    2    2    2    2    4    0
129     11 1 6 7 8 12 13 14 16 19 20 24 25 26 28
130  WATE EXP
131     1.110E-01 0.0       0.0       8.890E-01 0.0       0.0       0.0
132     0.0       0.0       0.0       0.0       0.0       0.0       0.0
133     0.0       6.000E-03 0.0       0.0       0.0       0.0       8.000E-02
134     0.0       0.0       0.0       1.524E+00 1.600E-01 5.447E+00 8.020E-01
135     2.0003-02 1.180E-01 0.0       1.160E+00 5.700E-02 8.500E-02 3.420E-01
136     7.000E-03 4.000E-03 5.820E-01 0.0       0.0       2.600E-02 0.0
137     0.0       0.0       1.000E-03 2.710E-04 0.0       0.0       0.0
138     0.0       0.0       0.0       0.0       0.0       0.0       0.0
139  1.00E-02 2.50E-02 3.75E-02 5.75E-02 8.50E-02 1.25E-01 2.25E-01 3.75E-01
140  5.75E-01 8.50E-01 1.25E+00 1.75E+00 2.25E+00 2.75E+00 3.50E+00
141  1.00E-02 2.50E-02 3.75E-02 5.75E-02 8.50E-02 1.25E-01 2.25E-01 3.75E-01
142  5.75E-01 8.50E-01 1.25E+00 1.75E+00 2.25E+00 2.75E+00 3.50E+00
143  3.902E-05 1.012E-06 1.270E-06 7.769e-08 3.207E-07 1.155E-08 2.318E-07
144  4.018E-07 5.550E-07 1.774E-07 6.922E-08 8.296E-09 1.068E-10 1.320E-11
145  2.690E-12
146  1.0 1.0 1.0 1.0 1.0 1.0 1.0 1.0 1.0 1.0 1.0 1.0 1.0 1.0 1.0
147  0.0 - 3.5
148  0.000 -     0.012 -     0.030 -     0.050 -     0.070 -     0.090 -
149  0.200 -     0.300 -     0.450 -     0.700 -     1.000 -     1.500 -
150  2.000 -     2.500 -     3.000 -
151  MeV/cm**2-sec              R/hr                w/g
152  1.0
153    7.62  5.72  -6.22    1  0  0  0
154    0     0      0      -1  0  0  0
155
```

```
1                    RE109 Response Analysis QAD-CG

     RECEIVER NUMBER  1    COORDINATES -
+                                        X    7.6200E+00     Y    5.7200E+00     Z   -6.2200E+00
1                    RE109 Response Analysis QAD-CG

     RECEIVER NUMBER  1    COORDINATES -
+                                        X    7.6200E+00     Y    5.7200E+00     Z   -6.2200E+00
 GRP     MEAN       ENERGY        DIRECT BEAM  MEAN BUILDUP          DOSE RATE              HEATING RATES IN IRON
 NO     ENERGY   GROUP LIMITS       FLUX        FACTORS      DIRECT BEAM  WITH BUILDUP   DIRECT BEAM  WITH
BUILDUP
         MEV         MEV          MeV/cm**2-se                              R/hr                     w/g
                                  c
 TOTAL  2.2033   0.0 - 3.5        1.5574E+07   1.2391E+00     8.4063E-01   1.0416E+00     1.5574E+07   1.7143E+07
 W/BU   2.2820


  1     0.0100   0.000 -          1.3040E+01   1.1996E+00     5.0882E-04   6.1039E-04     1.3040E+01   1.5643E+01
  2     0.0250    0.012 -         1.6202E+02   1.2401E+00     1.6396E-04   2.0332E-04     1.6202E+02   2.0091E+02
  3     0.0375    0.030 -         3.6121E+02   4.3932E+00     4.5874E-04   2.0153E-03     3.6121E+02   1.5869E+03
  4     0.0575    0.050 -         9.2790E+03   1.0532E+01     7.2089E-04   7.5924E-03     9.2790E+03   9.7726E+04
  5     0.0850    0.070 -         4.5288E+04   4.1007E+00     1.4524E-02   5.9558E-02     4.5288E+04   1.8571E+05
  6     0.1250    0.090 -         9.8637E+04   2.1197E+00     1.1393E-03   2.4148E-03     9.8637E+04   2.0908E+05
  7     0.2250   0.200 -          2.1658E+05   1.4157E+00     5.0203E-02   7.1072E-02     2.1658E+05   3.0661E+05
  8     0.3750    0.300 -         3.8479E+05   1.2377E+00     1.5461E-01   1.9135E-01     3.8479E+05   4.7624E+05
  9     0.5750    0.450 -         6.1168E+05   1.1688E+00     3.3949E-01   3.9678E-01     6.1168E+05   7.1493E+05
 10     0.8500    0.700 -         9.2983E+05   1.1254E+00     1.6495E-01   1.8564E-01     9.2983E+05   1.0464E+06
 11     1.2500    1.000 -         1.4010E+06   1.0952E+00     9.6974E-02   1.0621E-01     1.4010E+06   1.5344E+06
 12     1.7500    1.500 -         1.9962E+06   1.0756E+00     1.6561E-02   1.7813E-02     1.9962E+06   2.1472E+06
        2.2500   2.000 -          2.5940E+06   1.0641E+00     2.7704E-04   2.9479E-04     2.5940E+06   2.7602E+06
        2.7500    2.500 -         3.1934E+06   1.0562E+00     4.2153E-05   4.4523E-05     3.1934E+06   3.3730E+06
        3.5000    3.000 -         4.0930E+06   1.0482E+00     1.1010E-05   1.1541E-05     4.0930E+06   4.2902E+06
```

Attachment E - RE109 Failed Fuel Monitor/Sample Tubing Equipment Arrangement Model

RE-109 MONITOR / SAMPLE TUBING EQ. ARRANGEMENT

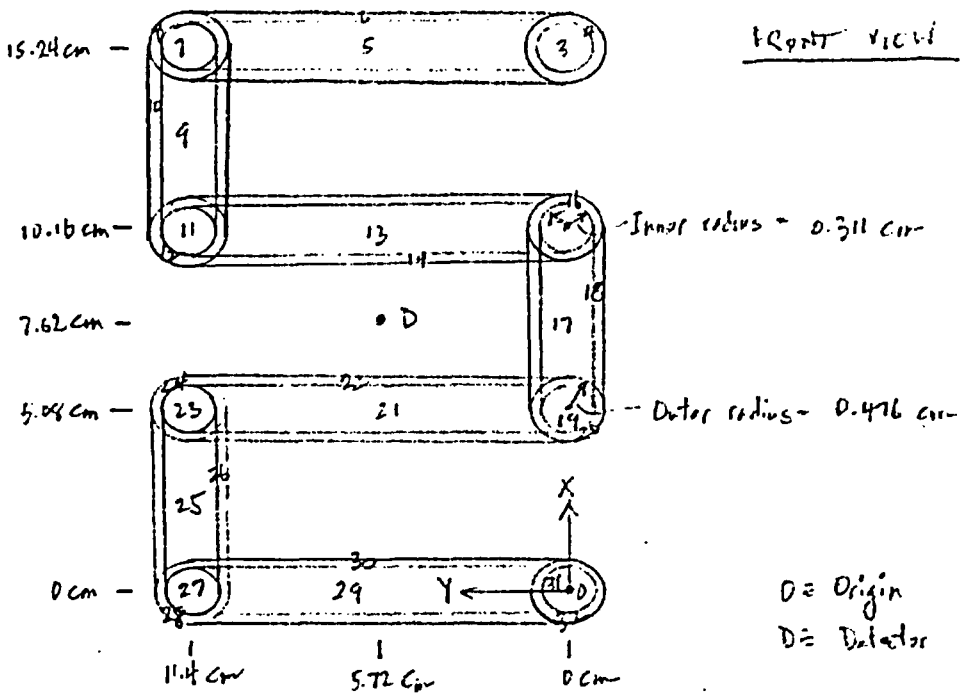

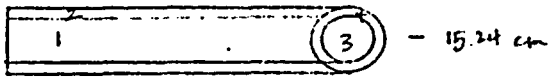

SIDE VIEW
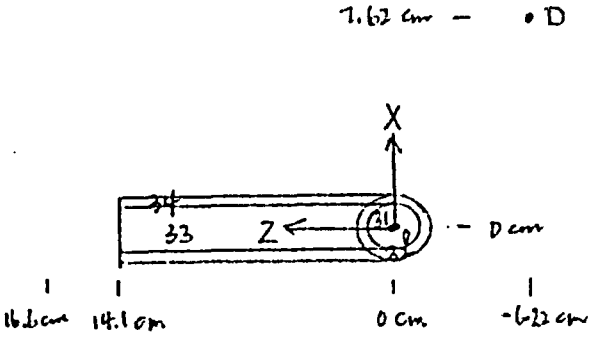
NOTE: These sampler tubing sections lie in the y = 0 plane.