Gas Intrusion in Emergency Core Cooling Systems (ECCS)

Mike Franovich
Senior Reliability & Risk Analyst

May 16-17, 2005

Tokyo, Japan

Why Discuss ECCS Gas?

- Efforts to date have not resulted in effective ECCS gas management
- Risk significant ECCS gas incidents continue to occur
- Further review of industry ECCS gas management practices may be warranted

Preview

- ECCS Gas Sources & Traps
- ECCS Gas Management
- ECCS Gas Intrusion Brief History
- Palo Verde Pipe Void Condition
- Actions Under Consideration

ECCS Gas Sources & Traps

- **Deficient Fill / Vent**
  - Issues following outages and maintenance
- **Liberation from gas-saturated water**
  - RHR shutdown
  - Cold leg accumulator check-valve back-leakage
- **Design Deficiencies**
  - Gas traps
  - Non-venting local high points
- **Plant Configuration Control**
  - Palo Verde sump

Cold Leg Accumulator Check Valve Back-leakage

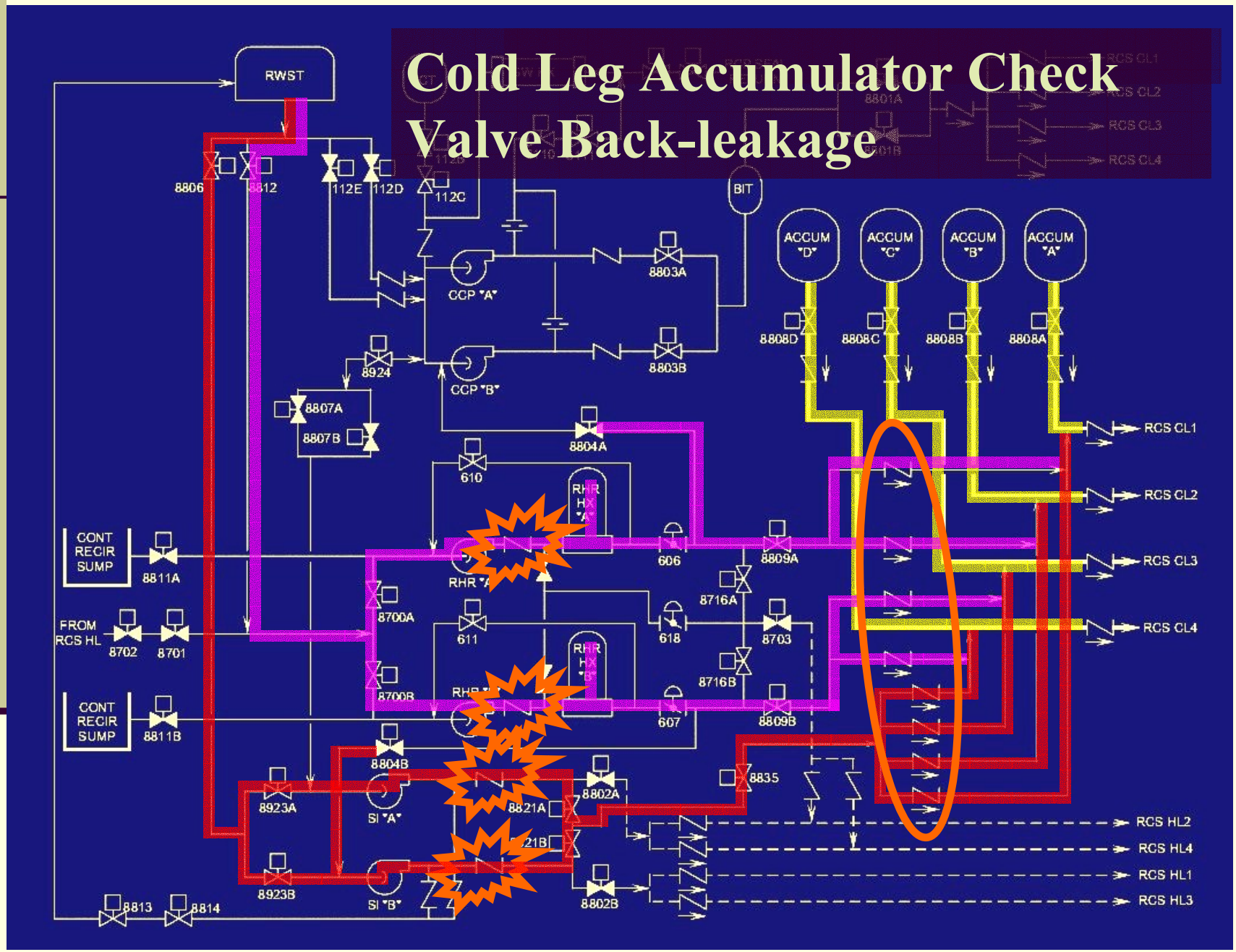

ECCS Sump, RHR Heat Exchanger, or Cross-Over Piping

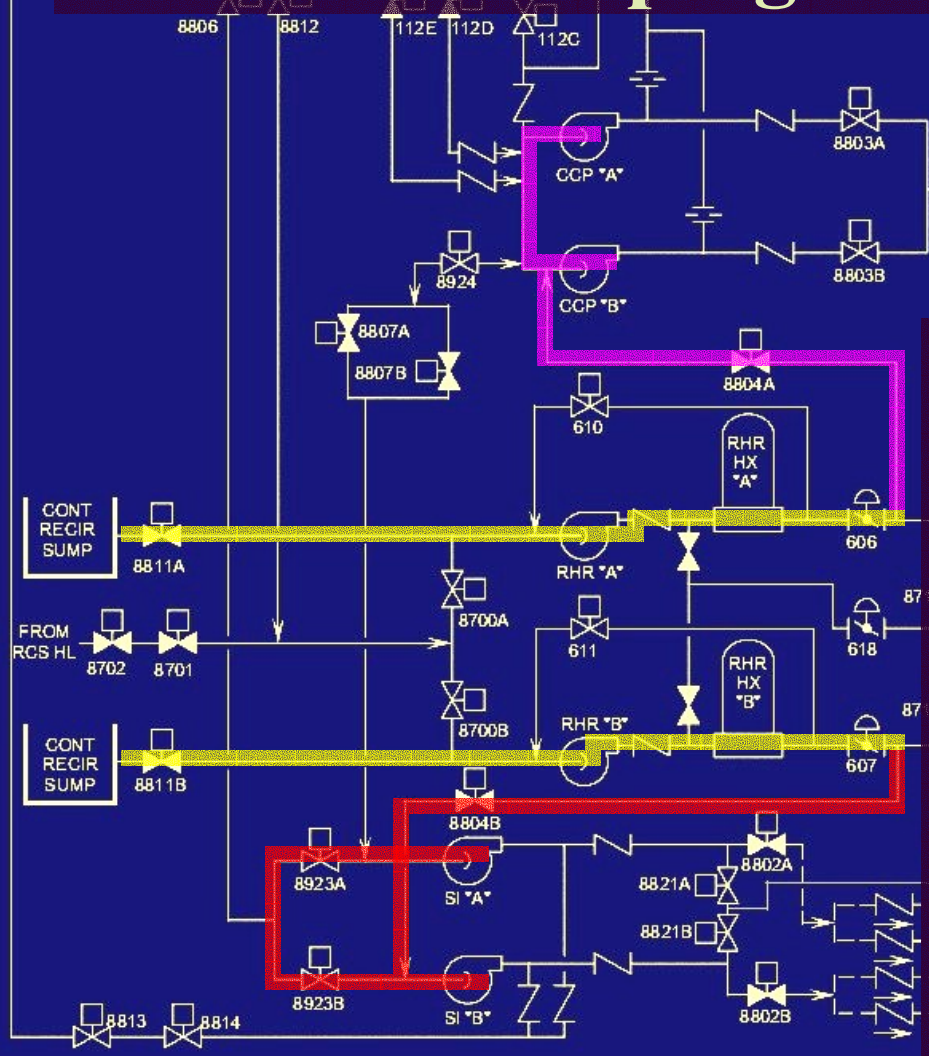

Sample Non-standard Technical Specification Surveillance Requirement:

SR 4.5.2.b.1. "Each ECCS subsystem shall be demonstrated OPERABLE at least once per 31 days by verifying that the piping is full of water by venting ECCS pump casings and accessible discharge piping high points."

ECCS Gas & Check Valve Leakage

- ***6 cubic feet***
  - Sufficient gas volume to bind an ECCS pump (some estimates place this at 3 cubic feet or less)
- ***0.68 cubic foot / gallon***
  - Approximate volume of nitrogen liberated per gallon of water as it depressurizes from 640 to 15 psig. Converting to common units:
    Each gallon of water liberates ~ 5 gallons of nitrogen
- ***0.5 gallon/day*** (10 cubic feet of nitrogen per month)
  - Approximate detection threshold for "bucket test" used to estimate check valve leakage
- ***5.3 gallons/day*** (110 cubic feet of nitrogen per month)
  - Observed daily leak rate from one cold-leg accumulator during a seven-month period at one Westinghouse 4-Loop PWR

Ineffective Gas Management

- **Typical Consequences**
  - Inadvertent actuation of relief valves
  - Damage to valves, pipe supports
  - Pump cavitation, reduced reliability
- **Possible Outcomes**
  - ECCS pump failure
  - ECCS reduced performance
- **Ultimate Concern**
  - Loss of ECCS
  - Increased CDF

Effective Gas Management

- **Periodic surveillance should's and should not's…**
  - Should assess as-found condition against meaningful acceptance criteria to verify ECCS has remained OPERABLE
  - Should not unacceptably precondition ECCS (e.g. not vent gas without assessing it's impact on as-found OPERABILITY)
  - Should be prescribed and performed in accordance with appropriate written procedures, drawings, etc. (App B, Crit. V)
  - Should include all testing required to demonstrate that ECCS will perform satisfactorily (e.g. include ECCS suction and cross-over (Crit. XI)
  - Should identify & correct conditions adverse to quality (Crit. XVI)

ECCS GAS Intrusion History

- 1997
  - Oconee 3 Loss of HPSI
- 1999 McGuire ECCS Piggy Back Line
- 2002 Point Beach SI Pump Failure
- 2004
  - Palo Verde Voided ECCS Sump Suction Piping
  - Indian Point 2 ECCS Safety Injection Line

Palo Verde ECCS Pipe Void Issue

- Resident Inspector questions Waterford on ECCS void
- Waterford contacts Palo Verde (PV)
- PV 1/3 voided ECCS suction from sump
- Comp measure followed by filling the containment sump

Palo Verde Configuration

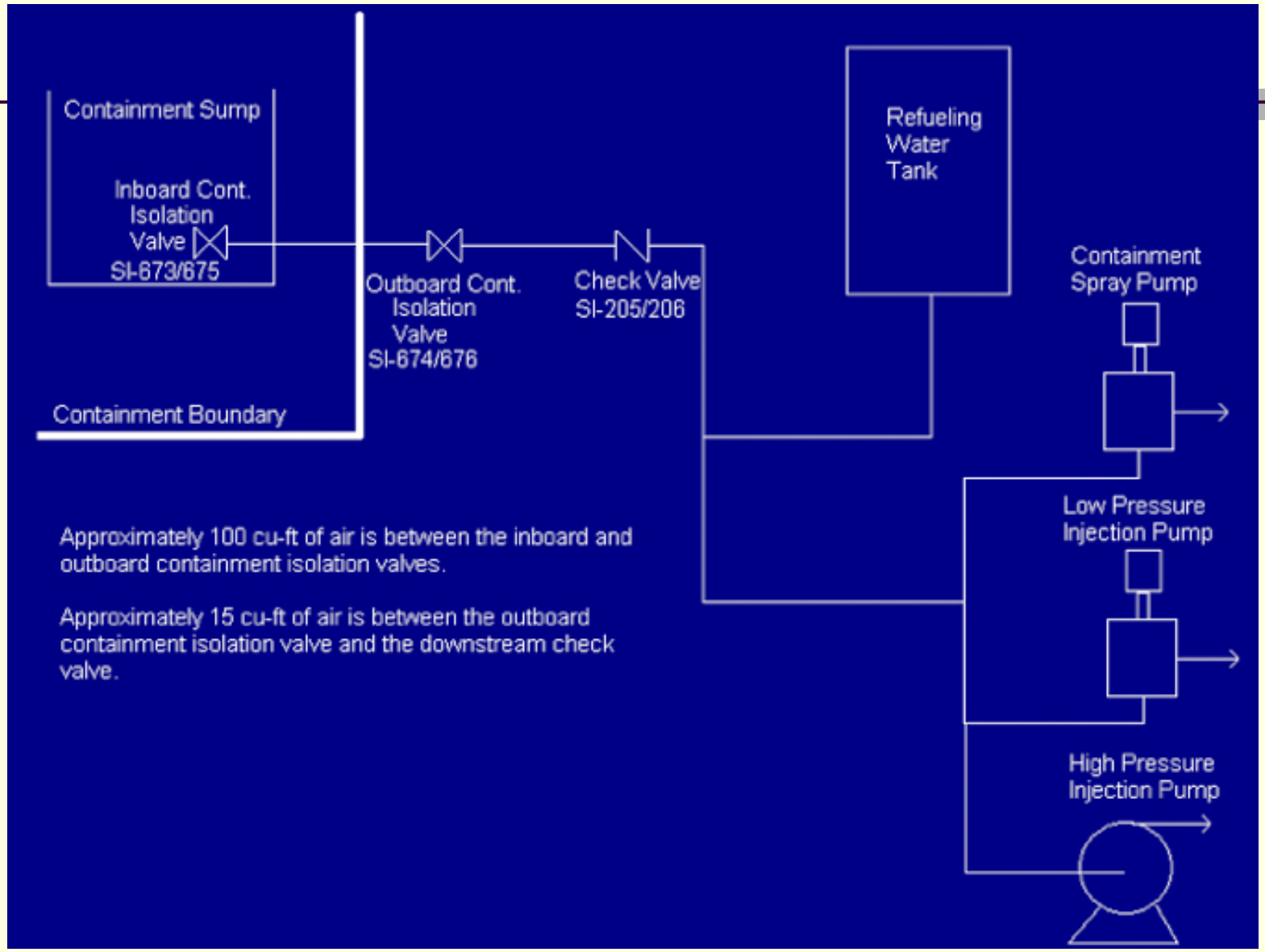

Palo Verde Extent of Condition

- Air traveled to pumps in mockup
- Full scale test on ECCS pumps conduct under simulated conditions
- Risk significant during medium LOCAs
- Delta CDF estimated between 1E-5/yr and 1E-4/yr (a YELLOW finding)

Conclusions

- Efforts to date have not resulted in effective ECCS gas management at all licensees, sometimes resulting in risk significant incidents.
- Further review of industry gas management effectiveness may be warranted with regard to maintaining reasonable assurance of ECCS system operability.

Actions Under Consideration

- Collect additional industry data on current ECCS gas management practices to better understand why the issue persists **(Generic Letter)**

- Conduct focused inspection to validate industry-provided data **(Temporary Instruction)**

- Review, clarify, strengthen, and/or add to existing regulatory requirements
  (Technical guidance, tech spec revision, rulemaking, etc.)

ECCS GAS INTRUSION FLOW CHART

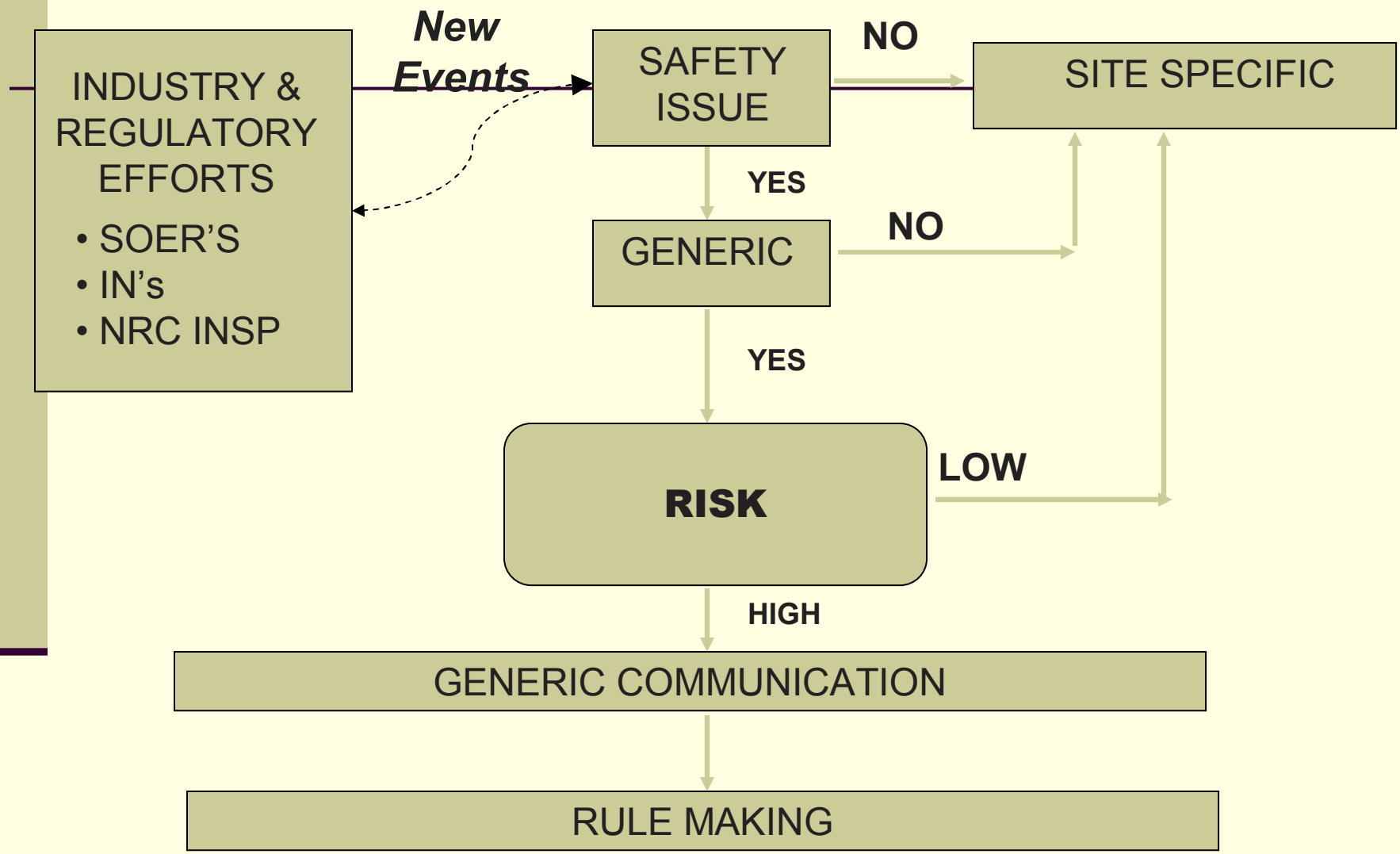

The End

Questions & Answers…..