FENOC

FirstEnergy Nuclear Operating Company

Perry Nuclear Power Plant
10 Center Road
Perry, Ohio 44081

Richard Anderson
Vice President-Nuclear

440-280-5579
Fax: 440-280-8029

April 26, 2005
PY-CEI/NRR-2873L

United States Nuclear Regulatory Commission
Document Control Desk
Washington, D.C. 20555

Perry Nuclear Power Plant
Docket No. 50-440
Annual Environmental and Effluent Release Report

Ladies and Gentlemen:

Enclosed is the Annual Environmental and Effluent Release Report for the Perry Nuclear Power Plant (PNPP), Unit 1, for the period of January 1, 2004 through December 31, 2004. This document includes the radiological environmental operating report, radioactive effluent release report, and the non-radiological environmental operating report which satisfies the requirements of the PNPP Technical Specifications, the PNPP Offsite Dose Calculation Manual, and the Environmental Protection Plan, Appendix B of the PNPP Operating License.

If you have any questions or require additional information, please contact Michael J. Alfonso at (440) 280-7204.

Very truly yours,

Enclosures

cc: NRC Project Manager
NRC Region III
NRC Resident Inspectors Office

IE48
IE25

Annual Environmental and Effluent Release Report

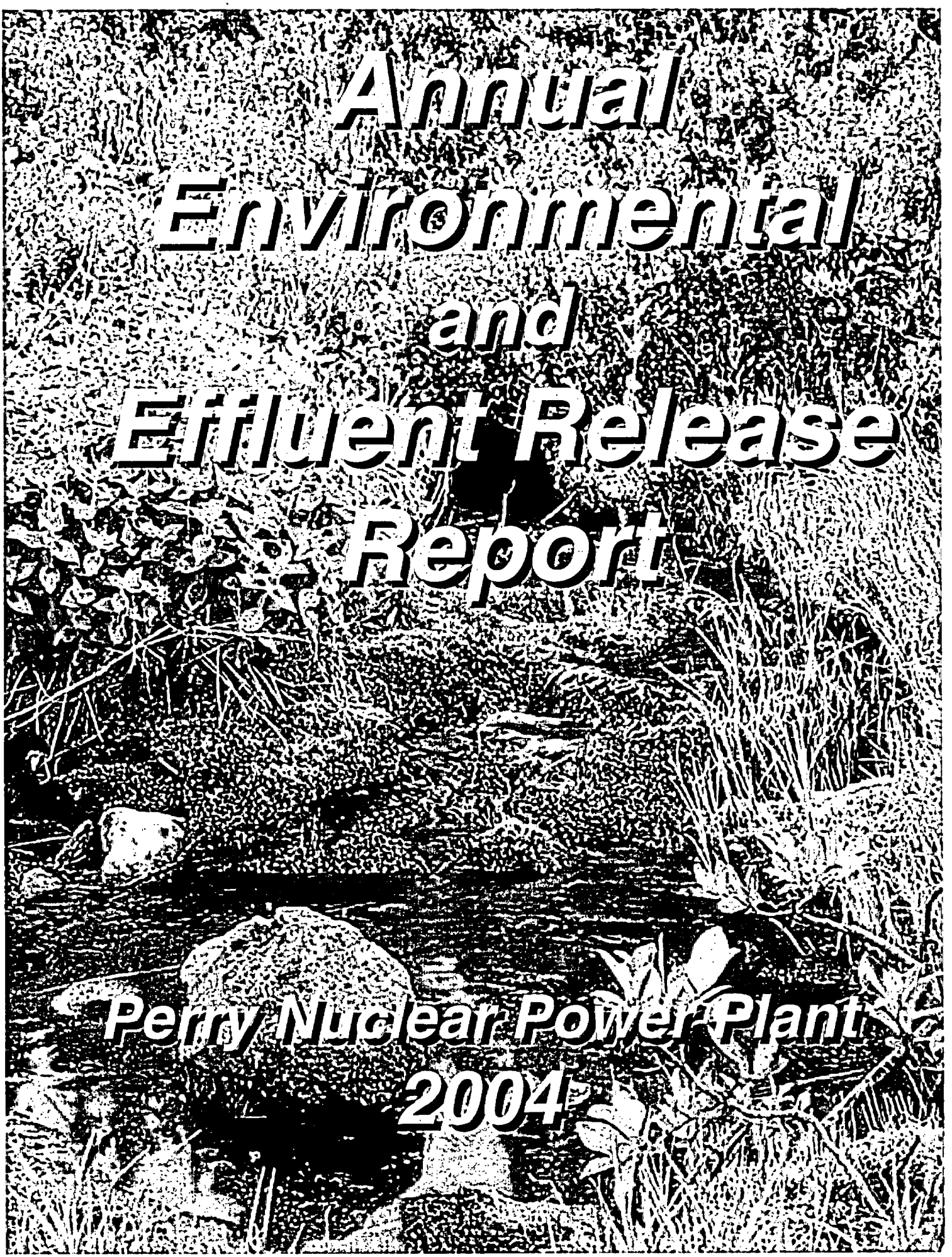

Perry Nuclear Power Plant

2004

2004

ANNUAL ENVIRONMENTAL AND EFFLUENT RELEASE REPORT

for the Perry Nuclear Power Plant

PREPARED BY:
CHEMISTRY SECTION
PERRY NUCLEAR POWER PLANT
FIRSTENERGY NUCLEAR OPERATING COMPANY
PERRY, OHIO
MARCH, 2005

TABLE OF CONTENTS

EXECUTIVE SUMMARY 1
Radioactive Effluent Releases 1
Radiological Environmental Monitoring 1
Land Use Census 2
Clam/Mussel Monitoring 3
Herbicide Use 3
Special Reports 3
Ohio Department of Natural Resources Survey 3
INTRODUCTION 4
Radiation Fundamentals 4
Radiation and Radioactivity 4
Units of Measure 5
Lower Limit of Detection 5
Background Radiation 6
RADIOACTIVE EFFLUENT RELEASES 7
Introduction 7
Regulatory Limits 7
Release Summary 9
Meteorological Data 16
Dose Assessment 16
Abnormal Releases 18
Non-Compliances 18
Offsite Dose Calculation Manual Changes 19
Process Control Program Changes 19
RADIOLOGICAL ENVIRONMENTAL MONITORING 20
Introduction 20
Sampling Locations 20
Sample Analysis 25
2004 Sampling Program 26
Inter-Laboratory Cross-Check Comparison Program 34
Land Use Census 35
CLAM/MUSSEL MONITORING 38
Introduction 38
Corbicula Program 38
Dreissena Program 39
HERBICIDE APPLICATIONS 40
SPECIAL REPORTS 42
Non-Compliances 42
Unreviewed Environmental Questions 42
Ohio Department of Natural Resources Survey 42
Appendix A, 2004 Inter-Laboratory Cross Check Comparison Program Results 43
Appendix B, 2004 REMP Data Summary Reports 44
Appendix C, 2004 REMP Detailed Data Reports 45
Appendix D, 2003 Corrections to AEERR 46

EXECUTIVE SUMMARY

The Annual Environmental and Effluent Release Report (AEERR) details the results of environmental and effluent monitoring programs conducted at the Perry Nuclear Power Plant (PNPP) from January 01 through December 31, 2004. This report meets all of the requirements in PNPP Technical Specifications, the Environmental Protection Plan (EPP), and Regulatory Guide 1.21. It incorporates the requirements of the Annual Radioactive Effluent Release Report (ARERR), the Annual Radiological Environmental Operating Report (AREOR) and the Annual Environmental Operating Report (AEOR). Report topics include radioactive effluent releases, radiological environmental monitoring, land use census, clam/mussel monitoring, herbicide use, and special reports. The results of the environmental and effluent programs, for 2004, indicate that the operations of the Perry Nuclear Power Plant did not result in any significant environmental impact.

RADIOACTIVE EFFLUENT RELEASES

During the normal operation of a nuclear power plant, small quantities of radioactivity may be released to the environment in liquid and gaseous effluents. Radioactive material may also be released as solid waste. PNPP maintains a comprehensive program to control and monitor the release of radioactive materials from the site in accordance with Nuclear Regulatory Commission (NRC) release regulations.

The dose to the general public from the plant's liquid and gaseous effluents was below the applicable regulatory limits. The calculated hypothetical maximum individual whole body dose potentially received by an individual resulting from PNPP liquid effluents was 7.38E-03 mrem (0.25 % of the applicable limit). The calculated hypothetical maximum individual whole body dose potentially received by an individual resulting from PNPP gaseous effluents was 2.55E-02 mrem (0.51% of the applicable limit). The summation of the hypothetical maximum individual dose from effluents in 2004 is equivalent to < 0.1 % of the total dose an individual living in the PNPP area receives from all sources of radiation.

Shipments of solid waste consisted of waste generated during water treatment, radioactive material generated during normal daily operations and maintenance, and irradiated components. PNPP complied with applicable regulations governing radioactive shipments in 2004, making shipments of solid radioactive waste to a licensed burial site.

During 2004, there was (1) Offsite Dose Calculation Manual (ODCM) non-compliance condition:

- The Radwaste High-Flow Discharge Header Flow Monitor, 0G50-N445, was declared inoperable on 10/2/04 due to a malfunctioning turbine flow meter. The repair was delayed until troubleshooting could be performed. Troubleshooting determined the turbine flowmeter was the problem and a replacement meter had to be obtained. Shipping the replacement meter was delayed while the vendor performed modifications to adapt the meter to PNPP's system. The flowmeter was installed, tested, and returned to service on 11/11/04. There were no liquid batch releases during the period when the monitor was not operable.

RADIOLOGICAL ENVIRONMENTAL MONITORING

The Radiological Environmental Monitoring Program (REMP) was established in 1981 to monitor the radiological conditions in the environment around PNPP. The REMP is conducted in accordance with PNPP Technical Specifications and the Offsite Dose Calculation Manual (ODCM). This program includes the collection and analysis of environmental samples and evaluation of results.

The REMP was established at PNPP six (6) years before the plant became operational. This pre-operational program was designed to provide data on background radiation and radioactivity normally present in the area. PNPP has continued to monitor the environment during plant operation

by collecting and analyzing samples of air, precipitation, milk, fish, produce, water and sediment, as well as by measuring radiation directly.

There were over 3000 radioactivity analyses performed on the 1237 radiological environmental samples collected in 2004. The results of the REMP indicate the adequacy of the control of the release of radioactivity in the effluents from PNPP. These results also demonstrate that PNPP complies with applicable federal regulations. The REMP results are divided into four sections: atmospheric monitoring, terrestrial monitoring, aquatic monitoring, and direct radiation monitoring.

Samples of air were collected to monitor the radioactivity in the atmosphere. The 2004 results were similar to those observed for the pre-operational and operational programs from prior years. Only natural background environmental radioactivity was detected.

Terrestrial monitoring included the analysis of milk, produce, and vegetation. The PNPP ODCM does not require vegetation or soil samples to be included in the monitoring program. The results of the sample analyses in 2004 indicated concentrations of radioactivity similar to that found in previous years. Analyses of other terrestrial samples also detected concentrations of natural radioactivity similar to those observed in previous years, and indicated no build-up of radioactivity attributable to the operation of PNPP.

Aquatic monitoring included the collection and analyses of water, fish, and shoreline sediments. The 2004 analytical results for water and fish samples showed normal background radionuclide concentrations. The results of sediment sample analyses indicated that the annual average cesium radioactivity was similar to previous years for the control location. Cesium-137 activity was detected in six (6) of the thirteen (13) samples collected. The average cesium-137 radioactivity for all locations was 485.41 pCi/kg and was within the maximum value of 864 pCi/kg established in 1981.

In 1999, a sediment sample of the northwest drain impoundment (sampling location #64) was analyzed to contain 62 pCi/kg of cobalt-60. During 2004, enhanced monitoring activities continued within the boundaries of the impoundment. The cobalt-60 remained centered within the organic material located at the top of the spillway, with little or no activity found farther upstream. Sample analyses continue to identify cobalt-60 levels similar to those found in previous years. Refer to Table 16 for detailed sample results.

Direct radiation measurements showed no change from previous years. The indicator locations averaged 63.89 mrem/year and control locations averaged 61.18 mrem/year. In 2004, radiation dose in the area of PNPP was similar to the radiation dose measured at locations greater than ten (10) miles away from the Plant.

Based on these results, during 2004, the operation of the PNPP resulted in no significant increase in the radionuclide concentrations observed in the environment.

LAND USE CENSUS

In order to estimate radiation dose attributable to the operation of PNPP, the potential pathways through which public exposure can occur must be known. To identify these exposure pathways, an Annual Land Use Census is performed as part of the REMP. During the census, PNPP personnel travel every public road within a five (5) mile radius of the plant to locate key radiological exposure pathways. These key pathways include the nearest resident, garden, and milk animal in each of the sixteen meteorological sectors. The information obtained from the census is entered into a computer program, which is used to assess the hypothetical dose to members of the public. In recent years, however, it has been noted that tracts of land once used for farming are now being developed as mini-industrial parks and residential housing tracts. This is reflected in the loss of available milking animals within a five mile radius of PNPP to support the Radiological Environmental Monitoring

Program (REMP). For 2004, the predominant land use within the census area continues to be rural/agricultural.

CLAM/MUSSEL MONITORING

Clam and mussel shells can clog plant piping and components that use water from Lake Erie. For this reason, sampling for clams and mussels has been conducted in Lake Erie in the vicinity of PNPP since 1971. The monitoring is specifically for Corbicula (Asiatic clams), since their introduction into the Great Lakes, in 1981, and for Dreissena (zebra mussels), since their discovery in Lake Erie, in 1989. Since no Corbicula have ever been found at PNPP, routine Corbicula monitoring will provide early detection capability, when this pest species arrives at PNPP. The Dreissena program includes both monitoring and control and is directed at minimizing the mussel's impact on plant operation. As in past years, this program has successfully prevented Dreissena from causing any major operational problems at PNPP.

HERBICIDE USE

The use of herbicides on the PNPP site is monitored to ensure compliance with Ohio Environmental Protection Agency (OEPA) requirements and to protect the site's natural areas. Based on the results of on-site herbicide applications, and weekly general site inspections, herbicide use has not had a negative impact on the environment around the plant.

SPECIAL REPORTS

Significant environmental events (for example, spills, releases), noncompliance with environmental regulations [e.g., Ohio Environmental Protection Agency (OEPA) discharge limits], and changes in plant design or operation that affect the environment are reported to regulatory agencies as they occur.

No special reports were generated in 2004.

OHIO DEPARTMENT OF NATURAL RESOURCES SURVEY

During the summer of 2003, the Ohio Department of Natural Resources (ODNR), Division of Wildlife was granted access to perform a survey of the Perry Plant's previously documented Spotted Turtle habitat. The survey failed to identify any spotted turtles in the previously recorded area and is being attributed to the area having been overrun by the *Phragmites sp.* However, the discovery of an open canopy of fens further south on the property is prime habitat for Spotted Turtles and has yet to be impacted by *Phragmites sp.* The ODNR representative plans on returning in 2005 to monitor this new habitat and complete the survey.

INTRODUCTION

Nuclear energy provides an alternative energy source, which is readily available and has very limited impact upon the environment. To more fully understand nuclear energy as a source of generating electricity, one must understand basic radiation concepts and its occurrence in nature.

RADIATION FUNDAMENTALS

Atoms are the basic building blocks of all matter. Simply described, atoms are made up of positively and negatively charged particles, and particles which are neutral. These particles are called protons, electrons, and neutrons, respectively. The relatively large protons and neutrons are packed together in the center of the atom called the nucleus. Orbiting around the nucleus are one or more smaller electrons. In an electrically neutral atom, the positively charged protons in the nucleus balance the negatively charged electrons. Due to their dissimilar charges, the protons and electrons have a strong attraction for each other, which helps hold the atom together. Other attractive forces between the protons and neutrons keep the densely packed protons from repelling each other, and preventing the nucleus from breaking apart.

Atoms with the same number of protons in their nuclei make up an element. The number of neutrons in the nuclei of an element may vary. Atoms with the same number of protons but different numbers of neutrons are called isotopes. All isotopes of the same element have the same chemical properties and many are stable or non-radioactive. An unstable or radioactive isotope of an element is called a radioisotope, or radionuclide. Radionuclides contain an excess amount of energy in the nucleus, which is usually due to an excess number of neutrons.

Radioactive atoms attempt to reach a stable, non-radioactive state through a process known as radioactive decay. Radioactive decay is the release of energy from an atom's nucleus through the emission of radiation. Radionuclides vary greatly in the frequency with which their atoms release radiation. The length of time an atom remains radioactive is defined in terms of its half-life. Half-life is defined as the time required for a radioactive substance to lose half its activity through the process of radioactive decay. Half-lives vary from millionths of a second to millions of years.

RADIATION AND RADIOACTIVITY

Radioactive decay is a process in which the nucleus of an unstable atom becomes more stable by spontaneously emitting energy. Radiation refers to the energy that is released when radioactive decay occurs within the nucleus. This section includes a discussion on the three (3) primary forms of radiation produced by radioactive decay.

Alpha Particles

Alpha particles consist of two protons and two neutrons and have a positive charge. Because of their charge and large size, alpha particles do not travel very far when released (less than 4 inches, in air). They are unable to penetrate any solid material, such as paper or skin, to any significant depth. However, if alpha particles are released inside the body, they can damage the soft internal tissues because they deposit all their energy in a small area.

Beta Particles

Beta particles are essentially free electrons, which usually carry a negative electrical charge. They are much smaller than alpha particles and travel at nearly the speed of light. Thus they can travel for longer distances than alpha particles. External beta radiation primarily affects the skin. Because of their electrical charge, paper, plastic or thin metals can stop beta particles.

Gamma Rays

Gamma rays are bundles of electromagnetic energy, called photons, which behave as though they were particles. They are similar to visible light, but of a much higher energy. Gamma rays can travel long distances in air and are often released during radioactive decay, along with alpha and beta particles. Potassium-40 is an example of a naturally occurring radionuclide found in all humans that decays by emitting a gamma ray.

Interaction with Matter

When radiation interacts with other materials, it affects the atoms of those materials principally by knocking the negatively charged electrons out of orbit. This causes an atom to lose its electrical neutrality and become positively charged. An atom that is charged, either positively or negatively, is called an ion and the radiation is called ionizing radiation.

UNITS OF MEASURE

Some of the units of measure used in this report require explanation.

Activity

Activity is the number of atoms in a material that decay per unit of time. Each time an atom decays, radiation is emitted. The curie (Ci) is the unit used to describe the activity of a material and indicates the rate at which the atoms are decaying. One curie of activity indicates the decay of 37 billion atoms per second. Smaller units of the curie are often used in this report. Two common units are the microcurie (μCi), one millionth of a curie, and the picocurie (pCi), one trillionth of a curie. The mass, or weight, of radioactive material, which would result in one (1) curie of activity, depends on the disintegration rate. For example, one gram of radium-226 is equivalent to one (1) curie of activity. It would require about 1.5 million grams of natural uranium, however, to equal one (1) curie.

Dose

Biological damage due to alpha, beta, and gamma radiation may result from the ionization caused by these types of radiation. Some types of radiation, especially alpha particles, which causes dense local ionization, can result in much more biological damage for the same energy imparted than does gamma or beta radiation. Therefore, a quality factor must be applied to account for the different ionizing capabilities of various types of ionizing radiation. When the quality factor is multiplied by the absorbed dose (as measured in rads), the result is the dose equivalent, which is an estimate of the possible biological damage resulting from exposure to any type of ionizing radiation. The dose equivalent is measured in terms of the Roentgen Equivalent Man (rem). When discussing environmental radiation effects, the rem is a large unit. Therefore, a smaller unit, the millirem (mrem) is often used. One mrem is equivalent to 1/1000 of a rem.

LOWER LIMIT OF DETECTION

Sample results are often reported as below the Lower Limit of Detection (LLD). The LLD for an analysis is the smallest amount of radioactive material that will show a positive result for which there can be a 95% confidence that radioactivity is present. This statistical parameter is used as a measure of the sensitivity of a sample analysis. When a measurement is reported as less than the LLD (<LLD), it means that no radioactivity was detected. Had radioactivity been present at (or above) the stated LLD value, it statistically would have been detected. The NRC has established LLD values for environmental and effluent sample analyses.

BACKGROUND RADIATION

Background radiation is a part of nature. Natural background radioactive decay occurs in the soil, water, air, and space. Common sources of radiation that contribute to the natural background radiation includes: the decay of radioactive elements in the earth's crust, a steady stream of high-energy particles from space (called cosmic radiation), naturally-occurring radioactive isotopes in the human body like potassium-40, the decay of radioisotopes used in medical procedures, man-made phosphate fertilizers (phosphates and uranium are often found together in nature), fallout from nuclear weapons testing, and even household items like smoke detectors. In the United States, a person's average annual exposure from background radiation is 360 mrem, and is due to the sources shown in Figure 1 [Source: National Council on Radiation Protection and Measurements].

Figure 1: Sources of Background Radiation

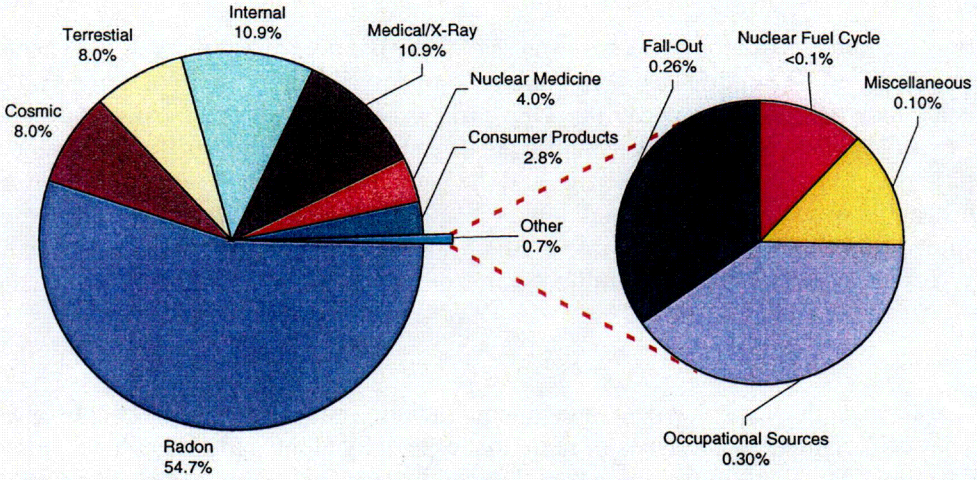

Many radionuclides are present in the environment due to sources such as cosmic radiation and fallout from nuclear weapons testing. These radionuclides are expected to be present in many of the environmental samples collected in the vicinity of PNPP. Some of the radionuclides normally present include:

- Beryllium-7, present as a result of the interaction of cosmic radiation with the upper atmosphere,
- Potassium-40, a naturally occurring radionuclide normally found in humans and throughout the environment, and
- Radionuclides from nuclear weapons testing fallout, including tritium and cesium-137. These radionuclides may also be released in minute amounts from nuclear facilities.

Beryllium-7 and potassium-40 are especially common in REMP samples. Since they are naturally occurring and are expected to be present, positive results for these radionuclides are not discussed in the section for the 2004 Sampling Program results. These radionuclides are included; however, in Appendix A, 2004 Inter-Laboratory Cross Check Comparison Program Results.

RADIOACTIVE EFFLUENT RELEASES

INTRODUCTION

The source of radioactive material in a nuclear power plant is the generation of fission products (e.g., noble gas, iodine, and particulate) or neutron activation of water and corrosion products (e.g., tritium and cobalt). The majority of the fission products generated remain within the nuclear fuel pellet and fuel cladding. Most fission products that escape from the fuel cladding, as well as the majority of the activated corrosion products, are removed by plant processing equipment.

During the normal operation of a nuclear power plant, small amounts of radioactive material are released in the form of solids, liquids, and gases. PNPP was designed, and is operated in such a manner as to control and monitor these effluent releases. Effluents are controlled to ensure any radioactivity released to the environment is minimal and within regulatory limits. Effluent release programs include the operation of monitoring systems, in-plant sampling and analysis, quality assurance, and detailed procedures covering all aspects of effluent monitoring.

The liquid and gaseous radioactive waste treatment systems at PNPP are designed to collect and process these wastes in order to remove most of the radioactivity. Effluent monitoring systems are used to provide continuous indication of the radioactivity present and are sensitive enough to measure several orders of magnitude lower than the applicable release limits. This monitoring equipment is equipped with alarms and indicators in the plant control room. The alarms are set to provide warnings to alert plant operators when radioactivity levels reach a small fraction of actual limits. The waste streams are sampled and analyzed to identify and quantify the radionuclides being released to the environment.

Gaseous effluent release data is coupled with on-site meteorological data in order to calculate the dose to the general public. Devices are maintained at various locations around PNPP to constantly sample the air in the surrounding environment. Frequent samples of other environmental media are also taken to determine if any radioactive material deposition has occurred. The Radiological Environmental Monitoring Program (REMP) is described in detail in the next section.

Generation of solid waste is carefully monitored to identify opportunities for minimization. Limiting the amount of material taken into the plant, sorting material as radioactive or non-radioactive, shredding and compacting, or incinerating waste once it is identified help to lower the volume of radioactive solid waste generated. Solid waste is shipped to a licensed burial site.

REGULATORY LIMITS

The Nuclear Regulatory Commission has established limits for liquid and gaseous effluents that comply with:

- Title 10 of the Code of Federal Regulations, Part 20 (Standards for Protection Against Radiation) [10CFR20], Appendix B;
- Title 10 of the Code of Federal Regulations, Part 50 (Domestic Licensing of Production and Utilization Facilities) [10CFR50], Appendix I; and
- Title 40 of the Code of Federal Regulations, Part 190 (Environmental Radiation Protection Standards for Nuclear Power Plants) [40CFR190].

These limits were incorporated into the PNPP Technical Specifications, and subsequently into the PNPP Offsite Dose Calculation Manual (ODCM). The ODCM prescribes the maximum doses and dose rates due to radioactive effluents resulting from the operation of PNPP. These limits are defined in several ways to limit the overall impact on persons living near the plant. Since there are

no other fuel sources near the PNPP, the 40CFR190 limits, which are described below, were not exceeded in 2004.

The 40CFR190 limit for total direct-radiation dose is 25 mrem. For 2004, the total whole body dose to a member of the general public, considering all sectors, was 9.40E-2 mrem. This value was determined by summing the annual whole body doses from liquid and gaseous radioactive effluents, the annual gaseous and liquid organ dose (refer to Table 7) and the maximum, direct-radiation dose. Since the direct radiation dose, as determined by TLD, was indistinguishable from natural background (refer to Figure 8), it was not included in the calculation.

Liquid Effluents

The concentration of radioactive material released in liquid effluents to unrestricted areas shall be limited to the concentrations specified in 10CFR20, Appendix B, Table 2, Column 2 for radionuclides other than dissolved or entrained noble gases, as required by the ODCM. For dissolved or entrained noble gases, the concentration shall be limited to 2.0E-04 µCi/mL of total activity. These values are the maximum effluent concentrations.

The dose or dose commitment to a member of the public from radioactive materials in liquid effluents released to unrestricted areas shall be limited to the following:

During any calendar quarter:

Less than or equal to 1.5 mrem to the whole body, and

Less than or equal to 5 mrem to any organ.

During any calendar year:

Less than or equal to 3 mrem to the whole body, and

Less than or equal to 10 mrem to any organ.

Gaseous Effluents

Dose rate due to radioactive materials released in gaseous effluents from the site to areas at and beyond the site boundary shall be limited to the following:

Noble gases:

Less than or equal to 500 mrem per year to the whole body, and

Less than or equal to 3000 mrem per year to any organ.

Iodine-131, Iodine-133, Tritium, and all radionuclides in particulate form with half lives greater than eight days:

Less than or equal to 1500 mrem per year to any organ

Air dose due to noble gases to areas at, and beyond the site boundary, shall be limited to the following:

During any calendar quarter:

Less than or equal to 5 mrad for gamma radiation, and

Less than or equal to 10 mrad for beta radiation.

During any calendar year:

Less than or equal to 10 mrad for gamma radiation, and

Less than or equal to 20 mrad for beta radiation.

Dose to a member of the public from Iodine-131, Iodine-133, Tritium, and all radionuclides in particulate form with half lives greater than eight days in gaseous effluents released to areas at and beyond the site boundary shall be limited to the following:

Less than or equal to 7.5 mrem to any organ per any calendar quarter, and

Less than or equal to 15 mrem to any organ per any calendar year.

The PNPP ODCM does not contain a concentration reference for gaseous effluents. For this reason, effluent concentrations are not used to calculate maximum release rates for gaseous effluents.

RELEASE SUMMARY

Effluents are sampled and analyzed to identify both the type and quantity of radionuclides present. This information is combined with effluent path flow measurements to determine the composition, concentration, and dose contribution of the radioactive effluents.

Liquid Effluents

The PNPP liquid radioactive waste system is designed to collect and treat all radioactive liquid waste produced in the plant. The treatment process used for radioactive liquid waste depends on its physical and chemical properties. It is designed to reduce the concentration of radioactive material in the liquid by filtration to remove suspended solids and demineralization to remove dissolved solids. Normally, the effluent from the liquid radioactive waste system is returned to plant systems. To reduce the volume of water stored in plant systems; however, the processed liquid effluent may be discharged from the plant via a controlled release. In this case, effluent activity and dose calculations are performed prior to, and after discharging this processed water to Lake Erie to ensure regulatory compliance and dose minimization principals are maintained.

Liquid radioactive waste system effluents may be intermittently released, which are considered to be "batch" releases. Table 1 provides information on the number and duration of these releases for 2004.

Table 1: Liquid Batch Releases

	QUARTER 1	QUARTER 2	QUARTER 3	QUARTER 4	TOTAL
Number of batch releases	21	44	1	7	73
Total time period for batch releases, min	1.06E+05	4.96E+04	2.24E+02	1.75E+03	1.56E+05
Maximum time for a batch release, min	5.03E+04	1.00E+04	2.24E+02	3.96E+02	5.03E+04
Average time period for a batch release, min	5.05E+03	1.13E+03	2.24E+02	2.50E+02	2.16E+03
Minimum time for a batch release, min	1.00E+01	1.20E+01	2.24E+02	1.00E+00	1.00E+00
Average stream flow during periods of effluent release into a flowing stream, L/min	1.66E+05	1.76E+05	2.16E+05	1.55E+05	1.69E+05

In addition to batch releases, a continuous release may occur with the release of the Turbine Building Supply Plenum Drains. The moisture from the outside air is condensed and flows into a drain pan. During hot, humid months with low wind speed, the potential exists for some of the gaseous effluent exhaust from the plant to be recycled back into the plant through the Turbine Building Supply Plenums. Since the air from the plant gaseous effluents can contain tritium, then the water in the exhaust plenums can also contain tritium. One such continuous release did occur during the year with a duration of 200955 minutes and a discharge volume of 7.51E+06 liters. Tritium concentration for this release was 2.42E-07 µCi/ml.

In December, 2004, a batch liquid release was released into the Emergency Service Water (ESW) System when a contaminated hose was inadvertently used for performing a background check on the ESW radiation monitor. The ESW system was shutdown during performance of the radiation monitor background check. The batch release occurred when the ESW system was started after

introducing contaminated water through the hose into the radmonitor. Doses were calculated prior to the release and after the release in accordance with ODCM methodologies. The decision was made to treat the contaminated water in the radmonitor as a batch release in order to prevent the excessive radioactive waste that would have been generated from draining the ESW system back into the plant. If the decision had been made to drain the ESW system back into the plant, the potential existed to necessitate additional liquid batch releases, which would have resulted in a higher public dose than occurred with this one release. Doses for this release were less than .0003% of the applicable limits.

Table 2 provides information on the nuclide composition for the liquid radioactive effluent system releases. If a radionuclide was not present at a level "greater than or equal to the LLD" (≥LLD), then the value is expressed as "less than the LLD" (<LLD). In each case, LLDs were met, or were below the levels required by the ODCM. Table 2a provides information specific to radioactive effluent batch releases while Table 2b provides information specific to continuous radioactive effluent releases.

Table 2: Summation of All Liquid Effluent Releases

	QUARTER 1	QUARTER 2	QUARTER 3	QUARTER 4	EST. TOTAL ERROR, %
A. Fission and Activation Products					
1. Total Released, Ci (excluding tritium, gases, alpha)	1.69E-03	2.82E-03	<LLD	5.11E-04	1.00E+01
2. Average Diluted Concentration, µCi/mL *	6.24E-11	9.27E-11	<LLD	1.71E-11	
3. Percent of Applicable Limit, %	N/A	N/A	N/A	N/A	
B. Tritium					
1. Total Released, Ci	2.82E+01	3.80E+01	9.68E-01	5.58E+00	1.00E+01
2. Average Diluted Concentration, µCi/mL	1.04E-06	1.25E-06	2.47E-08	1.87E-07	
3. Percent of Applicable Limit, %	1.04E-01	1.25E-01	2.47E-03	1.87E-02	
C. Dissolved and Entrained Gases					
1. Total Released, Ci	<LLD	4.15E-04	<LLD	4.12E-05	1.00E+01
2. Average Diluted Concentration, µCi/mL	<LLD	1.36E-11	<LLD	1.38E-12	
3. Percent of Applicable Limit, %	0	6.80E-06	0	6.90E-07	
D. Alpha Activity, Ci	<LLD	<LLD	<LLD	3.70E-06	1.00E+01
E. Waste Volume Released, Liters (prior to dilution)	2.34E+06	7.08E+06	5.21E+06	1.02E+06	1.00E+00
F. Dilution Water Volume Used, Liters	2.71E+10	3.04E+10	3.92E+10	2.98E+10	2.8E+01

<LLD – Less than the lower limit of detection
N/A – Not Applicable, the ODCM does not have a limit for fission and activation products.
**Average diluted concentrations are based on total volume of water released during quarter.*

Table 2a: Summation of Batch Liquid Effluent Releases

	QUARTER 1	QUARTER 2	QUARTER 3	QUARTER 4	EST. TOTAL ERROR, %
A. Fission and Activation Products					
Total Released, Ci (excluding tritium, gases, alpha)	1.69E-03	2.82E-03	<LLD	5.11E-04	1.00E+01
B. Tritium					
Total Released, Ci	2.82E+01	3.80E+01	9.63E-01	5.58E+00	1.00E+01
C. Dissolved and Entrained Gases					
Total Released, Ci	<LLD	4.15E-04	<LLD	4.12E-05	1.00E+01
D. Alpha Activity, Ci	<LLD	<LLD	<LLD	3.70E-06	1.00E+01
E. Waste Volume Released, Liters (prior to dilution)	2.34E+06	4.78E+06	2.54E+05	7.77E+05	1.00E+00

<LLD – Less than the lower limit of detection

Table 2b: Summation of Continuous Liquid Effluent Releases

	QUARTER 1	QUARTER 2	QUARTER 3	QUARTER 4	EST. TOTAL ERROR, %
A. Fission and Activation Products					
Total Released, Ci (excluding tritium, gases, alpha)	0	<LLD	<LLD	<LLD	1.00E+01
B. Tritium					
Total Released, Ci	0	3.80E+01	9.68E-01	5.58E+00	1.00E+01
C. Dissolved and Entrained Gases					
Total Released, Ci	0	<LLD	<LLD	<LLD	1.00E+01
D. Alpha Activity, Ci	0	<LLD	<LLD	<LLD	1.00E+01
E. Waste Volume Released, Liters (prior to dilution)	0	2.30E+06	4.96E+06	2.44E+05	1.00E+00

<LLD – Less than the lower limit of detection

Table 3 lists the total number of curies (Ci) of each radionuclide present in liquid effluent releases for each quarter. If a radionuclide was not present at a level "greater than or equal to the LLD" (≥LLD), then the value is expressed as "less than the LLD" (<LLD). In each case, the LLDs were either met, or were below the levels required by the ODCM.

Table 3: Radioactive Liquid Effluent Nuclide Composition

	UNIT	QUARTER 1	QUARTER 2	QUARTER 3	QUARTER 4	ANNUAL TOTAL
Tritium	Ci	2.82E+01	3.80E+01	9.68E-01	5.58E+00	7.27E+01
Chromium-51	Ci	<LLD	<LLD	<LLD	<LLD	<LLD
Manganese-54	Ci	1.64E-04	1.56E-04	<LLD	6.05E-05	3.81E-04
Iron-55	Ci	<LLD	1.67E-03	<LLD	<LLD	1.67E-03
Iron-59	Ci	<LLD	<LLD	<LLD	<LLD	<LLD
Cobalt-58	Ci	1.17E-05	<LLD	<LLD	1.12E-05	2.29E-05
Cobalt-60	Ci	1.05E-03	9.06E-04	<LLD	3.82E-04	2.34E-03
Zinc-65	Ci	<LLD	3.64E-05	<LLD	<LLD	3.64E-05
Strontium-92	Ci	<LLD	<LLD	<LLD	<LLD	<LLD
Zirconium-95	Ci	<LLD	<LLD	<LLD	<LLD	<LLD
Niobium-95	Ci	<LLD	<LLD	<LLD	<LLD	<LLD
Technetium-99M	Ci	<LLD	<LLD	<LLD	<LLD	<LLD
Rhuthenium-105	Ci	<LLD	<LLD	<LLD	<LLD	<LLD
Silver-110m	Ci	1.13E-05	<LLD	<LLD	<LLD	1.13E-05
Antimony-124	Ci	<LLD	<LLD	<LLD	<LLD	<LLD
Antimony-125	Ci	<LLD	<LLD	<LLD	<LLD	<LLD
Iodine-131	Ci	<LLD	<LLD	<LLD	<LLD	<LLD
Xenon-133	Ci	<LLD	4.15E-04	<LLD	4.12E-05	4.56E-04
Cesium-134	Ci	1.52E-04	<LLD	<LLD	1.61E-05	1.68E-04
Cesium-137	Ci	3.00E-04	4.47E-05	<LLD	4.07E-05	3.85E-04
Cesium-138	Ci	<LLD	<LLD	<LLD	<LLD	<LLD
Lanthanum-140	Ci	<LLD	<LLD	<LLD	<LLD	<LLD
Gold-199	Ci	<LLD	<LLD	<LLD	<LLD	<LLD
Total for Period	**Ci**	**2.82E+01**	**3.80E+01**	**9.68E-01**	**5.58E+00**	**7.28E+01**

<LLD – Less than the lower limit of detection

Gaseous Effluents

Gaseous effluents are made up of fission and activation gases, iodine and particulate releases. The fission and activation gas releases are primarily a result of containment purge operations, small steam leaks, and offgas system operation. The iodine and particulate releases are primarily a result of small steam leaks. Gaseous effluents from PNPP exit the plant via one of four effluent vents. Each of these four effluent vents contains radiation detectors that continuously monitor the air to ensure that the levels of radioactivity released are well below regulatory limits. Samples are also collected and analyzed on a routine basis to ensure regulatory compliance and dose minimization principals are maintained. The majority of gaseous effluents released from PNPP are considered continuous and at ground level.

A summation of all gaseous radioactive effluent releases is given in Table 4. If a radionuclide was not present at a level "greater than or equal to the LLD" (≥LLD), then the value is expressed as "less than the LLD" (<LLD). In each case, the measured LLDs either met or were below the levels required by the PNPP ODCM.

Table 4: Summation of All Gaseous Effluents

	QUARTER 1	QUARTER 2	QUARTER 3	QUARTER 4	EST. TOTAL ERROR, %
A. Fission and Activation Products					
1. Total Released, Ci	1.27E+01	8.75E+00	5.87E-02	9.67E+00	1.00E+01
2. Average Release Rate, µCi/sec	1.62E+00	1.11E+00	7.39E-03	1.22E+00	
3. Percent of Applicable Limit, %	N/A	N/A	N/A	N/A	
B. Iodine					
1. Total Iodine-131 Released, Ci	<LLD	7.84E-05	<LLD	3.57E-05	1.00E+01
2. Average Release Rate, µCi/sec	<LLD	9.97E-06	<LLD	4.50E-06	
3. Percent of Applicable Limit, %	N/A	N/A	N/A	N/A	
C. Particulates with Half-Lives > 8 days					
1. Total Released, Ci	3.77E-04	<LLD	<LLD	<LLD	1.00E+01
2. Average Release Rate, µCi/sec	4.80E-05	<LLD	<LLD	<LLD	
3. Percent of Applicable Limit, %	N/A	N/A	N/A	N/A	
D. Alpha Activity, Ci	4.41E-07	4.52E-07	7.01E-07	2.73E-07	
E. Tritium					
1. Total Released, Ci	7.59E-01	5.44E-01	5.37E-01	5.47E-01	1.00E+01
2. Average Release Rate, µCi/sec	9.66E-02	6.91E-02	6.75E-02	6.88E-02	
3. Percent of ODCM Limit, %	N/A	N/A	N/A	N/A	

<LLD – Less than the lower limit of detection
N/A – Not Applicable, the ODCM does not have a limit for fission and activation products.

The radionuclide composition of all gaseous radioactive effluents for a continuous-mode, ground-level release is given in Table 5. If a radionuclide was not present at a level "greater than or equal to the LLD" (≥LLD), then the value is expressed as "less than the LLD" (<LLD). In each case, LLDs were met or were below the levels required by the ODCM.

Table 5: Radioactive Gaseous Effluent Nuclide Composition

	UNIT	QUARTER 1	QUARTER 2	QUARTER 3	QUARTER 4	ANNUAL TOTAL
A. FISSION AND ACTIVATION GASES						
Tritium	Ci	7.59E-01	5.44E-01	5.37E-01	5.47E-01	2.39E+00
Argon-41	Ci	<LLD	7.87E-03	<LLD	<LLD	7.87E-03
Krypton-85m	Ci	<LLD	3.71E-02	<LLD	3.70E-02	7.41E-02
Krypton-85	Ci	<LLD	5.53E-01	<LLD	<LLD	5.53E-01
Krypton-87	Ci	1.07E-01	1.15E-01	<LLD	<LLD	2.22E-01
Krypton-88	Ci	<LLD	9.48E-02	<LLD	1.54E-02	1.10E-01
Xenon-131m	Ci	<LLD	<LLD	<LLD	<LLD	<LLD
Xenon-133m	Ci	<LLD	8.47E-02	<LLD	1.03E-01	1.88E-01
Xenon-133	Ci	8.95E-03	5.55E+00	2.77E-02	6.60E+00	1.22E+01
Xenon-135m	Ci	1.28E+00	8.53E-02	<LLD	2.09E-01	1.57E+00
Xenon-135	Ci	1.13E+00	1.60E+00	3.10E-02	2.71E+00	5.47E+00
Xenon-137	Ci	7.66E-01	2.82E-01	<LLD	<LLD	1.05E+00
Xenon-138	Ci	9.45E+00	3.48E-01	<LLD	<LLD	9.80E+00
Total for Period	**Ci**	**1.35E+01**	**9.30E+00**	**5.96E-01**	**1.02E+01**	**3.36E+01**
B. IODINE						
Iodine-131	Ci	<LLD	7.84E-05	<LLD	3.57E-05	1.14E-04
Iodine-132	Ci	<LLD	<LLD	<LLD	<LLD	<LLD
Iodine-133	Ci	<LLD	3.34E-04	<LLD	3.20E-05	3.66E-04
Iodine-134	Ci	<LLD	<LLD	<LLD	<LLD	<LLD
Iodine-135	Ci	<LLD	<LLD	<LLD	<LLD	<LLD
Total for Period	**Ci**	**<LLD**	**4.12E-04**	**<LLD**	**6.77E-05**	**4.80E-04**
B. PARTICULATE						
Chromium-51	Ci	<LLD	<LLD	<LLD	<LLD	<LLD
Manganese-54	Ci	<LLD	<LLD	<LLD	<LLD	<LLD
Iron-59	Ci	<LLD	<LLD	<LLD	<LLD	<LLD
Cobalt-58	Ci	<LLD	<LLD	<LLD	<LLD	<LLD
Cobalt-60	Ci	<LLD	<LLD	<LLD	<LLD	<LLD
Zinc-65	Ci	<LLD	<LLD	<LLD	<LLD	<LLD
Rubidium-88	Ci	<LLD	<LLD	<LLD	<LLD	<LLD
Rubidium-89	Ci	<LLD	<LLD	<LLD	<LLD	<LLD
Strontium-89	Ci	3.92E-05	<LLD	<LLD	<LLD	3.92E-05
Strontium-90	Ci	<LLD	<LLD	<LLD	<LLD	<LLD
Strontium-91	Ci	<LLD	<LLD	<LLD	<LLD	<LLD
Yttrium-91m	Ci	<LLD	<LLD	<LLD	<LLD	<LLD
Strontium-92	Ci	<LLD	<LLD	<LLD	<LLD	<LLD
Zirconium-95	Ci	<LLD	<LLD	<LLD	<LLD	<LLD
Molybdenum-99	Ci	<LLD	<LLD	<LLD	<LLD	<LLD
Cesium-138	Ci	1.60E-04	<LLD	<LLD	<LLD	1.60E-04
Barium-139	Ci	1.78E-04	<LLD	<LLD	<LLD	1.78E-04
Barium-140	Ci	<LLD	<LLD	<LLD	<LLD	<LLD
Lanthanum-140	Ci	<LLD	<LLD	<LLD	<LLD	<LLD
Lanthanum-142	Ci	<LLD	<LLD	<LLD	<LLD	<LLD
Total for Period	**Ci**	**3.77E-04**	**<LLD**	**<LLD**	**<LLD**	**3.77E-04**

<LLD – Less than the lower limit of detection

Solid Waste

There were no shipments of PNPP solid radioactive waste transported, by truck, directly to the Barnwell, South Carolina, disposal facility for burial. Solid radioactive waste from PNPP was processed and combined with waste from several other utilities by intermediate vendors (Duratek in Oak Ridge, TN and Studsvik in Erwin, TN). This waste was ultimately sent to the Barnwell, South Carolina, or Clive, Utah, disposal facilities for burial. Additionally, radioactive waste was shipped from ATG Richland, WA to Clive, UT for final disposal. No irradiated fuel or components were transported from PNPP in 2004. The solid radioactive waste summary in Table 6 includes all PNPP shipments.

Table 6: Solid Waste Shipped Offsite for Burial or Disposal

A. Type of Solid Waste Shipped	VOLUME m^3	ACTIVITY Ci	PERIOD	EST. TOTAL ERROR %
Spent resin, filter sludge, evaporator bottoms, etc.	9.2	468.0	1/1/2004-12/31/2004	+/-.25
Dry compressible waste, contaminated equipment, etc.	19.5	0.689	1/1/2004-12/31/2004	+/-.25
Irradiated components, control rods, etc.	0	0	N/A	N/A
Other (describe)	0	0	N/A	N/A

B. Estimate of Major[1] Nuclide Composition (by type of waste)	RADIONUCLIDE	ABUNDANCE %	EST. TOTAL ERROR, %
Spent Resin, Filter Sludge, Evaporator Bottoms, etc.	Mn-54 Fe-55 Co-58 Co-60 Zn-65	4.7 56.0 1.1 34.0 28.0	±25
Dry Compressible Waste, Contaminated Equipment, etc.	Mn-54 Fe-55 Co-60 Ni-63 Zn-65	3.0 48.9 43.9 1.2 1.1	±25
Irradiated Components, Control Rods, etc.	None	N/A	N/A
Other (describe)	None	N/A	N/A

C. Disposition	Number of Shipments	Mode of Transportation	Destination
Solid Waste[2]	0	N/A	N/A
Irradiated Fuel Shipments	0	N/A	N/A

N/A -- Not Applicable
(1) -- "Major" is defined as any individual radionuclide identified as >1% of the waste type abundance.
(2) -- Additional shipments were made to Studsvik, in Erwin, TN; Duratek, Oak Ridge, TN. This waste was combined with waste from other utilities disposed of at Barnwell, SC or Envirocare of Utah.

METEOROLOGICAL DATA

The Meteorological Monitoring System at PNPP consists of a 60-meter tower equipped with two independent systems for measuring wind speed, wind direction, and temperature at both 10-meter and 60-meter heights. The tower also has instrumentation to measure dew point and barometric pressure. Data is logged from the tower through separate data loggers, and transmitted to a common plant computer. This system compiles the data and calculates a variety of atmospheric parameters, communicates with the Meteorological Information Dose Assessment System (MIDAS), and sends data over communication links to the plant Control Room.

DOSE ASSESSMENT

The maximum concentration for any radioactive release is controlled by the limits set forth in Title 10 of the Code of Federal Regulations, Part 20 (10CFR20). Sampling, analyzing, processing, and monitoring the effluent stream ensures compliance with these concentration limits. Dose limit compliance is verified through periodic dose assessment calculations. Some dose calculations are conservatively performed for a hypothetical individual who is assumed to reside on the site boundary at the highest potential dose location all year. This person, called the "maximum individual", would incur the maximum potential dose from direct exposure (air plus ground plus water), inhalation, and ingestion of water, milk, vegetation, and fish. Because no one actually meets these criteria, the actual dose received by a real member of the public is significantly less than what is calculated for this hypothetical individual.

Dose calculations for this maximum individual at the site boundary are performed for two cases. First, they are performed using data for a 360° radius around the plant site (land and water based meteorological sectors), even though some of these sectors are over Lake Erie, which has no permanent residents. The second calculation is performed considering only those sectors around the plant in which people reside (land-based meteorological sectors).

The calculated hypothetical, maximum individual dose values at the site boundary are provided in Table 7. This table considers all meteorological sectors around PNPP and provides either the whole body or worst-case, organ dose values. If any radionuclide was not present at a level greater than the LLD, it was not used in the dose calculations.

Table 7: Maximum Individual Site Boundary Dose, Considering All Sectors

TYPE OF DOSE	ORGAN	ESTIMATED DOSE, mrem	LIMIT	% OF LIMIT
Liquid Effluent	Whole body	7.38E-03	3.0E+00	2.5E-01
	Liver	9.55E-03	1.0E+01	9.6E-02
Noble Gas - gamma air	N/A	4.11E-02	1.0E+01	4.1E-01
- beta air	N/A	3.25E-02	2.0E+01	1.6E-01
Noble Gas	Whole body	2.55E-02	5.0E+00	5.1E-01
	Skin	5.16E-02	1.5E+01	3.4E-01
Particulate & Iodine	Thyroid	3.32E-02	1.5E+01	2.2E-02

The calculated hypothetical, maximum population dose values at the site boundary are provided in Table 8. This table considers all meteorological sectors around PNPP and provides either the whole body or worst-case, organ dose values.

Table 8: Population Dose, Considering All Sectors

	ORGAN	ESTIMATED DOSE person-rem
Liquid Effluent	Whole body	1.4E+00
	Thyroid	1.0E+00
Gaseous Effluent	Whole body	1.2E-03
	Thyroid	1.6E-03

Table 9 provides the calculated hypothetical maximum site boundary dose values considering only the land-based sectors. If any radionuclide was not present at a level greater than the LLD, it was not used in the dose calculations.

Table 9: Maximum Individual Site Boundary Dose, Considering Sectors on Land

TYPE OF DOSE	ORGAN	ESTIMATED DOSE, mrem	LIMIT	% OF LIMIT
Liquid Effluent	Whole body	7.38E-03	3.0E+00	2.5E-01
	Liver	9.55E-03	1.0E+01	9.6E-02
Noble Gas - gamma air	N/A	3.80E-03	1.0E+01	3.8E-02
- beta air	N/A	4.14E-03	2.0E+01	2.1E-02
Noble Gas	Whole body	2.23E-03	5.0E+00	4.5E-02
	Skin	5.57E-03	1.5E+01	3.7E-02
Particulate & Iodine	Thyroid	9.28E-04	1.5E+01	6.2E-03

Other dose calculations are performed for a hypothetical individual who is assumed to be inside the site boundary for some specified amount of time. This person would receive the maximum dose during the time spent inside site boundary. Because no one actually meets the criteria established for these conservative calculations, the actual dose received by a real member of the public is significantly less than what is calculated for this hypothetical individual. This dose is assessed relative to the offsite dose, and considers dilution, dispersion, and occupancy factors.

The highest hypothetical dose from liquid effluents to a member of the public inside the site boundary is to a person who is fishing on Lake Erie from the shore on PNPP property. The calculations assume that this person will spend 60 hours per year fishing, with a liquid dilution factor of 10. The ratio of the exposure pathway to the doses calculated for offsite locations yields the dose values shown in Table 10.

Table 10: Maximum Site Dose from Liquid Effluents

	WHOLE BODY DOSE, mrem	ORGAN DOSE, mrem
First Quarter	7.5E-05	8.8E-05
Second Quarter	5.1E-05	6.0E-05
Third Quarter	0.0E+00	0.0E+00
Fourth Quarter	2.9E-05	3.4E-05
Annual	1.6E-04	1.8E-04

Although several cases were evaluated to determine the highest hypothetical dose from gaseous effluents to members of the public inside site boundary, the activity inside the site boundary with the highest dose potential is also shoreline fishing. The cases evaluated included traversing a public road within the site boundary, shoreline fishing (assuming fishing 60 hours per year), non-plant related training, car-pooling, and job interviews. The maximum on-site gaseous doses generated are shown in Table 11.

Table 11: Maximum Site Dose from Gaseous Effluents

	WHOLE BODY DOSE, mrem	ORGAN DOSE, mrem
First Quarter	2.4E-03	4.6E-03
Second Quarter	2.6E-04	9.1E-04
Third Quarter	3.4E-05	4.8E-05
Fourth Quarter	3.2E-04	8.0E-04
Annual	2.9E-03	5.9E-03

An average whole body dose to individual members of the public at or beyond the site boundary is then determined by combining the dose from gaseous and liquid radiological effluents. The dose from gaseous radiological effluents is based upon the population that lives within 50 miles of PNPP (2,420,000 people). The dose from liquid radiological effluents is determined for the population that receives drinking water from intakes within 50 miles of PNPP (1,820,000 people). The results of this calculation are provided in Table 12.

Table 12: Average Individual Whole Body Dose

	Liquid Effluents (mrem)	Gaseous Effluents (mrem)
First Quarter	1.9E-07	4.0E-10
Second Quarter	1.2E-07	5.0E-11
Third Quarter	2.4E-07	4.0E-11
Fourth Quarter	2.9E-08	1.5E-11
Annual	5.8E-07	5.0E-10

ABNORMAL RELEASES

There were no abnormal radioactive release events during 2004.

NON-COMPLIANCES

There was one (1) non-compliance to the ODCM Controls requirements in 2004:

The Radwaste High-Flow Discharge Header Flow Monitor was inoperable greater than 30 days

The Radwaste High-Flow Discharge Header Flow Monitor, 0G50-N445, was declared inoperable on 10/2/04 due to a malfunctioning turbine flow meter. The repair was delayed until troubleshooting could be performed. Troubleshooting determined the turbine flowmeter was the problem and a replacement meter had to be obtained. Shipping the replacement meter was delayed while the vendor performed modifications to adapt the meter to Perry's system. The flowmeter was installed, tested,

and returned to service on 11/11/04. There were no liquid batch releases during the period when the monitor was not operable.

OFFSITE DOSE CALCULATION MANUAL CHANGES

During this reporting period, there were two (2) revisions to the Offsite Dose Calculation Manual:

Revision 10

- Incorporated a Shielding Factor of 1.0 when calculating compliance with dose rate limits.
- Replaced MPC with EC to reflect current 10CFR20 terminology.
- Changed "10CFR20.106" to "10 CFR20" in Section 3.0.1 when referring to gaseous release limits.
- Removed reference to Commitment L01117 since this commitment has been archived and is no longer active.
- Included provisions for using tritium values for batch releases when composites were not performed in the composite period prior to the release.
- Correct typographical error in calculation A-1.

Revision 11

- Included factors for calculating doses for Ta183, Re188, & Au198.
- Removed statement from Section 2.1.2 regarding no continuous liquid releases being present at Perry since the Turbine Building Ventilation System (M35) system drain discharge does contain radioactivity.

PROCESS CONTROL PROGRAM CHANGES

During this reporting period, there was one (1) change to the Process Control Program:

- Correct a minor typographical error.
- Standardize the inconsistent references to Chem-Nuclear Systems Incorporated.
- Add a reference that clarifies where the current formulas for solidification processes can be found.
- Updated references.

RADIOLOGICAL ENVIRONMENTAL MONITORING

INTRODUCTION

The Radiological Environmental Monitoring Program (REMP) was established at PNPP for several reasons. First, it verifies the adequacy of plant design and operation to control radioactive materials and limit effluent releases. Second, it assesses the radiological impact, if any, that the plant has had on the surrounding environment. Third, it ensures compliance with regulatory guidelines. The REMP is conducted in accordance with the PNPP Operating License, Appendix B, Technical Specifications and the ODCM. The Nuclear Regulatory Commission (NRC) established the REMP requirements.

A wide variety of samples are collected as part of the PNPP REMP. The selection of sample types, sampling locations, and sample collection frequency are based on many things. Potential pathways for the transfer of radionuclides through the environment to humans, sample availability, local meteorology, population characteristics, land use and NRC requirements are all considered.

To ensure that the REMP data are meaningful and useful, detailed sampling methods and procedures are followed. This ensures that samples are collected in the same manner and from the same locations each time. All samples are packaged on site, then shipped to an independent vendor laboratory for analysis. The vendor laboratory analyzes the samples and reports results to the PNPP Chemistry Unit staff, the Lake County General Health District, and the State of Ohio Department of Health.

The REMP began in 1981 with 24 direct radiation monitoring locations, four sediment locations, and two fish sampling locations. In 1982, collections of air, water, milk, food products, and feed/silage were added. Vegetation, precipitation and soil were added in 1985. Although the NRC did not require these last three media, they were incorporated into the program to establish baseline data. In 1993, feed/silage sampling was dropped from the program, based on ten years worth of data. For the same reason, strontium analyses were deleted from the program in 1994, gross beta and tritium were deleted from precipitation analyses in 1995, and precipitation sampling was deleted entirely in 1996. In 1999, grass and soil sampling were dropped from the program.

SAMPLING LOCATIONS

REMP samples are collected at numerous locations, both on site and up to 22 miles away from the plant. Sampling locations are divided into two general categories: indicator and control. Indicator locations are those which would be most likely to display effects caused by plant operation. They are relatively close to the plant. Control locations are those which are considered to be unaffected by plant operation. Typically, they are a greater distance from the plant, in the least prevalent wind directions. Data obtained from the indicator locations are compared with data from the control locations. This comparison allows naturally occurring background radiation to be taken into account when evaluating any radiological impact PNPP may have had on the environment. Table 13, Figure 2, Figure 3 and Figure 4 identify the PNPP REMP sampling locations.

Many REMP samples are collected in addition to those required by the PNPP ODCM. The ODCM requirements for each sample type are discussed in more detail below. Sample types and locations required by the ODCM are shown in **Bold** in Table 13.

Table 13: REMP Sampling Locations (1)

Location #	Description	Miles	Direction	Media(2)
1	Chapel Road	3.4	ENE	TLD, AIP
2	Kanda Garden	1.9	ENE	Food Products
3	Meteorological Tower	1.0	SE	TLD, AIP
4	Site Boundary	0.7	S	TLD, AIP
5	Quincy Substation	0.6	SW	TLD, Air
6	Concord Service Center	11.0	SSW	TLD, AIP
7	Site Boundary	0.6	NE	TLD, AIP
8	Site Boundary	0.8	E	TLD
9	Site Boundary	0.7	ESE	TLD
10	Site Boundary	0.8	SSE	TLD
11	Parmly Rd.	0.6	SSW	TLD
12	Site Boundary	0.6	WSW	TLD
13	Madison-on-the-Lake	4.7	ENE	TLD
14	Hubbard Rd.	4.9	E	TLD
15	Eagle St. Substation	5.1	ESE	TLD
16	Eubank Garden.	0.8	S	Food Products
20	Rainbow Farms	1.9	E	Food Products
21	Hardy Rd.	5.1	WSW	TLD
23	High St. Substation	7.9	WSW	TLD
24	St. Clair Ave.	15.1	SW	TLD
25	Offshore - PNPP discharge	0.6	NNW	Sediment, Fish
26	Offshore - Redbird	4.2	ENE	Sediment
27	Offshore - Fairport Harbor	7.9	WSW	Sediment
28	CEI Ashtabula Plant Intake	22.0	ENE	Water
29	River Rd.	4.3	SSE	TLD
30	Lane Rd.	4.8	SSW	TLD
31	Wood and River Rd.	4.8	SE	TLD
32	Offshore - Mentor	15.8	WSW	Sediment, Fish
33	River Rd.	4.5	S	TLD
34	PNPP Intake	0.7	NW	Water
35	Site Boundary	0.6	E	TLD, AIP
36	Lake County Water Plant	3.9	WSW	TLD, Water
37	Gerlica Farm	1.5	ENE	Food Products
41	Tuttle Farm	5.8	SSE	Milk
51	Rettger Milk Farm	9.6	S	Milk
53	Neff Perkins	0.5	WSW	TLD
54	Hale Rd. School	4.6	SW	TLD
55	Center Rd.	2.5	S	TLD
56	Madison High School	4.0	ESE	TLD
58	Antioch Rd.	0.8	ENE	TLD
59	Lake Shoreline at Green Rd.	4.0	ENE	Water
60	Lake Shoreline at Perry Park	1.0	WSW	Water
61	Keller Milk Farm	7.4	SE	Milk
63	Minor Stream Mouth	0.08	NNE	Sediment
64	Northwest Drain Mouth	0.09	NW	Sediment
65	Major Stream Mouth	0.18	W	Sediment
70	H&H Farm Stand	16.2	SSW	Food Products

(1) chronologically missing location numbers denote deleted or retired sampling locations.

(2) AIP = Air, Iodine and Particulate
Veg = Vegetation
TLD = Thermoluminescent Dosimeter

Figure 2: REMP Sampling Locations Within Two Miles of Plant Site

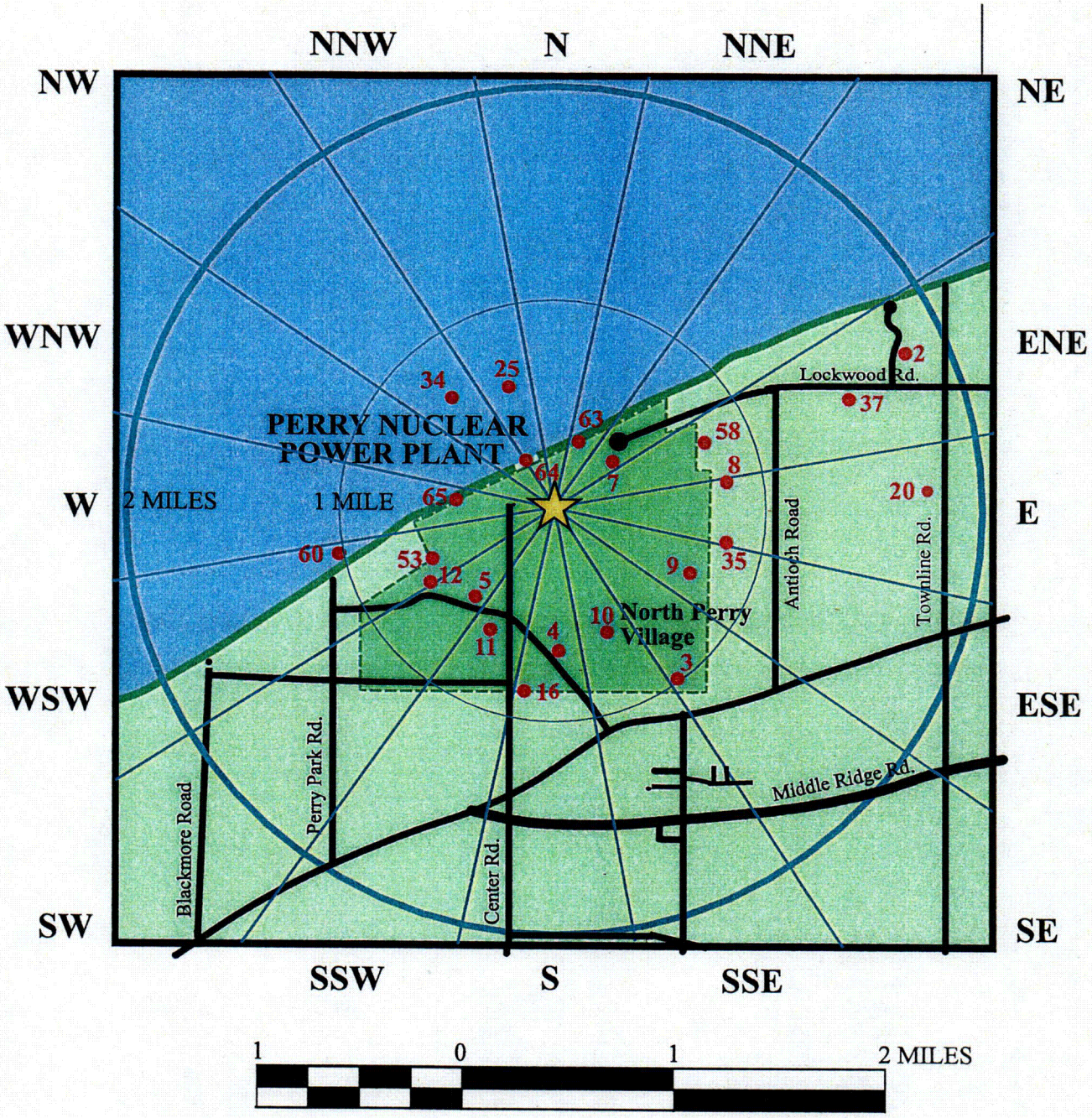

Figure 3: REMP Sampling Locations Between Two and Eight Miles of Plant Site

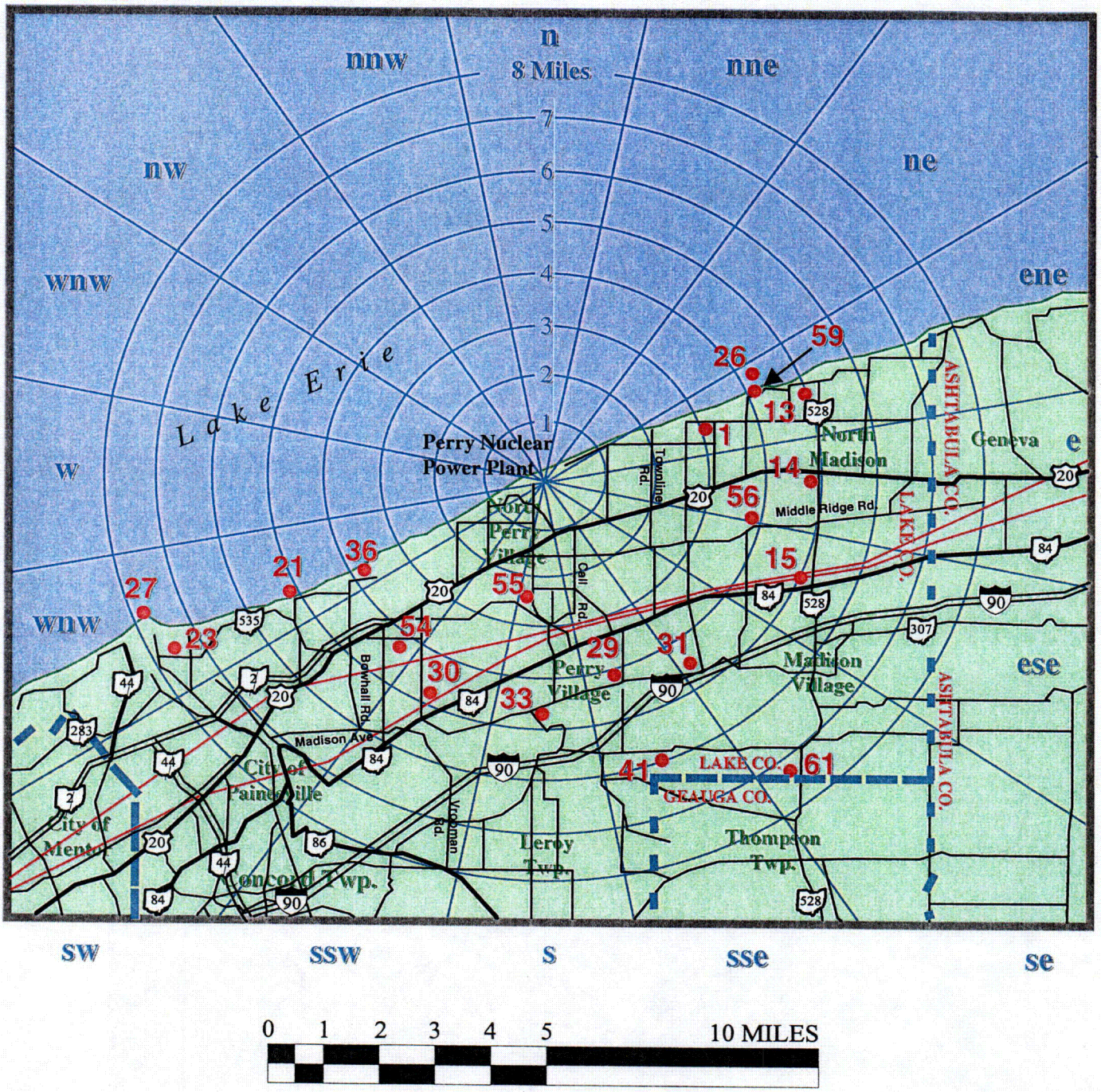

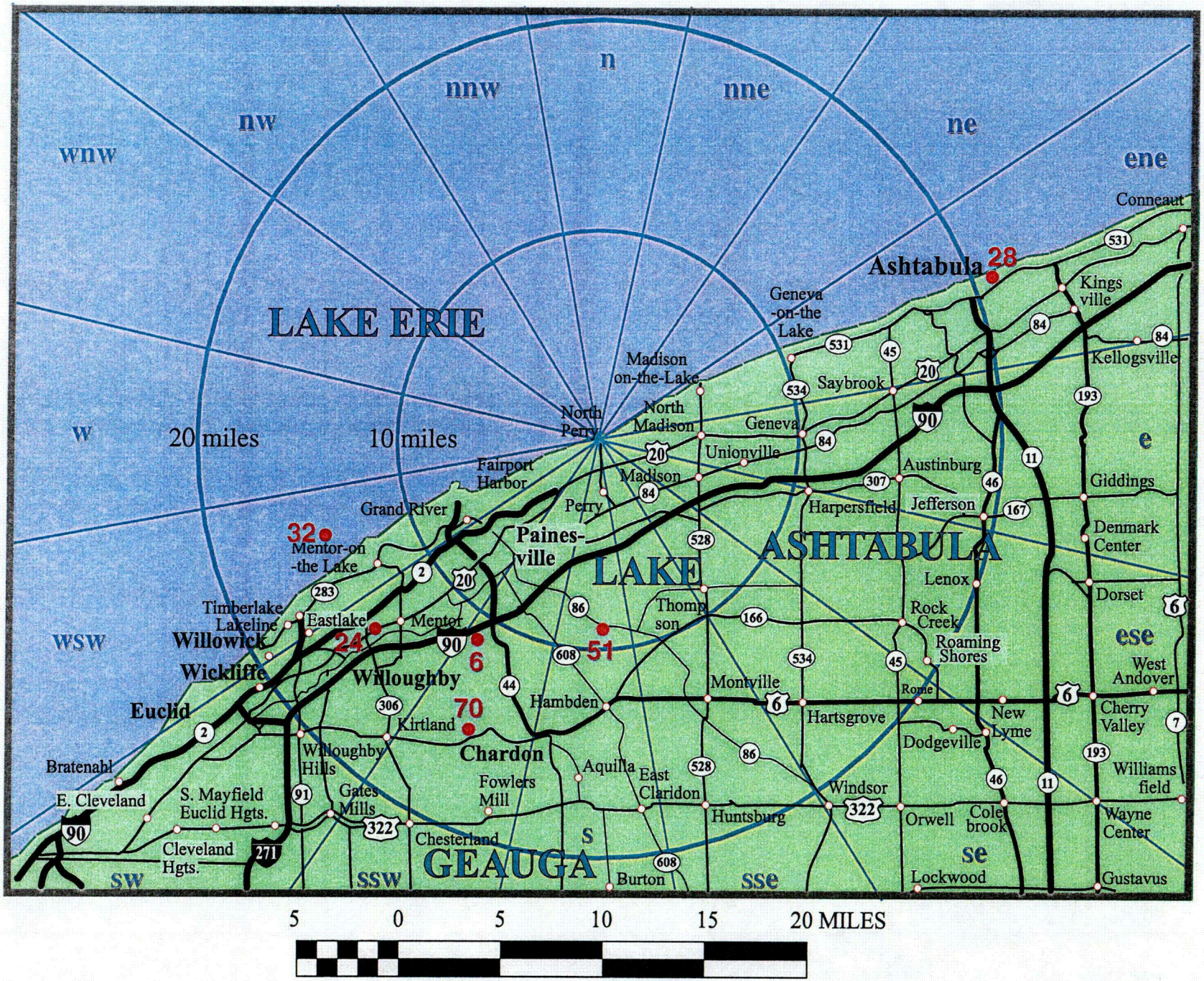

Figure 4: REMP Sampling Locations Greater Than Eight Miles from the Plant Site

SAMPLE ANALYSIS

When environmental samples are analyzed for radioactivity, several types of measurements are performed to provide information about the types of radiation and radionuclides present. The major analyses that are performed are discussed below.

Gross beta activity measures the total amount of beta-emitting radioactivity present in a sample, and acts as a tool to identify samples that may require further analysis. Beta radiation may be released by many different radionuclides. Since beta decay results in a continuous energy spectrum rather than the discrete energy levels, or "peaks", associated with gamma radiation, identification of specific beta-emitting nuclides is much more difficult. Therefore, gross beta activity only indicates whether the sample contains normal, or abnormal amounts of beta-emitting radioactivity; it does not specifically identify the radionuclides present.

Gamma spectral analysis provides more specific information than does the analysis for gross beta activity. Gamma spectral analysis identifies each radionuclide, and the amount of radioactivity, present in the sample emitting gamma radiation. Each radionuclide has a very specific "fingerprint" that allows for accurate identification and quantification.

Iodine activity analysis measures the amount of radioactive iodine present in a sample. Some media (for example, air sample charcoal cartridges) are analyzed directly by gamma spectral analysis. With other media (for example, milk), the radioiodines are extracted by chemical separation before being analyzed by gamma spectral analysis.

Tritium activity analysis measures the amount of the radionuclide tritium (H-3) present in a sample. Tritium is an isotope of hydrogen that emits low-energy beta particles. Tritium occurs naturally and is also man-made.

Gamma doses received by Thermoluminescent Dosimeters (TLD) while in the field are determined by a special laboratory procedure. Thermoluminescence is a process by which ionizing radiation interacts with the sensitive phosphor material in the TLD. Energy is trapped in the TLD material and can be stored for months or years. This capability provides an excellent method to measure the dose received over long periods of time. The amount of energy that was stored in the TLD as a result of interaction with radiation is released by a controlled heating process and measured in a calibrated reading system. As the TLD is heated, the phosphor releases the stored energy as light. The amount of light is directly proportional to the amount of radiation to which the TLD was exposed. The reading process also zeroes the TLD and prepares it for reuse. Table 14 provides a list of the analyses performed on environmental samples collected for the PNPP REMP in 2004.

Sample results are often reported as less than the lower limit of detection (< LLD), which is defined as the smallest amount of radioactive material that will show a positive result for which there can be confidence that radioactivity is present. This statistical parameter is used as a measure of the sensitivity of a sample analysis. When a measurement is reported as < LLD, it means that no radioactivity was detected at a value above, or equal to the appropriate ODCM table value. The NRC has established LLD values for REMP sample analyses. The vendor laboratory for REMP sample analyses complied with those values in 2004.

Table 14: REMP Sample Analyses

TYPE	SAMPLE	FREQUENCY	ANALYSIS
Atmospheric Monitoring	Airborne Particulates	Weekly, Quarterly	Gross Beta Activity Gamma Spectral Analysis
	Airborne Radioiodine	Weekly	Iodine-131
Terrestrial Monitoring	Milk	Bi-Monthly	Gamma Spectral Analysis Iodine-131
	Food Products	Monthly	Gamma Spectral Analysis
	Vegetation	As Required	Gamma Spectral Analysis
Aquatic Monitoring	Water	Monthly Quarterly	Gross Beta Activity, Gamma Spectral Analysis Tritium Activity
	Fish	Annually	Gamma Spectral Analysis
	Sediment	Biannually	Gamma Spectral Analysis
Direct Radiation Monitoring	TLD	Quarterly	Gamma Dose
		Annually	Gamma Dose

2004 SAMPLING PROGRAM

The contribution of radionuclides to the environment resulting from PNPP operation is assessed by comparing results from the 2004 program with pre-operational data (i.e., data from before 1986), operational data from previous years, and control location data. The results for each sample type are discussed below and compared to historical data to determine if there are any observable trends. All results are expressed as concentrations. Refer to Appendix B, 2004 REMP Data Summary Reports for a detailed listing of these results. The NRC requires special reporting whenever sample analysis results exceed set limits. No values exceeded these reporting levels in 2004.

Program Changes

There were no changes in 2004.

Missed Samples

On occasion, samples cannot be collected. This can be due to a variety of events, including equipment malfunction, animal husbandry practices, or lost shipments. Events may also occur which prevent a sample from being collected in the normal way, or prevent a complete sample from being collected. The drying period for goats is an annual occurrence, since unlike cows, goats cannot produce milk year-round. Food products are weather dependent and are susceptible to excessive spring rains or summer drought that can significantly impact the garden harvest. Shoreline lake water samples are collected by grab sample utilizing a container and scoop. During the winter months the shoreline can become inaccessible due to ice and snow buildup, preventing the safe collection of these samples. Shoreline sediment samples are collected with spoon and container. On occasion, the accessibility of these locations and sample collection may be impacted due to high lake levels, shifting lake bottom sand or erosion and shoreline collapse. Table 15 provides information on samples missed during 2004.

Table 15: Missed REMP Samples in 2004

MEDIA	LOCATION	DATE	REASON
Food Products	All	April, May, June 2004	Vegetables not ready for harvest
Food Products	20	July 2004	Vegetables not ready for harvest
Lake Water	59	January, February 2004	Sample unavailable due to frozen shoreline
Lake Water	60	January, February 2004	Sample unavailable due to frozen shoreline
Milk	61	January, February, March, April, October, November, December 2004	Drying period for goats
Sediment	64	May 2004	Shoreline inaccessible due to high water and collapsing bluff.

Atmospheric Monitoring

Air

Air sampling is conducted to detect any increase in the concentration of airborne radionuclides. The PNPP ODCM requires five locations (four indicator and one control). Air sampling pumps are used to draw continuous samples at a rate of approximately two cubic feet per minute. The air is drawn through glass fiber filters (to collect particulate material) and a charcoal cartridge (to adsorb iodine). The samples are collected on a weekly basis, 52 weeks a year, from each of seven air sampling stations. Six (6) of these locations are within four miles of the plant site; the seventh is used as a control location and is eleven miles from PNPP.

On occasion, air sample locations can experience power losses associated with storms and/or malfunctioning equipment. On 3/10/04 and 12/1/04 isolated power loss was experienced at locations 3, 4 and 5 due to localized storm activity. In both instances the power loss was short in duration and did not result in any missed samples.

Air samples are analyzed weekly for gross beta activity and radioiodine activity. The air samples are also analyzed by gamma spectral analysis quarterly. A total of 364 for air particulate and 364 air radioiodine samples were collected and analyzed in 2004.

Gross beta activity was detected in all air samples and ranged up to 0.04 pCi/m^3. The average gross beta activity at both indicator and control locations was 0.02 pCi/m^3 for 2004. Historically, the concentration of gross beta in air has been essentially identical at indicator and control locations. Figure 5 reflects the average gross beta activity for 2004 and the previous years.

Except for naturally occurring beryllium-7, no radionuclides were identified in the gamma spectral analysis above the LLD values. Iodine-131 was not detected in any sample above the LLD of 0.05 pCi/m^3.

Figure 5: Annual Average Gross Beta Activity, in Air

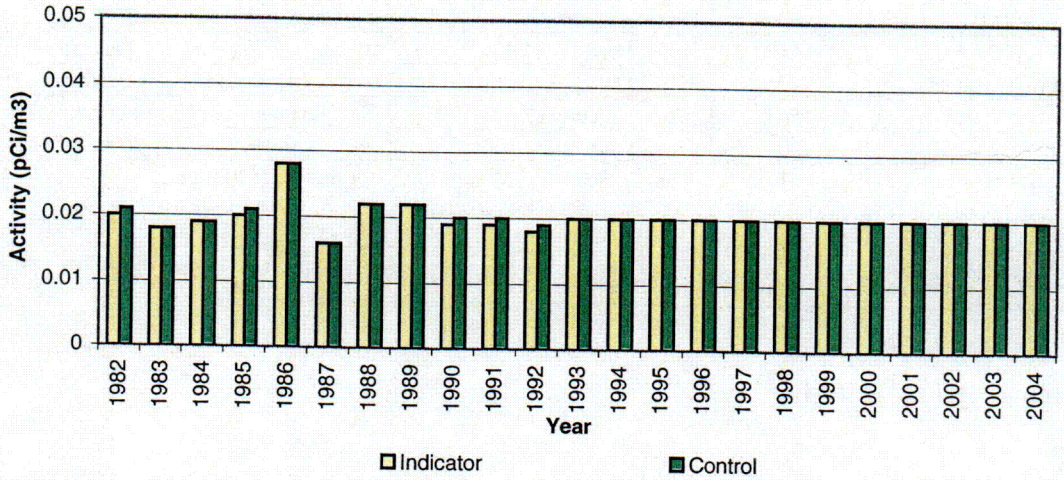

Terrestrial Monitoring

Collecting and analyzing samples of milk, food products and vegetation provides data to assess the build-up of radionuclides that may be ingested by humans. The historical data from soil and vegetation samples provides information on the atmospheric radionuclide deposition. The PNPP ODCM requires neither vegetation nor soil samples.

Milk

Samples of milk are collected once each month from November through March, and twice each month from April through October. Sampling is increased during the summer because animals usually feed outside on pasture and not on stored feed. Through July 2004 the PNPP REMP included two (2) milk locations located between 7.4 and 9.6 miles away from the plant. In August, a new milk location was added. Location #41 is located 5.8 miles SSE of the PNPP. Since the milk sampling locations do not meet the requirements of the ODCM (no milk-producing animals located within the required areas), food product sampling (discussed below) was performed. Milk is collected from the available locations, even though they do not meet the ODCM requirements. If new locations that meet the ODCM requirements are identified in the future, they will be added to the program.

Milk samples are analyzed by gamma spectral analysis for radioiodines and other radionuclides. A total of thirty five (35) milk samples were collected in 2004. Iodine was not detected above the LLD of 0.75 pCi/L in any of the samples. The concentrations of all radionuclides, except naturally occurring potassium-40, were below LLDs in all samples collected.

Food Products

Food products can provide a direct pathway to humans by ingestion. They can absorb radionuclides from atmospheric deposition on soil or from irrigation water drawn from a lake or pond receiving airborne or liquid effluents. Also, radionuclides in the soil may be absorbed by the roots of the plants and become incorporated into the edible portions. Because there is not a sufficient number of milk sampling locations, the PNPP REMP is required to include two food product indicator locations and one control location. Food products are collected monthly during the growing season from five gardens in the vicinity of PNPP. The control location for food products is 16.2 miles from PNPP.

A total of sixty eight (68) food product samples were collected and analyzed by gamma spectral analysis in 2004. Five (5) food products were collected which included: beet greens, collard greens,

turnip greens, chinese cabbage and swiss chard. Beryllium-7 and potassium-40, naturally-occurring radionuclides, were found in several samples, as expected. No other radionuclides were detected above the required LLDs.

Aquatic Monitoring

Radionuclides may be present in Lake Erie from many sources other than the PNPP. These sources include atmospheric deposition, run-off/soil erosion, and releases of radioactivity in liquid effluents from hospitals, universities or other industrial facilities. These sources provide two forms of potential radiation exposure, external and internal. External exposure can occur from contact with water or shoreline sediments, while internal exposure can occur from either direct ingestion of radionuclides or the transfer of radionuclides through the aquatic food chain. Direct ingestion can occur from drinking the water, while the transfer via the aquatic food chain occurs from the eventual consumption of aquatic organisms, such as fish. To monitor these pathways, PNPP samples water, shoreline sediments, and fish.

Water

Water is sampled from five locations along Lake Erie in the vicinity of the PNPP as required by the PNPP ODCM. Samples from three locations are collected using composite sample pumps. The pumps are designed to collect water at regular intervals and composite it in a sample container. The containers are emptied monthly and the samples shipped to the laboratory for analysis. Samples from two locations are collected weekly and combined. Each month the combined samples for each location are shipped for analysis.

Fifty-six (56) water samples were collected and analyzed for gross beta activity and gamma spectral analysis in 2004. From these monthly samples, a quarterly composite sample was obtained and analyzed for tritium activity. Refer to Table 15 for an explanation of missed samples.

Gross beta activity was detected in one (1) of the fifty-six (56) samples collected. For 2004, the detectable gross beta activity was 3.09 pCi/L vs. the lab LLD value of 3.00 pCi/L. Refer to Figure 6 for the annual average gross beta activity for both indicator and control locations. The significant difference between the pre-1988 data and post-1988 data has been attributed to a change in vendor laboratories in 1987/1988. A comprehensive explanation for the observed difference is provided in the 1988 Annual Environmental Operating Report.

Figure 6: Annual Average Gross Beta Activity, in Water

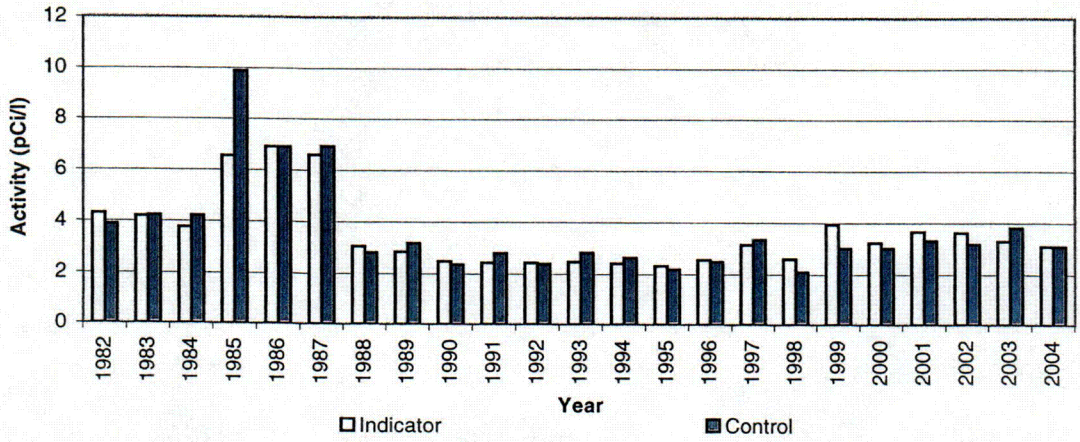

There were no radionuclides detected by gamma spectral analysis above the LLD. Tritium was not detected above the LLD value in any of the twenty (20) samples analyzed. These results are well within the range of those measured in previous years, which have ranged from below the LLD to 2,200 pCi/L.

Sediment

Sampling lake bottom sediments can provide an indication of the accumulation of particulate radionuclides which may lead to internal exposure to humans through the ingestion of fish, the re-suspension into drinking water, or as an external radiation source to fishermen and swimmers from shoreline exposure. Although the PNPP ODCM requires only one location, sediment is sampled twice each year from seven (7) locations. Two (2) of the sampling locations are also fish sampling locations. Sediment samples from offshore are collected using a hand dredge. Shoreline samples are collected using a scoop. Thirteen (13) sediment samples were collected in 2004 and analyzed by gamma spectrometry.

The predominant radionuclide detected by gamma spectral analysis was naturally-occurring potassium-40. Potassium-40 has been detected in all samples, since the program began in 1981.

Cesium-137 activity was detected in six (6) of the thirteen (13) samples collected and ranged from 138.40 pCi/kg to 900.78 pCi/kg. The annual average cesium-137 activity was 278.91 pCi/kg at the indicator locations and 898.41 pCi/kg at the control location. The average cesium-137 radioactivity for all locations was 485.41 pCi/kg and is within the maximum value of 864 pCi/kg established in 1981. Year-to-year variations in lake bottom sediment sample activitiy is expected and beyond the control of PNPP. For example, cesium-137 activity variations (refer to Figure 7) in the control locations from year-to-year may be contributed to:

1. The movement of sediment on the lake bottom due to wave action and currents, and
2. Sampling in nearly the same location approximately 4½ miles off-shore, even with GPS, is extremely difficult.

Figure 7: Annual Average Cesium-137 Concentration in Sediment

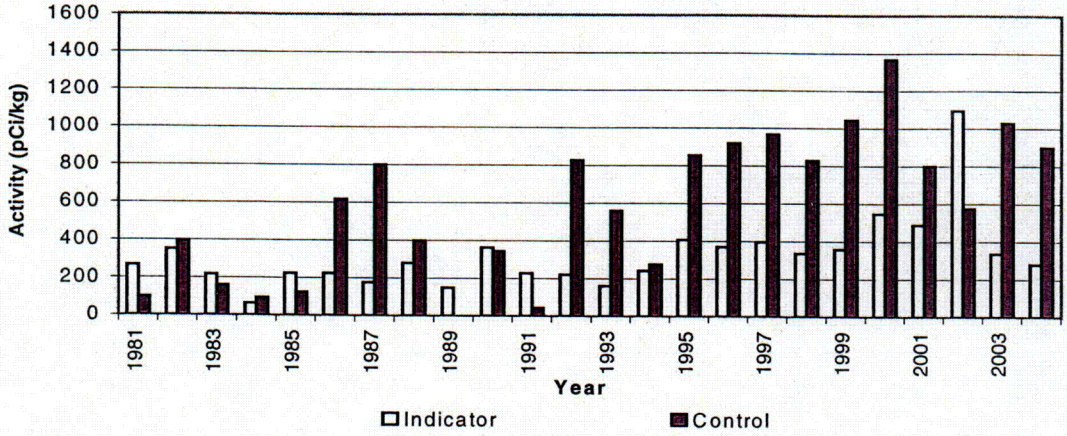

In 1999, a sediment sample from location #64 (shoreline discharge point of the northwest drain impoundment) was found to contain trace levels of cobalt-60. Ten (10) additional sample locations were established upstream from location #64 and within the impoundment to identify the boundary of the cobalt-60 activity and to support supplemental monitoring activities. For 2004, sample results for cobalt-60 confirm that no activity was identified at the discharge point (Location #64), and continues to remain within the northwest drain impoundment with activity ranging from <6.6 pCi/kg to 252 +/- 28 pCi/kg (Refer to Table 16). Also for comparison, cesium-137 activity within the impoundment is reflected in Table 17.

Table 16: Northwest Drain Impoundment Cobalt-60 Activity, pCi/kg (dry)

Location	05/18/04	05/19/04	09/21/04	10/01/04
64	*		<13.8	
64-1		<6.6		<26.6
64-2		<4.8		<21.8
64-3		238+/-40		<16.0
64-4		*		<30.7
64-5		*		*
64-6		93+/-34		<25.4
64-7		127+/-28		139+/-38
64-8		101+/-20		<21.2
64-9		116+/-22		95+/-37
64-10		129+/-24		252+/-28

* *No sample available or insufficient sample for analysis*

Table 17: Northwest Drain Impoundment Cesium-137 Activity, pCi/kg (dry)

Location	05/18/04	05/19/04	09/21/04	10/01/04
64	*		<10.9	
64-1		34+/-10		248+/-22
64-2		284+/-19		538+/-28
64-3		3320+/-112		251+/-19
64-4		*		<22.7
64-5		*		*
64-6		456+/-52		412+/-45
64-7		891+/-57		689+/-66
64-8		1426+/-46		793+/-58
64-9		759+/-42		1227+/-61
64-10		613+/-39		2525+/-64

** No sample available or insufficient sample for analysis*

Fish

Fish are analyzed primarily to quantify the dietary radionuclide intake by humans, and secondarily to serve as indicators of radioactivity in the aquatic ecosystem. Fish are collected from two locations, annually during the fishing season as required by the ODCM. An important sport or commercial species is targeted, and only the fillets are sent to the laboratory for analysis. In 2004, fish sampling was performed for PNPP by a local licensed sport fisherman.

Two (2) fish samples representing yellow perch were collected and analyzed by gamma spectral analysis in 2004. As expected, naturally occurring potassium-40 was found in all samples. No other radionuclides were detected above the LLD.

Direct Radiation Monitoring

Thermoluminscent Dosimeter (TLD)

Environmental radiation is measured directly at twenty-eight locations around the PNPP site, two of which are control locations. The locations are positioned in two rings around the plant as well as at the site boundary. The inner ring is within a one-mile radius of the plant site; the outer ring is four to five miles from the plant. The control locations are over ten miles from the plant in the two least prevalent wind directions. Each location is equipped with three TLDs, two of which are changed quarterly and one is changed annually.

A total of 252 TLDs were collected and analyzed in 2004. This includes 224 collected on a quarterly basis and twenty-eight (28) collected annually. Annual TLDs are not required per the ODCM and are used for supplemental data only.

For 2004, the annual average dose for all indicator locations was 63.89 mrem, and 61.18 mrem for the control locations. The indicator annual dose is believed to be influenced by location #36 (Figure 3) which has been consistently higher in dose than TLDs positioned closer to the plant (Figure 2). Referring to Figure 8, the average quarterly dose for all indicator locations was 16.20 mrem, and 15.82 mrem for all control locations. Please refer to Appendix B, 2004 REMP Detailed Data Report for all TLD results. Prior to 1988, the TLD results were higher due to a change in the vendor laboratory services. A comprehensive explanation of this difference was provided in the 1988 Annual Environmental Operating Report.

Figure 8: Average Quarterly TLD Dose

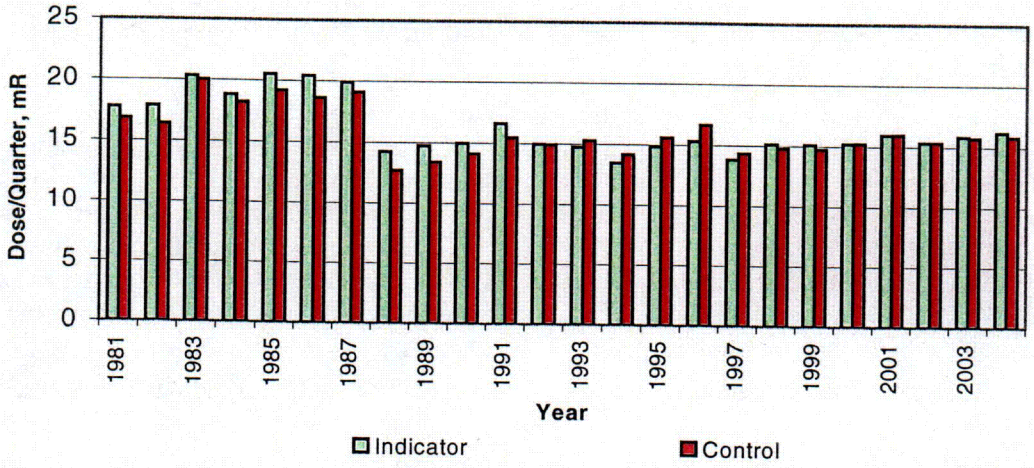

Conclusion

Sediment samples continue to confirm cobalt-60 in the northwest drain impoundment. The activity level was just above the detection limits. Additional monitoring is being performed to monitor this location. An environmental evaluation determined that there would be less impact upon the environment by leaving this material in place. Atmospheric monitoring results were consistent with past results. The prevalent radionuclide in air was beryllium-7, which is naturally occurring. Naturally occurring potassium-40 was detected in all terrestrial samples, as expected.

Finally, direct radiation measurements are consistent with past data.

INTER-LABORATORY CROSS-CHECK COMPARISON PROGRAM

Introduction

The purpose of the Inter-laboratory Cross-Check Comparison Program (ICCCP) is to provide an independent check on the vendor laboratory's analytical procedures. Samples with a known concentration of specific radionuclides are provided to the vendor laboratory. The vendor laboratory measures and reports the concentration of specified radionuclides. The known values are then compared to the vendor results. Results consistently outside established acceptance criteria indicate a need to check instruments or procedures. Regulatory Guide 4.15 specifically required that contractor laboratories that performed environmental measurement participate in the EPA's Environmental Radioactivity Laboratory Inter-Comparison Studies Program, or an equivalent program.

The EPA's program is not longer funded and no longer offered. The reason that the EPA program was referenced in the regulatory guide is that the EPA standards were traceable to National Bureau of Standards (now known as National Institute Standard Technology). In response to this problem, Teledyne (PNPP vendor lab) incorporated a program offered by Environmental Resource Associates (ERA Company), which covered the same analyses in the same matrix at the same frequency as the EPA program. The ERA Company has received NIST accreditation for its program, as an equivalent program. In addition to comparison cross checks performed with the ERA Company, the vendor laboratory routinely monitors the quality of their analyses by:

- Analyzing "spiked" samples (samples with a specific quantity of radioactive material present in them),
- Participating in the Department of Energy's Mixed Analyte Performance Program (MAPEP), and
- Participating in the Environmental Measurements Laboratory Quality Assessment Program (EML).

Conclusion

Appendix A, 2004 Inter-Laboratory Cross-Check Comparison Program Results, includes results from both the above referenced programs and the ERA Company cross-check program.

1) Results for the Inter-laboratory Comparison Cross-Check Program, Environmental Resource Associates (ERA), Table A-1, were found to be within their respective control limits.
2) The Vendor Laboratory's Cross-Check testing of Thermoluminescent Dosimetry, Table A-2 and Table A-3, In-House "Spike" Samples were also within their control limits.
3) In Table A-4, In-House "Blank" Samples, two (2) milk samples (SPMI-1686, 7419) analyzed for Sr-90 were found to be outside the program acceptance criteria. Low levels of Sr-90 remain in the environment and concentrations of (1-5 pCi/l) found in milk is not unusual.
4) Table A-5, In-House "Duplicate" Samples, were found to be within their acceptance criteria.
5) For the MAPEP Program Table A-6, three (3) soil samples (STAP-1022) and one (1) air sample (STAP-1024) were found to outside the expected control limits. The Tc-99 soil sample was believed to have incomplete dissolution of sample. A spiked soil sample was prepared and the results were found to be satisfactory. Two soil samples for U-233, 234 and 238 failed on the low side of the acceptance criteria. These were reanalyzed with the same results. The investigation proved inconclusive. The air filter sample for Cs-134 failed on the low side. The investigation determined the sample filter geometry (biased by –10%) was not in keeping with the laboratory's geometry standard.

6) In Table A-7, the Environmental Measurements Laboratory Quality Assessment Program (EML), one air filter sample (STAP-1013) for Cs-134 failed on the low side. The probable effect of summation peaks and sample filter geometry (biased by –10%) not in keeping with the laboratory's geometry standard was the cause of the error. All other analysis results performed under these programs were within the control limits established

LAND USE CENSUS

Introduction

Each year a land use census, which is required by Section 3/4.12.2 of the PNPP ODCM, is conducted to identify the locations of the nearest milk animal, garden (of greater than 500 square feet), and residence in each of the meteorological sectors that is over land. Information gathered during the Land Use Census is used for off-site dose assessment and to update sampling locations for the Radiological Environmental Monitoring Program. The census is conducted by traveling all roads within a five-mile radius of the plant site, and recording and mapping the location of the nearest resident, milk animal, and vegetable garden. The 2004 Land Use Census, which was conducted July 14th and 15th, provided the garden, residence and milk animal locations tabulated in Tables 18, 19 and 20 and depicted in Figure 9. Note that the W, WNW, NNW, NW, N, and NNE sectors extend over Lake Erie, and therefore, are not included in the survey.

Discussions and Results

In general, the predominant land use within the census area continues to be rural/agricultural. In recent years however, it has been noted that tracts of land once used for farming are now being developed as mini-industrial parks and residential housing tracts. This is reflected in the loss of available milking animals within a five mile radius of PNPP to support the Radiological Environmental Monitoring Program (REMP). The 2004 Land Use Survey used the 1999 survey map produced by the Commercial Survey Co. of Cleveland. GPS units are used for more accurate location identification.

Table 18 identifies the nearest residences, by sector, to the PNPP. The table is updated annually to reflect any changes identified during the annual Land Use Census. For 2004, there is one (1) change noted for the "nearest residence" in the ENE sector and a correction in distance for the SSW sector.

Table 18: Nearest Residence, By Sector

SECTOR	LOCATION ADDRESS	MILES FROM PNPP	X/Q VALUE, sec/m^3	MAP LOCATOR NUMBER
NE	4384 Lockwood	0.7	2.66E-06	1
ENE	4412 Lockwood	0.7	1.96E-06	2
E	2626 Antioch	1.1	6.77E-07	3
ESE	2750 Antioch	1.0	8.57E-07	4
SE	4537 North Ridge	1.3	3.44E-07	5
SSE	4247 Redmill Valley Rd.	1.1	5.52E-06	6
S	3119 Parmly	0.9	2.25E-06	7
SSW	3121 Center	1.0	9.49E-07	8
SW	3440 Clark	1.3	4.42E-07	9
WSW	3462 Parmly	1.1	8.67E-07	10

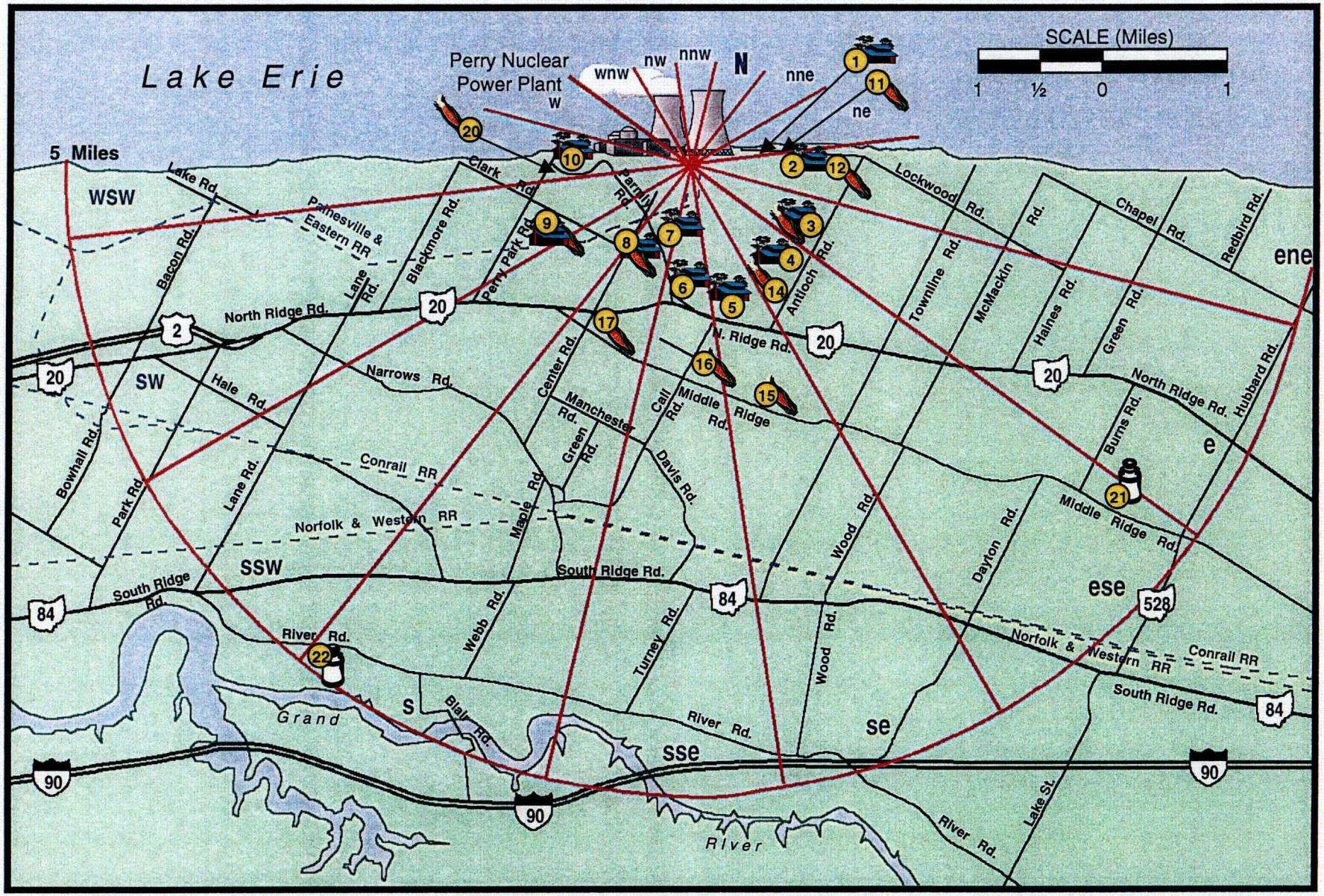

Figure 9: Land Use Census Map

Table 19 identifies the nearest milking animal by sector, to the PNPP. The owner of the milking animal identified in the S sector has historically refused to participate in the Perry REMP program. During the 2004 Land Use Census, two (2) changes were identified regarding the nearest milk animal. These changes include the loss of one location previously identified in the ESE sector and the addition of a new milk location identified in the same sector during this year's census. Presently, the animal is being kept as a pet and is not milking. The owner has indicated that they would join the REMP program if and when animal husbandry practices change.

Table 19: Nearest Milk Animal, By Sector

SECTOR	LOCATION ADDRESS	MILES FROM PNPP	MAP LOCATOR NUMBER
ESE	6401 Middle Ridge Rd.	4.4	21
S	3588 River	4.8	22

There were three (3) changes in the nearest gardens and one (1) correction in distance for the SSW recorded during this year's census. These changes include either the loss of the previous year's garden or the addition of a new garden identified in this year's census. Table 20 lists the nearest gardens occupying at least 500 square feet identified during the 2004 Land Use Census.

Table 20: Nearest Garden, By Sector

SECTOR	LOCATION ADDRESS	MILES FROM PNPP	D/Q VALUE, m^{-2}	MAP LOCATOR NUMBER
NE	2330 Lakehurst	0.9	8.91E-09	11
ENE	4630 Lockwood	1.1	4.77E-09	12
E	2626 Antioch	1.1	5.29E-09	3
ESE	2864 Antioch	1.1	3.96E-09	14
SE	5021 Middle Ridge	2.2	1.01E-09	15
SSE	3289 Call Rd.	1.5	2.04E-09	16
S	3964 North Ridge	1.4	2.73E-09	17
SSW	3121 Center	1.0	4.66E-09	8
SW	3440 Clark	1.3	1.95E-09	9
WSW	3422 Parmly Rd.	1.2	2.31E-09	20

CLAM/MUSSEL MONITORING

INTRODUCTION

Sampling for benthic macro-invertebrates (clams and mussels) has been conducted in Lake Erie in the vicinity of PNPP, since 1971. The clam/mussel program currently focuses on two species: *Corbicula fluminea* (Asiatic clam) and *Dreissena polymorpha* (zebra mussel).

CORBICULA PROGRAM

Monitoring specifically for Corbicula was initiated in response to a NRC bulletin and concerns of the Atomic Safety and Licensing Board. The 2004 monitoring was done as part of the Environmental Protection Plan (Operating License, Appendix B). The program consists of visually inspecting the raw water systems, whenever they are opened for maintenance. The purpose of this program is to detect Corbicula, should it appear at PNPP.

No Corbicula have ever been found in any sample collected from PNPP or from Lake Erie in the vicinity of PNPP. Two Corbicula were found in a sample collected from the Eastlake plant in June, 1987. No Corbicula have been found in any other sample collected since that time. A more detailed program history can be found in the 1986 and 1987 PNPP Annual Environmental Operating Reports.

Monitoring

In 2004, samples were collected from the Service Water (SW), Emergency Service Water (ESW), Fire Water, and Circulating Water (CW) systems at PNPP and examined for asiatic clam shells and fragments. All samples were either collected by Ponar hand dredge, hand scoop, or scraper. In addition to sample collections, plant components that use raw water are inspected whenever opened for maintenance or repair. Sample collection/inspection dates are listed in Table 21.

Table 21: 2004 Corbicula Monitoring

DATE	SAMPLE LOCATION	DATE	SAMPLE LOCATION
1/15/04	Nuclear Closed Cooling Heat Exchanger, 0P43B0001A	5/20/04	Turbine Building Closed Cooling Heat Exchanger, 1P44B0001B
2/12/04	Gravity Filter, 0P20D0002A	5/22/04	Emergency Service Water Pump, 1P45C0001A
2/13/04	Control Complex Deluge Station Intake Strainer, 0P54D00785	5/31/04	Emergency Service Water Pump, 1P45C0001B
2/20/04	Intermediate Building Deluge Supply Strainer, 0P54D00761	8/16/04	Fire Protection Piping at 1P54F0707
2/20/04	Off gas Building Exhaust Charcoal Filter Supply Strainer, 1P54D0707	9/11/04	Turbine Lube Oil Cooler, 1N34B0001A
2/23/04	Technical Support Center Filter Deluge Supply Strainer, 0P54D5095	9/22/04	Turbine Building Closed Cooling Heat Exchanger, 1P44B0001A
3/17/04	Turbine Bearing Spray Supply Strainer, 1P54D0990	11/24/04	Fire Protection Piping, 1P54
4/8/04	Unit 2 Deluge Station Strainer, 2P54D0706	12/10/04	2P54/Unit 2 Startup Transformer Fire Protection Deluge Piping
4/17/04	Nuclear Closed Cooling Heat Exchanger Service Water Bypass Valve, 0P41F0400		

Conclusions

The sample collected in June, 1987, was the only indication of Corbicula in the vicinity of PNPP. Although the presence of Corbicula was detected at the Eastlake Power Plant, it has not been demonstrated that their presence has created any operational problems there, or at PNPP. As in the past, the 2004 monitoring program did not identify Corbicula in any sample collected.

Dreissena Program

Dreissena, or Zebra mussels were first discovered at PNPP in September, 1988. The initial collection of 19 mussels was made as part of the Corbicula monitoring program. The Dreissena monitoring program began in 1989, with monitoring and testing. The current control program was designed and implemented in 1990.

Monitoring

In addition to visually inspecting the plant's raw water systems when they are opened for maintenance or repair, monitoring methods include the use of commercial divers, side-stream monitors, and plankton nets. Commercial divers monitor mussel infestation during the inspection of forebays, basins, and the intake and discharge structures. Divers have also been used to take underwater videotapes of the water basins and intake tunnel. Side-stream monitors are flow-through containers that receive water diverted from plant systems, and are normally used in three in-plant locations during the mussel season. The side-stream monitors are fitted with slides and inspected for veliger settlement. In 2004, a plankton net was used on a limited basis to help trend veligers during the spawning season and samples from the side-stream monitors were filtered and evaluated.

Treatment

Chemicals used for mussel control in 2004 included chlorine and a commercial molluscicide. The chlorine is intermittently injected into the plant service water, emergency service water, and circulating water systems by metering sodium hypochlorite into each system's influent. Sodium bisulfite is added at the plant discharge structure for dechlorination prior to return into Lake Erie.

The use of a commercial molluscicide requires approval by the Ohio Environmental Protection Agency (OEPA). The chemical selected for use at the PNPP in 2004 was alkyl-dimethyl-benzyl-ammonium chloride. One treatment was applied on August 10th, 2004. The active ingredients were detoxified by adsorption onto bentonite clay, prior to discharge into Lake Erie.

Results

The effectiveness of the intermittent chlorination treatment has been determined in several ways. First, visual inspections of raw water system components are conducted when systems are open during maintenance or repair. In addition, settlement monitors were inspected for new settlement. No live settlement has been found in any plant component to date.

The effectiveness of the application of the commercial molluscicide was measured by observing mortality of mussels placed in a flow-through container placed in plant service water and subjected to the chemical treatment. The observed mortality rate in the flow-through container was 99%. To date, PNPP has had no major problems related to zebra mussels.

CONCLUSIONS

Perry Nuclear Power Plant has taken the approach that the best method for avoiding problems with zebra mussels is preventive treatment of plant water systems. The current program of monitoring and chemical treatment will be continued to minimize the possibility that PNPP will experience future problems due to zebra mussels.

HERBICIDE APPLICATIONS

Herbicides are used sparingly on the PNPP site. A request must be made to, and approved by the PNPP Chemistry Unit prior to spraying to ensure that only approved chemicals are used, and only in approved areas.

In 2004, two (2) general and one (1) specific herbicide requests were initiated for chemical applications. Each application was in compliance with the Ohio Environmental Protection Agency's rules and regulations. There were no adverse environmental impacts observed during weekly site environmental inspections as a result of these applications. The herbicides approved for use in the Owner-Controlled Area are Round-Up, Riverdale, Karmex, Peptoil and Glypro Plus. For each application, the type of weed to be treated dictated the herbicide and concentration to be used. Table 22 provides detailed documentation for each application in 2004. The quantity represents the amount of herbicide applied, after any dilution.

Table 22: 2004 Herbicide Applications

Application Date	Location	Amount (gal)	Chemical Name
05/04/04	Administration Building, Training Building, Warehouse, In-Processing Center, Procedures & Reproduction Building, plant beds, and parking lot	0.45	Roundup
05/06/04	Gravel area east of Procedures and Reproduction Building	1.17	Roundup
05/10/04	Parmly Road fence line	0.75	Roundup
5/11/04	Protected Area Transmission Yard	0.14	Roundup
5/17/04	Administration Building, Training Building, Warehouse, In-Processing Center, Procedures & Reproduction Building, plant beds, and Owner Controlled Area Roadways	1.17	Roundup
5/25/04	Protected Area Perimeter	7.81	Roundup
5/26/04	Protected Area Perimeter	4.69	Roundup
6/1/04	Warehouse, In-Processing Center, Procedures & Reproduction Building, and gravel area east of Procedures and Reproduction Building	4.69	Roundup
6/3/04	Fire Grounds, Administration Building, Training Building, Warehouse, In-Processing Center, and Procedures & Reproduction Building	2.34	Roundup
6/8/04	Perry Plant Family Center access road and parking lot	1.45	Roundup
6/14/04	All 4 quadrants of Protected Area, Administration Building, Training Building, Plant Beds	1.45	Roundup
6/15/04	All 4 quadrants of Protected Area and gravel areas on east side of plant	9.38	Roundup
6/16/04	Protected Area – Southeast and Southwest quadrants and Transformer Yard gravel areas	5.86	Roundup
6/16/04	Transmission Yard	12.25 (Krovar – 120 lbs.)	Oust, Razor, 2.4D-Amine, Krovar
6/16/04	All 4 quadrants of Protected Area and Transformer Yard gravel areas	7.03	Roundup
6/21/04	Administration Building, Training Building, Warehouse, In-Processing Center, Procedures & Reproduction Building, and Warehouse compound gravel areas	1.17	Roundup
6/22/04	Fire Training Grounds, Waste Accumulation Facility, and Transformer Yard gravel areas	2.34	Roundup
6/29/04	Rifle range and lagoon building	1.52	Roundup

Application Date	Location	Amount (gal)	Chemical Name
7/6/04	Administration Building, Training Building, Warehouse, In-Processing Center, Procedures & Reproduction Building Parking Lot, Contractor Parking Lot, Fire Training Grounds, plant beds, and Scaffolding Building gravel areas	3.52	Roundup
7/13/04	Administration Building, Training Building, Warehouse, In-Processing Center, Procedures & Reproduction Building, Contractor Parking Lot (West), and plant beds	1.17	Roundup
7/19/04	Administration Building, Training Building, Warehouse, In-Processing Center, Procedures & Reproduction Building, Contractor Parking Lot (West), Plant Beds, All 4 quadrants of Protected Area, Transformer Yard gravel areas	8.20	Roundup
7/29/04	Transmission Yard	12.25 (Krovar – 120 lbs)	Oust, Razor, 2.4D-Amine, Krovar
8/2/04	Along plant roadways	0.94	Roundup
8/16/04	Administration Building, Training Building, Warehouse, In-Processing Center, Procedures & Reproduction Building, along roadways, plant beds, and Meteorological Tower Area	4.69	Roundup
8/23/04	Along plant roadways, Parking lot plant beds	2.34	Roundup
8/31/04	Waste Accumulation Facility, Barrel Salvage Area	0.78	Roundup
9/14/04	Administration Building, Training Building, Vehicle Inspection Facility roadway	2.34	Roundup
9/17/04	Owner Controlled Area – eastside gravel areas	2.34	Roundup
9/28/04	Administration Building, Training Building, Warehouse, In-Processing Center, Procedures & Reproduction Building, along roadways, and plant beds adjacent to buildings	2.34	Roundup

SPECIAL REPORTS

NON-COMPLIANCES

NPDES Permit

The National Pollutant Discharge Elimination System (NPDES) permit is issued by the Ohio Environmental Protection Agency (OEPA). It establishes monitoring requirements and limits for discharges from the PNPP. It also specifies the locations from which the plant is allowed to discharge.

There were no NPDES non-compliance issues identified in 2004.

Environmental Protection Plan

The Environmental Protection Plan (EPP), which is a part of the PNPP Operating License, requires a non-radiological environmental monitoring and reporting program be established at the PNPP. There were no instances of an EPP non-compliance identified in 2004.

UNREVIEWED ENVIRONMENTAL QUESTIONS

All proposed changes to the PNPP design or operation, as well as tests or experiments, must be evaluated for potential environmental impacts in accordance with the EPP and administrative quality assurance procedures. In 2004, these reviews ensured that no changes to the facility or programs were performed, which could have resulted in an adverse environmental impact. Therefore, there were no potentially significant unreviewed environmental questions identified.

OHIO DEPARTMENT OF NATURAL RESOURCES SURVEY

On February 21, 2003, the Ohio Department of Natural Resources (ODNR), Division of Wildlife contacted Perry requesting permission to access areas where Spotted Turtles had been previously documented. Perry granted the ODNR representative access, and the environmental staff participated in the surveys of the area.

The summer 2003 survey did not result in the capture of any Spotted Turtles in the previously recorded area. The wet prairies and meadows along the powerline right-of-way have been overrun by *Phragmites sp.* reducing their suitability as Spotted Turtle habitat. (It is believed that this native plant has been hybridized with European *Phragmites sp.*, causing it to become more aggressive in many areas.) However, the discovery of an open canopy fen late in 2003 has renewed hopes that the Spotted Turtle may still be found on the property. This fen has yet to be substantially impacted by *Phragmites sp.* Other species observed during the 2003 survey included the Common Snapping Turtle (*Chelydra serpentina serpentina*), the Spotted Salamander (*Ambystoma maculatum*), Red-backed Salamander (*Plethodon cinereus*), and Western Chorus Frog (*Pseudacris triseriata triseriata*).

The ODNR representative plans on returning in 2005 to monitor this new habitat and complete the survey. Upon completion, Perry will be provided a copy of the survey.

APPENDIX A, 2004 INTER-LABORATORY CROSS CHECK COMPARISON PROGRAM RESULTS

Environmental, Inc.
Midwest Laboratory
an Allegheny Technologies Co.

700 Landwehr Road • Northbrook, IL 60062-2
(847) 564-0700 fax (847) 564-4517

APPENDIX A

INTERLABORATORY COMPARISON PROGRAM RESULTS

NOTE: Environmental Inc., Midwest Laboratory participates in Intercomparison studies administered by Environmental Resources Associates, and serves as a replacement for studies conducted previously by the U.S. EPA Environmental Monitoring Systems Laboratory, Las Vegas, Nevada. Results are reported in Appendix A. TLD Intercomparison results, in-house spikes, blanks, duplicates and mixed analyte performance evaluation program results are also reported. Appendix A is updated four times a year; the complete Appendix is included in March, June, September and December monthly progress reports only.

January through December, 2004

Appendix A

Interlaboratory Comparison Program Results

Environmental, Inc., Midwest Laboratory, formerly Teledyne Brown Engineering Environmental Services Midwest Laboratory has participated in interlaboratory comparison (crosscheck) programs since the formulation of it's quality control program in December 1971. These programs are operated by agencies which supply environmental type samples containing concentrations of radionuclides known to the issuing agency but not to participant laboratories. The purpose of such a program is to provide an independent check on a laboratory's analytical procedures and to alert it of any possible problems.

Participant laboratories measure the concentration of specified radionuclides and report them to the issuing agency. Several months later, the agency reports the known values to the participant laboratories and specifies control limits. Results consistently higher or lower than the known values or outside the control limits indicate a need to check the instruments or procedures used.

Results in Table A-1 were obtained through participation in the environmental sample crosscheck program administered by Environmental Resources Associates, serving as a replacement for studies conducted previously by the U.S. EPA Environmental Monitoring Systems Laboratory, Las Vegas, Nevada.

The results in Table A-2 list results for thermoluminescent dosimeters (TLDs), via International Intercomparison of Environmental Dosimeters, when available, and internal laboratory testing.

Table A-3 lists results of the analyses on in-house "spiked" samples for the past twelve months. All samples are prepared using NIST traceable sources. Data for previous years available upon request.

Table A-4 lists results of the analyses on in-house "blank" samples for the past twelve months. Data for previous years available upon request.

Table A-5 list results of the in-house "duplicate" program for the past twelve months. Acceptance is based on the difference of the results being less than the sum of the errors. Data for previous years available upon request.

The results in Table A-6 were obtained through participation in the Mixed Analyte Performance Evaluation Program.

The results in Table A-7 were obtained through participation in the Environmental Measurement Laboratory Quality Assessment Program.

Attachment A lists acceptance criteria for "spiked" samples.

Out-of-limit results are explained directly below the result.

TABLE A-1. Interlaboratory Comparison Crosscheck program, Environmental Resource Associates (ERA)[a].

Lab Code	Date	Analysis	Concentration (pCi/L) Laboratory Result[b]	ERA Result[c]	Control Limits
STW-1005	02/17/04	Sr-89	36.5 ± 6.5	44.9 ± 4.5	36.2 - 53.6
STW-1005	02/17/04	Sr-90	13.4 ± 0.8	11.6 ± 1.2	2.9 - 20.3
STW-1006	02/17/04	Ba-133	60.9 ± 2.8	63.2 ± 6.3	52.3 - 74.1
STW-1006	02/17/04	Co-60	95.2 ± 1.5	96.4 ± 9.6	87.7 - 105.0
STW-1006	02/17/04	Cs-134	71.2 ± 5.4	75.8 ± 7.6	67.1 - 84.5
STW-1006	02/17/04	Cs-137	157.0 ± 6.5	155.0 ± 15.5	142.0 - 168.0
STW-1006	02/17/04	Zn-65	103.0 ± 1.1	102.0 ± 10.2	84.4 - 120.0
STW-1007	02/17/04	Gr. Alpha	15.6 ± 1.2	16.6 ± 1.7	7.9 - 25.3
STW-1007	02/17/04	Gr. Beta	46.3 ± 4.4	41.5 ± 4.2	32.8 - 50.2
STW-1008	02/17/04	Ra-226	8.7 ± 0.2	9.3 ± 0.0	6.9 - 11.7
STW-1008	02/17/04	Ra-228	16.6 ± 0.4	18.2 ± 1.8	10.3 - 26.1
STW-1008	02/17/04	Uranium	34.2 ± 0.8	33.0 ± 3.3	27.8 - 38.2
STW-1015	05/18/04	Sr-89	39.7 ± 3.3	45.9 ± 5.0	37.2 - 54.6
STW-1015	05/18/04	Sr-90	12.4 ± 0.9	11.6 ± 5.0	2.9 - 20.3
STW-1016	05/18/04	Ba-133	96.9 ± 2.4	101.0 ± 10.1	83.5 - 118.0
STW-1016	05/18/04	Co-60	39.9 ± 0.5	41.6 ± 5.0	32.9 - 50.3
STW-1016	05/18/04	Cs-134	48.8 ± 0.8	50.5 ± 5.0	41.8 - 59.2
STW-1016	05/18/04	Cs-137	82.6 ± 2.3	82.5 ± 5.0	73.8 - 91.2
STW-1016	05/18/04	Zn-65	77.5 ± 1.5	75.2 ± 7.5	62.2 - 88.2
STW-1017	05/18/04	Gr. Alpha	32.4 ± 2.1	38.8 ± 9.7	22.0 - 55.6
STW-1017	05/18/04	Gr. Beta	63.4 ± 3.5	59.6 ± 10.0	42.3 - 76.9
STW-1018	05/18/04	I-131	25.2 ± 0.4	25.1 ± 3.0	19.9 - 30.3
STW-1019	05/18/04	Ra-226	16.0 ± 1.1	17.3 ± 2.6	12.8 - 21.8
STW-1019	05/18/04	Ra-228	12.6 ± 0.9	10.3 ± 2.6	5.8 - 14.8
STW-1019	05/18/04	Uranium	13.0 ± 0.0	12.7 ± 3.0	7.5 - 17.9
STW-1020	05/18/04	H-3	32043 ± 166	30900 ± 3090	25600 - 36200
STW-1028	08/17/04	Sr-89	16.1 ± 1.9	20.0 ± 2.0	11.3 - 28.7
STW-1028	08/17/04	Sr-90	13.4 ± 0.1	13.6 ± 1.4	4.9 - 22.3
STW-1029	08/17/04	Ba-133	30.2 ± 3.9	32.1 ± 3.2	23.4 - 40.8
STW-1029	08/17/04	Co-60	24.9 ± 1.9	24.0 ± 2.4	15.3 - 32.7
STW-1029	08/17/04	Cs-134	21.4 ± 3.4	21.6 ± 2.2	12.9 - 30.3
STW-1029	08/17/04	Cs-137	205.6 ± 4.3	193.0 ± 19.3	176.0 - 210.0
STW-1029	08/17/04	Zn-65	145.5 ± 3.0	143.0 ± 14.3	118.0 - 168.0
STW-1030	08/17/04	Gr. Alpha	47.7 ± 9.1	57.0 ± 5.7	32.3 - 81.7
STW-1030	08/17/04	Gr. Beta	28.1 ± 2.5	20.0 ± 2.0	11.3 - 28.7
STW-1030	08/17/04	Gr. Beta	28.1 ± 2.5	20.0 ± 2.0	11.3 - 28.7
STW-1031	08/17/04	Ra-226	6.9 ± 0.5	6.3 ± 0.6	4.6 - 7.9
STW-1031	08/17/04	Ra-228	13.1 ± 1.4	14.7 ± 1.5	8.3 - 21.1
STW-1031	08/17/04	Uranium	6.0 ± 0.1	6.2 ± 0.6	1.0 - 11.4

TABLE A-1. Interlaboratory Comparison Crosscheck program, Environmental Resource Associates (ERA)[a].

Lab Code	Date	Analysis	Concentration (pCi/L) Laboratory Result[b]	ERA Result[c]	Control Limits
STW-1037	11/15/04	Sr-89	42.2 ± 3.5	45.7 ± 5.0	37.0 - 51.5
STW-1037	11/15/04	Sr-90	37.3 ± 1.3	36.6 ± 5.0	27.9 - 45.3
STW-1038	11/15/04	Ba-133	75.5 ± 0.8	78.4 ± 7.8	64.8 - 92.0
STW-1038	11/15/04	Co-60	12.2 ± 0.7	11.7 ± 5.0	3.0 - 20.4
STW-1038	11/15/04	Cs-134	43.6 ± 0.5	42.9 ± 5.0	34.2 - 51.6
STW-1038	11/15/04	Cs-137	59.5 ± 2.9	60.1 ± 5.0	51.4 - 68.8
STW-1038	11/15/04	Zn-65	50.7 ± 3.2	50.9 ± 5.1	42.1 - 59.7
STW-1039	11/15/04	Gr. Alpha	23.9 ± 2.2	31.7 ± 7.9	18.0 - 45.4
STW-1039	11/15/04	Gr. Beta	35.8 ± 1.3	36.3 ± 5.0	27.6 - 45.0
STW-1040	11/15/04	I-131	22.4 ± 1.9	22.0 ± 5.0	16.9 - 27.3
STW-1041	11/15/04	Ra-226	9.8 ± 0.4	9.2 ± 1.4	6.8 - 11.6
STW-1041	11/15/04	Ra-228	8.6 ± 0.3	7.1 ± 1.8	7.0 - 10.2
STW-1041	11/15/04	Uranium	11.1 ± 0.3	11.4 ± 3.0	6.2 - 16.6
STW-1042	11/15/04	H-3	21218.0 ± 285.0	20700.0 ± 2070.0	17100.0 - 24300.0

[a] Results obtained by Environmental, Inc., Midwest Laboratory as a participant in the crosscheck program for proficiency testing in drinking water conducted by Environmental Resources Associates (ERA).

[b] Unless otherwise indicated, the laboratory result is given as the mean ± standard deviation for three determinations.

[c] Results are presented as the known values, expected laboratory precision (1 sigma, 1 determination) and control limits as provided by ERA.

Attachment A

ACCEPTANCE CRITERIA FOR "SPIKED" SAMPLES

LABORATORY PRECISION: ONE STANDARD DEVIATION VALUES FOR VARIOUS ANALYSES[a]

Analysis	Level	One standard deviation for single determination
Gamma Emitters	5 to 100 pCi/liter or kg	5.0 pCi/liter
	> 100 pCi/liter or kg	5% of known value
Strontium-89[b]	5 to 50 pCi/liter or kg	5.0 pCi/liter
	> 50 pCi/liter or kg	10% of known value
Strontium-90[b]	2 to 30 pCi/liter or kg	5.0 pCi/liter
	> 30 pCi/liter or kg	10% of known value
Potassium-40	≥0.1 g/liter or kg	5% of known value
Gross alpha	≤20 pCi/liter	5.0 pCi/liter
	> 20 pCi/liter	25% of known value
Gross beta	≤100 pCi/liter	5.0 pCi/liter
	> 100 pCi/liter	5% of known value
Tritium	≤4,000 pCi/liter	$\pm 1\sigma$ = (pCi/liter) = $169.85 \times (\text{known})^{0.0933}$
	> 4,000 pCi/liter	10% of known value
Radium-226,-228	≥0.1 pCi/liter	15% of known value
Plutonium	≥0.1 pCi/liter, gram, or sample	10% of known value
Iodine-131, Iodine-129[b]	≤55 pCi/liter	6.0 pCi/liter
	> 55 pCi/liter	10% of known value
Uranium-238, Nickel-63[b] Technetium-99[b]	≤35 pCi/liter	6.0 pCi/liter
	> 35 pCi/liter	15% of known value
Iron-55[b]	50 to 100 pCi/liter	10 pCi/liter
	> 100 pCi/liter	10% of known value
Others[b]	—	20% of known value

[a] From EPA publication, "Environmental Radioactivity Laboratory Intercomparison Studies Program, Fiscal Year, 1981-1982, EPA-600/4-81-004.

[b] Laboratory limit.

TABLE A-2. Crosscheck program results; Thermoluminescent Dosimetry, (TLDs).

Lab Code	TLD Type	Date	Description	mR Known Value	mR Lab Result ± 2 sigma	mR Control Limits
Environmental, Inc.						
2003-1	CaSO4: Dy Cards	8/8/2003	Reader 1, 120	4.69	4.74 ± 0.54	3.28 - 6.10
2003-1	CaSO4: Dy Cards	8/8/2003	Reader 1, 150	3.00	3.02 ± 0.20	2.10 - 3.90
2003-1	CaSO4: Dy Cards	8/8/2003	Reader 1, 180	2.08	1.89 ± 0.45	1.46 - 2.70
2003-1	CaSO4: Dy Cards	8/8/2003	Reader 1, 180	2.08	2.11 ± 0.22	1.46 - 2.70
2003-1	CaSO4: Dy Cards	8/8/2003	Reader 1, 30	75.00	84.40 ± 4.87	52.50 - 97.50
2003-1	CaSO4: Dy Cards	8/8/2003	Reader 1, 60	18.75	19.11 ± 1.86	13.13 - 24.38
2003-1	CaSO4: Dy Cards	8/8/2003	Reader 1, 60	18.75	22.82 ± 5.41	13.13 - 24.38
2003-1	CaSO4: Dy Cards	8/8/2003	Reader 1, 90	8.33	9.05 ± 1.17	5.83 - 10.83
2003-1	CaSO4: Dy Cards	8/8/2003	Reader 1, 90	8.33	7.60 ± 1.08	5.83 - 10.83
Environmental, Inc.						
2003-2	CaSO4: Dy Cards	1/12/2004	Reader 1, 30	61.96	73.50 ± 2.58	43.37 - 80.55
2003-2	CaSO4: Dy Cards	1/12/2004	Reader 1, 60	15.49	19.70 ± 0.51	10.84 - 20.14
2003-2	CaSO4: Dy Cards	1/12/2004	Reader 1, 60	15.49	16.93 ± 1.37	10.84 - 20.14
2003-2	CaSO4: Dy Cards	1/12/2004	Reader 1, 90	6.88	8.06 ± 0.60	4.82 - 8.94
2003-2	CaSO4: Dy Cards	1/12/2004	Reader 1, 90	6.88	6.64 ± 0.58	4.82 - 8.94
2003-2	CaSO4: Dy Cards	1/12/2004	Reader 1, 120	3.87	4.39 ± 0.17	2.71 - 5.03
2003-2	CaSO4: Dy Cards	1/12/2004	Reader 1, 150	2.48	2.34 ± 0.18	1.74 - 3.22
2003-2	CaSO4: Dy Cards	1/12/2004	Reader 1, 150	2.48	2.51 ± 0.16	1.74 - 3.22
2003-2	CaSO4: Dy Cards	1/12/2004	Reader 1, 180	1.72	2.01 ± 0.13	1.20 - 2.24
Environmental, Inc.						
2004-1	CaSO4: Dy Cards	7/12/2004	Reader 1, 30 cm	55.23	61.07 ± 4.38	38.66 - 71.80
2004-1	CaSO4: Dy Cards	7/12/2004	Reader 1, 30 cm	55.23	62.82 ± 1.75	38.66 - 71.80
2004-1	CaSO4: Dy Cards	7/12/2004	Reader 1, 60 cm	13.81	14.10 ± 0.56	9.67 - 17.95
2004-1	CaSO4: Dy Cards	7/12/2004	Reader 1, 60 cm	13.81	14.03 ± 0.48	9.67 - 17.95
2004-1	CaSO4: Dy Cards	7/12/2004	Reader 1, 90 cm	6.14	5.97 ± 0.21	4.30 - 7.98
2004-1	CaSO4: Dy Cards	7/12/2004	Reader 1, 90 cm	6.14	6.26 ± 0.14	4.30 - 7.98
2004-1	CaSO4: Dy Cards	7/12/2004	Reader 1, 120 cm	3.45	4.40 ± 0.63	2.42 - 4.49
2004-1	CaSO4: Dy Cards	7/12/2004	Reader 1, 150 cm	2.21	2.34 ± 0.12	1.55 - 2.87
2004-1	CaSO4: Dy Cards	7/12/2004	Reader 1, 180 cm	1.53	1.65 ± 0.02	1.07 - 1.99

TABLE A-3. In-House "Spike" Samples

Lab Code	Sample Type	Date	Analysis	Concentration (pCi/L)[a] Laboratory results 2s, n=1[b]	Known Activity	Control Limits[c]
SPVE-707	Vegetation	2/20/2004	I-131(G)	5.68 ± 0.15	4.93	2.96 - 6.90
SPCH-711	Charcoal	2/20/2004	I-131(G)	6.35 ± 0.11	6.94	0.00 - 16.94
SPW-721	water	2/20/2004	Ni-63	161.00 ± 13.20	169.00	101.40 - 236.60
SPAP-733	Air Filter	2/25/2004	Gr. Beta	1.39 ± 0.02	1.48	0.00 - 11.48
SPW-735	water	2/25/2004	Cs-134	41.59 ± 7.02	39.10	29.10 - 49.10
SPW-735	water	2/25/2004	Cs-137	64.11 ± 7.39	64.56	54.56 - 74.56
SPW-735	water	2/25/2004	I-131	36.55 ± 0.48	40.08	28.08 - 52.08
SPW-735	water	2/25/2004	I-131	41.97 ± 8.93	40.08	28.08 - 52.08
SPMI-737	Milk	2/25/2004	Cs-134	37.40 ± 5.40	39.10	29.10 - 49.10
SPMI-737	Milk	2/25/2004	Cs-137	69.13 ± 9.58	64.56	54.56 - 74.56
SPMI-737	Milk	2/25/2004	I-131	45.03 ± 0.53	40.08	28.08 - 52.08
SPMI-737	Milk	2/25/2004	I-131	44.43 ± 9.22	40.08	28.08 - 52.08
SPW-1109	water	3/18/2004	Fe-55	39.98 ± 1.72	39.98	23.99 - 55.97
SPW-1496	water	4/7/2004	H-3	80006.60 ± 776.00	83896.00	67116.80 - 100675.20
SPMI-1683	Milk	4/16/2004	Sr-90	42.80 ± 1.81	43.43	34.74 - 52.12
SPW-1683	water	4/16/2004	I-131	54.47 ± 0.73	66.60	53.28 - 79.92
SPW-1683	water	4/16/2004	I-131(G)	65.82 ± 8.86	66.60	56.60 - 76.60
SPMI-1685	Milk	4/16/2004	Cs-134	33.60 ± 4.24	37.29	27.29 - 47.29
SPMI-1685	Milk	4/16/2004	Cs-137	61.77 ± 7.59	64.36	54.36 - 74.36
SPMI-1685	Milk	4/16/2004	I-131	65.85 ± 0.79	66.60	53.28 - 79.92
SPMI-1685	Milk	4/16/2004	I-131(G)	75.56 ± 11.86	66.60	56.60 - 76.60
SPMI-1685	Milk	4/16/2004	Sr-90	42.56 ± 1.66	43.43	34.74 - 52.12
SPW-1686	water	4/16/2004	Cs-134	39.31 ± 4.35	37.29	27.29 - 47.29
SPW-1686	water	4/16/2004	Cs-137	67.73 ± 7.92	64.36	54.36 - 74.36
SPVE-1862	Vegetation	4/26/2004	I-131(G)	1.32 ± 0.03	1.12	0.67 - 1.57
SPCH-1886	Charcoal	4/26/2004	I-131(G)	2.90 ± 0.07	2.80	1.68 - 3.92
SPAP-1888	Air Filter	4/27/2004	Gr. Beta	1.35 ± 0.02	1.48	0.00 - 11.48
SPF-1917	Fish	4/29/2004	Cs-134	1.44 ± 0.04	1.47	0.88 - 2.06
SPF-1917	Fish	4/29/2004	Cs-137	1.33 ± 0.06	1.29	0.77 - 1.81
SPW-3151	water	6/24/2004	Fe-55	33.85 ± 1.61	37.32	22.39 - 52.25
SPW-4232	water	8/4/2004	H-3	80225.00 ± 785.00	82380.00	65904.00 - 98856.00
SPAP-4234	Air Filter	8/4/2004	Gr. Beta	1.63 ± 0.02	1.46	0.00 - 11.46
SPW-5712	water	10/6/2004	Cs-134	61.04 ± 2.51	63.61	53.61 - 73.61
SPW-5712	water	10/6/2004	Cs-137	62.01 ± 2.76	63.66	53.66 - 73.66
SPW-5712	water	10/6/2004	Sr-90	48.40 ± 2.00	42.94	34.35 - 51.53
SPMI-5714	Milk	10/6/2004	Sr-90	41.61 ± 1.57	42.94	34.35 - 51.53

TABLE A-3. In-House "Spike" Samples

Lab Code	Sample Type	Date	Analysis	Concentration (pCi/L) Laboratory results 2s, n=1[b]	Known Activity	Control Limits[c]
SPMI-7418	Milk	12/22/2004	Cs-134	59.09 ± 2.59	59.25	49.25 - 69.25
SPMI-7418	Milk	12/22/2004	Cs-137	65.45 ± 5.61	63.35	53.35 - 73.35
SPW-7420	water	12/22/2004	Cs-134	58.42 ± 1.99	59.25	49.25 - 69.25
SPW-7420	water	12/22/2004	Cs-137	64.26 ± 4.18	63.35	53.35 - 73.35
SPW-7420	water	12/22/2004	Sr-89	105.26 ± 4.21	103.47	82.78 - 124.16
SPW-7420	water	12/22/2004	Sr-90	48.24 ± 1.70	42.72	34.18 - 51.26
SPAP-7437	Air Filter	12/22/2004	Gr. Beta	1.65 ± 0.02	1.45	0.00 - 11.45
SPF-7524	Fish	12/29/2004	Cs-134	1.11 ± 0.03	1.27	0.76 - 1.78
SPF-7524	Fish	12/29/2004	Cs-137	1.21 ± 0.05	1.19	0.71 - 1.67
SPW-7526	water	12/29/2004	H-3	78615.70 ± 773.70	80543.00	64434.40 - 96651.60
SPW-7532	water	12/29/2004	Fe-55	30894.00 ± 1484.00	32752.00	26201.60 - 39302.40
SPW-7540	water	12/29/2004	Tc-99	30.28 ± 1.11	32.98	20.98 - 44.98

[a] Liquid sample results are reported in pCi/Liter, air filters (pCi/m3), charcoal (pCi/m^3), and solid samples (pCi/g).
[b] Results are based on single determinations.
[c] Control limits are based on Attachment A, Page A2 of this report.

NOTE: For fish, Jello is used for the Spike matrix. For Vegetation, cabbage is used for the Spike matrix.

TABLE A-4. In-House "Blank" Samples

Lab Code	Sample Type	Date	Analysis	Concentration (pCi/L)[a] Laboratory results (4.66σ) LLD	Activity[b]	Acceptance Criteria (4.66 σ)
SPCH-712	Charcoal	2/20/2004	I-131(G)	2.24		9.6
SPW-722	Water	2/20/2004	Ni-63	2.64	-0.78 ± 1.58	20
SPAP-734	Air Filter	2/25/2004	Gr. Beta	0.96	-1.02 ± 0.42	3.2
SPW-736	Water	2/25/2004	Cs-134	2.47		10
SPW-736	Water	2/25/2004	Cs-137	1.91		10
SPW-736	Water	2/25/2004	I-131	0.15	-0.031 ± 0.10	0.5
SPW-736	Water	2/25/2004	I-131(G)	3.24		20
SPMI-738	Milk	2/25/2004	Cs-134	2.54		10
SPMI-738	Milk	2/25/2004	Cs-137	5.34		10
SPMI-738	Milk	2/25/2004	I-131	0.16	-0.071 ± 0.10	0.5
SPMI-738	Milk	2/25/2004	I-131(G)	5.36		20
SPW-1110	Water	3/18/2004	Fe-55	772.70	168.4 ± 480.90	1000
SPW-1497	Water	4/7/2004	H-3	152.30	81.4 ± 79.40	200
SPW-1684	Water	4/16/2004	Cs-134	2.43		10
SPW-1684	Water	4/16/2004	Cs-137	2.53		10
SPW-1684	Water	4/16/2004	I-131	0.50	0.21 ± 0.26	0.5
SPW-1684	Water	4/16/2004	I-131(G)	4.49		20
SPW-1684	Water	4/16/2004	Sr-89	0.64	0.19 ± 0.52	5
SPW-1684	Water	4/16/2004	Sr-90	0.64	0.13 ± 0.31	1
SPMI-1686	Milk	4/16/2004	Cs-134	5.00		10
SPMI-1686	Milk	4/16/2004	Cs-137	4.16		10
SPMI-1686	Milk	4/16/2004	I-131	0.45	0.13 ± 0.24	0.5
SPMI-1686	Milk	4/16/2004	I-131(G)	6.53		20
SPMI-1686	Milk	4/16/2004	Sr-89	0.71	0.11 ± 0.70	5
SPMI-1686	Milk	4/16/2004	Sr-90	0.71	0.66 ± 0.40	1
SPVE-1863	Vegetation	4/26/2004	I-131(G)	3.55		20
SPCH-1887	Charcoal	4/26/2004	I-131(G)	7.04		9.6
SPAP-1889	Air Filter	4/27/2004	Gr. Beta	0.74	-0.96 ± 0.35	3.2
SPF-1918	Fish	4/29/2004	Cs-134	7.13		100
SPF-1918	Fish	4/29/2004	Cs-137	6.59		100
SPW-3152	Water	6/24/2004	Fe-55	790.30	-70.0 ± 474.50	1000
SPW-4233	Water	8/4/2004	H-3	154.23	102.67 ± 81.38	200
SPAP-4235	Air Filter	8/4/2004	Gr. Beta	0.96	-0.99 ± 0.38	3.2
SPW-5711	Water	10/6/2004	Co-60	4.26		10
SPW-5711	Water	10/6/2004	Cs-134	6.02		10
SPW-5711	Water	10/6/2004	Cs-137	5.28		10
SPW-5711	Water	10/6/2004	Sr-90	0.61	-0.13 ± 0.27	1

TABLE A-4. In-House "Blank" Samples

Lab Code	Sample Type	Date	Analysis	Concentration (pCi/L)[a] Laboratory results (4.66σ) LLD	Activity[b]	Acceptance Criteria (4.66 σ)
SPMI-5713	Milk	10/6/2004	Cs-134	4.60		10
SPMI-5713	Milk	10/6/2004	Cs-137	5.81		10
SPMI-5713	Milk	10/6/2004	I-131(G)	6.07		20
SPMI-5713	Milk	10/6/2004	Sr-90	0.68	1.4 ± 0.45	1
SPMI-7419	Milk	12/22/2004	Cs-134	8.66		10
SPMI-7419	Milk	12/22/2004	Cs-137	5.61		10
SPMI-7419	Milk	12/22/2004	Sr-90	0.82	1.67 ± 0.48	1
SPW-7421	Water	12/22/2004	Sr-89	1.21	0.58 ± 0.94	5
SPW-7421	Water	12/22/2004	Sr-90	0.82	0.26 ± 0.41	1
SPAP-7438	Air Filter	12/22/2004	Gr. Beta	0.93	-0.78 ± 0.40	3.2
SPF-7525	Fish	12/29/2004	Cs-134	8.27		100
SPF-7525	Fish	12/29/2004	Cs-137	10.60		100
SPW-7526	Water	12/29/2004	H-3	164.80	-47.0 ± 84.60	200
SPW-7533	Water	12/29/2004	Fe-55	753.00	118.6 ± 465.80	1000
SPW-7535	Water	12/29/2004	Ni-63	13.10	4.3 ± 8.10	20
SPW-7540	Water	12/29/2004	Tc-99	1.19	-0.036 ± 0.72	10

[a] Liquid sample results are reported in pCi/Liter, air filters(pCi/filter), charcoal (pCi/charcoal canister), and solid samples (pCi/g).
[b] Activity reported is a net activity result. For gamma spectroscopic analysis, activity detected below the LLD value is not reporte
[c] I-131(G); iodine-131 as analyzed by gamma spectroscopy.
[d] Low levels of Sr-90 are still detected in the environment. A concentration of (1-5 pCi/L) in milk is not unusual.

TABLE A-5. In-House "Duplicate" Samples

Lab Code	Date	Analysis	Concentration (pCi/L)[a] First Result	Second Result	Averaged Result
E-30, 31	1/5/2004	Gr. Beta	1.27 ± 0.06	1.26 ± 0.05	1.27 ± 0.04
E-30, 31	1/5/2004	K-40	1.33 ± 0.21	1.11 ± 0.20	1.22 ± 0.15
WW-58, 59	1/5/2004	Gr. Beta	4.20 ± 1.33	4.46 ± 1.34	4.33 ± 0.94
WW-58, 59	1/5/2004	K-40	2.30 ± 0.23	2.70 ± 0.27	2.50 ± 0.18
TD-7889, 7890	1/5/2004	H-3	16582.00 ± 366.00	16060.00 ± 360.00	16321.00 ± 256.69
MI-79, 80	1/7/2004	K-40	1451.50 ± 125.90	1383.60 ± 115.50	1417.55 ± 85.43
MI-79, 80	1/7/2004	Sr-90	0.90 ± 0.31	1.05 ± 0.34	0.97 ± 0.23
S-100, 101	1/13/2004	Cs-137	8.50 ± 0.23	8.52 ± 0.21	8.51 ± 0.16
SW-225, 226	1/13/2004	Gr. Alpha	2.62 ± 1.26	2.05 ± 1.16	2.34 ± 0.86
SW-225, 226	1/13/2004	Gr. Beta	6.37 ± 1.15	4.92 ± 1.06	5.65 ± 0.78
U-304, 305	1/16/2004	Gr. Beta	5.18 ± 1.38	7.04 ± 1.53	6.11 ± 1.03
SW-345, 346	1/27/2004	I-131	1.32 ± 0.24	1.56 ± 0.21	1.44 ± 0.16
SWT-423, 424	1/27/2004	Gr. Beta	2.34 ± 0.54	2.38 ± 0.52	2.36 ± 0.38
SWU-469, 470	1/27/2004	Gr. Beta	2.99 ± 0.57	3.09 ± 0.67	3.04 ± 0.44
TD-545, 546	2/2/2004	H-3	658.40 ± 104.60	712.30 ± 106.60	685.35 ± 74.67
MI-524, 525	2/4/2004	K-40	1240.00 ± 147.90	1265.60 ± 166.30	1252.80 ± 111.28
MI-567, 568	2/9/2004	K-40	1322.90 ± 105.50	1340.80 ± 112.80	1331.85 ± 77.22
MI-567, 568	2/9/2004	Sr-90	0.98 ± 0.48	0.79 ± 0.42	0.89 ± 0.32
MI-588, 589	2/11/2004	K-40	1185.70 ± 157.80	1337.70 ± 160.00	1261.70 ± 112.36
SWU-778, 779	2/24/2004	Gr. Beta	2.55 ± 0.54	2.53 ± 0.56	2.54 ± 0.39
LW-1014, 1015	3/1/2004	Gr. Beta	1.78 ± 0.56	2.06 ± 0.57	1.92 ± 0.40
SW-966, 967	3/9/2004	Gr. Alpha	2.70 ± 1.43	2.96 ± 1.63	2.83 ± 1.08
SW-966, 967	3/9/2004	Gr. Beta	8.06 ± 1.20	7.33 ± 1.21	7.69 ± 0.85
SW-966, 967	3/9/2004	H-3	182.04 ± 86.24	198.87 ± 86.97	190.45 ± 61.24
SW-1249, 1250	3/31/2004	Gr. Beta	4.71 ± 1.11	5.25 ± 1.10	4.98 ± 0.78
LW-1464, 1465	3/31/2004	Gr. Beta	2.13 ± 0.52	2.39 ± 0.53	2.26 ± 0.37
AP-1633, 1634	3/31/2004	Be-7	0.05 ± 0.02	0.05 ± 0.02	0.05 ± 0.01
AP-1714, 1715	3/31/2004	Be-7	0.04 ± 0.01	0.05 ± 0.01	0.05 ± 0.01
TD-1489, 1490	4/1/2004	H-3	681.00 ± 110.00	709.00 ± 111.00	695.00 ± 78.14
SWT-1299, 1300	4/2/2004	Gr. Beta	3.13 ± 0.57	3.64 ± 0.60	3.39 ± 0.41
DW-1420, 1421	4/2/2004	Gr. Beta	1.29 ± 0.83	1.62 ± 0.87	1.46 ± 0.60
DW-1510, 1511	4/2/2004	I-131	0.68 ± 0.27	0.62 ± 0.36	0.65 ± 0.23
BS-1537, 1538	4/6/2004	Gr. Beta	6.81 ± 1.20	6.76 ± 1.23	6.78 ± 0.86
WW-1654, 1655	4/13/2004	Gr. Beta	6.83 ± 1.17	5.60 ± 1.12	6.21 ± 0.81
LW-1680, 1681	4/13/2004	Gr. Beta	2.45 ± 0.64	2.93 ± 0.62	2.69 ± 0.45
MI-1735, 1736	4/14/2004	K-40	1384.90 ± 182.00	1408.20 ± 187.90	1396.55 ± 130.80
MI-1802, 1803	4/19/2004	K-40	1327.50 ± 109.10	1206.30 ± 113.30	1266.90 ± 78.64
MI-1802, 1803	4/19/2004	Sr-90	0.72 ± 0.40	0.77 ± 0.41	0.74 ± 0.28
U-1781, 1782	4/21/2004	Gr. Alpha	0.20 ± 1.90	-0.30 ± 2.40	-0.05 ± 1.53
SWT-1933, 1934	4/27/2004	Gr. Beta	2.60 ± 0.55	2.33 ± 0.52	2.46 ± 0.38
F-1912, 1913	4/29/2004	H-3	8875.00 ± 250.00	9119.00 ± 253.00	8997.00 ± 177.84
F-1912, 1913	4/29/2004	K-40	3406.90 ± 533.30	3550.60 ± 581.40	3478.75 ± 394.47
LW-1960, 1961	4/29/2004	Gr. Beta	2.23 ± 0.55	2.38 ± 0.57	2.31 ± 0.40

TABLE A-5. In-House "Duplicate" Samples

Concentration (pCi/L)[a]

Lab Code	Date	Analysis	First Result	Second Result	Averaged Result
BS-2083, 2084	5/3/2004	Be-7	1.10 ± 0.44	1.17 ± 0.20	1.14 ± 0.24
BS-2083, 2084	5/3/2004	Gr. Beta	28.44 ± 2.27	25.56 ± 2.04	27.00 ± 1.53
BS-2083, 2084	5/3/2004	K-40	6.75 ± 0.89	6.35 ± 0.53	6.55 ± 0.52
BS-2083, 2084	5/3/2004	Sr-90	0.12 ± 0.04	0.17 ± 0.05	0.15 ± 0.03
MI-2225, 2226	5/11/2004	K-40	1396.30 ± 124.20	1227.60 ± 125.40	1311.95 ± 88.25
SW-2267, 2268	5/11/2004	Gr. Alpha	2.95 ± 1.44	2.41 ± 1.37	2.68 ± 0.99
SW-2267, 2268	5/11/2004	Gr. Beta	6.80 ± 1.18	7.25 ± 1.21	7.03 ± 0.84
MI-2437, 2438	5/17/2004	K-40	1549.00 ± 123.40	1566.20 ± 118.60	1557.60 ± 85.58
MI-2437, 2438	5/17/2004	Sr-90	1.83 ± 0.44	1.99 ± 0.42	1.91 ± 0.30
F-2413, 2414	5/20/2004	K-40	2844.60 ± 550.40	2963.00 ± 532.30	2903.80 ± 382.85
SO-2578, 2579	5/26/2004	Cs-137	0.16 ± 0.02	0.21 ± 0.05	0.18 ± 0.03
SO-2578, 2579	5/26/2004	Gr. Beta	28.07 ± 3.24	28.73 ± 3.00	28.40 ± 2.21
SO-2578, 2579	5/26/2004	K-40	19.41 ± 0.78	18.93 ± 1.04	19.17 ± 0.65
SS-2603, 2604	5/26/2004	Cs-137	0.06 ± 0.02	0.06 ± 0.02	0.06 ± 0.02
SS-2603, 2604	5/26/2004	K-40	10.18 ± 0.63	10.43 ± 0.56	10.30 ± 0.42
G-2677, 2678	6/1/2004	Be-7	1.31 ± 0.25	1.25 ± 0.23	1.28 ± 0.17
G-2677, 2678	6/1/2004	Gr. Beta	5.73 ± 0.12	5.86 ± 0.12	5.79 ± 0.09
G-2677, 2678	6/1/2004	K-40	5.56 ± 0.49	5.78 ± 0.50	5.67 ± 0.35
G-2677, 2678	6/1/2004	Sr-90	0.01 ± 0.00	0.01 ± 0.01	0.01 ± 0.00
DW-2700, 2701	6/1/2004	Gr. Beta	1.82 ± 1.01	2.66 ± 0.94	2.24 ± 0.69
TD-2876, 2877	6/1/2004	H-3	13116.00 ± 324.00	12746.00 ± 320.00	12931.00 ± 227.69
MI-2724, 2725	6/3/2004	K-40	1509.00 ± 116.10	1489.20 ± 126.10	1499.10 ± 85.70
MI-2724, 2725	6/3/2004	Sr-90	1.64 ± 0.46	1.81 ± 0.44	1.73 ± 0.32
BS-2921, 2922	6/3/2004	K-40	8.32 ± 0.63	8.55 ± 0.62	8.44 ± 0.44
TD-2876, 2877	6/4/2004	H-3	13116.00 ± 324.00	12746.00 ± 320.00	12931.00 ± 227.69
BS-2897, 2898	6/4/2004	Gr. Beta	9.31 ± 1.43	8.82 ± 1.39	9.06 ± 1.00
SWU-3092, 3093	6/9/2004	Gr. Beta	1.95 ± 0.71	2.55 ± 0.76	2.25 ± 0.52
CF-2986, 2987	6/14/2004	Be-7	0.69 ± 0.12	0.84 ± 0.19	0.76 ± 0.11
CF-2986, 2987	6/14/2004	K-40	4.50 ± 0.32	3.82 ± 0.48	4.16 ± 0.29
MI-2977, 2978	6/15/2004	K-40	1486.70 ± 120.10	1291.60 ± 167.40	1389.15 ± 103.01
MI-3007, 3008	6/15/2004	K-40	1333.90 ± 121.30	1355.80 ± 176.50	1344.85 ± 107.08
W-3031, 3032	6/18/2004	H-3	642.00 ± 108.00	562.00 ± 105.00	602.00 ± 75.31
W-3071, 3072	6/21/2004	H-3	273.00 ± 94.00	203.00 ± 92.00	238.00 ± 65.76
SW-3145, 3146°	6/22/2004	I-131	0.97 ± 0.20	1.43 ± 0.20	1.20 ± 0.14
DW-3278, 3279	6/25/2004	I-131	0.67 ± 0.26	0.48 ± 0.25	0.57 ± 0.18
AP-3922, 3923	6/28/2004	Be-7	0.08 ± 0.01	0.07 ± 0.01	0.07 ± 0.01
AP-3637, 3638	6/29/2004	Be-7	0.08 ± 0.01	0.07 ± 0.01	0.07 ± 0.01
LW-3589, 3590	6/30/2004	Gr. Alpha	0.28 ± 0.55	1.29 ± 0.89	0.79 ± 0.53
LW-3589, 3590	6/30/2004	Gr. Beta	1.91 ± 0.64	2.86 ± 0.70	2.39 ± 0.48
LW-3589, 3590	6/30/2004	H-3	8369.20 ± 262.57	8226.01 ± 260.51	8297.61 ± 184.94
AP-3943, 3944	6/30/2004	Be-7	0.08 ± 0.02	0.09 ± 0.02	0.08 ± 0.01

TABLE A-5. In-House "Duplicate" Samples

Lab Code	Date	Analysis	Concentration (pCi/L)[a] First Result	Second Result	Averaged Result
E-3327, 3328	7/1/2004	Gr. Beta	1.21 ± 0.06	1.35 ± 0.07	1.28 ± 0.05
E-3327, 3328	7/1/2004	K-40	1.08 ± 0.20	1.30 ± 0.22	1.19 ± 0.15
G-3377, 3378	7/1/2004	Be-7	1.10 ± 0.13	1.16 ± 0.16	1.13 ± 0.10
G-3377, 3378	7/1/2004	Gr. Beta	6.42 ± 0.19	6.28 ± 0.19	6.35 ± 0.13
G-3377, 3378	7/1/2004	K-40	5.26 ± 0.31	5.36 ± 0.28	5.31 ± 0.21
VE-3681, 3682	7/13/2004	K-40	2.65 ± 0.45	2.90 ± 0.61	2.77 ± 0.38
CF-3707, 3708	7/13/2004	Be-7	1.97 ± 0.44	2.11 ± 0.25	2.04 ± 0.25
CF-3707, 3708	7/13/2004	K-40	5.39 ± 0.44	4.98 ± 0.42	5.19 ± 0.30
SW-3773, 3774	7/14/2004	H-3	10697.20 ± 295.70	10689.60 ± 295.70	10693.40 ± 209.09
LW-3849, 3850	7/14/2004	Gr. Beta	2.21 ± 0.54	2.32 ± 0.65	2.27 ± 0.42
SWU-4307, 4308	7/14/2004	Gr. Beta	3.49 ± 0.57	3.68 ± 0.61	3.59 ± 0.42
MI-4051, 4052	7/28/2004	K-40	1190.70 ± 204.60	1357.00 ± 145.90	1273.85 ± 125.65
VE-4079, 4080	7/28/2004	K-40	4.90 ± 0.51	4.62 ± 0.61	4.76 ± 0.40
MI-4163, 4164	7/28/2004	K-40	1422.40 ± 186.50	1330.80 ± 181.00	1376.60 ± 129.95
MI-4163, 4164	7/28/2004	Sr-90	0.87 ± 0.32	1.00 ± 0.35	0.93 ± 0.24
WW-4387, 4388	8/3/2004	Gr. Beta	5.94 ± 0.76	6.28 ± 0.76	6.11 ± 0.54
MI-4286, 4287	8/4/2004	K-40	1435.20 ± 76.90	1404.70 ± 80.54	1419.95 ± 55.68
MI-4286, 4287	8/4/2004	Sr-90	1.88 ± 0.40	1.31 ± 0.35	1.59 ± 0.26
VE-4370, 4371	8/4/2004	H-3	0.54 ± 0.08	0.62 ± 0.08	0.58 ± 0.06
VE-4408, 4409	8/5/2004	K-40	2.03 ± 0.39	2.12 ± 0.32	2.08 ± 0.25
VE-4467, 4468	8/9/2004	K-40	6.28 ± 0.76	6.11 ± 0.75	6.20 ± 0.53
MI-4492, 4493	8/10/2004	K-40	1478.70 ± 116.70	1472.50 ± 105.10	1475.60 ± 78.53
MI-4492, 4493	8/10/2004	Sr-90	1.35 ± 0.40	1.08 ± 0.42	1.22 ± 0.29
MI-4518, 4519	8/11/2004	K-40	1197.30 ± 158.50	1350.20 ± 202.30	1273.75 ± 128.50
VE-4748, 4749	8/25/2004	Gr. Beta	2.31 ± 0.05	2.32 ± 0.05	2.31 ± 0.04
VE-4748, 4749	8/25/2004	K-40	1.70 ± 0.25	1.94 ± 0.31	1.82 ± 0.20
LW-4769, 4770	8/26/2004	Gr. Beta	2.00 ± 0.58	2.07 ± 0.58	2.04 ± 0.41
ME-4905, 4906	9/1/2004	Gr. Beta	3.06 ± 0.10	2.93 ± 0.10	3.00 ± 0.07
ME-4905, 4906	9/1/2004	K-40	2.33 ± 0.67	3.26 ± 0.58	2.80 ± 0.44
MI-4926, 4927	9/1/2004	K-40	1316.20 ± 115.40	1285.80 ± 117.30	1301.00 ± 82.27
MI-4926, 4927	9/1/2004	Sr-90	3.62 ± 0.52	2.07 ± 0.43	2.84 ± 0.34
VE-5027, 5028	9/2/2004	Gr. Beta	2.43 ± 0.07	2.39 ± 0.06	2.41 ± 0.05
VE-5027, 5028	9/2/2004	K-40	1.77 ± 0.20	1.94 ± 0.31	1.86 ± 0.18
SW-5003, 5004	9/7/2004	I-131	1.69 ± 0.23	1.50 ± 0.25	1.59 ± 0.17
MI-5050, 5051	9/7/2004	K-40	1559.40 ± 131.80	1560.70 ± 121.20	1560.05 ± 89.53
MI-5050, 5051	9/7/2004	Sr-90	2.26 ± 0.52	1.61 ± 0.47	1.94 ± 0.35
WW-5072, 5073	9/7/2004	Gr. Beta	4.31 ± 0.70	4.11 ± 0.69	4.21 ± 0.49
SW-5216, 5217	9/14/2004	Gr. Alpha	4.34 ± 1.71	4.30 ± 1.77	4.32 ± 1.23
SW-5216, 5217	9/14/2004	Gr. Beta	7.97 ± 1.24	8.58 ± 1.29	8.27 ± 0.89

TABLE A-5. In-House "Duplicate" Samples

Lab Code	Date	Analysis	Concentration (pCi/L)[a] First Result	Second Result	Averaged Result
G-5237, 5238	9/15/2004	Be-7	1.18 ± 0.23	1.28 ± 0.24	1.23 ± 0.17
G-5237, 5238	9/15/2004	K-40	7.16 ± 0.58	7.56 ± 0.55	7.36 ± 0.40
LW-5316, 5317	9/16/2004	Gr. Beta	2.76 ± 0.58	2.64 ± 0.54	2.70 ± 0.40
SS-5450, 5451	9/24/2004	K-40	10.33 ± 0.66	10.10 ± 0.74	10.22 ± 0.50
AP-6308, 6309	9/27/2004	Be-7	0.08 ± 0.01	0.08 ± 0.01	0.08 ± 0.01
SWU-5495, 5496	9/28/2004	Gr. Beta	3.38 ± 1.78	4.41 ± 1.94	3.90 ± 1.32
AP-6070, 6071	9/28/2004	Be-7	0.08 ± 0.01	0.08 ± 0.01	0.08 ± 0.01
G-5516, 5517	9/29/2004	Be-7	1.81 ± 0.29	1.74 ± 0.30	1.77 ± 0.21
G-5516, 5517	9/29/2004	K-40	7.35 ± 0.70	7.43 ± 0.62	7.39 ± 0.47
AP-6258, 6259	9/29/2004	Be-7	0.07 ± 0.01	0.07 ± 0.01	0.07 ± 0.01
F-7211, 7212	9/29/2004	Cs-137	0.04 ± 0.01	0.05 ± 0.02	0.05 ± 0.01
F-7211, 7212	9/29/2004	K-40	2.76 ± 0.27	3.07 ± 0.26	2.92 ± 0.19
BS-5902, 5903	10/1/2004	Co-60	0.25 ± 0.05	0.26 ± 0.03	0.25 ± 0.03
BS-5902, 5903	10/1/2004	Co-60	2.53 ± 0.11	2.52 ± 0.06	2.52 ± 0.06
E-5654, 5655	10/4/2004	Gr. Beta	1.40 ± 0.06	1.32 ± 0.06	1.36 ± 0.04
E-5654, 5655	10/4/2004	K-40	1.32 ± 0.26	1.22 ± 0.24	1.27 ± 0.18
MI-5676, 5677	10/4/2004	K-40	1311.00 ± 122.00	1398.00 ± 125.00	1354.50 ± 87.33
SO-5756, 5757	10/4/2004	Gr. Alpha	7.12 ± 3.09	6.69 ± 2.92	6.91 ± 2.13
SO-5756, 5757	10/4/2004	Gr. Beta	19.66 ± 2.63	22.32 ± 2.65	20.99 ± 1.87
SO-5756, 5757	10/4/2004	K-40	16.45 ± 0.86	17.52 ± 0.78	16.99 ± 0.58
VE-6483, 6484	10/6/2004	K-40	9.35 ± 0.55	9.88 ± 0.23	9.61 ± 0.30
MI-5923, 5924	10/12/2004	K-40	1333.60 ± 183.50	1552.40 ± 179.20	1443.00 ± 128.24
SS-6046, 6047	10/13/2004	Cs-137	0.02 ± 0.01	0.02 ± 0.01	0.02 ± 0.01
SS-6046, 6047	10/13/2004	Gr. Beta	7.93 ± 1.72	9.57 ± 1.88	8.75 ± 1.27
SS-6046, 6047	10/13/2004	K-40	5.77 ± 0.42	5.77 ± 0.40	5.77 ± 0.29
DW-6208, 6209	10/15/2004	I-131	0.89 ± 0.26	0.65 ± 0.27	0.77 ± 0.19
BS-6694, 6695	10/19/2004	K-40	11.84 ± 0.67	12.75 ± 0.79	12.29 ± 0.52
VE-6354, 6355	10/25/2004	Gr. Beta	4.82 ± 0.14	4.76 ± 0.14	4.79 ± 0.10
VE-6354, 6355	10/25/2004	K-40	4.71 ± 0.54	4.82 ± 0.61	4.77 ± 0.41
DW-6462, 6463	10/27/2004	Gr. Beta	8.46 ± 1.27	8.22 ± 1.24	8.34 ± 0.89
LW-6377, 6378	10/28/2004	Gr. Beta	2.18 ± 0.54	2.33 ± 0.53	2.25 ± 0.38
SS-6504, 6505	10/29/2004	K-40	9.28 ± 0.61	8.51 ± 0.78	8.89 ± 0.50
LW-6762, 6763	10/31/2004	Gr. Beta	1.85 ± 0.66	1.69 ± 0.64	1.77 ± 0.46
BS-6576, 6577	11/1/2004	Gr. Beta	11.02 ± 1.54	13.77 ± 1.77	12.40 ± 1.17
BS-6576, 6577	11/1/2004	K-40	9.43 ± 0.71	8.84 ± 0.68	9.14 ± 0.49
SO-6715, 6716	11/2/2004	Cs-137	0.29 ± 0.04	0.33 ± 0.06	0.31 ± 0.04
SO-6715, 6716	11/2/2004	Gr. Alpha	10.94 ± 3.95	14.72 ± 4.16	12.83 ± 2.87
SO-6715, 6716	11/2/2004	Gr. Beta	21.33 ± 3.10	24.82 ± 3.10	23.07 ± 2.19
SO-6715, 6716	11/2/2004	K-40	10.42 ± 0.71	12.16 ± 1.06	11.29 ± 0.64
VE-6673, 6674	11/8/2004	Gr. Alpha	0.07 ± 0.04	0.14 ± 0.05	0.11 ± 0.03
VE-6673, 6674	11/8/2004	Gr. Beta	4.50 ± 0.12	4.48 ± 0.12	4.49 ± 0.09
VE-6673, 6674	11/8/2004	K-40	4.05 ± 0.49	4.65 ± 0.55	4.35 ± 0.37

TABLE A-5. In-House "Duplicate" Samples

Lab Code	Date	Analysis	Concentration (pCi/L)[a] First Result	Second Result	Averaged Result
SO-6820, 6821	11/10/2004	K-40	14.41 ± 1.03	15.01 ± 1.09	14.71 ± 0.75
SO-6820, 6821	11/10/2004	Sr-90	0.04 ± 0.02	0.07 ± 0.02	0.06 ± 0.02
SWU-7160, 7161	11/30/2004	Gr. Beta	4.39 ± 1.98	3.09 ± 1.77	3.74 ± 1.33
MI-7062, 7063	12/1/2004	K-40	1456.00 ± 124.80	1640.50 ± 131.40	1548.25 ± 90.61
MI-7062, 7063	12/1/2004	Sr-90	1.13 ± 0.41	0.98 ± 0.43	1.06 ± 0.30
S-7281, 7282	12/5/2004	Cs-137	0.82 ± 0.15	1.16 ± 0.20	0.99 ± 0.12
VE-7343, 7344	12/13/2004	Gr. Beta	5.25 ± 0.14	5.08 ± 0.14	5.16 ± 0.10
VE-7343, 7344	12/13/2004	K-40	4.23 ± 0.71	4.33 ± 0.69	4.28 ± 0.49
MI-7317, 7318	12/14/2004	K-40	1702.80 ± 129.70	1536.80 ± 115.10	1619.80 ± 86.70
WW-7375, 7376	12/14/2004	Gr. Beta	14.13 ± 1.03	15.22 ± 1.06	14.68 ± 0.74
SWU-7507, 7508	12/14/2004	Gr. Beta	4.48 ± 0.66	5.31 ± 0.69	4.89 ± 0.48
DW-7563, 7564	12/27/2004	Gr. Beta	1.88 ± 0.51	2.34 ± 0.52	2.11 ± 0.37
P-7698, 7699	12/27/2004	H-3	246.01 ± 95.00	259.06 ± 95.51	252.53 ± 67.35
AP-7741, 7742	12/28/2004	Be-7	0.06 ± 0.02	0.05 ± 0.02	0.05 ± 0.01

Note: Duplicate analyses are performed on every twentieth sample received in-house. Results are not listed for those analyses with activities that measure below the LLD.

[a] Results are reported in units of pCi/L, except for air filters (pCi/Filter), food products, vegetation, soil, sediment (pCi/g).

[b] 600 minute count time or longer, resulting in lower error.

TABLE A-6. Department of Energy's Mixed Analyte Performance Evaluation Program (MAPEP)[a].

Lab Code	Type	Date	Analysis	Concentration[b] Laboratory result	Known Activity	Control Limits[c]
STSO-1022	soil	05/01/04	Am-241	65.90 ± 4.50	66.97 ± 6.70	46.88 - 87.06
STSO-1022	soil	05/01/04	Co-57	388.90 ± 4.00	399.60 ± 40.00	279.72 - 519.48
STSO-1022	soil	05/01/04	Co-60	524.80 ± 7.10	518.00 ± 51.80	362.60 - 673.40
STSO-1022	soil	05/01/04	Cs-134	403.40 ± 4.60	414.40 ± 41.40	290.08 - 538.72
STSO-1022	soil	05/01/04	Cs-137	829.10 ± 7.60	836.20 ± 83.62	585.34 - 1088.00
STSO-1022	soil	05/01/04	K-40	620.60 ± 29.50	604.00 ± 60.40	422.80 - 785.20
STSO-1022	soil	05/01/04	Ni-63	254.80 ± 8.40	357.05 ± 35.70	249.94 - 464.17
STSO-1022 [a,1]	soil	05/01/04	Tc-99	59.00 ± 6.00	117.66 ± 11.78	82.36 - 152.96
STSO-1022 [a,1]	soil	05/01/04	U-233/4	24.70 ± 3.60	37.00 ± 3.70	25.90 - 48.40
STSO-1022 [a,1]	soil	05/01/04	U-238	24.20 ± 3.50	38.85 ± 3.90	27.20 - 50.51
STSO-1022	soil	05/01/04	Zn-65	743.00 ± 13.10	699.30 ± 69.90	489.51 - 909.09
STAP-1023	Air Filter	05/01/04	Gr. Alpha	0.06 ± 0.02	0.40 ± 0.04	0.00 - 0.80
STAP-1023	Air Filter	05/01/04	Gr. Beta	1.37 ± 0.08	1.20 ± 0.12	0.60 - 1.80
STAP-1024	Air Filter	05/01/04	Am-241	0.08 ± 0.03	0.10 ± 0.01	0.07 - 0.13
STAP-1024	Air Filter	05/01/04	Co-57	2.07 ± 0.06	2.40 ± 0.24	1.68 - 3.12
STAP-1024	Air Filter	05/01/04	Co-60	2.11 ± 0.08	2.30 ± 0.23	1.61 - 2.99
STAP-1024 [g]	Air Filter	05/01/04	Cs-134	1.78 ± 0.08	2.90 ± 0.29	2.03 - 3.77
STAP-1024	Air Filter	05/01/04	Cs-137	1.76 ± 0.08	2.00 ± 0.20	1.40 - 2.60
STAP-1024	Air Filter	05/01/04	Mn-54	2.84 ± 0.11	3.00 ± 0.30	2.10 - 3.90
STAP-1024	Air Filter	05/01/04	Pu-238	0.12 ± 0.01	0.13 ± 0.01	0.09 - 0.17
STAP-1024	Air Filter	05/01/04	Pu-239/40	0.08 ± 0.01	0.09 ± 0.01	0.06 - 0.12
STAP-1024	Air Filter	05/01/04	Sr-90	0.66 ± 0.19	0.80 ± 0.08	0.56 - 1.04
STAP-1024	Air Filter	05/01/04	U-233/4	0.23 ± 0.03	0.21 ± 0.02	0.15 - 0.27
STAP-1024	Air Filter	05/01/04	U-238	0.23 ± 0.03	0.22 ± 0.02	0.15 - 0.29
STAP-1024	Air Filter	05/01/04	Zn-65	3.90 ± 0.22	4.00 ± 0.40	2.80 - 5.20
STW-1026	water	05/01/04	Am-241	0.56 ± 0.07	0.60 ± 0.06	0.42 - 0.78
STW-1026	water	05/01/04	Co-57	184.10 ± 13.50	185.00 ± 18.50	129.50 - 240.50
STW-1026	water	05/01/04	Co-60	164.40 ± 11.70	163.00 ± 16.30	114.10 - 211.90
STW-1026	water	05/01/04	Cs-134	201.10 ± 14.00	208.00 ± 20.80	145.60 - 270.40
STW-1026	water	05/01/04	Cs-137	245.50 ± 15.80	250.00 ± 25.00	175.00 - 325.00
STW-1026	water	05/01/04	Fe-55	37.60 ± 25.30	33.00 ± 3.30	23.10 - 42.90
STW-1026	water	05/01/04	H-3	76.50 ± 5.40	83.00 ± 8.30	58.10 - 107.90
STW-1026	water	05/01/04	Mn-54	272.10 ± 17.50	267.00 ± 26.70	186.90 - 347.10
STW-1026	water	05/01/04	Ni-63	94.40 ± 3.20	100.00 ± 10.00	70.00 - 130.00
STW-1026	water	05/01/04	Pu-238	1.11 ± 0.09	1.20 ± 0.12	0.84 - 1.56
STW-1026	water	05/01/04	Pu-239/40	0.01 ± 0.01	0.00 ± 0.00	0.00 - 0.10
STW-1026	water	05/01/04	Sr-90	6.20 ± 1.10	7.00 ± 0.70	4.90 - 9.10
STW-1026	water	05/01/04	Tc-99	10.70 ± 1.00	10.00 ± 1.00	7.00 - 13.00

TABLE A-6. Department of Energy's Mixed Analyte Performance Evaluation Program (MAPEP)[a].

Lab Code	Type	Date	Analysis	Concentration[b] Laboratory result	Known Activity	Control Limits[c]
STW-1026	water	05/01/04	U-233/4	0.14 ± 0.02	0.12 ± 0.01	0.08 - 0.16
STW-1026	water	05/01/04	U-238	0.94 ± 0.05	0.90 ± 0.09	0.63 - 1.17
STW-1026	water	05/01/04	Zn-65	219.60 ± 27.90	208.00 ± 20.80	145.60 - 270.40
STW-1027	water	05/01/04	Gr. Alpha	1.20 ± 0.10	1.20 ± 0.12	0.00 - 2.40
STW-1027	water	05/01/04	Gr. Beta	4.30 ± 0.10	4.10 ± 0.41	2.05 - 6.15

[a] Results obtained by Environmental, Inc. ,Midwest Laboratory as a participant in the Department of Energy's Mixed Analyte Performance Evaluation Program, Idaho Operations office, Idaho Falls, Idaho

[b] All results are in Bq/kg or Bq/L as requested by the Department of Energy.

[c] MAPEP results are presented as the known values and expected laboratory precision (1 sigma, 1 determination) and control limits as defined by the MAPEP.

[d] The cause of the deviation seems to be incomplete dissolution of the sample.

[e] A spiked soil sample was prepared. Known activity; 32.98 pCi/g; laboratory result 33.47 pCi/g.

[f] The sample was reanalyzed with the same results. Investigation is in progress.

[g] Based on the results of gamma emitting isotopes (Cs-137 and Co-60), the filter geometry appears to be biased by ~10%. Addition of the summation peak at 1400 KeV results in a recalculation of 2.12 ± 0.15 Bq/sample.

TABLE A-7. Environmental Measurements Laboratory Quality Assessment Program (EML)

Lab Code	Type	Date	Concentration[a] Analysis	Laboratory results	EML Result[b]	Control Limits[c]
STW-1009	water	03/01/04	Am-241	1.21 ± 0.02	1.31	0.66 - 1.56
STW-1009	water	03/01/04	Co-60	152.30 ± 0.30	163.20	0.87 - 1.17
STW-1009	water	03/01/04	Cs-137	50.40 ± 0.90	51.95	0.90 - 1.25
STW-1009	water	03/01/04	H-3	263.50 ± 10.00	186.60	0.69 - 1.91
STW-1009	water	03/01/04	Pu-238	1.03 ± 0.04	1.10	0.68 - 1.33
STW-1009	water	03/01/04	Pu-239/40	2.90 ± 0.10	3.08	0.62 - 1.38
STW-1009	water	03/01/04	Sr-90	5.20 ± 0.30	4.76	0.73 - 1.65
STW-1009	water	03/01/04	Uranium	4.35 ± 0.21	4.62	0.40 - 1.45
STW-1010	water	03/01/04	Gr. Alpha	208.00 ± 20.70	326.00	0.55 - 1.31
STW-1010	water	03/01/04	Gr. Beta	1063.00 ± 27.00	1170.00	0.75 - 1.65
STSO-1011	Soil	03/01/04	Am-241	14.10 ± 4.30	13.00	0.52 - 2.41
STSO-1011	Soil	03/01/04	Cs-137	1292.00 ± 13.00	1323.00	0.74 - 1.40
STSO-1011	Soil	03/01/04	K-40	563.00 ± 83.00	539.00	0.70 - 1.59
STSO-1011	Soil	03/01/04	Pu-239/40	20.70 ± 1.10	22.82	0.62 - 1.99
STSO-1011	Soil	03/01/04	Sr-90	72.10 ± 5.80	51.00	0.58 - 2.96
STSO-1011	Soil	03/01/04	Uranium	139.10 ± 10.20	180.22	0.27 - 1.48
STVE-1012	Vegetation	03/01/04	Am-241	4.50 ± 0.20	4.93	0.58 - 2.86
STVE-1012	Vegetation	03/01/04	Co-60	14.10 ± 0.40	14.47	0.64 - 1.49
STVE-1012	Vegetation	03/01/04	Cs-137	573.90 ± 6.00	584.67	0.75 - 1.48
STVE-1012	Vegetation	03/01/04	K-40	709.00 ± 19.30	720.00	0.45 - 1.51
STVE-1012	Vegetation	03/01/04	Pu-239/40	6.60 ± 0.50	6.81	0.60 - 1.98
STVE-1012	Vegetation	03/01/04	Sr-90	766.50 ± 51.30	734.00	0.50 - 1.37
STAP-1013	Air Filter	03/01/04	Am-241	0.11 ± 0.01	0.10	0.62 - 1.93
STAP-1013	Air Filter	03/01/04	Co-60	30.90 ± 1.08	35.40	0.74 - 1.25
STAP-1013 [d]	Air Filter	03/01/04	Cs-134	12.30 ± 1.30	18.20	0.70 - 1.21
STAP-1013	Air Filter	03/01/04	Cs-137	24.90 ± 0.60	26.40	0.72 - 1.32
STAP-1013	Air Filter	03/01/04	Pu-238	0.04 ± 0.01	0.04	0.61 - 1.55
STAP-1013	Air Filter	03/01/04	Pu-239/40	0.17 ± 0.02	0.16	0.67 - 1.58
STAP-1013	Air Filter	03/01/04	Sr-90	1.80 ± 0.20	1.76	0.62 - 2.26
STAP-1013	Air Filter	03/01/04	Uranium	0.17 ± 0.01	0.17	0.79 - 2.88
STAP-1014	Air Filter	03/01/04	Gr. Alpha	1.09 ± 0.06	1.20	0.82 - 1.58
STAP-1014	Air Filter	03/01/04	Gr. Beta	2.68 ± 0.05	2.85	0.75 - 1.94

[a] Results are reported in Bq/L with the following exceptions: Air Filters (Bq/Filter), Soil and Vegetation (Bq/kg).

[b] The EML result listed is the mean of replicate determinations for each nuclide ± the standard error of the mean.

[c] Control limits are reported by EML as the ratio of Reported Value / EML value.

[d] Probable effect of summation peaks and slight difference in filter geometry.

APPENDIX B, 2004 REMP DATA SUMMARY REPORTS

Air Gamma Spectral Summary Report 2004
Radiological Environmental Monitoring Program Data Summary
Perry Nuclear Power Plant, Lake County Ohio Docket no. : 50-440/50-441

Sample Type and Units	Type and Number of Analyses Performed	Lower Limit (LLD)	Mean of Results from All Locations and Number Detected/Number Collected and Range	Mean of Results from All Indicator Locations and Number Detected/Number Collected and Range	Location with Highest Annual Mean: Location # and Distance and Direction	Location with Highest Annual Mean: Mean and Number Detected/Number Collected and Range	Mean of Results from All Control Locations and Number Detected/Number Collected and Range
Air pCi/m3	Be-7 28	N/A	0.05 28 / 28 0.04 - 0.06	0.05 24 / 24 0.04 - 0.06	5 0.60 SW	0.05 4 / 20 0.04 - 0.06	0.04 4 / 4 0.04 - 0.05
Air pCi/m3	Co-58 28	N/A	LLD	-	-	-	-
Air pCi/m3	Co-60 28	N/A	LLD	-	-	-	-
Air pCi/m3	Cs-134 28	0.04	LLD	-	-	-	-
Air pCi/m3	Cs-137 28	0.05	LLD	-	-	-	-

Air Gross Beta Summary Report 2004
Radiological Environmental Monitoring Program Data Summary
Perry Nuclear Power Plant, Lake County Ohio Docket no. : 50-440/50-441

Sample Type and Units	Type and Number of Analyses Performed	Lower Limit (LLD)	Mean of Results from All Locations and Number Detected/Number Collected and Range	Mean of Results from All Indicator Locations and Number Detected/Number Collected and Range	Location with Highest Annual Mean: Location # and Distance and Direction	Location with Highest Annual Mean: Mean and Number Detected/Number Collected and Range	Mean of Results from All Control Locations and Number Detected/Number Collected and Range
Air pCi/m3	Gross Beta 364	0.01	0.02 364 / 364 0.01 - 0.04	0.02 312 / 312 0.01 - 0.04	5 0.60 SW	0.02 52 / 52 0.01 - 0.03	0.02 52 / 52 0.01 - 0.03

Air Iodine Summary Report 2004
Radiological Environmental Monitoring Program Data Summary
Perry Nuclear Power Plant, Lake County Ohio Docket no. : 50-440/50-441

Sample Type and Units	Type and Number of Analyses Performed	Lower Limit (LLD)	Mean of Results from All Locations and Number Detected/Number Collected and Range	Mean of Results from All Indicator Locations and Number Detected/Number Collected and Range	Location with Highest Annual Mean:		Mean of Results from All Control Locations and Number Detected/Number Collected and Range
					Location # and Distance and Direction	Mean and Number Detected/Number Collected and Range	
Air pCi/m3	I-131 364	0.05	LLD	-	-	-	-

Fish Gamma Spectral Summary Report 2004
Radiological Environmental Monitoring Program Data Summary
Perry Nuclear Power Plant, Lake County Ohio Docket no. : 50-440/50-441

Sample Type and Units	Type and Number of Analyses Performed	Lower Limit (LLD)	Mean of Results from All Locations and Number Detected/Number Collected and Range	Mean of Results from All Indicator Locations and Number Detected/Number Collected and Range	Location with Highest Annual Mean: Location # and Distance and Direction	Location with Highest Annual Mean: Mean and Number Detected/Number Collected and Range	Mean of Results from All Control Locations and Number Detected/Number Collected and Range
Fish pCi/kg wet	Co-58 2	97.00	LLD	-	-	-	-
Fish pCi/kg wet	Co-60 2	97.00	LLD	-	-	-	-
Fish pCi/kg wet	Cs-134 2	97.00	LLD	-	-	-	-
Fish pCi/kg wet	Cs-137 2	112.00	LLD	-	-	-	-
Fish pCi/kg wet	Fe-59 2	195.00	LLD	-	-	-	-
Fish pCi/kg wet	K-40 2	N/A	1,320.85 2 / 2 1,216.00 - 1,425.70	1,425.70 1 / 1 1,425.70 - 1,425.70	25 0.60 NNW	1,425.70 1 / 8 1,425.70 - 1,425.70	1,216.00 1 / 1 1,216.00 - 1,216.00
Fish pCi/kg wet	Mn-54 2	97.00	LLD	-	-	-	-
Fish pCi/kg wet	Zn-65 2	195.00	LLD	-	-	-	-

Food Products Gamma Spectral Summary Report 2004
Radiological Environmental Monitoring Program Data Summary
Perry Nuclear Power Plant, Lake County Ohio Docket no. : 50-440/50-441

Sample Type and Units	Type and Number of Analyses Performed	Lower Limit (LLD)	Mean of Results from All Locations and Number Detected/Number Collected and Range	Mean of Results from All Indicator Locations and Number Detected/Number Collected and Range	Location with Highest Annual Mean: Location # and Distance and Direction	Location with Highest Annual Mean: Mean and Number Detected/Number Collected and Range	Mean of Results from All Control Locations and Number Detected/Number Collected and Range
Food Products pCi/kg wet	Be-7 68	N/A	446.84 11 / 68 237.17 - 735.79	437.17 6 / 53 253.56 - 735.79	20 1.90 E	462.90 3 / 77 253.56 - 735.79	458.44 5 / 15 237.17 - 624.67
Food Products pCi/kg wet	Co-58 68	N/A	LLD	-	-	-	-
Food Products pCi/kg wet	Co-60 68	N/A	LLD	-	-	-	-
Food Products pCi/kg wet	Cs-134 68	45.00	LLD	-	-	-	-
Food Products pCi/kg wet	Cs-137 68	60.00	LLD	-	-	-	-
Food Products pCi/kg wet	I-131 68	45.00	LLD	-	-	-	-
Food Products pCi/kg wet	K-40 68	N/A	4,148.69 68 / 68 1,981.50 - 6,998.80	3,997.38 53 / 53 1,981.50 - 6,161.50	70 16.20 SSW	4,683.33 15 / 105 3,284.70 - 6,998.80	4,683.33 15 / 15 3,284.70 - 6,998.80

Milk Gamma Spectral Summary Report 2004
Radiological Environmental Monitoring Program Data Summary
Perry Nuclear Power Plant, Lake County Ohio Docket no. : 50-440/50-441

Sample Type and Units	Type and Number of Analyses Performed	Lower Limit (LLD)	Mean of Results from All Locations and Number Detected/Number Collected and Range	Mean of Results from All Indicator Locations and Number Detected/Number Collected and Range	Location with Highest Annual Mean: Location # and Distance and Direction	Location with Highest Annual Mean: Mean and Number Detected/Number Collected and Range	Mean of Results from All Control Locations and Number Detected/Number Collected and Range
Milk pCi/L	Ba-140 35	45.00	LLD	-	-	-	-
Milk pCi/L	Cs-134 35	11.00	LLD	-	-	-	-
Milk pCi/L	Cs-137 35	13.00	LLD	-	-	-	-
Milk pCi/L	K-40 35	N/A	1,525.40 35 / 35 1,063.00 - 1,920.00	1,749.23 16 / 16 1,514.80 - 1,920.00	41 5.80 SSE	1,768.99 7 / 35 1,540.60 - 1,896.50	1,336.92 19 / 19 1,063.00 - 1,518.70
Milk pCi/L	La-140 35	11.00	LLD	-	-	-	-

Milk Iodine Summary Report 2004
Radiological Environmental Monitoring Program Data Summary
Perry Nuclear Power Plant, Lake County Ohio Docket no. : 50-440/50-441

Sample Type and Units	Type and Number of Analyses Performed	Lower Limit (LLD)	Mean of Results from All Locations and Number Detected/Number Collected and Range	Mean of Results from All Indicator Locations and Number Detected/Number Collected and Range	Location with Highest Annual Mean:		Mean of Results from All Control Locations and Number Detected/Number Collected and Range
					Location # and Distance and Direction	Mean and Number Detected/Number Collected and Range	
Milk pCi/L	I-131 35	0.75	LLD	-	-	-	-

Sediment Gamma Spectral Summary Report 2004
Radiological Environmental Monitoring Program Data Summary
Perry Nuclear Power Plant, Lake County Ohio Docket no. : 50-440/50-441

Sample Type and Units	Type and Number of Analyses Performed	Lower Limit (LLD)	Mean of Results from All Locations and Number Detected/Number Collected and Range	Mean of Results from All Indicator Locations and Number Detected/Number Collected and Range	Location with Highest Annual Mean: Location # and Distance and Direction	Location with Highest Annual Mean: Mean and Number Detected/Number Collected and Range	Mean of Results from All Control Locations and Number Detected/Number Collected and Range
Sediment pCi/kg dry	Co-58 13	50.00	LLD	-	-	-	-
Sediment pCi/kg dry	Co-60 13	40.00	LLD	-	-	-	-
Sediment pCi/kg dry	Cs-134 13	112.00	LLD	-	-	-	-
Sediment pCi/kg dry	Cs-137 13	185.00	485.41 6 / 13 138.40 - 900.78	278.91 4 / 11 138.40 - 598.01	32 15.80 WSW	898.41 2 / 10 896.04 - 900.78	898.41 2 / 2 896.04 - 900.78
Sediment pCi/kg dry	K-40 13	N/A	13,942.78 13 / 13 9,046.90 - 24,663.00	12,128.38 11 / 11 9,046.90 - 16,106.00	32 15.80 WSW	23,922.00 2 / 10 23,181.00 - 24,663.00	23,922.00 2 / 2 23,181.00 - 24,663.00

TLD Gamma Dose Summary Report 2004
Radiological Environmental Monitoring Program Data Summary
Perry Nuclear Power Plant, Lake County Ohio Docket no. : 50-440/50-441

Sample Type and Units	Type and Number of Analyses Performed	Lower Limit (LLD)	Mean of Results from All Locations and Number Detected/Number Collected and Range	Mean of Results from All Indicator Locations and Number Detected/Number Collected and Range	Location with Highest Annual Mean: Location # and Distance and Direction	Location with Highest Annual Mean: Mean and Number Detected/Number Collected and Range	Mean of Results from All Control Locations and Number Detected/Number Collected and Range
TLD	Direct 112	1.00	15.85 112 / 112 11.08 - 20.62	15.86 104 / 104 11.08 - 20.62	29 4.30 SSE	19.78 4 / 4 17.55 - 20.62	15.81 8 / 8 14.13 - 16.87
TLD	Direct 112	1.00	16.49 112 / 112 11.77 - 22.37	16.54 104 / 104 11.77 - 22.37	33 4.50 S	20.97 4 / 4 19.61 - 22.37	15.83 8 / 8 14.77 - 16.71
TLD	Direct 28	1.00	63.70 28 / 28 51.88 - 78.82	63.89 26 / 26 51.88 - 78.82	36 3.90 WSW	78.82 1 / 1 78.82 - 78.82	61.18 2 / 2 57.34 - 65.02

Water Gamma Spectral Summary Report 2004
Radiological Environmental Monitoring Program Data Summary
Perry Nuclear Power Plant, Lake County Ohio Docket no. : 50-440/50-441

Sample Type and Units	Type and Number of Analyses Performed	Lower Limit (LLD)	Mean of Results from All Locations and Number Detected/Number Collected and Range	Mean of Results from All Indicator Locations and Number Detected/Number Collected and Range	Location with Highest Annual Mean: Location # and Distance and Direction	Location with Highest Annual Mean: Mean and Number Detected/Number Collected and Range	Mean of Results from All Control Locations and Number Detected/Number Collected and Range
Water pCi/L	Cs-137 56	13.00	LLD	-	-	-	-
Water pCi/L	Fe-59 56	22.00	LLD	-	-	-	-
Water pCi/L	La-140 56	11.00	LLD	-	-	-	-
Water pCi/L	Mn-54 56	11.00	LLD	-	-	-	-
Water pCi/L	Nb-95 56	11.00	LLD	-	-	-	-
Water pCi/L	Zn-65 56	22.00	LLD	-	-	-	-
Water pCi/L	Zr-95 56	22.00	LLD	-	-	-	-
Water pCi/L	Ba-140 56	45.00	LLD	-	-	-	-
Water pCi/L	Co-58 56	11.00	LLD	-	-	-	-
Water pCi/L	Co-60 56	11.00	LLD	-	-	-	-
Water pCi/L	Cs-134 56	11.00	LLD	-	-	-	-

Water Gross Beta Summary Report 2004
Radiological Environmental Monitoring Program Data Summary
Perry Nuclear Power Plant, Lake County Ohio Docket no. : 50-440/50-441

Sample Type and Units	Type and Number of Analyses Performed	Lower Limit (LLD)	Mean of Results from All Locations and Number Detected/Number Collected and Range	Mean of Results from All Indicator Locations and Number Detected/Number Collected and Range	Location with Highest Annual Mean: Location # and Distance and Direction	Location with Highest Annual Mean: Mean and Number Detected/Number Collected and Range	Mean of Results from All Control Locations and Number Detected/Number Collected and Range
Water pCi/L	Gross Beta 56	3.00	3.09 1 / 56 3.09 - 3.09	3.09 1 / 44 3.09 - 3.09	34 0.70 NW	3.09 1 / 12 3.09 - 3.09	LLD 0 / 12

Water Tritium Summary Report 2004
Radiological Environmental Monitoring Program Data Summary
Perry Nuclear Power Plant, Lake County Ohio Docket no. : 50-440/50-441

Sample Type and Units	Type and Number of Analyses Performed	Lower Limit (LLD)	Mean of Results from All Locations and Number Detected/Number Collected and Range	Mean of Results from All Indicator Locations and Number Detected/Number Collected and Range	Location with Highest Annual Mean: Location # and Distance and Direction	Location with Highest Annual Mean: Mean and Number Detected/Number Collected and Range	Mean of Results from All Control Locations and Number Detected/Number Collected and Range
Water pCi/L	H-3 20	1,500.00	LLD	-	-	-	-

APPENDIX C, 2004 REMP DETAILED DATA REPORTS

Air Gamma Spectral Detail Report 2004
Radiological Environmental Monitoring Program Detail Data
Perry Nuclear Power Plant, Lake County Ohio Docket no. : 50-440/50-441
Sample Frequency is: Quarterly Results in pCi/m3 +/- 2 Sigma

Location	Sample Type	Collection Date	Be-7	Co-58	Co-60	Cs-134	Cs-137
1	Air	3/31/04	0.047 +/- 0.009	< 0.000	< 0.000	< 0.000	< 0.000
1	Air	6/30/04	0.058 +/- 0.007	< 0.000	< 0.000	< 0.000	< 0.000
1	Air	9/29/04	0.046 +/- 0.007	< 0.000	< 0.000	< 0.000	< 0.000
1	Air	12/29/04	0.047 +/- 0.007	< 0.000	< 0.000	< 0.000	< 0.001
3	Air	3/31/04	0.043 +/- 0.009	< 0.000	< 0.000	< 0.000	< 0.001
3	Air	6/30/04	0.056 +/- 0.010	< 0.000	< 0.000	< 0.000	< 0.000
3	Air	9/29/04	0.046 +/- 0.007	< 0.000	< 0.000	< 0.000	< 0.000
3	Air	12/29/04	0.046 +/- 0.009	< 0.000	< 0.000	< 0.000	< 0.000
4	Air	3/31/04	0.046 +/- 0.005	< 0.000	< 0.000	< 0.000	< 0.000
4	Air	6/30/04	0.056 +/- 0.009	< 0.000	< 0.000	< 0.000	< 0.000
4	Air	9/29/04	0.038 +/- 0.007	< 0.000	< 0.000	< 0.000	< 0.000

Air Gamma Spectral Detail Report 2004
Radiological Environmental Monitoring Program Detail Data
Perry Nuclear Power Plant, Lake County Ohio Docket no. : 50-440/50-441
Sample Frequency is: Quarterly Results in pCi/m3 +/- 2 Sigma

Location	Sample Type	Collection Date	Be-7	Co-58	Co-60	Cs-134	Cs-137
4	Air	12/29/04	0.043 +/- 0.009	< 0.000	< 0.000	< 0.000	< 0.000
5	Air	3/31/04	0.056 +/- 0.008	< 0.000	< 0.000	< 0.000	< 0.000
5	Air	6/30/04	0.054 +/- 0.010	< 0.000	< 0.000	< 0.000	< 0.000
5	Air	9/29/04	0.050 +/- 0.009	< 0.000	< 0.000	< 0.000	< 0.000
5	Air	12/29/04	0.043 +/- 0.007	< 0.000	< 0.000	< 0.000	< 0.000
6	Air	3/31/04	0.042 +/- 0.007	< 0.000	< 0.000	< 0.001	< 0.000
6	Air	6/30/04	0.040 +/- 0.007	< 0.000	< 0.000	< 0.000	< 0.000
6	Air	9/29/04	0.045 +/- 0.007	< 0.000	< 0.000	< 0.000	< 0.000
6	Air	12/29/04	0.045 +/- 0.009	< 0.000	< 0.000	< 0.000	< 0.000
7	Air	3/31/04	0.045 +/- 0.008	< 0.000	< 0.000	< 0.000	< 0.000
7	Air	6/30/04	0.042 +/- 0.008	< 0.000	< 0.000	< 0.000	< 0.000

Air Gamma Spectral Detail Report 2004
Radiological Environmental Monitoring Program Detail Data
Perry Nuclear Power Plant, Lake County Ohio Docket no. : 50-440/50-441
Sample Frequency is: Quarterly Results in pCi/m3 +/- 2 Sigma

Location	Sample Type	Collection Date	Be-7	Co-58	Co-60	Cs-134	Cs-137
7	Air	9/29/04	0.046 +/- 0.007	< 0.000	< 0.000	< 0.000	< 0.000
7	Air	12/29/04	0.038 +/- 0.007	< 0.000	< 0.000	< 0.000	< 0.000
35	Air	3/31/04	0.051 +/- 0.008	< 0.000	< 0.000	< 0.000	< 0.000
35	Air	6/30/04	0.054 +/- 0.009	< 0.000	< 0.000	< 0.000	< 0.000
35	Air	9/29/04	0.048 +/- 0.007	< 0.000	< 0.000	< 0.000	< 0.000
35	Air	12/29/04	0.039 +/- 0.009	< 0.000	< 0.000	< 0.000	< 0.000

Air Gross Beta Detail Report 2004
Radiological Environmental Monitoring Program Data Summary
Perry Nuclear Power Plant, Lake County Ohio Docket no. : 50-440/50-441
Sample Frequency is: Weekly Results in pCi/m3 +/- 2 Sigma

		Location				
		1	3	4	5	6
Collection Date	Sample Type	7	35			
1/7/04	Air	0.029 +/- 0.003 0.031 +/- 0.003	0.030 +/- 0.003 0.030 +/- 0.003	0.027 +/- 0.003	0.030 +/- 0.003	0.033 +/- 0.003
1/14/04	Air	0.031 +/- 0.003 0.034 +/- 0.003	0.029 +/- 0.003 0.027 +/- 0.003	0.029 +/- 0.003	0.031 +/- 0.003	0.029 +/- 0.003
1/21/04	Air	0.014 +/- 0.003 0.014 +/- 0.003	0.014 +/- 0.002 0.014 +/- 0.002	0.013 +/- 0.003	0.016 +/- 0.003	0.015 +/- 0.003
1/28/04	Air	0.021 +/- 0.003 0.024 +/- 0.003	0.020 +/- 0.003 0.020 +/- 0.003	0.020 +/- 0.003	0.022 +/- 0.003	0.022 +/- 0.003
2/4/04	Air	0.034 +/- 0.003 0.037 +/- 0.003	0.036 +/- 0.003 0.033 +/- 0.003	0.034 +/- 0.003	0.034 +/- 0.003	0.033 +/- 0.003
2/11/04	Air	0.031 +/- 0.003 0.036 +/- 0.003	0.034 +/- 0.003 0.033 +/- 0.003	0.033 +/- 0.003	0.034 +/- 0.003	0.032 +/- 0.003
2/18/04	Air	0.031 +/- 0.003 0.035 +/- 0.003	0.032 +/- 0.003 0.034 +/- 0.003	0.034 +/- 0.003	0.032 +/- 0.003	0.028 +/- 0.003
2/25/04	Air	0.034 +/- 0.003 0.036 +/- 0.003	0.034 +/- 0.003 0.031 +/- 0.003	0.033 +/- 0.003	0.031 +/- 0.003	0.031 +/- 0.003
3/3/04	Air	0.033 +/- 0.002 0.038 +/- 0.003	0.033 +/- 0.003 0.035 +/- 0.003	0.035 +/- 0.003	0.031 +/- 0.002	0.032 +/- 0.002
3/10/04	Air	0.025 +/- 0.003 0.023 +/- 0.003	0.022 +/- 0.003 0.022 +/- 0.003	0.024 +/- 0.003	0.023 +/- 0.003	0.017 +/- 0.003
3/17/04	Air	0.020 +/- 0.003 0.023 +/- 0.003	0.021 +/- 0.003 0.020 +/- 0.003	0.018 +/- 0.003	0.022 +/- 0.003	0.019 +/- 0.003
3/24/04	Air	0.020 +/- 0.003 0.022 +/- 0.003	0.021 +/- 0.003 0.018 +/- 0.003	0.018 +/- 0.003	0.019 +/- 0.003	0.020 +/- 0.003
3/31/04	Air	0.018 +/- 0.002 0.018 +/- 0.002	0.019 +/- 0.002 0.018 +/- 0.002	0.017 +/- 0.002	0.019 +/- 0.002	0.020 +/- 0.002
4/7/04	Air	0.015 +/- 0.003 0.015 +/- 0.003	0.014 +/- 0.003 0.015 +/- 0.003	0.014 +/- 0.003	0.015 +/- 0.002	0.015 +/- 0.003
4/14/04	Air	0.017 +/- 0.003 0.018 +/- 0.003	0.015 +/- 0.003 0.018 +/- 0.003	0.018 +/- 0.003	0.017 +/- 0.002	0.017 +/- 0.003
4/21/04	Air	0.020 +/- 0.003 0.022 +/- 0.003	0.021 +/- 0.003 0.024 +/- 0.003	0.024 +/- 0.003	0.022 +/- 0.003	0.021 +/- 0.003

Air Gross Beta Detail Report 2004

Radiological Environmental Monitoring Program Data Summary

Perry Nuclear Power Plant, Lake County Ohio Docket no. : 50-440/50-441

Sample Frequency is: Weekly Results in pCi/m3 +/- 2 Sigma

		Location				
		1	3	4	5	6
Collection Date	Sample Type	7	35			
4/28/04	Air	0.014 +/- 0.002 0.015 +/- 0.002	0.014 +/- 0.002 0.015 +/- 0.002	0.014 +/- 0.002	0.014 +/- 0.002	0.017 +/- 0.002
5/5/04	Air	0.017 +/- 0.003 0.018 +/- 0.003	0.017 +/- 0.002 0.018 +/- 0.003	0.017 +/- 0.002	0.020 +/- 0.003	0.017 +/- 0.003
5/12/04	Air	0.021 +/- 0.002 0.018 +/- 0.002	0.018 +/- 0.002 0.021 +/- 0.003	0.019 +/- 0.002	0.020 +/- 0.002	0.022 +/- 0.002
5/19/04	Air	0.014 +/- 0.003 0.015 +/- 0.002	0.013 +/- 0.002 0.015 +/- 0.003	0.015 +/- 0.002	0.017 +/- 0.003	0.016 +/- 0.003
5/26/04	Air	0.015 +/- 0.003 0.011 +/- 0.002	0.013 +/- 0.002 0.011 +/- 0.003	0.014 +/- 0.002	0.013 +/- 0.002	0.013 +/- 0.002
6/2/04	Air	0.016 +/- 0.002 0.013 +/- 0.002	0.012 +/- 0.002 0.013 +/- 0.002	0.011 +/- 0.002	0.014 +/- 0.002	0.012 +/- 0.002
6/9/04	Air	0.020 +/- 0.002 0.020 +/- 0.002	0.019 +/- 0.002 0.018 +/- 0.003	0.019 +/- 0.002	0.021 +/- 0.002	0.019 +/- 0.002
6/16/04	Air	0.014 +/- 0.002 0.013 +/- 0.002	0.013 +/- 0.002 0.012 +/- 0.002	0.013 +/- 0.002	0.013 +/- 0.002	0.014 +/- 0.002
6/23/04	Air	0.014 +/- 0.002 0.014 +/- 0.002	0.015 +/- 0.002 0.014 +/- 0.002	0.013 +/- 0.002	0.015 +/- 0.002	0.013 +/- 0.002
6/30/04	Air	0.013 +/- 0.002 0.012 +/- 0.002	0.016 +/- 0.002 0.012 +/- 0.002	0.016 +/- 0.002	0.013 +/- 0.002	0.012 +/- 0.002
7/7/04	Air	0.018 +/- 0.002 0.017 +/- 0.002	0.018 +/- 0.002 0.018 +/- 0.002	0.016 +/- 0.002	0.017 +/- 0.002	0.017 +/- 0.002
7/14/04	Air	0.012 +/- 0.002 0.014 +/- 0.002	0.015 +/- 0.002 0.015 +/- 0.002	0.014 +/- 0.002	0.016 +/- 0.002	0.015 +/- 0.002
7/21/04	Air	0.021 +/- 0.002 0.017 +/- 0.002	0.019 +/- 0.003 0.021 +/- 0.003	0.016 +/- 0.002	0.018 +/- 0.002	0.020 +/- 0.002
7/28/04	Air	0.013 +/- 0.003 0.014 +/- 0.002	0.014 +/- 0.003 0.014 +/- 0.003	0.014 +/- 0.002	0.016 +/- 0.003	0.015 +/- 0.003
8/4/04	Air	0.028 +/- 0.003 0.024 +/- 0.003	0.025 +/- 0.003 0.027 +/- 0.003	0.021 +/- 0.002	0.025 +/- 0.003	0.026 +/- 0.003

Air Gross Beta Detail Report 2004
Radiological Environmental Monitoring Program Data Summary
Perry Nuclear Power Plant, Lake County Ohio Docket no. : 50-440/50-441
Sample Frequency is: Weekly Results in pCi/m3 +/- 2 Sigma

		Location				
		1	3	4	5	6
Collection Date	Sample Type	7	35			
8/11/04	Air	0.020 +/- 0.003 0.017 +/- 0.003	0.020 +/- 0.003 0.020 +/- 0.003	0.019 +/- 0.003	0.023 +/- 0.003	0.021 +/- 0.003
8/18/04	Air	0.017 +/- 0.002 0.015 +/- 0.002	0.014 +/- 0.002 0.018 +/- 0.002	0.016 +/- 0.002	0.020 +/- 0.003	0.017 +/- 0.002
8/25/04	Air	0.026 +/- 0.003 0.025 +/- 0.003	0.028 +/- 0.003 0.027 +/- 0.003	0.025 +/- 0.002	0.031 +/- 0.003	0.026 +/- 0.003
9/1/04	Air	0.017 +/- 0.002 0.017 +/- 0.002	0.019 +/- 0.003 0.018 +/- 0.003	0.017 +/- 0.002	0.022 +/- 0.003	0.017 +/- 0.002
9/8/04	Air	0.025 +/- 0.003 0.023 +/- 0.003	0.021 +/- 0.003 0.023 +/- 0.003	0.022 +/- 0.003	0.030 +/- 0.003	0.024 +/- 0.003
9/15/04	Air	0.023 +/- 0.003 0.022 +/- 0.003	0.021 +/- 0.003 0.023 +/- 0.003	0.019 +/- 0.003	0.024 +/- 0.003	0.021 +/- 0.003
9/22/04	Air	0.021 +/- 0.003 0.018 +/- 0.003	0.019 +/- 0.003 0.019 +/- 0.003	0.018 +/- 0.003	0.020 +/- 0.003	0.014 +/- 0.003
9/29/04	Air	0.031 +/- 0.003 0.028 +/- 0.003	0.028 +/- 0.003 0.030 +/- 0.003	0.028 +/- 0.003	0.032 +/- 0.003	0.030 +/- 0.003
10/6/04	Air	0.020 +/- 0.003 0.018 +/- 0.003	0.018 +/- 0.003 0.023 +/- 0.003	0.017 +/- 0.003	0.025 +/- 0.004	0.015 +/- 0.003
10/13/04	Air	0.026 +/- 0.003 0.022 +/- 0.003	0.025 +/- 0.003 0.023 +/- 0.003	0.020 +/- 0.002	0.030 +/- 0.003	0.022 +/- 0.003
10/20/04	Air	0.019 +/- 0.003 0.019 +/- 0.003	0.019 +/- 0.003 0.019 +/- 0.003	0.018 +/- 0.003	0.021 +/- 0.003	0.019 +/- 0.003
10/27/04	Air	0.015 +/- 0.002 0.014 +/- 0.002	0.013 +/- 0.002 0.014 +/- 0.002	0.016 +/- 0.002	0.016 +/- 0.002	0.017 +/- 0.002
11/3/04	Air	0.019 +/- 0.002 0.023 +/- 0.003	0.023 +/- 0.002 0.022 +/- 0.002	0.021 +/- 0.002	0.022 +/- 0.003	0.025 +/- 0.003
11/10/04	Air	0.017 +/- 0.002 0.019 +/- 0.002	0.020 +/- 0.002 0.017 +/- 0.002	0.016 +/- 0.002	0.021 +/- 0.003	0.021 +/- 0.003
11/17/04	Air	0.022 +/- 0.002 0.026 +/- 0.002	0.024 +/- 0.002 0.025 +/- 0.002	0.023 +/- 0.002	0.027 +/- 0.002	0.024 +/- 0.002
11/24/04	Air	0.029 +/- 0.003 0.026 +/- 0.003	0.029 +/- 0.003 0.025 +/- 0.003	0.024 +/- 0.003	0.029 +/- 0.003	0.025 +/- 0.003

Air Gross Beta Detail Report 2004
Radiological Environmental Monitoring Program Data Summary
Perry Nuclear Power Plant, Lake County Ohio Docket no. : 50-440/50-441
Sample Frequency is: Weekly Results in pCi/m3 +/- 2 Sigma

		Location				
		1	3	4	5	6
Collection Date	Sample Type	7	35			
12/1/04	Air	0.016 +/- 0.003 0.017 +/- 0.003	0.015 +/- 0.003 0.016 +/- 0.003	0.014 +/- 0.003	0.017 +/- 0.003	0.016 +/- 0.003
12/8/04	Air	0.024 +/- 0.003 0.025 +/- 0.003	0.023 +/- 0.003 0.023 +/- 0.003	0.023 +/- 0.003	0.029 +/- 0.003	0.027 +/- 0.003
12/15/04	Air	0.017 +/- 0.003 0.013 +/- 0.003	0.015 +/- 0.003 0.016 +/- 0.003	0.016 +/- 0.003	0.016 +/- 0.003	0.015 +/- 0.003
12/22/04	Air	0.025 +/- 0.003 0.021 +/- 0.003	0.023 +/- 0.003 0.024 +/- 0.003	0.019 +/- 0.003	0.027 +/- 0.003	0.022 +/- 0.003
12/29/04	Air	0.022 +/- 0.003 0.022 +/- 0.003	0.023 +/- 0.003 0.021 +/- 0.003	0.022 +/- 0.003	0.024 +/- 0.003	0.022 +/- 0.003

Air Iodine Detail Report 2004

Radiological Environmental Monitoring Program Detail Data
Perry Nuclear Power Plant, Lake County Ohio Docket no. : 50-440/50-441
Sample Frequency is: Weekly Results in pCi/m3 +/- 2 Sigma

Location	Sample Type	Collection Dat	I-131
1	Air	1/7/04	< 0.004
1	Air	1/14/04	< 0.006
1	Air	1/21/04	< 0.008
1	Air	1/28/04	< 0.006
1	Air	2/4/04	< 0.007
1	Air	2/11/04	< 0.007
1	Air	2/18/04	< 0.008
1	Air	2/25/04	< 0.006
1	Air	3/3/04	< 0.005
1	Air	3/10/04	< 0.004
1	Air	3/17/04	< 0.005
1	Air	3/24/04	< 0.006
1	Air	3/31/04	< 0.005
1	Air	4/7/04	< 0.007
1	Air	4/14/04	< 0.006
1	Air	4/21/04	< 0.004
1	Air	4/28/04	< 0.003
1	Air	5/5/04	< 0.006
1	Air	5/12/04	< 0.005
1	Air	5/19/04	< 0.007
1	Air	5/26/04	< 0.007
1	Air	6/2/04	< 0.007
1	Air	6/9/04	< 0.003
1	Air	6/16/04	< 0.006
1	Air	6/23/04	< 0.005
1	Air	6/30/04	< 0.007
1	Air	7/7/04	< 0.005
1	Air	7/14/04	< 0.005
1	Air	7/21/04	< 0.005
1	Air	7/28/04	< 0.005
1	Air	8/4/04	< 0.007
1	Air	8/11/04	< 0.006
1	Air	8/18/04	< 0.005
1	Air	8/25/04	< 0.005
1	Air	9/1/04	< 0.005
1	Air	9/8/04	< 0.005
1	Air	9/15/04	< 0.005
1	Air	9/22/04	< 0.005
1	Air	9/29/04	< 0.006
1	Air	10/6/04	< 0.007
1	Air	10/13/04	< 0.005
1	Air	10/20/04	< 0.005

Radiological Environmental Monitoring Program Detail Data
Perry Nuclear Power Plant, Lake County Ohio Docket no. : 50-440/50-441
Sample Frequency is: Weekly Results in pCi/m3 +/- 2 Sigma

Location	Sample Type	Collection Dat	I-131
1	Air	10/27/04	< 0.007
1	Air	11/3/04	< 0.005
1	Air	11/10/04	< 0.003
1	Air	11/17/04	< 0.006
1	Air	11/24/04	< 0.010
1	Air	12/1/04	< 0.006
1	Air	12/8/04	< 0.009
1	Air	12/15/04	< 0.005
1	Air	12/22/04	< 0.008
1	Air	12/29/04	< 0.005
3	Air	1/7/04	< 0.004
3	Air	1/14/04	< 0.005
3	Air	1/21/04	< 0.008
3	Air	1/28/04	< 0.005
3	Air	2/4/04	< 0.006
3	Air	2/11/04	< 0.007
3	Air	2/18/04	< 0.008
3	Air	2/25/04	< 0.006
3	Air	3/3/04	< 0.005
3	Air	3/10/04	< 0.005
3	Air	3/17/04	< 0.005
3	Air	3/24/04	< 0.006
3	Air	3/31/04	< 0.005
3	Air	4/7/04	< 0.007
3	Air	4/14/04	< 0.007
3	Air	4/21/04	< 0.004
3	Air	4/28/04	< 0.003
3	Air	5/5/04	< 0.006
3	Air	5/12/04	< 0.005
3	Air	5/19/04	< 0.007
3	Air	5/26/04	< 0.007
3	Air	6/2/04	< 0.008
3	Air	6/9/04	< 0.003
3	Air	6/16/04	< 0.006
3	Air	6/23/04	< 0.005
3	Air	6/30/04	< 0.008
3	Air	7/7/04	< 0.006
3	Air	7/14/04	< 0.005
3	Air	7/21/04	< 0.006
3	Air	7/28/04	< 0.005
3	Air	8/4/04	< 0.007
3	Air	8/11/04	< 0.006

Air Iodine Detail Report 2004

Radiological Environmental Monitoring Program Detail Data
Perry Nuclear Power Plant, Lake County Ohio Docket no. : 50-440/50-441
Sample Frequency is: Weekly Results in pCi/m3 +/- 2 Sigma

Location	Sample Type	Collection Dat	I-131
3	Air	8/18/04	< 0.005
3	Air	8/25/04	< 0.005
3	Air	9/1/04	< 0.005
3	Air	9/8/04	< 0.005
3	Air	9/15/04	< 0.005
3	Air	9/22/04	< 0.005
3	Air	9/29/04	< 0.006
3	Air	10/6/04	< 0.007
3	Air	10/13/04	< 0.005
3	Air	10/20/04	< 0.005
3	Air	10/27/04	< 0.007
3	Air	11/3/04	< 0.005
3	Air	11/10/04	< 0.003
3	Air	11/17/04	< 0.006
3	Air	11/24/04	< 0.010
3	Air	12/1/04	< 0.006
3	Air	12/8/04	< 0.009
3	Air	12/15/04	< 0.005
3	Air	12/22/04	< 0.008
3	Air	12/29/04	< 0.005
4	Air	1/7/04	< 0.004
4	Air	1/14/04	< 0.006
4	Air	1/21/04	< 0.008
4	Air	1/28/04	< 0.006
4	Air	2/4/04	< 0.007
4	Air	2/11/04	< 0.007
4	Air	2/18/04	< 0.008
4	Air	2/25/04	< 0.006
4	Air	3/3/04	< 0.005
4	Air	3/10/04	< 0.005
4	Air	3/17/04	< 0.005
4	Air	3/24/04	< 0.006
4	Air	3/31/04	< 0.005
4	Air	4/7/04	< 0.007
4	Air	4/14/04	< 0.006
4	Air	4/21/04	< 0.004
4	Air	4/28/04	< 0.003
4	Air	5/5/04	< 0.006
4	Air	5/12/04	< 0.005
4	Air	5/19/04	< 0.006
4	Air	5/26/04	< 0.007
4	Air	6/2/04	< 0.007

Air Iodine Detail Report 04

Radiological Environmental Monitoring Program Detail Data
Perry Nuclear Power Plant, Lake County Ohio Docket no. : 50-440/50-441
Sample Frequency is: Weekly Results in pCi/m3 +/- 2 Sigma

Location	Sample Type	Collection Dat	I-131
4	Air	6/9/04	< 0.003
4	Air	6/16/04	< 0.005
4	Air	6/23/04	< 0.005
4	Air	6/30/04	< 0.006
4	Air	7/7/04	< 0.005
4	Air	7/14/04	< 0.005
4	Air	7/21/04	< 0.005
4	Air	7/28/04	< 0.004
4	Air	8/4/04	< 0.006
4	Air	8/11/04	< 0.005
4	Air	8/18/04	< 0.004
4	Air	8/25/04	< 0.005
4	Air	9/1/04	< 0.005
4	Air	9/8/04	< 0.005
4	Air	9/15/04	< 0.004
4	Air	9/22/04	< 0.005
4	Air	9/29/04	< 0.006
4	Air	10/6/04	< 0.006
4	Air	10/13/04	< 0.005
4	Air	10/20/04	< 0.005
4	Air	10/27/04	< 0.007
4	Air	11/3/04	< 0.005
4	Air	11/10/04	< 0.003
4	Air	11/17/04	< 0.006
4	Air	11/24/04	< 0.010
4	Air	12/1/04	< 0.006
4	Air	12/8/04	< 0.008
4	Air	12/15/04	< 0.005
4	Air	12/22/04	< 0.007
4	Air	12/29/04	< 0.004
5	Air	1/7/04	< 0.004
5	Air	1/14/04	< 0.006
5	Air	1/21/04	< 0.008
5	Air	1/28/04	< 0.006
5	Air	2/4/04	< 0.006
5	Air	2/11/04	< 0.007
5	Air	2/18/04	< 0.007
5	Air	2/25/04	< 0.006
5	Air	3/3/04	< 0.005
5	Air	3/10/04	< 0.004
5	Air	3/17/04	< 0.005
5	Air	3/24/04	< 0.006

Air Iodine Detail Report 2004

Radiological Environmental Monitoring Program Detail Data
Perry Nuclear Power Plant, Lake County Ohio Docket no. : 50-440/50-441
Sample Frequency is: Weekly Results in pCi/m3 +/- 2 Sigma

Location	Sample Type	Collection Dat	I-131
5	Air	3/31/04	< 0.005
5	Air	4/7/04	< 0.007
5	Air	4/14/04	< 0.006
5	Air	4/21/04	< 0.004
5	Air	4/28/04	< 0.003
5	Air	5/5/04	< 0.006
5	Air	5/12/04	< 0.005
5	Air	5/19/04	< 0.007
5	Air	5/26/04	< 0.007
5	Air	6/2/04	< 0.007
5	Air	6/9/04	< 0.003
5	Air	6/16/04	< 0.006
5	Air	6/23/04	< 0.005
5	Air	6/30/04	< 0.007
5	Air	7/7/04	< 0.005
5	Air	7/14/04	< 0.005
5	Air	7/21/04	< 0.005
5	Air	7/28/04	< 0.005
5	Air	8/4/04	< 0.007
5	Air	8/11/04	< 0.006
5	Air	8/18/04	< 0.005
5	Air	8/25/04	< 0.005
5	Air	9/1/04	< 0.005
5	Air	9/8/04	< 0.006
5	Air	9/15/04	< 0.005
5	Air	9/22/04	< 0.005
5	Air	9/29/04	< 0.006
5	Air	10/6/04	< 0.009
5	Air	10/13/04	< 0.006
5	Air	10/20/04	< 0.005
5	Air	10/27/04	< 0.008
5	Air	11/3/04	< 0.005
5	Air	11/10/04	< 0.004
5	Air	11/17/04	< 0.006
5	Air	11/24/04	< 0.010
5	Air	12/1/04	< 0.006
5	Air	12/8/04	< 0.008
5	Air	12/15/04	< 0.005
5	Air	12/22/04	< 0.007
5	Air	12/29/04	< 0.004
6	Air	1/7/04	< 0.004
6	Air	1/14/04	< 0.006

Radiological Environmental Monitoring Program Detail Data
Perry Nuclear Power Plant, Lake County Ohio Docket no. : 50-440/50-441
Sample Frequency is: Weekly Results in pCi/m3 +/- 2 Sigma

Location	Sample Type	Collection Dat	I-131
6	Air	1/21/04	< 0.008
6	Air	1/28/04	< 0.006
6	Air	2/4/04	< 0.007
6	Air	2/11/04	< 0.007
6	Air	2/18/04	< 0.008
6	Air	2/25/04	< 0.006
6	Air	3/3/04	< 0.005
6	Air	3/10/04	< 0.004
6	Air	3/17/04	< 0.005
6	Air	3/24/04	< 0.006
6	Air	3/31/04	< 0.005
6	Air	4/7/04	< 0.007
6	Air	4/14/04	< 0.006
6	Air	4/21/04	< 0.004
6	Air	4/28/04	< 0.003
6	Air	5/5/04	< 0.006
6	Air	5/12/04	< 0.005
6	Air	5/19/04	< 0.007
6	Air	5/26/04	< 0.008
6	Air	6/2/04	< 0.007
6	Air	6/9/04	< 0.003
6	Air	6/16/04	< 0.006
6	Air	6/23/04	< 0.005
6	Air	6/30/04	< 0.007
6	Air	7/7/04	< 0.005
6	Air	7/14/04	< 0.005
6	Air	7/21/04	< 0.005
6	Air	7/28/04	< 0.005
6	Air	8/4/04	< 0.006
6	Air	8/11/04	< 0.006
6	Air	8/18/04	< 0.005
6	Air	8/25/04	< 0.005
6	Air	9/1/04	< 0.005
6	Air	9/8/04	< 0.005
6	Air	9/15/04	< 0.005
6	Air	9/22/04	< 0.005
6	Air	9/29/04	< 0.006
6	Air	10/6/04	< 0.007
6	Air	10/13/04	< 0.005
6	Air	10/20/04	< 0.005
6	Air	10/27/04	< 0.008
6	Air	11/3/04	< 0.005
6	Air	11/10/04	< 0.004
6	Air	11/17/04	< 0.006

Air Iodine Detail Report 2004
Radiological Environmental Monitoring Program Detail Data
Perry Nuclear Power Plant, Lake County Ohio Docket no. : 50-440/50-441
Sample Frequency is: Weekly Results in pCi/m3 +/- 2 Sigma

Location	Sample Type	Collection Dat	I-131
6	Air	11/24/04	< 0.010
6	Air	12/1/04	< 0.005
6	Air	12/8/04	< 0.008
6	Air	12/15/04	< 0.005
6	Air	12/22/04	< 0.007
6	Air	12/29/04	< 0.004
7	Air	1/7/04	< 0.004
7	Air	1/14/04	< 0.006
7	Air	1/21/04	< 0.008
7	Air	1/28/04	< 0.006
7	Air	2/4/04	< 0.007
7	Air	2/11/04	< 0.007
7	Air	2/18/04	< 0.008
7	Air	2/25/04	< 0.006
7	Air	3/3/04	< 0.005
7	Air	3/10/04	< 0.004
7	Air	3/17/04	< 0.005
7	Air	3/24/04	< 0.006
7	Air	3/31/04	< 0.005
7	Air	4/7/04	< 0.007
7	Air	4/14/04	< 0.006
7	Air	4/21/04	< 0.004
7	Air	4/28/04	< 0.003
7	Air	5/5/04	< 0.007
7	Air	5/12/04	< 0.005
7	Air	5/19/04	< 0.006
7	Air	5/26/04	< 0.007
7	Air	6/2/04	< 0.007
7	Air	6/9/04	< 0.003
7	Air	6/16/04	< 0.006
7	Air	6/23/04	< 0.005
7	Air	6/30/04	< 0.007
7	Air	7/7/04	< 0.005
7	Air	7/14/04	< 0.005
7	Air	7/21/04	< 0.005
7	Air	7/28/04	< 0.005
7	Air	8/4/04	< 0.006
7	Air	8/11/04	< 0.006
7	Air	8/18/04	< 0.005
7	Air	8/25/04	< 0.005
7	Air	9/1/04	< 0.005
7	Air	9/8/04	< 0.005

Radiological Environmental Monitoring Program Detail Data
Perry Nuclear Power Plant, Lake County Ohio Docket no.: 50-440/50-441
Sample Frequency is: Weekly Results in pCi/m3 +/- 2 Sigma

Location	Sample Type	Collection Dat	I-131
7	Air	9/15/04	< 0.005
7	Air	9/22/04	< 0.005
7	Air	9/29/04	< 0.006
7	Air	10/6/04	< 0.007
7	Air	10/13/04	< 0.010
7	Air	10/20/04	< 0.005
7	Air	10/27/04	< 0.008
7	Air	11/3/04	< 0.005
7	Air	11/10/04	< 0.004
7	Air	11/17/04	< 0.006
7	Air	11/24/04	< 0.010
7	Air	12/1/04	< 0.005
7	Air	12/8/04	< 0.008
7	Air	12/15/04	< 0.005
7	Air	12/22/04	< 0.007
7	Air	12/29/04	< 0.004
35	Air	1/7/04	< 0.008
35	Air	1/14/04	< 0.005
35	Air	1/21/04	< 0.006
35	Air	1/28/04	< 0.009
35	Air	2/4/04	< 0.009
35	Air	2/11/04	< 0.003
35	Air	2/18/04	< 0.003
35	Air	2/25/04	< 0.003
35	Air	3/3/04	< 0.004
35	Air	3/10/04	< 0.003
35	Air	3/17/04	< 0.005
35	Air	3/24/04	< 0.002
35	Air	3/31/04	< 0.007
35	Air	4/7/04	< 0.002
35	Air	4/14/04	< 0.005
35	Air	4/21/04	< 0.006
35	Air	4/28/04	< 0.009
35	Air	5/5/04	< 0.003
35	Air	5/12/04	< 0.003
35	Air	5/19/04	< 0.005
35	Air	5/26/04	< 0.007
35	Air	6/2/04	< 0.005
35	Air	6/9/04	< 0.007
35	Air	6/16/04	< 0.007
35	Air	6/23/04	< 0.006
35	Air	6/30/04	< 0.004

Air Iodine Detail Report 2004

Radiological Environmental Monitoring Program Detail Data
Perry Nuclear Power Plant, Lake County Ohio Docket no. : 50-440/50-441
Sample Frequency is: Weekly Results in pCi/m3 +/- 2 Sigma

Location	Sample Type	Collection Dat	I-131
35	Air	7/7/04	< 0.008
35	Air	7/14/04	< 0.006
35	Air	7/21/04	< 0.005
35	Air	7/28/04	< 0.006
35	Air	8/4/04	< 0.003
35	Air	8/11/04	< 0.005
35	Air	8/18/04	< 0.008
35	Air	8/25/04	< 0.007
35	Air	9/1/04	< 0.007
35	Air	9/8/04	< 0.008
35	Air	9/15/04	< 0.007
35	Air	9/22/04	< 0.010
35	Air	9/29/04	< 0.007
35	Air	10/6/04	< 0.009
35	Air	10/13/04	< 0.006
35	Air	10/20/04	< 0.008
35	Air	10/27/04	< 0.007
35	Air	11/3/04	< 0.005
35	Air	11/10/04	< 0.003
35	Air	11/17/04	< 0.005
35	Air	11/24/04	< 0.016
35	Air	12/1/04	< 0.004
35	Air	12/8/04	< 0.005
35	Air	12/15/04	< 0.005
35	Air	12/22/04	< 0.004
35	Air	12/29/04	< 0.003

Fish Gamma Spectral Detail Report 2004
Radiological Environmental Monitoring Program Detail Data
Perry Nuclear Power Plant, Lake County Ohio Docket no. : 50-440/50-441
Sample Frequency is: Bi-Annually Results in pCi/kg wet +/- 2 Sigma

Location	Sample Type	Collection Date	Co-58 K-40	Co-60 Mn-54	Cs-134 Zn-65	Cs-137	Fe-59
25	yellow perch	6/23/04	< 21.46 1,425.70 +/- 418.20	< 20.83 < 18.75	< 11.85 < 34.38	< 18.82	< 62.10
32	yellow perch	6/23/04	< 21.68 1,216.00 +/- 390.90	< 18.96 < 12.93	< 12.71 < 47.39	< 18.09	< 50.66

Food Products Gamma Spectral Detail Report 2004
Radiological Environmental Monitoring Program Detail Data
Perry Nuclear Power Plant, Lake County Ohio Docket no. : 50-440/50-441
Sample Frequency is: Monthly Results in pCi/kg wet +/- 2 Sigma

Location	Sample Type	Collection Date	Be-7 I-131	Co-58 K-40	Co-60	Cs-134	Cs-137
2	chinese cabbage	7/13/04	< 180.02 < 13.41	< 12.09 3,053.30 +/- 496.90	< 17.16	< 12.95	< 20.94
2	collard greens	7/13/04	< 117.29 < 15.28	< 14.57 3,621.60 +/- 513.00	< 16.05	< 15.64	< 17.50
2	swiss chard	7/13/04	< 192.07 < 26.04	< 17.59 3,826.40 +/- 504.80	< 19.23	< 16.95	< 14.07
2	chinese cabbage	8/12/04	< 167.54 < 20.37	< 11.51 3,443.50 +/- 413.10	< 17.32	< 17.41	< 19.19
2	collard greens	8/12/04	< 122.69 < 18.72	< 10.26 4,160.60 +/- 387.60	< 6.12	< 13.34	< 12.91
2	swiss chard	8/12/04	< 187.87 < 13.03	< 14.19 3,965.00 +/- 546.10	< 16.52	< 13.71	< 16.37
2	chinese cabbage	9/16/04	< 146.05 < 20.05	< 9.98 2,143.20 +/- 382.60	< 13.60	< 16.63	< 10.28
2	collard greens	9/16/04	< 197.26 < 20.17	< 15.12 4,022.90 +/- 508.60	< 12.82	< 11.04	< 14.12
2	swiss chard	9/16/04	< 138.60 < 22.55	< 17.47 4,041.50 +/- 485.60	< 17.78	< 17.53	< 15.02
2	beet greens	10/14/04	< 215.23 < 30.39	< 14.91 6,009.30 +/- 645.80	< 12.22	< 14.71	< 19.94
2	collard greens	10/14/04	< 162.54 < 22.91	< 11.84 3,995.90 +/- 569.30	< 19.41	< 16.20	< 16.52
2	swiss chard	10/14/04	< 179.04 < 24.92	< 12.77 3,418.50 +/- 503.90	< 17.77	< 16.82	< 22.80

Food Products Gamma Spectral Detail Report 2004
Radiological Environmental Monitoring Program Detail Data
Perry Nuclear Power Plant, Lake County Ohio Docket no. : 50-440/50-441
Sample Frequency is: Monthly Results in pCi/kg wet +/- 2 Sigma

Location	Sample Type	Collection Date	Be-7 I-131	Co-58 K-40	Co-60	Cs-134	Cs-137
2	collard greens	11/9/04	< 217.51 < 28.32	< 11.30 2,902.00 +/- 454.00	< 23.85	< 16.24	< 9.87
2	swiss chard	11/9/04	< 242.33 < 38.78	< 14.26 5,947.90 +/- 764.50	< 22.25	< 21.37	< 17.63
16	chinese cabbage	7/13/04	< 172.67 < 30.47	< 16.40 4,489.60 +/- 520.90	< 24.54	< 26.26	< 20.28
16	collard greens	7/13/04	< 165.90 < 21.31	< 14.08 4,579.40 +/- 588.80	< 18.92	< 20.07	< 15.21
16	turnip greens	7/13/04	< 152.10 < 14.15	< 11.33 4,339.70 +/- 488.40	< 11.86	< 19.33	< 19.50
16	chinese cabbage	8/12/04	< 119.72 < 16.27	< 9.83 3,508.10 +/- 427.40	< 17.45	< 15.55	< 18.30
16	collard greens	8/12/04	< 144.89 < 16.84	< 9.28 4,778.60 +/- 529.60	< 20.43	< 19.81	< 21.19
16	turnip greens	8/12/04	< 129.35 < 18.60	< 10.94 5,016.20 +/- 427.80	< 7.46	< 15.42	< 15.26
16	chinese cabbage	9/16/04	< 121.41 < 19.22	< 10.06 2,900.20 +/- 425.20	< 11.98	< 17.65	< 13.81
16	collard greens	9/16/04	< 174.47 < 24.59	< 7.65 3,878.90 +/- 498.60	< 12.67	< 12.06	< 15.68
16	turnip greens	9/16/04	< 198.62 < 11.86	< 13.44 5,653.05 +/- 403.42	< 17.63	< 9.53	< 15.77
16	collard greens	10/14/04	< 163.75 < 17.34	< 9.48 3,790.40 +/- 590.40	< 9.59	< 13.50	< 11.76

Food Products Gamma Spectral Detail Report 2004
Radiological Environmental Monitoring Program Detail Data
Perry Nuclear Power Plant, Lake County Ohio Docket no. : 50-440/50-441
Sample Frequency is: Monthly Results in pCi/kg wet +/- 2 Sigma

Location	Sample Type	Collection Date	Be-7 I-131	Co-58 K-40	Co-60	Cs-134	Cs-137
16	turnip greens	10/14/04	450.95 +/- 265.80 < 18.09	< 10.77 6,161.50 +/- 517.60	< 11.07	< 16.26	< 13.99
16	collard greens	11/9/04	< 237.30 < 36.65	< 16.12 3,884.60 +/- 542.00	< 24.03	< 25.70	< 11.04
16	turnip greens	11/9/04	372.74 +/- 154.00 < 35.65	< 12.45 4,989.10 +/- 685.30	< 14.18	< 13.47	< 20.46
20	chinese cabbage	8/12/04	< 143.46 < 19.93	< 12.58 3,021.40 +/- 398.60	< 6.99	< 18.35	< 17.56
20	collard greens	8/12/04	< 160.74 < 19.20	< 23.94 3,559.40 +/- 708.90	< 17.09	< 24.73	< 24.02
20	turnip greens	8/12/04	253.56 +/- 100.60 < 16.16	< 5.65 3,832.80 +/- 385.90	< 8.44	< 8.05	< 12.00
20	chinese cabbage	9/16/04	< 130.02 < 16.32	< 9.10 3,045.40 +/- 343.70	< 7.74	< 16.22	< 9.98
20	collard greens	9/16/04	< 111.39 < 19.77	< 7.20 4,566.70 +/- 381.20	< 10.02	< 12.45	< 15.07
20	turnip greens	9/16/04	< 167.23 < 25.80	< 10.89 4,733.60 +/- 420.40	< 9.48	< 15.13	< 18.82
20	collard greens	10/14/04	< 143.20 < 18.93	< 13.69 3,650.80 +/- 409.80	< 12.68	< 12.61	< 12.27
20	swiss chard	10/14/04	< 186.04 < 16.26	< 8.81 4,496.60 +/- 446.50	< 11.86	< 11.80	< 15.01
20	turnip greens	10/14/04	399.36 +/- 205.50 < 23.04	< 11.38 4,680.50 +/- 454.00	< 10.77	< 9.40	< 15.21

Food Products Gamma Spectral Detail Report 2004
Radiological Environmental Monitoring Program Detail Data
Perry Nuclear Power Plant, Lake County Ohio Docket no. : 50-440/50-441
Sample Frequency is: Monthly Results in pCi/kg wet +/- 2 Sigma

Location	Sample Type	Collection Date	Be-7 I-131	Co-58 K-40	Co-60	Cs-134	Cs-137
20	collard greens	11/9/04	< 178.65 < 25.27	< 12.28 4,648.00 +/- 431.00	< 10.97	< 12.97	< 15.50
20	turnip greens	11/9/04	735.79 +/- 318.50 < 34.21	< 16.84 5,606.00 +/- 759.40	< 21.36	< 32.95	< 15.88
37	chinese cabbage	7/13/04	< 119.01 < 18.79	< 10.89 2,612.80 +/- 419.50	< 17.11	< 15.70	< 18.36
37	collard greens	7/13/04	< 108.27 < 21.19	< 16.02 3,887.80 +/- 482.20	< 15.36	< 20.89	< 22.61
37	turnip greens	7/13/04	< 146.85 < 17.95	< 13.16 4,263.90 +/- 457.60	< 12.78	< 12.91	< 17.80
37	chinese cabbage	8/12/04	< 147.04 < 18.28	< 12.38 1,981.50 +/- 358.00	< 17.09	< 16.35	< 14.02
37	collard greens	8/12/04	< 131.82 < 16.20	< 15.34 3,529.80 +/- 529.20	< 13.06	< 11.44	< 16.65
37	swiss chard	8/12/04	< 150.97 < 25.86	< 10.64 3,807.80 +/- 461.00	< 13.50	< 15.33	< 18.21
37	chinese cabbage	9/16/04	< 115.14 < 10.83	< 8.08 4,183.20 +/- 399.00	< 9.76	< 13.91	< 13.46
37	collard greens	9/16/04	< 145.07 < 22.63	< 13.15 2,663.00 +/- 403.20	< 14.07	< 8.46	< 17.88
37	swiss chard	9/16/04	< 132.45 < 19.39	< 6.28 3,209.10 +/- 321.40	< 7.00	< 10.98	< 9.44
37	chinese cabbage	10/14/04	< 153.72 < 28.44	< 13.85 2,350.70 +/- 463.30	< 18.80	< 26.83	< 23.20

Food Products Gamma Spectral Detail Report 2004
Radiological Environmental Monitoring Program Detail Data
Perry Nuclear Power Plant, Lake County Ohio Docket no. : 50-440/50-441
Sample Frequency is: Monthly Results in pCi/kg wet +/- 2 Sigma

Location	Sample Type	Collection Date	Be-7 I-131	Co-58 K-40	Co-60	Cs-134	Cs-137
37	collard greens	10/14/04	< 157.55 < 13.26	< 13.05 4,128.80 +/- 454.60	< 12.31	< 20.02	< 7.99
37	turnip greens	10/14/04	< 237.69 < 33.16	< 26.39 4,913.00 +/- 621.10	< 10.06	< 24.87	< 28.02
37	chinese cabbage	11/9/04	< 166.66 < 22.47	< 16.44 3,166.70 +/- 545.70	< 24.87	< 25.26	< 12.85
37	collard greens	11/9/04	< 187.51 < 34.19	< 14.41 3,905.00 +/- 554.50	< 15.76	< 22.49	< 24.97
37	swiss chard	11/9/04	410.62 +/- 183.10 < 12.38	< 10.70 4,895.90 +/- 456.40	< 10.94	< 13.27	< 11.54
70	chinese cabbage	7/13/04	< 145.26 < 16.90	< 8.69 3,359.90 +/- 483.40	< 17.28	< 17.06	< 19.03
70	collard greens	7/13/04	< 111.29 < 8.08	< 7.32 4,482.40 +/- 401.40	< 8.27	< 8.73	< 10.08
70	swiss chard	7/13/04	< 172.35 < 27.63	< 19.82 6,205.60 +/- 655.00	< 22.13	< 21.73	< 18.79
70	collard greens	8/12/04	< 103.64 < 11.48	< 8.68 3,994.30 +/- 319.80	< 6.64	< 11.22	< 9.76
70	swiss chard	8/12/04	< 165.54 < 13.32	< 13.22 4,062.20 +/- 505.40	< 12.11	< 12.05	< 16.48
70	turnip greens	8/12/04	< 146.60 < 13.42	< 14.18 4,279.70 +/- 487.10	< 16.13	< 14.81	< 15.50
70	collard greens	9/16/04	< 109.39 < 24.30	< 4.43 3,634.90 +/- 416.90	< 8.84	< 13.10	< 10.76

Food Products Gamma Spectral Detail Report 2004
Radiological Environmental Monitoring Program Detail Data
Perry Nuclear Power Plant, Lake County Ohio Docket no. : 50-440/50-441
Sample Frequency is: Monthly Results in pCi/kg wet +/- 2 Sigma

Location	Sample Type	Collection Date	Be-7 I-131	Co-58 K-40	Co-60	Cs-134	Cs-137
70	swiss chard	9/16/04	237.17 +/- 139.80 < 27.32	< 15.88 4,641.60 +/- 473.50	< 12.94	< 14.04	< 11.63
70	turnip greens	9/16/04	422.33 +/- 192.90 < 20.79	< 12.04 4,743.80 +/- 496.80	< 7.53	< 16.53	< 17.93
70	collard greens	10/14/04	< 101.79 < 25.66	< 13.87 3,284.70 +/- 399.80	< 7.13	< 13.30	< 12.36
70	swiss chard	10/14/04	< 246.47 < 24.15	< 10.81 5,854.60 +/- 496.83	< 10.58	< 19.08	< 24.94
70	turnip greens	10/14/04	624.67 +/- 194.10 < 27.58	< 18.27 5,241.60 +/- 710.50	< 20.46	< 29.11	< 19.63
70	collard greens	11/9/04	< 179.49 < 32.12	< 17.63 3,554.70 +/- 503.80	< 13.62	< 12.04	< 14.58
70	swiss chard	11/9/04	401.59 +/- 208.60 < 26.40	< 11.65 6,998.80 +/- 779.10	< 17.41	< 26.59	< 23.58
70	turnip greens	11/9/04	606.42 +/- 153.20 < 28.61	< 13.33 5,911.20 +/- 472.10	< 13.67	< 14.84	< 13.13

Milk Gamma Spectral Detail Report 2004
Radiological Environmental Monitoring Program Detail Data
Perry Nuclear Power Plant, Lake County Ohio Docket no. : 50-440/50-441
Sample Frequency is: Bi-Monthly Results in pCi/L +/- 2 Sigma

Location	Sample Type	Collection Date	Ba-140	Cs-134	Cs-137	K-40	La-140
41	Milk	8/16/04	< 39	< 3	< 5	1,722 +/- 135	< 8
41	Milk	9/7/04	< 29	< 5	< 5	1,897 +/- 174	< 11
41	Milk	9/20/04	< 40	< 7	< 6	1,879 +/- 183	< 10
41	Milk	10/4/04	< 28	< 5	< 3	1,711 +/- 187	< 6
41	Milk	10/18/04	< 23	< 3	< 5	1,541 +/- 181	< 6
41	Milk	11/1/04	< 21	< 4	< 4	1,818 +/- 125	< 2
41	Milk	12/6/04	< 33	< 3	< 4	1,816 +/- 142	< 5
51	Milk	1/5/04	< 15	< 3	< 4	1,251 +/- 115	< 3
51	Milk	2/2/04	< 14	< 4	< 3	1,375 +/- 120	< 4
51	Milk	3/1/04	< 15	< 5	< 3	1,336 +/- 127	< 3
51	Milk	4/5/04	< 23	< 4	< 4	1,393 +/- 117	< 3
51	Milk	4/19/04	< 21	< 8	< 5	1,440 +/- 187	< 5

Milk Gamma Spectral Detail Report 2004
Radiological Environmental Monitoring Program Detail Data
Perry Nuclear Power Plant, Lake County Ohio Docket no. : 50-440/50-441
Sample Frequency is: Bi-Monthly Results in pCi/L +/- 2 Sigma

Location	Sample Type	Collection Date	Ba-140	Cs-134	Cs-137	K-40	La-140
51	Milk	5/3/04	< 24	< 6	< 7	1,253 +/- 180	< 6
51	Milk	5/18/04	< 18	< 3	< 4	1,519 +/- 128	< 3
51	Milk	6/7/04	< 26	< 6	< 5	1,428 +/- 174	< 6
51	Milk	6/21/04	< 27	< 5	< 5	1,381 +/- 180	< 4
51	Milk	7/6/04	< 30	< 6	< 4	1,373 +/- 122	< 5
51	Milk	7/19/04	< 25	< 6	< 6	1,063 +/- 149	< 8
51	Milk	8/2/04	< 41	< 4	< 4	1,288 +/- 111	< 9
51	Milk	8/16/04	< 26	< 4	< 4	1,370 +/- 120	< 8
51	Milk	9/7/04	< 43	< 4	< 4	1,260 +/- 117	< 6
51	Milk	9/20/04	< 23	< 4	< 4	1,419 +/- 104	< 6
51	Milk	10/4/04	< 20	< 4	< 3	1,299 +/- 126	< 4
51	Milk	10/18/04	< 19	< 4	< 4	1,186 +/- 117	< 3

Milk Gamma Spectral Detail Report 2004
Radiological Environmental Monitoring Program Detail Data
Perry Nuclear Power Plant, Lake County Ohio Docket no. : 50-440/50-441
Sample Frequency is: Bi-Monthly Results in pCi/L +/- 2 Sigma

Location	Sample Type	Collection Date	Ba-140	Cs-134	Cs-137	K-40	La-140
51	Milk	11/1/04	< 19	< 4	< 3	1,458 +/- 113	< 5
51	Milk	12/6/04	< 19	< 5	< 4	1,311 +/- 109	< 9
61	Milk	5/3/04	< 12	< 4	< 4	1,826 +/- 144	< 4
61	Milk	5/18/04	< 16	< 5	< 6	1,643 +/- 191	< 8
61	Milk	6/7/04	< 33	< 4	< 5	1,654 +/- 177	< 5
61	Milk	6/21/04	< 34	< 8	< 5	1,885 +/- 202	< 3
61	Milk	7/6/04	< 29	< 5	< 6	1,515 +/- 199	< 7
61	Milk	8/2/04	< 26	< 4	< 4	1,683 +/- 126	< 7
61	Milk	8/16/04	< 21	< 9	< 6	1,798 +/- 202	< 3
61	Milk	9/7/04	< 38	< 6	< 5	1,920 +/- 201	< 5
61	Milk	9/20/04	< 40	< 6	< 6	1,681 +/- 189	< 8

Milk Iodine Detail Report 2004
Radiological Environmental Monitoring Program Detail Data
Perry Nuclear Power Plant, Lake County Ohio Docket no. : 50-440/50-441
Sample Frequency is: Bi-Monthly Results in pCi/L +/- 2 Sigma

Location	Sample Type	Collection Dat	I-131
41	Milk	8/16/04	< 0.28
41	Milk	9/7/04	< 0.30
41	Milk	9/20/04	< 0.33
41	Milk	10/4/04	< 0.27
41	Milk	10/18/04	< 0.21
41	Milk	11/1/04	< 0.20
41	Milk	12/6/04	< 0.22
51	Milk	1/5/04	< 0.29
51	Milk	2/2/04	< 0.31
51	Milk	3/1/04	< 0.24
51	Milk	4/5/04	< 0.24
51	Milk	4/19/04	< 0.21
51	Milk	5/3/04	< 0.15
51	Milk	5/18/04	< 0.25
51	Milk	6/7/04	< 0.42
51	Milk	6/21/04	< 0.35
51	Milk	7/6/04	< 0.43
51	Milk	7/19/04	< 0.30
51	Milk	8/2/04	< 0.27
51	Milk	8/16/04	< 0.20
51	Milk	9/7/04	< 0.35
51	Milk	9/20/04	< 0.35
51	Milk	10/4/04	< 0.25
51	Milk	10/18/04	< 0.16
51	Milk	11/1/04	< 0.21
51	Milk	12/6/04	< 0.31
61	Milk	4/19/04	
61	Milk	5/3/04	< 0.25
61	Milk	5/18/04	< 0.23
61	Milk	6/7/04	< 0.19
61	Milk	6/21/04	< 0.35
61	Milk	7/6/04	< 0.20
61	Milk	7/19/04	
61	Milk	8/2/04	< 0.28
61	Milk	8/16/04	< 0.26
61	Milk	9/7/04	< 0.33
61	Milk	9/20/04	< 0.38

Sediment Gamma Spectral Detail Report 2004
Radiological Environmental Monitoring Program Detail Data
Perry Nuclear Power Plant, Lake County Ohio Docket no. : 50-440/50-441
Sample Frequency is: Bi-Annually Results in pCi/kg dry +/- 2 Sigma

Location	Sample Type	Collection Date	Co-58	Co-60	Cs-134	Cs-137	K-40
25	Sediment	5/17/04	< 20.96	< 13.87	< 30.12	598.01 +/- 40.29	16,106.00 +/- 600.00
25	Sediment	9/21/04	< 3.44	< 22.86	< 42.99	LLD	14,153.00 +/- 722.60
26	Sediment	5/17/04	< 19.85	< 12.78	< 29.56	138.40 +/- 24.89	15,868.00 +/- 504.44
26	Sediment	9/21/04	< 22.14	< 17.73	< 35.02	< 23.82	11,963.00 +/- 592.20
27	Sediment	5/17/04	< 24.58	< 13.34	< 32.60	187.86 +/- 45.20	12,506.00 +/- 685.80
27	Sediment	9/21/04	< 27.56	< 20.58	< 35.62	191.39 +/- 45.06	14,664.00 +/- 721.60
32	Sediment	5/17/04	< 34.18	< 27.33	< 37.43	900.78 +/- 59.09	23,181.00 +/- 791.00
32	Sediment	9/21/04	< 44.64	< 28.07	< 66.57	896.04 +/- 97.15	24,663.00 +/- 1,336.00
63	Sediment	5/18/04	< 22.02	< 15.05	< 25.92	< 19.36	9,340.50 +/- 595.50
63	Sediment	9/21/04	< 23.73	< 7.25	< 26.26	< 16.99	9,666.50 +/- 504.70

Sediment Gamma Spectral Detail Report 2004
Radiological Environmental Monitoring Program Detail Data
Perry Nuclear Power Plant, Lake County Ohio Docket no. : 50-440/50-441
Sample Frequency is: Bi-Annually Results in pCi/kg dry +/- 2 Sigma

Location	Sample Type	Collection Date	Co-58	Co-60	Cs-134	Cs-137	K-40
64	Sediment	9/21/04	< 19.27	< 13.84	< 25.81	< 10.87	10,306.00 +/- 508.30
65	Sediment	5/18/04	< 22.45	< 13.19	< 24.34	< 19.21	9,046.90 +/- 481.90
65	Sediment	9/21/04	< 21.85	< 9.65	< 24.95	< 14.22	9,792.30 +/- 565.00

TLD Gamma Dose Detail Report 2004

Radiological Environmental Monitoring Program Detail Data
Perry Nuclear Power Plant, Lake County Ohio Docket no. : 50-440/50-441
Sample Frequency is: Quarterly

Location	Sample Type	Collection Period			Exposure		
1	TLD	1/6/04	to	4/1/04	12.72	+/-	0.70
1	TLD	4/1/04	to	7/8/04	14.10	+/-	0.55
1	TLD	7/8/04	to	10/6/04	15.52	+/-	0.97
1	TLD	10/6/04	to	1/5/05	15.42	+/-	1.00
3	TLD	1/6/04	to	4/1/04	13.73	+/-	0.63
3	TLD	4/1/04	to	7/8/04	14.36	+/-	0.54
3	TLD	7/8/04	to	10/6/04	15.64	+/-	0.64
3	TLD	10/6/04	to	1/5/05	15.68	+/-	0.80
4	TLD	1/6/04	to	4/1/04	13.08	+/-	0.57
4	TLD	4/1/04	to	7/8/04	14.41	+/-	0.63
4	TLD	7/8/04	to	10/6/04	16.06	+/-	0.73
4	TLD	10/6/04	to	1/5/05	16.87	+/-	0.53
5	TLD	1/6/04	to	4/1/04	12.20	+/-	0.45
5	TLD	4/1/04	to	7/8/04	14.44	+/-	0.52
5	TLD	7/8/04	to	10/6/04	14.81	+/-	0.56
5	TLD	10/6/04	to	1/5/05	16.03	+/-	0.47
6	TLD	1/6/04	to	4/1/04	14.19	+/-	0.66
6	TLD	4/1/04	to	7/8/04	16.87	+/-	1.18
6	TLD	7/8/04	to	10/6/04	15.90	+/-	0.75
6	TLD	10/6/04	to	1/5/05	16.74	+/-	0.53
7	TLD	1/6/04	to	4/1/04	12.19	+/-	0.48
7	TLD	4/1/04	to	7/8/04	14.92	+/-	0.31
7	TLD	7/8/04	to	10/6/04	15.77	+/-	0.68
7	TLD	10/6/04	to	1/5/05	16.83	+/-	0.50
8	TLD	1/6/04	to	4/1/04	11.08	+/-	0.47
8	TLD	4/1/04	to	7/8/04	13.33	+/-	0.42
8	TLD	7/8/04	to	10/6/04	14.25	+/-	0.53
8	TLD	10/6/04	to	1/5/05	14.65	+/-	0.45
9	TLD	1/6/04	to	4/1/04	11.76	+/-	0.42
9	TLD	4/1/04	to	7/8/04	13.85	+/-	0.54
9	TLD	7/8/04	to	10/6/04	14.75	+/-	0.56
9	TLD	10/6/04	to	1/5/05	14.04	+/-	0.52
10	TLD	1/6/04	to	4/1/04	14.83	+/-	0.60
10	TLD	4/1/04	to	7/8/04	17.91	+/-	0.78
10	TLD	7/8/04	to	10/6/04	18.21	+/-	0.55

TLD Gamma Dose Detail Report

Radiological Environmental Monitoring Program Detail Data

Perry Nuclear Power Plant, Lake County Ohio Docket no.: 50-440/50-441

Sample Frequency is: Quarterly

Location	Sample Type	Collection Period			Exposure		
10	TLD	10/6/04	to	1/5/05	17.34	+/-	0.88
11	TLD	1/6/04	to	4/1/04	13.77	+/-	1.05
11	TLD	4/1/04	to	7/8/04	14.79	+/-	0.46
11	TLD	7/8/04	to	10/6/04	17.90	+/-	0.49
11	TLD	10/6/04	to	1/5/05	16.55	+/-	0.48
12	TLD	1/6/04	to	4/1/04	13.98	+/-	0.69
12	TLD	4/1/04	to	7/8/04	15.64	+/-	0.62
12	TLD	7/8/04	to	10/6/04	17.17	+/-	0.82
12	TLD	10/6/04	to	1/5/05	16.44	+/-	0.50
13	TLD	1/6/04	to	4/1/04	14.17	+/-	0.41
13	TLD	4/1/04	to	7/8/04	15.69	+/-	0.56
13	TLD	7/8/04	to	10/6/04	16.77	+/-	0.61
13	TLD	10/6/04	to	1/5/05	15.91	+/-	0.74
14	TLD	1/6/04	to	4/1/04	12.94	+/-	0.56
14	TLD	4/1/04	to	7/8/04	14.96	+/-	0.48
14	TLD	7/8/04	to	10/6/04	15.34	+/-	0.58
14	TLD	10/6/04	to	1/5/05	15.53	+/-	0.59
15	TLD	1/6/04	to	4/1/04	12.77	+/-	0.76
15	TLD	4/1/04	to	7/8/04	11.21	+/-	0.48
15	TLD	7/8/04	to	10/6/04	15.07	+/-	0.75
15	TLD	10/6/04	to	1/5/05	11.24	+/-	0.59
21	TLD	1/6/04	to	4/1/04	16.00	+/-	0.48
21	TLD	4/1/04	to	7/8/04	18.22	+/-	0.73
21	TLD	7/8/04	to	10/6/04	18.90	+/-	0.55
21	TLD	10/6/04	to	1/5/05	18.16	+/-	0.59
23	TLD	1/6/04	to	4/1/04	16.74	+/-	0.38
23	TLD	4/1/04	to	7/8/04	17.61	+/-	0.30
23	TLD	7/8/04	to	10/6/04	19.67	+/-	0.66
23	TLD	10/6/04	to	1/5/05	18.26	+/-	0.50
24	TLD	1/6/04	to	4/1/04	14.13	+/-	0.41
24	TLD	4/1/04	to	7/8/04	15.60	+/-	0.60
24	TLD	7/8/04	to	10/6/04	16.40	+/-	0.61
24	TLD	10/6/04	to	1/5/05	16.63	+/-	0.62
29	TLD	1/6/04	to	4/1/04	17.55	+/-	0.69
29	TLD	4/1/04	to	7/8/04	20.37	+/-	0.65

TLD Gamma Dose Detail Report 2004

Radiological Environmental Monitoring Program Detail Data
Perry Nuclear Power Plant, Lake County Ohio Docket no. : 50-440/50-441
Sample Frequency is: Quarterly

Location	Sample Type	Collection Period			Exposure		
29	TLD	7/8/04	to	10/6/04	20.59	+/-	0.79
29	TLD	10/6/04	to	1/5/05	20.62	+/-	0.76
30	TLD	1/6/04	to	4/1/04	15.55	+/-	0.75
30	TLD	4/1/04	to	7/8/04	18.05	+/-	0.64
30	TLD	7/8/04	to	10/6/04	18.98	+/-	0.91
30	TLD	10/6/04	to	1/5/05	19.15	+/-	0.68
31	TLD	1/6/04	to	4/1/04	15.66	+/-	0.50
31	TLD	4/1/04	to	7/8/04	19.70	+/-	0.45
31	TLD	7/8/04	to	10/6/04	18.88	+/-	0.92
31	TLD	10/6/04	to	1/5/05	19.76	+/-	0.60
33	TLD	1/6/04	to	4/1/04	17.28	+/-	0.71
33	TLD	4/1/04	to	7/8/04	20.27	+/-	0.61
33	TLD	7/8/04	to	10/6/04	20.30	+/-	1.06
33	TLD	10/6/04	to	1/5/05	20.15	+/-	0.69
35	TLD	1/6/04	to	4/1/04	12.11	+/-	0.50
35	TLD	4/1/04	to	7/8/04	14.72	+/-	0.50
35	TLD	7/8/04	to	10/6/04	14.16	+/-	0.73
35	TLD	10/6/04	to	1/5/05	15.13	+/-	0.50
36	TLD	1/6/04	to	4/1/04	16.17	+/-	0.78
36	TLD	4/1/04	to	7/8/04	18.48	+/-	0.77
36	TLD	7/8/04	to	10/6/04	19.60	+/-	0.81
36	TLD	10/6/04	to	1/5/05	18.80	+/-	0.73
53	TLD	1/6/04	to	4/1/04	13.09	+/-	0.56
53	TLD	4/1/04	to	7/8/04	16.52	+/-	0.39
53	TLD	7/8/04	to	10/6/04	15.94	+/-	0.57
53	TLD	10/6/04	to	1/5/05	16.73	+/-	0.45
54	TLD	1/6/04	to	4/1/04	13.13	+/-	0.96
54	TLD	4/1/04	to	7/8/04	15.94	+/-	0.35
54	TLD	7/8/04	to	10/6/04	15.39	+/-	0.97
54	TLD	10/6/04	to	1/5/05	15.77	+/-	0.52
55	TLD	1/6/04	to	4/1/04	13.62	+/-	1.27
55	TLD	4/1/04	to	7/8/04	17.30	+/-	0.54
55	TLD	7/8/04	to	10/6/04	16.33	+/-	1.41
55	TLD	10/6/04	to	1/5/05	16.92	+/-	0.68
56	TLD	1/6/04	to	4/1/04	13.12	+/-	0.55

TLD Gamma Dose Detail Report 2004
Radiological Environmental Monitoring Program Detail Data
Perry Nuclear Power Plant, Lake County Ohio Docket no. : 50-440/50-441
Sample Frequency is: Quarterly

Location	Sample Type	Collection Period			Exposure		
56	TLD	4/1/04	to	7/8/04	15.32	+/-	0.78
56	TLD	7/8/04	to	10/6/04	16.23	+/-	0.63
56	TLD	10/6/04	to	1/5/05	16.20	+/-	0.59
58	TLD	1/6/04	to	4/1/04	12.98	+/-	0.56
58	TLD	4/1/04	to	7/8/04	15.28	+/-	0.60
58	TLD	7/8/04	to	10/6/04	14.59	+/-	0.59
58	TLD	10/6/04	to	1/5/05	14.49	+/-	0.66

TLD Gamma Dose Detail Report 2004

Radiological Environmental Monitoring Program Detail Data
Perry Nuclear Power Plant, Lake County Ohio Docket no. : 50-440/50-441
Sample Frequency is: Quarterly

Location	Sample Type	Collection Period			Exposure		
1	TLB	1/6/04	to	4/1/04	14.01	+/-	1.16
1	TLB	4/1/04	to	7/8/04	14.69	+/-	0.68
1	TLB	7/8/04	to	10/6/04	14.22	+/-	0.85
1	TLB	10/6/04	to	1/5/05	15.35	+/-	1.04
3	TLB	1/6/04	to	4/1/04	15.11	+/-	0.50
3	TLB	4/1/04	to	7/8/04	12.04	+/-	0.49
3	TLB	7/8/04	to	10/6/04	15.39	+/-	0.73
3	TLB	10/6/04	to	1/5/05	12.78	+/-	0.63
4	TLB	1/6/04	to	4/1/04	14.72	+/-	0.81
4	TLB	4/1/04	to	7/8/04	15.80	+/-	0.60
4	TLB	7/8/04	to	10/6/04	15.52	+/-	0.48
4	TLB	10/6/04	to	1/5/05	17.53	+/-	0.77
5	TLB	1/6/04	to	4/1/04	14.30	+/-	0.42
5	TLB	4/1/04	to	7/8/04	14.82	+/-	0.60
5	TLB	7/8/04	to	10/6/04	14.86	+/-	0.49
5	TLB	10/6/04	to	1/5/05	17.10	+/-	1.66
6	TLB	1/6/04	to	4/1/04	15.85	+/-	0.29
6	TLB	4/1/04	to	7/8/04	16.71	+/-	0.57
6	TLB	7/8/04	to	10/6/04	15.68	+/-	0.65
6	TLB	10/6/04	to	1/5/05	16.45	+/-	0.72
7	TLB	1/6/04	to	4/1/04	14.70	+/-	0.56
7	TLB	4/1/04	to	7/8/04	16.01	+/-	0.81
7	TLB	7/8/04	to	10/6/04	16.11	+/-	0.37
7	TLB	10/6/04	to	1/5/05	18.25	+/-	0.99
8	TLB	1/6/04	to	4/1/04	13.63	+/-	0.58
8	TLB	4/1/04	to	7/8/04	14.52	+/-	0.46
8	TLB	7/8/04	to	10/6/04	15.28	+/-	0.52
8	TLB	10/6/04	to	1/5/05	16.63	+/-	0.92
9	TLB	1/6/04	to	4/1/04	13.52	+/-	0.44
9	TLB	4/1/04	to	7/8/04	14.46	+/-	0.68
9	TLB	7/8/04	to	10/6/04	14.13	+/-	0.56
9	TLB	10/6/04	to	1/5/05	15.86	+/-	0.82
10	TLB	1/6/04	to	4/1/04	16.10	+/-	0.51
10	TLB	4/1/04	to	7/8/04	19.18	+/-	0.44
10	TLB	7/8/04	to	10/6/04	17.05	+/-	0.49
10	TLB	10/6/04	to	1/5/05	19.66	+/-	0.63

LD [illegible]na [illegible] Detail [illegible]port

Radiological Environmental Monitoring Program Detail Data

Perry Nuclear Power Plant, Lake County Ohio Docket no. : 50-440/50-441

Sample Frequency is: Quarterly

Location	Sample Type	Collection Period			Exposure		
11	TLB	1/6/04	to	4/1/04	12.88	+/-	0.35
11	TLB	4/1/04	to	7/8/04	16.33	+/-	0.33
11	TLB	7/8/04	to	10/6/04	15.00	+/-	0.41
11	TLB	10/6/04	to	1/5/05	18.55	+/-	0.81
12	TLB	1/6/04	to	4/1/04	16.08	+/-	0.48
12	TLB	4/1/04	to	7/8/04	16.51	+/-	0.50
12	TLB	7/8/04	to	10/6/04	17.40	+/-	0.46
12	TLB	10/6/04	to	1/5/05	18.03	+/-	0.83
13	TLB	1/6/04	to	4/1/04	14.46	+/-	0.29
13	TLB	4/1/04	to	7/8/04	15.84	+/-	0.72
13	TLB	7/8/04	to	10/6/04	15.20	+/-	0.44
13	TLB	10/6/04	to	1/5/05	17.10	+/-	0.90
14	TLB	1/6/04	to	4/1/04	12.31	+/-	0.54
14	TLB	4/1/04	to	7/8/04	15.36	+/-	0.50
14	TLB	7/8/04	to	10/6/04	13.07	+/-	0.40
14	TLB	10/6/04	to	1/5/05	16.12	+/-	0.93
15	TLB	1/6/04	to	4/1/04	11.77	+/-	0.55
15	TLB	4/1/04	to	7/8/04	14.45	+/-	0.79
15	TLB	7/8/04	to	10/6/04	12.57	+/-	0.64
15	TLB	10/6/04	to	1/5/05	15.25	+/-	0.95
21	TLB	1/6/04	to	4/1/04	16.34	+/-	0.54
21	TLB	4/1/04	to	7/8/04	18.19	+/-	0.82
21	TLB	7/8/04	to	10/6/04	17.13	+/-	0.61
21	TLB	10/6/04	to	1/5/05	18.76	+/-	1.06
23	TLB	1/6/04	to	4/1/04	14.36	+/-	0.73
23	TLB	4/1/04	to	7/8/04	17.07	+/-	0.60
23	TLB	7/8/04	to	10/6/04	15.37	+/-	0.86
23	TLB	10/6/04	to	1/5/05	18.53	+/-	1.04
24	TLB	1/6/04	to	4/1/04	14.77	+/-	0.84
24	TLB	4/1/04	to	7/8/04	14.96	+/-	0.67
24	TLB	7/8/04	to	10/6/04	15.89	+/-	0.82
24	TLB	10/6/04	to	1/5/05	16.35	+/-	0.80
29	TLB	1/6/04	to	4/1/04	18.80	+/-	0.51
29	TLB	4/1/04	to	7/8/04	21.01	+/-	0.81
29	TLB	7/8/04	to	10/6/04	20.13	+/-	0.58

TLD Gamma Dose Detail Report 2004

Radiological Environmental Monitoring Program Detail Data
Perry Nuclear Power Plant, Lake County Ohio Docket no. : 50-440/50-441
Sample Frequency is: Quarterly

Location	Sample Type	Collection Period			Exposure		
29	TLB	10/6/04	to	1/5/05	22.13	+/-	1.19
30	TLB	1/6/04	to	4/1/04	17.41	+/-	0.57
30	TLB	4/1/04	to	7/8/04	18.51	+/-	1.16
30	TLB	7/8/04	to	10/6/04	18.71	+/-	0.70
30	TLB	10/6/04	to	1/5/05	19.69	+/-	0.75
31	TLB	1/6/04	to	4/1/04	18.18	+/-	0.54
31	TLB	4/1/04	to	7/8/04	20.07	+/-	0.40
31	TLB	7/8/04	to	10/6/04	19.69	+/-	0.93
31	TLB	10/6/04	to	1/5/05	21.08	+/-	0.63
33	TLB	1/6/04	to	4/1/04	19.61	+/-	0.42
33	TLB	4/1/04	to	7/8/04	21.50	+/-	0.50
33	TLB	7/8/04	to	10/6/04	20.42	+/-	0.89
33	TLB	10/6/04	to	1/5/05	22.37	+/-	0.66
35	TLB	1/6/04	to	4/1/04	14.24	+/-	0.51
35	TLB	4/1/04	to	7/8/04	15.30	+/-	0.56
35	TLB	7/8/04	to	10/6/04	15.06	+/-	0.44
35	TLB	10/6/04	to	1/5/05	15.69	+/-	0.66
36	TLB	1/6/04	to	4/1/04	18.68	+/-	0.58
36	TLB	4/1/04	to	7/8/04	20.33	+/-	0.89
36	TLB	7/8/04	to	10/6/04	19.32	+/-	0.54
36	TLB	10/6/04	to	1/5/05	20.88	+/-	0.94
53	TLB	1/6/04	to	4/1/04	15.51	+/-	0.41
53	TLB	4/1/04	to	7/8/04	16.79	+/-	0.64
53	TLB	7/8/04	to	10/6/04	16.53	+/-	0.49
53	TLB	10/6/04	to	1/5/05	18.43	+/-	0.80
54	TLB	1/6/04	to	4/1/04	16.81	+/-	0.50
54	TLB	4/1/04	to	7/8/04	17.53	+/-	0.69
54	TLB	7/8/04	to	10/6/04	17.40	+/-	0.61
54	TLB	10/6/04	to	1/5/05	17.98	+/-	1.07
55	TLB	1/6/04	to	4/1/04	15.89	+/-	0.33
55	TLB	4/1/04	to	7/8/04	17.38	+/-	0.56
55	TLB	7/8/04	to	10/6/04	16.83	+/-	0.64
55	TLB	10/6/04	to	1/5/05	18.20	+/-	0.90
56	TLB	1/6/04	to	4/1/04	14.92	+/-	0.41
56	TLB	4/1/04	to	7/8/04	14.91	+/-	0.74

TLD Gamma Dose Detail Report
Radiological Environmental Monitoring Program Detail Data
Perry Nuclear Power Plant, Lake County Ohio Docket no.: 50-440/50-441
Sample Frequency is: Quarterly

Location	Sample Type	Collection Period			Exposure		
56	TLB	7/8/04	to	10/6/04	16.72	+/-	0.54
56	TLB	10/6/04	to	1/5/05	16.73	+/-	1.03
58	TLB	1/6/04	to	4/1/04	14.78	+/-	1.30
58	TLB	4/1/04	to	7/8/04	15.15	+/-	0.66
58	TLB	7/8/04	to	10/6/04	14.11	+/-	0.66
58	TLB	10/6/04	to	1/5/05	15.08	+/-	0.85

TLD Gamma Dose Detail Report 2004

Radiological Environmental Monitoring Program Detail Data
Perry Nuclear Power Plant, Lake County Ohio Docket no. : 50-440/50-441
Sample Frequency is: Annual

Location	Sample Type	Collection Period			Exposure		
1	TLA	1/6/04	to	1/5/05	56.47	+/-	2.43
3	TLA	1/6/04	to	1/5/05	57.03	+/-	2.40
4	TLA	1/6/04	to	1/5/05	63.69	+/-	3.12
5	TLA	1/6/04	to	1/5/05	58.80	+/-	2.19
6	TLA	1/6/04	to	1/5/05	65.02	+/-	2.87
7	TLA	1/6/04	to	1/5/05	64.87	+/-	1.03
8	TLA	1/6/04	to	1/5/05	58.52	+/-	1.79
9	TLA	1/6/04	to	1/5/05	55.04	+/-	1.51
10	TLA	1/6/04	to	1/5/05	76.97	+/-	3.21
11	TLA	1/6/04	to	1/5/05	62.56	+/-	1.97
12	TLA	1/6/04	to	1/5/05	63.44	+/-	1.79
13	TLA	1/6/04	to	1/5/05	63.08	+/-	2.34
14	TLA	1/6/04	to	1/5/05	56.96	+/-	2.92
15	TLA	1/6/04	to	1/5/05	53.70	+/-	1.81
21	TLA	1/6/04	to	1/5/05	66.93	+/-	4.41
23	TLA	1/6/04	to	1/5/05	62.95	+/-	1.87
24	TLA	1/6/04	to	1/5/05	57.34	+/-	3.78
29	TLA	1/6/04	to	1/5/05	76.74	+/-	2.39
30	TLA	1/6/04	to	1/5/05	67.51	+/-	2.51
31	TLA	1/6/04	to	1/5/05	73.10	+/-	3.35
33	TLA	1/6/04	to	1/5/05	75.39	+/-	2.28
35	TLA	1/6/04	to	1/5/05	60.57	+/-	1.48

Radiological Environmental Monitoring Program Detail Data
Perry Nuclear Power Plant, Lake County Ohio Docket no. : 50-440/50-441
Sample Frequency is: Annual

Location	Sample Type	Collection Period			Exposure		
36	TLA	1/6/04	to	1/5/05	78.82	+/-	1.17
53	TLA	1/6/04	to	1/5/05	67.43	+/-	2.82
54	TLA	1/6/04	to	1/5/05	61.38	+/-	1.92
55	TLA	1/6/04	to	1/5/05	68.14	+/-	2.14
56	TLA	1/6/04	to	1/5/05	59.25	+/-	1.54
58	TLA	1/6/04	to	1/5/05	51.88	+/-	1.86

Water Gamma Spectral Detail Report 2004
Radiological Environmental Monitoring Program Detail Data
Perry Nuclear Power Plant, Lake County Ohio Docket no. : 50-440/50-441
Sample Frequency is: Monthly Results in pCi/L +/- 2 Sigma

Location	Sample Type	Collection Period	Ba-140 Fe-59 Zr-95	Co-58 La-140	Co-60 Mn-54	Cs-134 Nb-95	Cs-137 Zn-65
28	Water	12/26/03 to 1/29/04	< 18.59 < 4.00 < 4.08	< 3.47 < 3.31	< 2.36 < 2.76	< 2.62 < 4.38	< 3.94 < 4.06
28	Water	1/29/04 to 2/27/04	< 28.63 < 12.50 < 12.21	< 4.85 < 3.11	< 5.07 < 2.80	< 6.54 < 6.61	< 3.69 < 6.11
28	Water	3/26/04 to 3/26/04	< 24.04 < 6.57 < 5.44	< 3.74 < 5.18	< 6.29 < 4.57	< 5.77 < 3.66	< 3.92 < 3.12
28	Water	3/26/04 to 4/29/04	< 15.35 < 3.71 < 6.20	< 2.27 < 2.74	< 2.17 < 2.73	< 2.32 < 2.45	< 4.05 < 3.51
28	Water	4/29/04 to 5/27/04	< 23.72 < 13.73 < 12.98	< 4.00 < 8.16	< 5.21 < 4.01	< 6.55 < 2.63	< 5.29 < 10.03
28	Water	6/24/04 to 6/24/04	< 13.46 < 5.56 < 5.80	< 1.77 < 3.09	< 2.40 < 1.62	< 3.54 < 4.04	< 2.85 < 4.16
28	Water	6/24/04 to 7/29/04	< 14.77 < 3.97 < 9.05	< 2.17 < 6.39	< 1.63 < 2.68	< 4.03 < 3.83	< 2.37 < 2.87
28	Water	7/29/04 to 8/26/04	< 23.08 < 3.26 < 5.83	< 1.94 < 5.68	< 1.63 < 3.37	< 1.94 < 1.91	< 4.06 < 2.35
28	Water	8/26/04 to 9/30/04	< 16.29 < 6.59 < 7.59	< 1.51 < 4.99	< 2.29 < 2.90	< 3.71 < 3.68	< 2.79 < 7.99
28	Water	9/30/04 to 10/28/04	< 13.12 < 5.57 < 7.68	< 4.02 < 3.49	< 1.97 < 3.72	< 2.91 < 4.07	< 3.97 < 5.45
28	Water	10/28/04 to 11/29/04	< 19.27 < 6.25 < 5.55	< 2.66 < 2.54	< 1.72 < 3.13	< 3.30 < 3.86	< 3.14 < 2.87
28	Water	11/29/04 to 12/30/04	< 22.46 < 9.40 < 12.61	< 3.48 < 8.90	< 4.38 < 3.93	< 4.79 < 6.02	< 3.08 < 3.70

Water Gamma Spectral Detail Report 2004
Radiological Environmental Monitoring Program Detail Data
Perry Nuclear Power Plant, Lake County Ohio Docket no. : 50-440/50-441
Sample Frequency is: Monthly Results in pCi/L +/- 2 Sigma

Location	Sample Type	Collection Period	Ba-140 Fe-59 Zr-95	Co-58 La-140	Co-60 Mn-54	Cs-134 Nb-95	Cs-137 Zn-65
34	Water	12/26/03 to 1/29/04	< 11.05 < 4.65 < 4.62	< 2.75 < 3.80	< 1.16 < 2.61	< 2.36 < 3.65	< 2.06 < 4.03
34	Water	1/29/04 to 2/27/04	< 18.04 < 6.17 < 5.79	< 2.78 < 6.36	< 2.66 < 1.17	< 2.04 < 3.27	< 5.10 < 5.64
34	Water	2/27/04 to 3/26/04	< 15.43 < 3.98 < 7.38	< 2.29 < 2.40	< 2.23 < 2.81	< 3.98 < 2.33	< 1.88 < 4.36
34	Water	3/26/04 to 4/29/04	< 25.75 < 9.50 < 14.59	< 5.10 < 3.08	< 5.78 < 5.23	< 6.45 < 5.63	< 6.43 < 6.11
34	Water	4/29/04 to 5/27/04	< 22.07 < 3.94 < 10.15	< 2.38 < 7.03	< 2.75 < 4.47	< 5.66 < 4.68	< 2.70 < 4.11
34	Water	5/27/04 to 6/24/04	< 25.24 < 9.18 < 7.11	< 4.72 < 3.92	< 5.84 < 4.37	< 5.63 < 3.59	< 5.90 < 4.11
34	Water	6/24/04 to 7/29/04	< 35.83 < 8.71 < 9.71	< 1.72 < 3.14	< 3.44 < 3.59	< 4.04 < 3.72	< 2.22 < 10.55
34	Water	7/29/04 to 8/26/04	< 15.77 < 5.25 < 7.38	< 1.71 < 4.72	< 1.29 < 3.85	< 2.50 < 2.48	< 2.95 < 2.00
34	Water	8/26/04 to 9/30/04	< 14.88 < 9.01 < 8.16	< 4.97 < 5.23	< 3.46 < 3.46	< 3.19 < 4.19	< 1.39 < 3.70
34	Water	9/30/04 to 10/28/04	< 14.22 < 3.44 < 2.75	< 1.04 < 1.67	< 2.11 < 2.76	< 2.25 < 1.91	< 2.23 < 1.89
34	Water	10/28/04 to 11/29/04	< 24.00 < 3.41 < 6.28	< 2.84 < 4.36	< 4.14 < 4.01	< 3.47 < 2.68	< 2.09 < 6.97
34	Water	11/29/04 to 12/30/04	< 14.60 < 3.63 < 3.33	< 1.34 < 4.02	< 1.42 < 1.63	< 2.64 < 3.01	< 2.48 < 1.98

Water Gamma Spectral Detail Report 2004
Radiological Environmental Monitoring Program Detail Data
Perry Nuclear Power Plant, Lake County Ohio Docket no. : 50-440/50-441
Sample Frequency is: Monthly Results in pCi/L +/- 2 Sigma

Location	Sample Type	Collection Period	Ba-140 Fe-59 Zr-95	Co-58 La-140	Co-60 Mn-54	Cs-134 Nb-95	Cs-137 Zn-65
36	Water	12/26/03 to 1/29/04	< 9.30 < 3.22 < 3.78	< 1.58 < 1.89	< 1.48 < 2.82	< 3.51 < 3.97	< 2.96 < 3.50
36	Water	1/29/04 to 2/27/04	< 12.21 < 4.07 < 3.88	< 2.26 < 3.80	< 2.26 < 1.94	< 2.52 < 3.10	< 2.68 < 2.53
36	Water	2/27/04 to 3/26/04	< 11.37 < 2.11 < 4.74	< 2.91 < 2.60	< 2.71 < 2.15	< 2.40 < 2.76	< 2.46 < 3.16
36	Water	3/26/04 to 4/29/04	< 14.65 < 7.81 < 7.49	< 4.94 < 5.83	< 2.74 < 2.97	< 2.76 < 3.40	< 3.91 < 7.08
36	Water	4/29/04 to 5/27/04	< 18.51 < 6.01 < 6.86	< 2.90 < 3.50	< 3.28 < 3.84	< 3.98 < 3.69	< 2.17 < 5.45
36	Water	5/27/04 to 6/24/04	< 18.50 < 6.90 < 5.44	< 2.05 < 3.43	< 1.75 < 1.70	< 2.31 < 3.65	< 2.73 < 2.54
36	Water	6/24/04 to 7/29/04	< 23.36 < 4.90 < 3.36	< 2.65 < 6.30	< 1.82 < 2.41	< 2.40 < 3.19	< 2.18 < 3.11
36	Water	7/29/04 to 8/26/04	< 15.21 < 3.26 < 5.79	< 1.71 < 3.86	< 3.04 < 2.60	< 1.89 < 2.15	< 1.77 < 2.76
36	Water	8/26/04 to 9/30/04	< 12.57 < 5.58 < 5.88	< 3.55 < 3.34	< 3.40 < 3.09	< 3.87 < 3.89	< 2.45 < 5.41
36	Water	9/30/04 to 10/28/04	< 12.48 < 5.12 < 4.50	< 1.67 < 2.72	< 2.39 < 2.89	< 2.49 < 2.64	< 1.82 < 5.93
36	Water	10/28/04 to 11/29/04	< 20.54 < 6.23 < 7.84	< 3.07 < 6.44	< 3.78 < 3.48	< 4.22 < 4.52	< 3.53 < 2.71
36	Water	11/29/04 to 12/30/04	< 12.26 < 5.68 < 6.01	< 1.27 < 2.16	< 2.51 < 1.85	< 2.92 < 2.27	< 2.43 < 1.70

Water Gamma Spectral Detail Report 2004
Radiological Environmental Monitoring Program Detail Data
Perry Nuclear Power Plant, Lake County Ohio Docket no. : 50-440/50-441
Sample Frequency is: Monthly Results in pCi/L +/- 2 Sigma

Location	Sample Type	Collection Period	Ba-140 Fe-59 Zr-95	Co-58 La-140	Co-60 Mn-54	Cs-134 Nb-95	Cs-137 Zn-65
59	Water	2/27/04 to 3/26/04	< 14.79 < 4.85 < 9.77	< 5.68 < 6.03	< 5.42 < 4.49	< 5.69 < 5.22	< 5.01 < 5.84
59	Water	3/26/04 to 4/29/04	< 15.26 < 3.53 < 4.80	< 3.42 < 3.71	< 2.72 < 2.60	< 3.00 < 3.44	< 2.03 < 4.05
59	Water	4/29/04 to 5/27/04	< 15.04 < 3.49 < 5.06	< 1.76 < 2.32	< 2.94 < 2.72	< 3.95 < 0.92	< 2.38 < 4.02
59	Water	5/27/04 to 6/24/04	< 25.06 < 6.89 < 6.94	< 2.21 < 3.37	< 5.89 < 3.38	< 5.42 < 2.13	< 4.28 < 3.69
59	Water	6/24/04 to 7/29/04	< 26.95 < 9.15 < 6.07	< 3.99 < 11.00	< 4.15 < 3.09	< 3.83 < 2.98	< 3.50 < 4.70
59	Water	7/29/04 to 8/26/04	< 15.63 < 3.29 < 5.81	< 1.49 < 3.14	< 2.36 < 2.84	< 2.22 < 3.00	< 2.44 < 3.52
59	Water	8/26/04 to 9/30/04	< 30.68 < 9.25 < 8.67	< 4.20 < 4.41	< 4.56 < 2.60	< 5.59 < 3.26	< 4.57 < 4.86
59	Water	9/30/04 to 10/28/04	< 19.52 < 7.37 < 3.14	< 2.07 < 2.04	< 3.53 < 2.79	< 3.40 < 2.95	< 2.90 < 4.09
59	Water	10/28/04 to 11/29/04	< 32.54 < 4.83 < 4.47	< 3.34 < 3.62	< 1.00 < 2.55	< 3.15 < 4.35	< 3.02 < 2.06
59	Water	11/29/04 to 12/30/04	< 22.60 < 3.62 < 6.34	< 1.78 < 3.58	< 1.94 < 2.71	< 1.74 < 4.00	< 1.95 < 2.64
60	Water	2/27/04 to 3/26/04	< 15.09 < 10.15 < 7.55	< 3.79 < 2.78	< 6.40 < 4.60	< 6.07 < 5.44	< 6.18 < 6.35
60	Water	3/26/04 to 4/29/04	< 15.69 < 8.29 < 8.43	< 4.33 < 4.18	< 4.56 < 5.65	< 5.22 < 4.41	< 6.55 < 5.57

Water Gamma Spectral Detail Report 2004
Radiological Environmental Monitoring Program Detail Data
Perry Nuclear Power Plant, Lake County Ohio Docket no. : 50-440/50-441
Sample Frequency is: Monthly Results in pCi/L +/- 2 Sigma

Location	Sample Type	Collection Period	Ba-140 Fe-59 Zr-95	Co-58 La-140	Co-60 Mn-54	Cs-134 Nb-95	Cs-137 Zn-65
60	Water	4/29/04 to 5/27/04	< 23.63 < 7.39 < 5.73	< 4.26 < 5.34	< 4.63 < 3.87	< 6.04 < 2.26	< 5.61 < 4.94
60	Water	5/27/04 to 6/24/04	< 9.90 < 4.60 < 6.49	< 3.05 < 3.90	< 2.30 < 3.57	< 2.54 < 1.76	< 2.43 < 3.95
60	Water	6/24/04 to 7/29/04	< 13.38 < 3.52 < 4.37	< 3.40 < 5.61	< 1.75 < 2.19	< 3.82 < 2.06	< 2.26 < 1.83
60	Water	7/29/04 to 8/26/04	< 13.40 < 5.45 < 5.45	< 2.28 < 2.36	< 4.12 < 2.72	< 4.39 < 2.73	< 3.72 < 2.43
60	Water	8/26/04 to 9/30/04	< 11.54 < 8.74 < 6.54	< 2.91 < 6.80	< 3.02 < 3.78	< 2.75 < 2.36	< 4.89 < 5.40
60	Water	9/30/04 to 10/28/04	< 5.37 < 3.09 < 4.63	< 1.51 < 2.75	< 1.78 < 1.77	< 2.23 < 1.57	< 1.69 < 4.30
60	Water	10/28/04 to 11/29/04	< 22.99 < 4.86 < 10.60	< 3.89 < 9.80	< 4.85 < 3.04	< 2.66 < 7.72	< 2.36 < 5.96
60	Water	11/29/04 to 12/30/04	< 15.45 < 3.51 < 5.02	< 2.57 < 3.76	< 2.99 < 3.75	< 3.27 < 4.50	< 3.15 < 3.54

Water Gross Beta Detail Report 2004
Radiological Environmental Monitoring Program Data Summary
Perry Nuclear Power Plant, Lake County Ohio Docket no. : 50-440/50-441
Sample Frequency is: Monthly Results in pCi/L +/- 2 Sigma

		Location				
Collection Period	Sample Type	28	34	36	59	60
12/26/03 to 1/29/04	Water	LLD	LLD	LLD		
1/29/04 to 2/27/04	Water	LLD	LLD	LLD		
2/27/04 to 3/26/04	Water		LLD	LLD	LLD	LLD
3/26/04 to 3/26/04	Water	LLD				
3/26/04 to 4/29/04	Water	LLD	LLD	LLD	LLD	LLD
4/29/04 to 5/27/04	Water	LLD	LLD	LLD	LLD	LLD
5/27/04 to 6/24/04	Water		LLD	LLD	LLD	LLD
6/24/04 to 6/24/04	Water	LLD				
6/24/04 to 7/29/04	Water	LLD	LLD	LLD	LLD	LLD
7/29/04 to 8/26/04	Water	LLD	LLD	LLD	LLD	LLD
8/26/04 to 9/30/04	Water	LLD	LLD	LLD	LLD	LLD
9/30/04 to 10/28/04	Water	LLD	LLD	LLD	LLD	LLD

Water Gross Beta Detail Report 2004
Radiological Environmental Monitoring Program Data Summary
Perry Nuclear Power Plant, Lake County Ohio Docket no. : 50-440/50-441
Sample Frequency is: Monthly Results in pCi/L +/- 2 Sigma

		Location				
Collection Period	Sample Type	28	34	36	59	60
10/28/04 to 11/29/04	Water	LLD	3.09 +/- 0.58	LLD	LLD	LLD
11/29/04 to 12/30/04	Water	LLD	LLD	LLD	LLD	LLD

Water Tritium Detail Report 2004

Radiological Environmental Monitoring Program Detail Data
Perry Nuclear Power Plant, Lake County Ohio Docket no. : 50-440/50-441
Sample Frequency is: Quarterly Results in pCi/L +/- 2 Sigma

Location	Sample Type	Collection Date	H-3
28	Water	3/26/04	< 157.18
28	Water	6/24/04	< 163.25
28	Water	9/30/04	< 162.54
28	Water	12/30/04	< 136.21
34	Water	3/26/04	LLD
34	Water	6/24/04	< 163.25
34	Water	9/30/04	< 162.54
34	Water	12/30/04	< 136.21
36	Water	3/26/04	LLD
36	Water	6/24/04	< 163.25
36	Water	9/30/04	< 162.54
36	Water	12/30/04	< 136.21
59	Water	3/26/04	< 157.18
59	Water	6/24/04	< 163.25
59	Water	9/30/04	< 162.54
59	Water	12/30/04	< 136.21
60	Water	3/26/04	< 157.18
60	Water	6/24/04	< 163.25
60	Water	9/30/04	< 162.54
60	Water	12/30/04	< 136.21

APPENDIX D, CORRECTIONS TO 2003 AEERR

1. Corrections for Paragraph 3, Page 1. Numbers reported in this paragraph inadvertently reflected 2002 dose numbers. Paragraph should read as follows for 2003 results:

   The dose to the general public from the plant's liquid and gaseous effluents was below the applicable regulatory limits. The calculated hypothetical maximum individual whole body dose potentially received by an individual resulting from PNPP liquid effluents was 9.50E-03 mrem (0.32 % of the applicable limit). The calculated hypothetical maximum individual whole body dose potentially received by an individual resulting from PNPP gaseous effluents was 1.95E-03 mrem (0.039% of the applicable limit). The summation of the hypothetical maximum individual dose from effluents in 2004 is equivalent to < 0.1 % of the total dose an individual living in the PNPP area receives from all sources of radiation.

2. Corrections for Paragraph 1, Page 9. Numbers reported in this paragraph inadvertently reflected 2002 reported numbers. Paragraph should read as follows for 2003 results:

   The 40CFR190 limit for total direct-radiation dose is 25 mrem. For 2003, the total whole body dose to a member of the general public, considering all sectors, was 2.8 mrem. This value was determined by summing the annual whole body doses from liquid and gaseous radioactive effluents, the annual gaseous and liquid organ dose (refer to Table 7) and the maximum, direct-radiation dose. Since the direct radiation dose, as determined by TLD, was indistinguishable from natural background (refer to Figure 8), it was not included in the calculation.

3. Corrections for Table 3. Nuclides Xe133 and Xe135 were inadvertently excluded from this table. The corrected table should read as follows:

Table 3: Radioactive Liquid Effluent Nuclide Composition

	Unit	Quarter 1	Quarter 2	Quarter 3	Quarter 4	Annual Total
Tritium	Ci	5.13E+01	4.48E+01	1.64E+01	0	1.13E+02
Chromium-51	Ci	<LLD	3.83E-03	5.09E-05	0	3.88E-03
Manganese-54	Ci	2.58E-04	4.00E-03	5.34E-4	0	4.79E-03
Iron-55	Ci	<LLD	4.40E-03	<LLD	0	4.40E-03
Iron-59	Ci	<LLD	3.60E-04	<LLD	0	3.60E-04
Cobalt-58	Ci	1.48E-04	1.12E-03	2.11E-04	0	1.48E-03
Cobalt-60	Ci	2.15E-03	1.17E-02	2.17E-03	0	1.60E-02
Zinc-65	Ci	8.09E-05	8.62E-04	1.59E-04	0	1.10E-03
Strontium-92	Ci	<LLD	2.01E-05	3.65E-04	0	3.85E-04
Zirconium-95	Ci	<LLD	2.44E-05	<LLD	0	2.44E-05
Niobium-95	Ci	<LLD	2.40E-05	<LLD	0	2.40E-05
Technetium-99M	Ci	1.03E-04	<LLD	<LLD	0	1.03E-04
Rhuthenium-105	Ci	<LLD	<LLD	<LLD	0	<LLD
Silver-110m	Ci	9.39E-05	1.01E-03	1.26E-03	0	2.36E-03
Antimony-124	Ci	<LLD	<LLD	<LLD	0	<LLD
Antimony-125	Ci	<LLD	<LLD	<LLD	0	<LLD
Iodine-131	Ci	<LLD	<LLD	<LLD	0	<LLD
Xenon-133	Ci	1.89E-04	9.84E-05	9.36E-04	0	1.22E-03
Xenon-135	Ci	<LLD	7.80E-06	<LLD	0	7.80E-06
Cesium-134	Ci	4.94E-05	2.48E-04	1.18E-04	0	4.15E-04
Cesium-137	Ci	1.31E-04	3.26E-04	1.75E-04	0	6.32E-04
Cesium-138	Ci	<LLD	<LLD	<LLD	0	<LLD
Lanthanum-140	Ci	3.31E-04	1.03E-04	<LLD	0	4.34E-04
Gold-199	Ci	<LLD	<LLD	6.96E-06	0	6.96E-06
Total for Period	**Ci**	**5.13E+01**	**4.48E+01**	**1.64E+01**	**0**	**1.13E+02**

<LLD – Less than the lower limit of detection

PNPPD

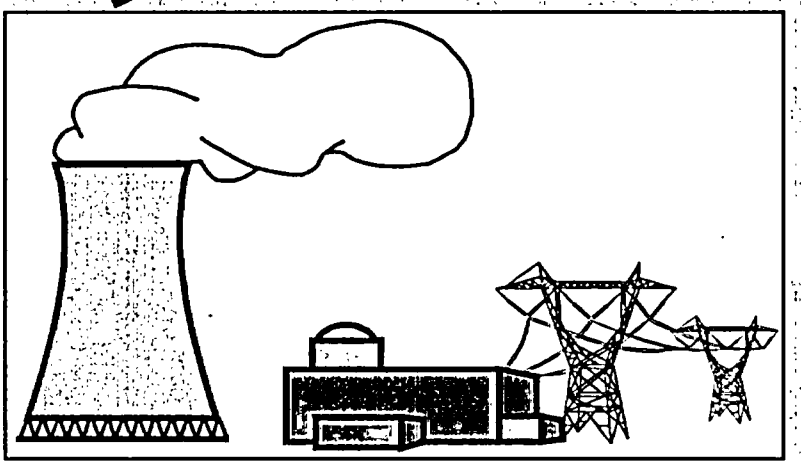

Generating Success!

For more information, write :

Perry Nuclear Power Plant
10 Center Road
P.O. Box 97
Perry OH 44081-0097

PROCEDURE APPROVAL FORM
NOP-SS-3001-02 Rev. 03

SITE	SHEET	TRACKING NO.
☐ DB ☒ PY ☐ BV	1 OF 1	7099

SECTION 1 - IDENTITY

PROCEDURE NO.	PROPOSED REVISION NO.		
PCP	9	☐ SIGNIFICANT CHANGE ☐ SIMPLE CHANGE ☒ PROCEDURE CORRECTION	☐ CANCELLATION (Replaced by _____) ☐ RELEASE FROM ADMINISTRATIVE HOLD ☐ PLACE ON ADMINISTRATIVE HOLD ☐ LIMITED USE (REV. NO. _____) AFFECTED PAGES _____ ☐ TEMPORARY PROCEDURE Expires _____
SUPERSEDES ~~Ne~~			

PROCEDURE TITLE
Process Control program (PCP) 3/2/07

(BV/DB) PROCEDURE CLASSIFICATION
☐ SR ☐ QR ☐ N-QR/SR
CHANGE TO? ☐ YES ☐ NO

(BV) PERIODIC REVIEW
☐ YES ☐ NO

ACTIVITY SUMMARY / PURPOSE
Corrected a miner typo, and incorporate changes to the PCP that:
1. - Standardizes the inconsistent references to Chem-Nuclear Systems Incorporated.
2. - Adds a reference that clarifies where the current formulas for solidification processes can be found.
3. - Replaces the references to PAP-1304, REC-0203, RPI-1102, REC-0200 with a reference to NOP-OP-2002.
Ref CA #03-05443-01

☐ CONTINUE

SECTION 2 - CONCURRENT EFFECTIVE DOCUMENTS ☐ CONTINUE

DOCUMENT NO. / REVISION	DOCUMENT TITLE	TRACKING NO.
	Procedure Correction;	
	No RAD Required	

SECTION 3 - REVIEW ORGANIZATIONS

	REQUIRED	REQUESTED
☒ None	☐ CONTINUED	☐ CONTINUE

PROCEDURE PREPARER (PRINT AND SIGN)
Alan K. Schwenk

DATE
02-10-04

SECTION 4 - ATTACHMENTS

COMPLETED AND ATTACHED

YES	N/A		YES	N/A		YES	N/A	
☐	☒	VALIDATION DOCUMENTATION	☐	☒	10CFR50.59 SCREEN NO. _____	☐	☒	PCRs
☐	☒	COMMITMENT DOCUMENTATION	☐	☒	10CFR50.59 EVALUATION NO. _____	☐	☒	OTHER _____
☐	☒	REGULATORY APPLICABILITY DETERMINATION NO. _____	☐	☒	PROCEDURE REVIEW FORMS	☐	☒	OTHER _____

SECTION 5 - IQR/APPROVAL

INDEPENDENT QUALIFIED REVIEWER (PRINT AND SIGN) N/A			DATE
☐ ON-SITE REVIEW COMMITTEE (SIGNATURE OR MTG NO.) ~~Ne~~	DATE	☐ PLANT MANAGER ~~Na~~	DATE
PROCEDURE OWNER			DATE 2/10/04

SECTION 6 - TRAINING / PROCEDURE EFFECTIVITY

TRAINING REQUIRED (SIGNIFICANT CHANGES ONLY)	REVISION NO.	EFFECTIVE DATE
☐ YES ☑ NO _____ (BV) CR NO.	9	3-9-04

PERRY OPERATIONS MANUAL

Process Control Program

TITLE: PROCESS CONTROL PROGRAM (PCP)

REVISION: 9 EFFECTIVE DATE: 3-9-04

PREPARED: Alan Schwenk 2-12-04
/ Date

PROCESS CONTROL PROGRAM (PCP)

Table of Contents

Section	Title	Page
1.0	INTRODUCTION	1
1.1	Definitions	1
2.0	WASTE TYPES	2
2.1	Evaporator Concentrates (Bottoms)	2
2.2	Bead Resins (SRT)	2
2.3	Filter Demineralizer Media Sludge Powdered Resin Waste Stream	3
2.4	Irradiated Hardware	3
2.5	Filter Cartridges	3
2.6	Dry Active Waste (DAW)	4
2.7	Other Materials	4
3.0	PROCESS DESCRIPTION	4
3.1	Batch Tank Processing	4
3.1.1	Filling of Tanks	4
3.1.2	Sampling/Analysis	4
3.1.3	Preconditioning	5
3.1.4	Mixing Ratios	5
3.1.5	Dewatering	5
3.2	Solidification Processing	5
3.3	Cartridge Filters	11
3.4	Dry Active Waste	11
3.5	Other Waste Forms and Processes	11
4.0	PRODUCT CONTROL	12
4.1	Test Solidification	12
4.2	Product Quality	12
4.3	Acceptability	12
5.0	WASTE CLASSIFICATION, CHARACTERIZATION AND MANIFEST REQUIREMENTS	13
5.1	Waste Classification	13
5.2	Waste Characteristics and Manifest Requirements	13
6.0	ADMINISTRATIVE CONTROLS	14
7.0	QUALITY ASSURANCE	14
8.0	RECORDS	16
9.0	ATTACHMENTS	16
10.0	REFERENCES	16
10.1	Commitments	16
APPENDIX A	Controls	17
REFERENCES		37

SCOPE OF REVISION:

Rev. 9 -
1. Correct a minor typo.
2. Standardize the inconsistent references to Chem-Nuclear Systems Incorporated.
3. Add a reference that clarifies where the current formulas for solidification processes can be found.
4. Replace the references to PAP-1304, REC-0203, RPI-1102, and REC-0200 with a reference to NOP-OP-2002.

Ref CR #03-05443-01

PROCESS CONTROL PROGRAM (PCP)

1.0 INTRODUCTION

The Process Control Program (PCP) is designed to provide administrative control and guidance for the solidification, dewatering and other processing of applicable forms of radwaste for ultimate disposal. The PCP contains information pertaining to the current formula (mixing ratio)(reference vendor topical reports; Mobile Cement Solidification System CNSI-2 and Pacific Nuclear Systems Radwaste Solidification System, TP-05), sampling, analyses, tests, and determinations to be made to ensure that the processing and packaging of radioactive wastes, based on demonstrated processing of actual or simulated wet solid wastes, will be accomplished in such a way as to ensure compliance with 10CFR20, 10CFR61, 10CFR71, Federal and State regulations, burial ground requirements and other requirements governing the disposal of radioactive waste.

The PCP is applicable to the plant installed and Pacific Nuclear Co., Chem-Nuclear Systems Inc, Scientific Ecology Group (SEG), and their successors or assigns supplied mobile radwaste systems for solidification and dewatering of applicable waste forms. Waste packaged for intermediary processing at offsite vendors shall be prepared for shipment in accordance with the specific vendor's instructions and waste acceptance criteria, or approved operations manual instructions. All solidifications at Perry will be performed by a vendor with a Topical Report that is accepted by the NRC and destination burial site(s) as meeting all necessary requirements. <B00797>

Features have been incorporated into the design of the solid radioactive waste system and the building housing this system to insure that exposures of operating personnel to radiation will be kept within ALARA guidelines.

Appendix A of the PCP was prepared based on guidance of NUREG-1302 "Offsite Dose Calculation Manual Guidance: Standard Radiological Effluent Controls for Boiling Water Reactors," Generic Letter 89-01, Supplement No. 1. This appendix along with plant procedures will be used by plant personnel to demonstrate compliance with Operational Requirements Manual (ORM) Section 7.9. (Process Control Program).

1.1 Definitions

The following definitions are applicable to the sections that follow:

ACCEPTABLE ENVELOPE: (of solidification\dewatering): specific properties of wastes that fall within the limits of the parameters required for solidification/dewatering. These parameters are established within the test solidification instruction and/or vendor waste acceptance criteria or Topical Report for each applicable waste type. <B00797>

BATCH: the volume of isolated waste contained in a tank that will be processed for solidification or dewatering.

CONTAINER: the physical container in which the final waste product is deposited.

HIGH INTEGRITY CONTAINER (HIC): a burial site licensing department approved container for burial having an expected life of 300 years and provides the stability to meet burial requirements. All HIC's must have an approved Certificate of Compliance.

SOLIDIFICATION: the conversion of radioactive materials from liquid and solid systems to a monolithic, immobilized solid with a definite volume and shape, bounded by a stable surface of distinct outline on all sides (free standing), with a free water content of less than 0.5% by volume.

2.0 WASTE TYPES

There are numerous types of radioactive waste expected to be generated at the Perry Plant that will require processing, including solidification, or dewatering, or burial site approved intermediary offsite vendor process prior to their disposal. These radwaste types can be categorized based on their chemical and physical properties. The waste types expected at PNPP are evaporator concentrates (bottoms), bead resins, filter demineralizer media sludge, traveling belt filter cake, filter cartridges, oily waste, and dry active waste (DAW).

The following waste types (other than DAW) may be solidified/dewatered individually or in combination, with the provision that the chemistry of the waste falls within the acceptable envelope for solidification/dewatering.

2.1 Evaporator Concentrates (Bottoms)

Evaporator concentrates (bottoms) result from the processing of the chemical waste tanks which contain condensate demineralizer regeneration solutions and/or low concentrations of the following: trisodium phosphate, minute amounts of other chemicals used for chemistry analyses, or decontamination solutions. They will normally be in the range of 5% to 25% sodium sulfate by weight. This waste stream is not currently used.

2.2 Bead Resins (SRT)

Bead resins are collected from the condensate, liquid radwaste, and suppression pool demineralizers and stored in the spent resin tank. Bead resins are also collected from chemical decontamination processes. Bead resin from the liquid radwaste and suppression pool demineralizers may contain activated carbon.

2.3 Filter Demineralizer Media Sludge Powdered Resin Waste Stream

Sludge is the waste product generated by the backwash of the condensate filters, the radwaste traveling belt filters, the reactor water cleanup filter/demineralizers, and the fuel pool filter/demineralizers. Sludge may consist of powdered ion exchange resin at varying degrees of exhaustion, fibrous filter media, and small concentrations of various solids and corrosion products. The media are normally decanted in the appropriate settling tank prior to solidification/dewatering or preparation for offsite processing.

The waste in this category is normally separated into two waste streams. The Condensate, Fuel Pool and Radwaste Filter media is collected into and processed from one of four Settling Tanks as a single waste stream.

The Reactor Water Cleanup filter/demineralizer waste is processed separately from the other powdered resin waste due to its higher activity levels. This waste stream is collected into and processed from one of two smaller settling tanks.

2.4 Irradiated Hardware

a. Irradiated hardware removed from the internal area of the reactor pressure vessel is processed and packaged in the spent fuel pool(s)/cask storage pit. This waste stream is considered Irradiated Hardware.

b. The constituents of this waste stream may include control rod blades, LRPMSs, IRMs, TIPs and components expended during hardware processing and packaging activities. Startup sources may also be processed as part of this waste stream.

c. Irradiated hardware is packaged in steel liners or other suitable disposal containers for disposal.

d. Liquid shall be drained to ensure the burial site free liquid Acceptance Criteria is met.

e. Irradiated hardware should not be mixed with any other waste type in final processing due to differences in stability requirements. Mixing of this waste stream with other wastes can only occur with approval from the disposal site or the waste processor.

2.5 Filter Cartridges

Filter cartridges from the CRD pump suction and discharge filters, non-precoat condensate filter septa and any other disposable-type filter cartridge, or non metallic filter septa, that may be used in permanent or temporary, plant or vendor systems are included in this category.

2.6 Dry Active Waste (DAW)

Contaminated air filters, paper, rags, clothing, tools, trash, equipment and parts, that cannot be effectively decontaminated are contained in this category. Also included are laboratory wastes.

Oily waste is that oil collected in liquid radwaste systems resulting from leakage and maintenance on various lubrication and hydraulic systems. Oily waste is considered part of the DAW waste stream because it is contaminated with the same types of corrosion products. However, oily waste does require special processing prior to disposal.

2.7 Other Materials

Various other materials not specifically identified above, will be evaluated for solidification, dewatering, or other process on a case-by-case basis.

3.0 PROCESS DESCRIPTION

The following process descriptions apply to both plant and vendor supplied systems. Any differences between the two have been noted.

3.1 Batch Tank Processing

3.1.1 Filling of Tanks

Once it is determined that a liquid radwaste system batch tank is to be processed, it will be recirculated to ensure a homogeneous mixture. Eductors inside the tanks enhance the mixing capabilities. The tank will be isolated using the plant's tagout program to ensure that no additional waste is added.

3.1.2 Sampling/Analysis

Samples will be obtained and analyzed for each batch of waste in accordance with appropriate site chemistry instructions for the plant system, or vendor procedures and PCP for vendor supplied sampling systems. Prior to sampling, tanks will undergo sufficient mixing and/or recirculation to ensure representative sampling. At a minimum, for solidification, analyses will be performed for radionuclide content, pH, oil content, and settled solids (oil and concentrates only). At a minimum, for dewatering, analyses will be performed for radionuclide and oil content. These analyses are necessary to ensure that the waste falls within the acceptable envelopes for solidification/dewatering. Samples of waste destined for off site processing shall be analyzed as required to ensure the waste processor's 'Waste Acceptance Criteria' or topical report requirements are satisfied.

3.1.3 Preconditioning

Waste preconditioning is the chemical or physical adjustment of the waste to bring it within an established acceptability envelope to ensure solidification. The need for and type of preconditioning shall be determined using sample analysis results and will be performed in accordance with the applicable site chemistry instruction or vendor procedures and PCP. Upon completion of waste preconditioning, additional samples shall be obtained, as required, to determine solidification mixing ratios.

Oily wastes may require special preconditioning. Handling of oily wastes will be conducted in accordance with burial site requirements.

Preconditioning may also be performed on waste streams which are or will be dewatered or processed offsite to eliminate or reduce bacterial activity in the waste. Preconditioning of waste streams for this purpose will be conducted in accordance with approved site and/or vendor procedures.

3.1.4 Mixing Ratios

Mixing ratios give the respective amounts of waste and solidification agents required for acceptable solidification. The determination of mixing ratios shall be performed for each batch of waste to be solidified. Solidification mixing ratios are dependent upon percent settled solids and sodium sulfate concentration. The waste type and ratios of cement, waste, sodium sulfate (for Class A waste), and water are determined in the applicable site chemistry instruction or vendor procedures and PCP.

3.1.5 Dewatering

Dewatering is the removal of water from solid material to a concentration of less than 0.5% or 1.0% by volume, as applicable to containers used and burial site limits. Dewatering of radioactive spent resins and filter sludges shall be performed in accordance with approved operating procedures which are based upon documented test data demonstrating the ability to achieve drainable water limits as specified in applicable regulations.

3.2 Solidification Processing

3.2.1 Description of Plant Processing System

Solidification and/or dewatering of wet solid radioactive waste will be processed by Chem-Nuclear Systems Inc's Rapid Dewatering System or ATG's Services Division's Resin Drying System. These systems are discussed in Section 3.2.2. The following description applies to the plant installed solid radwaste system that will interface with the vendor equipment (See Figure 1).

Solid Radioactive Waste Processing System

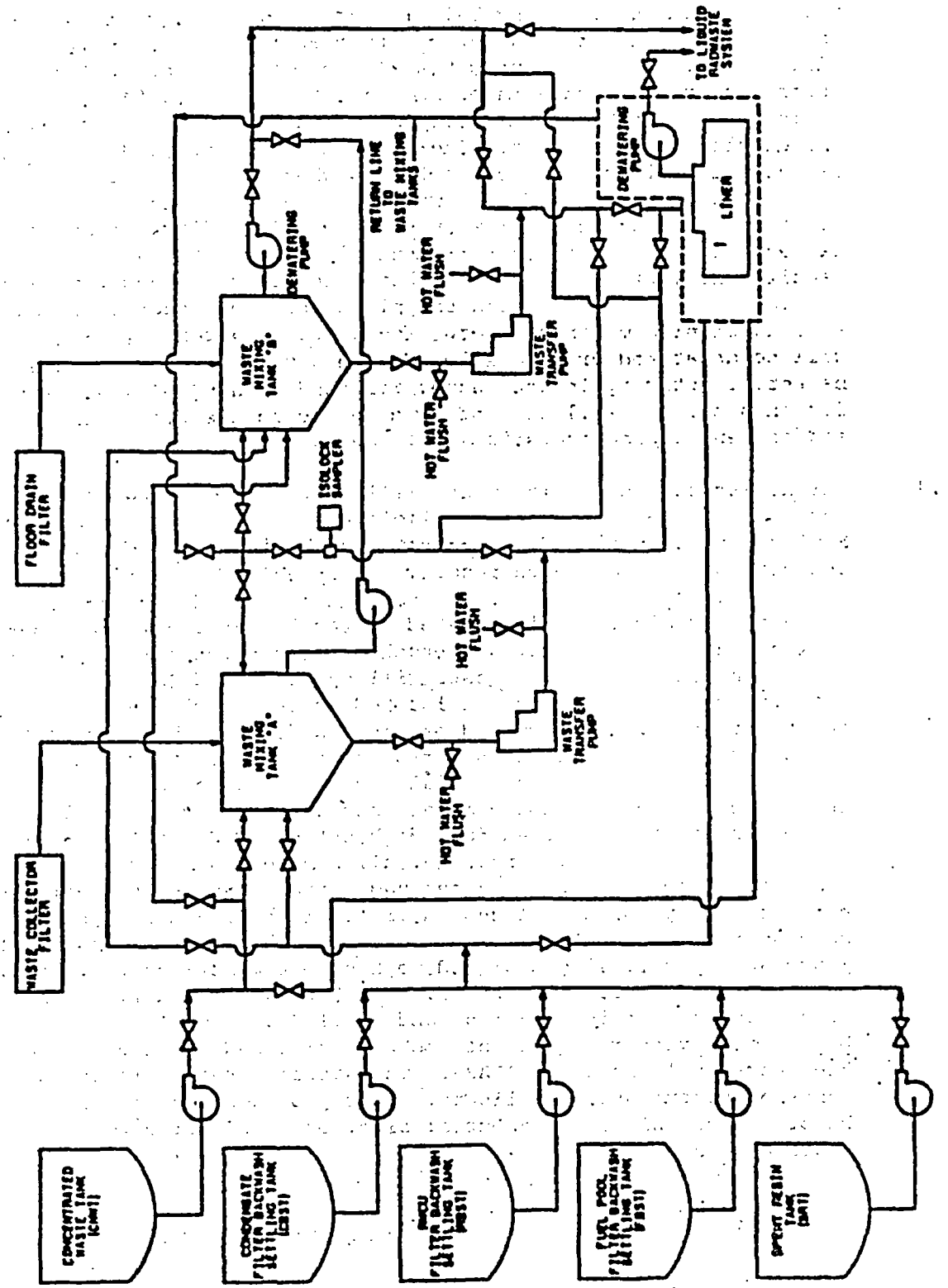

Figure 1

After the proper amount of waste has been accumulated in a settling or waste tank or has been transferred to the waste mixing tank, the tank is decanted to remove excess free water (except when the waste being handled is traveling belt filter cake, in which case a predetermined amount of water or other approved aqueous solution is added to the tank for slurry transfer of the contents). The waste slurry is transferred at a preset rate to the vendor's equipment, in accordance with OM13A: RWI-G51-(SRW), where it is either dewatered or solidified with cement. The waste mixing tanks and settling tanks have recirculation capabilities where a representative sample can be drawn. If needed, a dewatering connection is available which is routed to the liquid radwaste system. An additional connection has been provided back to the waste mixing tank for use in the event of a liner overfill condition. Hot water flush connections are provided to thoroughly flush the plant and the vendor equipment into the liner used for processing. The waste transfer line and dewatering return lines are located behind a two foot thick shield wall to reduce exposure to the operator during processing.

3.2.2 Description of the Vendor's Waste Processing System

The wet solid radioactive waste will be transferred to the vendor's equipment to be dewatered or solidified in accordance with site approved procedures. Table 1 lists the Topical Reports, procedures and any comments for each vendor.

The vendor's equipment is located in the Radwaste Building in the fill aisle, storage area, and truck bay (see Figure 2). Normal processing of radioactive waste will be performed in the fill aisle with the dewatering equipment located in the truck bay. Periodically, when determined prudent, waste will be processed in the truck bay. When this is performed several restrictions will be imposed to minimize the potential for radioactive spill and ensure the principles of ALARA are maintained. These include; all processing to be performed in a High Integrity Container (HIC) placed inside a shipping package, all hosing and associated connections to be placed in hose bags, truck bay access doors to have temporary curbing placed in front of them, and locking all access areas to the truck bay. The areas where the processing takes place are specifically designed to handle the movement, storage, and processing of radioactive waste. Concrete walls and floors in these areas have protective coatings and shield/ cask walls are provided between the vendors equipment and potential radioactive sources to keep personnel exposures ALARA. The storage area is large enough to contain approximately 15 liners. This provides adequate storage before it is shipped to a burial site, or transferred to the On Site Storage Area.

Vendor Procedures for Radwaste Processing

Vendor	Topical Report	Operating Procedures	Comments
Chem-Nuclear Systems Incorporated	Radioactive Waste Dewatering System, RDS-25506-01-P-A	Setup and Operating Procedure for the RDS-1000 Unit, FO-OP-032	1. Test solidifications will be run on each batch of the same waste type.
	Mobile Cement Solidification System, CNSI-2	Operating Procedure for the Mobile Cement Solidification Unit No. 221, SD-OP-050	
Allied Technologies Group	Vectra Dewatering System, TP-02-P-A	Resin Drying (Dewatering) System, OM-42-WS	
	Pacific Nuclear Systems Radwaste Solidification System, TP-05	Operation and Maintenance Manual for the ATG Radwaste Solidification System, OM-114	1. Test solidifications will be run on each batch of the same waste type.
		System Description of Pacific Nuclear System's Radioactive Waste Volume Reduction System RVR-800	
		Operation Procedure for RVR-800 Liquid Volume Reduction System, OM-0022-NS	

Table 1

Vendor Mobile Solidification Equipment Layout

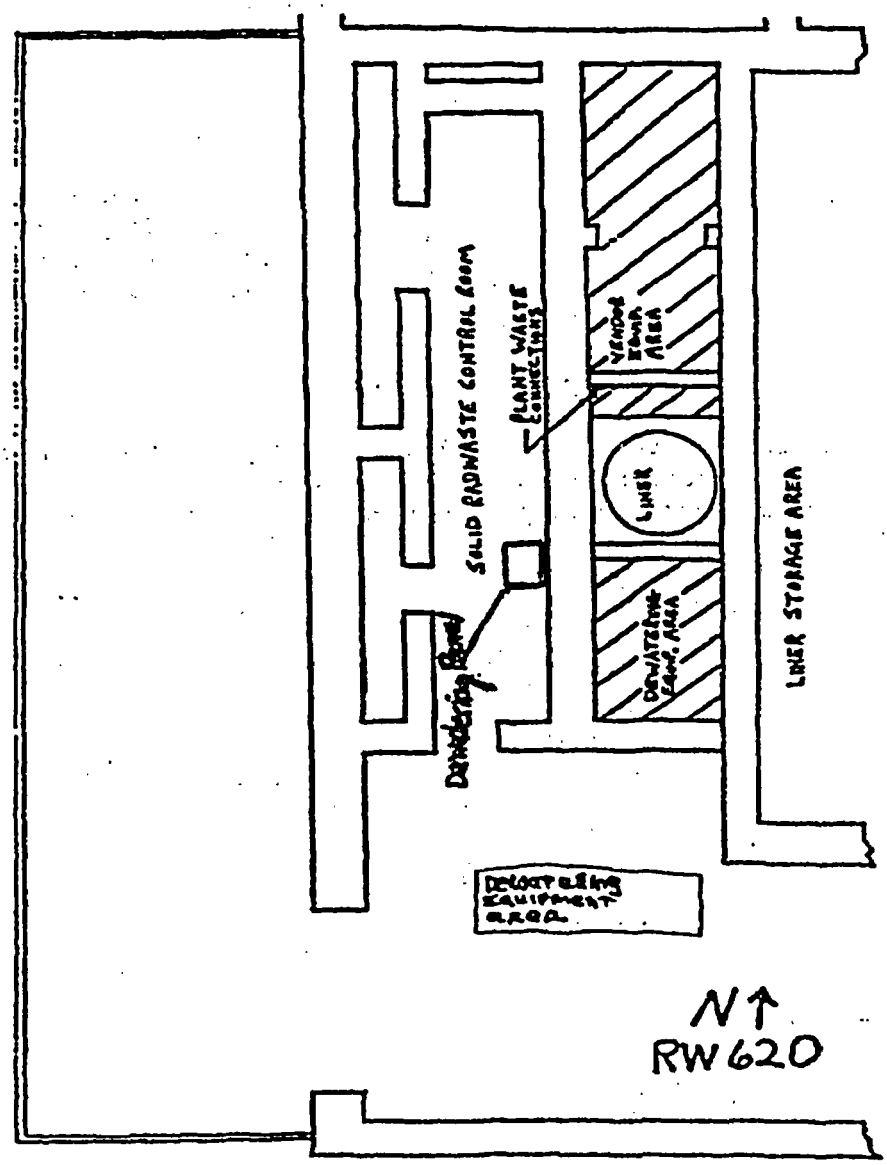

Figure 2

3.2.3 Radiological Effluent Controls and Monitoring

All processing with the vendor's equipment will be performed in a room with a volume sufficient to contain any postulated spill. A floor drain, routed to the liquid radwaste system, provides drainage in this area. All liquid radwaste discharges are sampled and monitored prior to their release to the environment.

Gaseous discharges from liners are processed through the vendor's off-gas blower system as described in the vendor's Topical Report. Ventilation from the areas housing the radwaste treatment and processing equipment, including the vendor's off-gas blower system, is routed through HEPA filters and charcoal beds prior to release to the environment via the Unit 1 Vent. Radiological monitoring is provided for Regulatory Guide 1.21 compliance to meet applicable Federal Code requirements.

3.2.4 Health Physics Support

Health Physics personnel will provide radiological control during the solidification and dewatering process. All work will be conducted under a Radiation Work Permit to keep personnel exposures ALARA.

3.2.5 Plant Utility Support

1. Fire Protection

   Fire suppression is provided above the processing and storage area to protect against fires. A fire hose is available in the truck bay for miscellaneous uses.

2. Two-Way Communication

   A two-way communication system will be used for communication between the plant operator and the vendor equipment operator. This will facilitate smooth coordination between the different segments of the waste processing system.

3. Heating and Ventilation

   The Radwaste Building Ventilation System will maintain a negative pressure in the processing and storage area. Heating is provided by the building heating system.

4. Overhead Crane

   An overhead crane will be used to transfer equipment between the storage and processing area and the truck bay. The crane has a 15 ton capacity which is fully capable of handling dewatered and solidified liners.

5. Closed Circuit Television

Closed Circuit Television will be used, where applicable, for remote viewing of the processing and storage areas. The overhead crane has an independent camera system for viewing all lifting and placing operations.

3.3 Cartridge Filters

Cartridge filters may be disposed of by encapsulation in a cement matrix in steel drums or liners. The encapsulation of cartridge filters shall be performed using approved procedures that provide reasonable assurance that the final waste form will meet the stability criteria of the Branch Technical Position on Waste Form. Cartridge filters may also be disposed of by placement in HIC's that are certified by the land disposal facility's State Agency. Additionally, cartridge filters may be sent to an offsite processor for processing if the filters meet the requirements of the processors waste acceptance criteria.

3.4 Dry Active Waste

Potentially contaminated dry wastes will be collected in containers located throughout the radiologically controlled areas within the plant. The waste will be periodically collected and transported to a temporary storage area prior to waste segregation onsite or offsite. Waste segregation will be performed to reduce waste volume and to recover reusable materials.

In order to reduce the waste volume, compressible waste will be compacted into shipping containers in accordance with applicable PNPP instructions, or sent to an offsite processor for volume reduction and/or final waste form packaging prior to disposal. Caution will be taken to avoid items that would cause free water formation as well as other compressibility hazards. Noncompressible waste will be loaded manually into suitable shipping containers.

The Waste Abatement and Reclamation Facility (WARF) is utilized (as an alternative to the Radwaste Building) for rad-material/Dry Active Waste (DAW) processing and storage areas. The WARF is used as a staging and processing area for items such as radioactive material and radioactive waste. It also houses a 96 ft 3 box compactor that can be utilized to supplement or as an alternative to the drum compactor located in the Radwaste Building.

3.5 Other Waste Forms and Processes

Waste forms and/or processes not previously discussed shall have an approved PNPP or vendor procedure to govern the process. The final waste product at PNPP must meet either: the disposal site waste acceptance criteria, the offsite waste processor's waste acceptance criteria, or be specifically waived in writing from the waste acceptance criteria by the disposal site or offsite waste processor prior to shipment of the material from PNPP.

4.0 PRODUCT CONTROL

Dewatering/Solidification processes will be conducted by qualified PNPP or vendor personnel in accordance with approved plant and/or vendor operating instructions and procedures.

PAP-0525, Solid Radwaste Administration will ensure appropriate documentation and compliance with this program.

4.1 Test Solidification

Test solidifications are performed on waste stream samples to verify plant and/or vendor calculated solidification formulae. Test shall be performed to support solidification mixing formulae as follows: (1) every batch of the same waste type; (2) when sampling analysis falls outside the normal established envelope and preconditioning is ineffective, (3) following any liner of the same waste type where solidification has been determined to be unacceptable; (4) when it is believed that some unexpected or abnormal containment may be present; or (5) when requested by Chemistry Supervision. A batch that requires test solidification shall not be processed until such time as the test solidification proves acceptable. <L00415>

Upon failure of a test solidification, additional samples shall be obtained and testing will continue until a successful solidification has been performed with revised mixing ratios as determined by Chemistry Supervision. Solidification of the batch may then be continued using the alternate solidification parameters defined by testing. All solidifications at Perry will be performed by a vendor with a Topical Report that is accepted by the NRC and destination burial site(s) as meeting all necessary requirements. <B00797>

4.2 Product Quality

Solidification process product quality shall be ensured by the use of predetermined mixing ratios of waste and solidification agents. Mixing ratios are based upon laboratory testing of non-radioactive waste materials and are supported by (1) the test solidifications performed periodically, as mentioned above; (2) periodic checks, visual and physical, of actual processed containers filled with solidified waste; and (3) once every two years requalification of the waste form. Requalification includes testing for compressibility in accordance with ASTM C-39-84, following an appropriate immersion period.

4.3 Acceptability

The acceptability of the solidified product shall be verified by ensuring that less than 0.5% free standing water exists and that the solidified product appears to be able to hold its shape if it were to be removed from the container.

Unacceptable solidified waste shall be handled as follows: (1) if the reason for unacceptability is free standing water, the free standing water will be removed or extra cement/sodium silicate will be added to solidify the free water; (2) if all or portions of the product did not solidify, the waste container will be capped and placed in a storage location in the Radwaste facility and periodically checked until such time that the product is acceptable or it is determined that additional solidification agents can be added to achieve satisfactory solidification. This will be determined by Chemistry Supervision. The handling of unacceptable solidified waste will be on a case-by-case basis.

Adherence to approved dewatering operating procedures ensure the final product will meet or exceed the standing water requirements of 10CFR61.

Dewatering of radioactive bead resin, filter demineralizer media sludge, and traveling belt filter cake shall be performed in accordance with approved operating procedures which are based upon documented test data demonstrating the ability to remove free water volumes below the applicable regulatory limits.

5.0 WASTE CLASSIFICATION, CHARACTERIZATION AND MANIFEST REQUIREMENTS

5.1 Waste Classification

All wastes shall be classified in accordance with the requirements of 10CFR61 as implemented by applicable plant instructions and procedures. Waste classifications may be performed by radwaste shipping computer codes. Analyses shall be performed on the waste streams at least annually (biennially for Class A waste), to determine the isotopic abundance of non-gamma emitting isotopes in the streams. Scaling factors, for the non-gamma emitting and transuranic constituents, will be developed from these analyses. Prior to the establishment of an acceptable data, estimated isotopic concentrations will be those obtained from the "Data Base Analysis Report, August 1985" prepared by Waste Management Group, Inc. (WMG, Inc.).

The activity of each radionuclide in the radioactive waste shall be determined by a calculational method employing the isotopic analysis of the waste and scaling factors or a dose-to-curie conversion. For DAW, a dose-to-curie conversion factor, percent fraction of the radionuclides, and scaling factors will be used to determine activity.

5.2 Waste Characteristics and Manifest Requirements

All wastes shall meet the characteristic requirements of 10CFR61.56 (a) and (b), as applicable, and waste packages shall be marked to identify the waste class. The manifesting requirements of 10CFR20.2006 shall be implemented by PNPP shipping instructions, and radwaste shipping computer codes may be utilized. Records are maintained in accordance with 10CFR71.91.

6.0 ADMINISTRATIVE CONTROLS

Compliance with applicable state and federal regulations, and with burial site criteria is ensured by compliance with the solid radioactive waste surveillance instructions, OM7A: SVI-G51-T5284.
The implementing instructions and procedures for radioactive waste solidification, dewatering, and segregation describe the requirements which must be met prior to processing radioactive waste, as well as the expected condition of the resultant waste form. Test solidifications, full scale calculations and operation of solidification, dewatering and segregation equipment shall be performed by qualified plant staff and vendor personnel. Plant staff personnel shall provide Health Physics and Quality Assurance coverage, operate plant radioactive waste systems, collect waste stream samples, and perform isotopic analyses. Copies of all referenced documents are available onsite for use by personnel engaged in waste processing activities.

Any changes to the Process Control Program shall be reviewed by the Plant Operations Review Committee (PORC) and shall be detailed in the Annual Radioactive Effluent Release Report covering that period.

7.0 QUALITY ASSURANCE

Quality Assurance related activities for the solid radwaste program are implemented as described in the FENOC Quality Assurance Program Manual. These activities shall provide verification that all solid radioactive waste meets applicable State and Federal regulations and burial site criteria. A flow chart illustrating the sequence of events for a waste solidification process is provided in Figure 3.

The FENOC Quality Assurance Program Manual also includes a management review of vendor's Topical Report. This will ensure that the vendor's operations and requirements are compatible with the responsibilities and operations of the plant.

Training and qualification of operators will be performed per Regulatory Guide 1.8 and ANSI N18.1 - 1971.

For accountability of filled waste containers, a clearly legible storage diagram will be permanently displayed near the radwaste control panel. It will show the position of containers holding wastes, and may contain additional information (i.e., the date the wastes were processed, and their dose rate(s)). The storage diagram will be updated to reflect any changes, additions, or deletions to storage.

Radwaste Process Flow Chart

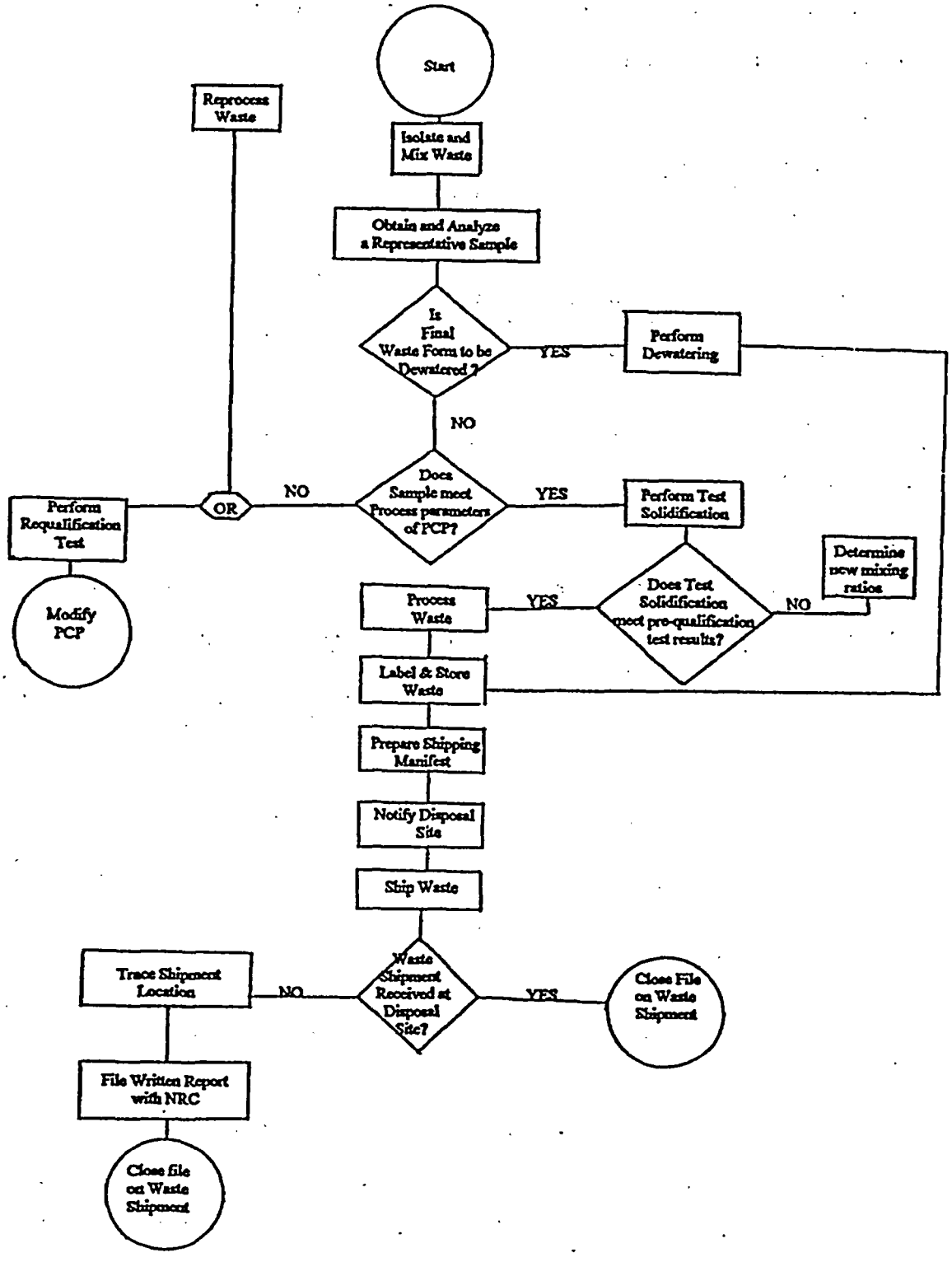

Figure 3

8.0 RECORDS

The following records are generated by this program:

Quality Assurance Records

None

Non-Quality Records

None

9.0 ATTACHMENTS

None

10.0 REFERENCES

10.1 Commitments

The following commitments are wholly or in part met by this document:

B00301 B00797 F01412 F01464 L00415 S00245

APPENDIX A

Controls

INDEX

DEFINITIONS

SECTION

1.0 DEFINITIONS PAGE

1.1 ACTION..... 1-1

1.26 MEMBER(S) OF THE PUBLIC..... 1-1

1.28 OFFSITE DOSE CALCULATION MANUAL..... 1-1

1.29 OPERABLE - OPERABILITY..... 1-1

1.30 OPERATIONAL CONDITION - CONDITION..... 1-1

1.34 PROCESS CONTROL PROGRAM..... 1-2

1.42 SITE BOUNDARY..... 1-2

1.43 SOLIDIFICATION..... 1-2

1.49 UNRESTRICTED AREA..... 1-2

CONTROLS AND SURVEILLANCE REQUIREMENTS

3/4.0 APPLICABILITY..... 3/4 0-1

3/4.11 RADIOACTIVE EFFLUENTS

3/4.11.3 SOLID RADWASTE TREATMENT..... 3/4 2-1

BASES

3/4.0 APPLICABILITY..... B 3/4 0-1

3/4.11.3 SOLID RADIOACTIVE WASTE..... B 3/4 3-1

ADMINISTRATIVE CONTROLS

6.9.1.7 ANNUAL RADIOACTIVE EFFLUENT RELEASE REPORT..... 4-1

6.15 MAJOR CHANGES TO RADIOACTIVE WASTE TREATMENT SYSTEMS..... 4-2

DEFINITIONS

The following terms are defined so that uniform interpretation of these Control may be achieved. The defined terms appear in capitalized type and be applicable throughout these Controls.

ACTION

1.1 ACTION shall be that part of a Control which prescribes remedial measures required under designated conditions.

MEMBER(S) OF THE PUBLIC

1.26 MEMBER(S) OF THE PUBLIC shall include all persons who are not occupationally associated with the plant. This category does not include employees of the utility, its contractors, or vendors. Also excluded from this category are persons who enter the site to service equipment or to make deliveries. This category does include persons who use portions of the site for recreational, occupational, or other purposes not associated with the plant.

OFFSITE DOSE CALCULATION MANUAL (ODCM)

1.28 The OFFSITE DOSE CALCULATION MANUAL shall contain the methodology and parameters used in the calculation of offsite doses due to radioactive gaseous and liquid effluents, in the calculation of gaseous and liquid effluent monitoring alarm/trip setpoints, and in the conduct of the radiological environmental monitoring program.

The ODCM shall also contain (1) the Radioactive Effluent Controls and Radiological Environmental Monitoring Programs required by Specification 6.8.4 and (2) descriptions of the information that should be included in the Annual Radiological Environmental Operating and Annual Radioactive Effluent Release Reports required by Specifications 6.9.1.6 and 6.9.1.7.

OPERABLE - OPERABILITY

1.29 A system, subsystem, train, component or device shall be OPERABLE or have OPERABILITY when it is capable of performing its specified function(s) and when all necessary attendant instrumentation, controls, electrical power, cooling or seal water, lubrication or other auxiliary equipment that are required for the system, subsystem, train, component or device to perform its function(s) are also capable of performing their related support function(s).

OPERATIONAL CONDITION - CONDITION

1.30 An OPERATIONAL CONDITION, i.e., CONDITION, shall be any one inclusive combination of mode switch position and average reactor coolant temperature as specified in Table 1.2.

PROCESS CONTROL PROGRAM (PCP)

1.34 The PROCESS CONTROL PROGRAM shall contain the current formulas (reference vendor topical reports; Mobile Cement Solidification System CNSI-2 and Pacific Nuclear Systems Radwaste Solidification System, TP-05), sampling, analyses, tests, and determinations to be made to ensure that the processing and packaging of solid radioactive wastes based on demonstrated processing of actual or simulated wet solid wastes will be accomplished in such a way as to assure compliance with 10 CFR Part 20, 10 CFR Part 61, 10 CFR Part 71 and Federal and State regulations, burial ground requirements and other requirements governing the disposal of the radioactive waste.

SITE BOUNDARY

1.42 The SITE BOUNDARY shall be that line beyond which the land is neither owned, nor leased, nor otherwise controlled by the licensee.

SOLIDIFICATION

1.43 SOLIDIFICATION shall be the conversion of wet wastes into a form that meets shipping and burial ground requirements.

UNRESTRICTED AREA

1.49 An UNRESTRICTED AREA shall be any area at or beyond the SITE BOUNDARY access to which is not controlled by the licensee for purposes of protection of MEMBERS OF THE PUBLIC from exposure to radiation and radioactive materials, or any area within the SITE BOUNDARY used for residential quarters or for industrial, commercial, institutional, and/or recreational purposes.

TABLE 1.1

SURVEILLANCE FREQUENCY NOTATION

NOTATION	FREQUENCY
S	At least once per 12 hours.
D	At least once per 24 hours.
W	At least once per 7 days.
M	At least once per 31 days.
Q	At least once per 92 days.
SA	At least once per 184 days.
A	At least once per 366 days.
R	At least once per 24 months (731 days).
S/U	Prior to each reactor startup.
P	Completed prior to each release.
N.A.	Not applicable.

TABLE 1.2

OPERATIONAL CONDITIONS

CONDITION	MODE SWITCH POSITION	AVERAGE REACTOR COOLANT TEMPERATURE
1. POWER OPERATION	RUN	Any temperature
2. STARTUP	Startup/Hot Standby**	Any temperature
3. HOT SHUTDOWN	Shutdown#,***	> 200 °F
4. COLD SHUTDOWN	Shutdown#,##,***	≤ 200 °F
5. REFUELING*	Shutdown or Refuel**,#	≤ 140 °F

#The reactor mode switch may be placed in the Run, Startup/Hot Standby, or Refuel position to test the switch interlock functions and related instrumentation provided that the control rods are verified to remain fully inserted by a second licensed operator or other technically qualified member of the unit technical staff.

##The reactor mode switch may be placed in the Refuel position while a single control rod drive is being removed from the reactor pressure vessel per PNPP Unit 1 Technical Specification 3.9.10.1.

*Fuel in the reactor vessel with the vessel head closure bolts less than fully tensioned or with the head removed.

**See Special Test Exceptions 3.10.1 and 3.10.3 in PNPP Unit 1 Technical Specifications.

***The reactor mode switch may be placed in the Refuel position while a single control rod is being recoupled or withdrawn provided that the one-rod-out interlock is OPERABLE.

3/4.0 APPLICABILITY

CONTROLS

3.0.1 Compliance with the Controls contained in the succeeding controls is required during the OPERATIONAL CONDITIONS or other conditions specified therein; except that upon failure to meet the Control, the associated ACTION requirements shall be met.

3.0.2 Noncompliance with a control shall exist when the requirements of the Control and associated ACTION requirements are not met within the specified time intervals. If the Control is restored prior to expiration of the specified time intervals, completion of the Action requirements is not required.

3.0.3 When a Control is not met, except as provided in the associated ACTION requirements, within one hour action shall be initiated to place the unit in an OPERATIONAL CONDITION in which the control does not apply by placing it, as applicable, in:

1. At least STARTUP within the next 6 hours,
2. At least HOT SHUTDOWN within the following 6 hours, and
3. At least COLD SHUTDOWN within the subsequent 24 hours.

Where corrective measures are completed that permit operation under the ACTION requirements, the ACTION may be taken in accordance with the specified time limits as measured from the time of failure to meet the Control. Exceptions to these requirements are stated in the individual controls.

This control is not applicable in OPERATIONAL CONDITIONS 4 or 5.

3.0.4 Entry into an OPERATIONAL CONDITION or other specified condition shall not be made when the conditions for the Control are not met and the associated ACTION requires a shutdown if they are not met within a specified time interval. Entry into an OPERATIONAL CONDITION or other specified condition may be made in accordance with the ACTION requirements when conformance to them permits continued operation of the facility for an unlimited period of time. This provision shall not prevent passage through or to OPERATIONAL CONDITIONS as required to comply with ACTION requirements. Exceptions to these requirements are stated in the individual controls.

APPLICABILITY

SURVEILLANCE REQUIREMENTS

4.0.1 Surveillance Requirements shall be met during the OPERATIONAL CONDITIONS or other conditions specified for individual Controls unless otherwise stated in an individual Surveillance Requirement.

4.0.2 Each Surveillance Requirement shall be performed within the specified surveillance interval with a maximum allowable extension not to exceed 25 percent of the specified surveillance interval.

4.0.3 Failure to perform a Surveillance Requirement within the allowed surveillance interval, defined by control 4.0.2, shall constitute noncompliance with the OPERABILITY requirements for a Control. The time limits of the ACTION requirements are applicable at the time it is identified that a Surveillance Requirement has not been performed. The ACTION requirements may be delayed for up to 24 hours to permit the completion of the surveillance when the allowable outage time limits of the ACTION requirements are less than 24 hours. Surveillance Requirements do not have to be performed on inoperable equipment.

4.0.4 Entry into an OPERATIONAL CONDITION or other specified applicable condition shall not be made unless the Surveillance Requirement(s) associated with the Control have been performed within the applicable surveillance interval or as otherwise specified. This provision shall not prevent passage through or to OPERATIONAL CONDITIONS as required to comply with ACTION requirements.

RADIOACTIVE EFFLUENTS

3/4.11.3 SOLID RADWASTE TREATMENT

CONTROLS

3.11.3 In accordance with PCP Sect.1.34, radioactive wastes shall be SOLIDIFIED or dewatered in accordance with the PROCESS CONTROL PROGRAM to meet shipping and transportation requirements during transit, and disposal site requirements when received at the disposal site.

APPLICABILITY: At all times.

ACTION:

a. With SOLIDIFICATION or dewatering not meeting disposal site and shipping and transportation requirements, suspend shipment of the inadequately processed wastes and correct the PROCESS CONTROL PROGRAM, the procedures and/or the solid waste system as necessary to prevent recurrence.

b. With the SOLIDIFICATION or dewatering not performed in accordance with the PROCESS CONTROL PROGRAM, (1) test the improperly processed waste in each container to ensure that it meets burial ground and shipping requirements and (2) take appropriate administrative action to prevent recurrence.

c. The provisions of Control 3.0.3 are not applicable.

SURVEILLANCE REQUIREMENTS

4.11.3.1 If the SOLIDIFICATION method is used, the PROCESS CONTROL PROGRAM shall be used to verify the SOLIDIFICATION of at least one representative test specimen from at least every tenth batch of each type of wet radioactive waste (e.g., filter sludges, spent resins, evaporator bottoms, and sodium sulfate solutions).

a. If any test specimen fails to verify SOLIDIFICATION, the SOLIDIFICATION of the batch under test shall be suspended until such time as additional test specimens can be obtained, alternative SOLIDIFICATION parameters can be determined in accordance with the PROCESS CONTROL PROGRAM, and a subsequent test verifies SOLIDIFICATION. SOLIDIFICATION of the batch may then be resumed using the alternative SOLIDIFICATION parameters determined by the PROCESS CONTROL PROGRAM.

RADIOACTIVE EFFLUENTS

SURVEILLANCE REQUIREMENTS (Continued)

b. If the initial test specimen from a batch of waste fails to verify SOLIDIFICATION, the PROCESS CONTROL PROGRAM shall provide for the collection and testing of representative test specimens from each consecutive batch of the same type of wet waste until at least three consecutive initial test specimens demonstrate SOLIDIFICATION. The PROCESS CONTROL PROGRAM shall be modified as required, as provided in Perry Nuclear Power Plant Unit 1 TS 6.13, to assure SOLIDIFICATION of subsequent batches of waste.

c. With the installed equipment incapable of meeting Control 3.11.3 or declared inoperable, restore the equipment to OPERABLE status or provide the contract capability to process wastes as necessary to satisfy all applicable transportation and disposal requirements.

BASES FOR

SECTIONS 3.0 AND 4.0

CONTROLS

AND

SURVEILLANCE REQUIREMENTS

NOTE

The BASES contained in succeeding pages summarize the reasons for the Controls in Section 3.0 and 4.0, but are not part of these Controls.

3/4 CONTROLS AND SURVEILLANCE REQUIREMENTS

3/4.0 APPLICABILITY

BASES

Controls 3.0.1 through 3.0.4 establish the general requirements applicable to the Appendix C Controls. These requirements are derived from the requirements for Limiting Conditions for Operation stated in the Code of Federal Regulations, 10 CFR 50.36(c)(2) for plant Technical Specifications.

Control 3.0.1 establishes the Applicability statement within each individual control as the requirement for when (i.e., in which OPERATIONAL CONDITIONS or other specified conditions) conformance to the Control is required for safe operation of the facility. The ACTION requirements establish those remedial measures that must be taken within specified time limits when the requirements of a Control are not met. It is not intended that the shutdown ACTION requirements be used as an operational convenience which permits (routine) voluntary removal of a system(s) or component(s) from service in lieu of other alternatives that would not result in redundant systems or components being inoperable.

There are two basic types of ACTION requirements. The first specifies the remedial measures that permit continued operation of the facility which is not further restricted by the time limits of the ACTION requirements. In this case, conformance to the ACTION requirements provides an acceptable level of safety for unlimited continued operation as long as the ACTION requirements continue to be met. The second type of ACTION requirement specifies a time limit in which conformance to the conditions of the Control must be met. This time limit is the allowable outage time to restore an inoperable system or component to OPERABLE status or for restoring parameters within specified limits. If these actions are not completed within the allowable outage time limits, a shutdown is required to place the facility in an OPERATIONAL CONDITION or other specified condition in which the control no longer applies.

The specified time limits of the ACTION requirements are applicable from the point in time it is identified that a Control is not met. The time limits of the ACTION requirements are also applicable when a system or component is removed from service for surveillance testing or investigation of operational problems. Individual controls may include a specified time limit for the completion of a Surveillance Requirement when equipment is removed from service. In this case, the allowable outage time limits of the ACTION requirements are applicable when this limit expires if the surveillance has not been completed. When a shutdown is required to comply with ACTION requirements, the plant may have entered an OPERATIONAL CONDITION in which a new control becomes applicable. In this case, the time limits of the ACTION requirements would apply from the point in time that the new control becomes applicable if the requirements of the Control are not met.

3/4.0 APPLICABILITY

BASES (Continued)

Control 3.0.2 establishes that noncompliance with a control exists when the requirements of the Control are not met and the associated ACTION requirements have not been implemented within the specified time interval. The purpose of this control is to clarify that (1) implementation of the ACTION requirement within the specified time interval constitutes compliance with a control, and (2) completion of the remedial measures of the ACTION requirements is not required when compliance with a Control is restored within the time interval specified in the associated ACTION requirements.

Control 3.0.3 establishes the shutdown ACTION requirements that must be implemented when a Control is not met and the condition is not specifically addressed by the associated ACTION requirements. The purpose of this control is to delineate the time limits for placing the unit in a safe shutdown CONDITION when plant operation cannot be maintained within the limits for safe operation defined by the Control and its ACTION requirements. It is not intended to be used as an operational convenience which permits (routine) voluntary removal of redundant systems or components from service in lieu of other alternatives that would not result in redundant systems or components being inoperable. One hour is allowed to prepare for an orderly shutdown before initiating a change in plant operation. This time permits the operator to coordinate the reduction in electrical generation with the load dispatcher to ensure the stability and availability of the electrical grid. The time limits specified to reach lower CONDITIONS of operation permit the shutdown to proceed in a controlled and orderly manner that is well within the specified maximum cooldown rate and within the cooldown capabilities of the facility assuming only the minimum required equipment is OPERABLE. This reduces thermal stresses on components of the primary coolant system and the potential for a plant upset that could challenge safety systems under conditions for which this control applies.

If remedial measures permitting limited continued operation of the facility under the provisions of the ACTION requirement are completed, the shutdown may be terminated. The time limits of the ACTION requirements are applicable from the point in time there was a failure to meet a Control. Therefore, the shutdown may be terminated if the ACTION requirements have been met or the time limits of the ACTION requirements have not expired, thus providing an allowance for the completion of the required actions.

3/4.0 APPLICABILITY

BASES (Continued)

The time limits of Control 3.0.3 allow 37 hours for the plant to be in COLD SHUTDOWN when a shutdown is required during POWER operation. If the plant is in a lower CONDITION of operation when a shutdown is required, the time limit for reaching the next lower CONDITION of operation applies. However, if a lower CONDITION of operation is reached in less time than allowed, the total allowable time to reach COLD SHUTDOWN, or other OPERATIONAL CONDITION, is not reduced. For example, if STARTUP is reached in 2 hours, the time allowed to reach HOT SHUTDOWN is the next 11 hours because the total time to reach HOT SHUTDOWN is not reduced from the allowable limit of 13 hours. Therefore, if remedial measures are completed that would permit a return to POWER operation, a penalty is not incurred by having to reach a lower CONDITION of operation in less than the total time allowed.

The same principle applies with regard to the allowable outage time limits of the ACTION requirements, if compliance with the ACTION requirements for one control results in entry into an OPERATIONAL CONDITION or condition of operation for another control in which the requirements of the Control are not met. If the new control becomes applicable in less time than specified, the difference may be added to the allowable outage time limits of the second control. However, the allowable outage time limits of ACTION requirements for a higher CONDITION of operation may not be used to extend the allowable outage time that is applicable when a Control is not met in a lower CONDITION of operation.

The shutdown requirements of Control 3.0.3 do not apply in CONDITIONS 4 and 5, because the ACTION requirements of individual controls define the remedial measures to be taken.

Control 3.0.4 establishes limitations on a change in OPERATIONAL CONDITIONS when a Control is not met. It precludes placing the facility in a higher CONDITION of operation when the requirements for a Control are not met and continued noncompliance to these conditions would result in a shutdown to comply with the ACTION requirements if a change in CONDITIONS were permitted. The purpose of this control is to ensure that facility operation is not initiated or that higher CONDITIONS of operation are not entered when corrective action is being taken to obtain compliance with a control by restoring equipment to OPERABLE status or parameters to specified limits. Compliance with ACTION requirements that permit continued operation of the facility for an unlimited period of time provides an acceptable level of safety for continued operation without regard to the status of the plant before or after a change in OPERATIONAL CONDITION or other specified condition may be made in accordance with the provisions of the ACTION requirements. The provisions of this control should not, however, be interpreted as endorsing the failure to exercise good practice in restoring systems or components to OPERABLE status before plant startup.

3/4.0 APPLICABILITY

BASES (Continued)

When a shutdown is required to comply with ACTION requirements, the provisions of Control 3.0.4 do not apply because they would delay placing the facility in a lower CONDITION of operation.

Controls 4.0.1 through 4.0.5 establish the general requirements applicable to Surveillance Requirements. These requirements are derived from those for Surveillance Requirements stated in the Code of Federal Regulations, 10 CFR 50.36(c)(3) for plant Technical Specifications.

Control 4.0.1 establishes the requirement that surveillances must be performed during the OPERATIONAL CONDITIONS or other conditions for which the requirements of the Controls apply unless otherwise stated in an individual Surveillance Requirement. The purpose of this control is to ensure that surveillances are performed to verify the operational status of systems and components and that parameters are within specified limits to ensure safe operation of the facility when the plant is in an OPERATIONAL CONDITION or other specified condition for which the individual Controls are applicable.

Surveillance Requirements do not have to be performed when the facility is in an OPERATIONAL CONDITION for which the requirements of the associated Control do not apply unless otherwise specified. The Surveillance Requirements associated with a Special Test Exception are only applicable when the Special Test Exception is used as an allowable exception to the requirements of a control.

Control 4.0.2 establishes the limit for which the specified time interval for Surveillance Requirements may be extended. It permits an allowable extension of the specified surveillance interval to facilitate surveillance scheduling and consideration of plant operating conditions that may not be suitable for conducting the surveillance; e.g., transient conditions or other ongoing surveillance or maintenance activities. It also provides flexibility to accommodate the length of a fuel cycle for surveillances that are performed at each refueling outage and are specified with a 24 month surveillance interval.

It is not intended that this provision be used repeatedly as a convenience to extend surveillance intervals beyond that specified for surveillances that are not performed during refueling outages. The limitation of Control 4.0.2 is based on engineering judgment and the recognition that the most probable result of any particular surveillance being performed is the verification of conformance with the Surveillance Requirements. This provision is sufficient to ensure that the reliability ensured through surveillance activities is not significantly degraded beyond that obtained from the specified surveillance interval.

3/4.0 APPLICABILITY

BASES (Continued)

Control 4.0.3 establishes that the failure to perform a Surveillance Requirement within the allowed surveillance interval, defined by the provisions of Control 4.0.2, is a condition that constitutes a failure to meet the OPERABILITY requirements for a Control. Under the provisions of this control, systems and components are assumed to be OPERABLE when Surveillance Requirements have been satisfactorily performed within the specified time interval. However, nothing in this provision is to be construed as implying that systems or components are OPERABLE when they are found or known to be inoperable although still meeting the Surveillance Requirements. This control also clarifies that the ACTION requirements are applicable when Surveillance Requirements have not been completed within the allowed surveillance interval and that the time limits of the ACTION requirements apply from the point in time it is identified that a surveillance has not been performed and not at the time that the allowed surveillance interval was exceeded. Completion of the Surveillance Requirement within the allowable outage time limits of the ACTION requirements restores compliance with the requirements of Control 4.0.3. However, this does not negate the fact that the failure to have performed the surveillance within the allowed surveillance interval, defined by the provisions of Control 4.0.2., constitutes a failure to meet the OPERABILITY requirements for a Control and any reports required by 10 CFR 50.73 shall be determined based on the length of time the surveillance interval has been exceeded, and the corresponding Control ACTION time requirements, similar to those discussed in NUREG-1022, Supplement 1.

If the allowable outage time limits of the ACTION requirements are less than 24 hours or a shutdown is required to comply with ACTION requirements, e.g., Control 3.0.3, a 24-hour allowance is provided to permit a delay in implementing the ACTION requirements. This provides an adequate time limit to complete Surveillance Requirements that have not been performed. The purpose of this allowance is to permit the completion of a surveillance before a shutdown would be required to comply with ACTION requirements or before other remedial measures would be required that may preclude the completion of a surveillance. The basis for this allowance includes consideration for plant conditions, adequate planning, availability of personnel, the time required to perform the surveillance, and the safety significance of the delay in completing the required surveillance. This provision also provides a time limit for the completion of Surveillance Requirements that become applicable as a consequence of CONDITION changes imposed by ACTION requirements and for completing Surveillance Requirements that are applicable when an exception to the requirements of Control 4.0.4 is allowed. If a surveillance is not completed within the 24-hour allowance, the time limits of the ACTION requirements are applicable at that time. When a surveillance is performed within the 24-hour allowance and the Surveillance requirements are not met, the time limits of the ACTION requirements are applicable at the time that the surveillance is terminated.

INSTRUMENTATION

3/4.0 APPLICABILITY

BASES (Continued)

Surveillance Requirements do not have to be performed on inoperable equipment because the ACTION requirements define the remedial measures that apply. However, the Surveillance Requirements have to be met to demonstrate that inoperable equipment has been restored to OPERABLE status.

Control 4.0.4 establishes the requirement that all applicable surveillances must be met before entry into an OPERATIONAL CONDITION or other condition of operation specified in the Applicability statement. The purpose of this control is to ensure that system and component OPERABILITY requirements or parameter limits are met before entry into an OPERATIONAL CONDITION or other specified condition for which these systems and components ensure safe operation of the facility. This provision applies to changes in OPERATIONAL CONDITIONS or other specified conditions associated with plant shutdown as well as startup.

Under the provisions of this control, the applicable Surveillance Requirements must be performed within the specified surveillance interval to assume that the Controls are met during initial plant startup or following a plant outage.

When a shutdown is required to comply with ACTION requirements, the provisions of Control 4.0.4 do not apply because this would delay placing the facility in a lower CONDITION of operation.

RADIOACTIVE EFFLUENTS

BASES

3/4.11.3 SOLID RADIOACTIVE WASTE

This Control implements the requirements of 10 CFR Part 50.36a and General Design Criterion 60 of Appendix A to 10 CFR Part 50. The process parameters included in establishing the PROCESS CONTROL PROGRAM may include, but are not limited to waste type, waste pH, waste/liquid/solidification agent/catalyst ratios, waste oil content, waste principal chemical constituents, mixing and curing times.

ANNUAL RADIOACTIVE EFFLUENT RELEASE REPORT

6.9.1.7 The Annual Radioactive Effluent Release Report shall include a summary of the quantities of radioactive solid waste released from the unit as outlined in Regulatory Guide 1.21, "Measuring, Evaluating, and Reporting Radioactivity in Solid Wastes and Releases of Radioactive Materials in Liquid and Gaseous Effluents from Light-Water-Cooled Nuclear Power Plants,: Revision 1, June 1974, with data summarized on a quarterly basis following the format of Appendix B thereof. For solid wastes, the format for Table 3 in Appendix B shall be supplemented with three additional categories: class of solid wastes (as defined by 10 CFR Part 61), type of container (e.g., LSA, Type A, Type B Large Quantity) and SOLIDIFICATION agent or absorbent (e.g., cement, urea formaldehyde). This report shall also include any changes made during the reporting period to the PROCESS CONTROL PROGRAM (PCP) pursuant to PNPP ORM Section 7.9, as well as any major changes to Solid Radwaste Treatment Systems pursuant to Control 6.15.

6.15 MAJOR CHANGES TO RADIOACTIVE WASTE TREATMENT SYSTEMS*

6.15.1 Licensee initiated major changes to the radioactive waste systems, liquid, gaseous and solid:

1. Shall be reported to the Commission in the Annual Radioactive Effluent Release Report for the period in which the evaluation was reviewed by the PORC. The discussion of each change shall contain:

   a. A summary of the evaluation that led to the determination that the change could be made in accordance with 10 CFR 50.59;

   b. Sufficient detailed information to totally support the reason for the change without benefit of additional or supplemental information;

   c. A detailed description of the equipment, components and processes involved and the interfaces with other plant systems;

   d. An evaluation of the change which shows the predicted releases of radioactive materials in liquid and gaseous effluents and/or quantity of solid waste that differ from those previously predicted in the license application and amendments thereto;

   e. An evaluation of the change which shows the expected maximum exposures to MEMBERS OF THE PUBLIC in the UNRESTRICTED AREA and to the general population that differ from those previously estimated in the license application and amendments thereto;

   f. A comparison of the predicted releases of radioactive materials, in liquid and gaseous effluents and in solid waste, to the actual releases for the period prior to when the changes are to be made;

   g. An estimate of the exposure to plant operating personnel as a result of the change; and

   h. Documentation of the fact that the change was reviewed and found acceptable by the PORC.

2. Shall become effective upon review and acceptance by the PORC.

*Licensee may choose to submit the information called for in this CONTROL as part of the annual USAR update.

REFERENCES

1. Title 10, "Energy", Chapter 1, Code of Federal Regulations, Parts 20, 50, 61, and 71, U.S. Government Printing Office, Washington, D.C. 20402, January 1, 1984.

2. Title 49, "Transportation", Chapter 1, Code of Federal Regulations, Parts 170-178, U.S. Government Printing Office, Washington, D.C. 20402, November 1, 1983.

3. U.S. Nuclear Regulatory Commission, "Standard Radiological Effluent Technical Specifications for Boiling Water Reactors", USNRC NUREG-0473, Revision 3, Washington, D.C. 20555, September 1982.

4. U.S. Nuclear Regulatory Commission, "Low-Level Waste Licensing Branch Technical Position on Radioactive Waste Classification," Revision 0, May 1983.

5. U.S. Nuclear Regulatory Commission, "Branch Technical Position on Waste Form", Revision 0, May 1983.

6. "Standard Test Method for Compressive Strength of Cylindrical Concrete Specimens" ASTM C39-84, American Society for Testing and Materials, Philadelphia, Pennsylvania 19103, 1984.

7. Regulatory Guide 1.8, "Personnel Selection and Training", U.S. Nuclear Regulatory Commission, Washington D.C. 20555, September, 1975.

8. "Selection and Training of Nuclear Power Plant Personnel", ANSI-N18.1-1971, American National Standards Institute, New York, New York 10018, 1971.

9. "Radman - A Computer Code to Classify and Document Packaged LLW in Accordance with 10CFR Part 61 Regulations", WMG-NP-A, Waste Management Group, Inc. Croton-on-the-Hudson, New York 10521, May 1983.

10. "Data Base Analysis Report - Perry Nuclear Power Station", Waste Management Group, Inc., Croton-on-the-Hudson, New York, New York 10521,May 1983.

11. SEG Process Control Program for Dewatering Bead or Powdered Resin with Quick Dry Dewatering System No. 2893, DW-004.

12. Process Control Program for Radwaste Solidification Service No. SS-001. (formerly LN Technologies Corporation)

13. SEG Process Services Topical Report on Radwaste Solidification System, PS-53-0378.

14. Deleted

REFERENCES

15. "Perry Nuclear Power Plant Unit 1 Technical Specifications," The Cleveland Electric Illuminating Company, Perry, Ohio 44081.

16. "Perry Nuclear Power Plant Units 1 and 2, Updated Safety Analysis Report", The Cleveland Electric Illuminating Company, Perry, Ohio 44081.

17. Perry Nuclear Power Plant Operations Manual "SHIPMENT OF RADIOACTIVE MATERIAL/WASTE", NOP-OP-2002, The Cleveland Electric Illuminating Company, Perry, Ohio 44081.

18. Deleted

19. Perry Nuclear Power Plant Operations Manual, "Dry Radioactive Waste Volume Reduction Program", PAP-1901, The Cleveland Electric Illuminating Company, Perry, Ohio 44081.

20. Perry Nuclear Power Plant Operations Manual, "Plant Chemistry Control Program", PAP-1102, The Cleveland Electric Illuminating Company, Perry, Ohio 44081.

21. Deleted

22. Perry Nuclear Power Plant Operations Manual, "Miscellaneous Sampling Systems", CHI-5, The Cleveland Electric Illuminating Company, Perry, Ohio 44081.

23. Deleted

24. Perry Nuclear Power Plant Operations Manual, "Solid Radwaste Solidification System", RWI-G51-SRW, The Cleveland Electric Illuminating Company, Perry, Ohio 44081.

25. Perry Nuclear Power Plant Operations Manual, "Solid Radwaste Compaction System", RWI-G51-SRWC, The Cleveland Electric Illuminating Company, Perry, Ohio 44081.

26. Perry Nuclear Power Plant Operations Manual, "Process Control Program Solidification", SVI-G51-T5284, The Cleveland Electric Illuminating Company, Perry, Ohio 44081.

27. "Barnwell Waste Management Facility Site Disposal Criteria", Document S20-AD-010, Barnwell, South Carolina 29812.

REFERENCES

28. Deleted

29. FENOC Quality Assurance Program Manual

30. Deleted

31. Operating Procedure for the Pacific Nuclear Resin Drying (Dewatering) Systems, OM-43-WS.

32. Topical Report Covering Nuclear Packaging, Inc. Dewatering System, TP-02-P-A.

33. Chem-Nuclear Systems Inc Topical Report for Radioactive Waste Dewatering System, RDS-25506-1-A.

34. Chem-Nuclear Systems Inc Topical Report for Mobile Cement Solidification System, CNSI-2.

35. Setup and Operating Procedure for the RDS-1000 Unit, FO-OP-032.

36. Operating Procedure for the Mobile Cement Solidification Unit No. 221, SD-OP-050.

37. Topical Report covering Pacific Nuclear Systems Radwaste Solidification System, TP-05.

38. Operation and Maintenance Manual for the ATG Radwaste Solidification System, OM-114 NS.

39. System Description of Pacific Nuclear Systems' Radioactive Waste Volume Reduction System, RVR-800.

40. Operation Procedure for Vectra RVR-800-104 Liquid Volume Reduction System at Arizona Public Service Co. Palo Verde OM-0022-WS.

41. Deleted

FirstEnergy	REGULATORY APPLICABILITY DETERMINATION NOP-LP-4003-01 Page 1 of 1	No. 03-01852 Rev. 0
Initiating Activity No. CHI-ODCM		Rev. 10

☐ BVPS 1 ☐ BVPS 2 ☐ DBNPS ☒ PNPP

Title: Offsite Dose Calculation Manual

Brief description of activity (what is being changed and why):

1. **Incorporated a Shielding Factor of 1.0 when calculating compliance with dose rate limits.**
2. **Replaced MPC with EC to reflect current 10CFR20 terminology.**
3. **Changed "10CFR20.106" to "10 CFR20" in section 3.0.1 when referring to gaseous release limits.**
4. **Removed reference to Commitment L01117 since this commitment has been Archived and is no longer active.**
5. **Included provisions for using tritium values for batch releases when composites were not performed in the last composite period prior to the release.**

1. **EXEMPTIONS**

Is scope of the entire the activity exempt from the 10CFR50.59 process because it is limited to:

1.1 Managerial or administrative procedures ..... ☐ YES ☒ NO

1.2 UFSAR changes (or equivalent information) excluded from the requirement to perform a 10CFR50.59 Screen and Evaluation by NEI 98-03? ..... ☐ YES ☒ NO

1.3 Maintenance activities, abandonment or non-reliance on a system to meet a requirement, and temporary alterations planned for 90 days or less while at power ..... ☒ YES ☐ NO

1.4 Changes evaluated under another program that includes screening for 10CFR50.59 applicability ..... ☐ YES ☒ NO

2. **OTHER REGULATIONS**

2.1 Does the activity require a license amendment?

2.1.1 Operating License ..... ☐ YES ☒ NO

2.1.2 Technical Specifications ..... ☐ YES ☒ NO

2.1.3 Environmental Protection Plan ..... ☐ YES ☒ NO

2.2 Does the activity deviate from the requirements of one or more of the following:

2.2.1 Quality Assurance Program (10CFR50.54(a)) ..... ☐ YES ☒ NO

2.2.2 Security Plans (10CFR50.54(p)) ..... ☐ YES ☒ NO

2.2.3 Emergency Plan 10CFR50.54(q)) ..... ☐ YES ☒ NO

2.2.4 IST Program Plan (10CFR50.55(a)(f)) ..... ☐ YES ☒ NO

2.2.5 ISI Program Plan (10CFR50.55(a)(g)) ..... ☐ YES ☒ NO

2.2.6 Fire Protection Program (10CFR50.48) ..... ☐ YES ☒ NO

2.2.7 Independent Spent Fuel Storage Facility (10CFR72.48) ..... ☐ YES ☒ NO

2.2.8 Another regulation:

10 CFR 20 (including ODCM) ..... ☐ YES ☒ NO

10 CFR 50.12 ..... ☐ YES ☒ NO

10 CFR 50.46 ..... ☐ YES ☒ NO

Other - list the regulation(s): _____ ..... ☐ YES ☒ NO

3. **CONCLUSION**

3.1 Does 10CFR50.59 apply? ..... ☐ YES ☒ NO

3.2 Does this activity require a change to the UFSAR? Change Request No: _____ ..... ☐ YES ☒ NO

3.3 Summarize the bases for responses: Include Keywords used to search documents. **The submitted change to the ODCM directly impacts the methodology used to calculate dose rates to demonstrate compliance with dose rate limits. However, the change to the ODCM is being made to ensure the ODCM is compliant with 10CFR20 requirements. Therefore, this change does not deviate from the requirements of 10CFR20. The ODCM is referenced in the USAR. However, the USAR only refers to the ODCM as the governing document for limits, maintenance, and calibration of Radiological Effluent Monitoring Instrumentation (Table 1.8-1, Table 11.5-2, Section 11.5.3.1, Section 14.2.12.2.35). The USAR does not describe the methodology or specific requirements contained within the ODCM. Maintenance activities include troubleshooting, calibration, refurbishment, maintenance-related testing, identical replacements, housekeeping and similar activities that do not permanently alter the design, performance requirements, operation or control of SSCs. The changes to the USAR fall into this exception as a similar activity. Per Technical Specifications Section 5.5.1.a.2, changes to the ODCM must maintain the levels of effluent control specified in 10CFR20.1302, 40CFR190, 10CFR50.36a, 10CFR50 Appendix I. 10CFR20.1302 states the requirements of maintaining dose limits to individual members of the public. 10CFR50.36a governs maintaining doses to the public as low as reasonably achievable through radiological effluent technical specifications and annual reporting to the NRC. 10CFR50 Appendix I defines the design objectives and limiting conditions of**

operation to maintain doses as low as reasonable achievable. 40CFR190 is the Environmental Protection Agency legislation that specifies dose limits to a Member of the Public. These regulatory requirements were evaluated against the changes covered by this revision. This revision to the ODCM did not change or alter compliance with any of the regulations listed in Technical Specification 5.5.1.a.2 because there were no changes made that would alter release rates, dose rates, or doses in such a way where doses would not be maintained as low as reasonably achievable. Furthermore, the change does not alter operation, calibration, or maintenance of any component, equipment, or monitor associated with controlling or monitoring the release of radionuclides from the facility. Keywords searched - Chemistry Instruction, ODCM, dose rate.

Preparer (Print name)	Signature	Date
Phil Lashley		3/4/04
Reviewer (Print name)	**Signature**	**Date**
W. D. MILLS		3/4/04

FirstEnergy	REGULATORY APPLICABILITY DETERMINATION NOP-LP-4003-01 Page 1 of 1	No. 04-00880 Rev. 0
Initiating Activity No. CHI-ODCM		Rev. 11

☐ BVPS 1 ☐ BVPS 2 ☐ DBNPS ☒ PNPP

Title: Offsite Dose Calculation Manual

Brief description of activity (what is being changed and why):
1. Incorporated factors for calculating doses from Au198, Ta183, & Re188 due to these isotopes being detected in Reactor Water.
2. Removed the statement of no continuous liquid releases at Perry from Section 2.1.2 since the M35 drains are treated as a continuous liquid release.

1. **EXEMPTIONS**
Is scope of the entire the activity exempt from the 10CFR50.59 process because it is limited to:
1.1 Managerial or administrative procedures ☒ YES ☐ NO
1.2 UFSAR changes (or equivalent information) excluded from the requirement to perform a 10CFR50.59 Screen and Evaluation by NEI 98-03? ☐ YES ☒ NO
1.3 Maintenance activities, abandonment or non-reliance on a system to meet a requirement, and temporary alterations planned for 90 days or less while at power ☐ YES ☒ NO
1.4 Changes evaluated under another program that includes screening for 10CFR50.59 applicability ☐ YES ☒ NO

2. **OTHER REGULATIONS**
2.1 Does the activity require a license amendment?
2.1.1 Operating License ☐ YES ☒ NO
2.1.2 Technical Specifications ☐ YES ☒ NO
2.1.3 Environmental Protection Plan ☐ YES ☒ NO
2.2 Does the activity deviate from the requirements of one or more of the following:
2.2.1 Quality Assurance Program (10CFR50.54(a)) ☐ YES ☒ NO
2.2.2 Security Plans (10CFR50.54(p)) ☐ YES ☒ NO
2.2.3 Emergency Plan (10CFR50.54(q)) ☐ YES ☒ NO
2.2.4 IST Program Plan (10CFR50.55(a)(f)) ☐ YES ☒ NO
2.2.5 ISI Program Plan (10CFR50.55(a)(g)) ☐ YES ☒ NO
2.2.6 Fire Protection Program (10CFR50.48) ☐ YES ☒ NO
2.2.7 Independent Spent Fuel Storage Facility (10CFR72.48) ☐ YES ☒ NO
2.2.8 Another regulation
10 CFR 20 (including ODCM) ☐ YES ☒ NO
10 CFR 50.12 ☐ YES ☒ NO
10 CFR 50.46 ☐ YES ☒ NO
Other - list the regulation(s): _____ ☐ YES ☒ NO

3. **CONCLUSION**
3.1 Does 10CFR50.59 apply? ☐ YES ☒ NO
3.2 Does this activity require a change to the UFSAR? Change Request No: _____ ☐ YES ☒ NO
3.3 Summarize the bases for responses. Include Keywords used to search documents. **The ODCM is referenced in the USAR. However, the USAR only refers to the ODCM as the governing document for limits, maintenance, and calibration of Radiological Effluent Monitoring Instrumentation (Table 1.8-1, Table 11.5-2, Section 11.5.3.1, Section 14.2.12.2.35). The USAR does not describe the methodology or specific requirements contained within the ODCM. Maintenance activities include troubleshooting, calibration, refurbishment, maintenance-related testing, identical replacements, housekeeping and similar activities that do not permanently alter the design, performance requirements, operation or control of SSCs. The changes to the USAR fall into this exception as a similar activity. Per Technical Specifications Section 5.5.1.a.2, changes to the ODCM must maintain the levels of effluent control specified in 10CFR20.1302, 40CFR190, 10CFR50.36a, 10CFR50 Appendix I. 10CFR20.1302 states the requirements of maintaining dose limits to individual members of the public. 10CFR50.36a governs maintaining doses to the public as low as reasonably achievable through radiological effluent technical specifications and annual reporting to the NRC. 10CFR50 Appendix I defines the design objectives and limiting conditions of operation to maintain doses as low as reasonable achievable. 40CFR190 is the Environmental Protection Agency legislation that specifies dose limits to a Member of the Public. These regulatory requirements were evaluated against the changes covered by this revision. This revision to the ODCM did not change or alter compliance with any of the regulations listed in Technical Specification 5.5.1.a.2 because there were no changes made that**

FirstEnergy	REGULATORY APPLICABILITY DETERMINATION NOP-LP-4003-01 Page 2 of 2	No. 04-00880 Rev. 0
Initiating Activity No. CHI-ODCM		Rev. 11

would alter release rates, dose rates, or doses in such a way where doses would not be maintained as low as reasonably achievable. Furthermore, the change does not alter operation, calibration, or maintenance of any component, equipment, or monitor associated with controlling or monitoring the release of radionuclides from the facility. The change was evaluated against the FENOC 10CFR50.59 guidelines for changes covered by another regulation (Question 2.2.8). In this instance, the change was determined not to meet any of the criteria that would require an evaluation by Design Engineering/Balance of Plant. Since the change does not change any calculation methodology and only provides factors for nuclides that are not currently present in the ODCM, the change is deemed to be Administrative. Additionally, removal of the statement regarding no continuous liquid releases appears to be an oversight from earlier changes since the M35 drains are covered in detail in other areas of the manual. Keywords searched - Chemistry Instruction, ODCM, dose rate.

Preparer (Print name) Phil Lashley	Signature	Date 6/23/04
Reviewer (Print name) ROONEY E STATES	Signature	Date 6/25/04

PERRY OPERATIONS MANUAL

Offsite Dose Calculation Manual

TITLE: OFFSITE DOSE CALCULATION MANUAL

REVISION: 11 EFFECTIVE DATE: 7-27-04

PREPARED: P. H. Lashley 6-23-04
/ Date

Offsite Dose Calculation Manual

Table of Contents

Section	Title	Page
1.0	INTRODUCTION	1
2.0	LIQUID EFFLUENTS	2
2.1	Batch Releases	2
2.1.1	Monitor Alarm Setpoint Determination	3
2.1.1.1	Minimum Acceptable Dilution Factor Determination	3
2.1.1.2	Maximum Allowable Radwaste Tank Discharge Flow Rate Determination	4
2.1.1.3	Liquid Radwaste Discharge Flow Monitor Alarm Setpoint	4
2.1.1.4	Liquid Radwaste Discharge Radiation Monitor Alarm/Trip Setpoint	5
2.1.2	10CFR20 Compliance - Liquid Effluent Concentration	6
2.1.2.1	Concentration of Radionuclides in Prerelease	7
2.1.2.2	Post Release	7
2.2	Continuous Releases	8
2.2.1	Monitor Alarm Setpoint Determination	9
2.2.1.1	Emergency Service Water Radiation Monitor Alarm Setpoint	9
2.2.1.2	Minimum Allowable Background of the Emergency Service Water Radiation Monitor	10
2.2.1.3	Determination of the Expected Monitor Response Based on the Reactor Water Source Term	10
2.2.1.4	Minimum Allowable Setpoint Based on Monitor Background	11
2.3	10CFR50, Appendix I Compliance - Liquid Effluent Dose	11
2.3.1	Dose Calculations	12
2.3.2	Cumulation of Doses	13
2.3.3	Projection of Doses	14
2.3.4	Population Dose	14
3.0	GASEOUS EFFLUENTS	32
3.0.1	Batch Releases	32
3.0.2	Continuous Releases	32
3.1	Monitor Alarm Setpoint Determination	34
3.1.1	Determination of the "Mix" (Noble Gas Radionuclide Composition) of the Gaseous Effluent	35
3.1.2	Determination of the Maximum Acceptable Total Activity Release Rate of Noble Gas Radionuclides in Gaseous Effluent Based on Whole Body Dose Rate Limit	35
3.1.3	Determination of the Maximum Acceptable Total Activity Release Rate of Noble Gas Radionuclides in Gaseous Effluent Based on Skin Dose Rate Limit	36
3.1.4	Determination of the Maximum Acceptable Total Radioactivity Concentration of all Noble Gas Radionuclides in Gaseous Effluent	37
3.1.5	Determination of the Maximum Acceptable Monitor Count Rate Above Background Attributed to Noble Gas Radionuclides	38

Offsite Dose Calculation Manual

Table of Contents (Cont.)

Section	Title	Page
3.1.5.1	Determination of the Monitor High Alarm Setpoint	38
3.1.5.2	Determination of the Monitor Alert Setpoint	39
3.2	Compliance with 10CFR20 - Gaseous Effluent Dose Rate	39
3.2.1	Noble Gases	39
3.2.2	Radionuclides, Particulates, and Other Radionuclides	40
3.2.3	Dose Rate Calculations	40
3.3	10CFR50, Appendix I Compliance - Gaseous Effluent Dose	68
3.3.1	Noble Gases	68
3.3.2	Radioiodines, Particulates, and Other Radionuclides	68
3.3.3	Dose Calculations	69
3.3.4	Cumulation of Doses	70
3.3.5	Projection of Doses	71
3.4	Population Dose	71
4.0	TOTAL DOSE	72
4.1	40CFR190 Compliance - Uranium Fuel Cycle Dose	72
4.2	Direct Radiation Dose from PNPP	73
4.3	Dose to Members of the Public While Onsite	74
5.0	RADIOLOGICAL ENVIRONMENTAL MONITORING PROGRAM	74
5.1	Monitoring Program	74
5.2	Land Use Census Program	75
5.3	Inter-Laboratory Comparison Program	76
APPENDIX A	Atmospheric Dispersion and Deposition Parameters	87
APPENDIX B	Lower Limit of Detection	101
APPENDIX C	Controls	105
REFERENCES		186

List of Tables

Table	Title	Page
2.3-1	Organs Used for Liquid Effluent Dose Calculations	15
2.3-2	Age Groups Used for Liquid Effluent Dose Calculations	15
2.3-3	Liquid Effluent Dose Pathways	15
2.3-4	Bio-Accumulation Factors (B_{ip}) (pCi/kg per pCi/liter)	16
2.3-5	Ingestion Dose Factors for Adult (mrem/pCi ingested)	17
2.3-6	Ingestion Dose Factors for Teenager (mrem/pCi ingested)	19
2.3-7	Ingestion Dose Factors for Child (mrem/pCi ingested)	21
2.3-8	Ingestion Dose Factors for Infant (mrem/pCi ingested)	23
2.3-9	External Dose Factors for Standing on Contaminated Ground	25
2.3-10	Liquid Effluent Dilution Factors (M_p)	27
2.3-11	Transit Times Required for Nuclides to Reach the Point of Exposure (t_p)	27
2.3-12	Usage Factors (U_{ap})	28
2.3-13	Dilution Factors for Each of the Potable Water Intakes within 50 Miles of PNPP	29
2.3-14	Dilution Factors for the Fish Ingestion Pathway Individual Grid Locations	30
2.3-15	Dilution Factors for the Shore Exposure Pathway	31
3.1-1	Whole Body and Skin Dose Factors	37
3.2-1	Organs Used for Gaseous Effluent Dose Calculations	46
3.2-2	Age Groups Used for Gaseous Effluent Dose Calculations	46
3.2-3	Gaseous Effluent Dose Pathways	46
3.2-4	Dose Factors for Exposure to a Semi-Infinite Cloud of Noble Gases	47
3.2-5	External Dose Factors for Standing on Contaminated Ground	48
3.2-6	Inhalation Dose Factors for Adult (mrem/pCi inhaled)	50

List of Tables (Cont.)

Table	Title	Page
3.2-7	Inhalation Dose Factors for Teenager (mrem/pCi inhaled)	52
3.2-8	Inhalation Dose Factors for Child (mrem/pCi inhaled)	54
3.2-9	Inhalation Dose Factors for Infant (mrem/pCi inhaled)	56
3.2-10	Ingestion Dose Factors for Adult (mrem/pCi ingested)	58
3.2-11	Ingestion Dose Factors for Teenager (mrem/pCi ingested)	60
3.2-12	Ingestion Dose Factors for Child (mrem/pCi ingested)	62
3.2-13	Ingestion Dose Factors for Infant (mrem/pCi ingested)	64
3.2-14	Annual Usage Factors for the Maximum Exposed Individual	66
3.2-15	Annual Usage Factors for the Average Individual	66
3.3-1	Gamma and Beta Air Dose Factors for Semi-Infinite Plume	71
5.1-1	Radiological Environmental Monitoring Program	77
5.1-2	Reporting Levels for Radioactivity Concentrations in Environmental Samples	82
5.1-3	Detection Capabilities for Environmental Sample Analysis and Lower Limit of Detection (LLD)	83
A-1	Atmospheric Depletion and Deposition Factors	89
A-2	Site Boundary Atmospheric Dispersion (χ/Q) and Deposition Parameters (D/Q) for PNPP Unit 1	90
A-3	Atmospheric Dispersion (χ/Q) as a Function of Distance (s/m^3)	91
A-4	Atmospheric Dispersion (D/Q) as a Function of Distance (m^{-2})	96

List of Figures

Figures	Title	Page
2.1-1	Liquid Radioactive Waste (LRW) Discharge System	2
3.0-1	Gaseous Effluent System Flow Diagram	33
3.2-1	PNPP Site Boundary and Unrestricted Area	67
5.1-1	Technical Specification Required REMP Sampling Locations within Two Miles of the Plant Site	84
5.1-2	Technical Specification Required REMP Sampling Locations Between Two and Eight Miles from the Plant Site	85
5.1-3	Technical Specification Required REMP Sampling Locations Greater Than Eight Miles from the Plant Site	86

SCOPE OF REVISION:

Rev. 11 -

1. Included factors for calculating doses for Ta183, Re188, & Au198.
2. Removed statement from Section 2.1.2 regarding no continuous liquid releases being present at Perry since the Turbine Building Ventilation System (M35) system drain discharge does contain radioactivity.

1.0 INTRODUCTION

This Offsite Dose Calculation Manual (ODCM) contains information and methodologies to be used by the Perry Nuclear Power Plant (PNPP), Unit 1, to ensure compliance with PNPP Radiological Effluent Technical Specifications. The Technical Specifications and this ODCM are written to satisfy 10CFR20, 10CFR50.36 and Appendix I, and 40CFR190 requirements.

Sections 2 and 3 of this manual deal with liquid and gaseous radiological effluents, respectively. Each of these sections contain alarm setpoint determination, radiation dose and dose rate calculation methodologies, as well as limits and requirements. Section 4 covers uranium fuel cycle related radiation dose limits including direct dose.

Also included in this manual, in Section 5, is information relating to the Radiological Environmental Monitoring Program (REMP). The figures and tables contained therein designate specific sample types and locations currently used to satisfy the Technical Specification requirements for the REMP as well as sampling reporting and detection capability limits. The sample types and locations are subject to change based on factors including the results of the annual Land Use Census.

The ODCM has been prepared, as generally as possible, in order to minimize future revisions. However, any such changes will be reviewed and approved as per the Administrative Control Section of the PNPP Technical Specifications.

Supplemental information needed to support calculations is contained in the appendices at the end of this manual. Appendix A contains atmospheric dispersion and deposition parameters and Appendix B presents the methodology for determining the lower limit of detection (LLD).

Appendix C of the ODCM was prepared based on guidance of NUREG-1302, "Offsite Dose Calculation Manual Guidance: Standard Radiological Effluent Controls for Boiling Water Reactors," Generic Letter 89-01, Supplement No. 1. This appendix along with plant procedures will be used by plant personnel to demonstrate compliance with Specification 5.5.4 (Radioactive Effluent Controls Program) of the PNPP Technical Specifications. <L02211>

2.0 LIQUID EFFLUENTS

2.1 Batch Releases

A batch release is the discharge liquid radioactive waste of a discrete volume. Batch releases from the liquid radwaste system may occur from any of the following tanks: waste sample tank, floor drain sample tank, chemical waste distillate tank, and detergent drain tank (see Figure 2.1-1). The maximum release rate possible, due to pump capacity, is 200 gallons per minute from all release tanks except the detergent drain tanks, which have a maximum release rate of 50 gallons per minute. All of the above liquid radwaste releases go to the Emergency Service Water discharge which is then released through the discharge tunnel after mixing with Service Water effluent and/or and blowdown from Circulating Water system, if present.

Figure 2.1-1

Liquid Radioactive Waste (LRW) Discharge System

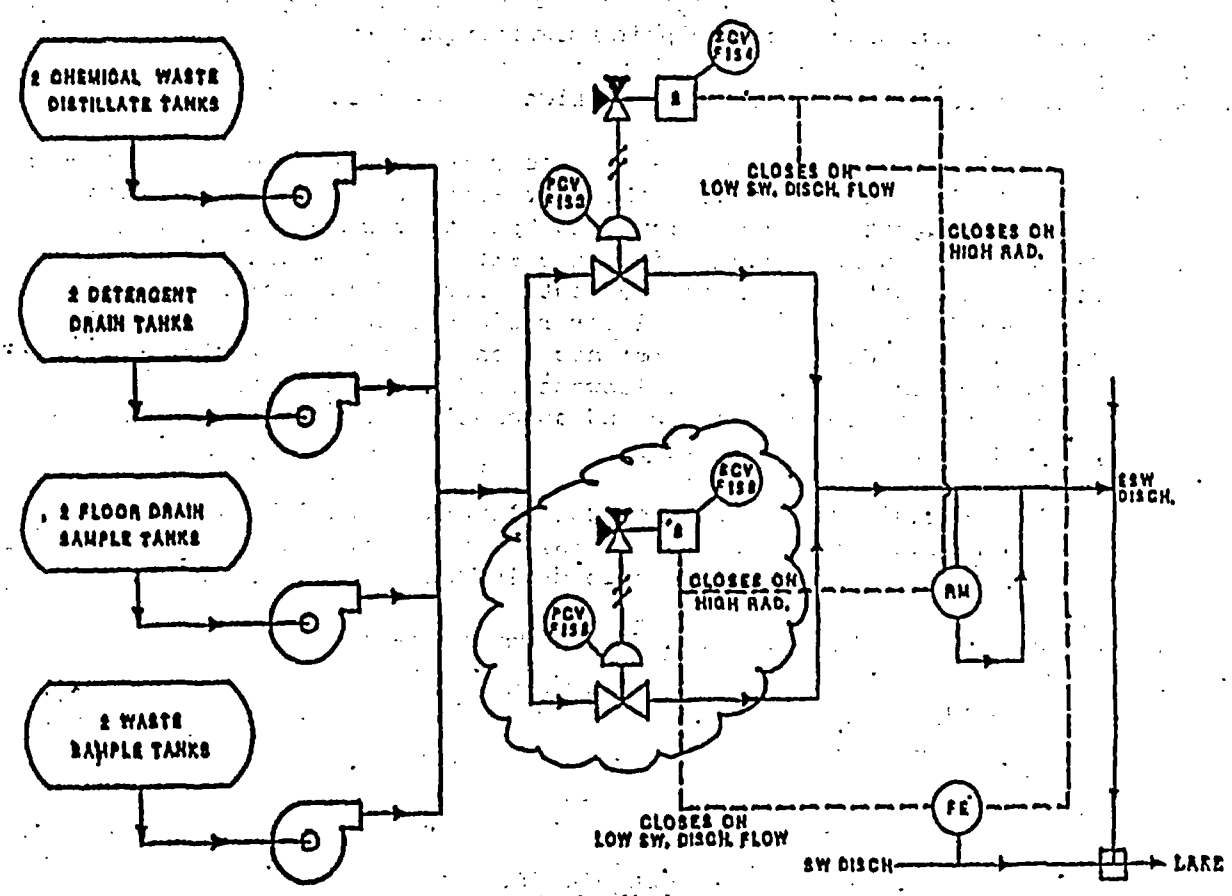

Abandoned in place

The type and frequency of sampling and analysis required by the ODCM is given in Appendix C, Table 4.11.1.1.1-1. Prior to sampling for analysis, each batch should be isolated, and thoroughly mixed to assure representative sampling. For mixing, the contents of the tank are recirculated by isolating the tank and turning on equipment that takes suction from and discharges back into the tank. Recycle lines are provided with one or more mixing eductors located near the bottom of the tanks to promote better mixing as well as reducing recirculation time. This ensures that the water in the tank will be mixed and will be representative of the activity in the tank. The minimum recirculation performed is the equivalent of two volumes of the tank contents.

Monitor alarm setpoints will be determined in order to ensure compliance with 10CFR20. The radioactive content of each batch release will be determined prior to release in accordance with ODCM, Appendix C, Table 4.11.1.1.1-1. Concentrations for tritium and other non-gamma emitting isotopes will be those most recently determined in the previous month/quarter. If there are no tritium results from the most recent month the most recent steam cycle value may be used as this will be a conservative number used for calculating batch releases. If there is sufficient time prior to a planned release, a composite of samples that are expected to be representative of the release may be analyzed for the tritium and other non-gamma emitting isotope values.

2.1.1 Monitor Alarm Setpoint Determination

The following methodology is used to calculate the setpoints for the Radwaste Discharge Radiation Monitor - ESW Discharge and Liquid Radwaste Adjustable High Flow Trip Unit to ensure that liquid radwaste effluent releases from the site to unrestricted areas are below the limiting effluent concentrations (EC) specified in 10CFR20, Appendix B, Table 2, Column 2 for radionuclides other than noble gases. An EC of 2.0E-4 µCi/ml has been established for dissolved and entrained noble gases. The Radwaste Discharge Radiation Monitor - ESW Discharge provides alarm and automatic termination of releases prior to exceeding these limits.

NOTE: Liquid radwaste discharge flow rate shall be verified at least once per four hours, whenever the flow rate measuring device(s) is inoperable during actual releases.

2.1.1.1 Minimum Acceptable Dilution Factor Determination:

$$DF_o = \sum \frac{C_i}{EC_i} \qquad (2.1\text{-}1)$$

Where:

DF_o = the minimum acceptable dilution factor determined from analysis of the liquid effluent to be released;

C_i = the concentration of radionuclide "i" in the batch to be released, µCi/ml. If the concentration of a radionuclide is below the lower limit of detection, the radionuclide shall not be included as a source term in the setpoint calculation.

EC_i = the limiting effluent concentration of radionuclide "i", from 10CFR20, Appendix B, Table 2, Column 2, in µCi/ml and (2.0E-4 µCi/ml for noble gases).

$$DF = 10DF_o \qquad (2.1\text{-}2)$$

Where:

DF = the conservative dilution factor used by PNPP to calculate the maximum release rate prior to release in order to ensure compliance with 10CFR20;

DF_o = the minimum acceptable dilution factor, as per equation 2.1-1;

10 = a factor of ten less than 10CFR20, Appendix B, Table 2, Column 2, limits; which represents an order of magnitude of conservatism for liquid radwaste releases from PNPP.

2.1.1.2 Maximum Allowable Radwaste Tank Discharge Flow Rate Determination

$$f_{max} = \frac{(0.64)(mdf)}{DF} \qquad (2.1\text{-}3)$$

Where:

f_{max} = the maximum allowable radwaste tank discharge flow rate for the batch to be released, gpm;

DF = the conservative dilution factor, per equation 2.1-2;

mdf = the minimum dilution flow - supplied by the Service Water system, Emergency Service Water system, or Circulating Water system blowdown, gpm;

0.64 = an engineering factor to prevent spurious alarms.

2.1.1.3 Liquid Radwaste Discharge Flow Monitor Alarm Setpoint <L00434>

Monitor alarm setpoints are determined to ensure that the concentration of radionuclides in the liquid radwaste effluent released from PNPP to unrestricted areas does not exceed the limits specified in 10CFR20, Appendix B, Table 2, Column 2, for radionuclides other than dissolved and entrained noble gases. A limiting effluent concentration of 2.0E-4 µCi/ml has been established for dissolved and entrained noble gases in liquid effluents.

$$SP_f = (1.25)(f_{act}) \quad (2.1\text{-}4)$$

Where:

SP_f = liquid radwaste adjustable high flow trip Unit (G50-K805A/B or G50-K926/7) alarm setpoint, gpm;

f_{act} = actual allowable radwaste tank discharge flow rate for the batch to be released, not to exceed the maximum allowable radwaste discharge flow rate f_{max} as defined in equation 2.1-3, gpm;

1.25 = engineering safety factor to prevent spurious alarms.

The liquid radwaste tank discharge flow should be maintained at or below this f_{act} value by proper regulation of the high volume discharge throttle valves (G50-F153 or G50-F155).

2.1.1.4 Liquid Radwaste Discharge Radiation Monitor Alarm/Trip Setpoint

Monitor alarm/trip setpoints are determined to ensure that the concentration of radionuclides in the liquid radwaste effluent released from PNPP to unrestricted areas does not exceed the limits specified in 10CFR20, Appendix B, Table 2, Column 2 for radionuclides other than dissolved or entrained noble gases. A limiting effluent concentration of 2.0E-4 µCi/ml has been established for dissolved and entrained noble gases in liquid effluents.

$$CR_c = \Sigma (C_i)(E_i) \quad (2.1\text{-}5)$$

Where:

CR_c = the calculated monitor count rate above background, cpm;

C_i = the concentration of radionuclide "i" in the batch to be released, µCi/ml;

E_i = the detector efficiency of the monitor for radionuclide "i", cpm/(µCi/ml).

<u>OR</u>

$$CR_x = (R_s)(F_x)(\Sigma C_i) \quad (2.1\text{-}6)$$

Where:

CR_x = the cross-calibrated monitor count rate above background, cpm;

F_x = the cross-calibration factor is used to ratio the liquid radwaste discharge radiation monitor actual response to the Cs-137 calibrated response;

R_s = the response of the Liquid Radwaste Discharge Radiation Monitor to a Cs-137 calibrated standard, cpm/(μCi/ml).

$$SP_r = (1.25)\left(\frac{f_{max}}{f_{act}}\right)(CR_n) + BG \qquad (2.1\text{-}7)$$

Where:

SP_r = the Radwaste Discharge Radiation Monitor - ESW Discharge alarm/trip setpoint; in cpm;

BG = background count rate due to internal contamination and radiation levels in the area of the monitor, cpm;

CR_n = monitor net count rate, either CR_c or CR_x, as per equation 2.1-5 or 2.1-6, cpm;

1.25 = engineering safety factor to prevent spurious alarms;

f_{max}/f_{act} = an adjustment factor (to account for the difference between an actual radwaste discharge flow rate to be used for the discharge and maximum allowable radwaste discharge flow rate) to allow operational flexibility and to minimize spurious alarms;

Where:

f_{act} = the actual radwaste discharge flow rate, this value must always be less than or equal to f_{max}, gpm;

f_{max} = the maximum allowable radwaste discharge flow rate, per equation 2.1-3, gpm.

2.1.2 10CFR20 Compliance - Liquid Effluent Concentration

In order to show compliance with 10CFR20, the concentrations of radionuclides in liquid effluents will be determined and compared with the limiting effluent concentrations as defined in 10CFR20, Appendix B, Table 2, Column 2, (2.0E-4 μCi/ml for dissolved and entrained noble gases). Concentrations of radioactivity in effluents prior to dilution will be determined. Concentration in diluted effluent will be calculated using these results prior to each batch release, and following each batch release.

2.1.2.1 Concentration of Radionuclides in Prerelease

The radioactivity content of each batch release will be determined prior to release. PNPP will show compliance with 10CFR20 in the following manner:

The concentration of the various radionuclides in batch releases prior to dilution is divided by the minimum dilution flow to obtain the concentration at the unrestricted area. This calculation is shown in the following equation:

$$Conc_i = \frac{(C_i)(f)}{mdf} \qquad (2.1\text{-}8)$$

Where:

$Conc_i$ = the concentration of radionuclide "i" at the unrestricted area, µCi/ml;

C_i = the concentration of radionuclide "i" in the batch to be released, µCi/ml;

f = the radwaste tank discharge flow rate for the batch to be released, gpm;

mdf = the minimum dilution flow, per equation 2.1-3, gpm.

The projected radionuclide concentrations in the unrestricted area are compared to the limiting effluent concentrations in 10CFR20, Appendix B, Table 2, Column 2 (2.0E-4 µCi/ml for dissolved and entrained noble gases) in order to give a final 10CFR20 compliance check, i.e., the following equation must be met:

$$\sum \frac{Conc_i}{EC_i} \leq 1 \qquad (2.1\text{-}9)$$

Where:

$Conc_i$ = the concentration of radionuclide "i" at the unrestricted area, µCi/ml;

EC_i = the limiting effluent concentration of radionuclide "i", from 10CFR20, Appendix B, Table 2, Column 2 (2.0E-4 µCi/ml for dissolved and entrained noble gases), µCi/ml.

2.1.2.2 Post Release

The actual radioactivity content of each batch release will be determined following release to show final compliance with 10CFR20.

The concentration of the various radionuclides in batch releases prior to dilution is divided by the actual dilution to obtain the concentration at the unrestricted area. This calculation is shown in the following equation:

$$Conc_i = \frac{(C_i)(V_{lrt})}{V_{dil}} \qquad (2.1\text{-}10)$$

Where:

$Conc_i$ = the actual concentration of radionuclide "i" at the unrestricted area for the release, µCi/ml;

C_i = the concentration of radionuclide "i" in the batch released, µCi/ml;

V_{dil} = the actual volume of dilution water during the release (total plant discharge flow, including Service Water, Emergency Service Water, and cooling tower blowdown), in gallons;

V_{lrt} = the actual volume of the liquid radwaste tank discharged for the batch, gal.

The concentrations in the unrestricted area are compared to the limiting effluent concentrations in 10CFR20, Appendix B, Table 2, Column 2 (2.0E-4 µCi/ml for dissolved and entrained noble gases). In order to demonstrate final compliance with 10CFR20, the following equation must be met:

$$\sum \frac{Conc_i}{EC_i} \leq 1 \qquad (2.1\text{-}11)$$

Where:

$Conc_i$ = concentration of radionuclide "i" at the unrestricted area, µCi/ml;

EC_i = limiting effluent concentration of radionuclide "i", from 10CFR20, Appendix B, Table 2, Column 2, µCi/ml.

2.2 Continuous Releases

A continuous release is the discharge of fluid wastes of a non-discrete volume, i.e., from a volume or system that has an input flow during the continuous release. The only potential for a continuous release at Perry is for RHR heat exchange leakage into the Emergency Service Water system and for tritium activity in the M35 Supply Plenum drain to storm drains.

Potentially contaminated discharges from the ESW are monitored by an installed radiation monitoring system. This system consists of two channels, one for monitoring downstream of equipment in Emergency Service Water System Loop A and the other for Emergency Service Water Loop B. If radiation is detected, the affected Emergency Service Water line can be manually isolated. The decision of whether to isolate or not is dependent upon other conditions. The PNPP staff will take appropriate action to limit release.

The Emergency Service Water discharged will be sampled and analyzed in accordance with ODCM Appendix C, Table 4.11.1.1.1-1. To show compliance with 10CFR20, the sum of the concentrations of radionuclide "i" in unrestricted areas due to both continuous and batch releases divided by that isotope's limiting effluent concentration must be less than 1.

During the summer months, the Turbine Building Supply Plenums (1M35B0001A,B,C) are used as a cooling source; condensation from the cooling coils is collected in the M35 plenum drain pans. The moisture from the outside air is condensed and flows into the drain pan. During hot, humid months with low wind speed, the potential exists for some of the gaseous effluent exhaust from the plant to be recycled back into the plant through the M35 Turbine Building Supply Plenums. Since the air from the plant gaseous effluents can contain tritium, then the water in the M35 Turbine Building Supply Plenums could also contain tritium if this exhaust was recycled back into the plant. The highest possible concentration of tritium in the M35 drains would be the condensed concentration in the effluent vent; however, this value is further diluted from humidity from outside air. The gaseous effluent vents radiation monitors will provide the monitoring to ensure compliance with 10CFR20. Grab samples will be performed in accordance with ODCM Appendix C Table 4.11.1.1.1-1 on the M35 drains.

2.2.1 Monitor Alarm Setpoint Determination

The following methodology is used to calculate the setpoints for the Emergency Service Water loops A & B Radiation Monitors. This methodology ensures an alarm will be received prior to exceeding the limiting effluent concentration listed in 10CFR20, Appendix B, Table 2, Column 2.

1. Emergency Service Water Radiation Monitor Alarm Setpoint

$$CR_C = (BG + MR)(0.75)$$

Where:

CR_C = the calculated monitor count rate in cpm;

BG = the background count rate due to internal contamination and radiation levels in the area of the monitor in cpm;

MR = expected monitor response due to 1.0 EC of a typical reactor water isotopic mix;

0.75 = engineering safety factor

2. Minimum Allowable Background of the Emergency Service Water Radiation Monitor

$$BG_{min} = CR_c - MR$$

Where:

BG_{min} = minimum allowable background to ensure monitor will alarm prior to exceeding 1.0 EC;

CR_c = the calculated monitor count rate in cpm;

MR = expected monitor response due to 1.0 EC of a typical reactor water isotopic mix;

<u>NOTE</u>: If calculated value is negative, then 0 cpm will be used as the minimum allowable background.

3. Determination of the Expected Monitor Response Based on the Reactor Water Source Term

$$MR = \Sigma \left[\frac{I_{decayed}}{\Sigma \frac{I_{decayed}}{EC_i}} \times Eff_{mon} \right]$$

Where:

MR = expected monitor response due to 1.0 EC of a typical reactor water isotopic mix;

$I_{decayed}$ = activity of isotope (I) after decaying a given time;

Eff_{mon} = radiation monitor detector efficiency for isotope (I);

EC_i = Effluent concentration value for isotope (I), Appendix B, Table 2, Column 2, 10CFR20

4. Minimum Allowable Setpoint Based on Monitor Background

$$CR_{min} = BG + \left(2\sqrt{BG / 2TC}\right)$$

Where:

CR_{min} = Minimum allowable setpoint for a given monitor background (BG);

BG = the background count rate due to internal contamination and radiation levels in the area of the monitor in cpm;

2 = 95% confidence level;

2TC = two times the instrument time constant where

$$TC = \frac{\left(Log_{10}BG - Log_{10}Locpm\right)\left(TC_{hicpm} - TC_{locpm}\right)}{\left(Log_{10}Hicpm - Log_{10}Locpm\right)} + TC_{locpm}$$

Time Constants:

Hi/Lo cpm	TC Hi/Lo cpm
10 cpm	1.25 min
100 cpm	1.25 min
1,000 cpm	1.25 min
10,000 cpm	0.2 min
100,000 cpm	0.042 min
1,000,000 cpm	0.0033 min

For Backgrounds less than 400 cpm, the following values will be used:

Locpm = 100 cpm TC_{locpm} = 1.25 min
Hicpm = 1000 cpm TC_{Hicpm} = 1.25 min

For Backgrounds ≥ 400 cpm and less than 1,000 cpm, the following values will be used:

Locpm = 1,000 cpm TC_{locpm} = 1.25 min
Hicpm = 10,000 cpm TC_{Hicpm} = .2 min

2.3 10CFR50, Appendix I Compliance - Liquid Effluent Dose

Doses resulting from liquid effluents will be calculated at least monthly to show compliance with 10CFR50, Appendix I. A cumulative summation of whole body and organ doses for the current quarter and current year will be maintained. Additionally, doses due to liquid releases are projected monthly.

2.3.1 Dose Calculations

Radiation doses due to liquid radioactive effluents from PNPP are calculated based on three main dose pathways: potable water, aquatic foods (namely fresh water fish ingestion), and exposure to shoreline deposits. Irrigated food pathways, as discussed in Regulatory Guide 1.109, will not be of concern at PNPP as little or no water from Lake Erie is used for irrigation in the nearby Ohio counties of Lake, Ashtabula, Cuyahoga and Lorain. Nursery businesses and other agricultural activities that require supplemental water generally rely on water drawn from small ponds and streams.

Radiation dose to members of the public for liquid radioactive releases from PNPP will be calculated for the potable water, aquatic food, and shoreline deposit pathways using the following equations:

Potable Water

$$R_{ajp} = 1100 \frac{U_{ap}}{(M_p)(F)} \sum (Q_i)(D_{aipj}) \exp(-\lambda_i t_p) \qquad (2.3\text{-}1)$$

Aquatic Foods

$$R_{ajp} = 1100 \frac{U_{ap}}{(M_p)(F)} \sum (Q_i)(B_{ip})(D_{aipj}) \exp(-\lambda_i t_p) \qquad (2.3\text{-}2)$$

Shoreline Deposits

$$R_{ajp} = 110{,}000 \frac{(U_{ap})(W)}{(M_p)(F)} \sum (Q_i)(T_i)(D_{aipj}) \left[\exp(-\lambda_i t_p)\right]\left[1 - \exp(-\lambda_i t_b)\right] \qquad (2.3\text{-}3)$$

Where:

R_{ajp} = the dose to individuals of age group "a" to organ "j" from all the radionuclides in pathway "p", in mrem;

B_{ip} = the equilibrium bioaccumulation factor for radionuclide "i" in pathway "p", expressed as the ratio of the concentration in biota (pCi/kg) to the radionuclide concentration in water (pCi/l), from Table 2.3-4, l/kg;

D_{aipj} = the dose factor, specific to a given age group "a", radionuclide "i", pathway "p", and organ "j", which can be used to calculate the radiation dose from an intake of a radionuclide (mrem/pCi); or from exposure to a given concentration of a radionuclide in sediment, expressed as a ratio of the dose rate (mrem/h), and the areal radionuclide concentration, (pCi/m^2), from Tables 2.3-5 through 2.3-9;

F = the flow rate of the liquid effluent, ft^3/sec;

NOTE: The normal minimum dilution flow will be 30,000 gpm (USAR 11.2.3.2).

M_p = the dilution factor at the midpoint of exposure (or the point of withdrawal of drinking water, point of harvest of aquatic food or shoreline), from Table 2.3-10, dimensionless;

Q_i = the release of radionuclide "i", Ci;

T_b = the period of time for which the sediment or soil is exposed to the contaminated water, 1.75×10^5 hr (20 yrs);

T_i = the half-life of radionuclide "i", days;

t_p = the average transit time required for radionuclides to reach the point of exposure, from Table 2.3-11; for internal dose, t_p is the total time elapsed between release of the radionuclides and the ingestion of food or water, hr;

U_{ap} = the usage factor that specifies the exposure time or intake rate for an individual of age group a associated with pathway "p", from Table 2.3-12, hr/yr, 1/yr, or kg/yr;

W = the shoreline width factor, 0.3 (from Regulatory Guide 1.109);

λ_i = radioactive decay constant of radionuclide "i", h^{-1};

1100 = a factor to convert from (Ci/yr)/(ft^3/s) to pCi/l;

110,000 = a factor to convert from (Ci/yr)/(ft^3/s) to pCi/l and to account for the proportionality constant used in the sediment radioactivity model.

2.3.2 Cumulation of Doses

The dose contribution from liquid effluents will be calculated at least monthly. Calculations will be performed to determine the maximum whole body as well as the maximum organ dose to an individual. These dose calculations will be summed for comparison with quarterly and annual limits. These results will be summed with the doses cumulated from the other months in the quarter of interest and in the year of interest. To assure compliance with the dose limits of 10CFR50, Appendix I the following relationships shall hold:

for the quarter:

Dose $\leq$ 1.5 mrems whole body;

Dose $\leq$ 5 mrems any organ;

for the year:

Dose ≤ 3 mrems whole body;

Dose ≤ 10 mrems any organ.

The quarterly limits given above represent one-half of the annual design objective. If these quarterly or annual limits are exceeded, a special report will be submitted to the NRC, in accordance with ODCM Appendix C controls, stating the reason and corrective action to be taken.

2.3.3 Projection of Doses

Anticipated doses resulting from the release of liquid effluents will be projected monthly. The doses calculated for the present month will be used as the projected doses unless information exists indicating that actual releases could differ significantly in the next month.

If the projected dose, when averaged over 31 days, exceeds 0.06 mrem to the whole body or 0.2 mrem to any organ, the liquid radwaste system will be used to process waste. The values for the projected dose impact levels correspond to approximately one forty-eighth of the 10CFR50, Appendix I design objective. If continued at this rate for one year, the projected impact would correspond to less than one-fourth of the 10CFR50, Appendix I limit. The projected doses will be calculated using equations 2.3-1, 2.3-2, and 2.3-3.

In this case, the source term will be adjusted to reflect this information and the justification for the adjustment noted. This adjustment should account for any radwaste equipment which was operated during the previous month that could be out of service in the coming month.

2.3.4 Population Dose

PNPP's Annual Radioactive Effluent Release Reports, as required by Regulatory Guide 1.21, will include total population dose and average individual doses calculated for radioactive effluent releases. The total population dose and average individual doses will be calculated using average individual transit times and usage factors, Table 2.3-12, (as compared to maximum exposed individual factors used for individual doses). The total population dose will be calculated by dose pathway and organ, with pathway doses being corrected for the fraction of the population assumed to be in each age group (adult, teen, child and infant: 0.71, 0.11, 0.18, 0.0 respectively).

Table 2.3-1

Organs Used for Liquid Effluent Dose Calculations

1. Bone
2. GI Tract
3. Kidney
4. Liver
5. Lung
6. Thyroid
7. Whole Body
8. Skin

Table 2.3-2

Age Groups Used for Liquid Effluent Dose Calculations

1. Adult (17 yrs. and older)
2. Teen (11 - 17 yrs)
3. Child (1 - 11 yrs)
4. Infant (0 - 1 yr)

Table 2.3-3

Liquid Effluent Dose Pathways

1. Water Ingestion
2. Shore Exposure
3. Fresh Water Fish Ingestion

Table 2.3-4

Bio-Accumulation Factors (B_{ip}) (pCi/kg per pCi/liter)

Element	Fish
H	9.0E-01
C	4.6E+03
Na	1.0E+02
P	1.0E+05
Cr	2.0E+02
Mn	4.0E+02
Fe	1.0E+02
Co	5.0E+01
Ni	1.0E+02
Cu	5.0E+01
Zn	2.0E+03
Br	4.2E+02
Rb	2.0E+03
Sr	3.0E+01
Y	2.5E+01
Zr	3.3E+00
Nb	3.0E+04
Mo	1.0E+01
Tc	1.5E+01
Ru	1.0E+01
Rh	1.0E+01
Sb	1.0E+00
Te	4.0E+02
I	1.5E+01
Cs	2.0E+03
Ba	4.0E+00
La	2.5E+01
Ce	1.0E+00
Pr	2.5E+01
Nd	2.5E+01
Ta	1.0E+00
W	1.2E+03
Re	1.0E+00
Au	1.0E+00
Np	1.0E+01

Table 2.3-5

Ingestion Dose Factors for Adult (mrem/pCi ingested)

ISOTOPE	BONE	LIVER	WHOLE BODY	THYROID	KIDNEY	LUNG	GI-LLI
H3	0.00E+00	1.05E-07	1.05E-07	1.05E-07	1.05E-07	1.05E-07	1.05E-07
C14	2.84E-06	5.68E-07	5.68E-07	5.68E-07	5.68E-07	5.68E-07	5.68E-07
NA24	1.70E-06	1.70E-06	1.70E-06	1.70E-06	1.70E-06	1.70E-06	1.70E-06
P32	1.93E-04	1.20E-05	7.46E-06	0.00E+00	0.00E+00	0.00E+00	2.17E-05
CR51	0.00E+00	0.00E+00	2.66E-09	1.59E-09	5.86E-10	3.53E-09	6.69E-07
MN54	0.00E+00	4.57E-06	8.72E-07	0.00E+00	1.36E-06	0.00E+00	1.40E-05
MN56	0.00E+00	1.15E-07	2.04E-08	0.00E+00	1.46E-07	0.00E+00	3.67E-06
FE55	2.75E-06	1.90E-06	4.43E-07	0.00E+00	0.00E+00	1.06E-06	1.09E-06
FE59	4.34E-06	1.02E-05	3.91E-06	0.00E+00	0.00E+00	2.85E-06	3.40E-05
CO58	0.00E+00	7.45E-07	1.67E-06	0.00E+00	0.00E+00	0.00E+00	1.51E-05
CO60	0.00E+00	2.14E-06	4.72E-06	0.00E+00	0.00E+00	0.00E+00	4.02E-05
NI63	1.30E-04	9.01E-06	4.36E-06	0.00E+00	0.00E+00	0.00E+00	1.88E-06
NI65	5.28E-07	6.86E-08	3.13E-08	0.00E+00	0.00E+00	0.00E+00	1.74E-06
CU64	0.00E+00	8.33E-08	3.91E-08	0.00E+00	2.10E-07	0.00E+00	7.10E-06
CU67	2.95E-07	8.41E-07	0.00E+00	2.24E-07	2.62E-07	2.27E-07	1.07E-05
ZN65	4.84E-06	1.54E-05	6.96E-06	0.00E+00	1.03E-05	0.00E+00	9.70E-06
ZN69	1.03E-08	1.97E-08	1.37E-09	0.00E+00	1.28E-08	0.00E+00	2.96E-09
BR83	0.00E+00	0.00E+00	4.02E-08	0.00E+00	0.00E+00	0.00E+00	5.79E-08
BR84	0.00E+00	0.00E+00	5.21E-08	0.00E+00	0.00E+00	0.00E+00	4.09E-13
BR85	0.00E+00	0.00E+00	2.14E-09	0.00E+00	0.00E+00	0.00E+00	0.00E+00
RB86	0.00E+00	2.11E-05	9.83E-06	0.00E+00	0.00E+00	0.00E+00	4.16E-06
RB88	0.00E+00	6.05E-08	3.21E-08	0.00E+00	0.00E+00	0.00E+00	8.36E-19
RB89	0.00E+00	4.01E-08	2.82E-08	0.00E+00	0.00E+00	0.00E+00	2.33E-21
SR87M	1.52E-08	1.77E-08	0.00E+00	2.96E-09	2.58E-08	6.92E-09	2.15E-07
SR89	3.08E-04	0.00E+00	8.84E-06	0.00E+00	0.00E+00	0.00E+00	4.94E-05
SR90	7.58E-03	0.00E+00	1.86E-03	0.00E+00	0.00E+00	0.00E+00	2.19E-04
SR91	5.67E-06	0.00E+00	2.29E-07	0.00E+00	0.00E+00	0.00E+00	2.70E-05
SR92	2.15E-06	0.00E+00	9.30E-08	0.00E+00	0.00E+00	0.00E+00	4.26E-05
Y90	9.62E-09	0.00E+00	2.58E-10	0.00E+00	0.00E+00	0.00E+00	1.02E-04
Y91M	9.09E-11	0.00E+00	3.52E-12	0.00E+00	0.00E+00	0.00E+00	2.67E-10
Y91	1.41E-07	0.00E+00	3.77E-09	0.00E+00	0.00E+00	0.00E+00	7.67E-05
Y92	8.45E-10	0.00E+00	2.47E-11	0.00E+00	0.00E+00	0.00E+00	1.48E-05
Y93	2.68E-09	0.00E+00	7.40E-11	0.00E+00	0.00E+00	0.00E+00	8.50E-05
ZR95	3.04E-08	9.75E-09	6.60E-09	0.00E+00	1.53E-08	0.00E+00	3.09E-05
ZR97	1.68E-09	3.39E-10	1.55E-10	0.00E+00	5.12E-10	0.00E+00	1.05E-04
NB95	6.22E-09	3.46E-09	1.86E-09	0.00E+00	3.42E-09	0.00E+00	2.10E-05
MO99	0.00E+00	4.31E-06	8.20E-07	0.00E+00	9.76E-06	0.00E+00	9.99E-06
TC99M	2.47E-10	6.98E-10	8.89E-09	0.00E+00	1.06E-08	3.42E-10	4.13E-07

Table 2.3-5 (Cont.)

Ingestion Dose Factors for Adult (mrem/pCi ingested)

ISOTOPE	BONE	LIVER	WHOLE BODY	THYROID	KIDNEY	LUNG	GI-LLI
TC101	2.54E-10	3.66E-10	3.59E-09	0.00E+00	6.59E-09	1.87E-10	1.10E-21
RU103	1.85E-07	0.00E+00	7.97E-08	0.00E+00	7.06E-07	0.00E+00	2.16E-05
RU105	1.54E-08	0.00E+00	6.08E-09	0.00E+00	1.99E-07	0.00E+00	9.42E-06
RU106	2.75E-06	0.00E+00	3.48E-07	0.00E+00	5.31E-06	0.00E+00	1.78E-04
AG110M	1.60E-07	1.48E-07	8.79E-08	0.00E+00	2.91E-07	0.00E+00	6.04E-05
TE125M	2.68E-06	9.17E-07	3.59E-07	8.06E-07	1.09E-05	0.00E+00	1.07E-05
TE127M	6.77E-06	2.42E-06	8.25E-07	1.73E-06	2.75E-05	0.00E+00	2.27E-05
TE127	1.10E-07	3.95E-08	2.38E-08	8.15E-08	4.48E-07	0.00E+00	8.68E-06
TE129M	1.15E-05	4.29E-06	1.82E-06	3.95E-06	4.80E-05	0.00E+00	5.79E-05
TE129	3.14E-08	1.18E-08	7.65E-09	2.41E-08	1.32E-07	0.00E+00	2.37E-08
TE131M	1.73E-06	8.46E-07	7.05E-07	1.34E-06	8.57E-06	0.00E+00	8.40E-05
TE131	1.97E-08	8.23E-09	6.22E-09	1.62E-08	8.63E-08	0.00E+00	2.79E-09
TE132	2.52E-06	1.63E-06	1.53E-06	1.80E-06	1.57E-05	0.00E+00	7.71E-05
I130	7.56E-07	2.23E-06	8.80E-07	1.89E-04	3.48E-06	0.00E+00	1.92E-06
I131	4.16E-06	5.95E-06	3.41E-06	1.95E-03	1.02E-05	0.00E+00	1.57E-06
I132	2.03E-07	5.43E-07	1.90E-07	1.90E-05	8.65E-07	0.00E+00	1.02E-07
I133	1.42E-06	2.47E-06	7.53E-07	3.63E-04	4.31E-06	0.00E+00	2.22E-06
I134	1.06E-07	2.88E-07	1.03E-07	4.99E-06	4.58E-07	0.00E+00	2.51E-10
I135	4.43E-07	1.16E-06	4.28E-07	7.65E-05	1.86E-06	0.00E+00	1.31E-06
CS134	6.22E-05	1.48E-04	1.21E-04	0.00E+00	4.79E-05	1.59E-05	2.59E-06
CS136	6.51E-06	2.57E-05	1.85E-05	0.00E+00	1.43E-05	1.96E-06	2.92E-06
CS137	7.97E-05	1.09E-04	7.14E-05	0.00E+00	3.70E-05	1.23E-05	2.11E-06
CS138	5.52E-08	1.09E-07	5.40E-08	0.00E+00	8.01E-08	7.91E-09	4.65E-13
BA139	9.70E-08	6.91E-11	2.84E-09	0.00E+00	6.46E-11	3.92E-11	1.72E-07
BA140	2.03E-05	2.55E-08	1.33E-06	0.00E+00	8.67E-09	1.46E-08	4.18E-05
BA141	4.71E-08	3.56E-11	1.59E-09	0.00E+00	3.31E-11	2.02E-11	2.22E-17
BA142	2.13E-08	2.19E-11	1.34E-09	0.00E+00	1.85E-11	1.24E-11	3.00E-26
LA140	2.50E-09	1.26E-09	3.33E-10	0.00E+00	0.00E+00	0.00E+00	9.25E-05
LA142	1.28E-10	5.82E-11	1.45E-11	0.00E+00	0.00E+00	0.00E+00	4.25E-07
CE141	9.36E-09	6.33E-09	7.18E-10	0.00E+00	2.94E-09	0.00E+00	2.42E-05
CE143	1.65E-09	1.22E-06	1.35E-10	0.00E+00	5.37E-10	0.00E+00	4.56E-05
CE144	4.88E-07	2.04E-07	2.62E-08	0.00E+00	1.21E-07	0.00E+00	1.65E-04
PR143	9.20E-09	3.69E-09	4.56E-10	0.00E+00	2.13E-09	0.00E+00	4.03E-05
PR144	3.01E-11	1.25E-11	1.53E-12	0.00E+00	7.05E-12	0.00E+00	4.33E-18
ND147	6.29E-09	7.27E-09	4.35E-10	0.00E+00	4.25E-09	0.00E+00	3.49E-05
TA183	4.77E-11	2.92E-10	2.39E-11	0.00E+00	1.66E-10	0.00E+00	1.76E-04
W187	1.03E-07	8.61E-08	3.01E-08	0.00E+00	0.00E+00	0.00E+00	2.82E-05
RE188	2.42E-07	1.90E-07	5.37E-07	1.26E-05	0.00E+00	0.00E+00	1.56E-05
AU198	0.00E+00	1.12E-08	1.90E-08	0.00E+00	3.42E-08	0.00E+00	8.67E-06
AU199	0.00E+00	7.00E-08	5.89E-08	0.00E+00	2.74E-07	0.00E+00	1.13E-05
NP239	1.19E-09	1.17E-10	6.45E-11	0.00E+00	3.65E-10	0.00E+00	2.40E-05
SB124	2.80E-06	5.29E-08	1.11E-06	6.79E-09	0.00E+00	2.18E-06	7.95E-05
SB125	1.79E-06	2.00E-08	4.26E-07	1.82E-09	0.00E+00	1.38E-06	1.97E-05

Table 2.3-6

Ingestion Dose Factors for Teenager (mrem/pCi ingested)

ISOTOPE	BONE	LIVER	WHOLE BODY	THYROID	KIDNEY	LUNG	GI-LLI
H3	0.00E+00	1.06E-07	1.06E-07	1.06E-07	1.06E-07	1.06E-07	1.06E-07
C14	4.06E-06	8.12E-07	8.12E-07	8.12E-07	8.12E-07	8.12E-07	8.12E-07
NA24	2.30E-06	2.30E-06	2.30E-06	2.30E-06	2.30E-06	2.30E-06	2.30E-06
P32	2.76E-04	1.71E-05	1.07E-05	0.00E+00	0.00E+00	0.00E+00	2.32E-05
CR51	0.00E+00	0.00E+00	3.60E-09	2.00E-09	7.89E-10	5.14E-09	6.05E-07
MN54	0.00E+00	5.90E-06	1.17E-06	0.00E+00	1.76E-06	0.00E+00	1.21E-05
MN56	0.00E+00	1.58E-07	2.81E-08	0.00E+00	2.00E-07	0.00E+00	1.04E-05
FE55	3.78E-06	2.68E-06	6.25E-07	0.00E+00	0.00E+00	1.70E-06	1.16E-06
FE59	5.87E-06	1.37E-05	5.29E-06	0.00E+00	0.00E+00	4.32E-06	3.24E-05
CO58	0.00E+00	9.72E-07	2.24E-06	0.00E+00	0.00E+00	0.00E+00	1.34E-05
CO60	0.00E+00	2.81E-06	6.33E-06	0.00E+00	0.00E+00	0.00E+00	3.66E-05
NI63	1.77E-04	1.25E-05	6.00E-06	0.00E+00	0.00E+00	0.00E+00	1.99E-06
NI65	7.49E-07	9.57E-08	4.36E-08	0.00E+00	0.00E+00	0.00E+00	5.19E-06
CU67	3.54E-07	1.07E-06	0.00E+00	2.74E-07	3.19E-7	2.81E-07	1.32E-05
CU64	0.00E+00	1.15E-07	5.41E-08	0.00E+00	2.91E-07	0.00E+00	8.92E-06
ZN65	5.76E-06	2.00E-05	9.33E-06	0.00E+00	1.28E-05	0.00E+00	8.47E-06
ZN69	1.47E-08	2.80E-08	1.96E-09	0.00E+00	1.83E-08	0.00E+00	5.16E-08
BR83	0.00E+00	0.00E+00	5.74E-08	0.00E+00	0.00E+00	0.00E+00	0.00E+00
BR84	0.00E+00	0.00E+00	7.22E-08	0.00E+00	0.00E+00	0.00E+00	0.00E+00
BR85	0.00E+00	0.00E+00	3.05E-09	0.00E+00	0.00E+00	0.00E+00	0.00E+00
RB86	0.00E+00	2.98E-05	1.40E-05	0.00E+00	0.00E+00	0.00E+00	4.41E-06
RB88	0.00E+00	8.52E-08	4.54E-08	0.00E+00	0.00E+00	0.00E+00	7.30E-15
RB89	0.00E+00	5.50E-08	3.89E-08	0.00E+00	0.00E+00	0.00E+00	8.43E-17
SR87M	2.81E-8	2.18E-08	0.00E+00	4.40E-9	3.00E-08	9.91E-09	2.42E-07
SR89	4.40E-04	0.00E+00	1.26E-05	0.00E+00	0.00E+00	0.00E+00	5.24E-05
SR90	8.30E-03	0.00E+00	2.05E-03	0.00E+00	0.00E+00	0.00E+00	2.33E-04
SR91	8.07E-06	0.00E+00	3.21E-07	0.00E+00	0.00E+00	0.00E+00	3.66E-05
SR92	3.05E-06	0.00E+00	1.30E-07	0.00E+00	0.00E+00	0.00E+00	7.77E-05
Y90	1.37E-08	0.00E+00	3.69E-10	0.00E+00	0.00E+00	0.00E+00	1.13E-04
Y91M	1.29E-10	0.00E+00	4.93E-12	0.00E+00	0.00E+00	0.00E+00	6.09E-09
Y91	2.01E-07	0.00E+00	5.39E-09	0.00E+00	0.00E+00	0.00E+00	8.24E-05
Y92	1.21E-09	0.00E+00	3.50E-11	0.00E+00	0.00E+00	0.00E+00	3.32E-05
Y93	3.83E-09	0.00E+00	1.05E-10	0.00E+00	0.00E+00	0.00E+00	1.17E-04
ZR95	4.12E-08	1.30E-08	8.94E-09	0.00E+00	1.91E-08	0.00E+00	3.00E-05
ZR97	2.37E-09	4.69E-10	2.16E-10	0.00E+00	7.11E-10	0.00E+00	1.27E-04
NB95	8.22E-09	4.56E-09	2.51E-09	0.00E+00	4.42E-09	0.00E+00	1.95E-05
MO99	0.00E+00	6.03E-06	1.15E-06	0.00E+00	1.38E-05	0.00E+00	1.08E-05
TC99M	3.32E-10	9.26E-10	1.20E-08	0.00E+00	1.38E-08	5.14E-10	6.08E-07

Table 2.3-6 (Cont.)

Ingestion Dose Factors for Teenager (mrem/pCi ingested)

ISOTOPE	BONE	LIVER	WHOLE BODY	THYROID	KIDNEY	LUNG	GI-LLI
TC101	3.60E-10	5.12E-10	5.03E-09	0.00E+00	9.26E-09	3.12E-10	8.75E-17
RU103	2.55E-07	0.00E+00	1.09E-07	0.00E+00	8.99E-07	0.00E+00	2.13E-05
RU105	2.18E-08	0.00E+00	8.46E-09	0.00E+00	2.75E-07	0.00E+00	1.76E-05
RU106	3.92E-06	0.00E+00	4.94E-07	0.00E+00	7.56E-06	0.00E+00	1.88E-04
AG110M	2.05E-07	1.94E-07	1.18E-07	0.00E+00	3.70E-07	0.00E+00	5.45E-05
TE125M	3.83E-06	1.38E-06	5.12E-07	1.07E-06	0.00E+00	0.00E+00	1.13E-05
TE127M	9.67E-06	3.43E-06	1.15E-06	2.30E-06	3.92E-05	0.00E+00	2.41E-05
TE127	1.58E-07	5.60E-08	3.40E-08	1.09E-07	6.40E-07	0.00E+00	1.22E-05
TE129M	1.63E-05	6.05E-06	2.58E-06	5.26E-06	6.82E-05	0.00E+00	6.12E-05
TE129	4.48E-08	1.67E-08	1.09E-08	3.20E-08	1.88E-07	0.00E+00	2.45E-07
TE131M	2.44E-06	1.17E-06	9.76E-07	1.76E-06	1.22E-05	0.00E+00	9.39E-05
TE131	2.79E-08	1.15E-08	8.72E-09	2.15E-08	1.22E-07	0.00E+00	2.29E-09
TE132	3.49E-06	2.21E-06	2.08E-06	2.33E-06	2.12E-05	0.00E+00	7.00E-05
I130	1.03E-06	2.98E-06	1.19E-06	2.43E-04	4.59E-06	0.00E+00	2.29E-06
I131	5.85E-06	8.19E-06	4.40E-06	2.39E-03	1.41E-05	0.00E+00	1.62E-06
I132	2.79E-07	7.30E-07	2.62E-07	2.46E-05	1.15E-06	0.00E+00	3.18E-07
I133	2.01E-06	3.41E-06	1.04E-06	4.76E-04	5.98E-06	0.00E+00	2.58E-06
I134	1.46E-07	3.87E-07	1.39E-07	6.45E-06	6.10E-07	0.00E+00	5.10E-09
I135	6.10E-07	1.57E-06	5.82E-07	1.01E-04	2.48E-06	0.00E+00	1.74E-06
CS134	8.37E-05	1.97E-04	9.14E-05	0.00E+00	6.26E-05	2.39E-05	2.45E-06
CS136	8.59E-06	3.38E-05	2.27E-05	0.00E+00	1.84E-05	2.90E-06	2.72E-06
CS137	1.12E-04	1.49E-04	5.19E-05	0.00E+00	5.07E-05	1.97E-05	2.12E-06
CS138	7.76E-08	1.49E-07	7.45E-08	0.00E+00	1.10E-07	1.28E-08	6.76E-11
BA139	1.39E-07	9.78E-11	4.05E-09	0.00E+00	9.22E-11	6.74E-11	1.24E-06
BA140	2.84E-05	3.48E-08	1.83E-06	0.00E+00	1.18E-08	2.34E-08	4.38E-05
BA141	6.71E-08	5.01E-11	2.24E-09	0.00E+00	4.65E-11	3.43E-11	1.43E-13
BA142	2.99E-08	2.99E-11	1.84E-09	0.00E+00	2.53E-11	1.99E-11	9.18E-20
LA140	3.48E-09	1.71E-09	4.55E-10	0.00E+00	0.00E+00	0.00E+00	9.82E-05
LA142	1.79E-10	7.95E-11	1.98E-11	0.00E+00	0.00E+00	0.00E+00	2.42E-06
CE141	1.33E-08	8.88E-09	1.02E-09	0.00E+00	4.18E-09	0.00E+00	2.54E-05
CE143	2.35E-09	1.71E-06	1.91E-10	0.00E+00	7.67E-10	0.00E+00	5.14E-05
CE144	6.96E-07	2.88E-07	3.74E-08	0.00E+00	1.72E-07	0.00E+00	1.75E-04
PR143	1.31E-08	5.23E-09	6.52E-10	0.00E+00	3.04E-09	0.00E+00	4.31E-05
PR144	4.30E-11	1.76E-11	2.18E-12	0.00E+00	1.01E-11	0.00E+00	4.74E-14
ND147	9.38E-09	1.02E-08	6.11E-10	0.00E+00	5.99E-09	0.00E+00	3.68E-05
TA183	6.81E-11	4.15E-10	3.42E-11	0.00E+00	2.37E-10	0.00E+00	1.86E-04
W187	1.46E-07	1.19E-07	4.17E-08	0.00E+00	0.00E+00	0.00E+00	3.22E-05
RE188	3.45E-07	2.70E-07	7.66E-07	1.68E-05	0.00E+00	0.00E+00	2.33E-05
AU198	0.00E+00	1.60E-08	2.72E-08	0.00E+00	4.88E-08	0.00E+00	9.84E-06
AU199	0.00E+00	9.92E-08	8.41E-08	0.00E+00	3.92E-07	0.00E+00	1.17E-05
NP239	1.76E-09	1.66E-10	9.22E-11	0.00E+00	5.21E-10	0.00E+00	2.67E-05
SB124	3.87E-06	7.13E-08	1.51E-06	8.78E-09	0.00E+00	3.38E-06	7.80E-05
SB125	2.48E-06	2.71E-08	5.80E-07	2.37E-09	0.00E+00	2.18E-06	1.93E-05

Table 2.3-7

Ingestion Dose Factors for Child (mrem/pCi ingested)

ISOTOPE	BONE	LIVER	WHOLE BODY	THYROID	KIDNEY	LUNG	GI-LLI
H3	0.00E+00	2.03E-07	2.03E-07	2.03E-07	2.03E-07	2.03E-07	2.03E-07
C14	1.21E-05	2.42E-06	2.42E-06	2.42E-06	2.42E-06	2.42E-06	2.42E-06
NA24	5.80E-06	5.80E-06	5.80E-06	5.80E-06	5.80E-06	5.80E-06	5.80E-06
P32	8.25E-04	3.86E-05	3.18E-05	0.00E+00	0.00E+00	0.00E+00	2.28E-05
CR51	0.00E+00	0.00E+00	8.90E-09	4.94E-09	1.35E-09	9.02E-09	4.72E-07
MN54	0.00E+00	1.07E-05	2.85E-06	0.00E+00	3.00E-06	0.00E+00	8.98E-06
MN56	0.00E+00	3.34E-07	7.54E-08	0.00E+00	4.04E-07	0.00E+00	4.84E-05
FE55	1.15E-05	6.10E-06	1.89E-06	0.00E+00	0.00E+00	3.45E-06	1.13E-06
FE59	1.65E-05	2.67E-05	1.33E-05	0.00E+00	0.00E+00	7.74E-06	2.78E-05
CO58	0.00E+00	1.80E-06	5.51E-06	0.00E+00	0.00E+00	0.00E+00	1.05E-05
CO60	0.00E+00	5.29E-06	1.56E-05	0.00E+00	0.00E+00	0.00E+00	2.93E-05
NI63	5.38E-04	2.88E-05	1.83E-05	0.00E+00	0.00E+00	0.00E+00	1.94E-06
NI65	2.22E-06	2.09E-07	1.22E-07	0.00E+00	0.00E+00	0.00E+00	2.56E-05
CU67	9.21E-07	2.52E-06	0.00E+00	7.83E-07	8.74E-07	7.81E-07	3.89E-05
CU64	0.00E+00	2.45E-07	1.48E-07	0.00E+00	5.92E-07	0.00E+00	1.15E-05
ZN65	1.37E-05	3.65E-05	2.27E-05	0.00E+00	2.30E-05	0.00E+00	6.41E-06
ZN69	4.38E-08	6.33E-08	5.85E-09	0.00E+00	3.84E-08	0.00E+00	3.99E-06
BR83	0.00E+00	0.00E+00	1.71E-07	0.00E+00	0.00E+00	0.00E+00	0.00E+00
BR84	0.00E+00	0.00E+00	1.98E-07	0.00E+00	0.00E+00	0.00E+00	0.00E+00
BR85	0.00E+00	0.00E+00	9.12E-09	0.00E+00	0.00E+00	0.00E+00	0.00E+00
RB86	0.00E+00	6.70E-05	4.12E-05	0.00E+00	0.00E+00	0.00E+00	4.31E-06
RB88	0.00E+00	1.90E-07	1.32E-07	0.00E+00	0.00E+00	0.00E+00	9.32E-09
RB89	0.00E+00	1.17E-07	1.04E-07	0.00E+00	0.00E+00	0.00E+00	1.02E-09
SR87M	5.47E-08	6.78E-08	0.00E+00	1.34E-08	6.65E-08	2.57E-08	6.66E-07
SR89	1.32E-03	0.00E+00	3.77E-05	0.00E+00	0.00E+00	0.00E+00	5.11E-05
SR90	1.70E-02	0.00E+00	4.31E-03	0.00E+00	0.00E+00	0.00E+00	2.29E-04
SR91	2.40E-05	0.00E+00	9.06E-07	0.00E+00	0.00E+00	0.00E+00	5.30E-05
SR92	9.03E-06	0.00E+00	3.62E-07	0.00E+00	0.00E+00	0.00E+00	1.71E-04
Y90	4.11E-08	0.00E+00	1.10E-09	0.00E+00	0.00E+00	0.00E+00	1.17E-04
Y91M	3.82E-10	0.00E+00	1.39E-11	0.00E+00	0.00E+00	0.00E+00	7.48E-07
Y91	6.02E-07	0.00E+00	1.61E-08	0.00E+00	0.00E+00	0.00E+00	8.02E-05
Y92	3.60E-09	0.00E+00	1.03E-10	0.00E+00	0.00E+00	0.00E+00	1.04E-04
Y93	1.14E-08	0.00E+00	3.13E-10	0.00E+00	0.00E+00	0.00E+00	1.70E-04
ZR95	1.16E-07	2.55E-08	2.27E-08	0.00E+00	3.65E-08	0.00E+00	2.66E-05
ZR97	6.99E-09	1.01E-09	5.96E-10	0.00E+00	1.45E-09	0.00E+00	1.53E-04
NB95	2.25E-08	8.76E-09	6.26E-09	0.00E+00	8.23E-09	0.00E+00	1.62E-05
MO99	0.00E+00	1.33E-05	3.29E-06	0.00E+00	2.84E-05	0.00E+00	1.10E-05
TC99M	9.23E-10	1.81E-09	3.00E-08	0.00E+00	2.63E-08	9.19E-10	1.03E-06

Table 2.3-7 (Cont.)

Ingestion Dose Factors for Child (mrem/pCi ingested)

ISOTOPE	BONE	LIVER	WHOLE BODY	THYROID	KIDNEY	LUNG	GI-LLI
TC101	1.07E-09	1.12E-09	1.42E-08	0.00E+00	1.91E-08	5.92E-10	3.56E-09
RU103	7.31E-07	0.00E+00	2.81E-07	0.00E+00	1.84E-06	0.00E+00	1.89E-05
RU105	6.45E-08	0.00E+00	2.34E-08	0.00E+00	5.67E-07	0.00E+00	4.21E-05
RU106	1.17E-05	0.00E+00	1.46E-06	0.00E+00	1.58E-05	0.00E+00	1.82E-04
AG110M	5.39E-07	3.64E-07	2.91E-07	0.00E+00	6.78E-07	0.00E+00	4.33E-05
TE125M	1.14E-05	3.09E-06	1.52E-06	3.20E-06	0.00E+00	0.00E+00	1.10E-05
TE127M	2.89E-05	7.78E-06	3.43E-06	6.91E-06	8.24E-05	0.00E+00	2.34E-05
TE127	4.71E-07	1.27E-07	1.01E-07	3.26E-07	1.34E-06	0.00E+00	1.84E-05
TE129M	4.87E-05	1.36E-05	7.56E-06	1.57E-05	1.43E-04	0.00E+00	5.94E-05
TE129	1.34E-07	3.74E-08	3.18E-08	9.56E-08	3.92E-07	0.00E+00	8.34E-06
TE131M	7.20E-06	2.49E-06	2.65E-06	5.12E-06	2.41E-05	0.00E+00	1.01E-04
TE131	8.30E-08	2.53E-08	2.47E-08	6.35E-08	2.51E-07	0.00E+00	4.36E-07
TE132	1.01E-05	4.47E-06	5.40E-06	6.51E-06	4.15E-05	0.00E+00	4.50E-05
I130	2.92E-06	5.90E-06	3.04E-06	6.50E-04	8.82E-06	0.00E+00	2.76E-06
I131	1.72E-05	1.73E-05	9.83E-06	5.72E-03	2.84E-05	0.00E+00	1.54E-06
I132	8.00E-07	1.47E-06	6.76E-07	6.82E-05	2.25E-06	0.00E+00	1.73E-06
I133	5.92E-06	7.32E-06	2.77E-06	1.36E-03	1.22E-05	0.00E+00	2.95E-06
I134	4.19E-07	7.78E-07	3.58E-07	1.79E-05	1.19E-06	0.00E+00	5.16E-07
I135	1.75E-06	3.15E-06	1.49E-06	2.79E-04	4.83E-06	0.00E+00	2.40E-06
CS134	2.34E-04	3.84E-04	8.10E-05	0.00E+00	1.19E-04	4.27E-05	2.07E-06
CS136	2.35E-05	6.46E-05	4.18E-05	0.00E+00	3.44E-05	5.13E-06	2.27E-06
CS137	3.27E-04	3.13E-04	4.62E-05	0.00E+00	1.02E-04	3.67E-05	1.96E-06
CS138	2.28E-07	3.17E-07	2.01E-07	0.00E+00	2.23E-07	2.40E-08	1.46E-07
BA139	4.14E-07	2.21E-10	1.20E-08	0.00E+00	1.93E-10	1.30E-10	2.39E-05
BA140	8.31E-05	7.28E-08	4.85E-06	0.00E+00	2.37E-08	4.34E-08	4.21E-05
BA141	2.00E-07	1.12E-10	6.51E-09	0.00E+00	9.69E-11	6.58E-10	1.14E-07
BA142	8.74E-08	6.29E-11	4.88E-09	0.00E+00	5.09E-11	3.70E-11	1.14E-09
LA140	1.01E-08	3.53E-09	1.19E-09	0.00E+00	0.00E+00	0.00E+00	9.84E-05
LA142	5.24E-10	1.67E-10	5.23E-11	0.00E+00	0.00E+00	0.00E+00	3.31E-05
CE141	3.97E-08	1.98E-08	2.94E-09	0.00E+00	8.68E-09	0.00E+00	2.47E-05
CE143	6.99E-09	3.79E-06	5.49E-10	0.00E+00	1.59E-09	0.00E+00	5.55E-05
CE144	2.08E-06	6.52E-07	1.11E-07	0.00E+00	3.61E-07	0.00E+00	1.70E-04
PR143	3.93E-08	1.18E-08	1.95E-09	0.00E+00	6.39E-09	0.00E+00	4.24E-05
PR144	1.29E-10	3.99E-11	6.49E-12	0.00E+00	2.11E-11	0.00E+00	8.59E-08
ND147	2.79E-08	2.26E-08	1.75E-09	0.00E+00	1.24E-08	0.00E+00	3.58E-05
TA183	2.04E-10	9.40E-10	1.02E-10	0.00E+00	4.98E-10	0.00E+00	2.07E-04
W187	4.29E-07	2.54E-07	1.14E-07	0.00E+00	0.00E+00	0.00E+00	3.57E-05
RE188	1.03E-06	6.12E-07	2.29E-06	5.03E-05	0.00E+00	0.00E+00	4.12E-05
AU198	0.00E+00	3.61E-08	8.12E-08	0.00E+00	1.02E-07	0.00E+00	1.20E-05
AU199	0.00E+00	2.25E-07	2.51E-07	0.00E+00	8.23E-07	0.00E+00	1.27E-05
NP239	5.25E-09	3.77E-10	2.65E-10	0.00E+00	1.09E-09	0.00E+00	2.79E-05
SB124	1.11E-05	1.44E-07	3.89E-06	2.45E-08	0.00E+00	6.16E-06	6.94E-05
SB125	7.16E-06	5.52E-08	1.50E-06	6.63E-09	0.00E+00	3.99E-06	1.71E-05

Table 2.3-8

Ingestion Dose Factors for Infant (mrem/pCi ingested)

ISOTOPE	BONE	LIVER	WHOLE BODY	THYROID	KIDNEY	LUNG	GI-LLI
H3	0.00E+00	3.08E-07	3.08E-07	3.08E-07	3.08E-07	3.08E-07	3.08E-07
C14	2.37E-05	5.06E-06	5.06E-06	5.06E-06	5.06E-06	5.06E-06	5.06E-06
NA24	1.01E-05	1.01E-05	1.01E-05	1.01E-05	1.01E-05	1.01E-05	1.01E-05
P32	1.70E-03	1.00E-04	6.59E-05	0.00E+00	0.00E+00	0.00E+00	2.30E-05
CR51	0.00E+00	0.00E+00	1.41E-08	9.20E-09	2.01E-09	1.79E-08	4.11E-07
MN54	0.00E+00	1.99E-05	4.51E-06	0.00E+00	4.41E-06	0.00E+00	7.31E-06
MN56	0.00E+00	8.18E-07	1.41E-07	0.00E+00	7.03E-07	0.00E+00	7.43E-05
FE55	1.39E-05	8.98E-06	2.40E-06	0.00E+00	0.00E+00	4.39E-06	1.14E-06
FE59	3.08E-05	5.38E-05	2.12E-05	0.00E+00	0.00E+00	1.59E-05	2.57E-05
CO58	0.00E+00	3.60E-06	8.98E-06	0.00E+00	0.00E+00	0.00E+00	8.97E-06
CO60	0.00E+00	1.08E-05	2.55E-05	0.00E+00	0.00E+00	0.00E+00	2.57E-05
NI63	6.34E-04	3.92E-05	2.20E-05	0.00E+00	0.00E+00	0.00E+00	1.95E-06
NI65	4.70E-06	5.32E-07	2.42E-07	0.00E+00	0.00E+00	0.00E+00	4.05E-05
CU67	5.26E-06	1.42E-05	0.00E+00	4.93E-06	4.98E-06	4.87E-06	1.36E-05
CU64	0.00E+00	6.09E-07	2.82E-07	0.00E+00	1.03E-06	0.00E+00	1.25E-05
ZN65	1.84E-05	6.31E-05	2.91E-05	0.00E+00	3.06E-05	0.00E+00	5.33E-05
ZN69	9.33E-08	1.68E-07	1.25E-08	0.00E+00	6.98E-08	0.00E+00	1.37E-05
BR83	0.00E+00	0.00E+00	3.63E-07	0.00E+00	0.00E+00	0.00E+00	0.00E+00
BR84	0.00E+00	0.00E+00	3.82E-07	0.00E+00	0.00E+00	0.00E+00	0.00E+00
BR85	0.00E+00	0.00E+00	1.94E-08	0.00E+00	0.00E+00	0.00E+00	0.00E+00
RB86	0.00E+00	1.70E-04	8.40E-05	0.00E+00	0.00E+00	0.00E+00	4.35E-06
RB88	0.00E+00	4.98E-07	2.73E-07	0.00E+00	0.00E+00	0.00E+00	4.85E-07
RB89	0.00E+00	2.86E-07	1.97E-07	0.00E+00	0.00E+00	0.00E+00	9.74E-08
SR87M	2.22E-07	1.56E-07	0.00E+00	4.70E-08	1.37E-07	7.71E-08	1.49E-06
SR89	2.51E-03	0.00E+00	7.20E-05	0.00E+00	0.00E+00	0.00E+00	5.16E-05
SR90	1.85E-02	0.00E+00	4.71E-03	0.00E+00	0.00E+00	0.00E+00	2.31E-04
SR91	5.00E-05	0.00E+00	1.81E-06	0.00E+00	0.00E+00	0.00E+00	5.92E-05
SR92	1.92E-05	0.00E+00	7.13E-07	0.00E+00	0.00E+00	0.00E+00	2.07E-04
Y90	8.69E-08	0.00E+00	2.33E-09	0.00E+00	0.00E+00	0.00E+00	1.20E-04
Y91M	8.10E-10	0.00E+00	2.76E-11	0.00E+00	0.00E+00	0.00E+00	2.70E-06
Y91	1.13E-06	0.00E+00	3.01E-08	0.00E+00	0.00E+00	0.00E+00	8.10E-05
Y92	7.65E-09	0.00E+00	2.15E-10	0.00E+00	0.00E+00	0.00E+00	1.46E-04
Y93	2.43E-08	0.00E+00	6.62E-10	0.00E+00	0.00E+00	0.00E+00	1.92E-04
ZR95	2.06E-07	5.02E-08	3.56E-08	0.00E+00	5.41E-08	0.00E+00	2.50E-05
ZR97	1.48E-08	2.54E-09	1.16E-09	0.00E+00	2.56E-09	0.00E+00	1.62E-04
NB95	4.20E-08	1.73E-08	1.00E-08	0.00E+00	1.24E-08	0.00E+00	1.46E-05
MO99	0.00E+00	3.40E-05	6.63E-06	0.00E+00	5.08E-05	0.00E+00	1.12E-05
TC99M	1.92E-09	3.96E-09	5.10E-08	0.00E+00	4.26E-08	2.07E-09	1.15E-06

Table 2.3-8 (Cont.)

Ingestion Dose Factors for Infant (mrem/pCi ingested)

ISOTOPE	BONE	LIVER	WHOLE BODY	THYROID	KIDNEY	LUNG	GI-LLI
TC101	2.27E-09	2.86E-09	2.83E-08	0.00E+00	3.40E-08	1.56E-09	4.86E-07
RU103	1.48E-06	0.00E+00	4.95E-07	0.00E+00	3.08E-06	0.00E+00	1.80E-05
RU105	1.36E-07	0.00E+00	4.58E-08	0.00E+00	1.00E-06	0.00E+00	5.41E-05
RU106	2.41E-05	0.00E+00	3.01E-06	0.00E+00	2.85E-05	0.00E+00	1.83E-04
AG110M	9.96E-07	7.27E-07	4.81E-07	0.00E+00	1.04E-06	0.00E+00	3.77E-05
TE125M	2.33E-05	7.79E-06	3.15E-06	7.84E-06	0.00E+00	0.00E+00	1.11E-05
TE127M	5.85E-05	1.94E-05	7.08E-06	1.69E-05	1.44E-04	0.00E+00	2.36E-05
TE127	1.00E-06	3.35E-07	2.15E-07	8.14E-07	2.44E-06	0.00E+00	2.10E-05
TE129M	1.00E-04	3.43E-05	1.54E-05	3.84E-05	2.50E-04	0.00E+00	5.97E-05
TE129	2.84E-07	9.79E-08	6.63E-08	2.38E-07	7.07E-07	0.00E+00	2.27E-05
TE131M	1.52E-05	6.12E-06	5.05E-06	1.24E-05	4.21E-05	0.00E+00	1.03E-04
TE131	1.76E-07	6.50E-08	4.94E-08	1.57E-07	4.50E-07	0.00E+00	7.11E-06
TE132	2.08E-05	1.03E-05	9.61E-06	1.52E-05	6.44E-05	0.00E+00	3.81E-05
I130	6.00E-06	1.32E-05	5.30E-06	1.48E-03	1.45E-05	0.00E+00	2.83E-06
I131	3.59E-05	4.23E-05	1.86E-05	1.39E-02	4.94E-05	0.00E+00	1.51E-06
I132	1.66E-06	3.37E-06	1.20E-06	1.58E-04	3.76E-06	0.00E+00	2.73E-06
I133	1.25E-05	1.82E-05	5.33E-06	3.31E-03	2.14E-05	0.00E+00	3.08E-06
I134	8.69E-07	1.78E-06	6.33E-07	4.15E-05	1.99E-06	0.00E+00	1.84E-06
I135	3.64E-06	7.24E-06	2.64E-06	6.49E-04	8.07E-06	0.00E+00	2.62E-06
CS134	3.77E-04	7.03E-04	7.10E-05	0.00E+00	1.81E-04	7.42E-05	1.91E-06
CS136	4.59E-05	1.35E-04	5.04E-05	0.00E+00	5.38E-05	1.10E-05	2.05E-06
CS137	5.22E-04	6.11E-04	4.33E-05	0.00E+00	1.64E-04	6.64E-05	1.91E-06
CS138	4.81E-07	7.82E-07	3.79E-07	0.00E+00	3.90E-07	6.09E-08	1.25E-06
BA139	8.81E-07	5.84E-10	2.55E-08	0.00E+00	3.51E-10	3.54E-10	5.58E-05
BA140	1.71E-04	1.71E-07	8.81E-06	0.00E+00	4.06E-08	1.05E-07	4.20E-05
BA141	4.25E-07	2.91E-10	1.34E-08	0.00E+00	1.75E-10	1.77E-10	5.19E-06
BA142	1.84E-07	1.53E-10	9.06E-09	0.00E+00	8.81E-11	9.26E-11	7.59E-07
LA140	2.11E-08	8.32E-09	2.14E-09	0.00E+00	0.00E+00	0.00E+00	9.77E-05
LA142	1.10E-09	4.04E-10	9.67E-11	0.00E+00	0.00E+00	0.00E+00	6.86E-05
CE141	7.87E-08	4.80E-08	5.65E-09	0.00E+00	1.48E-08	0.00E+00	2.48E-05
CE143	1.48E-08	9.82E-06	1.12E-09	0.00E+00	2.86E-09	0.00E+00	5.73E-05
CE144	2.98E-06	1.22E-06	1.67E-07	0.00E+00	4.93E-07	0.00E+00	1.71E-04
PR143	8.13E-08	3.04E-08	4.03E-09	0.00E+00	1.13E-08	0.00E+00	4.29E-05
PR144	2.74E-10	1.06E-10	1.38E-11	0.00E+00	3.84E-11	0.00E+00	4.93E-06
ND147	5.53E-08	5.68E-08	3.48E-09	0.00E+00	2.19E-08	0.00E+00	3.60E-05
TA183	4.33E-10	2.49E-09	2.17E-10	0.00E+00	9.05E-10	0.00E+00	2.10E-04
W187	9.03E-07	6.28E-07	2.17E-07	0.00E+00	0.00E+00	0.00E+00	3.69E-05
RE188	2.20E-06	1.62E-06	4.86E-06	1.25E-04	0.00E+00	0.00E+00	4.72E-05
AU198	0.00E+00	9.56E-08	1.73E-07	0.00E+00	1.86E-07	0.00E+00	1.25E-05
AU199	0.00E+00	5.91E-07	5.32E-07	0.00E+00	1.49E-06	0.00E+00	1.28E-05
NP239	1.11E-08	9.93E-10	5.61E-10	0.00E+00	1.98E-09	0.00E+00	2.87E-05
SB124	2.14E-05	3.15E-07	6.63E-06	5.08E-08	0.00E+00	1.34E-05	6.60E-05
SB125	1.23E-05	1.19E-07	2.53E-06	1.54E-08	0.00E+00	7.72E-06	1.64E-05

Table 2.3-9

External Dose Factors for Standing on Contaminated Ground

(mrem/h per pCi/m^2)

Element	Whole Body	Skin
H-3	0.0	0.0
C-14	0.0	0.0
NA-24	2.50E-08	2.90E-08
P-32	0.0	0.0
Cr-51	2.20E-10	2.60E-10
Mn-54	5.80E-09	6.80E-09
Mn-56	1.10E-08	1.30E-08
Fe-55	0.0	0.0
Fe-59	8.00E-09	9.40E-09
Co-58	7.00E-09	8.20E-09
Co-60	1.70E-08	2.00E-08
Ni-63	0.0	0.0
Nr-65	3.70E-09	4.30E-09
Cu-64	1.50E-09	1.70E-09
Cu-67	1.40E-09	2.14E-9
Zn-65	4.00E-09	4.60E-09
Zn-69	0.0	0.0
Br-83	6.40E-11	9.30E-11
Br-84	1.20E-08	1.40E-08
Br-85	0.0	0.0
Rb-86	6.30E-10	7.20E-10
Rb-88	3.50E-09	4.00E-09
Rb-89	1.50E-08	1.80E-08
Sr-87M	4.05E-09	5.36E-09
Sr-89	5.60E-13	6.50E-13
Sr-91	7.10E-09	8.30E-09
Sr-92	9.00E-09	1.00E-08
Y-90	2.20E-12	2.60E-12
Y-91M	3.80E-09	4.40E-09
Y-91	2.40E-11	2.70E-11
Y-92	1.60E-09	1.90E-09
Y-93	5.70E-10	7.80E-10
Zr-95	5.00E-09	5.80E-09
Zr-97	5.50E-09	6.40E-09
Mo-95	5.10E-09	6.00E-09
Mo-99	1.90E-09	2.20E-09
Tc-99M	9.60E-10	1.10E-09
Tc-101	2.70E-09	3.00E-09
Ru-103	3.60E-09	4.20E-09
Ru-105	4.50E-09	5.10E-09
Ru-106	1.50E-09	1.80E-09

Table 2.3-9 (Cont.)

External Dose Factors for Standing on Contaminated Ground

(mrem/h per pCi/m^2)

Element	Whole Body	Skin
Ag-110M	1.80E-08	2.10E-08
Te-125M	3.50E-11	4.80E-11
Te-127M	1.10E-12	1.30E-12
Te-127	1.00E-11	1.10E-11
Te-129M	7.70E-10	9.00E-10
Te-129	7.10E-10	8.40E-10
Te-131M	8.40E-09	9.90E-09
Te-131	2.20E-09	2.60E-06
Te-132	1.70E-09	2.00E-09
Sb-124	2.28E-08	6.93E-08
Sb-125	5.67E-09	7.96E-09
I-130	1.40E-08	1.70E-08
I-131	2.80E-09	3.40E-09
I-132	1.70E-08	2.00E-08
I-133	3.70E-09	4.50E-09
I-134	1.60E-08	1.90E-08
I-135	1.20E-08	1.40E-08
Cs-134	1.20E-08	1.40E-08
Cs-136	1.50E-08	1.70E-08
Cs-137	4.20E-09	4.90E-09
Cs-138	2.10E-08	2.40E-08
Ba-139	2.40E-09	2.70E-09
Ba-140	2.10E-09	2.40E-09
Ba-141	4.30E-09	4.90E-09
Ba-142	7.90E-09	9.00E-09
La-140	1.50E-08	1.70E-08
La-142	1.50E-08	1.80E-08
Ce-141	5.50E-10	6.20E-10
Ce-143	2.20E-09	2.50E-09
Ce-144	3.20E-10	3.70E-10
Pr-143	0.0	0.0
Pr-144	2.00E-10	2.30E-10
Nd-147	1.00E-09	1.20E-09
Ta-183	3.76E-09	7.30E-09
W-187	3.10E-09	3.60E-09
Re-188	7.86E-10	1.18E-07
Au-198	5.33E-09	3.36E-08
Au-199	1.13E-9	1.39E-09
Np-239	9.50E-10	1.10E-09

Table 2.3-10

Liquid Effluent Dilution Factors (M_p)

Maximum Individual Dilution Factors

Pathway	Location	M_p
Potable Water Ingestion	3.9 mile WSW of site	32.2
Fresh Water Fish Ingestion	Near Discharge Structure	10.9
Shoreline Exposure	0.7 mile ENE of Site	14.5

Population Dose Dilution Factors*

Pathway	Location	M_p
Potable Water Ingestion	Population Weighted Average	314
Fresh Water Fish Ingestion	Catch Weighted Average	77.4
Shoreline Exposure	7.7 mile WSW of site	162

Table 2.3-11

Transit Times Required for Nuclides to Reach the Point of Exposure (t_p)

	Maximum Exposed Individual	Average Exposed Individual*
Eventual transit time for water ingestion	12 h	24 h
Eventual transit time for fish ingestion	24 h	168 h
Eventual transit time for shore exposure	0 h	0 h

* for total population and average individual dose calculations

Table 2.3-12

Usage Factors (U_{ap})

	Maximum Exposed Individual	Average Exposed Individual*
Water ingestion (L/yr) Adult	730	370
Water ingestion (L/yr) Teen	510	260
Water ingestion (L/yr) Child	510	260
Water ingestion (L/yr) Infant	330	--
Fresh water fish ingestion (kg/yr) Adult	21	6.9
Fresh water fish ingestion (kg/yr) Teen	16	5.2
Fresh water fish ingestion (kg/yr) Child	6.9	2.2
Fresh water fish ingestion (kg/yr) Infant	--	--
Shore exposure (h/yr) Adult	12	8.3
Shore exposure (h/yr) Teen	67	47
Shore exposure (h/yr) Child	14	9.5
Shore exposure (h/yr) Infant	--	--

* for total population and average individual dose calculations

Table 2.3-13

Dilution Factors for Each of the Potable Water Intakes within 50 Miles of PNPP

The total population dilution factor of 314 is population weighted using dilution factors for each of the potable water intakes within 50 miles of PNPP.

Intake	Dist. (Mi)	Dir	Population	Fraction of Population	Dilution Factor	Weighted Dilution Factor
Ohio American Water Serv. Co.	20	ENE	38,500	2.12E-2	187.7	3.98E+00
Conneaut	33	ENE	13,500	7.43E-03	238.2	1.77E+00
Avon Lake	50	WSW	99,500	5.48E-02	388.5	2.13E+01
Cleveland	35	SW	1,437,000	7.92E-01	326.7	2.59E+02
Fairport Harbor	7	WSW	3,200	1.76E-03	154.2	2.71E-01
Lake County East	3.5	WSW	10,258	5.65E-03	107.4	6.07E-01
Lake County West	15	WSW	85,000	4.68E-02	220.0	1.03E+01
Ohio Water Serv.	10	WSW	60,000	3.30E-02	181.9	6.00E+00
Painesville	7.5	WSW	27,000	1.49E-02	159.3	2.37E+00
Kent County Water Supply	50	NW	42,000	2.31E-2102	388.5	8.97E+00
TOTALS			1,815,958	1.00E+0	TOTAL DF	3.14E+02

Dist, Dir Population = distance, direction, and population values obtained from the 1989 Engineering Report "Lake Erie Potable Water Facilities and Intakes within 50 Miles of PNPP" (Ref. SO-11552 "E").

Fraction of Population = The ratio of the population receiving drinking water from that intake to the total population number for all drinking water intakes located within 50 miles of PNPP.

Dilution Factor = Values obtained from the Perry Environmental Report - Operating License Stage, Table 5.1-10 "Annual Average Dilution Factors for Lake Water Intakes within 50 Miles of PNPP" and Q&R Page 2.1-2. Lake County West dilution factor per interpolation. Kent County Water Supply dilution factor was estimated.

The Weighted Dilution Factor = (Fraction of Population) x (Dilution Factor), based on the population for each drinking water intake; the sum of which is to be used as the potable water total population dilution factor for radioactive liquid effluent releases from PNPP.

Table 2.3-14

Dilution Factors for the Fish Ingestion Pathway Individual Grid Locations

The total population dilution factor of 77.4 is catch distance and volume weighted using dilution factors at those locations. Fish harvest is based on Ohio Department of Natural Resources the total angler catch (1987 annual) values for Lake Erie within 50 mile of PNPP.

Grid	No. of Fish	Fraction of Fish	Distance (mi)	Dilution Factor	(Frac Fish)x (Dil Factor)
617	52823	3.91E-02	29	92	3.60E+00
618	76004	5.63E-02	36	100	5.63E+00
714	102522	7.59E-02	9	52	3.96E+00
715	10743	7.95E-03	9	52	4.13E-01
716	19817	1.47E-02	11	56	8.21E-01
717	73401	5.43E-02	24	83	4.51E+00
718	118676	8.78E-02	33	95	8.34E+00
809	0	0.00E+00	48	115	0.00E+00
810	3953	2.93E-03	39	105	3.07E-01
811	13648	1.01E-02	30	92	9.29E-01
812	33923	2.51E-02	22	78	1.96E+00
813	182663	1.35E-01	13	61	8.25E+00
814	164369	1.22E-01	4	34	4.14E+00
909	80753	5.98E-02	50	116	6.93E+00
910	43800	3.24E-02	42	110	3.57E+00
911	117430	8.69E-02	33	95	8.26E+00
912	256529	1.90E-01	24	83	1.58E+01
TOTAL	1351054	1.00E+00		TOTAL D.F.	7.74E+01

Grid No. and No. of Fish = Total angler catch (1987 annual) for each grid location; per letter from Michael R. Rawson, Fairport Fisheries Research Station, Ohio Department of Natural Resources to Richard Cochnar (6/20/88). Commercial harvest data were not used as they were differentiated by harbor location only, not by geographical grid location.

Fraction of Fish = The ratio of the fish caught in that grid to the total number of fish caught in all grids located within 50 miles of PNPP.

Distance = Distance to the center of that grid from PNPP, in miles.

Dilution Factor = Derived, for the appropriate distance (center of each grid), from annual average dilution factor data (non-adjusted), per Perry Environmental Report - Operating License Stage, Table 5.1-10 "Annual Average Dilution Factors for Lake Water Intakes within 50 Miles of PNPP."

(Fraction of Fish) x (Dilution Factor) = The weighted dilution factor, based on catch, for each grid; the sum of which is to be used as the fish ingestion total population dilution factor for radioactive liquid effluent releases from PNPP.

Table 2.3-15

Dilution Factors for the Shore Exposure Pathway

MAXIMUM EXPOSED INDIVIDUAL DILUTION FACTOR

The point of exposure assumed for this pathway is the shoreline at the PNPP site boundary 0.7 miles down shore from the plant discharge structure. Interpolation of the data presented in the Perry Environmental Report - Operating License Stage, Table 5.1-10, "Annual Average Dilution Factors for Lake Water Intakes within 50 Miles of PNPP" yields a maximum individual dose dilution factor of 14.5 (dilution factor unadjusted for current frequency).

TOTAL POPULATION DILUTION FACTOR

The total population dilution factor of 162 is that of the Headlands Beach State Park. 7.7 miles WSW of PNPP (interpolated, adjusted WSW dilution factor). This location was selected because of its lake site location and it has, by far, the highest attendance of any park located in vicinity of PNPP (Perry Environmental Report - Operating License State, Table 2.1-2 "Major Camps and Parks within 10 Miles of the PNPP").

3.0 GASEOUS EFFLUENTS

3.0.1 Batch Releases

A batch release is the discontinuous discharge of gaseous radioactive effluents of known radionuclide concentration(s) and flowrate taking place over a finite period of time, usually hours or days. A batch release to the environment may occur as a result of an effluent flowpath that bypasses treatment or monitoring. Since radioactive releases approaching 10CFR20 limits are not anticipated, an ODCM Control is not entered for batch releases. Every reasonable effort will be made to maintain the levels of radioactive material in the gaseous effluents ALARA.

The radioactive gaseous effluent release flowpath is monitored for principal gamma emitters (noble gases, particulates, and halogens) as if the inoperable radioactive effluent monitor requirements of Table 3.3.7.10-1 had been entered. This action ensures the dose to a member of the general public is within the limits of Controls 3.11.2.2 and 3.11.2.3. If radioactivity is detected, the radionuclide concentration(s) is added to the dose calculations for the appropriate radioactive gaseous effluent continuous release point. Administrative instructions are employed to establish minimum monitoring requirements for these batch releases to ensure compliance with all regulatory requirements. The administrative instructions shall also ensure that the specific activity that will cause a batch release has been reviewed for the requirements of 10 CFR 50.59.

3.0.2 Continuous Releases

There are four environmental release points for gaseous effluents used for Unit 1 operation of the Perry Nuclear Power Plant: Turbine Bldg/Heater Bay Vent, Off-Gas Vent, Unit 1 Vent, and Unit 2 Vent (see Figure 3.0-1). The Unit 1 and Unit 2 Vents are located on the top of the Intermediate Building, Elevation 753'9". The Turbine Bldg/Heater Bay Vent is located on the top of the Heater Bay Building, Elevation 722'0". The Off-Gas Vent is located on the top of the Off-Gas Building, Elevation 723'0". Site ground level elevation is 620'0". Radiological releases from each vent are monitored by a noble gas radiation monitor.

All gaseous effluent releases from PNPP via these vents will be continuous releases, and are considered to be long-term (i.e., greater than 500 hours per year) and ground level. Containment/drywell purges and vents will be considered periods of increased radiological release as they are vented through the Unit 1 Vent, concurrent with normal, continuous releases.

Figure 3.0-1

Gaseous Effluent System Flow Diagram

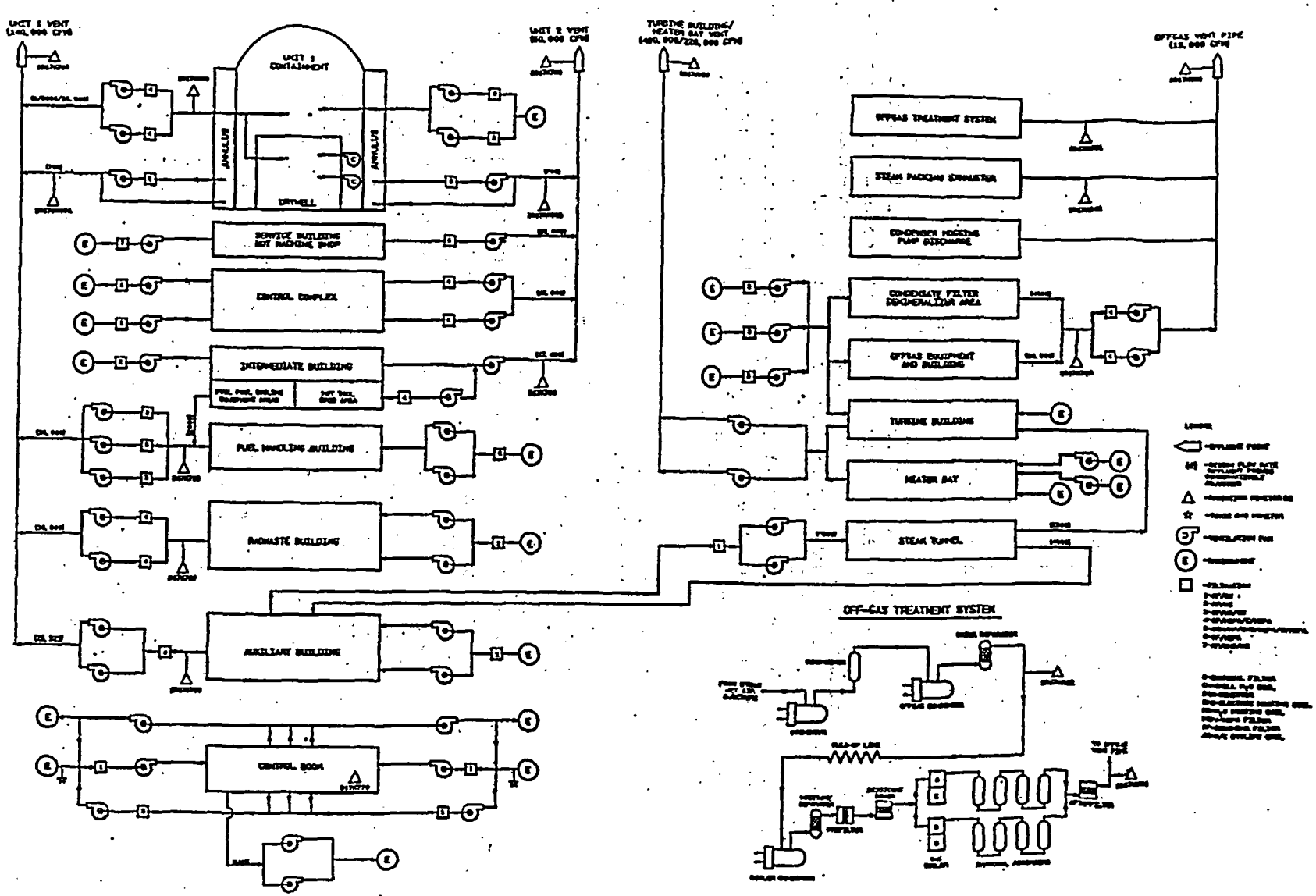

3.1 Monitor Alarm Setpoint Determination

The following calculation methods provide a means of determining the High Alarm Setpoint (HSP) and the Alert Setpoint (ASP) to ensure compliance with the regulatory dose rate limit to areas at or beyond the site boundary of 500 mrem/yr for the following noble gas monitors:

1. Unit 1 Vent radiation monitor (1D17K0786)

2. Unit 2 Vent radiation monitor (2D17K0786)

3. Off-Gas Vent radiation monitor (1D17K0836)

4. Turbine Building/Heater Bay Vent radiation monitor (1D17K0856)

The Unit 2 Vent radiation monitor is included for the operation of Unit 1 of the Perry Nuclear Power Plant because the second train of the Unit 1 Annulus Exhaust and the Control Complex and Intermediate Building ventilations are exhausted through the Unit 2 Vent.

The High Alarm Setpoint (HSP) for each release point radiation monitor will be set at 70% of the annual dose rate limit (350 mrem/yr) and the Alert Setpoint (ASP) will be at 10% of the annual dose rate limit (50 mrem/yr).

NOTE: These values are set as a small fraction of the total activity that may be released via the monitored pathways to ensure that the site boundary dose rate limits are not exceeded. Any single ASP can be exceeded without exceeding the 500 mrem/yr dose rate limit.

a. Upon receipt of an alert alarm, a sample from the alarming effluent path will be obtained and analyzed. If two or more effluent monitors exceed the ASP, or if any one effluent monitor exceeds the HSP, the potential exists that the 500 mrem/yr dose rate limit may be exceeded. In this case, all four effluent paths will be sampled and analyzed, with the appropriate actions initiated to limit gaseous releases to below the annual dose rate limit.

b. If a single HSP, or two or more ASPs continue to be exceeded, verification shall be made at least once per 4 hours, via the gaseous effluent radiation monitors, that plant releases are below the ODCM Appendix C 3.11.2.1 dose rate limits. Sampling and analysis shall be performed on the four gaseous effluent release points at least once per 12 hours.

This procedure determines the monitor alarm setpoints that indicate if the dose rate beyond the site boundary due to noble gas radionuclides in gaseous effluent released from the site exceeds 500 mrem/year to the whole body, or 3000 mrem/year to the skin.

3.1.1 Determination of the "Mix" (Noble Gas Radionuclide Composition) of the Gaseous Effluent

a. The gaseous source terms that are representative of the "mix" of the gaseous effluent are determined. Gaseous source terms are the concentrations of the noble gas radionuclides in the effluent as determined by analysis of the various sources of gaseous effluents. During the early period of plant operation, before a sufficient operational effluent source term data base has been obtained, source terms will be those generated by the GALE code, Revision 0 for PNPP (FSAR Tables 11.3-9 and 11.3-10).

b. Determination of the fraction of the total radioactivity in the gaseous effluent for each noble gas radionuclide in the gaseous effluent.

$$S_i = \frac{A_i}{\Sigma A_i} \qquad (3.1\text{-}1)$$

Where:

S_i = the fraction of the total for radionuclide "i" in the effluent;

A_i = the activity of radionuclide "i" in the gaseous effluent.

NOTE: If the activity of a noble gas radionuclide is below the lower limit of detection the noble gas radionuclide is not included as a source term in this setpoint calculation.

3.1.2 Determination of the Maximum Acceptable Total Activity Release Rate of Noble Gas Radionuclides in Gaseous Effluent Based on Whole Body Dose Rate Limit

$$Q_b = \frac{500}{\left(\chi/Q\right)\Sigma\left(K_i\right)\left(S_i\right)} \qquad (3.1\text{-}2)$$

Where:

Q_b = the maximum acceptable total activity release rate of all noble gas radionuclides in the effluent (for whole body exposure); μCi/s;

K_i = the whole body dose factor for a semi-infinite cloud of radionuclide "i" (includes 5g/cm^2 tissue attenuation) from Table 3.1-1, (mrem/yr)/(μCi/m^3);

S_i = the fraction of the total for radionuclide "i", as per equation 3.1.1;

χ/Q = the annual average dispersion factor in s/m^3 (see Appendix A);

NOTE: The dispersion parameters (χ/Q) used in these calculations are the highest calculated site boundary values for any of the land-based sectors only. At PNPP the site boundary locations in the following sectors are totally over water: N, NNE, NNW, NW, W, WNW.

500 = the whole body dose rate limit, in mrem/yr.

3.1.3 Determination of the Maximum Acceptable Total Activity Release Rate of Noble Gas Radionuclides in Gaseous Effluent Based on Skin Dose Rate Limit

$$Q_s = \frac{3000}{\left(\chi/Q\right) \Sigma \left(L_i + 1.11\, M_i\right)\left(S_i\right)} \qquad (3.1\text{-}3)$$

Where:

Q_s = the maximum acceptable total activity release rate of all noble gas radionuclides in the effluent (for skin exposure), in μCi/s;

L_i = the beta skin dose factor for a semi-infinite cloud of radionuclide "i" (includes attenuation by the outer "dead" layer of skin), in (mrem/yr)/(μCi/m^3);

M_i = the gamma air dose factor for a uniform semi-infinite cloud of radionuclide "i", in (mrad/yr)/(μCi/m^3);

S_i = the fraction of the total for radionuclide "i", per equation 3.1.1;

χ/Q = the annual average dispersion factor in s/m^3 (see Appendix A);

1.11 = the air dose to tissue dose equivalent conversion factor, in mrem/mrad;

3000 = the skin dose rate limit, in mrem/yr.

$\left(L_i + 1.11\, M_i\right)$ values are shown in Table 3.1-1.

Table 3.1-1

Whole Body and Skin Dose Factors

Radionuclide	Whole Body Dose Factor (K_i) (mrem/yr/µCi/m^3)	Skin Dose Factor (L_i+1.11 M_i) mrem/yr/µCi/m^3)
Kr-83m	7.56E-02	2.14E+01
Kr-85m	1.17E+03	2.83E+03
Kr-85	1.61E+01	1.36E+03
Kr-87	5.92E+03	1.66E+04
Kr-88	1.47E+04	1.92E+04
Kr-89	1.66E+04	2.93E+04
Xe-131m	9.15E+01	6.49E+02
Xe-133m	2.51E+02	1.36E+03
Xe-133	2.94E+02	6.97E+02
Xe-135	1.81E+03	3.99E+03
Xe-135m	3.12E+03	4.44E+03
Xe-137	1.42E+03	1.39E+04
Xe-138	8.83E+03	1.44E+04
Ar-41	8.84E+03	1.30E+04

3.1.4 Determination of the Maximum Acceptable Total Radioactivity Concentration of all Noble Gas Radionuclides in the Gaseous Effluent

$$C_t = \frac{\left(2.12 \times 10^{-3}\right)\left(Q_t\right)}{f} \qquad (3.1\text{-}4)$$

Where:

C_t = the maximum acceptable total radioactivity concentration of all noble gas radionuclides in the effluent, in µCi/cc;

f = the flow rate for the release point from the respective flow rate recorders, in ft^3/min;

NOTE: Design flow rates, which incorporate a 10% flow rate inaccuracy correction, may be used in lieu of actual flow rates.

Effluent Release Path	Flow Rate (cfm)
Unit 1 Vent	140,000
Unit 2 Vent	60,000
Off-Gas Vent	19,000
Turbine Building/Heater Bay Vent	400,000 (summer) 220,000 (winter)

Q_t = the smaller of Q_b and Q_s, calculated in equations 3.1-2 and 3.1-3, respectively, μCi/s;

2.12E-12 = the conversion factor to convert (μCi/s)(ft^3/min), μCi/cc.

3.1.5 Determination of the Maximum Acceptable Monitor Count Rate Above Background Attributed to Noble Gas Radionuclides

$$CR_c = (0.8)(C_t)(E_m) \qquad (3.1\text{-}5)$$

Where:

CR_c = the calculated monitor count rate above background attributed to noble gas radionuclides, in cpm;

C_t = the maximum acceptable radioactivity concentration, per equation 3.1-4, μCi/cc;

E_m = the detector efficiency of the monitor for the "mix" of noble gas radionuclides in the effluent, in cpm/(μCi/cc);

= the total μCi/cc concentration divided into the net monitor count rate taken at the time the sample was taken; during the early period of operation, before a sufficient operational effluent source term data base has been obtained, the value will be calculated using monitor calibration data;

0.8 = an engineering safety factor.

3.1.5.1 Determination of the Monitor High Alarm Setpoint

$$HSP = (0.70)(CR_c) + BG \qquad (3.1\text{-}6)$$

Where:

HSP = the high alarm setpoint (including background), in cpm;

BG = the background count rate due to internal contamination and radiation levels in the area in which the monitor is installed when the monitor chamber is filled with uncontaminated air, in cpm;

CR_C = the calculated monitor net count rate, per equation 3.1-5, in cpm;

0.70 = the fraction of the maximum acceptable activity that may be released from the vent to ensure that the site boundary dose rate limits are not exceeded during concurrent releases from several pathways.

3.1.5.2 Determination of the Monitor Alert Setpoint

$$ASP = (0.10)(CR_C) + BG \qquad (3.1\text{-}7)$$

Where:

ASP = the alert setpoint (including background), in cpm;

BG = the background count rate due to internal contamination and radiation levels in the area in which the monitor is installed when the monitor chamber is filled with uncontaminated air, in cpm;

CR_C = the calculated monitor net count rate, per equation 3.1-5, cpm;

0.10 = the fraction of the maximum acceptable activity that may be released from the vent to ensure that the site boundary dose rate limits are not exceeded during concurrent releases from several pathways.

3.2 10CFR20 Compliance - Gaseous Effluent Dose Rate

Dose rates resulting from the release of noble gases, radioiodines, tritium, and radionuclides in particulate form must be calculated to show compliance with 10CFR20. The limits of 10CFR20 are conservatively applied for the release period at the controlling location.

3.2.1 Noble Gases

The dose rate in unrestricted areas resulting from noble gas effluents is limited, by ODCM Appendix C controls, to 500 mrem/yr to the whole body and 3000 mrem/yr to the skin. Only the external dose pathway will be considered for noble gases. Because all gaseous effluent releases from PNPP are considered ground level, the controlling location for these dose rate limits is the site boundary location (see Figure 3.2-1) with the highest relative dispersion factor (χ/Q). (See Appendix A for elaboration on atmospheric dispersion.)

The alarm setpoint determinations discussed in the previous section should ensure compliance with these dose rate limits. However, if any one high alarm or two or more alert alarms occur, the dose rates in unrestricted areas resulting from the release of noble gas radionuclides from all vents will be calculated. The calculations will be based on the results of analyses obtained pursuant to the ODCM, Appendix C, CONTROLS.

3.2.2 Radioiodines, Particulates, and Other Radionuclides

The dose rate in unrestricted areas resulting from the release of iodine-131, iodine-133, tritium, and all radionuclides in particulate form with half-lives greater than eight days is limited, by ODCM Appendix C controls, to 1500 mrem/yr to any organ. The calculation of dose rate from these radionuclides will be performed based on results of analyses obtained pursuant to those Appendix C controls. The controlling location for this limit is the location of the highest relative deposition (D/Q) for the period of release as well as the actual receptor pathway. The receptor pathway locations will be reviewed once per year following the performance of the Land Use Census to include consideration of nearest residences, garden, and farm animal locations in each sector.

3.2.3 Dose Rate Calculations

The following is the equation used to calculate the dose rate resultant from the release of radioactive materials in gaseous effluents to areas at or beyond the site boundary for the purpose of showing compliance with ODCM Appendix C controls as related to 10CFR20.

$$D_{ajp} = \left(3.15\text{x}10^{1}\right)\left(\chi/Q \text{ or } D/Q\right)\Sigma\left(DF_{aijp}\right)\left(Q_i\right) \qquad (3.2\text{-}1)$$

Where:

D_{ajp} = the organ "j" dose rate as a function of age group "a" and pathway "p", mrem/yr;

DF_{aijp} = the dose factor for organ type "j", age group "a", pathway "p" for isotope "i" (see Tables 3.2-1 through 3.2-3); units and equations used (equations 3.2-2 through 3.2-6) are provided later in this section;

(χ/Q or D/Q) = the normal or depleted relative dispersion factor (χ/Q) in s/m^3, or relative deposition (D/Q) in m^{-2}, at the receptor distance (see Appendix A);

$3.15\text{x}10^{1}$ = conversion factor to convert (mrem*μCi)/(Ci*s) to mrem/yr;

Q_i = release rate of isotope "i" (annualized) , μCi/s

$= (472)(C_i)(f)$

Where:

C_i = the concentration of radionuclide "i" in the gaseous effluent, in μCi/cc;

f = the gaseous effluent flow rate during the release, ft^3/min;

472 = conversion factor, $(cc/ft^3)/(s/min)$.

The following relationships are used to derive the dose factors (Df_{aijp}) for noble gases, tritium, radioiodines and particulates used in equation 3.2-1.

a. Whole Body Dose Factors from Exposure to a Semi-Infinite Plume

$$DF_i^T = (S_F)(\chi_i)(DFB_i) \qquad (3.2\text{-}2)$$

Where:

DF_i^T = the whole body factor due to immersion in a semi-infinite cloud of radionuclide "i", $(mrem * m^3)/(Ci * s)$;

DFB_i = the whole body gamma dose factor for a semi-infinite cloud of radionuclide "i" which includes the attenuation of $5 g/cm^2$ of tissue from Table 3.2-4, mrem/yr per pCi/m^3;

S_F = the attenuation factor that accounts for the dose reduction due to the shielding provided by residential structures, optional, dimensionless:

= maximum exposed individual = 0.7, population dose 0.5 (Regulatory Guide 1.109), if calculating dose rate = 1.0;

χ_i = the annual average concentration of radionuclide "i" in air (pCi/m^3), for a unit release rate (Ci/yr) and a unit χ/Q (s/m^3), $(pCi/m^3)/(Ci/yr)(s/m^3)$.

b. Skin Dose Factors for Exposure to a Semi-Infinite Plume

$$DF_i^S = (\chi_i)\left[(1.11)(S_F)\left(DF_i^\gamma\right) + (DFS_i)\right] \qquad (3.2\text{-}3)$$

Where:

DF_i^S = the skin dose factor due to immersion in a semi-infinite cloud of radionuclide "i", (mrem * m^3)/(Ci * s);

DF_i^γ = the gamma air dose factor for a uniform semi-infinite cloud of radionuclide "i", from Table 3.2-4, mrad/yr per pCi/m^3;

DSF_i = the beta skin dose factor for a semi-infinite cloud of radionuclide "i" (includes attenuation by the outer "dead" layer of skin), from Table 3.2-4, mrem/yr per pCi/m^3;

S_F = the attenuation factor that accounts for the dose reduction due to the shielding provided by residential structures, optional, dimensionless:

= maximum exposed individual = 0.7, population dose 0.5 (Regulatory Guide 1.109), if calculating dose rate = 1.0;

χ_i = the annual average concentration of radionuclide "i" in air (pCi/m^3), for a unit release rate (Ci/yr) and a unit χ/Q (s/m^3), (pCi/m^3)/(Ci/yr)(s/m^3);

1.11 = the air dose to tissue dose equivalent conversion factor, mrem/mrad.

c. Dose Factors from External Irradiation from Radionuclides Deposited onto the Ground Surface

$$DF_{ij}^G = (8760)\left(C_i^G\right)\left(DFG_{ij}\right)\left(S_F\right) \qquad (3.2\text{-}4)$$

Where:

DF_{ij}^G = the dose factor for radionuclide "i" to organ "j" resulting from exposure to radionuclides deposited onto the ground surface, (mrem * m^2)/Ci;

C_i^G = the ground plane concentration (pCi/m^2) of radionuclide "i" for a unit release rate (Ci/yr) and a unit D/Q, relative ground deposition (m^{-2}), (pCi/m^2)/(Ci/yr)(m^{-2});

DFG_{ij} = the open field ground plane dose conversion factor for organ "j" from radionuclide "i", from Table 3.2-5, mrem/yr per pCi/m^2;

S_F = the attenuation factor that accounts for the dose reduction due to the shielding provided by residential structures, optional, dimensionless:

= maximum exposed individual = 0.7, population dose 0.5 (Regulatory Guide 1.109), if calculating dose rate = 1.0;

8760 = the number of hours per year.

d. Dose Factors from Inhalation of Radionuclides in Air

$$DF^{A}_{aij} = \left(DFA_{aij}\right)\left(R_a\right)\left(\chi_i\right) \qquad (3.2\text{-}5)$$

Where:

DF^{A}_{aij} = the dose factor for radionuclide "i" to organ "j" of an individual in age group "a" due to inhalation, (mrem m^3)/(Ci s) [equivalent to (mrem/yr)(yr/Ci)(m^3/s)];

DFA_{aij} = the inhalation dose factor for radionuclide "i", organ "j", and age group "a" (the value for skin is assumed to be 0), from Tables 3.2-6 through 3.2-9, mrem/pCi;

R_a = the annual air intake for individuals in age group "a", from Table 3.2-14, m^3/yr;

χ_i = the annual average concentration of radionuclide "i" in air (pCi/m^3), for a unit release rate (Ci/yr) and a unit χ/Q (s/m^3), (pCi/m^3)/(Ci/yr)(s/m^3).

e. Dose Factors from the Ingestion of Atmospherically Released Radionuclides in Food

$$DF^{D}_{aij} = DFI_{aij}\left[\left(U^{F}_{A}\right)\left(C^{F}_{i}\right)+\left(U^{L}_{A}\right)\left(f_{L}\right)\left(C^{L}_{i}\right)+\left(U^{M}_{a}\right)\left(C^{M}_{i}\right)+\left(U^{V}_{a}\right)\left(f_{V}\right)\left(C^{V}_{i}\right)\right] \quad (3.2\text{-}6)$$

Where:

DF^{D}_{aij} = the dose factor for radionuclide "i" to organ "j" of an individual in age group "a" from the ingestion of meat, leafy vegetables, milk, and produce (non-leafy vegetables, fruits, and grains) in (mrem * m^2)/Ci, or in the cases of H-3 and C-14 in (mrem * m^3)/(Ci * s);

C^{F}_{i}, C^{L}_{i}, C^{M}_{i}, C^{V}_{i} = the concentrations of radionuclide "i" in meat, leafy vegetables, milk, and produce, respectively (pCi/kg or pCi/L) for a unit release rate (Ci/yr) and a unit D/Q, relative ground deposition (m^{-2}), or in cases of H^{-3} and C^{-14}, a unit χ/Q, relative ground-level concentration (s/m^3), in (pCi/kg)(Ci/yr)(m^{-2}) or (pCi/kg)/(Ci/yr)(s/m^3) or (pCi/L)/(Ci/yr)(m^{-2}) or (pCi/L)(yr/Ci)(s/m^3);

DFI_{aij} = the ingestion dose factor for radionuclide "i", organ "j", and age group "a", from Tables 3.2-10 through 3.2-13, mrem/pCi;

f_L, f_V = the respective fractions of the ingestion rates of leafy vegetables and produce that are produced in the garden of interest, 1.0 and 0.76 respectively (Regulatory Guide 1.109);

U^{F}_{a}, U^{L}_{a}, U^{M}_{a}, U^{V}_{a} = the annual intake (usage) of meat, leafy vegetables, milk, and produce respectively, for individuals in age group "a", from Table 3.2-14, kg/yr or l/yr.

f. Dose rate example problem:

1) For the purpose of this sample problem, the following assumptions are utilized: a release of Xe133 at 1.0E-5uCi/cc, a flow rate of 1.0E5ft^3/min, and a whole body dose factor of 2.94E-4 mrem/yr per pCi/m^3. Dose rate and 1 hour cumulative dose are calculated.

2) Whole Body Dose Factor per ODCM equation 3.2-2.

For final dose calculation

$$DF_i^T = (0.7)\left(2.94E-04\frac{mrem/yr}{pCi/m^3}\right)\left(\frac{1E+12\,pCi/m^3}{(Ci/yr)(3.15E+07\,sec/m^3)}\right) = 6.52\frac{mrem\,m^3}{Ci\,sec}$$

For dose rate

$$DF_i^T = (1.0)\left(2.94E-04\frac{mrem/yr}{pCi/m^3}\right)\left(\frac{1E+12\,pCi/m^3}{(Ci/yr)(3.15E+07\,sec/m^3)}\right) = 9.33\frac{mrem\,m^3}{Ci\,sec}$$

3) Dose Rate per ODCM equation 3.2-1.

For final dose calculation

$$(3.15E1)\left(5.8E-6\frac{sec}{m^3}\right)\left(6.52\frac{mrem\,m^3}{Ci\,sec}\right)\left(472\frac{cc\,min}{ft^3\,sec}\right)\left(1.05E-5\frac{\mu Ci}{cc}\right)\left(1E5\frac{ft^3}{min}\right) = 0.590\frac{mrem}{yr}$$

For dose rate

$$(3.15E1)\left(5.8E-6\frac{sec}{m^3}\right)\left(9.33\frac{mrem\,m^3}{Ci\,sec}\right)\left(472\frac{cc\,min}{ft^3\,sec}\right)\left(1.05E-5\frac{\mu Ci}{cc}\right)\left(1E5\frac{ft^3}{min}\right) = 0.845\frac{mrem}{yr}$$

Final dose calculation

$$\left(0.590\frac{mrem}{yr}\right)(1\,hr)\left(\frac{1\,yr}{8760\,hr}\right) = 6.74E-5\,mrem$$

Table 3.2-1
Organ Used for Gaseous Effluent Dose Calculations

1. Bone
2. GI Tract
3. Kidney
4. Liver
5. Lung
6. Thyroid
7. Whole Body
8. Skin

Table 3.2-2
Age Groups Used for Gaseous Effluent Dose Calculations

1. Adult (17 yr and older)
2. Teen (11-17 yr)
3. Child (1-11 yr)
4. Infant (0-1 yr)

Table 3.2-3
Gaseous Effluent Dose Pathways

1. Plume
2. Ground Shine
3. Vegetables
4. Meat
5. Cow Milk
6. Goat Milk
7. Inhalation

Table 3.2-4
Dose Factors for Exposure to a Semi-Infinite Cloud of Noble Gases

Nuclide	Whole Body* Gamma Dose Factor (DFB_i)	Beta Skin* Dose Factor (DFS_i)	Gamma Air** Dose Factor γ (DF_i)
Kr-83m	7.56E-08	---	1.93E-05
Kr-85m	1.17E-03	1.46E-03	1.23E-03
Kr-85	1.61E-05	1.34E-03	1.72E-05
Kr-87	5.92E-03	9.73E-03	6.17E-03
Kr-88	1.47E-02	2.37E-03	1.52E-02
Kr-89	1.66E-02	1.01E-02	1.73E-02
Kr-90	1.56E-02	7.29E-03	1.63E-02
Xe-131m	9.15E-05	4.76E-04	1.56E-04
Xe-133m	2.51E-04	9.94E-04	3.27E-04
Xe-133	2.94E-04	3.06E-04	3.53E-04
Xe-135m	3.12E-03	7.11E-04	3.36E-03
Xe-135	1.81E-03	1.86E-03	1.92E-03
Xe-137	1.42E-03	1.22E-02	1.51E-03
Xe-138	8.83E-03	4.13E-03	9.21E-03
Ar-41	8.84E-03	2.69E-03	9.30E-03

* mrem/yr per pCi/m^3
** mrad/yr per pCi/m^3

Table 3.2-5
External Dose Factors for Standing on Contaminated Ground
(mrem/h per pCi/m^2)

Element	Whole Body	Skin
H-3	0.0	0.0
C-14	0.0	0.0
NA-24	2.50E-08	2.90E-08
P-32	0.0	0.0
Cr-51	2.20E-10	2.60E-10
Mn-54	5.80E-09	6.80E-09
Mn-56	1.10E-08	1.30E-08
Fe-55	0.0	0.0
Fe-59	8.00E-09	9.40E-09
Co-58	7.00E-09	8.20E-09
Co-60	1.70E-08	2.00E-08
Ni-63	0.0	0.0
Nr-65	3.70E-09	4.30E-09
Cu-64	1.50E-09	1.70E-09
Zn-65	4.00E-09	4.60E-09
Zn-69	0.0	0.0
Br-83	6.40E-11	9.30E-11
Br-84	1.20E-08	1.40E-08
Br-85	0.0	0.0
Rb-86	6.30E-10	7.20E-10
Rb-88	3.50E-09	4.00E-09
Rb-89	1.50E-08	1.80E-08
Sr-89	5.60E-13	6.50E-13
Sr-91	7.10E-09	8.30E-09
Sr-92	9.00E-09	1.00E-08
Y-90	2.20E-12	2.60E-12
Y-91M	3.80E-09	4.40E-09
Y-91	2.40E-11	2.70E-11
Y-92	1.60E-09	1.90E-09
Y-93	5.70E-10	7.80E-10
Zr-95	5.00E-09	5.80E-09
Zr-97	5.50E-09	6.40E-09
Mo-95	5.10E-09	6.00E-09
Mo-99	1.90E-09	2.20E-09
Tc-99M	9.60E-10	1.10E-09
Tc-101	2.70E-09	3.00E-09
Ru-103	3.60E-09	4.20E-09
Ru-105	4.50E-09	5.10E-09
Ru-106	1.50E-09	1.80E-09
Ag-110N	1.80E-08	2.10E-08

Table 3.2-5 (Cont.)
External Dose Factors for Standing on Contaminated Ground
(mrem/h per pCi/m^2)

Element	Whole Body	Skin
Te-125M	3.50E-11	4.80E-11
Te-127M	1.10E-12	1.30E-12
Te-127	1.00E-11	1.10E-11
Te-129M	7.70E-10	9.00E-10
Te-129	7.10E-10	8.40E-10
Te-131M	8.40E-09	9.90E-09
Te-131	2.20E-09	2.60E-06
Te-132	1.70E-09	2.00E-09
I-130	1.40E-08	1.70E-08
I-131	2.80E-09	3.40E-09
I-132	1.70E-08	2.00E-08
I-133	3.70E-09	4.50E-09
I-134	1.60E-08	1.90E-08
I-135	1.20E-08	1.40E-08
Cs-134	1.20E-08	1.40E-08
Cs-136	1.50E-08	1.70E-08
Cs-137	4.20E-09	4.90E-09
Cs-138	2.10E-08	2.40E-08
Ba-139	2.40E-09	2.70E-09
Ba-140	2.10E-09	2.40E-09
Ba-141	4.30E-09	4.90E-09
Ba-142	7.90E-09	9.00E-09
La-140	1.50E-08	1.70E-08
La-142	1.50E-08	1.80E-08
Ce-141	5.50E-10	6.20E-10
Ce-143	2.20E-09	2.50E-09
Ce-144	3.20E-10	3.70E-10
Pr-143	0.0	0.0
Pr-144	2.00E-10	2.30E-10
Nd-147	1.00E-09	1.20E-09
W-187	3.10E-09	3.60E-09
Np-239	9.50E-10	1.10E-09

Table 3.2-6
Inhalation Dose Factors for Adult (mrem/pCi inhaled)

NUCLIDE	BONE	LIVER	WHOLE BODY	THYROID	KIDNEY	LUNG	GI-LLI
H 3	NO DATA	1.58E-07	1.58E-07	1.58E-07	1.58E-07	1.58E-07	1.58E-07
C 14	2.27E-06	4.26E-07	4.26E-07	4.26E-07	4.26E-07	4.26E-07	4.26E-07
NA 24	1.28E-06	1.28E-06	1.28E-06	1.28E-06	1.28E-06	1.28E-06	1.28E-06
P 32	1.65E-04	9.64E-06	6.26E-06	NO DATA	NO DATA	NO DATA	1.08E-05
CR 51	NO DATA	NO DATA	1.25E-08	7.44E-09	2.85E-09	1.80E-06	4.15E-07
MN 54	NO DATA	4.95E-06	7.87E-07	NO DATA	1.23E-06	1.75E-04	9.67E-06
MN 56	NO DATA	1.55E-10	2.29E-11	NO DATA	1.63E-10	1.18E-06	2.53E-06
FE 55	3.07E-06	2.12E-06	4.23E-07	NO DATA	NO DATA	9.01E-06	7.54E-07
FE 59	1.47E-06	3.47E-06	1.32E-06	NO DATA	NO DATA	1.27E-04	2.35E-05
CO 58	NO DATA	1.98E-07	2.59E-07	NO DATA	NO DATA	1.16E-04	1.33E-05
CO 60	NO DATA	1.44E-06	1.85E-06	NO DATA	NO DATA	7.46E-05	3.56E-05
NI 63	5.40E-05	3.93E-06	1.81E-06	NO DATA	NO DATA	2.23E-05	1.67E-06
NI 65	1.92E-10	2.62E-11	1.14E-11	NO DATA	NO DATA	7.00E-07	1.54E-06
CU 64	NO DATA	1.83E-10	7.69E-11	NO DATA	5.78E-10	8.48E-07	6.12E-06
ZN 65	4.05E-06	1.29E-05	5.82E-06	NO DATA	8.62E-06	1.08E-04	6.68E-06
ZN 69	4.23E-12	8.14E-12	5.65E-13	NO DATA	5.27E-12	1.15E-07	2.04E-09
BR 83	NO DATA	NO DATA	3.01E-08	NO DATA	NO DATA	NO DATA	2.90E-08
BR 84	NO DATA	NO DATA	3.91E-08	NO DATA	NO DATA	NO DATA	2.05E-13
BR 85	NO DATA	NO DATA	1.60E-09	NO DATA	NO DATA	NO DATA	LT E-24
RB 86	NO DATA	1.69E-05	7.37E-06	NO DATA	NO DATA	NO DATA	2.08E-06
RB 88	NO DATA	4.84E-08	2.41E-08	NO DATA	NO DATA	NO DATA	4.18E-19
RB 89	NO DATA	3.20E-08	2.12E-08	NO DATA	NO DATA	NO DATA	1.16E-21
SR 89	3.80E-05	NO DATA	1.09E-06	NO DATA	NO DATA	1.75E-04	4.37E-05
SR 90	1.24E-02	NO DATA	7.62E-04	NO DATA	NO DATA	1.20E-03	9.02E-05
SR 91	7.74E-09	NO DATA	3.13E-10	NO DATA	NO DATA	4.56E-06	2.39E-05
SR 92	8.43E-10	NO DATA	3.64E-11	NO DATA	NO DATA	2.06E-06	5.38E-06
Y 90	2.61E-07	NO DATA	7.01E-09	NO DATA	NO DATA	2.12E-05	6.32E-05
Y 91M	3.26E-11	NO DATA	1.27E-12	NO DATA	NO DATA	2.40E-07	1.66E-10
Y 91	5.78E-05	NO DATA	1.55E-06	NO DATA	NO DATA	2.13E-04	4.81E-05
Y 92	1.29E-09	NO DATA	3.77E-11	NO DATA	NO DATA	1.96E-06	9.19E-06
Y 93	1.18E-08	NO DATA	3.26E-10	NO DATA	NO DATA	6.06E-06	5.27E-05
ZR 95	1.34E-05	4.30E-06	2.91E-06	NO DATA	6.77E-06	2.21E-04	1.88E-05
ZR 97	1.21E-08	2.45E-09	1.13E-09	NO DATA	3.71E-09	9.84E-06	6.54E-05
NB 95	1.76E-06	9.77E-07	5.26E-07	NO DATA	9.67E-07	6.31E-05	1.30E-05
MO 99	NO DATA	1.51E-08	2.87E-09	NO DATA	3.64E-08	1.14E-05	3.10E-05
TC 99M	1.29E-13	3.64E-13	4.63E-12	NO DATA	5.52E-12	9.55E-08	5.20E-07

Table 3.2-6 (Cont.)
Inhalation Dose Factors for Adult (mrem/pCi inhaled)

NUCLIDE	BONE	LIVER	WHOLE BODY	THYROID	KIDNEY	LUNG	GI-LLI
TC101	5.22E-15	7.52E-15	7.38E-14	NO DATA	1.35E-13	4.99E-08	1.36E-21
RU103	1.91E-07	NO DATA	8.23E-08	NO DATA	7.29E-07	6.31E-05	1.38E-05
RU105	9.88E-11	NO DATA	3.89E-11	NO DATA	1.27E-10	1.37E-06	6.02E-06
RU106	8.64E-06	NO DATA	1.00E-06	NO DATA	1.67E-05	1.17E-03	1.14E-04
AG110M	1.35E-06	1.25E-06	7.43E-07	NO DATA	2.46E-06	5.79E-04	3.78E-05
TE125M	4.27E-07	1.98E-07	5.84E-08	1.31E-07	1.55E-06	3.92E-05	8.83E-05
TE127M	1.58E-06	7.21E-07	1.96E-07	4.11E-07	5.72E-06	1.20E-04	1.87E-05
TE127	1.75E-10	8.00E-11	3.87E-11	1.32E-10	6.37E-10	8.14E-07	7.17E-06
TE129M	1.22E-06	5.84E-07	1.98E-07	4.30E-07	4.57E-06	1.45E-04	4.79E-05
TE129	6.22E-12	2.99E-12	1.55E-12	4.87E-12	2.34E-11	2.42E-07	1.96E-08
TE131M	8.74E-09	5.45E-09	3.63E-09	6.88E-09	3.86E-08	1.82E-05	6.95E-05
TE131	1.39E-12	7.44E-13	4.49E-13	1.17E-12	5.46E-12	1.74E-07	2.30E-09
TE132	3.25E-08	2.69E-08	2.02E-08	2.37E-08	1.82E-07	3.60E-05	6.37E-05
I 130	5.72E-07	1.68E-06	6.60E-07	1.42E-04	2.61E-06	NO DATA	9.61E-07
I 131	3.15E-06	4.47E-06	2.56E-06	1.49E-03	7.66E-06	NO DATA	7.85E-07
I 132	1.45E-07	4.07E-07	1.45E-07	1.43E-05	6.48E-07	NO DATA	5.08E-08
I 133	1.08E-06	1.85E-06	5.65E-07	2.69E-04	3.23E-06	NO DATA	1.11E-06
I 134	8.05E-08	2.16E-07	7.69E-08	3.73E-06	3.44E-07	NO DATA	1.26E-10
I 135	3.35E-07	8.73E-07	3.21E-07	5.60E-05	1.39E-06	NO DATA	6.56E-07
CS134	4.66E-05	1.06E-04	9.10E-05	NO DATA	3.59E-05	1.22E-05	1.30E-06
CS136	4.88E-06	1.83E-05	1.38E-05	NO DATA	1.07E-05	1.50E-06	1.46E-06
CS137	5.98E-05	7.76E-05	5.35E-05	NO DATA	2.78E-05	9.40E-06	1.05E-06
CS138	4.14E-08	7.76E-08	4.05E-08	NO DATA	6.00E-08	6.07E-09	2.33E-13
BA139	1.17E-10	8.32E-14	3.42E-12	NO DATA	7.78E-14	4.70E-07	1.12E-07
BA140	4.88E-06	6.13E-09	3.21E-07	NO DATA	2.09E-09	1.59E-04	2.73E-05
BA141	1.25E-11	9.41E-15	4.20E-13	NO DATA	8.75E-15	2.42E-07	1.45E-17
BA142	3.29E-12	3.38E-15	2.07E-13	NO DATA	2.86E-15	1.49E-07	1.96E-26
LA140	4.30E-08	2.17E-08	5.73E-09	NO DATA	NO DATA	1.70E-05	5.73E-05
LA142	8.54E-11	3.88E-11	9.65E-12	NO DATA	NO DATA	7.91E-07	2.64E-07
CE141	2.49E-06	1.69E-06	1.91E-07	NO DATA	7.83E-07	4.52E-05	1.50E-05
CE143	2.33E-08	1.72E-08	1.91E-09	NO DATA	7.60E-09	9.97E-06	2.83E-05
CE144	4.29E-04	1.79E-04	2.30E-05	NO DATA	1.06E-04	9.72E-04	1.02E-04
PR143	1.17E-06	4.69E-07	5.80E-08	NO DATA	2.70E-07	3.51E-05	2.50E-05
PR144	3.76E-12	1.56E-12	1.91E-13	NO DATA	8.81E-13	1.27E-07	2.69E-18
ND147	6.59E-07	7.62E-07	4.56E-08	NO DATA	4.45E-07	2.76E-05	2.16E-05
W 187	1.06E-09	8.85E-10	3.10E-10	NO DATA	NO DATA	3.63E-06	1.94E-05
NP239	2.37E-08	2.82E-09	1.55E-09	NO DATA	8.75E-09	4.70E-06	1.49E-05

Table 3.2-7
Inhalation Dose Factors for Teenager (mrem/pCi inhaled)

NUCLIDE	BONE	LIVER	WHOLE BODY	THYROID	KIDNEY	LUNG	GI-LLI
H 3	NO DATA	1.59E-07	1.59E-07	1.59E-07	1.59E-07	1.59E-07	1.59E-07
C 14	3.25E-06	6.09E-07	6.09E-07	6.09E-07	6.09E-07	6.09E-07	6.09E-07
NA 24	1.72E-06	1.72E-06	1.72E-06	1.72E-06	1.72E-06	1.72E-06	1.72E-06
P 32	2.36E-04	1.37E-05	8.95E-06	NO DATA	NO DATA	NO DATA	1.16E-05
CR 51	NO DATA	NO DATA	1.69E-08	9.37E-09	3.84E-09	2.62E-06	3.75E-07
MN 54	NO DATA	6.32E-06	1.05E-06	NO DATA	1.59E-06	2.48E-04	8.35E-06
MN 56	NO DATA	2.12E-10	3.15E-11	NO DATA	2.24E-10	1.90E-06	7.18E-06
FE 55	4.18E-06	2.98E-06	6.93E-07	NO DATA	NO DATA	1.55E-05	7.99E-07
FE 59	1.29E-06	4.62E-06	1.79E-06	NO DATA	NO DATA	1.91E-04	2.23E-05
CO 58	NO DATA	2.59E-07	3.47E-07	NO DATA	NO DATA	1.68E-04	1.19E-05
CO 60	NO DATA	1.89E-06	2.48E-06	NO DATA	NO DATA	1.09E-03	3.24E-05
NI 63	7.25E-05	5.43E-06	2.47E-06	NO DATA	NO DATA	3.84E-05	1.77E-06
NI 65	2.73E-10	3.66E-11	1.59E-11	NO DATA	NO DATA	1.17E-06	4.59E-06
CU 64	NO DATA	2.54E-10	1.06E-10	NO DATA	8.01E-10	1.39E-06	7.68E-06
ZN 65	4.82E-06	1.67E-05	7.80E-06	NO DATA	1.08E-05	1.55E-04	5.83E-06
ZN 69	6.04E-12	1.15E-11	8.07E-13	NO DATA	7.53E-12	1.98E-07	3.56E-08
BR 83	NO DATA	NO DATA	4.30E-08	NO DATA	NO DATA	NO DATA	LT E-24
BR 84	NO DATA	NO DATA	5.41E-08	NO DATA	NO DATA	NO DATA	LT E-24
BR 85	NO DATA	NO DATA	2.29E-09	NO DATA	NO DATA	NO DATA	LT E-24
RB 86	NO DATA	2.38E-05	1.05E-05	NO DATA	NO DATA	NO DATA	2.21E-06
RB 88	NO DATA	6.82E-08	3.40E-08	NO DATA	NO DATA	NO DATA	3.65E-15
RB 89	NO DATA	4.40E-08	2.91E-08	NO DATA	NO DATA	NO DATA	4.22E-17
SR 89	5.43E-05	NO DATA	1.56E-06	NO DATA	NO DATA	3.02E-04	4.64E-05
SR 90	1.35E-02	NO DATA	8.35E-04	NO DATA	NO DATA	2.06E-03	9.56E-05
SR 91	1.10E-08	NO DATA	4.39E-10	NO DATA	NO DATA	7.59E-06	3.24E-05
SR 92	1.19E-09	NO DATA	5.08E-11	NO DATA	NO DATA	3.43E-06	1.49E-05
Y 90	3.73E-07	NO DATA	1.00E-08	NO DATA	NO DATA	3.66E-05	6.99E-05
Y 91M	4.63E-11	NO DATA	1.77E-12	NO DATA	NO DATA	4.00E-07	3.77E-09
Y 91	8.26E-05	NO DATA	2.21E-06	NO DATA	NO DATA	3.67E-04	5.11E-05
Y 92	1.84E-09	NO DATA	5.36E-11	NO DATA	NO DATA	3.35E-06	2.06E-05
Y 93	1.69E-08	NO DATA	4.65E-10	NO DATA	NO DATA	1.04E-05	7.24E-05
ZR 95	1.82E-05	5.73E-06	3.94E-06	NO DATA	8.42E-06	3.36E-04	1.86E-05
ZR 97	1.72E-08	3.40E-09	1.57E-09	NO DATA	5.15E-09	1.62E-05	7.88E-05
NB 95	2.32E-06	1.29E-06	7.08E-07	NO DATA	1.25E-06	8.39E-05	1.21E-05
MO 99	NO DATA	2.11E-08	4.03E-09	NO DATA	5.14E-08	1.92E-05	3.36E-05
TC 99M	1.73E-13	4.83E-13	6.24E-12	NO DATA	7.20E-12	1.44E-07	7.66E-07

Table 3.2-7 (Cont.)
Inhalation Dose Factors for Teenager (mrem/pCi inhaled)

NUCLIDE	BONE	LIVER	WHOLE BODY	THYROID	KIDNEY	LUNG	GI-LLI
TC101	7.40E-15	1.05E-14	1.03E-13	NO DATA	1.90E-13	8.34E-08	1.09E-16
RU103	2.63E-07	NO DATA	1.12E-07	NO DATA	9.29E-07	9.79E-05	1.36E-05
RU105	1.40E-10	NO DATA	5.42E-11	NO DATA	1.76E-10	2.27E-06	1.13E-05
RU106	1.23E-05	NO DATA	1.55E-06	NO DATA	2.38E-05	2.01E-03	1.20E-04
AG110M	1.73E-06	1.64E-06	9.99E-07	NO DATA	3.13E-06	8.44E-04	3.41E-05
TE125M	6.10E-07	2.80E-07	8.34E-08	1.75E-07	NO DATA	6.70E-05	9.38E-06
TE127M	2.25E-06	1.02E-06	2.73E-07	5.48E-07	8.17E-06	2.07E-04	1.99E-05
TE127	2.51E-10	1.14E-10	5.52E-11	1.77E-10	9.10E-10	1.40E-06	1.01E-05
TE129M	1.74E-06	8.23E-07	2.81E-07	5.72E-07	6.49E-06	2.47E-04	5.06E-05
TE129	8.87E-12	4.22E-12	2.20E-12	6.48E-12	3.32E-11	4.12E-07	2.02E-07
TE131M	1.23E-08	7.51E-09	5.03E-09	9.06E-09	5.49E-08	2.97E-05	7.76E-05
TE131	1.97E-12	1.04E-12	6.30E-13	1.55E-12	7.72E-12	2.97E-07	1.89E-09
TE132	4.50E-08	3.63E-08	2.74E-08	3.07E-08	2.44E-07	5.61E-05	5.79E-05
I 130	7.80E-07	2.24E-06	8.96E-07	1.86E-04	3.44E-06	NO DATA	1.14E-06
I 131	4.43E-06	6.14E-06	3.30E-06	1.83E-03	1.05E-05	NO DATA	8.11E-07
I 132	1.99E-07	5.47E-07	1.97E-07	1.89E-05	8.65E-07	NO DATA	1.59E-07
I 133	1.52E-06	2.56E-06	7.78E-07	3.65E-04	4.49E-06	NO DATA	1.29E-06
I 134	1.11E-07	2.90E-07	1.05E-07	4.94E-06	4.58E-07	NO DATA	2.55E-09
I 135	4.62E-07	1.18E-06	4.36E-07	7.76E-05	1.86E-06	NO DATA	8.69E-07
CS134	6.28E-05	1.41E-04	6.86E-05	NO DATA	4.69E-05	1.83E-05	1.22E-06
CS136	6.44E-06	2.42E-05	1.71E-05	NO DATA	1.38E-05	2.22E-06	1.36E-06
CS137	8.38E-05	1.06E-04	3.89E-05	NO DATA	3.80E-05	1.51E-05	1.06E-06
CS138	5.82E-08	1.07E-07	5.58E-08	NO DATA	8.28E-08	9.84E-09	3.38E-11
BA139	1.67E-10	1.18E-13	4.87E-12	NO DATA	1.11E-13	8.08E-07	8.06E-07
BA140	6.84E-06	8.38E-09	4.40E-07	NO DATA	2.85E-09	2.54E-04	2.86E-05
BA141	1.78E-11	1.32E-14	5.93E-13	NO DATA	1.23E-14	4.11E-07	9.33E-14
BA142	4.62E-12	4.63E-15	2.84E-13	NO DATA	3.92E-15	2.39E-07	5.99E-20
LA140	5.99E-08	2.95E-08	7.82E-09	NO DATA	NO DATA	2.68E-05	6.09E-05
LA142	1.20E-10	5.31E-11	1.32E-11	NO DATA	NO DATA	1.27E-06	1.50E-06
CE141	3.55E-06	2.37E-06	2.71E-07	NO DATA	1.11E-06	7.67E-05	1.58E-05
CE143	3.32E-08	2.42E-08	2.70E-09	NO DATA	1.08E-08	1.63E-05	3.19E-05
CE144	6.11E-04	2.53E-04	3.28E-05	NO DATA	1.51E-04	1.67E-03	1.08E-04
PR143	1.67E-06	6.64E-07	8.28E-08	NO DATA	3.86E-07	6.04E-05	2.67E-05
PR144	5.37E-12	2.20E-12	2.72E-13	NO DATA	1.26E-12	2.19E-07	2.94E-14
ND147	9.83E-07	1.07E-06	6.41E-08	NO DATA	6.28E-07	4.65E-05	2.28E-05
W 187	1.50E-09	1.22E-09	4.29E-10	NO DATA	NO DATA	5.92E-06	2.21E-05
NP239	4.23E-08	3.99E-09	2.21E-09	NO DATA	1.75E-08	8.11E-06	1.65E-05

Table 3.2-8
Inhalation Dose Factors for Child (mrem/pCi inhaled)

NUCLIDE	BONE	LIVER	WHOLE BODY	THYROID	KIDNEY	LUNG	GI-LLI
H 3	NO DATA	3.04E-07	3.04E-07	3.04E-07	3.04E-07	3.04E-07	3.04E-07
C 14	9.70E-06	1.82E-06	1.82E-06	1.82E-06	1.82E-06	1.82E-06	1.82E-06
NA 24	4.35E-06	4.35E-06	4.35E-06	4.35E-06	4.35E-06	4.35E-06	4.35E-06
P 32	7.04E-04	3.09E-05	2.67E-05	NO DATA	NO DATA	NO DATA	1.14E-05
CR 51	NO DATA	NO DATA	4.17E-08	2.31E-08	6.57E-09	4.59E-06	2.93E-07
MN 54	NO DATA	1.16E-05	2.57E-06	NO DATA	2.71E-06	4.26E-04	6.19E-06
MN 56	NO DATA	4.48E-10	8.43E-11	NO DATA	4.52E-10	3.55E-06	3.33E-05
FE 55	1.28E-05	6.80E-06	2.10E-06	NO DATA	NO DATA	3.00E-05	7.75E-07
FE 59	5.59E-06	9.04E-06	4.51E-06	NO DATA	NO DATA	3.43E-04	1.91E-05
CO 58	NO DATA	4.70E-07	8.55E-07	NO DATA	NO DATA	2.99E-04	9.29E-06
CO 60	NO DATA	3.55E-06	6.12E-06	NO DATA	NO DATA	1.91E-03	2.60E-05
NI 63	2.22E-04	1.25E-05	7.56E-06	NO DATA	NO DATA	7.43E-05	1.71E-06
NI 65	8.08E-10	7.99E-11	4.44E-11	NO DATA	NO DATA	2.21E-06	2.27E-05
CU 64	NO DATA	5.39E-10	2.90E-10	NO DATA	1.63E-09	2.59E-06	9.92E-06
ZN 65	1.15E-05	3.06E-05	1.90E-05	NO DATA	1.93E-05	2.69E-04	4.41E-06
ZN 69	1.81E-11	2.61E-11	2.41E-12	NO DATA	1.58E-11	3.84E-07	2.75E-06
BR 83	NO DATA	NO DATA	1.28E-07	NO DATA	NO DATA	NO DATA	LT E-24
BR 84	NO DATA	NO DATA	1.48E-07	NO DATA	NO DATA	NO DATA	LT E-24
BR 85	NO DATA	NO DATA	6.84E-09	NO DATA	NO DATA	NO DATA	LT E-24
RB 86	NO DATA	5.36E-05	3.09E-05	NO DATA	NO DATA	NO DATA	2.16E-06
RB 88	NO DATA	1.52E-07	9.90E-08	NO DATA	NO DATA	NO DATA	4.66E-09
RB 89	NO DATA	9.33E-08	7.83E-08	NO DATA	NO DATA	NO DATA	5.11E-10
SR 89	1.62E-04	NO DATA	4.66E-06	NO DATA	NO DATA	5.83E-04	4.52E-05
SR 90	2.73E-02	NO DATA	1.74E-03	NO DATA	NO DATA	3.99E-03	9.28E-05
SR 91	3.28E-08	NO DATA	1.24E-09	NO DATA	NO DATA	1.44E-05	4.70E-05
SR 92	3.54E-09	NO DATA	1.42E-10	NO DATA	NO DATA	6.49E-06	6.55E-05
Y 90	1.11E-06	NO DATA	2.99E-08	NO DATA	NO DATA	7.07E-05	7.24E-05
Y 91M	1.37E-10	NO DATA	4.98E-12	NO DATA	NO DATA	7.60E-07	4.64E-07
Y 91	2.47E-04	NO DATA	6.59E-06	NO DATA	NO DATA	7.10E-04	4.97E-05
Y 92	5.50E-09	NO DATA	1.57E-10	NO DATA	NO DATA	6.46E-06	6.46E-05
Y 93	5.04E-08	NO DATA	1.38E-09	NO DATA	NO DATA	2.01E-05	1.05E-04
ZR 95	5.13E-05	1.13E-05	1.00E-05	NO DATA	1.61E-05	6.03E-04	1.65E-05
ZR 97	5.07E-08	7.34E-09	4.32E-09	NO DATA	1.05E-08	3.06E-05	9.49E-05
NB 95	6.35E-06	2.48E-06	1.77E-06	NO DATA	2.33E-06	1.66E-04	1.00E-05
MO 99	NO DATA	4.66E-08	1.15E-08	NO DATA	1.06E-07	3.66E-05	3.42E-05
TC 99M	4.81E-13	9.41E-13	1.56E-11	NO DATA	1.37E-11	2.57E-07	1.30E-06

Table 3.2-8 (Cont.)
Inhalation Dose Factors for Child (mrem/pCi inhaled)

NUCLIDE	BONE	LIVER	WHOLE BODY	THYROID	KIDNEY	LUNG	GI-LLI
TC101	2.19E-14	2.30E-14	2.91E-13	NO DATA	3.92E-13	1.58E-07	4.41E-09
RU103	7.55E-07	NO DATA	2.90E-07	NO DATA	1.90E-06	1.79E-04	1.21E-05
RU105	4.13E-10	NO DATA	1.50E-10	NO DATA	3.63E-10	4.30E-06	2.69E-05
RU106	3.68E-05	NO DATA	4.57E-06	NO DATA	4.97E-05	3.87E-03	1.16E-04
AG110M	4.56E-06	3.08E-06	2.47E-06	NO DATA	5.74E-06	1.48E-03	2.71E-05
TE125M	1.82E-06	6.29E-07	2.47E-07	5.20E-07	NO DATA	1.29E-04	9.13E-06
TE127M	6.72E-06	2.31E-06	8.18E-07	1.64E-06	1.72E-05	4.00E-04	1.93E-05
TE127	7.49E-10	2.57E-10	1.65E-10	5.30E-10	1.91E-09	2.71E-06	1.52E-05
TE129M	5.19E-06	1.85E-06	8.22E-07	1.71E-06	1.36E-05	4.76E-04	4.91E-05
TE129	2.64E-11	9.45E-12	6.44E-12	1.93E-11	6.94E-11	7.93E-07	6.89E-06
TE131M	3.63E-08	1.60E-08	1.37E-08	2.64E-08	1.08E-07	5.56E-05	8.32E-05
TE131	5.87E-12	2.28E-12	1.78E-12	4.59E-12	1.59E-11	5.55E-07	3.60E-07
TE132	1.30E-07	7.36E-08	7.12E-08	8.58E-08	4.79E-07	1.02E-04	3.72E-05
I 130	2.21E-06	4.43E-06	2.28E-06	4.99E-04	6.61E-06	NO DATA	1.38E-06
I 131	1.30E-05	1.30E-05	7.37E-06	4.39E-03	2.13E-05	NO DATA	7.68E-07
I 132	5.72E-07	1.10E-06	5.07E-07	5.23E-05	1.69E-06	NO DATA	8.65E-07
I 133	4.48E-06	5.49E-06	2.08E-06	1.04E-03	9.13E-06	NO DATA	1.48E-06
I 134	3.17E-07	5.84E-07	2.09E-07	1.37E-05	8.92E-07	NO DATA	2.58E-07
I 135	1.33E-06	2.36E-06	1.12E-06	2.14E-04	3.62E-06	NO DATA	1.20E-06
CS134	1.76E-04	2.74E-04	6.07E-05	NO DATA	8.93E-05	3.27E-05	1.04E-06
CS136	1.76E-05	4.62E-05	3.14E-05	NO DATA	2.58E-05	3.93E-06	1.13E-06
CS137	2.45E-04	2.23E-04	3.47E-05	NO DATA	7.63E-05	2.81E-05	9.78E-07
CS138	1.71E-07	2.27E-07	1.50E-07	NO DATA	1.68E-07	1.84E-08	7.29E-08
BA139	4.98E-10	2.66E-13	1.45E-11	NO DATA	2.33E-13	1.56E-06	1.56E-05
BA140	2.00E-05	1.75E-08	1.17E-06	NO DATA	5.71E-09	4.71E-04	2.75E-05
BA141	5.29E-11	2.95E-14	1.72E-12	NO DATA	2.56E-14	7.89E-07	7.44E-08
BA142	1.35E-11	2.73E-15	7.54E-13	NO DATA	7.87E-15	4.44E-07	7.41E-10
LA140	1.74E-07	6.08E-08	2.04E-08	NO DATA	NO DATA	4.94E-05	6.10E-05
LA142	3.50E-10	1.11E-10	3.49E-11	NO DATA	NO DATA	2.35E-06	2.05E-05
CE141	1.06E-05	5.28E-06	7.83E-07	NO DATA	2.31E-06	1.47E-05	1.53E-05
CE143	9.89E-08	5.37E-08	7.77E-09	NO DATA	2.26E-08	3.12E-05	3.44E-05
CE144	1.83E-03	5.72E-04	9.77E-05	NO DATA	3.17E-04	3.23E-03	1.05E-04
PR143	4.99E-06	1.50E-06	2.47E-07	NO DATA	8.11E-07	1.17E-04	2.63E-05
PR144	1.61E-11	4.99E-12	8.10E-13	NO DATA	2.64E-12	4.23E-07	5.32E-08
ND147	2.92E-06	2.36E-06	1.84E-07	NO DATA	1.30E-06	8.87E-05	2.22E-05
W 187	4.41E-09	2.61E-09	1.17E-09	NO DATA	NO DATA	1.11E-05	2.46E-05
NP239	1.26E-07	9.04E-09	6.35E-09	NO DATA	2.63E-08	1.57E-05	1.73E-05

Table 3.2-9
Inhalation Dose Factors for Infant (mrem/pCi inhaled)

NUCLIDE	BONE	LIVER	WHOLE BODY	THYROID	KIDNEY	LUNG	GI-LLI
H 3	NO DATA	4.62E-07	4.62E-07	4.62E-07	4.62E-07	4.62E-07	4.62E-07
C 14	1.89E-05	3.79E-06	3.79E-06	3.79E-06	3.79E-06	3.79E-06	3.79E-06
NA 24	7.54E-06	7.54E-06	7.54E-06	7.54E-06	7.54E-06	7.54E-06	7.54E-06
P 32	1.45E-03	8.03E-05	5.53E-05	NO DATA	NO DATA	NO DATA	1.15E-05
CR 51	NO DATA	NO DATA	6.37E-08	4.11E-08	9.45E-09	9.17E-06	2.55E-07
MN 54	NO DATA	1.81E-05	3.56E-06	NO DATA	3.56E-06	7.14E-04	5.04E-06
MN 56	NO DATA	1.10E-09	1.58E-10	NO DATA	7.86E-10	8.95E-06	5.12E-05
FE 55	1.41E-05	8.39E-06	2.38E-06	NO DATA	NO DATA	6.21E-05	7.82E-07
FE 59	9.69E-06	1.68E-05	6.77E-06	NO DATA	NO DATA	7.25E-04	1.77E-05
CO 58	NO DATA	8.71E-07	1.30E-06	NO DATA	NO DATA	5.55E-04	7.95E-06
CO 60	NO DATA	5.73E-06	8.41E-06	NO DATA	NO DATA	3.22E-03	2.28E-05
NI 63	2.42E-04	1.46E-05	8.29E-06	NO DATA	NO DATA	1.49E-04	1.73E-06
NI 65	1.71E-09	2.03E-10	8.79E-11	NO DATA	NO DATA	5.80E-06	3.58E-05
CU 64	NO DATA	1.34E-09	5.53E-10	NO DATA	2.84E-09	6.64E-06	1.07E-05
ZN 65	1.38E-05	4.47E-05	2.22E-05	NO DATA	2.32E-05	4.62E-04	3.67E-05
ZN 69	3.85E-11	6.91E-11	5.13E-12	NO DATA	2.87E-11	1.05E-06	9.44E-06
BR 83	NO DATA	NO DATA	2.72E-07	NO DATA	NO DATA	NO DATA	LT E-24
BR 84	NO DATA	NO DATA	2.86E-07	NO DATA	NO DATA	NO DATA	LT E-24
BR 85	NO DATA	NO DATA	1.46E-08	NO DATA	NO DATA	NO DATA	LT E-24
RB 86	NO DATA	1.36E-04	6.30E-05	NO DATA	NO DATA	NO DATA	2.17E-06
RB 88	NO DATA	3.98E-07	2.03E-07	NO DATA	NO DATA	NO DATA	2.42E-07
RB 89	NO DATA	2.29E-07	1.47E-07	NO DATA	NO DATA	NO DATA	4.87E-08
SR 89	2.84E-04	NO DATA	8.15E-06	NO DATA	NO DATA	1.45E-03	4.57E-05
SR 90	2.92E-02	NO DATA	1.85E-03	NO DATA	NO DATA	8.03E-03	9.36E-05
SR 91	6.83E-08	NO DATA	2.47E-09	NO DATA	NO DATA	3.76E-05	5.24E-05
SR 92	7.50E-09	NO DATA	2.79E-10	NO DATA	NO DATA	1.70E-05	1.00E-04
Y 90	2.35E-06	NO DATA	6.30E-08	NO DATA	NO DATA	1.92E-04	7.43E-05
Y 91M	2.91E-10	NO DATA	9.90E-12	NO DATA	NO DATA	1.99E-06	1.68E-06
Y 91	4.20E-04	NO DATA	1.12E-05	NO DATA	NO DATA	1.75E-03	5.02E-05
Y 92	1.17E-08	NO DATA	3.29E-10	NO DATA	NO DATA	1.75E-05	9.04E-05
Y 93	1.07E-07	NO DATA	2.91E-09	NO DATA	NO DATA	5.46E-05	1.19E-04
ZR 95	8.24E-05	1.99E-05	1.45E-06	NO DATA	2.22E-05	1.25E-03	1.55E-05
ZR 97	1.07E-07	1.83E-08	8.36E-09	NO DATA	1.85E-08	7.88E-05	1.00E-04
NB 95	1.12E-05	4.59E-06	2.70E-06	NO DATA	3.37E-06	3.42E-04	9.05E-06
MO 99	NO DATA	1.18E-07	2.31E-08	NO DATA	1.89E-07	9.63E-05	3.48E-05
TC 99M	9.98E-13	2.06E-12	2.66E-11	NO DATA	2.22E-11	5.79E-07	1.45E-06

Table 3.2-9 (Cont.)
Inhalation Dose Factors for Infant (mrem/pCi inhaled)

NUCLIDE	BONE	LIVER	WHOLE BODY	THYROID	KIDNEY	LUNG	GI-LLI
TC101	4.65E-14	5.58E-14	5.80E-13	NO DATA	6.99E-13	4.17E-07	6.03E-07
RU103	1.44E-06	NO DATA	4.85E-07	NO DATA	3.03E-06	3.94E-04	1.15E-05
RU105	8.74E-10	NO DATA	2.93E-10	NO DATA	6.42E-10	1.12E-05	3.46E-05
RU106	6.20E-05	NO DATA	7.77E-06	NO DATA	7.61E-05	8.26E-03	1.17E-04
AG110M	7.13E-06	5.16E-06	3.57E-06	NO DATA	7.80E-06	2.62E-03	2.36E-05
TE125M	3.40E-06	1.42E-06	4.70E-07	1.16E-06	NO DATA	3.19E-04	9.22E-06
TE127M	1.19E-05	4.93E-06	1.48E-06	3.48E-06	2.68E-05	9.37E-04	1.95E-05
TE127	1.59E-09	6.81E-10	3.49E-10	1.32E-09	3.47E-09	7.39E-06	1.74E-05
TE129M	1.01E-05	4.35E-06	1.59E-06	3.91E-06	2.27E-05	1.20E-03	4.93E-05
TE129	5.63E-11	2.48E-11	1.34E-11	4.82E-11	1.25E-10	2.14E-06	1.88E-05
TE131M	7.62E-08	3.93E-08	2.59E-08	6.38E-08	1.89E-07	1.42E-04	8.51E-05
TE131	1.24E-11	5.87E-12	3.57E-12	1.13E-11	2.85E-11	1.47E-06	5.87E-06
TE132	2.66E-07	1.69E-07	1.26E-07	1.99E-07	7.39E-07	2.43E-04	3.15E-05
I 130	4.54E-06	9.91E-06	3.98E-06	1.14E-03	1.09E-05	NO DATA	1.42E-06
I 131	1.71E-05	3.17E-05	1.40E-05	1.06E-02	3.70E-05	NO DATA	7.56E-07
I 132	1.21E-06	2.53E-06	8.99E-07	1.21E-04	2.82E-06	NO DATA	1.36E-06
I 133	9.46E-06	1.37E-05	4.00E-06	2.54E-03	1.60E-05	NO DATA	1.54E-06
I 134	6.58E-07	1.34E-06	4.75E-07	3.18E-05	1.49E-06	NO DATA	9.21E-07
I 135	2.76E-06	5.43E-06	1.98E-06	4.97E-04	6.05E-06	NO DATA	1.31E-06
CS134	2.83E-04	5.02E-04	5.32E-05	NO DATA	1.36E-04	5.69E-05	9.53E-07
CS136	3.45E-05	9.61E-05	3.78E-05	NO DATA	4.03E-05	8.40E-06	1.02E-06
CS137	3.92E-04	4.37E-04	3.25E-05	NO DATA	1.23E-04	5.09E-05	9.53E-07
CS138	3.61E-07	5.58E-07	2.84E-07	NO DATA	2.93E-07	4.67E-08	6.26E-07
BA139	1.06E-09	7.03E-13	3.07E-11	NO DATA	4.23E-13	4.25E-06	3.64E-05
BA140	4.00E-05	4.00E-08	2.07E-06	NO DATA	9.59E-09	1.14E-03	2.74E-05
BA141	1.12E-10	7.70E-14	3.55E-12	NO DATA	4.64E-14	2.12E-06	3.39E-06
BA142	2.84E-11	2.36E-14	1.40E-12	NO DATA	1.36E-14	1.11E-06	4.95E-07
LA140	3.61E-07	1.43E-07	3.68E-08	NO DATA	NO DATA	1.20E-04	6.06E-05
LA142	7.36E-10	2.69E-10	3.46E-11	NO DATA	NO DATA	5.87E-06	4.25E-05
CE141	1.98E-05	1.19E-05	1.42E-06	NO DATA	3.75E-06	3.69E-04	1.54E-05
CE143	2.09E-07	1.38E-07	1.58E-08	NO DATA	4.03E-08	8.30E-05	3.55E-05
CE144	2.28E-03	8.65E-04	1.26E-04	NO DATA	3.84E-04	7.03E-03	1.06E-04
PR143	1.00E-05	3.74E-06	4.99E-07	NO DATA	1.41E-06	3.09E-04	2.66E-05
PR144	3.42E-11	1.32E-11	1.72E-12	NO DATA	4.80E-12	1.15E-06	3.06E-06
ND147	5.67E-06	5.81E-06	3.57E-07	NO DATA	2.25E-06	2.30E-04	2.23E-05
W 187	9.26E-09	6.44E-09	2.23E-09	NO DATA	NO DATA	2.83E-05	2.54E-05
NP239	2.65E-07	2.37E-08	1.34E-08	NO DATA	4.73E-08	4.25E-05	1.78E-05

Table 3.2-10
Ingestion Dose Factors for Adult (mrem/pCi ingested)

ISOTOPE	BONE	LIVER	WHOLE BODY	THYROID	KIDNEY	LUNG	GI-LLI
H3	0.00E+00	1.05E-07	1.05E-07	1.05E-07	1.05E-07	1.05E-07	1.05E-07
C14	2.84E-06	5.68E-07	5.68E-07	5.68E-07	5.68E-07	5.68E-07	5.68E-07
NA24	1.70E-06	1.70E-06	1.70E-06	1.70E-06	1.70E-06	1.70E-06	1.70E-06
P32	1.93E-04	1.20E-05	7.46E-06	0.00E+00	0.00E+00	0.00E+00	2.17E-05
CR51	0.00E+00	0.00E+00	2.66E-09	1.59E-09	5.86E-10	3.53E-09	6.69E-07
MN54	0.00E+00	4.57E-06	8.72E-07	0.00E+00	1.36E-06	0.00E+00	1.40E-05
MN56	0.00E+00	1.15E-07	2.04E-08	0.00E+00	1.46E-07	0.00E+00	3.67E-06
FE55	2.75E-06	1.90E-06	4.43E-07	0.00E+00	0.00E+00	1.06E-06	1.09E-06
FE59	4.34E-06	1.02E-05	3.91E-06	0.00E+00	0.00E+00	2.85E-06	3.40E-05
CO58	0.00E+00	7.45E-07	1.67E-06	0.00E+00	0.00E+00	0.00E+00	1.51E-05
CO60	0.00E+00	2.14E-06	4.72E-06	0.00E+00	0.00E+00	0.00E+00	4.02E-05
NI63	1.30E-04	9.01E-06	4.36E-06	0.00E+00	0.00E+00	0.00E+00	1.88E-06
NI65	5.28E-07	6.86E-08	3.13E-08	0.00E+00	0.00E+00	0.00E+00	1.74E-06
CU64	0.00E+00	8.33E-08	3.91E-08	0.00E+00	2.10E-07	0.00E+00	7.10E-06
ZN65	4.84E-06	1.54E-05	6.96E-06	0.00E+00	1.03E-05	0.00E+00	9.70E-06
ZN69	1.03E-08	1.97E-08	1.37E-09	0.00E+00	1.28E-08	0.00E+00	2.96E-09
BR83	0.00E+00	0.00E+00	4.02E-08	0.00E+00	0.00E+00	0.00E+00	5.79E-08
BR84	0.00E+00	0.00E+00	5.21E-08	0.00E+00	0.00E+00	0.00E+00	4.09E-13
BR85	0.00E+00	0.00E+00	2.14E-09	0.00E+00	0.00E+00	0.00E+00	0.00E+00
RB86	0.00E+00	2.11E-05	9.83E-06	0.00E+00	0.00E+00	0.00E+00	4.16E-06
RB88	0.00E+00	6.05E-08	3.21E-08	0.00E+00	0.00E+00	0.00E+00	8.36E-19
RB89	0.00E+00	4.01E-08	2.82E-08	0.00E+00	0.00E+00	0.00E+00	2.33E-21
SR89	3.08E-04	0.00E+00	8.84E-06	0.00E+00	0.00E+00	0.00E+00	4.94E-05
SR90	7.58E-03	0.00E+00	1.86E-03	0.00E+00	0.00E+00	0.00E+00	2.19E-04
SR91	5.67E-06	0.00E+00	2.29E-07	0.00E+00	0.00E+00	0.00E+00	2.70E-05
SR92	2.15E-06	0.00E+00	9.30E-08	0.00E+00	0.00E+00	0.00E+00	4.26E-05
Y90	9.62E-09	0.00E+00	2.58E-10	0.00E+00	0.00E+00	0.00E+00	1.02E-04
Y91M	9.09E-11	0.00E+00	3.52E-12	0.00E+00	0.00E+00	0.00E+00	2.67E-10
Y91	1.41E-07	0.00E+00	3.77E-09	0.00E+00	0.00E+00	0.00E+00	7.67E-05
Y92	8.45E-10	0.00E+00	2.47E-11	0.00E+00	0.00E+00	0.00E+00	1.48E-05
Y93	2.68E-09	0.00E+00	7.40E-11	0.00E+00	0.00E+00	0.00E+00	8.50E-05
ZR95	3.04E-08	9.75E-09	6.60E-09	0.00E+00	1.53E-08	0.00E+00	3.09E-05
ZR97	1.68E-09	3.39E-10	1.55E-10	0.00E+00	5.12E-10	0.00E+00	1.05E-04
NB95	6.22E-09	3.46E-09	1.86E-09	0.00E+00	3.42E-09	0.00E+00	2.10E-05
MO99	0.00E+00	4.31E-06	8.20E-07	0.00E+00	9.76E-06	0.00E+00	9.99E-06
TC99M	2.47E-10	6.98E-10	8.89E-09	0.00E+00	1.06E-08	3.42E-10	4.13E-07

Table 3.2-10 (Cont.)
Ingestion Dose Factors for Adult (mrem/pCi ingested)

ISOTOPE	BONE	LIVER	WHOLE BODY	THYROID	KIDNEY	LUNG	GI-LLI
TC101	2.54E-10	3.66E-10	3.59E-09	0.00E+00	6.59E-09	1.87E-10	1.10E-21
RU103	1.85E-07	0.00E+00	7.97E-08	0.00E+00	7.06E-07	0.00E+00	2.16E-05
RU105	1.54E-08	0.00E+00	6.08E-09	0.00E+00	1.99E-07	0.00E+00	9.42E-06
RU106	2.75E-06	0.00E+00	3.48E-07	0.00E+00	5.31E-06	0.00E+00	1.78E-04
AG110M	1.60E-07	1.48E-07	8.79E-08	0.00E+00	2.91E-07	0.00E+00	6.04E-05
TE125M	2.68E-06	9.17E-07	3.59E-07	8.06E-07	1.09E-05	0.00E+00	1.07E-05
TE127M	6.77E-06	2.42E-06	8.25E-07	1.73E-06	2.75E-05	0.00E+00	2.27E-05
TE127	1.10E-07	3.95E-08	2.38E-08	8.15E-08	4.48E-07	0.00E+00	8.68E-06
TE129M	1.15E-05	4.29E-06	1.82E-06	3.95E-06	4.80E-05	0.00E+00	5.79E-05
TE129	3.14E-08	1.18E-08	7.65E-09	2.41E-08	1.32E-07	0.00E+00	2.37E-08
TE131M	1.73E-06	8.46E-07	7.05E-07	1.34E-06	8.57E-06	0.00E+00	8.40E-05
TE131	1.97E-08	8.23E-09	6.22E-09	1.62E-08	8.63E-08	0.00E+00	2.79E-09
TE132	2.52E-06	1.63E-06	1.53E-06	1.80E-06	1.57E-05	0.00E+00	7.71E-05
I130	7.56E-07	2.23E-06	8.80E-07	1.89E-04	3.48E-06	0.00E+00	1.92E-06
I131	4.16E-06	5.95E-06	3.41E-06	1.95E-03	1.02E-05	0.00E+00	1.57E-06
I132	2.03E-07	5.43E-07	1.90E-07	1.90E-05	8.65E-07	0.00E+00	1.02E-07
I133	1.42E-06	2.47E-06	7.53E-07	3.63E-04	4.31E-06	0.00E+00	2.22E-06
I134	1.06E-07	2.88E-07	1.03E-07	4.99E-06	4.58E-07	0.00E+00	2.51E-10
I135	4.43E-07	1.16E-06	4.28E-07	7.65E-05	1.86E-06	0.00E+00	1.31E-06
CS134	6.22E-05	1.48E-04	1.21E-04	0.00E+00	4.79E-05	1.59E-05	2.59E-06
CS136	6.51E-06	2.57E-05	1.85E-05	0.00E+00	1.43E-05	1.96E-06	2.92E-06
CS137	7.97E-05	1.09E-04	7.14E-05	0.00E+00	3.70E-05	1.23E-05	2.11E-06
CS138	5.52E-08	1.09E-07	5.40E-08	0.00E+00	8.01E-08	7.91E-09	4.65E-13
BA139	9.70E-08	6.91E-11	2.84E-09	0.00E+00	6.46E-11	3.92E-11	1.72E-07
BA140	2.03E-05	2.55E-08	1.33E-06	0.00E+00	8.67E-09	1.46E-08	4.18E-05
BA141	4.71E-08	3.56E-11	1.59E-09	0.00E+00	3.31E-11	2.02E-11	2.22E-17
BA142	2.13E-08	2.19E-11	1.34E-09	0.00E+00	1.85E-11	1.24E-11	3.00E-26
LA140	2.50E-09	1.26E-09	3.33E-10	0.00E+00	0.00E+00	0.00E+00	9.25E-05
LA142	1.28E-10	5.82E-11	1.45E-11	0.00E+00	0.00E+00	0.00E+00	4.25E-07
CE141	9.36E-09	6.33E-09	7.18E-10	0.00E+00	2.94E-09	0.00E+00	2.42E-05
CE143	1.65E-09	1.22E-06	1.35E-10	0.00E+00	5.37E-10	0.00E+00	4.56E-05
CE144	4.88E-07	2.04E-07	2.62E-08	0.00E+00	1.21E-07	0.00E+00	1.65E-04
PR143	9.20E-09	3.69E-09	4.56E-10	0.00E+00	2.13E-09	0.00E+00	4.03E-05
PR144	3.01E-11	1.25E-11	1.53E-12	0.00E+00	7.05E-12	0.00E+00	4.33E-18
ND147	6.29E-09	7.27E-09	4.35E-10	0.00E+00	4.25E-09	0.00E+00	3.49E-05
W187	1.03E-07	8.61E-08	3.01E-08	0.00E+00	0.00E+00	0.00E+00	2.82E-05
NP239	1.19E-09	1.17E-10	6.45E-11	0.00E+00	3.65E-10	0.00E+00	2.40E-05

Table 3.2-11
Ingestion Dose Factors for Teenager (mrem/pCi ingested)

ISOTOPE	BONE	LIVER	WHOLE BODY	THYROID	KIDNEY	LUNG	GI-LLI
H3	0.00E+00	1.06E-07	1.06E-07	1.06E-07	1.06E-07	1.06E-07	1.06E-07
C14	4.06E-06	8.12E-07	8.12E-07	8.12E-07	8.12E-07	8.12E-07	8.12E-07
NA24	2.30E-06	2.30E-06	2.30E-06	2.30E-06	2.30E-06	2.30E-06	2.30E-06
P32	2.76E-04	1.71E-05	1.07E-05	0.00E+00	0.00E+00	0.00E+00	2.32E-05
CR51	0.00E+00	0.00E+00	3.60E-09	2.00E-09	7.89E-10	5.14E-09	6.05E-07
MN54	0.00E+00	5.90E-06	1.17E-06	0.00E+00	1.76E-06	0.00E+00	1.21E-05
MN56	0.00E+00	1.58E-07	2.81E-08	0.00E+00	2.00E-07	0.00E+00	1.04E-05
FE55	3.78E-06	2.68E-06	6.25E-07	0.00E+00	0.00E+00	1.70E-06	1.16E-06
FE59	5.87E-06	1.37E-05	5.29E-06	0.00E+00	0.00E+00	4.32E-06	3.24E-05
CO58	0.00E+00	9.72E-07	2.24E-06	0.00E+00	0.00E+00	0.00E+00	1.34E-05
CO60	0.00E+00	2.81E-06	6.33E-06	0.00E+00	0.00E+00	0.00E+00	3.66E-05
NI63	1.77E-04	1.25E-05	6.00E-06	0.00E+00	0.00E+00	0.00E+00	1.99E-06
NI65	7.49E-07	9.57E-08	4.36E-08	0.00E+00	0.00E+00	0.00E+00	5.19E-06
CU64	0.00E+00	1.15E-07	5.41E-08	0.00E+00	2.91E-07	0.00E+00	8.92E-06
ZN65	5.76E-06	2.00E-05	9.33E-06	0.00E+00	1.28E-05	0.00E+00	8.47E-06
ZN69	1.47E-08	2.80E-08	1.96E-09	0.00E+00	1.83E-08	0.00E+00	5.16E-08
BR83	0.00E+00	0.00E+00	5.74E-08	0.00E+00	0.00E+00	0.00E+00	0.00E+00
BR84	0.00E+00	0.00E+00	7.22E-08	0.00E+00	0.00E+00	0.00E+00	0.00E+00
BR85	0.00E+00	0.00E+00	3.05E-09	0.00E+00	0.00E+00	0.00E+00	0.00E+00
RB86	0.00E+00	2.98E-05	1.40E-05	0.00E+00	0.00E+00	0.00E+00	4.41E-06
RB88	0.00E+00	8.52E-08	4.54E-08	0.00E+00	0.00E+00	0.00E+00	7.30E-15
RB89	0.00E+00	5.50E-08	3.89E-08	0.00E+00	0.00E+00	0.00E+00	8.43E-17
SR89	4.40E-04	0.00E+00	1.26E-05	0.00E+00	0.00E+00	0.00E+00	5.24E-05
SR90	8.30E-03	0.00E+00	2.05E-03	0.00E+00	0.00E+00	0.00E+00	2.33E-04
SR91	8.07E-06	0.00E+00	3.21E-07	0.00E+00	0.00E+00	0.00E+00	3.66E-05
SR92	3.05E-06	0.00E+00	1.30E-07	0.00E+00	0.00E+00	0.00E+00	7.77E-05
Y90	1.37E-08	0.00E+00	3.69E-10	0.00E+00	0.00E+00	0.00E+00	1.13E-04
Y91M	1.29E-10	0.00E+00	4.93E-12	0.00E+00	0.00E+00	0.00E+00	6.09E-09
Y91	2.01E-07	0.00E+00	5.39E-09	0.00E+00	0.00E+00	0.00E+00	8.24E-05
Y92	1.21E-09	0.00E+00	3.50E-11	0.00E+00	0.00E+00	0.00E+00	3.32E-05
Y93	3.83E-09	0.00E+00	1.05E-10	0.00E+00	0.00E+00	0.00E+00	1.17E-04
ZR95	4.12E-08	1.30E-08	8.94E-09	0.00E+00	1.91E-08	0.00E+00	3.00E-05
ZR97	2.37E-09	4.69E-10	2.16E-10	0.00E+00	7.11E-10	0.00E+00	1.27E-04
NB95	8.22E-09	4.56E-09	2.51E-09	0.00E+00	4.42E-09	0.00E+00	1.95E-05
MO99	0.00E+00	6.03E-06	1.15E-06	0.00E+00	1.38E-05	0.00E+00	1.08E-05
TC99M	3.32E-10	9.26E-10	1.20E-08	0.00E+00	1.38E-08	5.14E-10	6.08E-07

Table 3.2-11 (Cont.)
Ingestion Dose Factor for Teenager (mrem/pCi ingested)

ISOTOPE	BONE	LIVER	WHOLE BODY	THYROID	KIDNEY	LUNG	GI-LLI
TC101	3.60E-10	5.12E-10	5.03E-09	0.00E+00	9.26E-09	3.12E-10	8.75E-17
RU103	2.55E-07	0.00E+00	1.09E-07	0.00E+00	8.99E-07	0.00E+00	2.13E-05
RU105	2.18E-08	0.00E+00	8.46E-09	0.00E+00	2.75E-07	0.00E+00	1.76E-05
RU106	3.92E-06	0.00E+00	4.94E-07	0.00E+00	7.56E-06	0.00E+00	1.88E-04
AG110M	2.05E-07	1.94E-07	1.18E-07	0.00E+00	3.70E-07	0.00E+00	5.45E-05
TE125M	3.83E-06	1.38E-06	5.12E-07	1.07E-06	0.00E+00	0.00E+00	1.13E-05
TE127M	9.67E-06	3.43E-06	1.15E-06	2.30E-06	3.92E-05	0.00E+00	2.41E-05
TE127	1.58E-07	5.60E-08	3.40E-08	1.09E-07	6.40E-07	0.00E+00	1.22E-05
TE129M	1.63E-05	6.05E-06	2.58E-06	5.26E-06	6.82E-05	0.00E+00	6.12E-05
TE129	4.48E-08	1.67E-08	1.09E-08	3.20E-08	1.88E-07	0.00E+00	2.45E-07
TE131M	2.44E-06	1.17E-06	9.76E-07	1.76E-06	1.22E-05	0.00E+00	9.39E-05
TE131	2.79E-08	1.15E-08	8.72E-09	2.15E-08	1.22E-07	0.00E+00	2.29E-09
TE132	3.49E-06	2.21E-06	2.08E-06	2.33E-06	2.12E-05	0.00E+00	7.00E-05
I130	1.03E-06	2.98E-06	1.19E-06	2.43E-04	4.59E-06	0.00E+00	2.29E-06
I131	5.85E-06	8.19E-06	4.40E-06	2.39E-03	1.41E-05	0.00E+00	1.62E-06
I132	2.79E-07	7.30E-07	2.62E-07	2.46E-05	1.15E-06	0.00E+00	3.18E-07
I133	2.01E-06	3.41E-06	1.04E-06	4.76E-04	5.98E-06	0.00E+00	2.58E-06
I134	1.46E-07	3.87E-07	1.39E-07	6.45E-06	6.10E-07	0.00E+00	5.10E-09
I135	6.10E-07	1.57E-06	5.82E-07	1.01E-04	2.48E-06	0.00E+00	1.74E-06
CS134	8.37E-05	1.97E-04	9.14E-05	0.00E+00	6.26E-05	2.39E-05	2.45E-06
CS136	8.59E-06	3.38E-05	2.27E-05	0.00E+00	1.84E-05	2.90E-06	2.72E-06
CS137	1.12E-04	1.49E-04	5.19E-05	0.00E+00	5.07E-05	1.97E-05	2.12E-06
CS138	7.76E-08	1.49E-07	7.45E-08	0.00E+00	1.10E-07	1.28E-08	6.76E-11
BA139	1.39E-07	9.78E-11	4.05E-09	0.00E+00	9.22E-11	6.74E-11	1.24E-06
BA140	2.84E-05	3.48E-08	1.83E-06	0.00E+00	1.18E-08	2.34E-08	4.38E-05
BA141	6.71E-08	5.01E-11	2.24E-09	0.00E+00	4.65E-11	3.43E-11	1.43E-13
BA142	2.99E-08	2.99E-11	1.84E-09	0.00E+00	2.53E-11	1.99E-11	9.18E-20
LA140	3.48E-09	1.71E-09	4.55E-10	0.00E+00	0.00E+00	0.00E+00	9.82E-05
LA142	1.79E-10	7.95E-11	1.98E-11	0.00E+00	0.00E+00	0.00E+00	2.42E-06
CE141	1.33E-08	8.88E-09	1.02E-09	0.00E+00	4.18E-09	0.00E+00	2.54E-05
CE143	2.35E-09	1.71E-06	1.91E-10	0.00E+00	7.67E-10	0.00E+00	5.14E-05
CE144	6.96E-07	2.88E-07	3.74E-08	0.00E+00	1.72E-07	0.00E+00	1.75E-04
PR143	1.31E-08	5.23E-09	6.52E-10	0.00E+00	3.04E-09	0.00E+00	4.31E-05
PR144	4.30E-11	1.76E-11	2.18E-12	0.00E+00	1.01E-11	0.00E+00	4.74E-14
ND147	9.38E-09	1.02E-08	6.11E-10	0.00E+00	5.99E-09	0.00E+00	3.68E-05
W187	1.46E-07	1.19E-07	4.17E-08	0.00E+00	0.00E+00	0.00E+00	3.22E-05
NP239	1.76E-09	1.66E-10	9.22E-11	0.00E+00	5.21E-10	0.00E+00	2.67E-05

Table 3.2-12
Ingestion Dose Factors for Child (mrem/pCi ingested)

ISOTOPE	BONE	LIVER	WHOLE BODY	THYROID	KIDNEY	LUNG	GI-LLI
H3	0.00E+00	2.03E-07	2.03E-07	2.03E-07	2.03E-07	2.03E-07	2.03E-07
C14	1.21E-05	2.42E-06	2.42E-06	2.42E-06	2.42E-06	2.42E-06	2.42E-06
NA24	5.80E-06	5.80E-06	5.80E-06	5.80E-06	5.80E-06	5.80E-06	5.80E-06
P32	8.25E-04	3.86E-05	3.18E-05	0.00E+00	0.00E+00	0.00E+00	2.28E-05
CR51	0.00E+00	0.00E+00	8.90E-09	4.94E-09	1.35E-09	9.02E-09	4.72E-07
MN54	0.00E+00	1.07E-05	2.85E-06	0.00E+00	3.00E-06	0.00E+00	8.98E-06
MN56	0.00E+00	3.34E-07	7.54E-08	0.00E+00	4.04E-07	0.00E+00	4.84E-05
FE55	1.15E-05	6.10E-06	1.89E-06	0.00E+00	0.00E+00	3.45E-06	1.13E-06
FE59	1.65E-05	2.67E-05	1.33E-05	0.00E+00	0.00E+00	7.74E-06	2.78E-05
CO58	0.00E+00	1.80E-06	5.51E-06	0.00E+00	0.00E+00	0.00E+00	1.05E-05
CO60	0.00E+00	5.29E-06	1.56E-05	0.00E+00	0.00E+00	0.00E+00	2.93E-05
NI63	5.38E-04	2.88E-05	1.83E-05	0.00E+00	0.00E+00	0.00E+00	1.94E-06
NI65	2.22E-06	2.09E-07	1.22E-07	0.00E+00	0.00E+00	0.00E+00	2.56E-05
CU64	0.00E+00	2.45E-07	1.48E-07	0.00E+00	5.92E-07	0.00E+00	1.15E-05
ZN65	1.37E-05	3.65E-05	2.27E-05	0.00E+00	2.30E-05	0.00E+00	6.41E-06
ZN69	4.38E-08	6.33E-08	5.85E-09	0.00E+00	3.84E-08	0.00E+00	3.99E-06
BR83	0.00E+00	0.00E+00	1.71E-07	0.00E+00	0.00E+00	0.00E+00	0.00E+00
BR84	0.00E+00	0.00E+00	1.98E-07	0.00E+00	0.00E+00	0.00E+00	0.00E+00
BR85	0.00E+00	0.00E+00	9.12E-09	0.00E+00	0.00E+00	0.00E+00	0.00E+00
RB86	0.00E+00	6.70E-05	4.12E-05	0.00E+00	0.00E+00	0.00E+00	4.31E-06
RB88	0.00E+00	1.90E-07	1.32E-07	0.00E+00	0.00E+00	0.00E+00	9.32E-09
RB89	0.00E+00	1.17E-07	1.04E-07	0.00E+00	0.00E+00	0.00E+00	1.02E-09
SR89	1.32E-03	0.00E+00	3.77E-05	0.00E+00	0.00E+00	0.00E+00	5.11E-05
SR90	1.70E-02	0.00E+00	4.31E-03	0.00E+00	0.00E+00	0.00E+00	2.29E-04
SR91	2.40E-05	0.00E+00	9.06E-07	0.00E+00	0.00E+00	0.00E+00	5.30E-05
SR92	9.03E-06	0.00E+00	3.62E-07	0.00E+00	0.00E+00	0.00E+00	1.71E-04
Y90	4.11E-08	0.00E+00	1.10E-09	0.00E+00	0.00E+00	0.00E+00	1.17E-04
Y91M	3.82E-10	0.00E+00	1.39E-11	0.00E+00	0.00E+00	0.00E+00	7.48E-07
Y91	6.02E-07	0.00E+00	1.61E-08	0.00E+00	0.00E+00	0.00E+00	8.02E-05
Y92	3.60E-09	0.00E+00	1.03E-10	0.00E+00	0.00E+00	0.00E+00	1.04E-04
Y93	1.14E-08	0.00E+00	3.13E-10	0.00E+00	0.00E+00	0.00E+00	1.70E-04
ZR95	1.16E-07	2.55E-08	2.27E-08	0.00E+00	3.65E-08	0.00E+00	2.66E-05
ZR97	6.99E-09	1.01E-09	5.96E-10	0.00E+00	1.45E-09	0.00E+00	1.53E-04
NB95	2.25E-08	8.76E-09	6.26E-09	0.00E+00	8.23E-09	0.00E+00	1.62E-05
MO99	0.00E+00	1.33E-05	3.29E-06	0.00E+00	2.84E-05	0.00E+00	1.10E-05
TC99M	9.23E-10	1.81E-09	3.00E-08	0.00E+00	2.63E-08	9.19E-10	1.03E-06

Table 3.2-12 (Cont.)
Ingestion Dose Factors for Child (mrem/pCi ingested)

ISOTOPE	BONE	LIVER	WHOLE BODY	THYROID	KIDNEY	LUNG	GI-LLI
TC101	1.07E-09	1.12E-09	1.42E-08	0.00E+00	1.91E-08	5.92E-10	3.56E-09
RU103	7.31E-07	0.00E+00	2.81E-07	0.00E+00	1.84E-06	0.00E+00	1.89E-05
RU105	6.45E-08	0.00E+00	2.34E-08	0.00E+00	5.67E-07	0.00E+00	4.21E-05
RU106	1.17E-05	0.00E+00	1.46E-06	0.00E+00	1.58E-05	0.00E+00	1.82E-04
AG110M	5.39E-07	3.64E-07	2.91E-07	0.00E+00	6.78E-07	0.00E+00	4.33E-05
TE125M	1.14E-05	3.09E-06	1.52E-06	3.20E-06	0.00E+00	0.00E+00	1.10E-05
TE127M	2.89E-05	7.78E-06	3.43E-06	6.91E-06	8.24E-05	0.00E+00	2.34E-05
TE127	4.71E-07	1.27E-07	1.01E-07	3.26E-07	1.34E-06	0.00E+00	1.84E-05
TE129M	4.87E-05	1.36E-05	7.56E-06	1.57E-05	1.43E-04	0.00E+00	5.94E-05
TE129	1.34E-07	3.74E-08	3.18E-08	9.56E-08	3.92E-07	0.00E+00	8.34E-06
TE131M	7.20E-06	2.49E-06	2.65E-06	5.12E-06	2.41E-05	0.00E+00	1.01E-04
TE131	8.30E-08	2.53E-08	2.47E-08	6.35E-08	2.51E-07	0.00E+00	4.36E-07
TE132	1.01E-05	4.47E-06	5.40E-06	6.51E-06	4.15E-05	0.00E+00	4.50E-05
I130	2.92E-06	5.90E-06	3.04E-06	6.50E-04	8.82E-06	0.00E+00	2.76E-06
I131	1.72E-05	1.73E-05	9.83E-06	5.72E-03	2.84E-05	0.00E+00	1.54E-06
I132	8.00E-07	1.47E-06	6.76E-07	6.82E-05	2.25E-06	0.00E+00	1.73E-06
I133	5.92E-06	7.32E-06	2.77E-06	1.36E-03	1.22E-05	0.00E+00	2.95E-06
I134	4.19E-07	7.78E-07	3.58E-07	1.79E-05	1.19E-06	0.00E+00	5.16E-07
I135	1.75E-06	3.15E-06	1.49E-06	2.79E-04	4.83E-06	0.00E+00	2.40E-06
CS134	2.34E-04	3.84E-04	8.10E-05	0.00E+00	1.19E-04	4.27E-05	2.07E-06
CS136	2.35E-05	6.46E-05	4.18E-05	0.00E+00	3.44E-05	5.13E-06	2.27E-06
CS137	3.27E-04	3.13E-04	4.62E-05	0.00E+00	1.02E-04	3.67E-05	1.96E-06
CS138	2.28E-07	3.17E-07	2.01E-07	0.00E+00	2.23E-07	2.40E-08	1.46E-07
BA139	4.14E-07	2.21E-10	1.20E-08	0.00E+00	1.93E-10	1.30E-10	2.39E-05
BA140	8.31E-05	7.28E-08	4.85E-06	0.00E+00	2.37E-08	4.34E-08	4.21E-05
BA141	2.00E-07	1.12E-10	6.51E-09	0.00E+00	9.69E-11	6.58E-10	1.14E-07
BA142	8.74E-08	6.29E-11	4.88E-09	0.00E+00	5.09E-11	3.70E-11	1.14E-09
LA140	1.01E-08	3.53E-09	1.19E-09	0.00E+00	0.00E+00	0.00E+00	9.84E-05
LA142	5.24E-10	1.67E-10	5.23E-11	0.00E+00	0.00E+00	0.00E+00	3.31E-05
CE141	3.97E-08	1.98E-08	2.94E-09	0.00E+00	8.68E-09	0.00E+00	2.47E-05
CE143	6.99E-09	3.79E-06	5.49E-10	0.00E+00	1.59E-09	0.00E+00	5.55E-05
CE144	2.08E-06	6.52E-07	1.11E-07	0.00E+00	3.61E-07	0.00E+00	1.70E-04
PR143	3.93E-08	1.18E-08	1.95E-09	0.00E+00	6.39E-09	0.00E+00	4.24E-05
PR144	1.29E-10	3.99E-11	6.49E-12	0.00E+00	2.11E-11	0.00E+00	8.59E-08
ND147	2.79E-08	2.26E-08	1.75E-09	0.00E+00	1.24E-08	0.00E+00	3.58E-05
W187	4.29E-07	2.54E-07	1.14E-07	0.00E+00	0.00E+00	0.00E+00	3.57E-05
NP239	5.25E-09	3.77E-10	2.65E-10	0.00E+00	1.09E-09	0.00E+00	2.79E-05

Table 3.2-13
Ingestion Dose Factors for Infant (mrem/pCi ingested)

ISOTOPE	BONE	LIVER	WHOLE BODY	THYROID	KIDNEY	LUNG	GI-LLI
H3	0.00E+00	3.08E-07	3.08E-07	3.08E-07	3.08E-07	3.08E-07	3.08E-07
C14	2.37E-05	5.06E-06	5.06E-06	5.06E-06	5.06E-06	5.06E-06	5.06E-06
NA24	1.01E-05	1.01E-05	1.01E-05	1.01E-05	1.01E-05	1.01E-05	1.01E-05
P32	1.70E-03	1.00E-04	6.59E-05	0.00E+00	0.00E+00	0.00E+00	2.30E-05
CR51	0.00E+00	0.00E+00	1.41E-08	9.20E-09	2.01E-09	1.79E-08	4.11E-07
MN54	0.00E+00	1.99E-05	4.51E-06	0.00E+00	4.41E-06	0.00E+00	7.31E-06
MN56	0.00E+00	8.18E-07	1.41E-07	0.00E+00	7.03E-07	0.00E+00	7.43E-05
FE55	1.39E-05	8.98E-06	2.40E-06	0.00E+00	0.00E+00	4.39E-06	1.14E-06
FE59	3.08E-05	5.38E-05	2.12E-05	0.00E+00	0.00E+00	1.59E-05	2.57E-05
CO58	0.00E+00	3.60E-06	8.98E-06	0.00E+00	0.00E+00	0.00E+00	8.97E-06
CO60	0.00E+00	1.08E-05	2.55E-05	0.00E+00	0.00E+00	0.00E+00	2.57E-05
NI63	6.34E-04	3.92E-05	2.20E-05	0.00E+00	0.00E+00	0.00E+00	1.95E-06
NI65	4.70E-06	5.32E-07	2.42E-07	0.00E+00	0.00E+00	0.00E+00	4.05E-05
CU64	0.00E+00	6.09E-07	2.82E-07	0.00E+00	1.03E-06	0.00E+00	1.25E-05
ZN65	1.84E-05	6.31E-05	2.91E-05	0.00E+00	3.06E-05	0.00E+00	5.33E-05
ZN69	9.33E-08	1.68E-07	1.25E-08	0.00E+00	6.98E-08	0.00E+00	1.37E-05
BR83	0.00E+00	0.00E+00	3.63E-07	0.00E+00	0.00E+00	0.00E+00	0.00E+00
BR84	0.00E+00	0.00E+00	3.82E-07	0.00E+00	0.00E+00	0.00E+00	0.00E+00
BR85	0.00E+00	0.00E+00	1.94E-08	0.00E+00	0.00E+00	0.00E+00	0.00E+00
RB86	0.00E+00	1.70E-04	8.40E-05	0.00E+00	0.00E+00	0.00E+00	4.35E-06
RB88	0.00E+00	4.98E-07	2.73E-07	0.00E+00	0.00E+00	0.00E+00	4.85E-07
RB89	0.00E+00	2.86E-07	1.97E-07	0.00E+00	0.00E+00	0.00E+00	9.74E-08
SR89	2.51E-03	0.00E+00	7.20E-05	0.00E+00	0.00E+00	0.00E+00	5.16E-05
SR90	1.85E-02	0.00E+00	4.71E-03	0.00E+00	0.00E+00	0.00E+00	2.31E-04
SR91	5.00E-05	0.00E+00	1.81E-06	0.00E+00	0.00E+00	0.00E+00	5.92E-05
SR92	1.92E-05	0.00E+00	7.13E-07	0.00E+00	0.00E+00	0.00E+00	2.07E-04
Y90	8.69E-08	0.00E+00	2.33E-09	0.00E+00	0.00E+00	0.00E+00	1.20E-04
Y91M	8.10E-10	0.00E+00	2.76E-11	0.00E+00	0.00E+00	0.00E+00	2.70E-06
Y91	1.13E-06	0.00E+00	3.01E-08	0.00E+00	0.00E+00	0.00E+00	8.10E-05
Y92	7.65E-09	0.00E+00	2.15E-10	0.00E+00	0.00E+00	0.00E+00	1.46E-04
Y93	2.43E-08	0.00E+00	6.62E-10	0.00E+00	0.00E+00	0.00E+00	1.92E-04
ZR95	2.06E-07	5.02E-08	3.56E-08	0.00E+00	5.41E-08	0.00E+00	2.50E-05
ZR97	1.48E-08	2.54E-09	1.16E-09	0.00E+00	2.56E-09	0.00E+00	1.62E-04
NB95	4.20E-08	1.73E-08	1.00E-08	0.00E+00	1.24E-08	0.00E+00	1.46E-05
MO99	0.00E+00	3.40E-05	6.63E-06	0.00E+00	5.08E-05	0.00E+00	1.12E-05
TC99M	1.92E-09	3.96E-09	5.10E-08	0.00E+00	4.26E-08	2.07E-09	1.15E-06

Table 3.2-13 (Cont.)
Ingestion Dose Factors for Infant

ISOTOPE	BONE	LIVER	WHOLE BODY	THYROID	KIDNEY	LUNG	GI-LLI
TC101	2.27E-09	2.86E-09	2.83E-08	0.00E+00	3.40E-08	1.56E-09	4.86E-07
RU103	1.48E-06	0.00E+00	4.95E-07	0.00E+00	3.08E-06	0.00E+00	1.80E-05
RU105	1.36E-07	0.00E+00	4.58E-08	0.00E+00	1.00E-06	0.00E+00	5.41E-05
RU106	2.41E-05	0.00E+00	3.01E-06	0.00E+00	2.85E-05	0.00E+00	1.83E-04
AG110M	9.96E-07	7.27E-07	4.81E-07	0.00E+00	1.04E-06	0.00E+00	3.77E-05
TE125M	2.33E-05	7.79E-06	3.15E-06	7.84E-06	0.00E+00	0.00E+00	1.11E-05
TE127M	5.85E-05	1.94E-05	7.08E-06	1.69E-05	1.44E-04	0.00E+00	2.36E-05
TE127	1.00E-06	3.35E-07	2.15E-07	8.14E-07	2.44E-06	0.00E+00	2.10E-05
TE129M	1.00E-04	3.43E-05	1.54E-05	3.84E-05	2.50E-04	0.00E+00	5.97E-05
TE129	2.84E-07	9.79E-08	6.63E-08	2.38E-07	7.07E-07	0.00E+00	2.27E-05
TE131M	1.52E-05	6.12E-06	5.05E-06	1.24E-05	4.21E-05	0.00E+00	1.03E-04
TE131	1.76E-07	6.50E-08	4.94E-08	1.57E-07	4.50E-07	0.00E+00	7.11E-06
TE132	2.08E-05	1.03E-05	9.61E-06	1.52E-05	6.44E-05	0.00E+00	3.81E-05
I130	6.00E-06	1.32E-05	5.30E-06	1.48E-03	1.45E-05	0.00E+00	2.83E-06
I131	3.59E-05	4.23E-05	1.86E-05	1.39E-02	4.94E-05	0.00E+00	1.51E-06
I132	1.66E-06	3.37E-06	1.20E-06	1.58E-04	3.76E-06	0.00E+00	2.73E-06
I133	1.25E-05	1.82E-05	5.33E-06	3.31E-03	2.14E-05	0.00E+00	3.08E-06
I134	8.69E-07	1.78E-06	6.33E-07	4.15E-05	1.99E-06	0.00E+00	1.84E-06
I135	3.64E-06	7.24E-06	2.64E-06	6.49E-04	8.07E-06	0.00E+00	2.62E-06
CS134	3.77E-04	7.03E-04	7.10E-05	0.00E+00	1.81E-04	7.42E-05	1.91E-06
CS136	4.59E-05	1.35E-04	5.04E-05	0.00E+00	5.38E-05	1.10E-05	2.05E-06
CS137	5.22E-04	6.11E-04	4.33E-05	0.00E+00	1.64E-04	6.64E-05	1.91E-06
CS138	4.81E-07	7.82E-07	3.79E-07	0.00E+00	3.90E-07	6.09E-08	1.25E-06
BA139	8.81E-07	5.84E-10	2.55E-08	0.00E+00	3.51E-10	3.54E-10	5.58E-05
BA140	1.71E-04	1.71E-07	8.81E-06	0.00E+00	4.06E-08	1.05E-07	4.20E-05
BA141	4.25E-07	2.91E-10	1.34E-08	0.00E+00	1.75E-10	1.77E-10	5.19E-06
BA142	1.84E-07	1.53E-10	9.06E-09	0.00E+00	8.81E-11	9.26E-11	7.59E-07
LA140	2.11E-08	8.32E-09	2.14E-09	0.00E+00	0.00E+00	0.00E+00	9.77E-05
LA142	1.10E-09	4.04E-10	9.67E-11	0.00E+00	0.00E+00	0.00E+00	6.86E-05
CE141	7.87E-08	4.80E-08	5.65E-09	0.00E+00	1.48E-08	0.00E+00	2.48E-05
CE143	1.48E-08	9.82E-06	1.12E-09	0.00E+00	2.86E-09	0.00E+00	5.73E-05
CE144	2.98E-06	1.22E-06	1.67E-07	0.00E+00	4.93E-07	0.00E+00	1.71E-04
PR143	8.13E-08	3.04E-08	4.03E-09	0.00E+00	1.13E-08	0.00E+00	4.29E-05
PR144	2.74E-10	1.06E-10	1.38E-11	0.00E+00	3.84E-11	0.00E+00	4.93E-06
ND147	5.53E-08	5.68E-08	3.48E-09	0.00E+00	2.19E-08	0.00E+00	3.60E-05
W187	9.03E-07	6.28E-07	2.17E-07	0.00E+00	0.00E+00	0.00E+00	3.69E-05
NP239	1.11E-08	9.93E-10	5.61E-10	0.00E+00	1.98E-09	0.00E+00	2.87E-05

Table 3.2-14
Annual Usage Factors for the Maximum Exposed Individual

Pathway	Infant	Child	Teen	Adult
Fruits, vegetables & grain (kg/yr)*	--	520	630	520
Leafy vegetables (kg/yr)	--	26	42	64
Milk (L/yr)	330	330	400	310
Meat & poultry (kg/yr)	--	41	65	110
Inhalation (m^3/yr)	1400	3700	8000	8000

* Consists of the following (on a mass basis): 22% fruit, 54% vegetables (including leafy vegetables), and 24% grain.

Table 3.2-15
Annual Usage Factors for the Average Individual**

Pathway	Infant	Child	Teen	Adult
Fruits, vegetables & grain (kg/yr)*	--	200	240	190
Milk (L/yr)	--	170	200	110
Meat & poultry (kg/yr)	--	37	59	95
Inhalation (m^3/yr)	--	3700	8000	8000

* Consists of the following (on a mass basis): 22% fruit, 54% vegetables (including leafy vegetables), and 24% grain.
** For total population and average individual dose calculations.

Figure 3.2-1
PNPP Site Boundary and Unrestricted Area

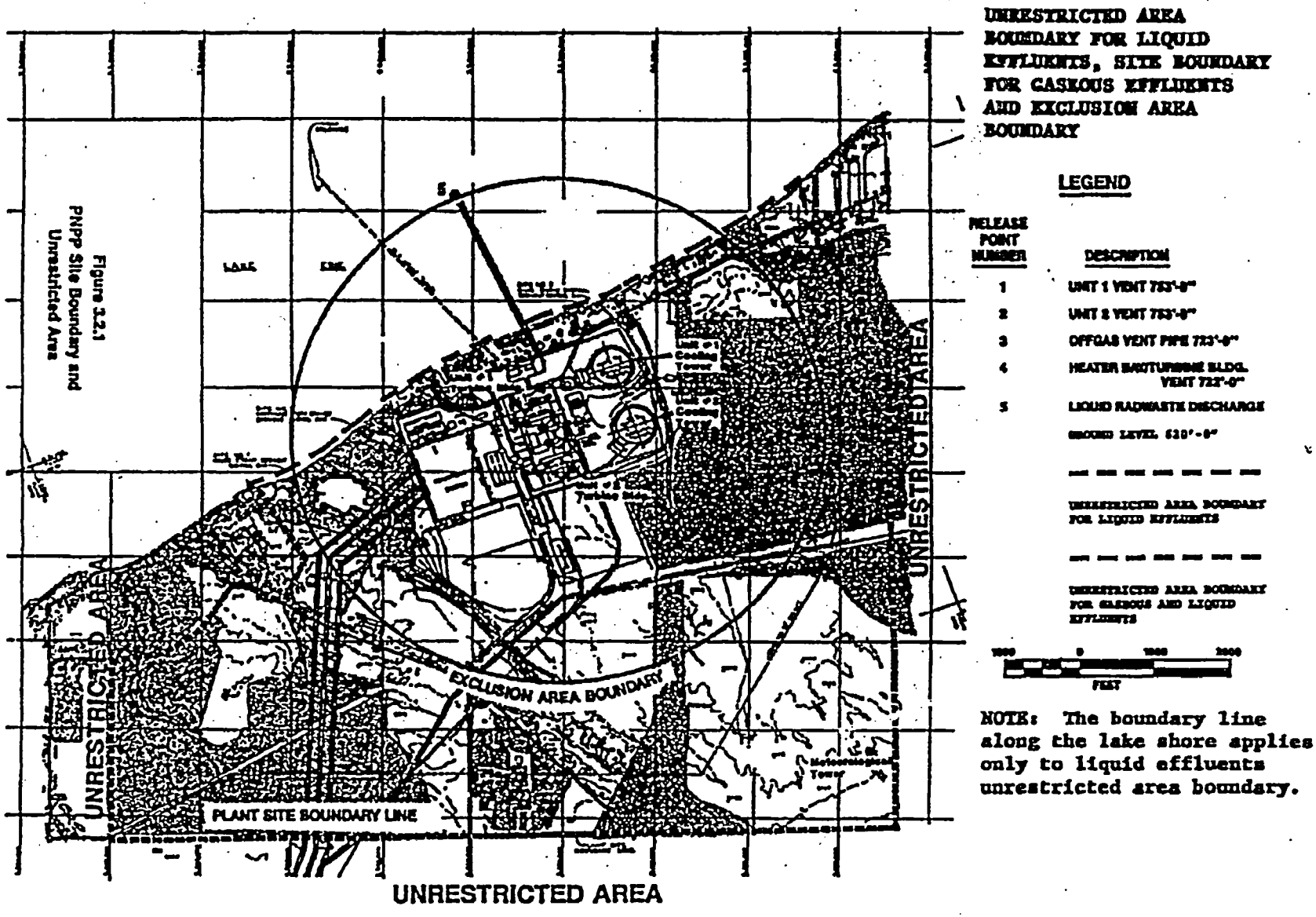

3.3 10CFR50, Appendix I Compliance - Gaseous Effluent Dose

Doses resulting from the release of noble gases, radioiodines, tritium and radionuclides in particulate form must be calculated to show compliance with 10CFR50, Appendix I. The calculations will be performed at least monthly for all gaseous effluents.

3.3.1 Noble Gases

10CFR50, Appendix I, Section II.B.1, limits the releases of gaseous effluents from each reactor to unrestricted areas such that the estimated annual gamma air dose is limited to 10 millirads and the beta air dose is limited to 20 millirads. The external dose pathway only will be considered for noble gases. The controlling location for the above stated dose limits is the nearest site boundary location for the period of release.

ODCM Appendix C controls limit the dose resulting from the release of noble gas radionuclides in gaseous effluents to the following:

a. For gamma radiation, during the current quarter:

$D_{air} \leq 5$ mrads,

b. For beta radiation, during the current quarter:

$D_{air} \leq 10$ mrads,

c. For gamma radiation, during the current year:

$D_{air} \leq 10$ mrads,

d. For beta radiation, during the current year:

$D_{air} \leq 20$ mrads.

3.3.2 Radioiodines, Particulates, and Other Radionuclides

10CFR50, Appendix I, Section II.C, limits the annual release of radioiodines and radioactive materials in particulate form from each reactor such that estimated dose or dose commitment to an individual in an unrestricted area from all pathways of exposure is not in excess of 15 mrem to any organ. The controlling location for this organ dose limit is the nearest site boundary, the deposition (D/Q) for the period of release, and the receptor pathway. Receptor pathway locations will be reviewed once per year following the performance of the Land Use Census to include consideration of nearest residences, garden, and farm animal locations in each sector.

ODCM, Appendix C, CONTROLS limit the dose resultant from the release of iodine-131, iodine-133, tritium, and all radionuclides in particulate form with half-lives greater than eight days to the following:

a. During the current quarter:

Dose to Any Organ ≤ 7.5 mrems

b. During the current year:

Dose to Any Organ ≤ 15 mrems.

3.3.3 Dose Calculations

The following calculations are used to determine gamma and beta air doses resultant from noble gas release to areas at or beyond the site boundary for purpose of showing compliance with 10CFR50, Appendix I. The equations used to calculate organ doses resultant from the release of iodine-131, iodine-133, tritium, and radionuclides in particulate form with half-lives greater than eight days are those found in Section 3.2.3.

Dose values are obtained by applying the dose rates over the appropriate surveillance or sampling time period.

a. Gamma Air Dose from Noble Gas Releases

$$D^{\gamma}_{air} = \left(3.15\text{x}10^{1}\right)\left(\chi/Q\right)\Sigma\left(Q_i\right)\left(DF^{\gamma}_{i}\right)$$

Where:

D^{γ}_{air} = the annual gamma air dose due to noble gas radionuclides, mrad/yr;

DF^{γ}_{i} = the gamma air dose factor for a uniform semi-infinite cloud of radionuclide "i", from Table 3.3-1, (mrad m^3)/(s Ci);

Q_i = the release rate of radionuclide "i", μCi/s;

χ/Q = the annual average dispersion factor (see Appendix A), s/m^3;

3.15×10^1 = the conversion factor to convert (mrad*μCi)/(Ci*s) to mrad/yr.

b. Beta Air dose from Noble Gas Releases

$$D^{\beta}_{air} = \left(3.15x10^{1}\right)\left(\chi/Q\right)\Sigma\left(Q_i\right)\left(DF^{\beta}_{i}\right)$$

Where:

D^{β}_{air} = the annual beta air dose due to noble gas radionuclides, mrad/yr;

DF^{β}_{i} = the beta air dose factor for a uniform semi-infinite cloud of radionuclide "i", from Table 3.3-1, (mrad m^3)/(Ci s);

Q_i = the release rate of radionuclide "i", µCi/s;

χ/Q = the annual average dispersion factor (see Appendix A), s/m^3;

3.15×10^1 = the conversion factor to convert (mrad*µCi)/(Ci*s) to mrad/yr.

3.3.4 Cumulation of Doses

The dose contribution from gaseous effluents will be calculated at least monthly. Calculations will be performed to determine the maximum air dose as well as the maximum organ dose to an individual. These dose calculations will be summed for comparison with quarterly and annual limits. To assure compliance with 10CFR50, Appendix I, the dose limits for air dose and organ dose are those found in Sections 3.3.1 and 3.3.2, respectively. The quarterly limits specified in those sections represent one half of the annual design objectives. If these limits are exceeded, a special report will be submitted to the NRC in accordance with ODCM Appendix C controls.

Table 3.3-1
Gamma and Beta Air Dose Factors for Semi-Infinite Plume
(mrad/s per Ci/m^3)

	Gamma Air Dose Factor $\left(DF_i^{\gamma}\right)$	Beta Air Dose Factor $\left(DF_i^{\beta}\right)$
Ar-41	2.95+02	1.04+02
Kr-83m	6.12-01	9.13+00
Kr-85m	3.90+01	6.24+01
Kr-85	5.45-01	6.18+01
Kr-87	1.96+02	3.27+02
Kr-88	4.82+02	9.29+01
Kr-89	5.48+02	3.36+02
Kr-90	5.14+02	2.48+02
Xe-131m	4.95+00	3.53+01
Xe-133m	1.04+01	4.69+01
Xe-133	1.12+01	3.33+01
Xe-135m	1.07+02	2.34+01
Xe-135	6.09+01	7.80+01
Xe-137	4.79+01	4.03+02
Xe-138	2.92+02	1.51+02

3.3.5 Projection of Doses

Anticipated doses resulting from the release of gaseous effluents will be projected monthly. The doses calculated for the present month will be used as the projected doses unless information exists indicating that actual releases could differ significantly in the next month. In this case the source term will be adjusted to reflect this information and the justification for the adjustment noted.

If the sum of the projected doses for the 31-day period exceeds 0.3 mrem to any organ, appropriate portions of the ventilation exhaust treatment system will be operated to reduce releases. The values for the projected dose impact levels correspond to about one forty-eighth of the 10CFR50, Appendix I dose limits. If continued for a year, these values would correspond to less than one-fourth of the 10CFR50, Appendix I dose limits.

3.4 Population Dose

PNPP's Annual Radioactive Effluent Release Reports, as required by Regulatory Guide 1.21, will include total population dose and average individual doses calculated for all radioactive gaseous effluent releases. The total population dose and average individual dose will be computed, taking into account geographical population distribution and pathway(s) using the equations in Section 3.2. However, the dose factors, DF_{aijp}, differ; total population and average individual doses are

calculated in a manner similar to that used for maximum individuals except that Regulatory Guide 1.109, Revision 1, assumptions for average individuals are used rather than for maximum exposed individuals and they are averaged over all age groups after weighting by the fraction of population in each age group.

4.0 TOTAL DOSE

4.1 40CFR190 Compliance - Uranium Fuel Cycle Dose

Annual dose contributions from liquid and gaseous effluent releases, as discussed in Sections 2.3.2 and 3.3.4, are summed to evaluate compliance with the 40CFR190 annual limit of 25 mrem whole body or any organ (except the thyroid, which is 75 mrem).

PNPP does not intend to exceed 40CFR190 limits during normal operation. However, if such a situation should occur, violations would be handled as per ODCM Appendix C Control 3/4.11.4a. which requires the following:

With the calculated doses from the release of radioactive materials in liquid or gaseous effluents exceeding twice the limits of Control 3.11.1.2a., 3.11.1.2b., 3.11.2.2a., 3.11.2.2b., 3.11.2.3a. or 3.11.2.3b., calculations shall be made including direct radiation contributions from the reactor units and from outside storage tanks to determine whether the above limits of Control 3.11.4 have been exceeded. If such is the case, prepare and submit to the Commission within 30 days, pursuant to Control 6.9.2, a Special Report that defines the corrective action to be taken to reduce subsequent releases to prevent recurrence of exceeding the above limits and includes the schedule for achieving conformance with the above limits. This Special Report, as defined in 10CFR20.405c, shall include an analysis that estimates the radiation exposure (dose) to a MEMBER OF THE PUBLIC from uranium fuel cycle sources, including all effluent pathways and direct radiation, for the calendar year that includes the release(s) covered by this report. It shall also describe levels of radiation and concentrations of radioactive material involved, and the cause of the exposure levels or concentrations. If the estimated dose(s) exceeds the above limits, and if the release condition resulting in violation of 40CFR190 has not already been corrected, the Special Report shall include a request for a variance in accordance with the provisions of 40CFR190. Submittal of the report is considered a timely request, and a variance is granted until staff action on the request is complete.

This Special Report shall contain:

1. A determination of which fuel cycle facilities or operations, in addition to the nuclear power reactor unit(s) at the site, contribute to the annual dose to the maximum exposed individual. Nuclear fuel facilities over five miles from PNPP need not be considered in this determination.

2. A determination of the maximum exposed individual.

3. A determination of the total annual dose to this person from all existing pathways and sources of radioactive effluents and direct radiation using the methodologies described in this ODCM. Where additional information on pathways and nuclides is needed, the best available information will be used and documented.

4. A determination of the dose resulting from direct radiation from the plant and storage facilities.

The whole body and organ doses resulting from liquid effluents from the PNPP will be summed with the doses resulting from gaseous releases of noble gases, radioiodines, tritium, and particulates with half-lines greater than eight days when any of the dose limits outlined in Sections 2.3.2, 3.3.1 or 3.3.2 are exceeded by a factor of two. The doses from the PNPP will be summed with the dose to the maximum exposed individual contributed from other operations of the uranium fuel cycle.

4.2 Direct Radiation Dose from PNPP

Potential direct radiation dose to individuals outside PNPP will arise from (a) skyshine and direct dose from the turbines, (b) direct dose from the external surfaces of buildings, and (c) direct dose from stored radwaste.

Coolant activation by high energy neutrons, the $O^{16}(n,p)N^{16}$ reaction, is of interest in boiling water reactors, like PNPP, because it can result in turbine skyshine and direct dose. The N-16 present in the steam of a direct cycle BWR is carried with the steam into the turbine moisture separators, and associated equipment. Although N-16 has a half-life of 7.13 seconds, its gamma emission can present a radiation dose problem to the site boundary as a result of the high energy gamma scatter from structures and the atmosphere.

All external walls of buildings at PNPP have been designed to attenuate radiation sources from within the plant to maximum of 0.5 mrem/h outside, with an expected radiation dose not to exceed 0.25 mrem/h.

Projected direct radiation dose assessment for normal operations was performed, based on 80% load factor and 100% occupancy, for the closest site boundary location (WSW sector). Direct dose from turbine skyshine was calculated to be 1.3 mrem/yr and direct dose from the surface of buildings was calculated to be 2.2 E-3 mrem/yr.

Direct radiation doses at PNPP will be measured by self-contained dosimeters encircling the site located in the general area of the site boundary. These self-contained dosimeters will be of the thermoluminescent variety (TLDs) with analyses performed quarterly and annually.

4.3 Dose to Members of the Public While Onsite

ODCM Appendix C Control 6.9.1.7 requires "assessment of the radiation doses from radioactive liquid and gaseous effluents to members of the public due to their activities inside the site boundary." This assessment is included in Annual Radioactive Effluent Release Reporting.

A member of the public is defined in ODCM Appendix C to include anyone who is not occupationally associated with the plant, i.e., not a utility employee, contractor or vendor. Also excluded from this category is any person who enters the site to service equipment or make deliveries.

Maximum dose to member of the public while onsite is conservatively assessed relative to offsite dose values. The assessment methodology incorporates use of appropriate dilution, dispersion, and occupancy factors for onsite activities.

The only liquid effluent dose pathway affecting members of the public while onsite is shore exposure, which is assumed to be fishing on the Lake Erie shoreline. Onsite dose assessment is made via ratio to the maximum calculated offsite shore exposure dose, using adjustments for occupancy factor and liquid effluent dilution.

Several cases are considered for gaseous effluent dose assessment to member of the public while onsite including: traversing a public road within the site boundary, lakeshore fishing, non-PNPP related training sessions at the Training and Education Center, car pooling to the Primary Access Control Point (PACP) parking lot, and job applicant interviews. This evaluation is made using "relative χ/Q" (atmospheric dispersion) values. "Relative χ/Q" values are the product of the highest annual average χ/Q for the point of concern, and occupancy factor for the case. The ratio of the highest onsite "relative χ/Q" to the highest site boundary "relative χ/Q" is used as an adjustment factor. (A unity occupancy factor is used in the determination of the highest site boundary "relative χ/Q"). A conservative onsite dose determination is made by applying the "relative χ/Q" adjustment factor for the highest potential onsite dose activity to the highest calculated gaseous effluent offsite dose.

5.0 RADIOLOGICAL ENVIRONMENTAL MONITORING PROGRAM

5.1 Monitoring Program

Environmental samples shall be collected and analyzed according to Table 5.1-1 at locations shown in Figures 5.1-1, 5.1-2 and 5.1-3. The Radiological Environmental Monitoring Program (REMP) sample locations are controlled by REMP-0013. A list and figures of the specific locations are contained in the Master List of Sampling Locations in the REMP file. Analytical techniques used shall ensure that the detection capabilities in Table 5.1-3 are achieved.

Ground water sampling will not be conducted as part of PNPP's REMP because this source is not tapped for drinking or irrigation purposes in the area of the plant. The position of the plant and the underdrain system with respect to the hydraulic gradient is such that any leakage or overflow from the underdrain system will flow north towards Lake Erie. Local domestic wells outside the exclusion area boundary are up-gradient from the plant. As part of the REMP, samples will be routinely collected from the closest potable water intakes on Lake Erie.

The results of the radiological environmental monitoring program are intended to supplement the results of the radiological effluent monitoring by verifying that the measurable concentrations of radioactive materials and levels of radiation are not higher than expected on the basis of the effluent measurements and modeling of the environmental exposure pathways. Thus, the specified environmental monitoring program provides measurements of radiation and of radioactive materials in those exposure pathways and for those radionuclides which lead to the highest potential radiation exposures of individuals resulting from the station operation. The initial radiological environmental monitoring program was conducted for the first three years of commercial operation; program changes may now be proposed based on operational experience.

5.2 Land Use Census Program

A Land Use Census shall be conducted annually to identify, within a distance of 8 km (5 miles), the location in each of the meteorological sectors of the nearest residence, the nearest garden* greater than $50m^2$ ($500\ ft^2$) and the nearest milk-producing animal.

If a Land Use Census identifies a location(s) that yields a calculated dose or dose commitment (via the same exposure pathway) 20% greater than at the location from which samples are currently being obtained the new location(s) will be added to the radiological environmental monitoring program within 30 days. The sampling location(s), excluding the control station location, having the lowest calculated dose or dose commitment(s), via the same exposure pathway, may be deleted from this monitoring program after October 31 of the year in which this Land Use Census was conducted.

The Land Use Census shall be conducted during the growing season at least once per 12 months using that information that will provide the best results, such as by a door-to-door survey, aerial survey, general observations, or by consulting local agriculture authorities. The results of the Land Use Census shall be included in the Annual Radiological Environmental Operating Report.

* Broad leaf vegetation sampling of at least three different types of vegetation may be performed at the site boundary in each of two different sectors with the highest predicted D/Qs in lieu of the garden census. Specifications for broad leaf vegetation sampling in Table 5.1-1 shall be followed, including analysis of control samples.

5.3 Inter-Laboratory Comparison Program

The laboratories of the licensee and/or licensee's contractors which perform analyses shall participate in an Interlaboratory Comparison Program which has been approved by the Commission. This participation shall include all of the determinations (sample medium-radionuclide combinations) that are included in the monitoring program. The results of analysis of these comparison samples shall be included in the Annual Radiological Environmental Operating Report.

If the results of a determination in the comparison crosscheck program are outside the specified control limits, the laboratory shall investigate the cause of the problem and take steps to correct it. The results of this investigation and corrective action shall be included in the Annual Radiological Environmental Operating Report.

Table 5.1-1
RADIOLOGICAL ENVIRONMENTAL MONITORING PROGRAM

Exposure Pathway and/or Sample	Number of Samples and Sample Location[1]	Sampling and Collection Frequency	Type and Frequency of Analysis
1. Direct Radiation[2]			
	Twenty eight routine monitoring stations either with two or more dosimeters or with one instrument for measuring and recording dose rate continuously, placed as follows: An inner ring of stations, one in each meteorological sector, other than those sectors entirely over water (N, NE, NNE, NNW, NW, W, WNW), in the general area of the SITE BOUNDARY; An outer ring of stations, one in each meteorological sector, other than those sectors entirely over water (N, NNE, NNW, NW, W, WNW), in the 6- to 8- km range from the site; and The balance of the stations to be placed in special interest areas such as population centers, nearby residences, schools, and in one or two areas to serve as control stations.	Quarterly	Gamma dose quarterly

Table 5.1-1 (Cont.)
RADIOLOGICAL ENVIRONMENTAL MONITORING PROGRAM

Exposure Pathway and/or Sample	Number of Samples and Sample Location[1]	Sampling and Collection Frequency	Type and Frequency of Analysis
2. Airborne			
Radio-iodine and Particulate	Samples from five locations: Three samples from close to the three SITE BOUNDARY locations, in different sectors, of the highest calculated annual average ground-level D/Q; One sample from the vicinity of a community having the highest calculated annual average ground level D/Q; and One sample from a control location, as for example 15 to 30 km distant and in the least prevalent wind direction.	Continuous sampler operation with sample collection weekly, or more frequently, if required by dust loading.	Radio-Iodine Canister: I-131 analysis weekly Particulate Sampler: Gross beta radioactivity analysis following filter change[3]; Gamma isotopic analysis[4] of composite (by location) quarterly.

Table 5.1-1 (Cont.)
RADIOLOGICAL ENVIRONMENTAL MONITORING PROGRAM

Exposure Pathway and/or Sample	Number of Samples and Sample Location[1]	Sampling and Collection Frequency	Type and Frequency of Analysis
3. Waterborne			
a. Surface	Two samples	Composite sample over 1-month period[5].	Gamma isotopic analysis[4] monthly. Composite for tritium analysis quarterly.
b. Drinking	One sample of each of one to three of the nearest water supplies that could be affected by its discharge. One sample from a control location.	Composite sample over 2-week period[5] when I-131 analysis is performed; monthly composite otherwise.	I-131 analysis on each composite when the dose calculated from the consumption of the water is greater than 1 mrem per year.[6] Composite for gross beta and gamma isotopic analysis[4] monthly. Composite for tritium analysis quarterly.
c. Sediment from Shoreline	One sample from area with existing or potential recreational value.	Semi-annually	Gamma isotopic analysis[4] semi-annually.

Table 5.1-1 (Cont.)
RADIOLOGICAL ENVIRONMENTAL MONITORING PROGRAM

Exposure Pathway and/or Sample	Number of Samples and Sample Location[1]	Sampling and Collection Frequency	Type and Frequency of Analysis
4. Ingestion			
a. Milk	Samples from milking animals in three locations within 5 km distance having the highest dose potential. If there are none, then one sample from milking animals in each of three areas between 5 to 8 km distant where doses are calculated to be greater than 1 mrem per yr[6]. One sample from milking animals at a control location 15 to 30 km distant and in the least prevalent wind direction.	Semi-monthly when animals are on pasture; Monthly at other times.	Gamma isotopic analysis[4] and I-131 analysis semi-monthly when animals are on pasture; monthly at other times.
b. Fish and Invertebrates	One sample of one commercially and/or recreationally important species in vicinity of plant discharge area. One sample of same species in areas not influenced by plant discharge.	One sample in season.	Gamma isotopic analysis[4] on edible portions.
c. Food Products	Samples of three different kinds of broad leaf vegetation grown nearest to each of two different offsite locations of highest predicted annual average ground level D/Q, if milk sampling is not performed.	Monthly during growing season.	Gamma isotopic analysis[4] and I-131 analysis.
	One sample of each of the similar broad leaf vegetation grown 15 to 30 km distant in the least prevalent wind direction, if milk sampling is not performed.	Monthly during growing season.	Gamma isotopic analysis[4] and I-131 analysis.

Table 5.1-1 (Cont.)

RADIOLOGICAL ENVIRONMENTAL MONITORING PROGRAM

Table Notations

(1) Deviations are permitted from the required sampling schedule if specimens are unobtainable due to circumstances such as hazardous conditions, seasonal unavailability, and malfunction of automatic sampling equipment. If specimens are unobtainable due to sampling equipment malfunction, effort shall be made to complete corrective action prior to the end of the next sampling period. All deviations from the sampling schedule shall be documented in the Annual Radiological Environmental Operating Report pursuant to <ODCM Appendix C Control 6.9.1.6>. It is recognized that, at times, it may not be possible or practicable to continue to obtain samples of the media of choice at the most desired location or time. In these instances suitable specific alternative media and locations may be chosen for the particular pathway in question and appropriate substitutions made with in the thirty days.

(2) One or more instruments, such as a pressurized ion chamber, for measuring and recording dose rate continuously may be used in place of, or in addition to, integrating dosimeters. For the purposes of this table, a thermoluminescent dosimeter (TLD) is considered to be one phosphor; two or more phosphors in a packet are considered as two or more dosimeters.

(3) Airborne particulate sample filters shall be analyzed for gross beta radioactivity 24 hours or more after sampling to allow for radon and thoron daughter decay. If gross beta activity in air particulate samples is greater than 10 times the yearly mean of control samples, gamma isotopic analysis shall be performed on the individual samples.

(4) Gamma isotopic analysis means the identification and quantification of gamma-emitting radionuclides that may be attributable to the effluents from the facility.

(5) A composite sample is one in which the quantity (aliquot) of liquid sampled is proportional to the quantity of flowing liquid and in which the method of sampling employed results in a specimen that is representative of the liquid flow. In this program composite sample aliquots shall be collected at time intervals that are very short (e.g., hourly) relative to the compositing period (e.g., monthly) in order to assure obtaining a representative sample.

(6) The dose shall be calculated for the maximum organ and age group, using the methodology and parameters within this manual.

Table 5.1-2

Reporting Levels for Radioactivity Concentrations in Environmental Samples

ANALYSIS	Water (pCi/l)	AIRBORNE PARTICULATE OR GASES (pCi/m^3)	FISH (pCi/kg, wet)	MILK (pCi/l)	FOOD PRODUCTS (pCi/kg, wet)
H-3	2×10^4 [a]				
Mn-54	1×10^3		3×10^4		
Fe-59	4×10^2		1×10^4		
Co-58	1×10^3		3×10^4		
Co-60	3×10^2		1×10^4		
Zn-65	3×10^2		2×10^4		
Zr-Nb-95	4×10^2				
I-131	2×10^0	9×10^{-1}		3×10^0	1×10^2
Cs-134	3×10^1	1×10^1	1×10^3	6×10^1	1×10^3
Cs-137	5×10^1	2×10^1	2×10^3	7×10^1	2×10^3
Ba-La-140	2×10^2			3×10^2	

[a] For drinking water samples. The value given is the 40CFR141 value.

Table 5.1-3

Detection Capabilities for Environmental Sample Analysis and Lower Limit of Detection (LLD) [a] [b]

ANALYSIS [c]	Water (pCi/l)	AIRBORNE PARTICULATE OR GASES (pCi/m^3)	FISH (pCi/kg, wet)	MILK (pCi/l)	FOOD PRODUCTS (pCi/kg, wet)	SEDIMENT (pCi/kg, dry)
Gross Beta	4×10^0	1×10^{-2}				
H-3	2×10^3 [d]					
Mn-54	1.5×10^1		1.3×10^2			
Fe-59	3×10^1		2.6×10^2			
Co-58, 60	1.5×10^1		1.3×10^2			
Zn-65	3×10^1		2.6×10^2			
Nb-95	1.5×10^1					
Zr-95	3×10^1					
I-131	1×10^0 [e]	7×10^{-2}		1×10^0	6×10^1	
Cs-134	1.5×10^1	5×10^{-2}	1.3×10^2	1.5×10^1	6×10^1	1.5×10^2
Cs-137	1.8×10^1	6×10^{-2}	1.5×10^2	1.8×10^1	8×10^1	1.8×10^2
Ba-140	6×10^1			6×10^1		
La-140	1.5×10^1			1.5×10^1		

[a] Required detection capabilities for thermoluminescent dosimeters used for environmental measurements shall be in accordance with the recommendations of Regulatory Guide 4.13, except for specification regarding energy dependence. Correction factors shall be provided for energy ranges not meeting the energy dependence specification.

[b] The methodology for determining the LLD is contained in Appendix B.

[c] This list does not mean that only these nuclides are to be considered. Other peaks that are identifiable, together with those of the above nuclides, shall also be analyzed and reported in the Annual Radiological Environmental Operating Report pursuant to Control 6.9.1.6. For these radionuclides in ODCM Appendix C Table 4.12-1 which are not detected, the typical LLDs for the measurement system will be separately reported in the annual report.

[d] If no drinking water pathway exists, a value of 3×10^3 pCi/L may be used.

[e] If no drinking water pathway exists, a value of 1.5×10^1 pCi/L may be used.

Figure 5.1-1

TECHNICAL SPECIFICATION REQUIRED
REMP SAMPLING LOCATIONS WITHIN TWO MILES OF THE PLANT SITE

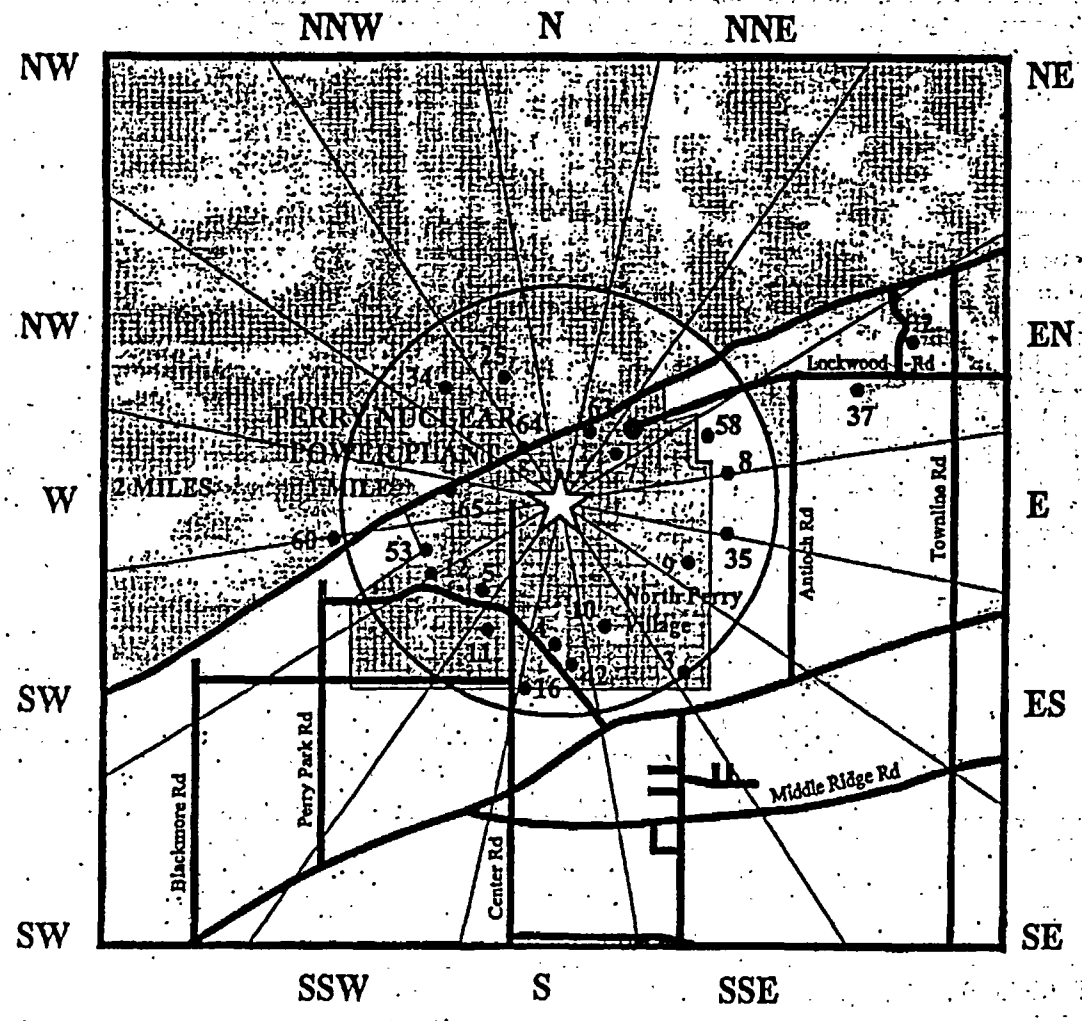

LEGEND:

STATION NO.	MEDIA	DIRECTION
2	FP	NNE
3	TLD	SE
4	AIR, TLD	S
5	TLD	SW
7	AIR, TLD	NE
8	TLD	E
9	TLD	ESE
10	TLD	SSE
11	TLD	WSW
12	TLD	WSW
25	SED, FSH	NNW
34	WTR	NW
35	AIR, TLD	E
37	FP	ENE
53	TLD	ENE
58	TLD	ENE

Figure 5.1-2

TECHNICAL SPECIFICATION REQUIRED REMP
SAMPLING LOCATIONS BETWEEN TWO AND EIGHT MILES FROM THE PLANT SITE

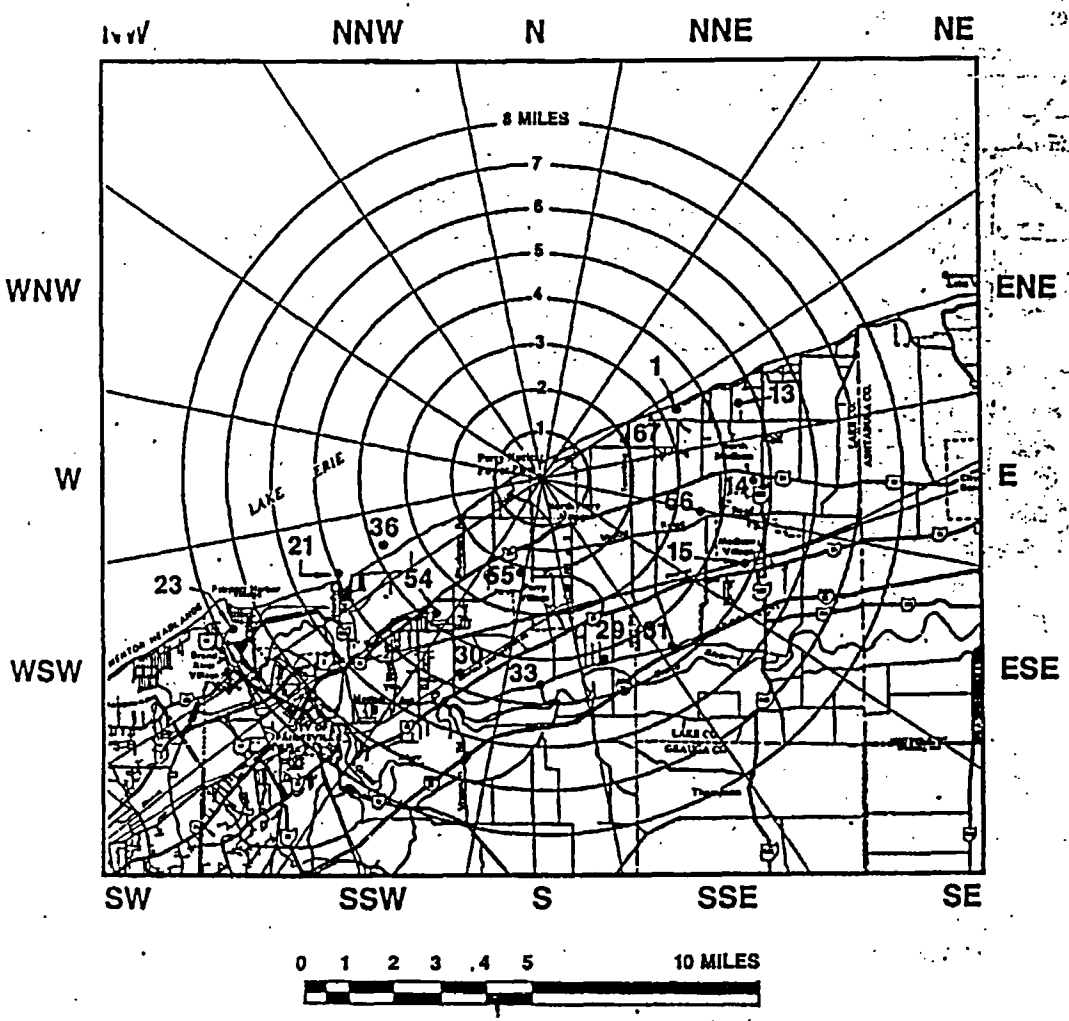

LEGEND:

STATION NO.	MEDIA	DIRECTION
1	AIR, TLD	ENE
13	TLD	ENE
14	TLD	E
15	TLD	ESE
21	TLD	WSW
23	TLD	WSW
29	TLD	SSE
30	TLD	SSW
31	TLD	SE
33	TLD	S
36	WATER, TLD	WSW
54	TLD	SW
55	TLD	S
56	TLD	ESE

Figure 5.1-3

TECHNICAL SPECIFICATION REQUIRED
REMP SAMPLING LOCATIONS GREATER THAN EIGHT MILES FROM THE PLANT SITE

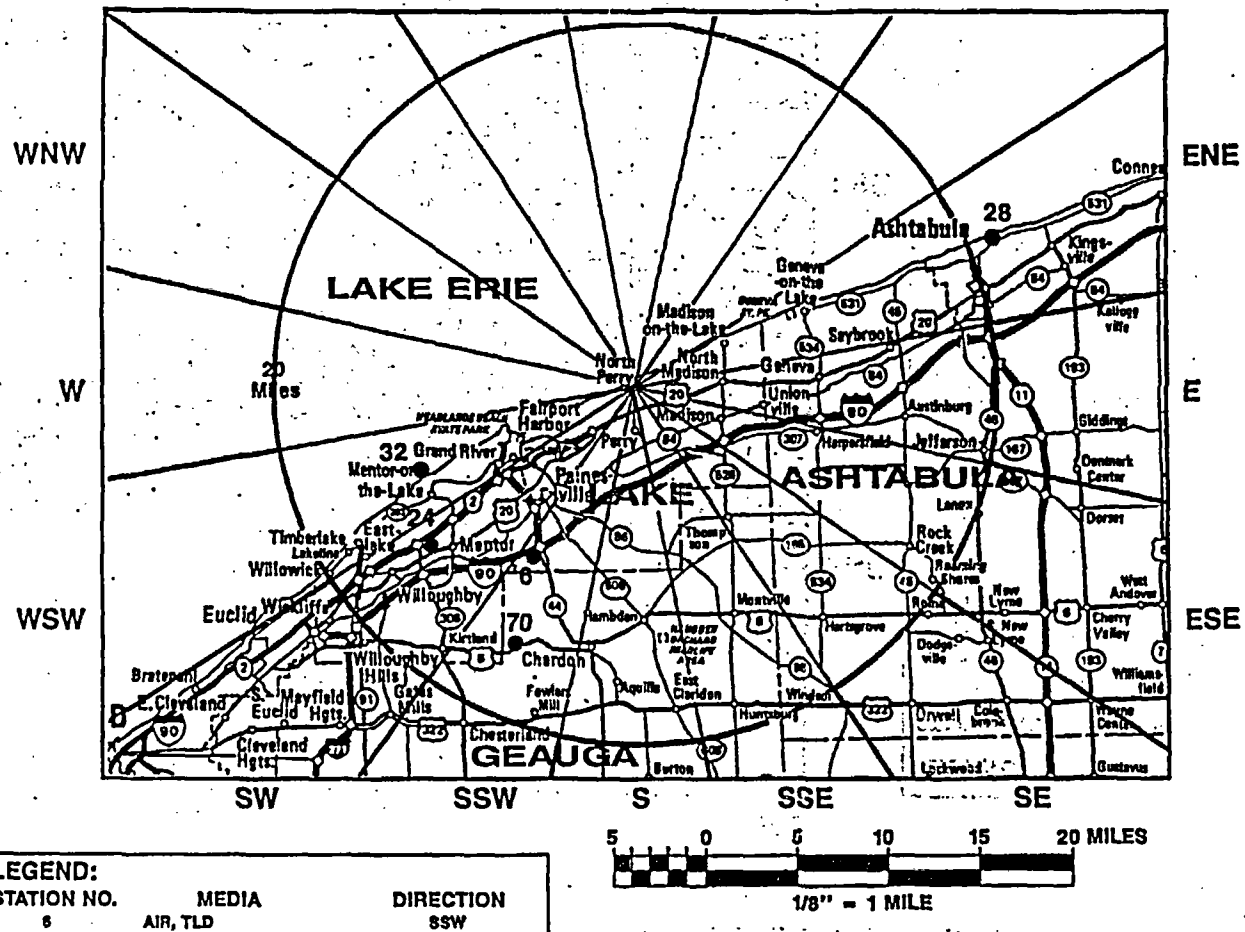

LEGEND:

STATION NO.	MEDIA	DIRECTION
6	AIR, TLD	SSW
24	TLD	SW
28	WATER	ENE
32	FISH	WSW
70	FP	SSW

Appendix A

Atmospheric Dispersion and Deposition Parameters

The atmospheric dispersion and deposition parameters used to calculate gaseous effluent doses will be calculated using the following equations. Dose calculations will be performed using meteorological conditions concurrent with the time of release of radioactive materials in gaseous effluents or using historical average atmospheric conditions. All atmospheric releases at PNPP are considered to be ground-level releases.

a. Constant Mean Wind Direction Relative Dispersion Factor

$$\chi/Q = \frac{(2.032)(T_f)}{(\bar{u})(x)(\sigma)} \qquad \text{(A-1)}$$

Where:

χ/Q = the annual average dispersion factor, s/m^3;

T_f = the terrain correction factor, from FSAR Table 2.3-26, dimensionless;

$\bar{u}$ = the wind speed (measured at 10m), in m/s;

X = the distance of calculation, in m;

2.032 = $(2/\pi)^{1/2}$ divided by the width in radians of a 22.5°sector

$$\sigma = \text{the lesser of } \left(\sigma_z^2 + \frac{H_c^2}{2\pi}\right)^{1/2} \text{ or } (\sigma_z)\left(3^{1/2}\right)$$

Where:

H_c = the building height (44.8m);

σ_z = the vertical dispersion coefficient, per Regulatory Guide 1.111, in m.

b. Depleted Relative Dispersion Factor

$$\chi/Q_d = (\chi/Q)(DPL_j) \qquad \text{(A-2)}$$

Where:

χ/Q_d = the depleted relative dispersion factor (for airborne halogens and particulates), in s/m^3;

DPL_j = the ground depletion factor for the "j"th distance, interpolated from Table A-1, dimensionless;

χ/Q = the annual average dispersion factor per equation A-1, s/m3.

c. Ground Deposition

$$D/Q = \frac{(DEP_j)(T_f)}{(0.3927)(x)} \qquad \text{(A-3)}$$

Where:

D/Q = the relative deposition per unit area (for halogens and particulates), m^{-2};

DEP_j = the ground deposition factor for the "j"th distance, interpolated from Table A-1, m^{-1};

T_f = terrain correction factor, from FSAR Table 2.3-26, dimensionless;

x = the "j"th distance, m;

0.3927 = radians per 22.5° sector

Table A-1
Atmospheric Depletion and Deposition Factors

		Depletion Factors (DPL_j)	Deposition Factors (DEP_j, m^{-1})
Pasquill Stability	Class	All	All
Distance (meters)	200	0.970	1.25E-04
	500	0.936	8.0E-05
	1,000	0.900	5.4E-05
	2,000	0.860	3.2E-05
	3,000	0.832	2.6E-05
	6,000	0.770	1.5E-05
	10,000	0.714	9.9E-06
	30,000	0.590	4.5E-06
	50,000	0.517	3.0E-06
	80,000	0.440	2.0E-06

The following tables contain annual average atmospheric dispersion and deposition parameters for long-term releases at PNPP. Long-term releases are those that occur greater than 500 hours per year. The highest annual average relative concentration (χ/Q) value at the site boundary for sectors over land shall be used for radioactive gaseous effluent monitor setpoint calculations. The dispersion model used was XOQDOQ, with PNPP FSAR site-specific terrain adjustment factors included. Dispersion values are based on seven years of meteorological data (May 1, 1972 through April 30, 1974 and September 1, 1977 through August 31, 1982), ground-level releases, sector spread for purge calculations, and twelve wind speed classes.

Table A-2
Site Boundary Atmospheric Dispersion (χ/Q) and Deposition Parameters (D/Q) for PNPP Unit 1

SECTOR	DISTANCE (MILES)	χ/Q (SEC./CUB. METER)	D/Q (PER SQ. METER)
N	0.18	5.7E-05*	1.6E-07
NNE	0.25	1.8E-05*	7.9E-08
NE	0.42	5.8E-06*	3.1E-08
ENE	0.67	2.1E-06*	1.6E-08
E	0.67	2.2E-06	1.8E-08
ESE	0.67	1.6E-06	1.3E-08
SE	0.79	1.4E-06	1.1E-08
SSE	0.82	2.2E-06	1.4E-08
S	0.81	2.7E-06	1.6E-08
SSW	0.80	1.3E-06	6.8E-09
SW	0.65	2.3E-06*	1.1E-08
WSW	0.56	4.2E-06*	1.5E-08
W	0.27	2.5E-05*	4.6E-08
WNW	0.18	5.9E-05*	8.4E-08
NW	0.17	6.6E-05*	1.1E-07
NNW	0.17	5.9E-05*	1.2E-07

NOTE: All χ/Q values are taken from the Updated Safety Analysis Report (USAR) Table 2.3-27. All marked values (*) are from Unit 1 USAR values, and the balance are Unit 2 values. In each case, the most conservative χ/Q value is utilized.

Table A-3
Atmospheric Dispersion (χ/Q) as a Function of Distance (s/m^3)

SECTOR	0.2 (MILES)	0.3 (MILES)	0.4 (MILES)	0.5 (MILES)	0.6 (MILES)
N	4.904E-05	2.453E-05	1.525E-05	1.057E-05	7.918E-06
NNE	2.656E-05	1.360E-05	8.640E-06	6.082E-06	4.612E-06
NE	1.859E-05	9.760E-06	6.293E-06	4.460E-06	3.383E-06
ENE	1.327E-05	7.129E-06	4.636E-06	3.293E-06	2.490E-06
E	1.363E-05	7.362E-06	4.760E-06	3.367E-06	2.538E-06
ESE	1.025E-05	5.566E-06	3.602E-06	2.547E-06	1.916E-06
SE	1.113E-05	6.061E-06	3.935E-06	2.788E-06	2.100E-06
SSE	1.894E-05	1.022E-05	6.647E-06	4.718E-06	3.560E-06
S	2.283E-05	1.227E-05	7.932E-06	5.615E-05	4.238E-06
SSW	1.142E-05	6.079E-06	3.925E-06	2.777E-06	2.097E-06
SW	1.449E-05	7.663E-06	4.928E-06	3.479E-06	2.622E-06
WSW	2.151E-05	1.111E-05	7.031E-06	4.934E-06	3.733E-06
W	4.184E-05	2.081E-05	1.281E-05	8.833E-06	6.606E-06
WNW	4.669E-05	2.298E-05	1.401E-05	9.573E-06	7.093E-06
NW	4.908E-05	2.423E-05	1.482E-05	1.015E-05	7.521E-06
NNW	4.580E-05	2.266E-05	1.390E-05	9.541E-06	7.083E-06

SECTOR	0.7 (MILES)	0.8 (MILES)	0.9 (MILES)	1.0 (MILES)	1.1 (MILES)
N	6.138E-06	4.968E-06	4.203E-06	3.636E-06	1.949E-06
NNE	3.622E-06	2.947E-06	2.481E-06	2.132E-06	1.278E-06
NE	2.662E-06	2.165E-06	1.815E-06	1.552E-06	9.269E-07
ENE	1.957E-06	1.588E-06	1.325E-06	1.129E-06	6.710E-07
E	1.991E-06	1.613E-06	1.343E-06	1.141E-06	6.768E-07
ESE	1.501E-06	1.215E-06	1.010E-06	8.571E-07	5.080E-07
SE	1.647E-06	1.334E-06	1.108E-06	9.402E-07	4.456E-07
SSE	2.796E-06	2.266E-06	1.885E-06	1.601E-06	5.524E-07
S	3.327E-06	2.697E-06	2.247E-06	1.911E-06	7.340E-07
SSW	1.646E-06	1.335E-06	1.114E-06	9.486E-07	5.223E-07
SW	2.053E-06	1.664E-06	1.391E-06	1.188E-06	5.667E-07
WSW	2.927E-06	2.380E-06	2.002E-06	1.719E-06	8.671E-07
W	5.110E-06	4.135E-06	3.504E-06	3.036E-06	1.630E-06
WNW	5.434E-06	4.378E-06	3.719E-06	3.235E-06	1.845E-06
NW	5.764E-06	4.643E-06	3.941E-06	3.425E-06	1.952E-06
NNW	5.439E-06	4.385E-06	3.720E-06	3.230E-06	1.839E-06

Table A-3 (Cont.)
Atmospheric Dispersion (χ/Q) as a Function of Distance (s/m^3)

SECTOR	1.2 (MILES)	1.3 (MILES)	1.4 (MILES)	1.5 (MILES)	1.6 (MILES)
N	1.729E-06	1.549E-06	1.399E-06	1.273E-06	1.166E-06
NNE	1.128E-06	1.006E-06	9.050E-07	8.202E-07	7.485E-07
NE	8.150E-07	7.243E-07	6.494E-07	5.867E-07	5.340E-07
ENE	5.878E-07	5.205E-07	4.652E-07	4.190E-07	3.803E-07
E	5.917E-07	5.230E-07	4.667E-07	4.197E-07	3.804E-07
ESE	4.437E-07	3.919E-07	3.494E-07	3.140E-07	2.843E-07
SE	3.891E-07	3.436E-07	3.062E-07	2.751E-07	2.491E-07
SSE	4.829E-07	4.267E-07	3.807E-07	3.423E-07	3.102E-07
S	6.424E-07	5.684E-07	5.076E-07	4.569E-07	4.145E-07
SSW	4.576E-07	4.054E-07	3.624E-07	3.266E-07	2.965E-07
SW	4.976E-07	4.417E-07	3.955E-07	3.570E-07	3.246E-07
WSW	7.648E-07	6.814E-07	6.125E-07	5.547E-07	5.060E-07
W	1.448E-06	1.299E-06	1.175E-06	1.070E-06	9.809E-07
WNW	1.644E-06	1.479E-06	1.341E-06	1.224E-06	1.124E-06
NW	1.733E-06	1.563E-06	1.416E-06	1.292E-06	1.186E-06
NNW	1.637E-06	1.471E-06	1.332E-06	1.214E-06	1.115E-06

SECTOR	1.7 (MILES)	1.8 (MILES)	1.9 (MILES)	2.0 (MILES)	2.1 (MILES)
N	1.074E-06	9.931E-07	9.226E-07	8.604E-07	8.052E-07
NNE	6.867E-07	6.331E-07	5.864E-07	5.453E-07	5.090E-07
NE	4.886E-07	4.494E-07	4.153E-07	3.854E-07	3.263E-07
ENE	3.471E-07	3.184E-07	2.936E-07	2.718E-07	2.526E-07
E	3.467E-07	3.177E-07	2.925E-07	2.705E-07	2.283E-07
ESE	2.590E-07	2.371E-07	2.182E-07	2.017E-07	1.871E-07
SE	2.268E-07	2.076E-07	1.910E-07	1.765E-07	1.637E-07
SSE	2.827E-07	2.590E-07	2.384E-07	2.205E-07	1.407E-07
S	3.780E-07	3.466E-07	3.194E-07	2.955E-07	1.373E-07
SSW	2.706E-07	2.484E-07	2.290E-07	2.121E-07	1.409E-07
SW	2.968E-07	2.727E-07	2.518E-07	2.335E-07	2.173E-07
WSW	4.639E-07	4.275E-07	3.957E-07	3.678E-07	5.303E-07
W	9.037E-07	8.365E-07	7.777E-07	7.258E-07	1.050E-06
WNW	1.038E-06	9.622E-07	8.960E-07	8.375E-07	1.142E-06
NW	1.095E-06	1.015E-06	9.445E-07	8.826E-07	8.275E-07
NNW	1.028E-06	9.527E-07	8.865E-07	8.281E-07	7.761E-07

Table A-3 (Cont.)
Atmospheric Dispersion (χ/Q) as a Function of Distance (s/m^3)

SECTOR	2.2 (MILES)	2.3 (MILES)	2.4 (MILES)	2.5 (MILES)	2.6 (MILES)
N	7.560E-07	7.118E-07	6.720E-07	6.359E-07	6.033E-07
NNE	4.766E-07	4.477E-07	4.217E-07	3.982E-07	3.770E-07
NE	3.050E-07	2.859E-07	2.688E-07	2.534E-07	2.395E-07
ENE	2.356E-07	2.205E-07	2.069E-07	1.947E-07	1.837E-07
E	2.127E-07	1.988E-07	1.864E-07	1.752E-07	1.652E-07
ESE	1.743E-07	1.628E-07	1.525E-07	1.433E-07	1.351E-07
SE	1.524E-07	1.424E-07	1.334E-07	1.253E-07	1.181E-07
SSE	1.311E-07	1.225E-07	1.149E-07	1.080E-07	1.018E-07
S	1.280E-07	1.197E-07	1.123E-07	1.056E-07	9.963E-08
SSW	1.314E-07	1.230E-07	1.154E-07	1.087E-07	1.025E-07
SW	2.030E-07	1.902E-07	1.787E-07	1.683E-07	1.590E-07
WSW	4.964E-07	4.661E-07	4.388E-07	4.142E-07	3.920E-07
W	9.867E-07	9.296E-07	8.780E-07	8.313E-07	7.891E-07
WNW	1.075E-06	1.014E-06	9.587E-07	9.088E-07	8.636E-07
NW	7.782E-07	7.339E-07	6.939E-07	6.576E-07	6.247E-07
NNW	7.297E-07	6.879E-07	6.502E-07	6.161E-07	5.852E-07

SECTOR	2.7 (MILES)	2.8 (MILES)	2.9 (MILES)	3.0 (MILES)	3.1 (MILES)
N	5.734E-07	5.460E-07	5.208E-07	4.976E-07	4.762E-07
NNE	3.576E-07	3.398E-07	3.235E-07	3.086E-07	2.948E-07
NE	2.268E-07	2.152E-07	2.046E-07	1.949E-07	1.859E-07
ENE	1.737E-07	1.645E-07	1.562E-07	1.485E-07	1.415E-07
E	1.560E-07	1.477E-07	1.401E-07	1.331E-07	1.267E-07
ESE	1.275E-07	1.207E-07	1.144E-07	1.087E-07	9.399E-08
SE	1.115E-07	1.054E-07	9.996E-08	9.493E-08	9.031E-08
SSE	9.613E-08	9.099E-08	8.630E-08	8.200E-08	7.805E-08
S	9.415E-08	8.917E-08	8.462E-08	8.044E-08	7.661E-08
SSW	9.697E-08	9.189E-08	8.725E-08	8.299E-08	7.907E-08
SW	1.505E-07	1.428E-07	1.357E-07	1.291E-07	1.231E-07
WSW	3.716E-07	3.531E-07	3.360E-07	3.204E-07	2.520E-07
W	7.503E-07	7.147E-07	6.820E-07	6.519E-07	5.874E-07
WNW	8.220E-07	7.838E-07	7.487E-07	7.164E-07	7.722E-07
NW	5.945E-07	5.668E-07	5.413E-07	5.178E-07	5.412E-07
NNW	5.567E-07	5.307E-07	5.067E-07	4.846E-07	4.642E-07

Table A-3 (Cont.)
Atmospheric Dispersion (χ/Q) as a Function of Distance (s/m^3)

SECTOR	3.2 (MILES)	3.3 (MILES)	3.4 (MILES)	3.5 (MILES)	3.6 (MILES)
N	4.563E-07	4.379E-07	4.208E-07	4.047E-07	3.899E-07
NNE	2.820E-07	2.702E-07	2.592E-07	2.489E-07	2.395E-07
NE	1.777E-07	1.700E-07	1.629E-07	1.562E-07	1.501E-07
ENE	1.350E-07	1.290E-07	1.234E-07	1.182E-07	1.135E-07
E	1.208E-07	1.154E-07	1.103E-07	1.056E-07	1.013E-07
ESE	8.958E-08	8.550E-08	8.173E-08	7.821E-08	7.499E-08
SE	8.606E-08	8.213E-08	7.849E-08	7.510E-08	7.200E-08
SSE	7.441E-08	7.105E-08	6.794E-08	6.503E-08	6.237E-08
S	7.307E-08	6.980E-08	6.678E-08	6.395E-08	6.136E-08
SSW	7.546E-08	7.212E-08	6.902E-08	6.613E-08	6.348E-08
SW	1.176E-07	1.125E-07	1.077E-07	1.033E-07	9.922E-08
WSW	2.410E-07	2.308E-07	2.214E-07	2.125E-07	2.044E-07
W	5.631E-07	5.406E-07	5.196E-07	4.999E-07	4.818E-07
WNW	7.409E-07	7.118E-07	6.848E-07	6.593E-07	6.359E-07
NW	5.192E-07	4.987E-07	4.797E-07	4.618E-07	4.454E-07
NNW	4.452E-07	4.276E-07	4.112E-07	3.958E-07	3.817E-07

SECTOR	3.7 (MILES)	3.8 (MILES)	3.9 (MILES)	4.0 (MILES)	4.1 (MILES)
N	3.759E-07	3.628E-07	3.504E-07	3.388E-07	2.981E-07
NNE	2.306E-07	2.222E-07	2.144E-07	2.070E-07	1.819E-07
NE	1.444E-07	1.390E-07	1.339E-07	1.292E-07	1.247E-07
ENE	1.090E-07	1.048E-07	1.009E-07	9.718E-08	9.373E-08
E	9.722E-08	9.342E-08	8.987E-08	8.653E-08	8.341E-08
ESE	7.196E-08	6.912E-08	6.647E-08	6.399E-08	6.166E-08
SE	6.908E-08	6.635E-08	6.380E-08	6.140E-08	5.378E-08
SSE	5.987E-08	5.753E-08	5.533E-08	5.328E-08	5.135E-08
S	5.892E-08	5.664E-08	5.451E-08	5.251E-08	5.063E-08
SSW	6.098E-08	5.865E-08	5.646E-08	5.441E-08	5.248E-08
SW	9.537E-08	9.178E-08	8.841E-08	8.525E-08	8.228E-08
WSW	1.967E-07	1.896E-07	1.828E-07	1.765E-07	1.462E-07
W	4.646E-07	4.485E-07	4.334E-07	4.191E-07	3.043E-07
WNW	6.137E-07	6.929E-07	5.733E-07	5.548E-07	4.180E-07
NW	4.298E-07	4.151E-07	4.013E-07	3.883E-07	3.761E-07
NNW	3.682E-07	3.556E-07	3.438E-07	3.326E-07	2.928E-07

Table A-3 (Cont.)
Atmospheric Dispersion (χ/Q) as a Function of Distance (s/m^3)

SECTOR	4.2 (MILES)	4.3 (MILES)	4.4 (MILES)	4.5 (MILES)	4.6 (MILES)
N	2.887E-07	2.798E-07	2.714E-07	2.634E-07	2.559E-07
NNE	1.759E-07	1.703E-07	1.650E-07	1.599E-07	1.552E-07
NE	1.205E-07	1.166E-07	1.128E-07	1.093E-07	1.059E-07
ENE	9.047E-08	8.740E-08	8.451E-08	8.176E-08	7.921E-08
E	8.046E-08	7.769E-08	7.508E-08	7.260E-08	7.030E-08
ESE	5.946E-08	5.740E-08	5.545E-08	5.361E-08	5.189E-08
SE	5.186E-08	5.005E-08	4.835E-08	4.673E-08	4.523E-08
SSE	4.954E-08	4.783E-08	4.622E-08	4.469E-08	4.327E-08
S	4.886E-08	4.719E-08	4.562E-08	4.413E-08	4.274E-08
SSW	5.067E-08	4.896E-08	4.735E-08	4.581E-08	4.439E-08
SW	7.948E-08	7.684E-08	7.435E-08	7.198E-08	6.978E-08
WSW	1.413E-07	1.368E-07	1.325E-07	1.284E-07	1.246E-07
W	2.948E-07	2.858E-07	2.773E-07	2.691E-07	2.616E-07
WNW	4.051E-07	3.930E-07	3.815E-07	3.706E-07	3.603E-07
NW	3.645E-07	3.536E-07	3.432E-07	3.333E-07	3.241E-07
NNW	2.837E-07	2.752E-07	2.671E-07	2.593E-07	2.521E-07

SECTOR	4.7 (MILES)	4.8 (MILES)	4.9 (MILES)	5.0 (MILES)
N	2.487E-07	2.419E-07	2.354E-07	2.292E-07
NNE	1.507E-07	1.464E-07	1.423E-07	1.384E-07
NE	1.028E-07	9.975E-08	9.689E-08	9.416E-08
ENE	7.676E-08	7.443E-08	7.223E-08	7.014E-08
E	6.809E-08	6.600E-08	6.402E-08	6.214E-08
ESE	5.025E-08	4.869E-08	4.722E-08	4.582E-08
SE	4.379E-08	4.244E-08	4.115E-08	3.992E-08
SSE	4.191E-08	4.063E-08	3.941E-08	3.825E-08
S	4.141E-08	4.015E-08	3.896E-08	3.782E-08
SSW	4.302E-08	4.173E-08	4.050E-08	3.934E-08
SW	6.767E-08	6.567E-08	6.377E-08	6.196E-08
WSW	1.210E-07	1.175E-07	1.142E-07	1.110E-07
W	2.543E-07	2.474E-07	2.408E-07	2.345E-07
WNW	3.505E-07	3.411E-07	3.322E-07	3.237E-07
NW	3.152E-07	3.068E-07	2.987E-07	2.910E-07
NNW	2.452E-07	2.336E-07	2.323E-07	2.263E-07

Table A-4
Atmospheric Dispersion (D/Q) as a Function of Distance (m^{-2})

SECTOR	0.2 (MILES)	0.3 (MILES)	0.4 (MILES)	0.5 (MILES)	0.6 (MILES)
N	1.396E-07	7.578E-08	4.836E-08	3.383E-08	2.516E-08
NNE	1.107E-07	6.008E-08	3.834E-08	2.682E-08	1.995E-08
NE	9.733E-08	5.284E-08	3.372E-08	2.359E-08	1.755E-08
ENE	1.067E-07	5.795E-08	3.698E-08	2.587E-08	1.924E-08
E	1.184E-07	6.429E-08	4.103E-08	2.870E-08	2.135E-08
ESE	8.865E-08	4.813E-08	3.071E-08	2.149E-08	1.598E-08
SE	9.402E-08	5.105E-08	3.258E-08	2.279E-08	1.695E-08
SSE	1.338E-07	7.266E-08	4.637E-08	3.244E-08	2.413E-08
S	1.429E-07	7.757E-08	4.951E-08	3.463E-08	2.576E-08
SSW	6.094E-08	3.309E-08	2.111E-08	1.477E-08	1.099E-08
SW	7.267E-08	3.945E-08	2.518E-08	1.761E-08	1.310E-08
WSW	7.117E-08	3.864E-08	2.466E-08	1.725E-08	1.283E-08
W	7.129E-08	3.870E-08	2.470E-08	1.728E-08	1.285E-08
WNW	6.970E-08	3.784E-08	2.415E-08	1.689E-08	1.256E-08
NW	8.904E-08	4.834E-08	3.085E-08	2.158E-08	1.605E-08
NNW	9.623E-08	5.225E-08	3.334E-08	2.332E-08	1.735E-08

SECTOR	0.7 (MILES)	0.8 (MILES)	0.9 (MILES)	1.0 (MILES)	1.1 (MILES)
N	1.954E-08	1.560E-08	1.277E-08	1.068E-08	5.545E-09
NNE	1.549E-08	1.237E-08	1.013E-08	8.465E-09	4.945E-09
NE	1.362E-08	1.088E-08	8.907E-09	7.445E-09	4.350E-09
ENE	1.494E-08	1.193E-08	9.768E-09	8.164E-09	4.770E-09
E	1.658E-08	1.323E-08	1.084E-08	9.058E-09	5.292E-09
ESE	1.241E-08	9.905E-09	8.112E-09	6.781E-09	3.961E-09
SE	1.316E-08	1.051E-08	8.605E-09	7.192E-09	3.361E-09
SSE	1.874E-08	1.496E-08	1.225E-08	1.024E-08	3.480E-09
S	2.000E-08	1.597E-08	1.308E-08	1.093E-08	4.128E-09
SSW	8.531E-09	6.810E-09	5.577E-09	4.662E-09	2.521E-09
SW	1.017E-08	8.120E-09	6.651E-09	5.559E-09	2.598E-09
WSW	9.963E-09	7.953E-09	6.513E-09	5.444E-09	2.678E-09
W	9.980E-09	7.966E-09	6.524E-09	5.453E-09	2.832E-09
WNW	9.757E-09	7.788E-09	6.379E-09	5.332E-09	2.932E-09
NW	1.246E-08	9.949E-09	8.148E-09	6.811E-09	3.745E-09
NNW	1.347E-08	1.075E-08	8.807E-09	7.361E-09	4.047E-09

Table A-4 (Cont.)
Atmospheric Deposition (D/Q) as a Function of Distance (m^{-2})

SECTOR	1.2 (MILES)	1.3 (MILES)	1.4 (MILES)	1.5 (MILES)	1.6 (MILES)
N	4.777E-09	4.163E-09	3.664E-09	3.252E-09	2.910E-09
NNE	4.260E-09	3.713E-09	3.268E-09	2.900E-09	2.595E-09
NE	3.747E-09	3.265E-09	2.874E-09	2.551E-09	2.283E-09
ENE	4.109E-09	3.581E-09	3.151E-09	2.797E-09	2.503E-09
E	4.559E-09	3.973E-09	3.497E-09	3.104E-09	2.777E-09
ESE	3.413E-09	2.974E-09	2.617E-09	2.323E-09	2.079E-09
SE	2.896E-09	2.524E-09	2.221E-09	1.971E-09	1.764E-09
SSE	2.998E-09	2.612E-09	2.299E-09	2.041E-09	1.826E-09
S	3.556E-09	3.099E-09	2.727E-09	2.421E-09	2.166E-09
SSW	2.172E-09	1.892E-09	1.666E-09	1.478E-09	1.323E-09
SW	2.238E-09	1.950E-09	1.717E-09	1.524E-09	1.363E-09
WSW	2.307E-09	2.011E-09	1.770E-09	1.571E-09	1.406E-09
W	2.440E-09	2.126E-09	1.871E-09	1.661E-09	1.486E-09
WNW	2.525E-09	2.201E-09	1.937E-09	1.719E-09	1.538E-09
NW	3.226E-09	2.811E-09	2.474E-09	2.196E-09	1.965E-09
NNW	3.487E-09	3.039E-09	2.674E-09	2.374E-09	2.124E-09

SECTOR	1.7 (MILES)	1.8 (MILES)	1.9 (MILES)	2.0 (MILES)	2.1 (MILES)
N	2.619E-09	2.371E-09	2.158E-09	1.973E-09	1.812E-09
NNE	2.336E-09	2.115E-09	1.925E-09	1.760E-09	1.616E-09
NE	2.055E-09	1.860E-09	1.693E-09	1.548E-09	1.292E-09
ENE	2.253E-09	2.040E-09	1.856E-09	1.697E-09	1.558E-09
E	2.500E-09	2.263E-09	2.059E-09	1.883E-09	1.572E-09
ESE	1.871E-09	1.694E-09	1.542E-09	1.410E-09	1.294E-09
SE	1.583E-09	1.437E-09	1.308E-09	1.196E-09	1.098E-09
SSE	1.644E-09	1.488E-09	1.354E-09	1.238E-09	7.816E-10
S	1.950E-09	1.765E-09	1.606E-09	1.469E-09	6.743E-10
SSW	1.191E-09	1.078E-09	9.810E-10	8.969E-10	5.883E-10
SW	1.227E-09	1.111E-09	1.011E-09	9.244E-10	8.488E-10
WSW	1.265E-09	1.145E-09	1.042E-09	9.530E-10	1.352E-09
W	1.338E-09	1.211E-09	1.102E-09	1.008E-09	1.430E-09
WNW	1.385E-09	1.254E-09	1.141E-09	1.043E-09	1.393E-09
NW	1.769E-09	1.601E-09	1.457E-09	1.333E-09	1.223E-09
NNW	1.912E-09	1.731E-09	1.575E-09	1.440E-09	1.322E-09

Table A-4 (Cont.)
Atmospheric Deposition (D/Q) as a Function of Distance (m^{-2})

SECTOR	2.2 (MILES)	2.3 (MILES)	2.4 (MILES)	2.5 (MILES)	2.6 (MILES)
N	1.670E-09	1.544E-09	1.433E-09	1.334E-09	1.245E-09
NNE	1.489E-09	1.377E-09	1.278E-09	1.189E-09	1.110E-09
NE	1.191E-09	1.101E-09	1.022E-09	9.511E-10	8.879E-10
ENE	1.436E-09	1.328E-09	1.233E-09	1.147E-09	1.071E-09
E	1.449E-09	1.340E-09	1.243E-09	1.157E-09	1.080E-09
ESE	1.193E-09	1.103E-09	1.024E-09	9.528E-10	8.895E-10
SE	1.012E-09	9.362E-10	8.687E-10	8.085E-10	7.548E-10
SSE	7.204E-10	6.663E-10	6.183E-10	5.754E-10	5.372E-10
S	6.215E-10	5.749E-10	5.334E-10	4.964E-10	4.634E-10
SSW	5.422E-10	5.015E-10	4.653E-10	4.331E-10	4.043E-10
SW	7.823E-10	7.236E-10	6.714E-10	6.249E-10	5.834E-10
WSW	1.246E-09	1.153E-09	1.070E-09	9.956E-10	9.294E-10
W	1.318E-09	1.219E-09	1.131E-09	1.053E-09	9.827E-10
WNW	1.284E-09	1.188E-09	1.102E-09	1.026E-09	9.575E-10
NW	1.128E-09	1.043E-09	9.678E-10	9.007E-10	8.409E-10
NNW	1.219E-09	1.127E-09	1.046E-09	9.735E-10	9.089E-10

SECTOR	2.7 (MILES)	2.8 (MILES)	2.9 (MILES)	3.0 (MILES)	3.1 (MILES)
N	1.165E-09	1.092E-09	1.026E-09	9.666E-10	9.120E-10
NNE	1.039E-09	9.742E-10	9.155E-10	8.621E-10	8.134E-10
NE	8.307E-10	7.789E-10	7.320E-10	6.893E-10	6.504E-10
ENE	1.002E-09	9.396E-10	8.830E-10	8.315E-10	7.845E-10
E	1.011E-09	9.477E-10	8.906E-10	8.387E-10	7.913E-10
ESE	8.322E-10	7.804E-10	7.334E-10	6.906E-10	5.923E-10
SE	7.061E-10	6.622E-10	6.223E-10	5.860E-10	5.529E-10
SSE	5.026E-10	4.713E-10	4.429E-10	4.171E-10	3.935E-10
S	4.336E-10	4.066E-10	3.821E-10	3.598E-10	3.395E-10
SSW	3.782E-10	3.547E-10	3.333E-10	3.139E-10	2.961E-10
SW	5.458E-10	5.118E-10	4.810E-10	4.529E-10	4.273E-10
WSW	8.695E-10	8.154E-10	7.663E-10	7.216E-10	5.607E-10
W	9.194E-10	8.621E-10	8.102E-10	7.630E-10	6.775E-10
WNW	8.958E-10	8.400E-10	7.894E-10	7.434E-10	7.890E-10
NW	7.867E-10	7.377E-10	6.933E-10	6.528E-10	6.719E-10
NNW	8.503E-10	7.973E-10	7.493E-10	7.056E-10	6.657E-10

Table A-4 (Cont.)
Atmospheric Deposition (D/Q) as a Function of Distance (m^{-2})

SECTOR	3.2 (MILES)	3.3 (MILES)	3.4 (MILES)	3.5 (MILES)	3.6 (MILES)
N	8.620E-10	8.161E-10	7.739E-10	7.347E-10	6.991E-10
NNE	7.688E-10	7.279E-10	6.902E-10	6.552E-10	6.235E-10
NE	6.147E-10	5.820E-10	5.518E-10	5.239E-10	4.985E-10
ENE	7.415E-10	7.020E-10	6.657E-10	6.320E-10	6.014E-10
E	7.479E-10	7.081E-10	6.714E-10	6.374E-10	6.066E-10
ESE	5.598E-10	5.300E-10	5.026E-10	4.771E-10	4.541E-10
SE	5.225E-10	4.947E-10	4.691E-10	4.454E-10	4.238E-10
SSE	3.719E-10	3.521E-10	3.339E-10	3.170E-10	3.016E-10
S	3.209E-10	3.038E-10	2.880E-10	2.735E-10	2.602E-10
SSW	2.799E-10	2.650E-10	2.513E-10	2.386E-10	2.270E-10
SW	4.039E-10	3.824E-10	3.626E-10	3.442E-10	3.276E-10
WSW	5.299E-10	5.017E-10	4.757E-10	4.516E-10	4.298E-10
W	6.403E-10	6.062E-10	5.749E-10	5.458E-10	5.193E-10
WNW	7.457E-10	7.060E-10	6.695E-10	6.356E-10	6.048E-10
NW	6.351E-10	6.013E-10	5.702E-10	5.413E-10	5.151E-10
NNW	6.292E-10	5.957E-10	5.649E-10	5.363E-10	5.103E-10

SECTOR	3.7 (MILES)	3.8 (MILES)	3.9 (MILES)	4.0 (MILES)	4.1 (MILES)
N	6.657E-10	6.347E-10	6.059E-10	5.791E-10	5.036E-10
NNE	5.937E-10	5.661E-10	5.404E-10	5.165E-10	4.492E-10
NE	4.747E-10	4.526E-10	4.321E-10	4.129E-10	3.951E-10
ENE	5.727E-10	5.460E-10	5.212E-10	4.981E-10	4.766E-10
E	5.776E-10	5.507E-10	5.257E-10	5.024E-10	4.807E-10
ESE	4.324E-10	4.122E-10	3.935E-10	3.761E-10	3.598E-10
SE	4.036E-10	3.848E-10	3.673E-10	3.510E-10	3.053E-10
SSE	2.872E-10	2.739E-10	2.614E-10	2.498E-10	2.390E-10
S	2.478E-10	2.363E-10	2.255E-10	2.155E-10	2.062E-10
SSW	2.162E-10	2.061E-10	1.968E-10	1.880E-10	1.799E-10
SW	3.119E-10	2.974E-10	2.839E-10	2.713E-10	2.596E-10
WSW	4.093E-10	3.902E-10	3.725E-10	3.560E-10	2.919E-10
W	4.945E-10	4.715E-10	4.501E-10	4.302E-10	3.087E-10
WNW	5.759E-10	5.491E-10	5.242E-10	5.010E-10	3.728E-10
NW	4.905E-10	4.677E-10	4.464E-10	4.266E-10	4.082E-10
NNW	4.895E-10	4.633E-10	4.423E-10	4.227E-10	3.676E-10

Table A-4 (Cont.)
Atmospheric Deposition (D/Q) as a Function of Distance (m^{-2})

SECTOR	4.2 (MILES)	4.3 (MILES)	4.4 (MILES)	4.5 (MILES)	4.6 (MILES)
N	4.823E-10	4.624E-10	4.437E-10	4.260E-10	4.097E-10
NNE	4.302E-10	4.124E-10	3.957E-10	3.800E-10	3.654E-10
NE	3.784E-10	3.627E-10	3.480E-10	3.342E-10	3.214E-10
ENE	4.564E-10	4.375E-10	4.198E-10	4.031E-10	3.877E-10
E	4.603E-10	4.413E-10	4.234E-10	4.066E-10	3.910E-10
ESE	3.446E-10	3.303E-10	3.170E-10	3.044E-10	2.927E-10
SE	2.924E-10	2.803E-10	2.690E-10	2.583E-10	2.484E-10
SSE	2.289E-10	2.195E-10	2.106E-10	2.022E-10	1.944E-10
S	1.975E-10	1.893E-10	1.817E-10	1.744E-10	1.677E-10
SSW	1.723E-10	1.652E-10	1.585E-10	1.522E-10	1.463E-10
SW	2.486E-10	2.383E-10	2.287E-10	2.196E-10	2.112E-10
WSW	2.796E-10	2.680E-10	2.572E-10	2.469E-10	2.375E-10
W	2.956E-10	2.834E-10	2.719E-10	2.611E-10	2.511E-10
WNW	3.570E-10	3.422E-10	3.284E-10	3.153E-10	3.032E-10
NW	3.909E-10	3.747E-10	3.596E-10	3.453E-10	3.320E-10
NNW	3.521E-10	3.375E-10	3.239E-10	3.110E-10	2.991E-10

SECTOR	4.7 (MILES)	4.8 (MILES)	4.9 (MILES)	5.0 (MILES)
N	3.941E-10	3.795E-10	3.656E-10	3.525E-10
NNE	3.515E-10	3.384E-10	3.261E-10	3.144E-10
NE	3.092E-10	2.977E-10	2.868E-10	2.765E-10
ENE	3.729E-10	3.591E-10	3.460E-10	3.336E-10
E	3.762E-10	3.622E-10	3.489E-10	3.364E-10
ESE	2.816E-10	2.711E-10	2.612E-10	2.519E-10
SE	2.389E-10	2.300E-10	2.216E-10	2.137E-10
SSE	1.871E-10	1.801E-10	1.735E-10	1.673E-10
S	1.614E-10	1.554E-10	1.497E-10	1.443E-10
SSW	1.408E-10	1.355E-10	1.306E-10	1.259E-10
SW	2.031E-10	1.956E-10	1.884E-10	1.817E-10
WSW	2.285E-10	2.199E-10	2.119E-10	2.043E-10
W	2.415E-10	2.326E-10	2.241E-10	2.160E-10
WNW	2.917E-10	2.809E-10	2.706E-10	2.609E-10
NW	3.194E-10	3.075E-10	2.963E-10	2.857E-10
NNW	2.877E-10	2.770E-10	2.669E-10	2.573E-10

Appendix B

LOWER LIMIT OF DETECTION

The lower limit of detection (LLD) is the smallest concentration of radioactive material in a sample that will be detected with a 95 percent probability with a 5 percent probability of falsely concluding that a blank observation represents a "real" signal.

The LLD is defined as an "a priori" (before the fact) limit representing the capability of a measurement system and not as an "a posteriori" (after the fact) limit for a particular measurement.

For a measurement system (which may include radiochemical separation) based on gross beta, gross alpha, liquid scintillation, or other analyses where a background count determined by a separate measurement with no sample (or blank sample) is subtracted from the gross sample count to obtain a net count due to sample activity:

$$LLD = \frac{3.3\left(\frac{r_b}{t_s} + \frac{r_b}{t_b}\right)^{1/2}}{(C)(E)(V)(Y_c)\exp(-\lambda\,\Delta t)} \qquad \text{(B-1)}$$

Where:

LLD = the "a priori" lower limit of detection, as defined above;

C = the conversion factor of transformations per unit time per uCi or pCi;

E = the detector efficiency;

r_b = the background count rate in units of transformations per unit time;

t_b = the counting time of background;

t_s = the counting time of the sample;

V = the sample size, in units of mass or volume;

Y_c = the fractional radiochemical sample collection or concentration yield (when applicable);

Δt = for plant effluents, the elapsed time between the midpoint of sample collection and time of counting; for environmental samples, the elapsed time between sample collection (or end of the sample collection period) and time of counting;

λ = the radioactive decay constant for the radionuclide in question.

For the purpose of routine analyses, count times for both the sample(s) and background(s) are equal. This satisfies the given ODCM Appendix C control for lower limit of detection definition, as the numerator of equation B-1 simplifies to 4.66 S_b, where S_b is the standard deviation of the background count rate or the count rate of a blank sample, as appropriate.

For gamma ray spectroscopy analyses:

$$LLD = \frac{L_D \quad \exp\left(0.693 \frac{\Delta t}{t^{1/2}}\right)}{(C)(E)(t)(V)(Y_C)(Y_\gamma)} \qquad \text{(B-2)}$$

Where:

LLD = the lower limit of detection, in µCi or pCi per unit mass or volume;

C = the conversion factor of transformations per unit time per µCi or pCi;

E = the detector efficiency for the energy in question;

t = the data collection (counting) time of sample;

$t^{1/2}$ = the half-life of the radionuclide in question;

V = the sample size, in units of mass or volume;

Y_C = the fractional radiochemical, sample collection, or concentration yield (when applicable);

Y_λ = the yield of the gamma ray in question;

Δt = for plant effluents the elapsed time between midpoint of sample collection and time of counting; for environmental samples, the elapsed time between sample collection (or end of the sample collection period) and the time of counting;

L_d = the detection limit

$$= k^2 + 2k\left(\frac{N}{2n}\left(1 + \frac{N}{2n}\right)(B_1 + B_2) + I + \sigma_I^2\right)^{1/2} \qquad \text{(B-3)}$$

Where:

B_1 = the number of counts in "n" background channels below the peak due to Compton scattering, etc., determined at the same time a photopeak is measured;

B_2 = the number of counts in the "n" background channels above the peak;

k = an abscissa of the normal distribution corresponding to confidence level,

= 1.645 at a confidence level of 95%;

I = the measured value of interference in the photopeak of interest due to environmental background, detector contamination, etc., determined by a separate measurement with no sample;

N = the number of channels in the photopeak of interest;

n = the number of background channels on each side of the photopeak of interest;

σ_I = the standard deviation of I.

Typical values of E, V, Y, and Δt shall be used in the calculation.

In calculating the LLD for a radionuclide determined by gamma-ray spectrometry, the background shall include the typical contributions of other radionuclides normally present in the samples (e.g., potassium-40 in milk samples).

Analyses shall be performed in such a manner that the LLD's listed in Tables 4.11.1.1.1-1, 4.11.2.1.2-1, and 4.12.1-1 of the ODCM Appendix C controls for the Perry Nuclear Power Plant will be achieved under routine conditions. Occasionally, background fluctuations, unavoidably small sample sizes, the presence of interfering nuclides, or other uncontrollable circumstances may render these LLDs unachievable. In such cases, the contributing factors will be identified and described in the Annual Radiological Environmental Operating Report.

Appendix C

Controls

INDEX

DEFINITIONS

SECTION

1.0 DEFINITIONS — PAGE

ACTIONS..... 1-1

CHANNEL CALIBRATION..... 1-1

CHANNEL CHECK..... 1-1

CHANNEL FUNCTIONAL TEST..... 1-1

DOSE EQUIVALENT I-131..... 1-1

FREQUENCY NOTATION..... 1-2

GASEOUS RADWASTE TREATMENT (OFF-GAS) SYSTEM..... 1-2

LIQUID RADWASTE TREATMENT SYSTEM..... 1-2

MEMBER(S) OF THE PUBLIC..... 1-2

MODE..... 1-2

OFFSITE DOSE CALCULATION MANUAL..... 1-2

OPERABLE - OPERABILITY..... 1-3

PURGE - PURGING..... 1-3

RATED THERMAL POWER..... 1-3

REPORTABLE EVENT..... 1-3

SITE BOUNDARY..... 1-3

SOURCE CHECK..... 1-3

THERMAL POWER..... 1-3

UNRESTRICTED AREA..... 1-3

VENTILATION EXHAUST TREATMENT SYSTEMS..... 1-4

VENTING..... 1-4

Table 1.1, Surveillance Frequency Notation..... 1-5

Table 1.2, MODES..... 1-6

CONTROLS AND SURVEILLANCE REQUIREMENTS

SECTION PAGE

3/4.0 APPLICABILITY 3/4 0-1

3/4.3 INSTRUMENTATION

Radioactive Liquid Effluent Monitoring Instrumentation 3/4 1-1

Table 3.3.7.9-1 Radioactive Liquid Effluent Monitoring Instrumentation 3/4 1-2

Table 4.3.7.9-1 Radioactive Liquid Effluent Monitoring Instrumentation Surveillance Requirements 3/4 1-4

Radioactive Gaseous Effluent Monitoring Instrumentation 3/4 1-6

Table 3.3.7.10-1 Radioactive Gaseous Effluent Monitoring Instrumentation 3/4 1-7

Table 4.3.7.10-1 Radioactive Gaseous Effluent Monitoring Instrumentation Surveillance Requirements 3/4 1-10

3/4.11 RADIOACTIVE EFFLUENTS

3/4.11.1 LIQUID EFFLUENTS

Concentration 3/4 2-1

Table 4.11.1.1.1-1 Radioactive Liquid Waste Sampling and Analysis Program 3/4 2-2

Dose 3/4 2-5

Liquid Radwaste Treatment System 3/4 2-6

3/4.11.2 GASEOUS EFFLUENTS

Dose Rate 3/4 2-7

Table 4.11.2.1.2-1 Radioactive Gaseous Waste Sampling and Analysis Program 3/4 2-8

Dose - Noble Gases 3/4 2-11

Dose - Iodine-131, Iodine-133, Tritium and Radionuclides in Particulate Form 3/4 2-12

CONTROLS AND SURVEILLANCE REQUIREMENTS

SECTION PAGE

RADIOACTIVE EFFLUENTS (Continued)

Gaseous Radwaste (Off-Gas) Treatment..... 3/4 2-13

Ventilation Exhaust Treatment Systems..... 3/4 2-14

3/4.11.4 TOTAL DOSE..... 3/4 2-15

3/4.12 RADIOLOGICAL ENVIRONMENTAL MONITORING

3/4.12.1 MONITORING PROGRAM..... 3/4 3-1

Table 3.12.1-1 Radiological Environmental Monitoring Program..... 3/4 3-3

Table 3.12.1-2 Reporting Levels for Radioactivity Concentrations In Environmental Samples..... 3/4 3-9

Table 4.12.1-1 Maximum Values for the Lower Limits of Detection (LLD) In Environmental Samples..... 3/4 3-10

3/4.12.2 LAND USE CENSUS..... 3/4 3-13

3/4.12.3 INTERLABORATORY COMPARISON PROGRAM..... 3/4 3-14

BASES

SECTION PAGE

3/4.0 APPLICABILITY..... B 3/4 0-1

3/4.3 INSTRUMENTATION

Radioactive Liquid Effluent Monitoring Instrumentation..... B 3/4 1-1

Radioactive Gaseous Effluent Monitoring Instrumentation..... B 3/4 1-1

3/4.11 RADIOACTIVE EFFLUENTS

3/4.11.1 LIQUID EFFLUENTS

Concentration..... B 3/4 2-1

Dose..... B 3/4 2-1

Liquid Radwaste Treatment System..... B 3/4 2-2

BASES

SECTION PAGE

3/4.11 RADIOACTIVE EFFLUENTS (Continued)

3/4.11.2 GASEOUS EFFLUENTS

Dose Rate..... B 3/4 2-3

Dose - Noble Gases..... B 3/4 2-3

Dose - Iodine-131, Iodine-133, Tritium and Radionuclides in Particulate Form..... B 3/4 2-4

Gaseous Radwaste Treatment (Offgas) System and Ventilation Exhaust Treatment Systems..... B 3/4 2-5

3/4.11.4 TOTAL DOSE..... B 3/4 2-6

3/4.12 RADIOLOGICAL ENVIRONMENTAL MONITORING

3/4.12.1 MONITORING PROGRAM..... B 3/4 3-1

3/4.12.2 LAND USE CENSUS..... B 3/4 3-1

3/4.12.3 INTERLABORATORY COMPARISON PROGRAM..... B 3/4 3-2

ADMINISTRATIVE CONTROLS

SECTION PAGE

6.9 REPORTING REQUIREMENTS

6.9.1.6 Annual Radiological Environmental Operating Report..... 4-1

6.9.1.7 Annual Radioactive Effluent Release Report..... 4-2

6.9.2 SPECIAL REPORTS..... 4-3

6.10 RECORD RETENTION..... 4-3

6.15 MAJOR CHANGES TO RADIOACTIVE WASTE TREATMENT SYSTEMS..... 4-3

SECTION 1.0

DEFINITIONS

1.0 DEFINITIONS

The following terms are defined so that uniform interpretation of these Controls may be achieved. The defined terms appear in capitalized type and shall be applicable throughout these Controls.

ACTIONS

ACTIONS shall be that part of a Control that prescribes remedial measures to be taken under designated conditions.

CHANNEL CALIBRATION

A CHANNEL CALIBRATION shall be the adjustment, as necessary, of the channel output such that it responds within the necessary range and accuracy to known values of the parameter which the channel monitors. The CHANNEL CALIBRATION shall encompass the entire channel, including the required sensor, alarm, display and trip functions, and shall include the CHANNEL FUNCTIONAL TEST. The CHANNEL CALIBRATION may be performed by means of any series of sequential, overlapping or total channel steps so that the entire channel is calibrated.

CHANNEL CHECK

A CHANNEL CHECK shall be the qualitative assessment, by observation of channel behavior during operation. This determination shall include, where possible, comparison of the channel indication and status to other indications or status derived from independent instrument channels measuring the same parameter.

CHANNEL FUNCTIONAL TEST

A CHANNEL FUNCTIONAL TEST shall be the injection of a simulated or actual signal into the channel as close to the sensor as practicable to verify OPERABILITY, including required alarm, interlock, display, and trip functions and channel failure trips. The CHANNEL FUNCTIONAL TEST may be performed by means of any series of sequential, overlapping, or total channel steps so that the entire channel is tested.

DOSE EQUIVALENT I-131

DOSE EQUIVALENT I-131 shall be that concentration of I-131 (microcuries per gram) that alone would produce the same thyroid dose as the quantity and isotopic mixture of I-131, I-132, I-133, I-134, and I-135 actually present. The thyroid dose conversion factors used for this calculation shall be those listed in Table III of TID-14844, AEC, 1962, "Calculation of Distance Factors for Power and Test Reactor Sites."

DEFINITIONS

FREQUENCY NOTATION

The FREQUENCY NOTATION specified for the performance of Surveillance Requirements shall correspond to the intervals defined in Table 1.1.

GASEOUS RADWASTE TREATMENT (OFF-GAS) SYSTEM

THE GASEOUS RADWASTE TREATMENT (OFF-GAS) SYSTEM is the system designed and installed to reduce radioactive gaseous effluents by collecting primary coolant system off-gasses from the main condenser evacuation system and providing for delay or holdup for the purpose of reducing the total radioactivity prior to release to the environment.

LIQUID RADWASTE TREATMENT SYSTEM

The LIQUID RADWASTE TREATMENT SYSTEM is any process or control equipment used to reduce the amount or concentration of liquid radioactive materials prior to their discharge to UNRESTRICTED AREAS. It involves all the installed and available liquid radwaste management system equipment, as well as their controls, power instrumentation, and services that make the system functional.

MEMBER OF THE PUBLIC

MEMBER OF THE PUBLIC means any individual except when that individual is receiving an OCCUPATIONAL DOSE.

MODE

A MODE shall correspond to any one inclusive combination of mode switch position, average reactor coolant temperature, and reactor vessel head closure bolt tensioning specified in Table 1.2 with fuel in the reactor vessel.

OCCUPATIONAL DOSE

OCCUPATIONAL DOSE means the dose received by an individual in the course of employment in which the individual's assigned duties involve exposure to radiation or to radioactive material from licensed and unlicensed sources of radiation, whether in the possession of the licensee or other person. Occupational dose does not include doses received from background radiation, from any medical administration the individual has received, from exposure to individuals administered radioactive material and released under § 35.75, from voluntary participation in medical research programs, or as a member of the public.

DEFINITIONS

OFFSITE DOSE CALCULATION MANUAL (ODCM)

The OFFSITE DOSE CALCULATION MANUAL shall contain the methodology and parameters used in the calculation of offsite doses resulting from radioactive gaseous and liquid effluents, in the calculation of gaseous and liquid effluent monitoring alarm/trip setpoints, and in the conduct of the radiological environmental monitoring program. The ODCM shall also contain the Radioactive Effluent Controls Program required by Technical Specification 5.5.4, the Radiological Environmental Monitoring Programs and descriptions of the information that should be included in the Annual Radioactive Effluent Release Report required by Technical Specifications 5.6.2 and 5.6.3.

OPERABLE - OPERABILITY

A system, subsystem, division, component or device shall be OPERABLE or have OPERABILITY when it is capable of performing its specified function(s) and when all necessary attendant instrumentation, controls, normal or emergency electrical power, cooling and seal water, lubrication and other auxiliary equipment that are required for the system, subsystem, division, component or device to perform its specified safety function(s) are also capable of performing their related support function(s).

PURGE - PURGING

PURGE OR PURGING is the controlled process of discharging air or gas from a confinement to maintain temperature, pressure, humidity, concentration or other operating condition, in such a manner that replacement air or gas is required to purify the confinement.

RATED THERMAL POWER

RATED THERMAL POWER shall be a total reactor core heat transfer rate to the reactor coolant of 3758 MWT.

REPORTABLE EVENT

A REPORTABLE EVENT shall be any of those conditions specified in 10CFR50.73.

SITE BOUNDARY

The SITE BOUNDARY shall be that line beyond which the land is neither owned, nor leased, nor otherwise controlled by the licensee.

SOURCE CHECK

A SOURCE CHECK shall be the qualitative assessment of channel response when the channel sensor is exposed to a source of increased radioactivity.

THERMAL POWER

THERMAL POWER shall be the total reactor core heat transfer rate to the reactor coolant.

DEFINITIONS

UNRESTRICTED AREA

An UNRESTRICTED AREA shall be any area at or beyond the SITE BOUNDARY access to which is not controlled by the licensee for purposes of protection of MEMBERS OF THE PUBLIC from exposure to radiation and radioactive materials, or any area within the SITE BOUNDARY used for residential quarters or for industrial, commercial, institutional, and/or recreational purposes.

VENTILATION EXHAUST TREATMENT SYSTEMS

A VENTILATION EXHAUST TREATMENT SYSTEM is any system designed and installed to reduce gaseous radioiodine or radioactive material in particulate form in effluents by passing ventilation or vent exhaust gases through charcoal adsorbers and/or HEPA filters for the purpose of removing iodines or particulates from the gaseous exhaust stream prior to the release to the environment (such a system is not considered to have any effect on noble gas effluents). Engineered Safety Feature (ESF) atmospheric cleanup systems are not considered to be VENTILATION EXHAUST TREATMENT SYSTEM components provided the ESF system is not utilized to treat normal releases.

VENTING

VENTING is the controlled process of discharging air or gas from a confinement to maintain temperature, pressure, humidity, concentration or other operating condition, in such a manner that replacement air or gas is not provided or required during VENTING. Vent, used in system names, does not imply a VENTING process.

TABLE 1.1

SURVEILLANCE FREQUENCY NOTATION

NOTATION	FREQUENCY
S	At least once per 12 hours.
D	At least once per 24 hours.
W	At least once per 7 days.
M	At least once per 31 days.
Q	At least once per 92 days.
SA	At least once per 184 days.
A	At least once per 366 days.
R	At least once per 24 months.
S/U	Prior to each reactor startup.
P	Completed prior to each release.
4H	Every 4 hours when required.
N.A.	Not applicable.

TABLE 1.2

MODES

MODE	TITLE	REACTOR MODE SWITCH POSITION	AVERAGE REACTOR COOLANT TEMPERATURE
1	POWER OPERATION	Run	NA
2	STARTUP	Refuel(a) or Startup/Hot Standby	NA
3	HOT SHUTDOWN(a)	Shutdown	> 200°F
4	COLD SHUTDOWN(a)	Shutdown	≤ 200°F
5	REFUELING(b)	Shutdown or Refuel	NA

(a) All reactor vessel head closure bolts fully tensioned.

(b) One or more reactor vessel head closure bolts less than fully tensioned.

SECTIONS 3.0 and 4.0

CONTROLS

AND

SURVEILLANCE REQUIREMENTS

3/4.0 APPLICABILITY

CONTROLS

3.0.1 Controls shall be met during the MODES or other conditions specified in the Applicability except as provided in Control 3.0.2.

3.0.2 Upon discovery of a failure to meet a Control, the requirements of the Actions shall be met except as provided in Control 3.0.5. If the Control is met or is no longer applicable prior to expiration of the specified time interval(s), completion of the Action(s) is not required, unless otherwise stated.

3.0.3 When a Control is not met and the associated ACTIONS are not met, an associated ACTION is not provided, or if directed by the associated ACTIONS, the unit shall be placed in a MODE or other specified condition in which the Control is not applicable. Action shall be initiated within 1 hour to place the unit, as applicable, in:

a. MODE 2 within 7 hours;
b. MODE 3 within 13 hours; and
c. MODE 4 within 37 hours.

Exceptions to this Control are stated in the individual Controls.

Where corrective measures are completed that permit operation in accordance with the Control or ACTIONS, completion of the actions required by Control 3.0.3 is not required.

Control 3.0.3 is only applicable in MODES 1, 2, and 3.

3.0.4 When a Control is not met, entry into a MODE or other specified condition in the Applicability shall not be made except when the associated ACTIONS to be entered permit continued operation in the MODE or other specified condition in the Applicability for an unlimited period of time. This Control shall not prevent changes in MODES or other specified conditions in the Applicability that are required to comply with ACTIONS, or that are part of a shutdown of the unit.

Exceptions to this Control are stated in the individual Controls. These exceptions allow entry into MODES or other specified conditions in the Applicability when the associated ACTIONS to be entered allow unit operation in the MODE or other specified condition in the Applicability only for a limited period of time.

Control 3.0.4 is only applicable for entry into a MODE or other specified condition in the Applicability in MODES 1, 2, and 3.

3.0.5 Equipment removed from service or declared inoperable to comply with ACTIONS may be returned to service under administrative control solely to perform testing required to demonstrate its OPERABILITY or the OPERABILITY of other equipment. This is an exception to Control 3.0.2 for the system returned to service under administrative control to perform the testing required to demonstrate OPERABILITY.

3/4.0 APPLICABILITY

SURVEILLANCE REQUIREMENT (SR)

4.0.1 SRs shall be met during the MODES or other specified conditions in the Applicability for individual Controls, unless otherwise stated in the SR. Failure to meet a Surveillance, whether such failure is experienced during the performance of the surveillance or between performances of the Surveillance, shall be failure to meet the Control. Failure to perform a Surveillance within the specified Frequency shall be failure to meet the Control except as provided in SR 4.0.3. Surveillances do not have to be performed on inoperable equipment or variables outside specified limits.

4.0.2 The specified frequency for each SR is met if the Surveillance is performed within 1.25 times the interval specified in the frequency, as measured from the previous performance or as measured from the time a specified condition of the frequency is met.

If a completion time for an action requires periodic performance on a "once per ..." basis, the above frequency extension applies to each performance after the initial performance.

Exceptions to this SR are stated in the individual SR's.

4.0.3 If it is discovered that a Surveillance was not performed within its specified frequency, then compliance with the requirement to declare the Control not met may be delayed, from the time of discovery, up to 24 hours or up to the limit of the specified frequency, whichever is less. This delay period is permitted to allow performance of the Surveillance.

If the Surveillance is not performed within the delay period, the Control must immediately be declared not met, and the applicable ACTION(s) must be entered. When the Surveillance is performed within the delay period and the Surveillance is not met, the Control must immediately be declared not met, and the applicable ACTION(s) must be entered.

4.0.4 Entry into a MODE or other specified condition in the Applicability of a Control shall not be made unless the Control's Surveillances have been met within their specified frequency. This provision shall not prevent entry into MODES or other specified conditions in the Applicability that are required to comply with ACTIONS or that are part of a shutdown of the unit.

SR 4.0.4 is only applicable for entry into a MODE or other specified condition in the Applicability in MODES 1, 2, and 3.

3/4.3 INSTRUMENTATION

RADIOACTIVE LIQUID EFFLUENT MONITORING INSTRUMENTATION

CONTROLS

3.3.7.9 In accordance with Perry Nuclear Power Plant Unit 1 TS 5.5.4.a, the radioactive liquid effluent monitoring instrumentation channels shown in Table 3.3.7.9-1 shall be OPERABLE with their alarm/trip setpoints set to ensure that the limits of Control 3.11.1.1 are not exceeded. The alarm/trip setpoints of these channels shall be determined and adjusted in accordance with the OFFSITE DOSE CALCULATION MANUAL (ODCM).

APPLICABILITY: At all times.

ACTION:

a. With a radioactive liquid effluent monitoring instrumentation channel alarm/trip setpoint less conservative than required by the above Control, immediately suspend the release of radioactive liquid effluents monitored by the affected channel or declare the channel inoperable, or change the setpoint so it is acceptably conservative.

b. With less than the minimum number of radioactive liquid effluent monitoring instrumentation channels OPERABLE, take the ACTION shown in Table 3.3.7.9-1. Restore the inoperable instrumentation to OPERABLE status within 30 days and, if unsuccessful, explain why this inoperability was not corrected in a timely manner in the next Annual Radioactive Effluent Release Report.

c. The provisions of Control 3.0.3 are not applicable.

SURVEILLANCE REQUIREMENTS

4.3.7.9 Each radioactive liquid effluent monitoring instrumentation channel shall be demonstrated OPERABLE by performance of the CHANNEL CHECK, SOURCE CHECK, CHANNEL CALIBRATION and CHANNEL FUNCTIONAL TEST operations at the frequencies shown in Table 4.3.7.9-1.

TABLE 3.3.7.9-1

RADIOACTIVE LIQUID EFFLUENT MONITORING INSTRUMENTATION

INSTRUMENT	MINIMUM CHANNELS OPERABLE	ACTION
1. GROSS RADIOACTIVITY MONITORS PROVIDING ALARM AND AUTOMATIC TERMINATION OF RELEASE		
a. Liquid Radwaste Discharge Radiation Monitor - ESW Discharge	1	110
2. GROSS BETA OR GAMMA RADIOACTIVITY MONITORS PROVIDING ALARM BUT NOT PROVIDING AUTOMATIC TERMINATION OF RELEASE		
a. Emergency Service Water Loop A Radiation Monitor	1	111
b. Emergency Service Water Loop B Radiation Monitor	1	111
3. FLOW RATE MEASUREMENT DEVICES		
a. Radwaste High-Flow Discharge Header Flow	1	112
b. Service Water Discharge Header Flow Monitor	1	113
c. Unit 1 Emergency Service Water Header Flow Monitor or individual ESW HX Monitors	1	113
1) Emergency Service Water Flow Monitor, or		
2) Individual RHR, ECC and DG HX Flow Monitors <L02211>		

TABLE 3.3.7.9-1 (Continued)

RADIOACTIVE LIQUID EFFLUENT MONITORING INSTRUMENTATION

ACTION STATEMENTS

ACTION 110 - With the number of channels OPERABLE less than required by the Minimum Channels OPERABLE requirement, effluent releases from this pathway may continue provided that prior to initiating a release:

a. At least two independent samples are analyzed in accordance with Control 4.11.1.1.1, and

b. At least two technically qualified members of the Facility Staff independently verify the release rate calculations and discharge line valving;

Otherwise, suspend release of radioactive effluents via this pathway.

ACTION 111 - With the number of channels OPERABLE less than required by the Minimum Channels OPERABLE requirement, effluent releases via this pathway may continue provided that, at least once per 12 hours, grab samples are collected and analyzed for gross radioactivity (beta or gamma) at a limit of detection of at least 10^{-7} microcuries/ml.

ACTION 112 - With the number of channels OPERABLE less than required by the Minimum Channels OPERABLE requirement, effluent releases via this pathway may continue provided the discharge valve position is verified to be consistent with the flow rate provisions of the release permit at least once per 4 hours during actual releases. Prior to initiating another release, at least two technically qualified members of the Facility Staff shall independently verify the discharge line valving and that the discharge valve position corresponds to the desired flow rate. Otherwise, suspend release of radioactive effluents via this pathway.

ACTION 113 - With the number of channels OPERABLE less than required by the Minimum Channels OPERABLE requirement, effluent releases via this pathway may continue provided the flow rate is estimated at least once per 4 hours during actual releases. Pump performance curves generated in place as well as other curves generated using pump performance may be used to estimate flow.

TABLE 4.3.7.9-1

RADIOACTIVE LIQUID EFFLUENT MONITORING INSTRUMENTATION SURVEILLANCE REQUIREMENTS

INSTRUMENT	CHANNEL CHECK	FLOW CHECK	SOURCE CHECK	CHANNEL CALIBRATION	CHANNEL FUNCTIONAL TEST
1. GROSS RADIOACTIVITY MONITORS PROVIDING ALARM AND AUTOMATIC TERMINATION OF RELEASE					
a. Liquid Radwaste Discharge Radiation Monitor - ESW Discharge	D	N/A	P	R(3)	Q(1)
2. GROSS BETA OR GAMMA RADIOACTIVITY MONITORS PROVIDING ALARM BUT NOT PROVIDING AUTOMATIC TERMINATION OF RELEASE					
a. Emergency Service Water Loop A Radiation Monitor	D	N/A	M	R(3)	Q(2)
b. Emergency Service Water Loop B Radiation Monitor	D	N/A	M	R(3)	Q(2)
3. FLOW RATE MEASUREMENT DEVICES					
a. Radwaste High-Flow Discharge Header Flow	D(4)	N/A	N/A	R	Q
b. Service Water Discharge Header Flow	D(4)	N/A	N/A	R	Q
c. Unit 1 Emergency Service Water Header Flow					
1) Emergency Service Water Flow, or	D(4)	N/A	N/A	R	Q
2) Combination of Individual RHR, ECC & DG HX Flows	D(4)	4H(5)	N/A	N/A	N/A
3) Individual RHR, ECC, & DG HX Flows	N/A	N/A	N/A	R	Q

TABLE 4.3.7.9-1 (Continued)

RADIOACTIVE LIQUID EFFLUENT MONITORING
INSTRUMENTATION SURVEILLANCE REQUIREMENTS

TABLE NOTATION

(1) The CHANNEL FUNCTIONAL TEST shall also demonstrate that automatic isolation of this pathway and control room alarm annunciation occur if any of the following conditions exists:

1. Instrument indicates measured levels above the alarm/trip setpoint.

2. Instrument indicates a downscale failure.

3. Instrument controls not set in operate mode except in high voltage position.

(2) The CHANNEL FUNCTIONAL TEST shall also demonstrate that control room alarm annunciation occurs if any of the following conditions exists:

1. Instrument indicates measured levels above the alarm setpoint.

2. Instrument indicates a downscale failure.

3. Instrument controls not set in operate mode, except in high voltage position.

(3) The initial CHANNEL CALIBRATION shall be performed using one or more of the reference standards certified by the National Bureau of Standards or using standards that have been obtained from suppliers that participate in measurement assurance activities with NBS. These standards shall permit calibrating the system over its intended range of energy and measurement range. For subsequent CHANNEL CALIBRATION, sources that have been related to the initial calibration shall be used.

(4) CHANNEL CHECK shall consist of verifying indication of flow. A CHANNEL CHECK shall be made initially and at least once per 24 hours on days when continuous, periodic or batch releases occurs. Pump performance curves may be used to verify the indication of flow from flow instrumentation.

(5) FLOW CHECK shall consist of verifying indication of flow by summing the individual RHR, ECC and DG heat exchanger flows. A FLOW CHECK shall be made initially, prior to securing ESW pumps, at least once per 4 hours during a Liquid Radwaste discharge, and at least once per 12 hours during operation of ESW pumps.

INSTRUMENTATION

RADIOACTIVE GASEOUS EFFLUENT MONITORING INSTRUMENTATION

CONTROLS

3.3.7.10 In accordance with Perry Nuclear Power Plant Unit 1 TS 5.5.4.a, the radioactive gaseous effluent monitoring instrumentation channels shown in Table 3.3.7.10-1 shall be OPERABLE with their alarm/trip setpoints set to ensure that the limits of Control 3.11.2.1 are not exceeded. The alarm/trip setpoints of applicable channels shall be determined and adjusted in accordance with the methodology and parameters in the ODCM.

APPLICABILITY: As shown in Table 3.3.7.10-1

ACTION:

a. With a radioactive gaseous effluent monitoring instrumentation channel alarm/trip setpoint less conservative than required by the above specification, declare the channel inoperable, or change the setpoint so it is acceptably conservative.

b. With less than the minimum number of radioactive gaseous effluent monitoring instrumentation channels OPERABLE, take the ACTION shown in Table 3.3.7.10-1. Restore the inoperable instrumentation to OPERABLE status within 30 days and, if unsuccessful, explain why this inoperability was not corrected in a timely manner in the next Annual Radioactive Effluent Release Report.

c. The provisions of Control 3.0.3 are not applicable.

SURVEILLANCE REQUIREMENTS

4.3.7.10 Each radioactive gaseous effluent monitoring instrumentation channel shall be demonstrated OPERABLE by performance of the CHANNEL CHECK, SOURCE CHECK, CHANNEL CALIBRATION and CHANNEL FUNCTIONAL TEST operations at the frequencies shown in Table 4.3.7.10-1.

TABLE 3.3.7.10-1

RADIOACTIVE GASEOUS EFFLUENT MONITORING INSTRUMENTATION

INSTRUMENT	MINIMUM CHANNELS OPERABLE	APPLICABILITY	ACTION
1. OFF-GAS VENT RADIATION MONITOR			
a. Noble Gas Activity Monitor	1	*	121
b. Iodine Sampler (1)	1	*	122
c. Particulate Sampler (1)	1	*	122
d. Effluent System Flow Rate Monitor	1	*	123
e. Sampler Flow Rate Monitor (Victoreen Flow Monitor)	1	*	123
2. UNIT 1 VENT RADIATION MONITOR			
a. Noble Gas Activity Monitor <L02211>	1	1, 2, 3 4, 5	121, 125 121
b. Iodine Sampler (1)	1	*	122
c. Particulate Sampler (1)	1	*	122
d. Effluent System Flow Rate Monitor	1	*	123
e. Sampler Flow Rate Monitor (Victoreen Flow Monitor)	1	*	123

(1) This encompasses the isokinetic and Victoreen photohelics.

TABLE 3.3.7.10-1 (Continued)

RADIOACTIVE GASEOUS EFFLUENT MONITORING INSTRUMENTATION

INSTRUMENT	MINIMUM CHANNELS OPERABLE	APPLICABILITY	ACTION
3. UNIT 2 VENT RADIATION MONITOR			
a. Noble Gas Activity Monitor	1	*	121
b. Iodine Sampler (1)	1	*	122
c. Particulate Sampler (1)	1	*	122
d. Effluent System Flow Rate Monitor	1	*	123
e. Sampler Flow Rate Monitor (Victoreen Flow Monitor)	1	*	123
4. TURBINE BUILDING/HEATER BAY VENT RADIATION MONITOR			
a. Noble Gas Activity Monitor <L02211>	1	*	121
b. Iodine Sampler (1)	1	*	122
c. Particulate Sampler (1)	1	*	122
d. Effluent System Flow Rate Monitor	1	*	123
e. Sampler Flow Rate Monitor (Victoreen Flow Monitor)	1	*	123

(1) This encompasses the isokinetic and Victoreen photohelics.

TABLE 3.3.7.10-1 (Continued)

RADIOACTIVE GASEOUS EFFLUENT MONITORING INSTRUMENTATION

TABLE NOTATION

* At all times.

** During main condenser offgas treatment system operation.

ACTION 121 - With the number of channels OPERABLE less than required by the Minimum Channels OPERABLE requirement, effluent releases via this pathway may continue provided grab samples are taken at least once per 12 hours and these samples are analyzed for principal gamma emitters as required by Table 4.11.2.1.2-1.

ACTION 122 - With the number of channels OPERABLE less than required by the Minimum Channels OPERABLE requirement, effluent releases via this pathway may continue provided samples are continuously collected within 4 hours with auxiliary sampling equipment as required by Table 4.11.2.1.2-1. If the inoperability is due to failure of the AMC skid, the Victoreen skid alone can be used as the auxiliary sampling equipment for a maximum of 30 consecutive days. <L02211> Loss of the isokinetic flow monitor constitutes inoperability of particulate and iodine channels (b, c).

ACTION 123 - With the number of channels OPERABLE less than required by the Minimum Channels OPERABLE requirement, effluent release via this pathway may continue provided the flow rate is estimated at least once per 4 hours. This action applies to both the effluent system flow and victoreen sample flow (d, e).

ACTION 124 - NOT USED

ACTION 125 - With the number of channels OPERABLE less than required by the Minimum Channels OPERABLE requirement, except as a result of a non-conservative setpoint, immediately suspend operation of the Containment Vessel and Drywell Purge (M14) system. Prior to resuming M14 System operation, ensure compliance with Control 3.11.2.1 requirements. If Control 3.11.2.1 compliance is met, operation of the M14 System may continue provided grab samples are taken at least once per 12 hours and analyzed for principal gamma emitters, as required by Table 4.11.2.1.2-1.

TABLE 4.3.7.10-1

RADIOACTIVE GASEOUS EFFLUENT MONITORING INSTRUMENTATION SURVEILLANCE REQUIREMENTS

INSTRUMENT	CHANNEL CHECK	SOURCE CHECK	CHANNEL CALIBRATION	CHANNEL FUNCTIONAL TEST	MODES IN WHICH SURVEILLANCE REQUIRED
1. OFFGAS VENT RADIATION MONITOR					
a. Noble Gas Activity Monitor	D	M	R(2)	Q(1)	*
b. Iodine Sampler	W(4)	N.A.	N.A.	N.A.	*
c. Particulate Sampler	W(4)	N.A.	N.A.	N.A.	*
d. Effluent System Flow Rate Monitor	D	N.A.	R	Q	*
e. Sampler Flow Rate Monitor	D	N.A.	R	Q	*
2. UNIT 1 VENT RADIATION MONITOR					
a. Noble Gas Activity Monitor	D	M	R(2)	Q(1)	*
b. Iodine Sampler	W(4)	N.A.	N.A.	N.A.	*
c. Particulate Sampler	W(4)	N.A.	N.A.	N.A.	*
d. Effluent System Flow Rate Monitor	D	N.A.	R	Q	*
e. Sampler Flow Rate Monitor	D	N.A.	R	Q	*

TABLE 4.3.7.10-1 (Continued)

RADIOACTIVE GASEOUS EFFLUENT MONITORING INSTRUMENTATION SURVEILLANCE REQUIREMENTS

INSTRUMENT	CHANNEL CHECK	SOURCE CHECK	CHANNEL CALIBRATION	CHANNEL FUNCTIONAL TEST	MODES IN WHICH SURVEILLANCE REQUIRED
3. UNIT 2 VENT RADIATION MONITOR					
a. Noble Gas Activity Monitor	D	M	R(2)	Q(1)	*
b. Iodine Sampler	W(4)	N.A.	N.A.	N.A.	*
c. Particulate Sampler	W(4)	N.A.	N.A.	N.A.	*
d. Effluent System Flow Rate Monitor	D	N.A.	R	Q	*
e. Sampler Flow Rate Monitor	D	N.A.	R	Q	*
4. TURBINE BUILDING/HEATER BAY VENT RADIATION MONITOR					
a. Noble Gas Activity Monitor	D	M	R(2)	Q(1)	*
b. Iodine Sampler	W(4)	N.A.	N.A.	N.A.	*
c. Particulate Sampler	W(4)	N.A.	N.A.	N.A.	*
d. Effluent System Flow Rate Monitor	D	N.A.	R	Q	*
e. Sampler Flow Rate Monitor	D	N.A.	R	Q	*

TABLE 4.3.7.10-1 (Continued)

RADIOACTIVE GASEOUS EFFLUENT MONITORING
INSTRUMENTATION SURVEILLANCE REQUIREMENTS

TABLE NOTATION

* At all times.

** During main condenser offgas treatment system operation.

(1) The CHANNEL FUNCTIONAL TEST shall also demonstrate that control room alarm annunciation occurs if any of the following conditions exists:

1. Instrument indicates measured levels above the alarm setpoint.

2. Instrument indicates a downscale failure.

3. Instrument controls not set in operate mode.

(2) The initial CHANNEL CALIBRATION shall be performed using one or more of the reference standards certified by the National Institute of Standards and Technology (NIST) or using standards that have been obtained from suppliers that participate in measurement assurance activities with NIST. These standards shall permit calibrating the system over its intended energy and measurement range. For subsequent CHANNEL CALIBRATION, sources that have been related to the initial calibration shall be used.

(3) NOT USED

(4) The iodine cartridges and particulate filters will be changed at least once per 7 days. Performance of this CHANNEL CHECK does not render the system inoperable, and the applicable ACTION statements need not be entered.

3/4.11 RADIOACTIVE EFFLUENTS

3/4.11.1 LIQUID EFFLUENTS

CONCENTRATION

CONTROLS

3.11.1.1 In accordance with Perry Nuclear Power Plant TS 5.5.4.b and c, the concentration of radioactive material released in liquid effluents to UNRESTRICTED AREAS (see Figure 3.2-1) shall be limited to the concentrations specified in 10CFR20, Appendix B, Table 2, Column 2, for radionuclides other than dissolved or entrained noble gases. For dissolved and entrained noble gases, the concentration shall be limited to 2×10^{-4} microcuries/ml total activity.

APPLICABILITY: At all times.

ACTION:

With the concentration of radioactive material released in liquid effluents to UNRESTRICTED AREAS exceeding the above limits, immediately restore the concentration to within the above limits.

SURVEILLANCE REQUIREMENTS

4.11.1.1.1 The radioactivity content of each batch of radioactive liquid waste shall be determined prior to release by sampling and analysis in accordance with Table 4.11.1.1.1-1. The results of pre-release analyses shall be used with the calculational methods in the ODCM to assure that the concentration at the point of release is maintained within the limits of Control 3.11.1.1.

4.11.1.1.2 Post-release analyses of samples composited from batch releases shall be performed in accordance with Table 4.11.1.1.1-1. The results of the radioactivity analysis shall be used in accordance with the methodology and parameters in the ODCM to assure that the concentrations at the point of release are maintained within the limits of Control 3.11.1.1.

4.11.1.1.3 Continuous releases of radioactive liquid effluents shall be sampled and analyzed in accordance with Table 4.11.1.1.1-1. The results of the radioactivity analyses shall be used in accordance with the methodology and parameters in the ODCM to assure that the concentrations at the point of release are maintained within the limits of Control 3.11.1.1.

TABLE 4.11.1.1.1-1
RADIOACTIVE LIQUID WASTE SAMPLING AND ANALYSIS PROGRAM

Liquid Release Type	Sampling Frequency	Minimum Analysis Frequency	Type of Activity Analysis	Lower Limit of Detection (LLD) (μCi/ml)[a]
A. Batch Waste Release Tanks[c]	P Each batch	P Each batch	Principal Gamma Emitters[d]	$5x10^{-7}$
			I-131	$1x10^{-6}$
	P One Batch/M	M	Dissolved and Entrained Gases (Gamma emitters)	$1x10^{-5}$
	P Each Batch	M Composite[b]	H-3	$1x10^{-5}$
			Gross Alpha	$1x10^{-7}$
	P Each Batch	Q Composite[b]	Sr-89, Sr-90	$5x10^{-8}$
			Fe-55	$1x10^{-6}$
B. Continuous Releases[e] RHR Heat Exchanger ESW Outlet or M35 Drains[g]	D Grab Sample[f,g]	W Composite[b,f,g]	Principal Gamma Emitters[d]	$5x10^{-7}$
			I-131	$1x10^{-6}$
	M[g] Grab Sample	M	Dissolved and Entrained Gases (Gamma emitters)	$1x10^{-5}$
	D Grab Sample[g]	M Composite[b,g]	H-3	$1x10^{-5}$
			Gross Alpha	$1x10^{-7}$
	D Grab Sample[g]	Q Composite[b,g] <R00449>	Sr-89, Sr-90	$5x10^{-8}$
			Fe-55	$1x10^{-6}$

TABLE 4.11.1.1.1-1 (Continued)

RADIOACTIVE LIQUID WASTE SAMPLING AND ANALYSIS PROGRAM

TABLE NOTATION

a. The LLD is the smallest concentration of radioactive material in a sample that will yield a net count (above system background) that will be detected with 95% probability with only 5% probability of falsely concluding that a blank observation represents a "real" signal.

It should be recognized that the LLD is defined as an "a priori" (before the fact) limit representing the capability of a measurement system and not as an "a posteriori" (after the fact) limit for a particular measurement.

For a particular measurement system (which may include radiochemical separation):

$$LLD = \frac{4.66 S_b}{(E)(V)\left(2.22 \times 10^6\right)(Y)\exp(-\lambda \Delta t)}$$

where

LLD is the "a priori" lower limit of detection as defined above (as μCi per unit mass or volume).

S_b is the standard deviation of the background counting rate or of the counting rate of a blank sample as appropriate (as counts per minute)

E is the counting efficiency (as counts per disintegration)

V is the sample size (in units of mass or volume)

2.22×10^6 is the number of disintegrations per minute per microcurie

Y is the fractional radiochemical yield (when applicable)

λ is the radioactive decay constant for the particular radionuclide (sec^{-1})

Δt is the elapsed time between sample collection (or end of the sample collection period) and time of counting (sec)

Typical values of E, V, Y and Δt should be used in the calculation.

TABLE 4.11.1.1.1-1 (Continued)

RADIOACTIVE LIQUID WASTE SAMPLING AND ANALYSIS PROGRAM

TABLE NOTATION (Continued)

b. A composite sample is one in which the quantity of liquid sampled is proportional to the quantity of liquid waste discharged and in which the method of sampling employed results in a specimen which is representative of the liquids released. A composite sample may also be obtained from liquid batches of similar origin that are not discharged as these liquid batches are expected to be representative of samples that could be discharged. Composite samples for batch liquids that were not released is performed to provide non-gamma emitting isotopic values to verify other batches are within limits prior to release when recent non-gamma emitting isotopic values for discharged liquids are not available.

c. A batch release is the discharge of liquid wastes of a discrete volume. Prior to sampling for analyses, each batch shall be isolated, and then thoroughly mixed to assure representative sampling.

d. The principal gamma emitters for which the LLD specification applies exclusively are the following radionuclides: Mn-54, Fe-59, Co-58, Co-60, Zn-65, Mo-99, Cs-134, Cs-137, and Ce-141. Ce-144 shall also be measured, but with an LLD of $5x10^{-6}$. This list does not mean that only these nuclides are to be detected and reported. Other peaks which are measurable and identifiable, together with the above nuclides, shall also be identified and reported in the Annual Radioactive Effluent Release Report pursuant to Control 6.9.1.7 in the format outlined in Regulatory Guide 1.21, Appendix B, Revision 1, June 1974.

e. A continuous release is the discharge of liquid wastes of a nondiscrete volume, e.g., from a volume of a system that has an input flow during the continuous release. Sampling/Analysis of RHR Heat Exchanger is only applicable when there is ESW flow thru the RHR Heat Exchanger.

f. Sampling and analysis is required of the RHR heat exchanger ESW outlet every 12 hours when the samples indicate levels greater than LLD.

g. Sampling is only required for M35 drains, when the M35 drains have been lined up to storm drains. If activity other than tritium or naturally occurring isotopes is detected in the M35 drains, then these drains shall be lined up to radwaste.

RADIOACTIVE EFFLUENTS

DOSE

CONTROLS

3.11.1.2 In accordance with Perry Nuclear Power Plant Unit 1 TS 5.5.4.d and e, the dose or dose commitment to a MEMBER OF THE PUBLIC from radioactive materials in liquid effluents released, from each reactor unit, to UNRESTRICTED AREAS (see Figure 3.2-1) shall be limited:

a. During the current quarter to less than or equal to 1.5 mrems to the whole body and to less than or equal to 5 mrems to any organ; and

b. During the current year to less than or equal to 3 mrems to the whole body and to less than or equal to 10 mrems to any organ.

APPLICABILITY: At all times.

ACTION:

a. With the calculated dose from the release of radioactive materials in liquid effluents exceeding any of the above limits, prepare and submit to the Commission within 30 days, pursuant to Control 6.9.2, a Special Report which identifies the cause(s) for exceeding the limit(s) and defines the corrective actions that have been taken to reduce the releases and the corrective actions to be taken to ensure that future releases will be in compliance with the above limits.

b. The provisions of Control 3.0.3 are not applicable.

SURVEILLANCE REQUIREMENTS

4.11.1.2 Dose Calculations. Cumulative dose contributions from liquid effluents for the current quarter and the current year shall be determined in accordance with the methodology and parameters of the ODCM at least once per 31 days.

RADIOACTIVE EFFLUENTS

LIQUID RADWASTE TREATMENT SYSTEM

CONTROLS

3.11.1.3 In accordance with Perry Nuclear Power Plant Unit 1 TS 5.5.4.f, the LIQUID RADWASTE TREATMENT SYSTEM shall be OPERABLE and appropriate portions of the system shall be used to reduce the release of radioactivity when the projected doses due to the liquid effluent from each reactor unit to UNRESTRICTED AREAS (see Figure 3.2-1) would exceed 0.06 mrem to the whole body or 0.2 mrem to any organ, in a 31-day period.

APPLICABILITY: At all times.

ACTION:

a. With radioactive liquid waste being discharged without treatment and in excess of the above limits, and any portion of the liquid radwaste treatment system not in operation, prepare and submit to the Commission, within 30 days pursuant to Control 6.9.2, a Special Report which includes the following information:

   1. Explanation of why liquid radwaste was being discharged without treatment, identification of any inoperable equipment or subsystems, and the reason for the inoperability, and

   2. Action(s) taken to restore the inoperable equipment to OPERABLE status, and

   3. Summary description of action(s) taken to prevent a recurrence.

b. The provisions of Control 3.0.3 are not applicable.

SURVEILLANCE REQUIREMENTS

4.11.1.3.1 Doses due to liquid releases from each reactor unit to UNRESTRICTED AREAS shall be projected at least once per 31 days, in accordance with methodology and parameters in the ODCM.

4.11.1.3.2 The installed LIQUID RADWASTE TREATMENT SYSTEM shall be demonstrated OPERABLE by meeting Controls 3.11.1.1 and 3.11.1.2.

RADIOACTIVE EFFLUENTS

3/4.11.2 GASEOUS EFFLUENTS

DOSE RATE

CONTROLS

3.11.2.1 In accordance with Perry Nuclear Power Plant Unit 1 TS 5.5.4.c and g, the dose rate due to radioactive materials released in gaseous effluents from the site to areas at and beyond the SITE BOUNDARY (see Figure 3.2-1) shall be limited to the following:

a. For noble gases: Less than or equal to 500 mrems/yr to the whole body and less than or equal to 3000 mrems/yr to the skin, and

b. For all iodine-131, iodine-133, tritium and all radionuclides in particulate form with half lives greater than 8 days: Less than or equal to 1500 mrems/yr to any organ.

APPLICABILITY: At all times.

ACTION:

With the dose rate(s) exceeding the above limits, immediately decrease the release rate(s) to within the above limit(s).

SURVEILLANCE REQUIREMENTS

4.11.2.1.1 The dose rate due to noble gases in gaseous effluents shall be determined to be within the above limits in accordance with the methodology and parameters of the ODCM.

4.11.2.1.2 The dose rate due to iodine-131, iodine-133, tritium and to radionuclides in particulate form with half lives greater than 8 days in gaseous effluents shall be determined to be within the above limits in accordance with the methodology and parameters of the ODCM by obtaining representative samples and performing analyses in accordance with the sampling and analysis program specified in Table 4.11.2.1.2-1.

TABLE 4.11.2.1.2-1
RADIOACTIVE GASEOUS WASTE SAMPLING AND ANALYSIS PROGRAM

GASEOUS RELEASE PATH	SAMPLING FREQUENCY	MINIMUM ANALYSIS FREQUENCY	TYPE OF ACTIVITY ANALYSIS	LOWER LIMIT OF DETECTION (LLD) [a] (μCi/mL)
A. Containment Vessel and Drywell Purge (M14) System, and Combustible Gas Control (M15) System	Each PURGE [b] and VENT Grab Sample	Each PURGE [b] and VENT	Principal Gamma Emitters [e]	$1x10^{-4}$
	M Grab Sample	M	H-3	$1x10^{-6}$
B. Offgas Vent, Unit 1 Vent, Unit 2 Vent, and Turbine Bldg/Heater Bay Vent	M [b] Grab Sample	M [b]	Principal Gamma Emitters [b,e]	$1x10^{-4}$
			H-3	$1x10^{-6}$
C. All Release Paths as listed in B above	Continuous [d]	W [c] Charcoal Sample	I-131	$1x10^{-12}$
			I-133	$1x10^{-10}$
	Continuous [d]	W [c] Particulate Sample	Principal Gamma Emitters [e]	$1x10^{-11}$
	Continuous [d]	M Composite Particulate Filter	Gross Alpha	$1x10^{-11}$
	Continuous [d]	Q Composite Particulate Filter	Sr-89, Sr-90	$1x10^{-11}$
	Continuous [d]	Noble Gas Monitor(f)	Noble Gases Gross Beta or Gamma	$1x10^{-6}$ (Xe-133 equivalent)

TABLE 4.11.2.1.2-1 (Continued)

RADIOACTIVE GASEOUS WASTE SAMPLING AND ANALYSIS PROGRAM

TABLE NOTATION

a. The LLD is the smallest concentration of radioactive material in a sample that will yield a net count (above system background) that will be detected with 95% probability with only 5% probability of falsely concluding that a blank observation represents a "real" signal.

It should be recognized that the LLD is defined as an "a priori" (before the fact) limit representing the capability of a measurement system and not as an "a posteriori" (after the fact) limit for a particular measurement.

For a particular measurement system (which may include radiochemical separation):

$$LLD = \frac{4.66\, S_b}{(E)(V)\left(2.22 \times 10^6\right)(Y)\exp\left(-\lambda\, \Delta t\right)}$$

where

LLD is the "a priori" lower limit of detection as defined above (as µCi per unit mass or volume).

S_b is the standard deviation of the background counting rate or of the counting rate of a blank sample as appropriate (as counts per minute)

E is the counting efficiency (as counts per disintegration)

V is the sample size (in units of mass or volume)

2.22×10^6 is the number of disintegrations per minute per microcurie

Y is the fractional radiochemical yield (when applicable)

λ is the radioactive decay constant for the particular radionuclide (sec^{-1})

Δt is the elapsed time between sample collection (or end of the sample collection period) and time of counting (sec)

Typical values of E, V, Y and Δt should be used in the calculation.

TABLE 4.11.2.1.2-1 (Continued)

RADIOACTIVE GASEOUS WASTE SAMPLING AND ANALYSIS PROGRAM

TABLE NOTATION (Continued)

b. Analyses shall also be performed following startup, shutdown, or a THERMAL POWER change exceeding 15 percent of the RATED THERMAL POWER within a one hour period. This requirement does not apply if (1) analysis shows that the DOSE EQUIVALENT I-131 concentration in the primary coolant has not increased more than a factor of 3; and (2) the noble gas monitor shows that effluent activity has not increased more than a factor of 3.

c. Samples shall be changed at least once per 7 days and analyses shall be completed within 48 hours after changing or after removal from sampler. Sampling and analyses shall also be performed at least daily (≥ 24 hours) for at least 7 days following each shutdown, startup or THERMAL POWER change exceeding 15 percent of RATED THERMAL POWER in one hour. When samples collected for 24 hours are analyzed, the corresponding LLD's may be increased by a factor of 10. This requirement does not apply if:

(1) Analysis shows that the DOSE EQUIVALENT I-131 concentration in the primary coolant has not increased more than a factor of 3; and

(2) The noble gas monitor shows that effluent activity has not increased more than a factor of 3. If the noble gas monitor is not operable, then a grab sample may be used to demonstrate that activity has not increased by a factor of 3.

d. The ratio of the sample flow rate to the sampled stream flow rate shall be known for the time period covered by each dose or dose rate calculation made in accordance with Control 3.11.2.1, 3.11.2.2 and 3.11.2.3.

e. The principal gamma emitters for which the LLD specification applies exclusively are the following radionuclides: Kr-87, Kr-88, Xe-133, Xe-133m, Xe-135, and Xe-138 for gaseous emissions and Mn-54, Fe-59, Co-58, Co-60, Zn-65, Mo-99, I-131, Cs-134, Cs-137, Ce-141 and Ce-144 for particulate emissions. This list does not mean that only these nuclides are to be detected and reported. Other peaks which are measurable and identifiable, together with the above nuclides, shall also be identified and reported in the Annual Radioactive Effluent Release Report pursuant to Control 6.9.1.7 in the format outlined in Regulatory Guide 1.21, Appendix B, Revision 1, June 1974.

f. Sampling and analysis of gaseous release points shall be performed initially whenever a high alarm setpoint is exceeded or whenever two or more of the alert setpoints are exceeded. If the high alarm setpoint or two or more of the alert setpoints continue to be exceeded, verify at least once per 4 hours via the radiation monitors that plant releases are below the Control 3.11.2.1 dose rate limits and sampling and analysis shall be performed at least once per 12 hours.

RADIOACTIVE EFFLUENTS

DOSE - NOBLE GASES

CONTROLS

3.11.2.2 In accordance with Perry Nuclear Power Plant Unit 1 TS 5.5.4.e and h, the air dose due to noble gases released in gaseous effluents, from each reactor unit, from the site to areas at and beyond the SITE BOUNDARY (see Figure 3.2-1) shall be limited to the following:

a. During the current quarter: Less than or equal to 5 mrads for gamma radiation and less than or equal to 10 mrads for beta radiation; and

b. During the current year: Less than or equal to 10 mrads for gamma radiation and less than or equal to 20 mrads for beta radiation.

APPLICABILITY: At all times.

ACTION:

a. With the calculated air dose from the radioactive noble gases in gaseous effluents exceeding any of the above limits, prepare and submit to the Commission within 30 days, pursuant to Control 6.9.2, a Special Report which identifies the cause(s) for exceeding the limit(s) and defines the corrective actions to be taken to ensure that future releases will be in compliance with Control 3.11.2.2.

b. The provisions of Control 3.0.3 are not applicable.

SURVEILLANCE REQUIREMENTS

4.11.2.2 Dose Calculations. Cumulative dose contributions for noble gases for the current quarter and current year shall be determined in accordance with the methodology and parameters in the ODCM at least once per 31 days.

RADIOACTIVE EFFLUENTS

DOSE - IODINE-131, IODINE-133, TRITIUM AND RADIONUCLIDES IN PARTICULATE FORM

CONTROLS

3.11.2.3 In accordance with Perry Nuclear Power Plant Unit 1 TS 5.5.4.e and i, the dose to a MEMBER OF THE PUBLIC from iodine-131, iodine-133, tritium and radionuclides in particulate form with half-lives greater than 8 days in gaseous effluents released, from each reactor unit, from the site to areas at and beyond the SITE BOUNDARY (see Figure 3.2-1) shall be limited to the following:

a. During the current quarter: Less than or equal to 7.5 mrem to any organ; and

b. During the current year: Less than or equal to 15 mrem to any organ.

APPLICABILITY: At all times.

ACTION:

a. With the calculated dose from the release of iodine-131, iodine-133, tritium and radionuclides in particulate form, with half-lives greater than 8 days, in gaseous effluents exceeding any of the above limits, prepare and submit to the Commission within 30 days, pursuant to Control 6.9.2, a Special Report which identifies the cause(s) for exceeding the limit and defines the corrective actions that have been taken to reduce releases and the proposed corrective actions to be taken to ensure that future releases will be in compliance with Control 3.11.2.3.

b. The provisions of Control 3.0.3 are not applicable.

SURVEILLANCE REQUIREMENTS

4.11.2.3 Dose Calculations. Cumulative dose contributions from iodine-131, iodine-133, tritium and radionuclides in particulate form with half-lives greater than 8 days for the current quarter and current year shall be determined in accordance with the methodology and parameters in the ODCM at least once per 31 days.

RADIOACTIVE EFFLUENTS

GASEOUS RADWASTE (OFF-GAS) TREATMENT

CONTROLS

3.11.2.4 The GASEOUS RADWASTE TREATMENT (OFFGAS) SYSTEM shall be in operation*. <L02211> The Charcoal bypass mode shall not be used unless the off-gas post-treatment radiation monitor is OPERABLE.

APPLICABILITY: Whenever the main condenser air ejector evacuation system is in operation.

ACTION:

a. With gaseous radwaste from the main condenser air ejector system being discharged without treatment for more than 7 consecutive days, prepare and submit to the Commission within 30 days, pursuant to Control 6.9.2, a Special Report which includes the following information:

   1. Explanation of why gaseous radwaste was being discharged without treatment, identification of the inoperable equipment or subsystems which resulted in gaseous radwaste being discharged without treatment, and the reason for inoperability.

   2. Action(s) taken to restore the inoperable equipment to OPERABLE status, and

   3. Summary description of action(s) taken to prevent a recurrence.

b. The provisions of Control 3.0.3 are not applicable.

SURVEILLANCE REQUIREMENTS

4.11.2.4 The readings of relevant instrumentation shall be checked at least once per 12 hours when the main condenser air ejector is in use to ensure that the gaseous radwaste treatment system is functioning.

* - Flow directed through the adsorber beds. <L02211>

RADIOACTIVE EFFLUENTS

VENTILATION EXHAUST TREATMENT SYSTEMS

CONTROLS

3.11.2.5 The VENTILATION EXHAUST TREATMENT SYSTEMS shall be OPERABLE and appropriate portions of the system shall be used to reduce releases of radioactivity when the projected dose due to gaseous effluent releases from each reactor unit to areas at and beyond the SITE BOUNDARY (see Figure 3.2-1) in a 31 day period would exceed 0.3 mrem to any organ of a MEMBER OF THE PUBLIC.

APPLICABILITY: At all times.

ACTION:

a. With radioactive gaseous waste being discharged without treatment and in excess of the above limits, prepare and submit to the Commission within 30 days, pursuant to Control 6.9.2, a Special Report which includes the following information:

   1. Explanation of why gaseous radwaste was being discharged without treatment, identification of any inoperable equipment or subsystems which resulted in gaseous radwaste being discharged without treatment, and the reason for the inoperability,

   2. Action(s) taken to restore the inoperable equipment to OPERABLE status, and

   3. Summary description of action(s) taken to prevent a recurrence.

b. The provisions of Control 3.0.3 are not applicable.

SURVEILLANCE REQUIREMENTS

4.11.2.5.1 Doses due to gaseous releases from each reactor unit to areas at and beyond the SITE BOUNDARY shall be projected at least once per 31 days in accordance with the methodology and parameters in the ODCM.

4.11.2.5.2 The installed VENTILATION EXHAUST TREATMENT SYSTEMS shall be demonstrated OPERABLE by meeting Controls 3.11.2.1 and 3.11.2.3.

RADIOACTIVE EFFLUENTS

3/4.11.4 TOTAL DOSE

CONTROLS

3.11.4 In accordance with Perry Nuclear Power Plant Unit 1 TS 5.5.4.j, the current year dose or dose commitment to any MEMBER of THE PUBLIC, due to releases of radioactivity and radiation, from uranium fuel cycle sources shall be limited to less than or equal to 25 mrems to the whole body or any organ, except the thyroid, which shall be limited to less than or equal to 75 mrems.

APPLICABILITY: At all times.

ACTION:

a. With the calculated doses from the release of radioactive materials in liquid or gaseous effluents exceeding twice the limits of Control 3.11.1.2a., 3.11.1.2b., 3.11.2.2a., 3.11.2.2b., 3.11.2.3a, or 3.11.2.3b., calculations shall be made including direct radiation contributions from the reactor units and from outside storage tanks to determine whether the above limits of Control 3.11.4 have been exceeded.

   1. If such is the case, prepare and submit to the Commission within 30 days, pursuant to Control 6.9.2, a Special Report that defines the corrective action to be taken to reduce subsequent releases to prevent recurrence of exceeding the above limits and includes the schedule for achieving conformance with the above limits.

   2. This Special Report, as defined in 10CFR20.405c, shall include an analysis that estimates the radiation exposure (dose) to a MEMBER OF THE PUBLIC from uranium fuel cycle sources, including all effluent pathways and direct radiation, for the current year that includes the release(s) covered by this report. It shall also describe levels of radiation and concentrations of radioactive material involved, and the cause of the exposure levels or concentrations.

   3. If the estimated dose(s) exceeds the above limits, and if the release condition resulting in violation of 40CFR190 has not already been corrected, the Special Report shall include a request for a variance in accordance with the provisions of 40CFR190. Submittal of the report is considered a timely request, and a variance is granted until staff action on the request is complete.

b. The provisions of Control 3.0.3 are not applicable.

SURVEILLANCE REQUIREMENTS

4.11.4.1 Cumulative dose contributions from liquid and gaseous effluents shall be determined in accordance with Controls 4.11.1.2, 4.11.2.2, and 4.11.2.3, and in accordance with the methodology and parameters in the ODCM.

4.11.4.2 If the cumulative dose contributions exceed the limits defined in 3.11.4, ACTION a, cumulative dose contributions from direct radiation from unit operation including outside storage tanks shall be determined in accordance with the methodology and parameters in the ODCM.

3/4.12 RADIOLOGICAL ENVIRONMENTAL MONITORING

3/4.12.1 MONITORING PROGRAM

CONTROLS

3.12.1 The radiological environmental monitoring program shall be conducted as specified in Table 3.12.1-1.

APPLICABILITY: At all times.

ACTION:

a. With the radiological environmental monitoring program not being conducted as specified in Table 3.12.1-1, prepare and submit to the Commission, in the Annual Environmental and Effluent Release Report per Control 6.9.1.6, a description of the reasons for not conducting the program as required and the plans for preventing a recurrence.

b. With the level of radioactivity as the result of plant effluents in an environmental sampling medium at a specified location exceeding the reporting levels of Table 3.12.1-2 when averaged over the current quarter, prepare and submit to the Commission within 30 days pursuant to Control 6.9.2 a Special Report that identifies the cause(s) for exceeding the limit(s) and defines the corrective actions to be taken to reduce radioactive effluents so that the potential annual dose to a MEMBER OF THE PUBLIC is less than the current year limits of Control 3.11.1.2, 3.11.2.2 and 3.11.2.3. When more than one of the radionuclides in Table 3.12.1-2 are detected in the sampling medium, this report shall be submitted if:

$$\frac{\text{concentration}(1)}{\text{reporting level}(1)} + \frac{\text{concentration}(2)}{\text{reporting level}(2)} + \cdots \geq 1.0$$

When radionuclides other than those in Table 3.12.1-2 are detected and are the result of plant effluents, this report shall be submitted if the potential annual dose* to a MEMBER OF THE PUBLIC is equal to or greater than the current year limits of Control 3.11.1.2, 3.11.2.2 and 3.11.2.3. This report is not required if the measured level of radioactivity was not the result of plant effluents; however, in such an event, the condition shall be reported and described in the annual Radiological Environmental Operating Report required by Control 6.9.1.6.

*The methodology and parameters used to estimate the potential annual dose to a MEMBER OF THE PUBLIC shall be indicated in this report.

RADIOLOGICAL ENVIRONMENTAL MONITORING

CONTROLS

c. With milk or broad leaf vegetation samples unavailable from one or more of the sample locations required by Table 3.12.1-1, identify specific locations for obtaining replacement samples and add them within 30 days to the Radiological Environmental Monitoring Program given in the ODCM. The specific locations from which samples were unavailable may then be deleted from the monitoring program. Pursuant to Control 6.9.1.7, submit in the next Annual Radiological Effluent Release Report documentation for a change in the ODCM including a revised figure(s) and table for the ODCM reflecting the new location(s) with supporting information identifying the cause of the unavailability of samples and justifying the selection of the new location(s) for obtaining samples.

d. The provisions of Control 3.0.3 are not applicable.

SURVEILLANCE REQUIREMENTS

4.12.1 The radiological environmental monitoring samples shall be collected pursuant to Table 3.12.1-1 from the specific locations given in the table and figures in the ODCM and shall be analyzed pursuant to the requirements of Table 3.12.1-1 and the detection capabilities required by Table 4.12.1-1.

TABLE 3.12.1-1

RADIOLOGICAL ENVIRONMENTAL MONITORING PROGRAM*

Exposure Pathway and/or Sample	Number of Samples and Sample Locations (1)	Sampling and Collection Frequency	Type and Frequency of Analysis
1. Direction Radiation(2)	Twenty-eight routine monitoring stations either with two or more dosimeters or with one instrument for measuring and recording dose rate continuously, placed as follows: An inner ring of stations, one in each meteorological sector, other than those sectors entirely over water (N, NNE, NNW, NW, W, WNW), in the general area of the SITE BOUNDARY; An outer ring of stations, one in each meteorological sector, other than those sectors entirely over water (N, NE, NNE, NNW, NW, W, WNW), in the 6- to 8-km range from the site; and The balance of the stations to be placed in special interest areas such as population centers, nearby residences, schools, and in one or two areas to serve as control stations.	Quarterly.	Gamma dose quarterly.

TABLE 3.12.1-1 (Continued)

RADIOLOGICAL ENVIRONMENTAL MONITORING PROGRAM

Exposure Pathway and/or Sample	Number of Samples and Sample Locations (1)	Sampling and Collection Frequency	Type and Frequency of Analysis
2. Airborne			
Radioiodine and Particulate	Samples from five locations: Three samples from close to the three SITE BOUNDARY locations, in different sectors, of the highest calculated annual average ground-level D/Q. One sample from the vicinity of a community having the highest calculated annual average ground-level D/Q; and One sample from a control location, as for example 15 to 30 km distant and in the least prevalent wind direction.	Continuous sampler operation with sample collection weekly, or more frequently if required by dust loading.	Radioiodine Canister: I-131 analysis weekly. Particulate Sampler: Gross beta radioactivity analysis following filter change; (3) and gamma isotopic analysis(4) of composite (by location) quarterly.
3. Waterborne			
a. Surface	Two samples	Composite sample over a 1-month period.(5)	Gamma isotopic analysis(4) monthly. Composite for tritium analysis quarterly.

TABLE 3.12.1-1 (Continued)

RADIOLOGICAL ENVIRONMENTAL MONITORING PROGRAM

Exposure Pathway and/or Sample	Number of Samples and Sample Locations (1)	Sampling and Collection Frequency	Type and Frequency of Analysis
3. Waterborne (Continued)			
b. Drinking	One sample of each of one to three of the nearest water supplies that could be affected by its discharge. One sample from a control location.	Composite sample over 2-week period[5] when I-131 analysis is performed; monthly composite otherwise.	I-131 analysis on each composite when the dose calculated from the consumption of the water is greater than 1 mrem per year.[6] Composite for gross beta and gamma isotopic analyses[4] monthly. Composite for tritium analysis quarterly.
c. Sediment from shoreline	One sample from area with existing or potential recreational value.	Semi-annually.	Gamma isotopic analysis[4] semi-annually.
4. Ingestion			
a. Milk	Samples from milking animals in three locations within 5km distance having the highest dose potential. If there are none, then one sample from milking animals in each of between 5 to 8 km distant where doses are three areas calculated to be greater than 1 mrem per yr.[6] One sample from milking animals at a control location 15 to 30 km distant and in the least prevalent wind direction.	Semi-monthly when animals are on pasture; monthly at other times.	Gamma isotopic analysis[4] and I-131 analysis semi-monthly, when animals are on pasture; monthly at other times.

TABLE 3.12.1-1 (Continued)

RADIOLOGICAL ENVIRONMENTAL MONITORING PROGRAM

Exposure Pathway and/or Sample	Number of Samples and Sample Locations (1)	Sampling and Collection Frequency	Type and Frequency of Analysis
4. Ingestion (Continued)			
b. Fish and Invertebrates	One sample of one commercially and/or recreationally-important species in vicinity of plant discharge area.	One sample in season.	Gamma isotopic analysis[4] on edible portions.
	One sample of same species in areas not influenced by plant discharge.		
c. Food Products	Sample of three different kinds of broad leaf vegetation grown nearest each of two different offsite locations of highest predicted annual average ground level D/Q if milk sampling is not performed.	Monthly during growing season.	Gamma isotopic analysis[4] and I-131 analysis.
	One sample of each of the similar broad leaf vegetation grown 15 to 30 km distant in the least prevalent wind direction if milk sampling is not performed.	Monthly during growing season.	Gamma isotopic analysis[4] and I-131 analysis.

TABLE 3.12.1-1 (Continued)

RADIOLOGICAL ENVIRONMENTAL MONITORING PROGRAM

TABLE NOTATIONS

* Sample locations are given on the figure and the table in the ODCM.

(1) Specific parameters of distance and direction sector from the centerline of one reactor, and additional description where pertinent, shall be provided for each and every sample location in Table 3.12-1 in a table and figure(s) in the ODCM. Refer to NUREG-0133, "Preparation of Radiological Effluent Technical Specifications for Nuclear Power Plants," October 1978, and to Radiological Assessment Branch Technical Position, Revision 1, November 1979. Deviations are permitted from the required sampling schedule if specimens are unobtainable due to circumstances such as hazardous conditions, seasonal unavailability, and malfunction of automatic sampling equipment. If specimen's are unobtainable due to sampling equipment malfunction, effort shall be made to complete corrective action prior to the end of the next sampling period. All deviations from the sampling schedule shall be documented in the annual Radiological Environmental Operating Report pursuant to Control 6.9.1.6. It is recognized that, at times, it may not be possible or practicable to continue to obtain samples of the media of choice at the most desired location or time. In these instances suitable specific alternative media and locations may be chosen for the particular pathway in question and appropriate substitutions made with 30 days in the Radiological Environmental Monitoring Program given in the ODCM. Pursuant to Control 6.9.1.7, submit in the next annual Radioactive Effluent Release Report documentation for a change in the ODCM, including a revised figure(s) and table for the ODCM reflecting the new location(s) with supporting information identifying the cause of the unavailability of samples for that pathway and justifying the selection of the new location(s) for obtaining samples.

(2) One or more instruments, such as a pressurized ion chamber, for measuring and recording dose rate continuously may be used in place of, or in addition to, integrating dosimeters. For the purposes of this table, a thermoluminescent dosimeter (TLD) is considered to be one phosphor; two or more phosphors in a packet are considered as two or more dosimeters. Film badges shall not be used as dosimeters for measuring direct radiation. (The frequency of analysis or readout for TLD systems will depend upon the characteristics of the specific system used and should be selected to obtain optimum dose information with minimal fading.)

(3) Airborne particulate sample filters shall be analyzed for gross beta radioactivity 24 hours or more after sampling to allow for radon and thoron daughter decay. If gross beta activity in air particulate samples is greater than 10 times the yearly mean of control samples, gamma isotopic analysis shall be performed on the individual samples.

TABLE 3.12.1-1 (Continued)

TABLE NOTATIONS (Continued

(4) Gamma isotopic analysis means the identification and quantification of gamma-emitting radionuclides that may be attributable to the effluents from the facility.

(5) A composite sample is one in which the quantity (aliquot) of liquid sampled is proportional to the quantity of flowing liquid and in which the method of sampling employed results in a specimen that is representative of the liquid flow. In this program composite sample aliquots shall be collected at time intervals that are very short (e.g., hourly) relative to the compositing period (e.g., monthly) in order to assure obtaining a representative sample.

(6) The dose shall be calculated for the maximum organ and age group, using the methodology and parameters in the ODCM.

TABLE 3.12.1-2

REPORTING LEVELS FOR RADIOACTIVITY CONCENTRATIONS IN ENVIRONMENTAL SAMPLES

Reporting Levels

Analysis	Water (pCi/L)	Airborne Particulate or Gases (pCi/m^3)	Fish (pCi/Kg, wet)	Milk (pCi/L)	Food Products (pCi/kg, wet)
H-3	2×10^4 [a]	NA	NA	NA	NA
Mn-54	1×10^3	NA	3×10^4	NA	NA
Fe-59	4×10^2	NA	1×10^4	NA	NA
Co-58	1×10^3	NA	3×10^4	NA	NA
Co-60	3×10^2	NA	1×10^4	NA	NA
Zn-65	3×10^2	NA	2×10^4	NA	NA
Zr-Nb-95	4×10^2	NA	NA	NA	NA
I-131	2	0.9	NA	3	1×10^2
Cs-134	30	10	1×10^3	60	1×10^3
Cs-137	50	20	2×10^3	70	2×10^3
Ba-La-140	2×10^2	NA	NA	3×10^2	NA

[a] For drinking water samples. This is a 40CFR141 value.

TABLE 4.12.1-1

(a),(b),(c)

MAXIMUM VALUES FOR THE LOWER LIMITS OF DETECTION (LLD) IN ENVIRONMENTAL SAMPLES

Analysis	Water (pCi/l)	Airborne Particulate or Gases (pCi/m^3)	Fish (pCi/Kg, wet)	Milk (pCi/l)	Broad Leaf Vegetation (pCi/kg,wet)	Sediment (pCi/kg,wet)
Gross beta	4	1×10^{-2}	NA	NA	NA	NA
H-3	2000*	NA	NA	NA	NA	NA
Mn-54	15	NA	130	NA	NA	NA
Fe-59	30	NA	260	NA	NA	NA
Co-58,60	15	NA	130	NA	NA	NA
Zn-65	30	NA	260	NA	NA	NA
Zr-95	30	NA	NA	NA	NA	NA
Nb-95	15	NA	NA	NA	NA	NA
I-131	1**	7×10^{-2}	NA	1	60	NA
Cs-134	15	5×10^{-2}	130	15	60	150
Cs-137	18	6×10^{-2}	150	18	80	180
Ba-140	60	NA	NA	60	NA	NA
La-140	15	NA	NA	15	NA	NA

*If no drinking water pathway exists, a value of 3000 pCi/l may be used.
**If no drinking water pathway exists, a value of 15 pCi/l may be used.

TABLE 4.12.1-1 (Continued)

MAXIMUM VALUES FOR THE LOWER LIMITS OF DETECTION (LLD)

TABLE NOTATION

[a]Acceptable detection capabilities for thermoluminescent dosimeters used for environmental measurements are given in Regulatory Guide 4.13.

[b]Table 4.12-1 indicates acceptable detection capabilities for radioactive materials in environmental samples. These detection capabilities are tabulated in terms of the lower limits of detection (LLDs). The LLD is defined, for purposes of this guide, as the smallest concentration of radioactive material in a sample that will yield a net count (above system background) that will be detected with 95% probability with only 5% probability of falsely concluding that a blank observation represents a "real" signal.

For a particular measurement system (which may include radiochemical separation):

$$LLD = \frac{4.66\, S_b}{(E)\,(V)\left(2.22 \times 10^6\right)(Y)\exp\left(-\lambda\, \Delta t\right)}$$

where

LLD is the "a priori" lower limit of detection as defined above (as µCi per unit mass or volume).

S_b is the standard deviation of the background counting rate or of the counting rate of a blank sample as appropriate (as counts per minute)

E is the counting efficiency (as counts per disintegration)

V is the sample size (in units of mass or volume)

$2.22\ 10^6$ is the number of disintegrations per minute per microcurie

Y is the fractional radiochemical yield (when applicable)

λ is the radioactive decay constant for the particular radionuclide (sec^{-1})

Δt is the elapsed time between sample collection (or end of the sample collection period) and time of counting (sec)

Typical values of E, V, Y and Δt should be used in the calculation.

TABLE 4.12.1-1 (Continued)

MAXIMUM VALUES FOR THE LOWER LIMITS OF DETECTION (LLD)

TABLE NOTATION (continued)

It should be recognized that the LLD is defined as an "a priori" (before the fact) limit representing the capability of a measurement system and not as an "a posteriori" (after the fact) limit for a particular measurement.

Occasionally background fluctuations, unavoidable small sample size, the presence of interfering nuclides, or other uncontrollable circumstances may render these LLDs unachievable. In such cases, the contributing factors should be identified and described in the annual Radiological Environmental Operating Report pursuant to Control 6.9.1.6.

The value of S_b used in the calculation of the LLD for a particular measurement system should be based on the actual observed variance of the background counting rate or of the counting rate of the blank samples (as appropriate) rather than on an unverified theoretically predicated variance.

[c]This list does not mean that only these nuclides are to be considered. Other peaks that are identifiable, together with those of the above nuclides, shall also be analyzed and reported in the Annual Radiological Environmental Operating Report pursuant to Control 6.9.16.

RADIOLOGICAL ENVIRONMENTAL MONITORING

3/4.12.2 LAND USE CENSUS

CONTROLS

3.12.2 A land use census shall be conducted and shall identify within a distance of 8 km (5 miles) the location in each of the 16 meteorological sectors of the nearest milk animal, the nearest residence and the nearest garden* of greater than 50 m^2 (500 ft^2) producing broad leaf vegetation.

APPLICABILITY: At all times.

ACTION:

a. With a land use census identifying a location(s) which yields a calculated dose or dose commitment greater than the values currently being calculated in Control 4.11.2.3, identify the new location(s)* in the next Annual Radioactive Effluent Release Report, pursuant to Control 6.9.1.7.

b. With a land use census identifying a location(s) which yields a calculated dose or dose commitment (via the same exposure pathway) 20 percent greater than at a location from which milk and/or broad leaf vegetation samples are currently being obtained in accordance with Control 3.12.1, add the new location(s) to the radiological environmental monitoring program within 30 days. If no milk and/or broad leaf vegetation samples are identified in the new sector with the highest D/Q value, then the next sector with the highest D/Q value will be considered and so on until a sampling location can be established. The sampling location(s), excluding the control station location, having the lowest calculated dose or dose commitment(s), via the same exposure pathway may be deleted from this monitoring program after October 31 of the year in which this land use census was conducted.* Identify the new location(s) in the next annual Radioactive Effluent Release Report and also include in the report a revised figure(s) and table(s) for the ODCM reflecting the new location(s).

c. The provisions of Control 3.0.3 are not applicable.

SURVEILLANCE REQUIREMENTS

4.12.2 The land use census shall be conducted during the growing season at least once per 12 months using that information that will provide the best results, such as by a door-to-door survey, aerial survey, or by consulting local agriculture authorities. The results of the land use census shall be included in the annual Radiological Environmental Operating Report pursuant to Control 6.9.1.6.

*Broad leaf vegetation sampling of at least three different kinds of vegetation may be performed at the site boundary in each of two different direction sectors with the highest predicted D/Qs in lieu of the garden census. Controls for broad leaf vegetation sampling in Table 3.12.1-1 shall be followed, including analysis of control samples.

RADIOLOGICAL ENVIRONMENTAL MONITORING

3/4.12.3 INTERLABORATORY COMPARISON PROGRAM

CONTROLS

3.12.3 Analyses shall be performed on radioactive materials that correspond to samples required by Table 3.12.1-1. These materials are supplied as part of an Inter-laboratory Comparison Program.

APPLICABILITY: At all times.

ACTION:

a. With analyses not being performed as required above, report the corrective actions taken to prevent a recurrence to the Commission in the Annual Environmental and Effluent Release Report pursuant to Control 6.9.1.6.

b. The provisions of Control 3.0.3 are not applicable.

SURVEILLANCE REQUIREMENTS

4.12.3 A summary of the results obtained as part of the above required Inter-Laboratory Comparison Program shall be included in the annual Radiological Environmental Operating Report pursuant to Control 6.9.1.6.

BASES FOR

SECTIONS 3.0 AND 4.0

CONTROLS

AND

SURVEILLANCE REQUIREMENTS

NOTE

The BASES contained in succeeding pages summarize the reasons for the Controls in Section 3.0 and 4.0, but are not part of these Controls.

3/4 CONTROLS AND SURVEILLANCE REQUIREMENTS

3/4.0 APPLICABILITY

BASES

Controls 3.0.1 through 3.0.5 establish the general requirements applicable to Appendix C Controls and apply at all times, unless otherwise stated.

Control 3.0.1 establishes the Applicability statement within each individual control as the requirement for when the Control is required to be met (i.e., when the unit is in the MODES or other specified conditions of the Applicability statement of each Control).

Control 3.0.2 establishes that upon discovery of a failure to meet a Control, the associated ACTIONS shall be met. The Completion Time of each ACTION condition is applicable from the point in time that an ACTIONS condition is entered. The ACTIONS establish those remedial measures that must be taken within specified times when the requirements of a Control are not met. This Control establishes that:

a. Completion of the ACTIONS within the specified times constitutes compliance with a Control; and

b. Completion of the ACTIONS is not required when a Control is met within the specified time, unless otherwise specified.

There are two basic types of ACTION requirements. The first type of ACTIONS specifies a time limit in which the Control must be met. This time limit is the time to restore an inoperable system or component to OPERABLE status or to restore variables to within specified limits. If this type of ACTION is not completed within the specified completion time, a shutdown may be required to place the unit in a MODE or condition in which the Control is not applicable. (Whether stated as an ACTION or not, correction of the entered condition is an action that may always be considered upon entering ACTIONS.) The second type of ACTION specifies the remedial measures that permit continued operation of the unit that is not further restricted by the completion time. In this case, compliance with the ACTIONS provides an acceptable level of safety for continued operation.

Completing the ACTIONS is not required when a Control is met or is no longer applicable, unless otherwise stated in the individual Control.

The nature of some ACTIONS of some conditions necessitates that, once the condition is entered, the ACTIONS must be completed even though the associated condition no longer exists. The individual Control's ACTIONS specify where this is the case.

3/4.0 APPLICABILITY

BASES (Continued)

The completion times of the ACTIONS are also applicable when a system or component is removed from service intentionally. The reasons for intentionally relying on the ACTIONS include, but are not limited to, performance of Surveillances, preventive maintenance, corrective maintenance, or investigation of operational problems. Entering ACTIONS for these reasons must be done in a manner that does not compromise safety. Intentional entry into ACTIONS should not be made for operational convenience. Alternatives that would not result in redundant equipment being inoperable should be used instead. Doing so limits the time both subsystems/divisions of a safety function are inoperable and limits the time other conditions exist which result in Control 3.0.3 being entered. Individual Controls may specify a time limit for performing an SR when equipment is removed from service or bypassed for testing. In this case, the completion times of ACTIONS are applicable when this time limit expires, if the equipment remains removed from service or bypassed.

When a change in MODE or other specified condition is required to comply with an ACTION, the unit may enter a MODE or other specified condition in which another Control becomes applicable. In this case, the completion times of the associated ACTIONS would apply from the point in time that the new Control becomes applicable and the ACTIONS condition(s) are entered.

Control 3.0.3 establishes the actions that must be implemented when a Control is not met and:

a. An associated ACTION and completion time is not met and no other condition applies; or

b. The condition of the unit is not specifically addressed by the associated ACTIONS. This means that no combination of conditions stated in the ACTIONS can be made that exactly corresponds to the actual condition of the unit. Sometimes, possible combinations of conditions are such that entering Control 3.0.3 is warranted; in such cases, the ACTIONS specifically state a condition corresponding to such combinations and also that Control 3.0.3 be entered immediately.

This Control delineates the time limits for placing the unit in a safe MODE or other specified condition when operation cannot be maintained within the limits for safe operation as defined by the Control and its ACTIONS. It is not intended to be used as an operational convenience that permits routine voluntary removal of redundant systems or components from service in lieu of other alternatives that would not result in redundant systems or components being inoperable.

3/4.0 APPLICABILITY

BASES (Continued)

Upon entering Control 3.0.3, 1 hour is allowed to prepare for an orderly shutdown before initiating a change in unit operation. This includes time to permit the operator to coordinate the reduction in electrical generation with the load dispatcher to ensure the stability and availability of the electrical grid. The time limits specified to reach lower MODES of operation permit the shutdown to proceed in a controlled and orderly manner that is well within the specified maximum cooldown rate and within the capabilities of the unit, assuming that only the minimum required equipment is OPERABLE. This reduces thermal stresses on components of the Reactor Coolant System and the potential for a plant upset that could challenge safety systems under conditions to which this Control applies.

A unit shutdown required in accordance with Control 3.0.3 may be terminated and Control 3.0.3 exited if any of the following occurs:

a. The Control is met.

b. A condition exists for which the ACTIONS have now been performed.

c. ACTIONS exist that do not have expired completion times. These completion times are applicable from the point in time that the condition is initially entered and not from the time Control 3.0.3 is exited.

The time limits of Control 3.0.3 allow 37 hours for the unit to be in MODE 4 when a shutdown is required during MODE 1 operation. If the unit is in a lower MODE of operation when a shutdown is required, the time limit for reaching the next lower MODE applies. If a lower MODE of operation is reached in less time than allowed, however, the total allowable time to reach MODE 4, or other applicable MODE, is not reduced. For example, if MODE 2 is reached in 2 hours, then the time allowed for reaching MODE 3 is the next 11 hours, because the total time for reaching MODE 3 is not reduced from the allowable limit of 13 hours. Therefore, if remedial measures are completed that would permit a return to MODE 1, a penalty is not incurred by having to reach a lower MODE of operation in less than the total time allowed.

In MODES 1, 2, and 3, Control 3.0.3 provides actions for conditions not covered in other Controls. The requirements of Control 3.0.3 do not apply in MODES 4 and 5 because the unit is already in the most restrictive condition required by Control 3.0.3. The requirements of Control 3.0.3 do not apply in other specified conditions of the Applicability (unless in MODE 1, 2, or 3) because the ACTIONS of individual Controls sufficiently define the remedial measures to be taken.

Exceptions to Control 3.0.3 are provided in instances where requiring a unit shutdown, in accordance with Control 3.0.3, would not provide appropriate remedial measures for the associated condition of the unit. These exceptions are addressed in the individual Controls.

3/4.0 APPLICABILITY

BASES (Continued)

Control 3.0.4 establishes limitations on changes in MODES or other specified conditions in the Applicability when a Control is not met. It precludes placing the Unit in a MODE or other specified condition stated in that Applicability (e.g., Applicability desired to be entered) when the following exist:

a. Unit conditions are such that the requirements of the Control would not be met in the Applicability desired to be entered; and

b. Continued noncompliance with the Control requirements, if the Applicability were entered, would result in the unit being required to exit the Applicability desired to be entered to comply with the ACTIONS.

Compliance with ACTION requirements that permit continued operation of the facility for an unlimited period of time in a MODE or other specified condition provides an acceptable level of safety for continued operation. This is without regard to the status of the plant before or after the MODE change. Therefore, in such cases, entry into a MODE or other specified condition in the Applicability may be made in accordance with the provisions of the ACTION requirements. The provisions of this control should not be interpreted as endorsing the failure to exercise the good practice of restoring systems or components to OPERABLE status before Unit startup.

The provisions of Control 3.0.4 shall not prevent changes in MODES or other specified conditions in the Applicability that are required to comply with ACTIONS. In addition, the provisions of Control 3.0.4 shall not prevent changes in MODES or other specified conditions in the Applicability that result from any unit shutdown.

Exceptions to Control 3.0.4 are stated in the individual Controls. Exceptions may apply to all the ACTIONS or to a specific ACTION of a Control.

Surveillances do not have to be performed on the associated inoperable equipment (or on variables outside the specified limits), as permitted by SR 3.0.1. Therefore, changing MODES or other specified conditions while in an ACTIONS condition, either compliance with Control 3.0.4, or where an exception to Control 3.0.4 is stated, is not a violation of SR 4.0.1 or SR 4.0.4 for those Surveillances that do not have to be performed due to the associated inoperable equipment. However, SRs must be met to ensure OPERABILITY prior to declaring the associated equipment OPERABLE (or variable within limits) and restoring compliance with the affected Control.

Control 3.0.4 is only applicable when entering MODE 3 from MODE 4, MODE 2 from MODE 3 or 4, or MODE 1 from MODE 2. Furthermore, Control 3.0.4 is applicable when entering any other specified condition in the Applicability only while operating in MODE 1, 2, or 3. The requirements of Control 3.0.4 do not apply in MODES 4 and 5, or in the other specified conditions of the Applicability (unless in MODE 1, 2, or 3) because the ACTIONS of individual Controls sufficiently define the remedial measures to be taken.

3/4.0 APPLICABILITY

BASES (Continued)

Control 3.0.5 establishes the allowance for restoring equipment to service under administrative controls when it has been removed from service or declared inoperable to comply with ACTIONS. The sole purpose of this Control is to provide an exception to Control 3.0.2 (e.g., to not comply with the applicable ACTION(s)) to allow the performance of SRs to demonstrate:

a. The OPERABILITY of the equipment being returned to service; or

b. The OPERABILITY of other equipment.

The administrative controls ensure the time the equipment is returned to service in conflict with the requirements of the ACTIONS is limited to the time absolutely necessary to perform the allows SRs. This Control does not provide time to perform any other preventative or corrective maintenance.

SR 4.0.1 through 4.0.5 establish the general requirements applicable to all Controls and apply at all times, unless otherwise stated.

SR 4.0.1 establishes the requirement that SRs must be met during the MODES or other specified conditions in the Applicability for which the requirements of the Control apply, unless otherwise specified in the individual SRs. This Control is to ensure that Surveillances are performed to verify the OPERABILITY of systems and components, and that variables are within specified limits. Failure to meet a Surveillance within the specified frequency, in accordance with SR 4.0.2, constitutes a failure to meet a Control.

Systems and components are assumed to be OPERABLE when the associated SRs have been met. Nothing in this Control, however, is to be construed as implying that systems or components are OPERABLE when:

a. The systems or components are known to be inoperable, although still meeting the SRs; or

b. The requirements of the Surveillance(s) are known to be not met between required Surveillance performances.

Surveillances do not have to be performed when the unit is in a MODE or other specified condition for which the requirements of the associated Control are not applicable, unless otherwise specified. The SRs associated with a Special Operations Control are only applicable when the Special Operations Control is used as an allowable exception to the requirements of a Control.

Surveillances, including Surveillances invoked by ACTIONS, do not have to be performed on inoperable equipment because the ACTIONS define the remedial measures that apply. Surveillances have to be met and performed in accordance with SR 4.0.2, prior to returning equipment to OPERABLE status.

3/4.0 APPLICABILITY

BASES (Continued)

Upon completion of maintenance, appropriate post maintenance testing is required to declare equipment OPERABLE. This includes ensuring applicable Surveillances are not failed and their most recent performance is in accordance with SR 4.0.2. Post maintenance testing may not be possible in the current MODE or other specified conditions in the Applicability due to the necessary unit parameters not having been established. In these situations, the equipment may be considered OPERABLE provided testing has been satisfactorily completed to the extent possible and the equipment is not otherwise believed to be incapable of performing its function. This will allow operation to proceed to a MODE or other specified condition where other necessary post maintenance tests can be completed.

SR 4.0.2 establishes the requirements for meeting the specified frequency for Surveillances and any ACTIONS with a completion time that requires the periodic performance of the ACTION on a "once per ..." interval.

SR 4.0.2 permits a 25% extension of the interval specified in the frequency. This extension facilitates Surveillance scheduling and considers plant operating conditions that may not be suitable for conducting the Surveillance (e.g., transient conditions or other ongoing Surveillance or maintenance activities).

The 25% extension does not significantly degrade the reliability that results from performing the Surveillance at its specified frequency. This is based on the recognition that the most probable result of any particular Surveillance being performed is the verification of conformance with the SRs. The exceptions to SR 4.0.2 are those Surveillances for which the 25% extension of the interval specified in the frequency does not apply. These exceptions are stated in the individual Controls.

As stated in SR 4.0.2, the 25% extension also does not apply to the initial portion of a periodic completion time that requires performance on a "once per ..." basis. The 25% extension applies to each performance after the initial performance. The initial performance of the ACTION, whether it is a particular Surveillance or some other remedial action, is considered a single action with a single completion time. One reason for not allowing the 25% extension to this completion time is that such an action usually verifies that no loss of function has occurred by checking the status of redundant or diverse components or accomplishes the function of the inoperable equipment in an alternative manner.

The provisions of SR 4.0.2 are not intended to be used repeatedly merely as an operational convenience to extend Surveillance intervals (other than those consistent with refueling intervals) or periodic completion time intervals beyond those specified.

3/4.0 APPLICABILITY

BASES (Continued)

SR 4.0.3 establishes the flexibility to defer declaring affected equipment inoperable or an affected variable outside the specified limits when a Surveillance has not been completed within the specified frequency. A delay period of up to 24 hours or up to the limit of the specified frequency, whichever is less, applies from the point in time that it is discovered that the Surveillance has not been performed in accordance with SR 4.0.2, and not at the time that the specified frequency was not met. This delay period provides adequate time to complete Surveillances that have been missed. This delay period permits the completion of a Surveillance before complying with ACTIONS or other remedial measures that might preclude completion of the Surveillance.

The basis for this delay period includes consideration of unit conditions, adequate planning, availability of personnel, the time required to perform the Surveillance, the safety significance of the delay in completing the required Surveillance, and the recognition that the most probable result of any particular Surveillance being performed is the verification of conformance with the requirements.

When a Surveillance with a frequency based not on time intervals, but upon specified unit conditions or operational situations, is discovered not to have been performed when specified, SR 4.0.3 allows the full delay period of 24 hours to perform the Surveillance.

SR 4.0.3 also provides a time limit for completion of Surveillances that become applicable as a consequence of MODE changes imposed by ACTIONS.

Failure to comply with specified frequencies for Surveillance Requirements is expected to be an infrequent occurrence. Use of the delay period established by SR 4.0.3 is a flexibility which is not intended to be used as an operational convenience to extend Surveillance intervals.

If a Surveillance is not completed within the allowed delay period, then the equipment is considered inoperable or the variable then is considered outside the specified limits and the completion times of the ACTIONS for the applicable Control conditions begin immediately upon expiration of the delay period. If a Surveillance is failed within the delay period, then the equipment is inoperable, or the variable is outside the specified limits and the completion times of the required ACTIONS for the applicable Control conditions begin immediately upon failure of the Surveillance.

Completion of the Surveillance within the delay period allowed by this Control, or within the completion time of the ACTIONS, restores compliance with SR 4.0.1.

SR 4.0.4 establishes the requirement that all applicable SRs must be met before entry into a MODE or other specified condition in the Applicability.

3/4.0 APPLICABILITY

BASES (Continued)

This Control ensures that system and component OPERABILITY requirements and variable limits are met before entry into MODES or other specified conditions in the Applicability for which these systems and components ensure safe operation of the unit.

However, in certain circumstances failing to meet an SR will not result in SR 4.0.4 restricting a MODE change or other specified condition change. When a system, subsystem, division, component, device, or variable is inoperable or outside its specified limits, the associated SR(s) are not required to be performed per SR 4.0.1 which states that surveillances do not have to be performed on inoperable equipment or variables outside specified limits. When equipment is inoperable, or variables are outside their specified limits, SR 4.0.4 does not apply to the associated SR(s) since the requirement for the SR(s) to be performed is removed. Therefore, failing to perform the Surveillance(s) within the specified frequency, on equipment that is inoperable, or on variables that are outside specified limits, does not result in an SR 4.0.4 restriction to changing MODES or other specified conditions in the Applicability. However, since the Control is not met in this instance, Control 3.0.4 will govern any restrictions that may (or may not) apply to MODE or other specified condition changes. The provisions of this Control should not be interpreted as endorsing the failure to exercise the good practice of restoring systems or components to OPERABLE status before entering an associated MODE or other specified condition in the Applicability.

The provisions of SR 4.0.4 shall not prevent changes in MODES or other specified conditions in the Applicability that are required to comply with ACTIONS. In addition, the provisions of SR 4.0.4 shall not prevent changes in MODES or other specified conditions in the Applicability that result from any unit shutdown.

The precise requirements for performance of SRs are specified such that exceptions to SR 4.0.4 are not necessary. The specific time frames and conditions necessary for meeting the SRs are specified in the frequency, in the Surveillance, or both. This allows performance of Surveillances when the prerequisite condition(s) specified in a Surveillance procedure require entry into the MODE or other specified condition in the Applicability of the associated Control prior to the performance or completion of a Surveillance. A Surveillance that could not be performed until after entering the Control Applicability would have its frequency specified such that it is not "due" until the specific conditions needed are met. Alternately, the Surveillance may be stated in the form of a note as not required (to be met or performed) until a particular event, condition, or time has been reached.

SR 4.0.4 is only applicable when entering MODE 3 from MODE 4, MODE 2 from MODE 3 or 4, or MODE 1 from MODE 2. Furthermore, SR 4.0.4 is applicable when entering any other specified condition in the Applicability only while operating in MODE 1, 2, or 3. The requirements of SR 4.0.4 do not apply in MODES 4 and 5, or in the other specified conditions of the Applicability (unless in MODE 1, 2, or 3) because the ACTIONS of individual Controls sufficiently define the remedial measures to be taken.

3/4.3 INSTRUMENTATION

BASES

3/4.3.7 MONITORING INSTRUMENTATION

3/4.3.7.9 RADIOACTIVE LIQUID EFFLUENT MONITORING INSTRUMENTATION

The radioactive liquid effluent instrumentation is provided to monitor and control, as applicable, the releases of radioactive materials in liquid effluents during actual or potential releases of liquid effluents. The alarm/trip setpoints for these instruments shall be calculated in accordance with the procedures in the ODCM to ensure that the alarm/trip will occur prior to exceeding the limits of 10CFR20. The OPERABILITY and use of this instrumentation is consistent with the requirements of 10CFR50, Appendix A, General Design Criteria 60, 63, and 64.

3/4.3.7.10 RADIOACTIVE GASEOUS EFFLUENT MONITORING INSTRUMENTATION

The radioactive gaseous effluent instrumentation is provided to monitor and control, as applicable, the releases of radioactive materials in gaseous effluents during actual or potential releases of gaseous effluents. The alarm setpoints for these instruments shall be calculated in accordance with the procedures in the ODCM to ensure that the alarm will occur prior to exceeding the limits of 10CFR20. The OPERABILITY and use of this instrumentation is consistent with the requirements of 10CFR50, Appendix A, General Design Criteria 60, 63, and 64.

3/4.11 RADIOACTIVE EFFLUENTS

BASES

3/4.11.1 LIQUID EFFLUENTS

3/4.11.1.1 CONCENTRATION

This Control is provided to ensure that the concentration of radioactive materials released in liquid waste effluents to UNRESTRICTED AREAS will be less than the concentration levels specified in 10CFR20, Appendix B, Table 2, Column 2. This limitation provides additional assurance that the levels of radioactive materials in bodies of water in UNRESTRICTED AREAS will result in exposures within (1) the Section II.A. design objectives of 10CFR50, Appendix I, to a MEMBER OF THE PUBLIC, and (2) the limits of 10CFR20 to the population. The concentration limit for dissolved and entrained noble gases is based upon the assumption that Xe-135 is the controlling radioisotope and its limiting effluent concentration in air (submersion) was converted to an equivalent concentration in water using the methods described in International Commission on Radiological Protection (ICRP) Publication 2.

This Control applies to the release of radioactive materials in liquid effluents from all units at the site.

The required detection capabilities for radioactive materials in liquid waste samples are tabulated in terms of the lower limits of detection (LLDs). Detailed discussion of the LLD, and other detection limits, can be found in:

(1) Currie, L. A.., "Lower Limit of Detection: Definition and Elaboration of a Proposed Position for Radiological Effluent and Environmental Measurements," NUREG/CR-4007 (September, 1984).

(2) HASL Procedures Manual, HASL-300 (revised annually).

3/4.11.1.2 DOSE

This Control is provided to implement the requirements of 10CFR50, Appendix I, Sections II.A, III.A and IV.A. The Control implements the guides set forth in of 10CFR50, Appendix I, Section II.A. The ACTION statements provide the required operating flexibility and at the same time implement the guides set forth in of 10CFR50, Appendix I, Section IV.A which assure that the releases of radioactive material in liquid effluents to UNRESTRICTED AREAS will be kept "as low as is reasonably achievable." Also, for fresh water sites with drinking water supplies which can be potentially affected by plant operations, there is reasonable assurance that the operation of the facility will not result in radionuclide concentrations in the finished drinking water that are in excess of the requirements of 40CFR141. The dose calculations in the ODCM implement the requirements in 10CFR50, Appendix I, Section III.A that conformance with the guides of 10CFR50, Appendix I be shown by calculational procedures based on models and data, such that the actual exposure of a MEMBER OF THE PUBLIC through appropriate pathways is unlikely to be substantially underestimated. The equations specified in the ODCM for calculating the doses due to the actual release rates of radioactive materials in liquid effluents

RADIOACTIVE EFFLUENTS

BASES

3/4.11.1.2 DOSE (Continued)

are consistent with the methodology provided in Regulatory Guide 1.109, "Calculation of Annual Doses to Man from Routine Releases of Reactor Effluents for the Purpose of Evaluating Compliance with 10 CFR Part 50, Appendix I, Revision 1", October 1977, and Regulatory Guide 1.113, "Estimating Aquatic Dispersion of Effluent from Accidental and Routine Reactor Releases for the Purpose of Implementing Appendix I," April 1977.

This Control applies to the release of liquid effluents from each reactor at the site. For units with shared radwaste treatment systems, the liquid effluents from the shared system are proportioned among the units sharing that system.

3/4.11.1.3 LIQUID RADWASTE TREATMENT SYSTEM

The OPERABILITY of the liquid radwaste treatment system ensures that this system will be available for use whenever liquid effluents require treatment prior to release to the environment.

The requirement that the appropriate portions of this system be used when specified provides assurance that the releases of radioactive materials in liquid effluents will be kept "as low as is reasonably achievable." This Control implements the requirements of 10CFR50.36a; 10CFR50, Appendix A, General Design Criterion 60; and the design objective given in 10CFR50, Appendix I, Section II.D. The specified limit governing the use of appropriate portions of the liquid radwaste treatment system were specified as a suitable fraction of the dose design objectives set forth in 10CFR50, Appendix I, Section II.A, for liquid effluents.

This Control applies to the release of liquid effluents from each reactor at the site. For units with shared radwaste treatment systems, the liquid effluents from the shared system are proportioned among the units sharing the system.

RADIOACTIVE EFFLUENTS

BASES

3/4.11.2 GASEOUS EFFLUENTS

3/4.11.2.1 DOSE RATE

This Control is provided to ensure that the dose any time at and beyond the SITE BOUNDARY from gaseous effluents from all units on the site will be within the annual dose limits of 10CFR20 for UNRESTRICTED AREAS. The annual dose rate limits are those associated with the concentrations of those limiting effluent concentrations, as described in Regulatory Guide 1.109. These limits provide reasonable assurance that radioactive material discharged in gaseous effluents will not result in the exposure of a MEMBER OF THE PUBLIC in an UNRESTRICTED AREA, either within or outside the SITE BOUNDARY, to annual average concentrations exceeding the limits specified in 10CFR20, Appendix B, Table II. For MEMBERS OF THE PUBLIC who may at times be within the SITE BOUNDARY, the occupancy of the MEMBER OF THE PUBLIC will be sufficiently low to compensate for any increase in the atmospheric diffusion factor above that for the SITE BOUNDARY. Examples of calculations for such MEMBERS OF THE PUBLIC, with appropriate occupancy factors, shall be given in the ODCM. The specified release rate limits restrict, at all times, the corresponding gamma and beta dose rates above background to a MEMBER OF THE PUBLIC at or beyond the SITE BOUNDARY to less than or equal to 500 mrems/year to the whole body or to less than or equal to 3000 mrems/year to the skin. These release rate limits also restrict, at all times, the corresponding thyroid dose rate above background to a child via the inhalation pathway to less than or equal to 1500 mrems/year.

This Control applies to the release of radioactive materials in gaseous effluents from all reactors at the site. The required detection capabilities for radioactive material in gaseous waste samples are tabulated in terms of the lower limit of detection (LLDs). Detailed discussion of the LLD and other detection limits can be found in:

(1) Currie, L. A., "Lower Limit of Detection: Definition and Elaboration of a Proposed Position for Radiological Effluent and Environmental Measurements," NUREG/CR-4007 (September 1984).

(2) HASL Procedures Manual, HASL-300 (revised annually).

3/4.11.2.2 DOSE - NOBLE GASES

This Control is provided to implement the requirements of 10CFR50, Appendix I, Sections II.B, III.A and IV.A. The Control implements the guides set forth in 10CFR50, Appendix I, Section II.B. The ACTION statements provide the required operating flexibility and at the same time implement the guides set forth in 10CFR50, Appendix I, Section IV.A to assure that the releases of radioactive material in gaseous effluents to UNRESTRICTED AREAS will be kept "as low as is reasonably achievable." The Surveillance Requirements implement the requirements in 10CFR50, Appendix I, Section III.A that conformance with the guides of 10CFR50, Appendix I, be shown by calculational procedures based on models and data such that the actual exposure of a MEMBER OF THE PUBLIC

RADIOACTIVE EFFLUENTS

BASES

3/4.11.2.2 DOSE - NOBLE GASES (Continued)

through appropriate pathways is unlikely to be substantially underestimated. The dose calculations established in the ODCM for calculating the doses due to the actual release rates of radioactive noble gases in gaseous effluents are consistent with the methodology provided in Regulatory Guide 1.109, "Calculation of Annual Doses to Man from Routine Releases of Reactor Effluents for the Purpose of Evaluating Compliance with 10CFR50, Appendix I, Revision 1", October 1977, and Regulatory Guide 1.111, "Methods for Estimating Atmospheric Transport and Dispersion of Gaseous Effluents in Routine Releases from Light-Water Cooled Reactors," Revision 1, July 1977. The ODCM equations provided for determining the air doses at and beyond the SITE BOUNDARY are made using meteorological conditions concurrent with the time of release of radioactive materials in gaseous effluents or are based upon the historical average atmospheric conditions.

This Control applies to the release of radioactive materials in gaseous effluents from each reactor at the site. For units with shared radwaste treatment systems, the gaseous effluents from the shared system are proportioned among the units sharing that system.

3/4.11.2.3 DOSE - IODINE-131, IODINE-133, TRITIUM AND RADIONUCLIDES IN PARTICULATE FORM

This Control is provided to implement the requirements of 10CFR50, Appendix I, Sections II.C, III.A and IV.A. The Controls are the guides set forth in 10CFR50, Appendix I, Section II.C. The ACTION statements provide the required operating flexibility and at the same time implement the guides set forth in 10CFR50, Appendix I, Section IV.A, to assure that the releases of radioactive materials in gaseous effluents to UNRESTRICTED AREAS will be kept "as low as is reasonably achievable." The ODCM calculational methods specified in the Surveillance Requirements implement the requirements in 10CFR50, Appendix I, Section III.A, that conformance with the guides of 10CFR50, Appendix I be shown by calculational procedures based on models and data, such that the actual exposure of a MEMBER OF THE PUBLIC through appropriate pathways is unlikely to be substantially underestimated. The ODCM calculational methods for calculating the doses due to the actual release rates of the subject materials are consistent with the methodology provided in Regulatory Guide 1.109, "Calculation of Annual Doses to Man from Routine Releases of Reactor Effluents for the Purpose of Evaluating Compliance with 10CFR50, Appendix I," Revision 1, October 1977, and Regulatory Guide 1.111, "Methods for Estimating Atmospheric Transport and Dispersion of Gaseous Effluents in Routine Releases from Light-Water-Cooled Reactors," Revision 1, July 1977. These equations also provide for determining the actual doses using meteorological conditions concurrent with the time of release of radioactive materials in gaseous effluents or are based upon the historical average atmospheric conditions. The release rate specifications for iodine-131, iodine-133, tritium and radionuclides in particulate form are dependent on the existing radionuclide pathway to man in the areas at and beyond the SITE BOUNDARY. The pathways which were examined in the development

3/4.11.2.3 DOSE - IODINE-131, IODINE-133, TRITIUM AND RADIONUCLIDES IN PARTICULATE FORM (Continued)

of these calculations were: (1) individual inhalation of airborne radionuclides, (2) deposition of radionuclides onto green leafy vegetation with subsequent consumption by man, (3) deposition onto grassy areas where milk animals and meat-producing animals graze with consumption of the milk and meat by man, and (4) deposition on the ground with subsequent exposure of man.

This Control applies to the release of radioactive materials in gaseous effluents from each reactor at the site. For units with shared radwaste treatment systems, the gaseous effluents from the shared system are proportioned among the units sharing that system.

3/4.11.2.4 AND 3/4.11.2.5 GASEOUS RADWASTE TREATMENT (OFFGAS) SYSTEM AND VENTILATION EXHAUST TREATMENT SYSTEMS

The OPERABILITY of the GASEOUS RADWASTE TREATMENT (OFFGAS) SYSTEM and the VENTILATION EXHAUST TREATMENT SYSTEMS ensures that the systems will be available for use whenever gaseous effluents require treatment prior to release to the environment. The requirement that the appropriate portions of the systems be used, when specified, provides reasonable assurance that the releases of radioactive materials in gaseous effluents will be kept "as low as is reasonably achievable." This Control implements the requirements of 10CFR50.36a; 10CFR50, Appendix A, General Design Criterion; and the design objectives given in 10CFR50, Appendix I, Section II.D. The specified limits governing the use of appropriate portions of the systems were specified as a suitable fraction of the dose design objectives set forth in 10CFR50, Appendix I, Sections II.B and II.C, for gaseous effluents.

This Control applies to the release of radioactive materials in gaseous effluents from each reactor at the site. For units with shared radwaste treatment systems, the gaseous effluents from the shared system are proportional among the units sharing that system.

RADIOACTIVE EFFLUENTS

BASES

3/4.11.4 TOTAL DOSE

This Control is provided to meet the dose limitations of 40CFR190 that have been incorporated into 10CFR20 by 46 FR 18525. The Control requires the preparation and submittal of a Special Report whenever the calculated doses due to releases of radioactivity and to radiation from uranium fuel cycle sources exceed 25 mrems to the whole body or any organ, except the thyroid, which shall be limited to less than or equal to 75 mrems. For sites containing up to four reactors, it is highly unlikely that the resultant dose to a MEMBER OF THE PUBLIC will exceed the dose limits of 40CFR190, if the individual reactors remain within twice the dose design objectives of 10CFR50, Appendix I, and if direct radiation doses from the units including outside storage tanks, etc. are kept small. The Special Report will describe a course of action that should result in the limitation of the annual dose to a MEMBER OF THE PUBLIC to within the 40CFR190 limits. For the purposes of the Special Report, it may be assumed that the dose commitment to the MEMBER OF THE PUBLIC from other uranium fuel cycle sources is negligible, with the exception that dose contributions from other nuclear fuel cycle facilities at the same site or within a radius of 8 km must be considered. If the dose to any MEMBER OF THE PUBLIC is estimated to exceed the requirements of 40CFR190, the Special Report with a request for a variance (provided the release conditions resulting in violation of 40CFR190 have not already been corrected), in accordance with the provisions of 40CFR190.11 and 10CFR20.405c, is considered to be a timely request and fulfills the requirements of 40CFR190 until NRC staff action is completed. The variance only relates to the limits of 40CFR190, and does not apply in any way to the other requirements for dose limitation of 10CFR20, as addressed in ODCM Controls 3.11.1.1 and 3.11.2.1. An individual is not considered a MEMBER OF THE PUBLIC during any period in which he/she is engaged in carrying out any operation that is part of the nuclear fuel cycle.

3/4.12 RADIOLOGICAL ENVIRONMENTAL MONITORING

BASES

3/4.12.1 MONITORING PROGRAM

The Radiological Environmental Monitoring Program required by this Control provides representative measurements of radiation and of radioactive materials in those exposure pathways and for those radionuclides that lead to the highest potential radiation exposures of MEMBERS OF THE PUBLIC resulting from the plant operation. This monitoring program implements 10CFR50, Appendix I, Section IV.B.2, and thereby supplements the Radiological Effluent Monitoring Program by verifying that the measurable concentrations of radioactive materials and levels of radiation are not higher than expected on the basis of the effluent measurements and the modeling of the environmental exposure pathways. Guidance for this monitoring program is provided by the Radiological Assessment Branch Technical Position on Environmental Monitoring, Revision 1, November 1979. The initially specified monitoring program will be effective for at least the first 3 years of commercial operation. Following this period, program changes may be initiated based on operational experience.

The required detection capabilities for environmental sample analyses are tabulated in terms of the lower limits of detection (LLDs). The LLDs required by ODCM Table 4.12-1 are considered optimum for routine environmental measurements in industrial laboratories. It should be recognized that the LLD is defined as an *a priori* (before the fact) limit representing the capability of a measurement system and not as an *a posteriori* (after the fact) limit for a particular measurement.

Detailed discussion of the LLD, and other detection limits, can be found in:

(1) Currie, L. A. "Lower Limit of Detection: Definition and Elaboration of a Proposed Position for Radiological Effluent and Environmental Measurements," NUREG/CR-4007 (September 1984).

(2) HASL Procedure Manual, HASL-300 (revised annually).

3/4.12.2 LAND USE CENSUS

This Control is provided to ensure that changes in the use of areas at and beyond the SITE BOUNDARY are identified and that modifications to the radiological environmental monitoring program given in the ODCM are made if required by the results of the census. The best information from door-to-door survey, visual or aerial survey or from consulting with local agricultural authorities shall be used. This census satisfies the requirements of 10CFR50, Appendix I, Section IV.B.3. Restricting the census to gardens of greater than 50 m^2 provides assurance that significant exposure pathways via leafy vegetables will be identified and monitored since a garden of this size is the minimum required to produce the quantity (26 kg/year) of leafy vegetables assumed in Regulatory Guide 1.109 for consumption by a child. To determine this minimum garden size, the following assumptions were made: (1) 20% of the garden was used for growing broad leaf vegetation (i.e., similar to lettuce and cabbage), and (2) a vegetation yield of 2 kg/m^2.

RADIOLOGICAL ENVIRONMENTAL MONITORING

BASES

3/4.12.3 INTERLABORATORY COMPARISON PROGRAM

The requirement for participation in an approved Interlaboratory Comparison Program is provided to ensure that independent checks on the precision and accuracy of the measurements of radioactive material in environmental sample matrices are performed as part of the quality assurance program for environmental monitoring in order to demonstrate that the results are valid for the purposes of 10CFR50, Appendix I, Section IV.B.2.

6.0

ADMINISTRATIVE CONTROLS

ADMINISTRATIVE CONTROLS

ANNUAL REPORTS

ANNUAL RADIOLOGICAL ENVIRONMENTAL OPERATING REPORT

6.9.1.6 Routine radiological environmental operating reports covering the operation of the unit during the previous year shall be submitted prior to May 1 of each year.

The annual Radiological Environmental Operating Report shall include:

a. Summaries, interpretations, and an analysis of trends of the results of the radiological environmental surveillance activities for the report period, including a comparison with pre-operational studies, operational controls (as appropriate). and previous environmental surveillance reports and an assessment of the observed impacts of the plant operation on the environment;

b. The results of land use censuses required by Control 3.12.2;

c. The results of analysis of all radiological environmental samples and of all locations specified in the table and figures in the Offsite Dose Calculation Manual, as well as summarized and tabulated results of these analyses and measurements in the format of the table in the Radiological Assessment Branch Technical Position, Revision 1, November 1979. In the event that some individual results are not available for inclusion with the report, the report shall be submitted noting and explaining the reasons for the missing results. The missing data shall be submitted as soon as possible in a supplementary report;

d. A summary description of the Radiological Environmental Monitoring Program; at least two legible maps* covering all sampling locations keyed to a table giving distances and directions from the centerline of one reactor; the results of licensee participation in the Inter-laboratory Comparison Program and the corrective action taken if the specified program is not being performed as required by Control 3.12.3; reasons for not conducting the Radiological Environmental Monitoring Program as required by Control 3.12.1, and discussion of all deviations from the sampling schedule of Table 3.12.1-1; discussion of environmental sample measurements that exceed the reporting levels of Table 3.12.1-2 but are not the result of plant effluents, pursuant to ACTION b of Control 3.12.1; and discussion of all analyses in which the LLD required by Table 4.12.1-1 was not achievable.

*One map shall cover stations near the SITE BOUNDARY; a second shall include the more distant stations.

ANNUAL RADIOACTIVE EFFLUENT RELEASE REPORT

6.9.1.7 Routine radioactive release reports covering the operation of the unit during the previous year shall be submitted annually. The report must be submitted as specified in 10CFR50.4 and the time between submission of reports must be no longer than 12 months.

The annual Radioactive Effluent Release Report shall include:

a. A summary of the quantities of radioactive liquid and gaseous effluents released from the unit as outlined in Regulatory Guide 1.21, "Measuring, Evaluating, and Reporting Radioactivity in Solid Wastes and Releases of Radioactive Materials in Liquid and Gaseous Effluents from Light-Water-Cooled Nuclear Power Plants," Revision 1, June 1974, with data summarized on a quarterly basis following the format of Appendix B thereof.

b. A summary of hourly meteorological data collected over the previous year. This annual summary may be either in the form of an hour-by-hour listing on magnetic tape of wind speed, wind direction, atmospheric stability, and precipitation (if measured), or in the form of joint frequency distributions of wind speed, wind direction, and atmospheric stability.* This report shall include an assessment of the radiation doses due to the radioactive liquid and gaseous effluents released from the unit or station during the previous year. This report shall also include an assessment of the radiation doses from radioactive liquid and gaseous effluents to MEMBERS OF THE PUBLIC due to their activities inside the SITE BOUNDARY (see Figure 3.2-1) during the report period. All assumptions used in making these assessments, i.e., specific activity, exposure time, and location, shall be included in these reports. The assessment of radiation doses shall be performed in accordance with the methodology and parameters in the OFFSITE DOSE CALCULATION MANUAL (ODCM).

c. An assessment of radiation doses to the likely most exposed MEMBER OF THE PUBLIC from reactor releases and other nearby uranium fuel cycle sources, including doses from primary effluent pathways and direct radiation, for the previous calendar year to show conformance with 40CFR190, "Environmental Radiation Protection Standards for Nuclear Power Operation." Acceptable methods for calculating the dose contribution from liquid and gaseous effluents are given in Regulatory Guide 1.109, Rev. 1, October 1977.

*In lieu of submission with the annual Radioactive Effluent Release Report, the licensee has the option of retaining this summary of required meteorological data on site in a file that shall be provided to the NRC upon request.

ADMINISTRATIVE CONTROLS

ANNUAL RADIOACTIVE EFFLUENT RELEASE REPORT (Continued)

d. A list and description of unplanned releases from the site to UNRESTRICTED AREAS (see Figure 3.2-1) of radioactive materials in gaseous and liquid effluents made during the reporting period.

e. Any changes made during the reporting period to the OFFSITE DOSE CALCULATION MANUAL (ODCM), pursuant to PNPP Technical Specification 5.5.1 as well as any major change to Liquid or Gaseous Treatment Systems pursuant to Control 6.15. It shall also include a listing of new locations for dose calculations and/or environmental monitoring identified by the Land Use Census pursuant to Control 3.12.2.

f. The report shall also include the following: an explanation as to why the inoperability of liquid or gaseous effluent monitoring instrumentation was not corrected within the time specified in Control 3.3.7.9 or 3.3.7.10, respectively; and description of the events leading to liquid holdup tanks exceeding total curie limits.

SPECIAL REPORTS

6.9.2 Special reports shall be submitted in accordance with 10CFR50.4 within the time period specified for each report.

6.10 RECORD RETENTION

6.10.1 In addition to the applicable record retention requirements of Title 10 Code of Federal Regulations, the following records shall be retained for at least the minimum period indicated.

6.10.2 Records of surveillance activities, inspections, and calibrations required by these Controls shall be retained for at least 5 years:

6.15 MAJOR CHANGES TO RADIOACTIVE WASTE TREATMENT SYSTEMS*

6.15.1 Licensee initiated major changes to the radioactive waste systems, liquid, gaseous and solid:

*Licensee may choose to submit the information called for in this Control as part of the annual USAR update.

1. Shall be reported to the Commission in the annual Radioactive Effluent Release Report for the period in which the evaluation was reviewed by the PORC. The discussion of each change shall contain:

   a. A summary of the evaluation that led to the determination that the change could be made in accordance with 10CFR50.59;
   b. Sufficient detailed information to totally support the reason for the change without benefit of additional or supplemental information;
   c. A detailed description of the equipment, components and processes involved and the interfaces with other plant systems
   d. An evaluation of the change which shows the predicted releases of radioactive materials in liquid and gaseous effluents and/or quantity of solid waste that differ from those previously predicted in the license application and amendments thereto;
   e. An evaluation of the change which shows the expected maximum exposures to MEMBERS OF THE PUBLIC in the UNRESTRICTED AREA and to the general population that differ from those previously estimated in the license application and amendments thereto;
   f. A comparison of the predicted releases of radioactive materials, in liquid and gaseous effluents and in solid waste, to the actual releases for the period prior to when the changes are to be made;
   g. An estimate of the exposure to plant operating personnel as a result of the change; and

2. Shall become effective upon review and approval by the Plant Manager.

*Licensee may choose to submit the information called for in this Control as part of the annual USAR update.

Records

The following records are generated by this document:

Quality Assurance Records

Annual Radioactive Effluent Release Report

Non-Quality Records

None

REFERENCES

1. Title 10, "Energy," Chapter 1, Code of Federal Regulations; Part 20, U.S. Government Printing Office, Washington, D.C. 20402, May 21, 1991.

2. Title 10, "Energy," Chapter 1, Code of Federal Regulations; Part 50; U.S. Government Printing Office, Washington, D.C. 20402, January 1, 1984.

3. Title 40, "Protection of Environment," Chapter 1, Code of Federal Regulations, Part 190, Federal Register, Vol. 42, Washington, D.C. 20402, January 13, 1977.

4. U.S. Nuclear Regulatory Commission, "Preparation of Radiological Effluent Technical Specifications for Nuclear Power Plants," USNRC NUREG-0133, Washington, D.C. 20555, October, 1981.

5. U.S. Nuclear Regulatory Commission, "Draft Radiological Effluent Technical Specifications for PWR's," USNRC NUREG-0473, Revision 2, Washington, D.C. 20555, February, 1980.

6. Regulatory Guide 1.21, "Measuring, Evaluating, and Reporting Radioactivity in Solid Wastes and Releases of Radioactive Materials in Liquid and Gaseous Effluents from Light-Water-Cooled Nuclear Power Plants," Revision 1, U.S. Nuclear Regulatory Commission, Washington, D.C. 20555, June 1974.

7. Regulatory Guide 1.109, "Calculation of Annual Doses to Man from Routine Releases of Reactor Effluents for the Purpose of Evaluating Compliance with 10CFR 50, Appendix I," Revision 0, U.S. Nuclear Regulatory Commission, Washington, D.C. 20555, March 1976.

8. Regulatory Guide 1.109, "Calculation of Annual Doses to Man from Routine Releases of Reactor Effluents for the Purpose of Evaluating Compliance with 10CFR Part 50, Appendix I," Revision 1, U.S. Nuclear Regulatory Commission, Washington, D.C. 20555, October 1977.

9. Regulatory Guide 1.111, "Methods for Estimating Atmospheric Transport and Dispersion of Gaseous Effluents in Routine Releases from Light-Water-Cooled Reactors," Revision 1, U.S. Nuclear Regulatory Commission, Washington, D.C. 20555, July 1977.

10. Regulatory Guide 1.113, "Estimating Aquatic Dispersion of Effluents from Accidental and Routine Reactor Releases for the Purpose of Implementing Appendix I," Revision 1, U.S. Nuclear Regulatory Commission, Washington, D.C. 20555, April 1977.

REFERENCES (Cont.)

11. Regulatory Guide 4.15, "Quality Assurance for Radiological Monitoring Programs (Normal Operation) - Effluent Streams and the Environment," U.S. Nuclear Regulatory Commission, Washington, D.C. 20555, February 1979.

12. U.S. Nuclear Regulatory Commission, "Branch Technical Position," Revision 1, Washington, D.C. 20555, November 1979.

13. Perry Nuclear Power Plant, Unit 1 and 2, "Final Safety Analysis Report," Amendment 14, The Cleveland Electric Illuminating Company, Perry, Ohio 44081, August 1984.

14. Perry Nuclear Power Plant, Units 1 and 2, "Environmental Report, Operating License Stage," Supplement 3, The Cleveland Electric Illuminating Company, Perry, Ohio 44081, November 1981.

15. Perry Nuclear Power Plant, Units 1 and 2, "Radiological Environmental Monitoring Program Manual," The Cleveland Electric Illuminating Company, Perry, Ohio 44081, February 1985.

16. "Midas User's Manual, for the Cleveland Electric Illuminating Company, Perry Nuclear Power Plant," Pickard, Lowe and Garrick, Washington, D.C. 20036, July 1983.

17. Kocher, D.C., "Radioactive Decay Data Tables," Technical Information Center, U.S. Department of Energy, Springfield, Virginia 22161, September 1985.

18. 1989 Engineering Report "Lake Erie Potable Water Facilities and Intakes within 50 Miles of PNPP, (Ref. SO-11552 "E").

19. Perry Environmental Report Operating License Stage, Table 5.1-10 "Annual Average Dilution Factors for Lake Water Intakes within 50 Miles of PNPP and Q&R Page 2.1-2.

20. PNPP Ohio Power Siting Commission application of August 1974, Appendix 1304-C-2, Table IV-A-2.

21. Total Angler Catch (1987 annual) for Each Grid Location; per letter from Michael R. Rawson, Fairport Fisheries Research Station, Ohio Department of Natural Resources (6-20-88).

22. Offsite Dose Calculation Manual Guidance: Standard Radiological Effluent Controls for Boiling Water Reactors; Generic Letter 89-01, Supplement No. 1.

23. Federal Guidance Report 13 CD Supplement: Cancer Risk Coefficients for Environmental Exposure to Radionuclides.