71-9228

GE Nuclear Energy

Vallecitos Nuclear Center
6705 Vallecitos Road
Sunol, CA 94586
925-862-4344

May 4, 2005
CM05016

John D. Monninger, Chief
Licensing Section
Spent Fuel Project Office
Office of Nuclear Material and Safeguards
Washington, D.C. 20555-0001

Attention: Document Control Desk

Reference: 1) USNRC Certificate of Compliance No. 9228, Docket Number 71-9228.
2) NEDO-31581, "Model 2000 Radioactive Material Transport Package Safety Analysis Report", dated April 1988.
3) USNRC Submittal dated March 25, 2005, Re: Request for "–96" designation and the Horizontal Transportation of LWR Spent Fuel and Hardware/Radioisotope Materials Up to 2000 watts of Decay Heat.

Dear Mr. Monninger:

Enclosed are six copies of the revised Appendix 5.5.5 (Reference 2) previously submitted in our initial application dated March 25, 2005 (Reference 3). The revised certificate amendment requests the approval for the horizontal transportation of hardware/radioisotope materials, up to 600 watts of decay heat, instead that the 2000 watts previously requested.

Please contact the undersigned if you require additional information.

Very truly yours,

FOR
David W. Turner
E-mail: david.turner@gene.ge.com

Attachments

cc: C. Martinez, GE
L. Quintana, GE
R. Pomares, GE

NMSS01

ATTACHMENT

Appendix 5.5.5

Horizontal Shipment of the Model 2000 Transportation Package with LWR SNF and 600 Watt Decay Heat Source — Shielding Analysis

Appendix 5.5.5 Horizontal Shipment of the Model 2000 Transportation Package with LWR SNF and 600 Watt Decay Heat Source — Shielding Analysis

1.0 PURPOSE

The purpose of this calculation is to determine the dose rates for the Model 2000 package when transporting LWR spent fuel and hardware/radioisotope materials in the horizontal position. Materials decay heat contentment is limited to 600 watts.

2.0 METHODOLOGY

The methodology of Section 5.5.4 of the Model 2000 Safety Analysis Report (SAR) [4.1] for calculating dose rates is to be the basis for this analysis. The Model 2000 package needs to be shipped in a horizontal position under certain conditions. As a result of tilting the package to a horizontal position, the original bottom of the package becomes the back and the original top of the cask becomes the front of the package. Figure 1 shows the horizontal shipping configuration.

Dose rates are calculated at three locations: On contact of the bottom of the shipping overpack, at a distance of 2 meters from the back end of the truck, and at the cab of the truck. The distance to the cab of the truck from the front over pack is 254.23 inches (6.45 m). The 2 m dose rate for exclusive use is measured from the back end of the truck and is thus 5.93 m from the closest approachable surface a the back. Figure 1 shows the distance from the front of the package (the cradle) to the cab to be 6.4 m. In the cab dose rate analysis, the distance from the front overpack to the cab was taken to be 6.4 m, thus making this calculation conservative (credit was not taken for an additional 13.75").

Dose rates are calculated for two types of sources: Light Water Reactor (LWR) spent nuclear fuel (SNF), and a Co-60 source with 600 Watts of decay heat. The source for the LWR SNF is the same source as was used in the shielding evaluation of the Cask 2000 SAR [4.1], and the Co-60 source is the same source as was used in the shielding evaluation of the Model 2000 Decay Heat Upgrade SAR [4.2], with the exception of being a 600 Watt source instead of a 2000 Watt source. The Co-60 source was selected as the bounding 600 Watt decay heat source as a result of its high energy photons (1.173 and 1.332 MeV), which penetrate the cask body more easily. Dose rates were calculated using the GE Level-2 ECP MCNP01A.

All dose rates from Section 5.1 of the Model 2000 SAR [4.1] for the LWR SNF and from Section 5.1 of the are Model 2000 Decay Heat Upgrade SAR [4.2] for the Co-60 source are valid and bounding with the exception of the normal condition original bottom (now back) and the cab (now front) dose rates.

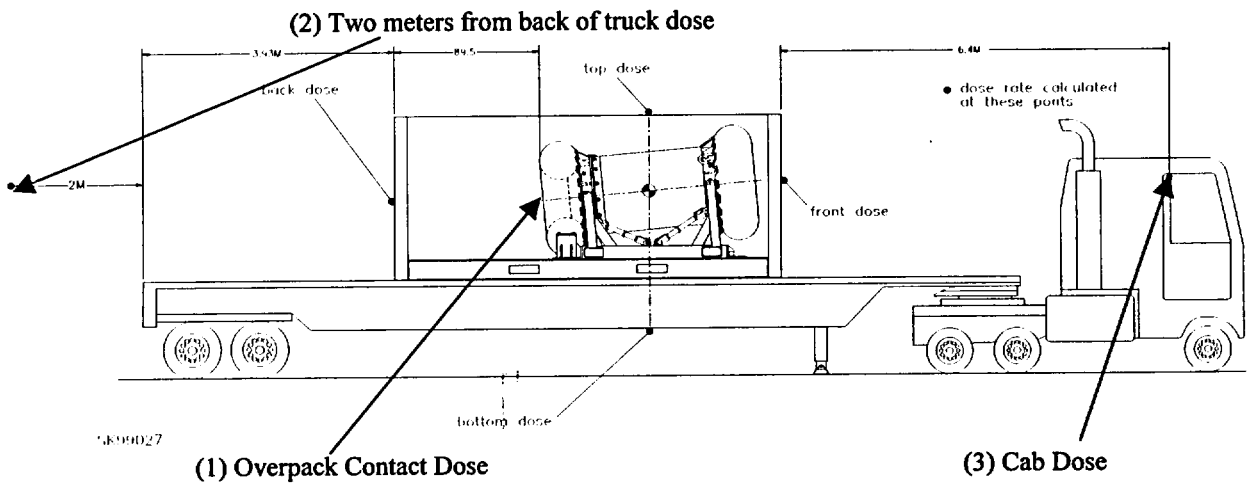

Figure 1 – Horizontal Shipment Normal Dose Rate Locations (dimensions in meters and inches)

As was similarly done in Section 5.5.4.7 of the Model 2000 SAR [4.1], the dose rates of interest are (1) at the contact back surface of the package (labeled as "Overpack Contact Dose" in Figure 1), (2) two meters from the back surface of the truck, and (3) at the cab of the vehicle from the front of the cask.

3.0 INPUTS/ASSUMPTIONS

3.1 LWR SNF Source

3.1.1 Gamma Source Term

The gamma source term for the LWR SNF is identical to the gamma source specified in Section 5.2.1 of the Model 2000 SAR [4.1]. Table 5.2.1.1 of the SAR [4.1] is recreated below.

Table 1 – LWR Fuel Gamma Source Term

Group	Total Group Production Rate (photons/sec)	Group Average Energy (MeV)
1	4.077E-10	1.500E-02
2	1.483E+12	2.500E-02
3	4.777E+11	3.500E-02
4	6.210E+12	4.500E-02
5	1.617E+10	5.500E-02
6	9.120E+08	6.500E-02
7	8.036E+05	7.500E-02
8	2.003E+13	8.500E-02

Group	Total Group Production Rate (photons/sec)	Group Average Energy (MeV)
9	9.592E+10	9.500E-02
10	1.606E+14	1.500E-01
11	9.590E+12	2.500E-01
12	8.194E+11	3.500E-01
13	2.651E+14	4.750E-01
14	6.571E+14	6.500E-01
15	1.030E+15	8.250E-01
16	1.029E+13	1.000E+00
17	5.039E+12	1.225E+00
18	8.363E+12	1.475E+00
19	6.630E+10	1.700E+00
20	2.127E+10	1.900E+00
21	6.485E+12	2.100E+00
22	5.430E+11	2.300E+00
23	7.741E+10	2.500E+00
24	2.055E+00	2.700E+00
25	2.838E+09	3.000E+00
TOTAL	2.183E+15	

3.1.2 Neutron Source Term

The neutron source term is 8.75E+07 neutrons/sec, as stated in Section 5.2.2 of the SAR [4.1]. The Cf-252 neutron energy spectrum is used in the MCNP01A runs.

3.1.3 MCNP01A Model Description

The geometry of the cask and overpack is described in the Reference [4.3] and [4.4] drawings. Credit was taken for the optional lead-filled liner in Section 5.1 of the Model 2000 SAR [4.1] to provide additional photon shielding; this lead-filled liner [4.5] is also used in this analysis. The key cask and overpack dimensions are provided below.

<u>Cask</u>
Inside Height = 137.16 cm (54")
Inside Radius =33.655 cm (13.25")
Cavity Shell = 2.54 cm (1")
Lead shield on side = 10.16 cm (4")
Stainless steel at bottom = 15.24 cm (6")
Outside diameter = 97.79 cm (38.5")
Cask Lid (lead) = 14.2748 cm (5.62")
Cask lid bottom shell = 3.81 cm (1.5")
Cask Lid top shell = 3.81 cm (1.5")
Cask Lid side shell = 2.54 cm (1")

Overpack
Inner shell side = 1.27 cm (0.5")
Thickness of support plate = 1.27 cm (0.5")
Air gap between shells (bottom) = 10.16 cm (4")
Air gap between shells (side) = 7.62 cm (3")
Outer shell is 1.27 cm (0.5") on the top and bottom and 1.27 cm (0.5") on the side
Top honeycomb = 15.24 cm (6")
Top torus =60.96 cm (24")
Bottom torus =60.96 cm (24")

All stainless steel was assumed to have a density of 7.8 g/cm^3 and a composition of 72% by weight of iron, 2% manganese, 18% chromium, and 8% nickel. The density of lead was taken as 11.34 g/cm^3. Air was taken to be at a density of 0.001293 g/cm^3.

The source geometry for the LWR SNF source is identical to the source as described in Section 5.2 of the Model 2000 SAR [4.1]. It is a 3.73" diameter, 45" long cylindrical source consisting of uranium oxide and zirconium. The source density was conservatively chosen to be 3 g/cm^3.

The flux to dose conversion was done using the ANSI/ANS-6.1.1-1977 standard [4.9].

3.2 Co-60 Source

3.2.1 Gamma Source Term

The gamma source term for the Co-60 source is identical to the gamma source specified in Table 5.2.1 of the Model 2000 Decay Heat Upgrade SAR [4.2], with the exception of reducing the source to 600 Watts from 2000 Watts. The applicable portion is provided below.

Table 2 – Co-60 Gamma Source Term

Isotope	Group Production Rate (photons/sec)	Group Average Energy (MeV)
Co-60	1.44E+15 1.44E+15	1.173 1.332

No neutron source is applicable for the Co-60 source.

3.2.2 MCNP01A Model Description

The geometry of the cask and overpack is described in the Reference [4.3] and [4.4] drawings. As described in Table 5.1.2 of the Model 2000 Decay Heat Upgrade SAR [4.2], the shipping configuration of this source consists of the barrel rack [4.6] with a 7" minimum wall thickness and the material basket [4.7] with a 1.25" minimum tungsten plug thickness. The barrel rack and

material basket were modeled in this analysis. Due to the nature of the high-energy photons from Co-60, credit was taken for the lead-filled liner [4.5]. The key cask and overpack dimensions, as well as material densities and dose conversion factors, are provided in Section 2.1.3 of this analysis.

The source geometry for the Co-60 source is identical to the source in Table 5.1.2 of the Model 2000 Decay Heat Upgrade SAR [4.2]. It is a 9/16" diameter cylinder made of nickel, with a density of 8.9 g/cm^3.

Gamma dose rates for the front (at the cab) are found in the file "Co60_Front_Pb.out". The gamma dose rates for the location 2 meters from the back of the truck are found in the file "Co60_Back_Pb.out". The dose rate at the bottom contact surface of the overpack is found in the file "Co60_Back_Contact_600Watts.inp."

4.0 ANALYSIS/RESULTS

Tables 3 and 4 below present the results of the dose rates for the locations of interest. All other normal condition and all accident condition dose rates for the LWR SNF and Co-60 sources are bounded by the dose rates in Section 5 of the Model 2000 SAR [4.1] and Model 2000 Decay Heat Upgrade SAR [4.2], respectively. All dose rates are presented as the calculated dose rate + 2σ.

Table 3 – Summary of LWR SNF Source Dose Rates

Normal Conditions	Back Surface of Overpack (mrem/hr)	2 Meters from the Back Surface of Truck (mrem/hr)	Cab of Vehicle from Front (mrem/hr)
Gamma	101.1	1.29	5.8E-03
Neutron	24.4	0.22	0.24
Total	125.5	1.51	0.25
49 CFR Part 173.441 Limit	200	10	2

Table 4 – Summary of Co-60 Source Dose Rates

Normal Conditions	Back Surface of Overpack (mrem/hr)	2 Meters from the Back Surface of Truck (mrem/hr)	Cab of Vehicle from Front (mrem/hr)
Total	167	5.68 **	9.4E-03 **
49 CFR Part 173.441 Limit	200	10	2

** Note: The dose rates at 2 meters from the back surface of the truck and at the cab of the vehicle were calculated using a 2000 Watt Co-60 decay heat source instead of the 600 Watt Co-60 decay heat source, which is conservative. The dose rate at the back surface of the overpack was calculated using the 600 Watt Co-60 source.

It is concluded that all dose rates are within the prescribed limits for both the vertical and horizontal shipments under normal or accident conditions.

5.0 REFERENCES

5.1 NEDO-31581, "Model 2000 Radioactive Material Transport Package Safety Analysis Report," Revision 1, October 2000.
5.2 NEDO-32318, "Model 2000 Radioactive Material Transport Package 2000 Watts Decay Heat Upgrade Safety Analysis Report," Revision 1, August 2000.
5.3 GE Nuclear Energy Drawing No. 105E9520, "Model 2000 Shipping Cask – All S/N's Except S/N 2001," Revision 4, General Electric Company, VNC, Pleasanton, CA.
5.4 GE Nuclear Energy Drawing No. 105E9521, "Model 2000 Cask Overpack – All S/N's Except S/N 2001," Revision 5, General Electric Company, VNC, Pleasanton, CA.
5.5 GE Nuclear Energy Drawing No. 129D4922, "Model 2000 Cask Liner Certification Drawing," Revision 2, General Electric Company, VNC, Pleasanton, CA.
5.6 GE Nuclear Energy Drawing No. 166D8066, "Barrel Rack Certification Drawing," Revision 2, General Electric Company, VNC, Pleasanton, CA.
5.7 GE Nuclear Energy Drawing No. 183C8356, "Material Basket Certification Drawing," Revision 2, General Electric Company, VNC, Pleasanton, CA.
5.8 Not used
5.9 ANSI/ANS-6.1.1-1977, "Neutron and Gamma-Ray Flux-to-Dose-Rate Factors."

"Designated Original"

CIS-US, Inc.

May 6, 2005

U.S. Nuclear Regulatory Commission
Package Certification Section
Spent Fuel Project Office
Office of Nuclear Material Safety and Safeguards
Washington, DC 20555

Sub: Registration pursuant to 10 CFR 71.17[c](3); use of NRC approved radioactive materials package

Dear Sir/Madam:

CIS-US, Inc. registers as a user of Type B(U) Package Identification No. USA/9168/B(U); i.e., Chem-Nuclear Systems 8-120B radioactive materials shipping cask., NRC Certificate of Compliance No. 9168.

Our materials license for this use is 20-9734 (Massachusetts DPH/RCP). The NRC Quality Assurance Program Approval is No. 0642, Revision 8.

Thank you for your timely confirmation of this registration (our first use scheduled 16-MAY-05). Please forward any future information regarding this package to my attention.

Sincerely,

Paul M. Tyree
Radiation Safety Officer
CIS-US, Inc.
10 DeAngelo Drive
Bedford, MA 01730
Ph: 781.687.1258
ptyree@cisusinc.com

cc: Chem-Nuclear Systems
attn: Document Control
140 Stoneridge Drive
Columbia, SC 29210