NMC
Committed to Nuclear Excellence

Duane Arnold Energy Center
Operated by Nuclear Management Company, LLC

April 29, 2005

NG-05-0263
10 CFR 50.36a

Office of Nuclear Reactor Regulation
U.S. Nuclear Regulatory Commission
ATTN: Document Control Desk
Washington, DC 20555-0001

Duane Arnold Energy Center
Docket 50-331
License No. DPR-49

2004 Annual Radioactive Material Release Report

Please find enclosed a copy of the 2004 Annual Radioactive Material Release Report for the Duane Arnold Energy Center (DAEC). This report satisfies the requirements for the Annual Radioactive Material Release Report, as stated in the Offsite Dose Assessment Manual (ODAM) section 8.2.1 and Technical Specifications Section 5.6.3.

This letter contains no new commitments and no revisions to existing commitments.

Mark A. Peifer
Site Vice President, Duane Arnold Energy Center
Nuclear Management Company, LLC

Enclosures (1)

cc: Administrator, Region III, USNRC
Project Manager, Duane Arnold Energy Center, USNRC
Resident Inspector, Duane Arnold Energy Center, USNRC
P. Fox (ANI)
D. Flater (IA Dept. of Public Health)
W. Nestel (INPO)
IRMS

IE48

3277 DAEC Road • Palo, Iowa 52324-9785
Telephone: 319.851.7611

ENCLOSURE 1

DUANE ARNOLD ENERGY CENTER
2004 ANNUAL RADIOACTIVE MATERIAL RELEASE REPORT

306 pages follow

NMC
Committed to Nuclear Excellence

Duane Arnold Energy Center

Cedar Rapids, Iowa

Docket No. 50-331

2004

Annual Radioactive Material Release Report

January 1, 2004 through December 31, 2004

Table of Contents

INTRODUCTION 3

EFFLUENT CONTROLS PROGRAM DESCRIPTION 4

LIQUID EFFLUENT TABLE 5
- LIQUID EFFLUENTS BY CALENDAR QUARTER

GASEOUS EFFLUENT TABLES 6
- GASEOUS EFFLUENTS BY CALENDAR QUARTER (CURIES)
- GASEOUS EFFLUENTS BY RELEASE POINT (CURIES)
- GASEOUS EFFLUENT: HISTORICAL TREND

ABNORMAL RELEASE 9

SUMMARY OF RADIOACTIVE SOLID WASTE 10
- SHIPMENTS MADE TO BURIAL FACILITIES IN 2004
- SHIPMENTS MADE TO PROCESSING FACILITIES
- SUMMARY OF RADIOACTIVE SOLID WASTE BY WASTE STREAM

SUMMARY OF RADIOLOGICAL IMPACT ON MAN 16
- DOSE CONTRIBUTION FROM DIRECT RADIATION
- ESTIMATED OFFSITE DOSE FROM EFFLUENT RELEASES
- CONCLUSION

SUMMARY OF METEOROLOGICAL DATA 18
- STABILITY CLASS DATA 33'
- WIND ROSE DATA 33'
- STABILITY CLASS DATA 156'
- WIND ROSE DATA 156'

ATTACHMENT 1: SUMMARY OF THE DAEC CHEMISTRY LAB CROSS CHECK PROGRAM 23

ATTACHMENT 2: ODAM CHANGES IN 2004 27

ATTACHMENT 3: CURRENT REVISION OF THE ODAM 28

TABLES

Table 1 Liquid Effluents 5
Table 2 Gaseous Effluents 6
Table 3 Gaseous Effluent by Release Point 7
Table 4 Waste Disposition 10
Table 5 Dry Active Waste 12
Table 6 Aqueous Mechanical Filters 13
Table 7 Spent Resin 14
Table 8 Radwaste Annual Summary 15
Table 9 Summary of Plant Effect on Man 17
Table 10 Met. Data Recovery 18

INTRODUCTION

The 2004 Annual Radioactive Effluent Release Report summarizes gaseous effluent releases from the Duane Arnold Energy Center for the period of January 1, 2004 , through December 31, 2004 . The report contains information required by Technical Specification 5.6.3.

There were no radioactive gaseous batch releases from the Duane Arnold Energy Center during this report period.

Gaseous effluent releases were continuous for the period and resulted in a small fraction of the 10 CFR 20 site boundary concentration limits and the 10 CFR 50, Appendix I dose objectives. Tables quantifying gaseous releases are displayed on pages 6-7.

There were no planned releases of liquid radwaste and no nuclides attributable to the operation of the DAEC were identified by the Effluent Controls Program. However, in the course of the performance of the Radiological Environmental Monitoring Program, trace amounts of tritium were identified in outfall from the site sewage treatment plant. The Abnormal Liquid Release of tritium was quantified and the resulting offsite dose calculated. A discussion of the release is included on page 9.

A total of 11 solid radioactive waste shipments were made during 2004 . Details are listed beginning on page 10.

Radiation doses to the public were a small fraction of applicable limits. A summary of plant effect begins on page 16.

Meteorological Stability Class data is listed starting on page 18.

The DAEC participates in a Radioactive Sample Analysis Cross Check Program with Analytics Inc. A Summary of the program is included as Attachment 1 starting on page 23.

There were two revisions to the Offsite Dose Assessment Manual (ODAM) in 2004 Details of these changes are described in Attachment 2 starting on page 27.

A complete copy of the ODAM is included as Attachment 3.

EFFLUENT CONTROLS PROGRAM DESCRIPTION

This program, conforming to 10 CFR 50.36a, provides for the control of radioactive effluents and for maintaining the doses to members of the public from radioactive effluents as low as reasonably achievable. The program is contained in the ODAM, is implemented by procedures, and includes remedial actions to be taken whenever the program limits are exceeded. The program includes the following elements.

a. Limitations on the functional capacity of radioactive liquid and gaseous monitoring instrumentation including surveillance tests and setpoint determination in accordance with the methodology in the ODAM;

b. Limitations on the concentrations of radioactive material released in liquid effluents from the site to unrestricted areas, conforming to ten times (10x) the concentrations listed in Appendix B, Table 2, Column 2 to 10 CFR 20.1001 - 20.2402;

c. Monitoring, sampling, and analysis of radioactive liquid and gaseous effluents pursuant to 10 CFR 20.1302 and with the methodology and parameters in the ODAM conforming to 10CFR50, Appendix I;

d. Limitations on the annual and quarterly doses or dose commitment to a member of the public from radioactive material in liquid effluents released to unrestricted areas;

e. Determination of cumulative and projected dose contributions from radioactive effluents for the current calendar quarter and current calendar year in accordance with the methodology and parameters in the ODAM at least every 31 days;

f. Limitations on the functional capability and use of the liquid and gaseous effluent treatment systems to ensure that the appropriate portions of these systems which were used to establish compliance with the design objectives in 10 CFR 50, Appendix I, Section II be used when specified to provide reasonable assurance that releases of radioactive material in liquid and gaseous effluents be kept as low as reasonably achievable;

g. Limitations on the dose rate resulting from radioactive material released in gaseous effluents to areas beyond the site boundary shall be limited to the following:

   1. For noble gases: less than or equal to a dose rate of 500 mrem/yr to the whole body and less than or equal to a dose rate of 3000 mrem/yr to the skin, and

   2. For iodine-131, iodine-133, tritium, and for all radionuclides in particulate form with half lives > 8 days; less than or equal to a dose rate of 1500 mrem/yr to any organ;

h. Limitations on the annual and quarterly air doses resulting from noble gases released in gaseous effluents to areas beyond the site boundary, conforming to 10 CFR 50, Appendix I;

i. Limitations on the annual and quarterly doses to a member of the public from iodine-131, iodine-133, tritium, and all radionuclides in particulate form with half lives > 8 days in gaseous effluents released to areas beyond the site boundary, conforming to 10 CFR 50, Appendix I; and

j. Limitations on the annual dose or dose commitment to any member of the public due to releases of radioactivity and to radiation from uranium fuel cycle sources, conforming to 40 CFR 190.

LIQUID EFFLUENT TABLE

Trace quantities of tritium were identified in the outfall of the sewage treatment plant. The release has been qualified as an abnormal release and is described on page 7. There were no other radioactive liquid releases in 2004.

Table 1 Liquid Effluents

ANNUAL RADIOACTIVE MATERIAL RELEASE REPORT (2004) LIQUID EFFLUENTS BY CALENDAR QUARTER					
Nuclides Released	Unit	1st Quarter	2nd Quarter	3rd Quarter	4th Quarter
strontium-89	Ci	<LLD	<LLD	<LLD	<LLD
strontium-90	Ci	<LLD	<LLD	<LLD	<LLD
cesium-134	Ci	<LLD	<LLD	<LLD	<LLD
cesium-137	Ci	<LLD	<LLD	<LLD	<LLD
iodine-131	Ci	<LLD	<LLD	<LLD	<LLD
cobalt-58	Ci	<LLD	<LLD	<LLD	<LLD
cobalt-60	Ci	<LLD	<LLD	<LLD	<LLD
iron-55	Ci	<LLD	<LLD	<LLD	<LLD
iron-59	Ci	<LLD	<LLD	<LLD	<LLD
zinc-65	Ci	<LLD	<LLD	<LLD	<LLD
manganese-54	Ci	<LLD	<LLD	<LLD	<LLD
chromium-51	Ci	<LLD	<LLD	<LLD	<LLD
zirconium-niobium-95	Ci	<LLD	<LLD	<LLD	<LLD
molybdenum-99	Ci	<LLD	<LLD	<LLD	<LLD
technetium-99m	Ci	<LLD	<LLD	<LLD	<LLD
barium-lanthanum-140	Ci	<LLD	<LLD	<LLD	<LLD
cerium-141	Ci	<LLD	<LLD	<LLD	<LLD
Tritium	Ci	<LLD	1.04E-03	2.04E-03	6.87E-04
Other	Ci	<LLD	<LLD	<LLD	<LLD
Total for period (above)	Ci	<LLD	<LLD	<LLD	<LLD
xenon-133	Ci	<LLD	<LLD	<LLD	<LLD
xenon-135	Ci	<LLD	<LLD	<LLD	<LLD

<LLD means that the radionuclide was not identified in any samples and all analyses were performed with instrumentation meeting the lower limit of detection as required by the DAEC Offsite Dose Assessment Manual

GASEOUS EFFLUENT TABLES

Table 2 Gaseous Effluents

ANNUAL RADIOACTIVE MATERIAL RELEASE REPORT (2004) GASEOUS EFFLUENTS BY CALENDAR QUARTER (Curies)					
Nuclides Released	Unit	1st Quarter	2nd Quarter	3rd Quarter	4th Quarter
1. Fission gases					
tritium	Ci	1.06E+1	1.98E+1	2.66E+1	6.73E+1
argon-41	Ci	<LLD	<LLD	<LLD	<LLD
krypton-85	Ci	2.54E+0	5.56E+0	1.69E+0	1.42E+0
krypton-85m	Ci	<LLD	<LLD	<LLD	<LLD
krypton-87	Ci	<LLD	<LLD	<LLD	<LLD
krypton-88	Ci	<LLD	<LLD	<LLD	<LLD
xenon-133	Ci	<LLD	<LLD	<LLD	<LLD
xenon-135	Ci	2.55E+0	8.33E+0	6.33E-1	1.28E+0
xenon-135m	Ci	3.55E+0	7.07E-2	3.81E+0	<LLD
xenon-138	Ci	4.47E-2	<LLD	<LLD	2.37E+0
Total Fission Gasses for period	Ci	1.93E+1	3.38E+1	3.28E+1	7.24E+1
2. Iodines					
iodine-131	Ci	4.39E-6	9.12E-6	4.25E-6	6.45E-6
iodine-132	Ci	<LLD	<LLD	1.05E-6	<LLD
iodine-133	Ci	3.53E-6	4.79E-6	8.32E-6	4.95E-6
iodine-135	Ci	<LLD	<LLD	<LLD	<LLD
Total Iodines for period	Ci	7.92E-6	1.39E-5	1.36E-5	1.14E-5
3. Particulates					
strontium-89	Ci	3.09E-6	1.49E-6	2.01E-6	5.37E-6
strontium-90	Ci	2.70E-7	3.44E-7	2.21E-7	<LLD
cesium-134	Ci	<LLD	<LLD	<LLD	<LLD
cesium-137	Ci	<LLD	<LLD	<LLD	<LLD
barium-lanthanum-140	Ci	<LLD	<LLD	<LLD	<LLD
chromium-51	Ci	<LLD	<LLD	<LLD	<LLD
cobalt-58	Ci	<LLD	<LLD	<LLD	<LLD
cobalt-60	Ci	2.24E-6	<LLD	<LLD	3.66E-6
iron59	Ci	<LLD	<LLD	<LLD	<LLD
manganese-54	Ci	<LLD	<LLD	<LLD	<LLD
zinc-65	Ci	<LLD	<LLD	<LLD	<LLD
Total Particulates for Period	Ci	5.60E-6	1.83E-6	2.23E-6	9.03E-6
Total for Period	Ci	1.93E+1	3.38E+1	3.28E+1	7.24E+1

<LLD means that the radionuclide was not identified in any samples and all analyses were performed with instrumentation meeting the lower limit of detection as required by the DAEC Offsite Dose Assessment Manual.

Table 3 Gaseous Effluent by Release Point

ANNUAL RADIOACTIVE MATERIAL RELEASE REPORT (2004) GASEOUS EFFLUENTS BY RELEASE POINT (Curies)				
RELEASE POINT	OFFGAS STACK	REACTOR BUILDING	TURBINE BUILDING	LLRPSF
RELEASE HEIGHT	328 FEET	156 FEET	90 FEET	65 FEET
RELEASE MODE	ELEVATED	WAKE SPLIT	WAKE SPLIT	WAKE SPLIT
Ar-41	<LLD	<LLD	<LLD	<LLD
Kr-85m	1.12E+1	<LLD	<LLD	<LLD
Kr-85	<LLD	<LLD	<LLD	<LLD
Kr-87	<LLD	<LLD	<LLD	<LLD
Kr-88	<LLD	<LLD	<LLD	<LLD
Xe-133	<LLD	<LLD	<LLD	<LLD
Xe-135m	7.43E+0	<LLD	<LLD	<LLD
Xe-135	1.28E+1	<LLD	<LLD	<LLD
Xe-138	2.41E+0	<LLD	<LLD	<LLD
H-3	1.52E+1	5.90E+1	4.97E+1	3.53E-1
Cr-51	<LLD	<LLD	<LLD	<LLD
Mn-54	<LLD	<LLD	<LLD	<LLD
Co-58	<LLD	<LLD	<LLD	<LLD
Co-60	<LLD	5.90E-6	<LLD	<LLD
Fe-59	<LLD	<LLD	<LLD	<LLD
Sr-89	1.73E-6	7.96E-6	2.27E-6	<LLD
Sr-90	5.84E-8	7.59E-7	<LLD	1.72E-8
Cs-134	<LLD	<LLD	<LLD	<LLD
Cs-137	<LLD	<LLD	<LLD	<LLD
Ba-140	<LLD	<LLD	<LLD	<LLD
Zn-65	<LLD	<LLD	<LLD	<LLD
I-131	2.42E-5	<LLD	<LLD	<LLD
I-132	1.05E-6	<LLD	<LLD	<LLD
I-133	2.16E-5	<LLD	<LLD	<LLD
I-135	<LLD	<LLD	<LLD	<LLD
Totals	4.90E+1	5.90E+1	4.97E+1	3.53E-1

<LLD means that the radionuclide was not identified in any samples and all analyses were performed with instrumentation meeting the lower limit of detection as required by the DAEC Offsite Dose Assessment Manual.

GASEOUS EFFLUENT: Historical Trend

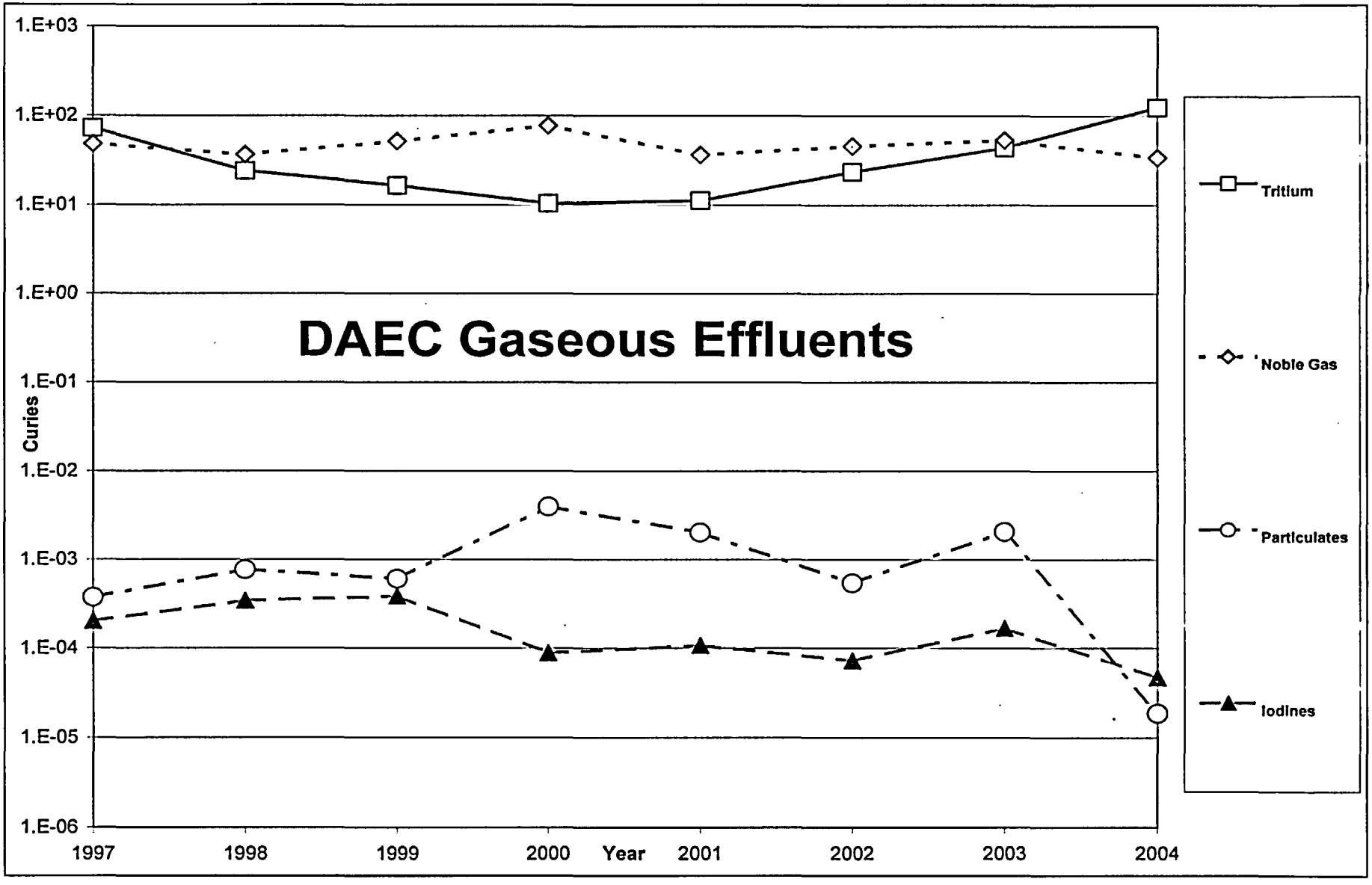

ABNORMAL RELEASE

Trace levels of Tritium were identified in liquid samples taken from the Sewage Treatment plant in 2004. The tritium was identified as a part of the Radiological Environmental Monitoring Program (REMP). Tritium was identified in three of four quarterly analysis.

The results of those analyses are :

Q1: < LLD
Q2: 255 pCi/L
Q3: 640 pCi/L
Q4: 292 pCi/L

These concentrations are far below the limiting EPA standard for drinking water of 20,000 pCi/L.

The source of the tritium has been attributed to recapture of Gaseous Effluent Tritium. Tritium in the form of tritiated water vapor is condensed by building air conditioning units and air compressors. The condensation from those condensers is routed to the sewage treatment facility.

Reactor Water Tritium (and consequently gaseous tritium) levels have been elevated over the past year due to failing control rod blades. Affected control rod blades were removed from the reactor during the spring 2005 refueling outage.

Because the site sewage treatment facility is continuously in operation, the release was considered a continuous release. The extremely low concentration of tritium combined with the relatively small flow volume of effluent resulted in negligible individual doses to members of the public. Results of the offsite dose calculation are located on page 16.

SUMMARY OF RADIOACTIVE SOLID WASTE

A total of eleven (11) solid radioactive waste shipments were made during 2004. Seven (7) of these shipments were of spent resin in poly liners and shipped for direct burial at Envirocare of Utah, located in Clive, Utah at their Containerized Waste Facility (CWF).

Four (4) shipments of Dry Active Waste (DAW) were shipped for processing and then to burial during the year 2004. The four shipments of DAW were shipped to a processor in Tennessee to be surveyed for release or compacted and shipped for burial at Envirocare of Utah.

No aqueous mechanical filters, irradiated hardware or components were shipped for processing or burial during this reporting period.

Listed below are tables summarizing the Duane Arnold Energy Center's generation of Radioactive Solid Waste for the period January 1, 2004 through December 31, 2004.

SHIPMENTS MADE TO BURIAL FACILITIES IN 2004:

Table 4 Waste Disposition

WASTE TYPE	NO. SHIPMENTS	VOLUME (Ft^3)	ACTIVITY (Ci)
Resin	7	1.31E+03	5.86E+02
Aqueous Mechanical Filters*	0	0.00E+00	0.00E+00
DAW	0	0.00E+00	0.00E+00
DESTINATION	Envirocare of Utah, Clive, Utah		

SHIPMENTS MADE TO PROCESSING FACILITIES:

WASTE TYPE	NO. SHIPMENTS	VOLUME (Ft^3)	ACTIVITY (Ci)
Dry Active Waste	4	4.25E+03	7.74E-01
DESTINATION	RACE, LLC Memphis, Tennessee		

(*) No mechanical filters, irradiated hardware component shipments were made during this reporting period.

TOTAL SOLID WASTE DISPOSITION:

WASTE	VOLUME (Ft^3)	ACTIVITY (Ci)
Shipped	5.56E+3	5.87E+2
Buried	1.45E+3	5.86E+2

SOLIDIFICATION AGENT: None

MODE OF TRANSPORTATION: Exclusive-Use Vehicle (Trucks).

WASTE CLASSIFICATION PER 10 CFR 61	NUMBER OF SHIPMENTS
A-Unstable	11
A-Stable	0
B	0
C	0

SUMMARY OF RADIOACTIVE SOLID WASTE BY WASTE STREAM

(January 1, 2004 - December 31, 2004)

MAJOR NUCLIDE COMPOSITION

Table 5 Dry Active Waste

Principle Nuclide	1st QTR (Curies)	2nd QTR (Curies)	3rd QTR (Curies)	4th QTR (Curies)	Total (Curies)	Percent Abundance
H-3	0.00E+00	1.31E-05	1.33E-06	1.01E-06	1.54E-05	0.00%
C-14	0.00E+00	1.13E-04	1.15E-05	8.76E-06	1.33E-04	0.02%
Cr-51	0.00E+00	0.00E+00	0.00E+00	0.00E+00	0.00E+00	0.00%
Mn-54	0.00E+00	1.81E-02	1.85E-03	1.42E-03	2.14E-02	2.76%
Fe-55	0.00E+00	5.49E-01	5.60E-02	4.28E-02	6.48E-01	83.68%
Fe-59	0.00E+00	0.00E+00	0.00E+00	0.00E+00	0.00E+00	0.00%
Co-58	0.00E+00	2.72E-03	2.78E-04	0.00E+00	3.00E-03	0.39%
Co-60	0.00E+00	7.15E-02	7.28E-03	5.55E-03	8.43E-02	10.89%
Ni-59	0.00E+00	1.25E-03	1.27E-04	9.71E-05	1.47E-03	0.19%
Ni-63	0.00E+00	5.81E-03	5.92E-04	4.51E-04	6.85E-03	0.89%
Zn-65	0.00E+00	6.14E-03	6.26E-04	4.81E-04	7.25E-03	0.94%
Sr-90	0.00E+00	1.02E-06	1.03E-07	7.88E-08	1.20E-06	0.00%
Cs-134	0.00E+00	0.00E+00	0.00E+00	0.00E+00	0.00E+00	0.00%
Cs-137	0.00E+00	9.01E-04	9.17E-05	6.98E-05	1.06E-03	0.14%
Hf-181	0.00E+00	0.00E+00	0.00E+00	0.00E+00	0.00E+00	0.00%
Tc-99	0.00E+00	4.69E-06	1.59E-23	2.29E-08	4.72E-06	MDA
Nb-95	0.00E+00	0.00E+00	0.00E+00	0.00E+00	0.00E+00	0.00%
I-129	0.00E+00	9.02E-06	5.83E-23	4.39E-08	9.06E-06	MDA
Pu-238	0.00E+00	8.49E-08	8.65E-09	5.16E-06	5.25E-06	0.00%
Pu-239/40	0.00E+00	1.39E-07	1.41E-08	8.46E-06	8.62E-06	0.00%
Pu-241	0.00E+00	1.21E-05	1.23E-06	7.40E-04	7.54E-04	0.10%
Am-241	0.00E+00	1.37E-07	1.40E-08	8.40E-06	8.55E-06	0.00%
Cm-242	0.00E+00	1.38E-07	1.40E-08	8.56E-06	8.71E-06	0.00%
Cm-243/44	0.00E+00	1.39E-07	1.41E-08	8.47E-06	8.63E-06	0.00%
U-233/34	0.00E+00	0.00E+00	0.00E+00	0.00E+00	0.00E+00	0.00%
U-238	0.00E+00	0.00E+00	0.00E+00	0.00E+00	0.00E+00	0.00%
Ru-106	0.00E+00	0.00E+00	0.00E+00	0.00E+00	0.00E+00	0.00%
Sr-89	0.00E+00	0.00E+00	0.00E+00	0.00E+00	0.00E+00	0.00%
Zr-95	0.00E+00	0.00E+00	0.00E+00	0.00E+00	0.00E+00	0.00%
Sb-124	0.00E+00	0.00E+00	0.00E+00	0.00E+00	0.00E+00	0.00%
Ce-141	0.00E+00	0.00E+00	0.00E+00	0.00E+00	0.00E+00	0.00%
Ce-144	0.00E+00	0.00E+00	0.00E+00	0.00E+00	0.00E+00	0.00%
Totals	0.00E+00	6.56E-01	6.69E-02	5.16E-02	7.74E-01	100.00%

No DAW Shipments were made during the first Quarter of 2004.

Tc-99 and I-129 represent Minimum Detectable Activity (MDA) values.

These two nuclides are calculated from uCi/cc on manifest by the material volume,

Note: H-3, C-14, Tc-99, and I-129 were required to be manifested per 10 CFR 20, Appendix G.

SUMMARY OF RADIOACTIVE SOLID WASTE

(January 1, 2004 - December 31, 2004)

MAJOR NUCLIDE COMPOSITION

Table 6 Aqueous Mechanical Filters

Principle Nuclide	1st QTR (Curies)	2nd QTR (Curies)	3rd QTR (Curies)	4th QTR (Curies)	Total (Curies)	Percent Abundance
H-3	0.00E+00	0.00E+00	0.00E+00	0.00E+00	0.00E+00	N/A
C-14	0.00E+00	0.00E+00	0.00E+00	0.00E+00	0.00E+00	N/A
Cr-51	0.00E+00	0.00E+00	0.00E+00	0.00E+00	0.00E+00	N/A
Mn-54	0.00E+00	0.00E+00	0.00E+00	0.00E+00	0.00E+00	N/A
Fe-55	0.00E+00	0.00E+00	0.00E+00	0.00E+00	0.00E+00	N/A
Fe-59	0.00E+00	0.00E+00	0.00E+00	0.00E+00	0.00E+00	N/A
Co-58	0.00E+00	0.00E+00	0.00E+00	0.00E+00	0.00E+00	N/A
Co-60	0.00E+00	0.00E+00	0.00E+00	0.00E+00	0.00E+00	N/A
Ni-59	0.00E+00	0.00E+00	0.00E+00	0.00E+00	0.00E+00	N/A
Ni-63	0.00E+00	0.00E+00	0.00E+00	0.00E+00	0.00E+00	N/A
Zn-65	0.00E+00	0.00E+00	0.00E+00	0.00E+00	0.00E+00	N/A
Sr-90	0.00E+00	0.00E+00	0.00E+00	0.00E+00	0.00E+00	N/A
Cs-134	0.00E+00	0.00E+00	0.00E+00	0.00E+00	0.00E+00	N/A
Cs-137	0.00E+00	0.00E+00	0.00E+00	0.00E+00	0.00E+00	N/A
Hf-181	0.00E+00	0.00E+00	0.00E+00	0.00E+00	0.00E+00	N/A
Tc-99	0.00E+00	0.00E+00	0.00E+00	0.00E+00	0.00E+00	N/A
Nb-95	0.00E+00	0.00E+00	0.00E+00	0.00E+00	0.00E+00	N/A
I-129	0.00E+00	0.00E+00	0.00E+00	0.00E+00	0.00E+00	N/A
Pu-238	0.00E+00	0.00E+00	0.00E+00	0.00E+00	0.00E+00	N/A
Pu-239/40	0.00E+00	0.00E+00	0.00E+00	0.00E+00	0.00E+00	N/A
Pu-241	0.00E+00	0.00E+00	0.00E+00	0.00E+00	0.00E+00	N/A
Am-241	0.00E+00	0.00E+00	0.00E+00	0.00E+00	0.00E+00	N/A
Cm-242	0.00E+00	0.00E+00	0.00E+00	0.00E+00	0.00E+00	N/A
Cm-243/44	0.00E+00	0.00E+00	0.00E+00	0.00E+00	0.00E+00	N/A
U-233/34	0.00E+00	0.00E+00	0.00E+00	0.00E+00	0.00E+00	N/A
U-238	0.00E+00	0.00E+00	0.00E+00	0.00E+00	0.00E+00	N/A
Cd-109	0.00E+00	0.00E+00	0.00E+00	0.00E+00	0.00E+00	N/A
Co-57	0.00E+00	0.00E+00	0.00E+00	0.00E+00	0.00E+00	N/A
Na-22	0.00E+00	0.00E+00	0.00E+00	0.00E+00	0.00E+00	N/A
Totals	0.00E+00	0.00E+00	0.00E+00	0.00E+00	0.00E+00	N/A

Notes:
No Aqueous Mechanical Filter Shipments were made during the Year 2004

SUMMARY OF RADIOACTIVE SOLID WASTE

(January 1, 2004 - December 31, 2004)

MAJOR NUCLIDE COMPOSITION

Table 7 Spent Resin

Principle Nuclide	1st QTR (Ci)	2nd QTR (Ci)	3rd QTR (Ci)	4th QTR (Ci)	Total (Ci)	Percent Abundance
H-3	1.69E-02	3.06E-02	6.92E-02	0.00E+00	1.17E-01	0.02%
C-14	2.55E-01	6.54E-01	3.29E-01	0.00E+00	1.24E+00	0.21%
Cr-51	1.33E-01	6.68E-03	0.00E+00	0.00E+00	1.40E-01	0.02%
Mn-54	3.42E+00	9.20E+00	1.40E+00	0.00E+00	1.40E+01	2.39%
Fe-55	2.26E+01	4.13E+02	2.92E+01	0.00E+00	4.65E+02	79.25%
Fe-59	1.89E-01	1.58E-02	0.00E+00	0.00E+00	2.04E-01	0.03%
Co-57	1.71E-03	1.28E-04	0.00E+00	0.00E+00	1.84E-03	0.00%
Co-58	4.79E-01	1.06E-01	0.00E+00	0.00E+00	5.85E-01	0.10%
Co-60	7.71E+00	6.78E+01	9.97E+00	0.00E+00	8.55E+01	14.57%
Ni-59	1.64E-02	5.83E-02	2.12E-02	0.00E+00	9.59E-02	0.02%
Ni-63	3.61E-01	4.38E+00	4.68E-01	0.00E+00	5.21E+00	0.89%
Zn-65	3.46E+00	7.06E+00	2.19E+00	0.00E+00	1.27E+01	2.17%
Sr-90	1.06E-03	4.48E-03	2.76E-03	0.00E+00	8.30E-03	0.00%
Cs-134	0.00E+00	0.00E+00	0.00E+00	0.00E+00	0.00E+00	0.00%
Cs-137	3.43E-01	5.31E-01	8.94E-01	0.00E+00	1.77E+00	0.30%
Hf-181	0.00E+00	1.08E-02	0.00E+00	0.00E+00	1.08E-02	0.00%
Tc-99	4.36E-03	2.56E-03	4.54E-03	0.00E+00	1.15E-02	MDA
Nb-95	5.52E-02	9.99E-04	0.00E+00	0.00E+00	5.62E-02	0.01%
I-129	2.79E-03	1.67E-03	2.91E-03	0.00E+00	7.37E-03	MDA
Pu-238	0.00E+00	0.00E+00	0.00E+00	0.00E+00	0.00E+00	0.00%
Pu-239/40	5.40E-05	3.06E-04	2.17E-05	0.00E+00	3.82E-04	0.00%
Pu-241	3.54E-03	1.93E-02	1.43E-03	0.00E+00	2.43E-02	0.00%
Am-241	6.32E-05	3.60E-04	2.55E-05	0.00E+00	4.48E-04	0.00%
Cm-242	3.16E-05	1.73E-04	1.27E-05	0.00E+00	2.17E-04	0.00%
Cm-243/44	1.23E-05	8.05E-05	4.94E-06	0.00E+00	9.78E-05	0.00%
U-233/34	0.00E+00	0.00E+00	0.00E+00	0.00E+00	0.00E+00	0.00%
U-238	0.00E+00	0.00E+00	0.00E+00	0.00E+00	0.00E+00	0.00%
Ru-106	0.00E+00	0.00E+00	0.00E+00	0.00E+00	0.00E+00	0.00%
Sr-89	0.00E+00	2.16E-03	0.00E+00	0.00E+00	2.16E-03	0.00%
Zr-95	0.00E+00	5.59E-04	0.00E+00	0.00E+00	5.59E-04	0.00%
Sb-124	0.00E+00	4.84E-04	0.00E+00	0.00E+00	4.84E-04	0.00%
Ce-141	0.00E+00	2.20E-04	0.00E+00	0.00E+00	2.20E-04	0.00%
Ce-144	6.20E-03	4.78E-05	0.00E+00	0.00E+00	6.25E-03	0.00%
Totals	3.90E+01	5.03E+02	4.46E+01	0.00E+00	5.86E+02	100.00%

No Spent Resin Shipments were made during the 4th Quarter of 2004

Tc-99 and I-129 represent Minimum Detectable Activity (MDA) values.
These two nuclides are calculated from uCi/cc on manifest by the material volume

Note: H-3, C-14, Tc-99, and I-129 were required to be manifested per 10 CFR 20, Appendix G.

SUMMARY OF RADIOACTIVE SOLID WASTE

(January 1, 2004 - December 31, 2004)

MAJOR NUCLIDE COMPOSITION

Table 8 Radwaste Annual Summary

Principle Nuclide	Resin Totals (Ci)	DAW Totals (Ci)	Mech Filter Totals (Ci)	Totals for 2004 (Ci)	Percent Abundance
H-3	1.17E-01	1.54E-05	0.00E+00	1.17E-01	0.02%
C-14	1.24E+00	1.33E-04	0.00E+00	1.24E+00	0.21%
Cr-51	1.40E-01	0.00E+00	0.00E+00	1.40E-01	0.02%
Mn-54	1.40E+01	2.14E-02	0.00E+00	1.40E+01	2.39%
Fe-55	4.65E+02	6.48E-01	0.00E+00	4.65E+02	79.26%
Fe-59	2.04E-01	0.00E+00	0.00E+00	2.04E-01	0.03%
Co-58	5.85E-01	3.00E-03	0.00E+00	5.88E-01	0.10%
Co-60	8.55E+01	8.43E-02	0.00E+00	8.55E+01	14.57%
Ni-59	9.59E-02	1.47E-03	0.00E+00	9.74E-02	0.02%
Ni-63	5.21E+00	6.85E-03	0.00E+00	5.21E+00	0.89%
Zn-65	1.27E+01	7.25E-03	0.00E+00	1.27E+01	2.17%
Sr-90	8.30E-03	1.20E-06	0.00E+00	8.30E-03	0.00%
Cs-134	0.00E+00	0.00E+00	0.00E+00	0.00E+00	0.00%
Cs-137	1.77E+00	1.06E-03	0.00E+00	1.77E+00	0.30%
Hf-181	1.08E-02	0.00E+00	0.00E+00	1.08E-02	0.00%
Tc-99	1.15E-02	4.72E-06	0.00E+00	1.15E-02	MDA
Nb-95	5.62E-02	0.00E+00	0.00E+00	5.62E-02	0.01%
I-129	7.37E-03	9.06E-06	0.00E+00	7.38E-03	MDA
Pu-238	0.00E+00	5.25E-06	0.00E+00	5.25E-06	0.00%
Pu-239/40	3.82E-04	8.62E-06	0.00E+00	3.90E-04	0.00%
Pu-241	2.43E-02	7.54E-04	0.00E+00	2.51E-02	0.00%
Am-241	4.48E-04	8.55E-06	0.00E+00	4.57E-04	0.00%
Cm-242	2.17E-04	8.71E-06	0.00E+00	2.26E-04	0.00%
Cm-243/44	9.78E-05	8.63E-06	0.00E+00	1.06E-04	0.00%
U-233/34	0.00E+00	0.00E+00	0.00E+00	0.00E+00	0.00%
U-238	0.00E+00	0.00E+00	0.00E+00	0.00E+00	0.00%
Ru-106	0.00E+00	0.00E+00	0.00E+00	0.00E+00	0.00%
Sr-89	2.16E-03	0.00E+00	0.00E+00	2.16E-03	0.00%
Zr-95	5.59E-04	0.00E+00	0.00E+00	5.59E-04	0.00%
Sb-124	4.84E-04	0.00E+00	0.00E+00	4.84E-04	0.00%
Ce-141	2.20E-04	0.00E+00	0.00E+00	2.20E-04	0.00%
Ce-144	6.25E-03	0.00E+00	0.00E+00	6.25E-03	0.00%
Totals	5.86E+02	7.74E-01	0.00E+00	5.87E+02	100.00%

Tc-99 and I-129 represent Minimum Detectable Activity (MDA) values.
These two nuclides are calculated from the produce of the uCi/cc on manifests and the material's volume.

Note: H-3, C-14, Tc-99, and I-129 were required to be manifested per 10 CFR 20, Appendix G.

SUMMARY OF RADIOLOGICAL IMPACT ON MAN

The annual offsite radiation dose to a member of the public was determined by assessment of environmental dosimeter results and by calculations based on monitored effluent releases.

Dose Contribution from Direct Radiation

Direct radiation dose from the operation of the DAEC was reported by TLDs placed at locations in the surrounding environment as described in the Offsite Dose Assessment Manual (ODAM) and the Environmental Sampling Procedures (ESPs).

Pre-operational and 2004 TLD results were compared using a paired difference test. No significant differences in the TLD populations were observed for the 0.5 mile and one mile TLD populations using a confidence level of 99%.

Estimated Offsite Dose from Effluent Releases

The contribution of dose to a member of the public most likely to be exposed from effluent releases was calculated by the Meteorological Information and Dose Assessment System (MIDAS) computer program in accordance with ODAM. The calculation methods follow those prescribed by Reg. Guide 1.109. Because there were no nuclides detected in the environment at or beyond the site boundary that were due to the operation of the DAEC, no comparison of calculated dose from stack releases and dose calculated from environmental contamination was performed.

Results of the MIDAS dose calculations are discussed below and are shown in tabular form on page 17:

1.) The maximally exposed organ due to liquid effluents was the liver of a child, with an estimated dose equivalent of 7E-08 mrem.

2.) The whole body dose equivalent to the maximally exposed individual due to liquid effluents was 7E-08 mrem.

3.) The maximum dose to air at the site boundary from noble gases released was 5E-04 mrad from gamma radiation at 481 meters SSE.

4.) The maximum dose to air at the site boundary from noble gases released was 2E-01 mrad beta radiation at 535 meters SSW.

5.) The whole body dose equivalent to the maximally exposed individual from noble gases was 2E-03 mrem, at 805 meters West.

6.) The skin dose equivalent to the maximally exposed individual from noble gases was 2E-03 mrem, at 805 meters West.

7.) The maximally exposed organ due to airborne iodines and particulates with half-lives greater than eight days was the skin of a child at 805 meters W, with an estimated dose equivalent of 2E-02 mrem.

Conclusion:

No measurable dose due to the operation of the DAEC was detected by environmental TLDs in 2004 . The calculated doses are below the regulatory limits stated in Appendix I to 10 CFR 50 and in 40 CFR 190.

Estimated Maximum Offsite Individual Doses for 2004

Type	Age Group	Distance (meters)	Direction	Dose or Dose Equivalent (mrem)	Annual 10 CFR 50, Appendix I Limit
Direct Radiation (as measured by TLDs)				None	*
Liquid Releases					
Whole Body Dose	Child		S	7E-08 mrem	3 mrem
Organ Dose	Liver – Child		S	7E-08 mrem	10 mrem
Noble Gas					
Gamma Air Dose		481	SSE	5E-04 mrad	10 mrad
Beta Air Dose		535	SSW	2E-01 mrad	20 mrad
Whole Body	All	805	W	2E-03 mrem	5 mrem
Skin	All	805	W	2E-03 mrad	15 mrem
Particulates & Iodines					
Organ Dose	Child - Thyroid	805	W	2E-02 mrem	15 mrem

Table 9 Summary of Plant Effect on Man

* No Appendix I limit but is used to determine compliance with 40 CFR 190 limits of 25 mrem whole body and 75 mrem thyroid.

SUMMARY OF METEOROLOGICAL DATA

The following pages are a summation of meteorological data accumulated during the calendar year 2004 by the MIDAS (Meteorological Information and Dose Assessment System) at the Duane Arnold Energy Center.

Better than 92% data recovery was obtained for wind speed, temperature, delta temperature and wind direction. A table summarizing data collection is printed below.

Table 10 Met. Data Recovery

Sensor	% Recovery "good" data
Wind Direction 10m	97%
Wind Direction 50m	96%
Wind Speed 10m	96%
Wind Speed 50m	98%
Temperature 10m	96%
Temperature 50m	96%
Delta Temp./Stability	93%

Listed below are Stability Class tables which include wind speed, wind direction, and stability class at the specified sensor heights (33 feet or 156 feet). A summary table of all stability classes at each height is also included.

Stability Class Data 33'

SPEED SENSOR HEIGHT = 33 FEET
STABILITY BASED ON DELTA-T

SITE: DUANE ARNOLD 04/07/05 15:07

HOURS AT EACH WIND SPEED AND DIRECTION
PERIOD OF RECORD = 04010101-04123124
STABILITY CLASS: A DT/DZ
ELEVATION: SPEED:WS33 DIRECTION:WD33 LAPSE:DEL T

WIND DIRECTION	WIND SPEED(MPH) 1-3	4-7	8-12	13-18	19-24	>24	TOTAL
N	5	13	12	2	0	1	33
NNE	1	8	24	4	0	0	37
NE	2	19	10	3	0	0	34
ENE	2	16	10	0	0	0	28
E	7	14	1	0	0	0	22
ESE	4	19	5	0	0	0	28
SE	1	36	22	0	0	0	59
SSE	10	70	52	1	0	0	133
S	11	70	53	9	0	0	143
SSW	2	31	30	8	3	0	74
SW	2	16	30	3	1	1	53
WSW	3	8	14	4	0	0	29
W	1	19	17	1	1	0	39
WNW	3	10	18	3	8	3	45
NW	3	25	24	12	7	1	72
NNW	2	4	27	16	1	0	51
TOTAL	59	378	349	66	21	6	880

PERIODS OF CALM(HOURS): 89
VARIABLE DIRECTION 0
HOURS OF MISSING DATA: 650

SITE: DUANE ARNOLD 04/07/05 15:07

HOURS AT EACH WIND SPEED AND DIRECTION
PERIOD OF RECORD = 04010101-04123124
STABILITY CLASS: B DT/DZ
ELEVATION: SPEED:WS33 DIRECTION:WD33 LAPSE:DEL T

WIND DIRECTION	WIND SPEED(MPH) 1-3	4-7	8-12	13-18	19-24	>24	TOTAL
N	0	6	1	0	0	0	7
NNE	1	3	2	1	0	0	7
NE	0	7	2	1	0	0	10
ENE	0	2	1	0	0	0	3
E	3	10	1	0	0	0	14
ESE	2	6	4	0	0	0	12
SE	1	4	2	0	0	0	7
SSE	3	9	3	0	0	0	15
S	0	8	10	1	0	0	19
SSW	1	10	3	2	1	0	17
SW	0	3	3	0	0	0	6
WSW	0	2	1	0	0	0	3
W	1	3	5	3	0	0	12
WNW	2	1	5	2	1	0	11
NW	0	6	8	9	4	1	28
NNW	0	2	11	10	2	0	25
TOTAL	14	82	62	29	8	1	196

PERIODS OF CALM(HOURS): 89
VARIABLE DIRECTION 0
HOURS OF MISSING DATA: 650

SITE: DUANE ARNOLD 04/07/05 15:07

HOURS AT EACH WIND SPEED AND DIRECTION
PERIOD OF RECORD = 04010101-04123124
STABILITY CLASS: C DT/DZ
ELEVATION: SPEED:WS33 DIRECTION:WD33 LAPSE:DEL T

WIND DIRECTION	WIND SPEED(MPH) 1-3	4-7	8-12	13-18	19-24	>24	TOTAL
N	0	4	2	1	1	0	8
NNE	0	1	9	0	0	0	10
NE	1	10	6	0	0	0	17
ENE	0	5	2	1	0	0	8
E	3	11	2	0	0	0	16
ESE	2	4	2	0	0	0	8
SE	0	11	2	0	0	0	13
SSE	1	10	4	2	0	0	17
S	3	14	9	2	0	0	28
SSW	2	5	8	2	1	0	18
SW	2	5	3	4	0	0	14
WSW	0	6	4	2	0	0	12
W	1	5	4	2	0	0	12
WNW	0	5	8	4	2	1	20
NW	0	0	16	6	2	1	25
NNW	0	5	6	4	0	1	16
TOTAL	15	101	87	30	6	3	242

PERIODS OF CALM(HOURS): 89
VARIABLE DIRECTION 0
HOURS OF MISSING DATA: 650

SITE: DUANE ARNOLD 04/07/05 15:07

HOURS AT EACH WIND SPEED AND DIRECTION
PERIOD OF RECORD = 04010101-04123124
STABILITY CLASS: D DT/DZ
ELEVATION: SPEED:WS33 DIRECTION:WD33 LAPSE:DEL T

WIND DIRECTION	WIND SPEED(MPH) 1-3	4-7	8-12	13-18	19-24	>24	TOTAL
N	13	20	36	17	6	0	92
NNE	10	32	35	11	0	0	88
NE	14	39	61	11	0	0	125
ENE	19	59	36	2	0	0	116
E	26	124	50	4	0	0	204
ESE	13	87	46	2	0	0	148
SE	13	72	48	0	0	1	134
SSE	22	88	52	3	0	0	165
S	22	99	93	16	2	0	232
SSW	21	59	48	8	5	0	141
SW	10	42	25	6	0	0	84
WSW	16	33	15	11	2	0	78
W	12	39	48	12	11	2	124
WNW	7	35	50	46	13	0	151
NW	7	53	123	68	28	5	284
NNW	5	34	207	104	15	0	365
TOTAL	230	915	973	321	82	8	2531

PERIODS OF CALM(HOURS): 89
VARIABLE DIRECTION 0
HOURS OF MISSING DATA: 650

SITE: DUANE ARNOLD 04/07/05 15:07

HOURS AT EACH WIND SPEED AND DIRECTION
PERIOD OF RECORD = 04010101-04123124
STABILITY CLASS: E DT/DZ
ELEVATION: SPEED:WS33 DIRECTION:WD33 LAPSE:DEL T

WIND DIRECTION	WIND SPEED(MPH) 1-3	4-7	8-12	13-18	19-24	>24	TOTAL
N	17	36	25	14	1	0	94
NNE	25	47	31	9	1	0	113
NE	43	100	44	9	0	0	196
ENE	35	63	14	3	0	0	117
E	47	73	8	0	0	0	129
ESE	33	87	28	0	0	0	149
SE	23	116	47	2	0	0	190
SSE	58	163	63	4	0	0	288
S	64	219	99	11	1	0	395
SSW	54	89	57	9	4	0	214
SW	36	35	21	8	0	0	103
WSW	27	32	35	5	0	0	102
W	25	26	31	21	2	1	107
WNW	15	41	54	28	4	2	145
NW	10	104	70	29	8	3	225
NNW	7	46	143	45	6	0	247
TOTAL	519	1277	770	197	27	6	2814

PERIODS OF CALM(HOURS): 89
VARIABLE DIRECTION 0
HOURS OF MISSING DATA: 650

SITE: DUANE ARNOLD 04/07/05 15:07

HOURS AT EACH WIND SPEED AND DIRECTION
PERIOD OF RECORD = 04010101-04123124
STABILITY CLASS: F DT/DZ
ELEVATION: SPEED:WS33 DIRECTION:WD33 LAPSE:DEL T

WIND DIRECTION	WIND SPEED(MPH) 1-3	4-7	8-12	13-18	19-24	>24	TOTAL
N	6	1	5	0	0	1	13
NNE	18	16	3	2	0	0	39
NE	40	51	9	3	0	0	105
ENE	32	13	0	1	0	0	46
E	21	11	1	0	0	0	33
ESE	12	9	0	0	0	0	24
SE	28	31	5	0	0	0	66
SSE	49	10	3	1	0	0	63
S	48	36	7	0	0	0	92
SSW	61	37	5	2	0	0	106
SW	46	37	3	1	1	0	89
WSW	12	27	6	0	0	0	45
W	16	17	1	0	0	0	34
WNW	15	12	4	1	0	0	34
NW	6	21	8	1	0	0	36
NNW	6	1	8	2	0	0	17
TOTAL	416	330	68	14	1	1	842

PERIODS OF CALM(HOURS): 89
VARIABLE DIRECTION 0
HOURS OF MISSING DATA: 650

SITE: DUANE ARNOLD 04/07/05 15:07

HOURS AT EACH WIND SPEED AND DIRECTION
PERIOD OF RECORD = 04010101-04123124
STABILITY CLASS: G DT/DZ
ELEVATION: SPEED:WS33 DIRECTION:WD33 LAPSE:DEL T

WIND DIRECTION	WIND SPEED(MPH) 1-3	4-7	8-12	13-18	19-24	>24	TOTAL
N	12	1	2	0	1	1	20
NNE	20	5	0	0	0	2	30
NE	46	32	6	0	0	0	87
ENE	47	8	1	0	0	0	61
E	28	0	2	0	0	0	34
ESE	21	0	2	0	0	0	25
SE	17	5	0	0	0	0	26
SSE	22	2	1	0	0	0	31
S	26	4	5	1	0	0	44
SSW	67	5	0	1	0	0	78
SW	51	4	1	0	0	0	59
WSW	42	6	1	0	0	0	51
W	23	3	2	0	1	0	31
WNW	15	3	0	0	0	0	22
NW	7	3	4	1	0	0	16
NNW	2	0	10	1	0	0	14
TOTAL	446	81	37	4	2	3	629

PERIODS OF CALM(HOURS): 89
VARIABLE DIRECTION 0
HOURS OF MISSING DATA: 650

SITE: DUANE ARNOLD 04/07/05 15:07

HOURS AT EACH WIND SPEED AND DIRECTION
PERIOD OF RECORD = 04010101-04123124
STABILITY CLASS: ALL DT/DZ
ELEVATION: SPEED:WS33 DIRECTION:WD33 LAPSE:DEL T

WIND DIRECTION	WIND SPEED(MPH) 1-3	4-7	8-12	13-18	19-24	>24	TOTAL
N	53	81	83	34	9	3	267
NNE	75	112	104	27	1	2	324
NE	146	258	138	27	0	0	574
ENE	135	166	64	7	0	0	379
E	135	243	65	4	0	0	452
ESE	87	212	87	2	0	0	394
SE	83	275	126	2	0	1	495
SSE	165	352	178	11	0	0	712
S	174	450	276	40	3	0	953
SSW	208	236	151	32	14	0	648
SW	147	142	86	22	2	1	408
WSW	100	114	76	22	2	0	320
W	79	112	108	39	15	3	359
WNW	57	107	139	84	28	6	428
NW	33	212	253	126	49	11	686
NNW	22	92	412	182	24	1	735
TOTAL	1699	3164	2346	661	147	28	8134

PERIODS OF CALM(HOURS): 89
VARIABLE DIRECTION 0
HOURS OF MISSING DATA: 650

Wind Rose Data 33'

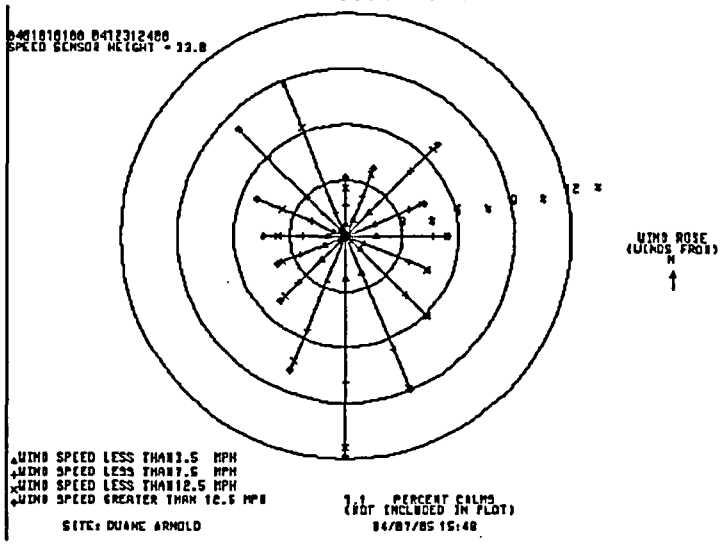

Figure 1 33' Wind Rose (Direction From)

Stability Class Data 156'

SPEED SENSOR HEIGHT = 156 FEET
STABILITY BASED ON DELTA-T

SITE: DUANE ARNOLD 04/07/05 15:30

HOURS AT EACH WIND SPEED AND DIRECTION
PERIOD OF RECORD = 04010101-04123124
STABILITY CLASS: A DT/DZ
ELEVATION: SPEED:WS156 DIRECTION:WD156 LAPSE:DEL T

WIND DIRECTION	WIND SPEED(MPH) 1-3	4-7	8-12	13-18	19-24	>24	TOTAL
N	5	10	35	4	4	2	60
NNE	2	10	17	14	0	0	43
NE	0	12	19	4	0	0	35
ENE	6	8	12	2	0	0	28
E	3	8	9	0	0	0	20
ESE	1	4	12	1	0	0	18
SE	1	5	27	11	0	0	44
SSE	2	23	37	52	8	0	122
S	0	30	55	49	15	2	151
SSW	1	11	28	30	8	1	79
SW	0	4	10	17	14	3	48
WSW	0	9	5	7	2	1	24
W	0	12	9	8	0	2	31
WNW	1	1	11	9	5	11	38
NW	2	10	21	23	5	4	65
NNW	0	7	13	24	2	0	47
TOTAL	24	164	320	255	63	26	853

PERIODS OF CALM(HOURS): 7
VARIABLE DIRECTION 0
HOURS OF MISSING DATA: 702

SITE: DUANE ARNOLD 04/07/05 15:30

HOURS AT EACH WIND SPEED AND DIRECTION

PERIOD OF RECORD = 04010101-04123124

STABILITY CLASS: B DT/DZ

ELEVATION: SPEED:WS156 DIRECTION:WD156 LAPSE:DEL T

WIND DIRECTION	WIND SPEED(MPH) 1-3	4-7	8-12	13-18	19-24	>24	TOTAL
N	0	1	2	3	0	0	6
NNE	1	1	5	2	0	0	9
NE	0	1	3	1	0	0	5
ENE	1	0	4	0	0	0	5
E	0	9	6	1	0	0	16
ESE	1	1	2	0	0	0	4
SE	0	2	4	1	0	0	7
SSE	0	4	5	3	1	0	13
S	2	3	6	8	3	1	23
SSW	0	3	8	1	2	1	15
SW	0	2	1	1	0	0	4
WSW	1	0	2	1	0	0	4
W	0	2	4	1	3	0	10
WNW	0	3	3	5	3	3	17
NW	0	4	6	9	6	2	27
NNW	0	2	6	8	5	0	21
TOTAL	6	38	67	45	23	7	186

PERIODS OF CALM(HOURS): 7

VARIABLE DIRECTION 0

HOURS OF MISSING DATA: 702

SITE: DUANE ARNOLD 04/07/05 15:30

HOURS AT EACH WIND SPEED AND DIRECTION

PERIOD OF RECORD = 04010101-04123124

STABILITY CLASS: C DT/DZ

ELEVATION: SPEED:WS156 DIRECTION:WD156 LAPSE:DEL T

WIND DIRECTION	WIND SPEED(MPH) 1-3	4-7	8-12	13-18	19-24	>24	TOTAL
N	0	4	6	4	0	0	14
NNE	0	1	5	3	0	0	9
NE	1	7	7	1	0	0	16
ENE	2	4	4	0	1	0	11
E	0	7	7	0	0	0	14
ESE	0	0	2	0	0	0	2
SE	2	6	6	3	0	0	17
SSE	0	4	5	2	2	0	13
S	1	8	9	11	3	1	33
SSW	1	3	7	6	1	1	19
SW	0	0	4	1	3	1	9
WSW	0	3	4	2	3	0	12
W	0	2	2	4	0	0	8
WNW	0	2	11	6	2	4	25
NW	0	2	5	15	2	3	27
NNW	0	1	5	1	1	1	9
TOTAL	7	54	89	59	18	11	238

PERIODS OF CALM(HOURS): 7

VARIABLE DIRECTION 0

HOURS OF MISSING DATA: 702

SITE: DUANE ARNOLD 04/07/05 15:30

HOURS AT EACH WIND SPEED AND DIRECTION

PERIOD OF RECORD = 04010101-04123124

STABILITY CLASS: D DT/DZ

ELEVATION: SPEED:WS156 DIRECTION:WD156 LAPSE:DEL T

WIND DIRECTION	WIND SPEED(MPH) 1-3	4-7	8-12	13-18	19-24	>24	TOTAL
N	8	16	37	20	2	1	85
NNE	12	19	48	37	4	0	120
NE	9	23	38	22	1	0	93
ENE	8	49	42	20	2	0	121
E	7	66	84	32	4	0	193
ESE	4	25	79	38	1	0	147
SE	5	20	61	35	1	0	122
SSE	3	38	78	58	18	0	195
S	11	32	75	78	22	7	225
SSW	6	16	45	44	11	3	125
SW	5	22	25	18	7	1	78
WSW	4	17	26	12	8	6	73
W	5	20	45	28	11	12	121
WNW	8	21	38	52	33	16	168
NW	7	31	117	106	67	26	354
NNW	3	17	86	140	37	1	284
TOTAL	105	432	924	740	229	73	2504

PERIODS OF CALM(HOURS): 7

VARIABLE DIRECTION 0

HOURS OF MISSING DATA: 702

SITE: DUANE ARNOLD 04/07/05 15:30

HOURS AT EACH WIND SPEED AND DIRECTION

PERIOD OF RECORD = 04010101-04123124

STABILITY CLASS: E DT/DZ

ELEVATION: SPEED:WS156 DIRECTION:WD156 LAPSE:DEL T

WIND DIRECTION	WIND SPEED(MPH) 1-3	4-7	8-12	13-18	19-24	>24	TOTAL
N	11	43	36	27	3	1	121
NNE	11	32	69	52	7	1	172
NE	8	51	65	12	3	0	139
ENE	3	40	41	6	1	0	91
E	6	35	52	13	0	0	106
ESE	8	42	94	18	2	0	164
SE	3	30	124	57	7	0	221
SSE	4	37	154	107	18	1	321
S	6	33	196	101	13	4	353
SSW	4	33	75	44	12	9	177
SW	7	32	34	33	4	5	115
WSW	9	31	26	32	4	3	105
W	5	22	34	31	17	2	111
WNW	7	16	59	48	21	10	161
NW	6	27	92	85	17	9	236
NNW	9	20	91	111	18	1	250
TOTAL	107	524	1242	777	147	46	2843

PERIODS OF CALM(HOURS): 7

VARIABLE DIRECTION 0

HOURS OF MISSING DATA: 702

SITE: DUANE ARNOLD 04/07/05 15:30

HOURS AT EACH WIND SPEED AND DIRECTION

PERIOD OF RECORD = 04010101-04123124

STABILITY CLASS: F DT/DZ

ELEVATION: SPEED:WS156 DIRECTION:WD156 LAPSE:DEL T

WIND DIRECTION	WIND SPEED(MPH) 1-3	4-7	8-12	13-18	19-24	>24	TOTAL
N	12	16	9	2	0	1	40
NNE	4	27	32	12	5	0	80
NE	6	13	22	1	1	0	43
ENE	5	20	12	0	0	0	37
E	3	8	12	1	0	0	24
ESE	1	3	20	1	0	0	25
SE	3	14	39	4	1	0	62
SSE	5	19	44	6	2	0	76
S	2	23	34	11	1	0	71
SSW	5	21	24	11	1	0	62
SW	6	18	19	9	0	2	54
WSW	4	20	24	10	0	0	58
W	8	32	22	3	0	0	66
WNW	5	21	19	8	0	0	53
NW	5	16	18	5	0	0	44
NNW	9	10	10	8	1	0	38
TOTAL	83	281	360	92	12	3	833

PERIODS OF CALM(HOURS): 7

VARIABLE DIRECTION 0

HOURS OF MISSING DATA: 702

SITE: DUANE ARNOLD 04/07/05 15:30

HOURS AT EACH WIND SPEED AND DIRECTION

PERIOD OF RECORD = 04010101-04123124

STABILITY CLASS: G DT/DZ

ELEVATION: SPEED:WS156 DIRECTION:WD156 LAPSE:DEL T

WIND DIRECTION	WIND SPEED(MPH) 1-3	4-7	8-12	13-18	19-24	>24	TOTAL
N	12	10	3	2	0	1	28
NNE	10	16	14	5	0	1	46
NE	6	20	13	4	0	0	44
ENE	12	14	11	1	0	0	38
E	10	17	9	0	0	0	36
ESE	3	7	9	1	0	0	20
SE	6	31	22	0	0	0	59
SSE	13	38	38	4	0	0	93
S	8	27	13	4	0	0	53
SSW	16	7	2	0	0	1	26
SW	8	14	6	1	0	0	30
WSW	8	8	3	1	0	0	20
W	8	9	7	2	1	1	28
WNW	5	9	6	1	0	0	21
NW	8	13	14	5	0	0	40
NNW	8	17	11	6	1	0	43
TOTAL	141	257	181	37	2	4	625

PERIODS OF CALM(HOURS): 7

VARIABLE DIRECTION 0

HOURS OF MISSING DATA: 702

SITE: DUANE ARNOLD 04/07/05 15:30

HOURS AT EACH WIND SPEED AND DIRECTION

PERIOD OF RECORD = 04010101-04123124

STABILITY CLASS: ALL DT/DZ

ELEVATION: SPEED:WS156 DIRECTION:WD156 LAPSE:DEL T

WIND DIRECTION	WIND SPEED(MPH) 1-3	4-7	8-12	13-18	19-24	>24	TOTAL
N	48	100	128	62	9	6	354
NNE	40	106	190	125	16	2	479
NE	30	127	167	45	5	0	375
ENE	37	135	126	29	4	0	331
E	29	150	179	47	4	0	409
ESE	18	82	218	59	3	0	380
SE	20	108	283	111	9	0	532
SSE	27	163	361	232	49	1	833
S	30	156	388	262	57	15	909
SSW	33	94	189	136	35	16	503
SW	26	92	99	80	28	12	338
WSW	26	88	90	65	17	10	296
W	26	99	123	77	32	17	375
WNW	26	73	147	129	64	44	483
NW	28	103	273	248	97	44	793
NNW	29	74	222	298	65	3	692
TOTAL	473	1750	3183	2005	494	170	8082

PERIODS OF CALM(HOURS): 7

VARIABLE DIRECTION 0

HOURS OF MISSING DATA: 702

Wind Rose Data 156'

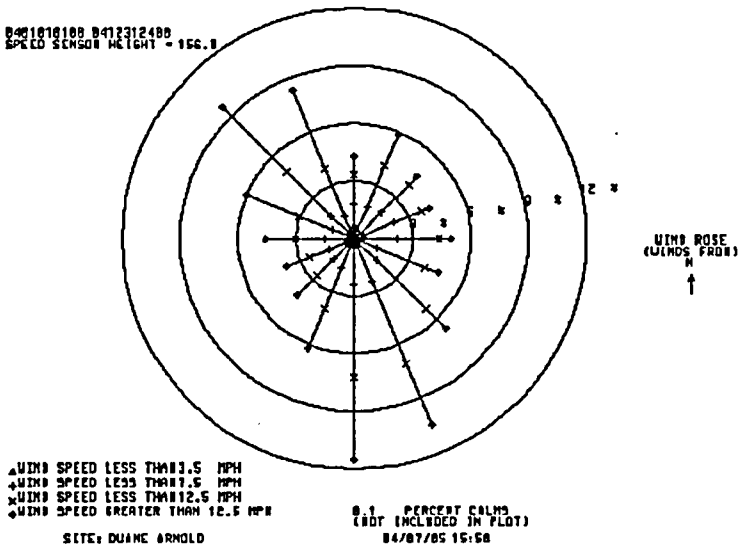

Figure 2 156' Wind Rose (Direction From)

ATTACHMENT 1:
SUMMARY OF THE DAEC CHEMISTRY LAB CROSS CHECK PROGRAM

The Duane Arnold Energy Center's Chemistry department has participated in an Interlaboratory Cross-Check program with Analytics Inc. for more than 15 years.

Listed below is a summary of the results of the program in 2004. Also included is the third and fourth quarter results from 2003.

Period	Sample #	Sample Type	ANALYSIS	DAEC Value	Analytics Value	Ratio:	
Quarter 3, 2003	A17289-70	Liquid	Ce-141	5.81E-03	5.87E-03	0.99	AGREEMENT
			Cr-51	1.71E-02	1.81E-02	0.95	AGREEMENT
			Cs-134	3.60E-03	4.08E-03	0.88	AGREEMENT
			Cs-137	3.02E-03	2.93E-03	1.03	AGREEMENT
			Co-58	4.67E-03	4.55E-03	1.03	AGREEMENT
			Mn-54	3.56E-03	3.33E-03	1.07	AGREEMENT
			Fe-59	4.63E-03	4.43E-03	1.05	AGREEMENT
			Zn-65	6.81E-03	6.39E-03	1.07	AGREEMENT
			Co-60	4.36E-03	4.13E-03	1.05	AGREEMENT
			Co-57	9.71E-05	NOT DETECTED		
Quarter 3, 2003	A17290-70*	Filter	Ce-141	2.92E-02	3.14E-02	0.93	AGREEMENT
			Cr-51	8.81E-02	9.67E-02	0.91	AGREEMENT
			Cs-134	1.83E-02	2.18E-02	0.84	AGREEMENT
			Cs-137	1.54E-02	1.57E-02	0.98	AGREEMENT
			Co-58	2.33E-02	2.44E-02	0.96	AGREEMENT
			Mn-54	1.83E-02	1.78E-02	1.03	AGREEMENT
			Fe-59	2.47E-02	2.37E-02	1.04	AGREEMENT
			Zn-65	3.55E-02	3.43E-02	1.04	AGREEMENT
			Co-60	2.25E-02	2.21E-02	1.02	AGREEMENT
			Co-57	4.64E-04	NOT DETECTED		
Quarter 3, 2003	A17286-70		Gross Beta	3.99E-03	3.98E-03	1.00	AGREEMENT
Quarter 3, 2003	A17287-70		Gross Alpha	9.73E-04	9.26E-04	1.05	AGREEMENT
Quarter 3, 2003	A17288-70		Tritium	1.44E-03	1.52E-03	0.95	AGREEMENT
Quarter 3, 2003	A17291-70		I-131	3.66E-01	3.91E-01	0.94	AGREEMENT
Quarter 3, 2003	A17292-70*		Xe-133	7.85E-01	7.15E-01	1.10	AGREEMENT
			Kr-85	8.56E+00	7.52E+00	1.14	AGREEMENT

Period	Sample #	Sample Type	ANALYSIS	DAEC Value	Analytics Value	Ratio:	
Quarter 4, 2003	A17585-70		Ce-141	1.04E-02	1.04E-02	1.00	AGREEMENT
			Cr-51	1.62E-02	1.60E-02	1.01	AGREEMENT
			Cs-134	3.86E-03	4.03E-03	0.96	AGREEMENT
			Cs-137	3.90E-03	3.76E-03	1.04	AGREEMENT
			Co-58	4.32E-03	4.18E-03	1.03	AGREEMENT
			Mn-54	5.63E-03	5.33E-03	1.06	AGREEMENT
			Fe-59	4.94E-03	4.52E-03	1.09	AGREEMENT
			Zn-65	6.51E-03	6.17E-03	1.06	AGREEMENT
			Co-60	4.57E-03	4.64E-03	0.99	AGREEMENT
			Co-57	1.89E-04	----	---	
Quarter 4, 2003	A17586-70*		Ce-141	4.68E-02	5.08E-02	0.92	AGREEMENT
			Cr-51	7.24E-02	7.79E-02	0.93	AGREEMENT
			Cs-134	1.70E-02	1.97E-02	0.86	AGREEMENT
			Cs-137	1.76E-02	1.83E-02	0.96	AGREEMENT
			Co-58	2.00E-02	2.04E-02	0.98	AGREEMENT
			Mn-54	2.55E-02	2.60E-02	0.98	AGREEMENT
			Fe-59	2.26E-02	2.20E-02	1.03	AGREEMENT
			Zn-65	3.09E-02	3.01E-02	1.03	AGREEMENT
			Co-60	2.14E-02	2.27E-02	0.94	AGREEMENT
			Co-57	8.18E-04	----	---	
Quarter 4, 2003	A17582-70		Gross Beta	3.70E-03	3.66E-03	1.01	AGREEMENT
Quarter 4, 2003	A17583-70		Gross Alpha	1.02E-03	9.88E-04	1.03	AGREEMENT
Quarter 4, 2003	A17584-70		Tritium	1.35E-03	1.42E-03	0.95	AGREEMENT
Quarter 4, 2003	A17587-70*		I-131	2.53E-01	2.49E-01	1.01	AGREEMENT
Quarter 4, 2003	A17588-70*		Xe-133	8.22E-01	8.07E-01	1.02	AGREEMENT
			Kr-85	8.20E+00	8.03E+00	1.02	AGREEMENT
Quarter 1, 2004	A17824-70		Ce-141	5.15E-03	5.28E-03	0.97	AGREEMENT
			Cr-51	2.11E-02	2.24E-02	0.94	AGREEMENT
			Cs-134	2.82E-03	3.21E-03	0.88	AGREEMENT
			Cs-137	6.54E-03	6.48E-03	1.01	AGREEMENT
			Co-58	5.14E-03	5.10E-03	1.01	AGREEMENT
			Mn-54	4.32E-03	4.22E-03	1.02	AGREEMENT
			Fe-59	3.11E-03	3.02E-03	1.03	AGREEMENT
			Zn-65	5.75E-03	5.38E-03	1.07	AGREEMENT
			Co-60	5.33E-03	5.39E-03	0.99	AGREEMENT
			Co-57	4.63E-04	NOT DETECTED		AGREEMENT
Quarter 1, 2004	A17825-70*		Ce-141	2.52E-02	2.71E-02	0.93	AGREEMENT
			Cr-51	1.05E-01	1.15E-01	0.91	AGREEMENT
			Cs-134	1.35E-02	1.65E-02	0.82	AGREEMENT
			Cs-137	3.19E-02	3.32E-02	0.96	AGREEMENT
			Co-58	2.57E-02	2.61E-02	0.98	AGREEMENT
			Mn-54	2.13E-02	2.16E-02	0.98	AGREEMENT
			Fe-59	1.53E-02	1.55E-02	0.99	AGREEMENT
			Zn-65	2.80E-02	2.76E-02	1.01	AGREEMENT
			Co-60	2.61E-02	2.76E-02	0.94	AGREEMENT
			Co-57	2.26E-03	NOT DETECTED		AGREEMENT

Period	Sample #	Sample Type	ANALYSIS	DAEC Value	Analytics Value	Ratio:	
Quarter 1, 2004	A17821-70		Gross Beta	8.76E-04	8.92E-04	0.98	AGREEMENT
Quarter 1, 2004	A17822-70		Gross Alpha	5.29E-04	4.85E-04	1.09	AGREEMENT
Quarter 1, 2004	A17823-70		Tritium	8.96E-04	9.25E-04	0.97	AGREEMENT
Quarter 1, 2004	A17826-70*		I-131	4.82E-01	5.13E-01	0.94	AGREEMENT
Quarter 1, 2004	A17827-70*		Xe-133	6.72E-01	6.05E-01	1.11	AGREEMENT
			Kr-85	9.28E+00	8.03E+00	1.15	AGREEMENT
Quarter 2, 2004	A18136-70		Ce-141	9.14E-03	8.99E-03	1.02	AGREEMENT
			Cr-51	1.47E-02	1.48E-02	1.00	AGREEMENT
			Cs-134	2.69E-03	2.90E-03	0.93	AGREEMENT
			Cs-137	4.61E-03	4.34E-03	1.06	AGREEMENT
			Co-58	1.94E-03	1.80E-03	1.08	AGREEMENT
			Mn-54	2.34E-03	2.11E-03	1.11	AGREEMENT
			Fe-59	2.43E-03	2.10E-03	1.16	AGREEMENT
			Zn-65	3.36E-03	3.04E-03	1.10	AGREEMENT
			Co-60	5.02E-03	4.83E-03	1.04	AGREEMENT
Quarter 2, 2004	A18137-70*		Ce-141	5.54E-03	6.04E-02	0.92	AGREEMENT
			Cr-51	8.81E-02	9.94E-02	0.89	AGREEMENT
			Cs-134	1.67E-02	1.95E-02	0.86	AGREEMENT
			Cs-137	2.85E-02	2.91E-02	0.98	AGREEMENT
			Co-58	1.20E-02	1.21E-02	0.99	AGREEMENT
			Mn-54	1.40E-02	1.42E-02	0.99	AGREEMENT
			Fe-59	1.44E-02	1.41E-02	1.02	AGREEMENT
			Zn-65	2.16E-02	2.04E-02	1.06	AGREEMENT
			Co-60	3.21E-02	3.24E-02	0.99	AGREEMENT
Quarter 2, 2004	A18133-70		Gross Beta	1.59E-03	1.57E-03	1.05	AGREEMENT
Quarter 2, 2004	A18134-70		Gross Alpha	1.75E-03	1.66E-03	1.05	AGREEMENT
Quarter 2, 2004	A18135-70		Tritium	7.21E-04	7.61E-04	0.95	AGREEMENT
Quarter 2, 2004	A18138-70		I-131	2.99E-01	2.97E-01	1.01	AGREEMENT
Quarter 2, 2004	A18139-70		Xe-133	7.93E-01	7.76E-01	1.02	AGREEMENT
			Kr-85	8.86E+00	8.53E+00	1.04	AGREEMENT
Quarter 3, 2004	A18404-70	Liquid	Ce-141	1.03E-02	1.06E-02	0.97	AGREEMENT
			Cr-51	9.96E-03	1.05E-02	0.95	AGREEMENT
			Cs-134	2.05E-03	2.36E-03	0.87	AGREEMENT
			Cs-137	5.12E-03	5.15E-03	0.99	AGREEMENT
			Co-58	2.88E-03	2.95E-03	0.98	AGREEMENT
			Mn-54	4.71E-03	4.45E-03	1.06	AGREEMENT
			Fe-59	3.56E-03	3.33E-03	1.07	AGREEMENT
			Zn-65	4.81E-03	4.60E-03	1.04	AGREEMENT
			Co-60	2.99E-03	3.02E-03	0.99	AGREEMENT
Quarter 3, 2004	A18405-70*	Filter	Ce-141	5.80E-02	6.35E-02	0.91	AGREEMENT
			Cr-51	5.60E-02	6.27E-02	0.89	AGREEMENT
			Cs-134	1.18E-02	1.41E-02	0.84	AGREEMENT
			Cs-137	2.93E-02	3.07E-02	0.95	
			Co-58	1.66E-02	1.76E-02	0.94	AGREEMENT
			Mn-54	2.69E-02	2.65E-02	1.01	AGREEMENT
			Fe-59	2.02E-02	1.99E-02	1.02	AGREEMENT

Period	Sample #	Sample Type	ANALYSIS	DAEC Value	Analytics Value	Ratio:	
			Zn-65	2.77E-02	2.75E-02	1.01	AGREEMENT
			Co-60	1.67E-02	1.80E-02	0.93	AGREEMENT
Quarter 3, 2004	A18401-70		Gross Beta	3.08E-03	3.08E-03	1.00	AGREEMENT
Quarter 3, 2004	A18402-70		Gross Alpha	4.00E-04	3.68E-01	1.09	AGREEMENT
Quarter 3, 2004	A18403-70		Tritium	9.76E-01	9.83E-04	0.99	AGREEMENT
Quarter 3, 2004	A18405-70*		I-131	1.98E-01	2.02E-01	0.98	AGREEMENT
Quarter 3, 2004	A18407-70		Xe-133	9.82E-01	8.66E-01	1.13	AGREEMENT
			Kr-85	9.42E+00	8.18E+00	1.15	AGREEMENT
Quarter 4, 2004	A18682-70		Ce-141	6.93E-03	6.88E-03	1.01	AGREEMENT
			Cr-51	1.88E-02	1.86E-02	1.01	AGREEMENT
			Cs-134	4.06E-03	4.35E-03	0.93	AGREEMENT
			Cs-137	3.38E-03	3.15E-03	1.07	AGREEMENT
			Co-58	5.05E-03	4.75E-03	1.06	AGREEMENT
			Mn-54	3.96E-03	3.60E-03	1.1	AGREEMENT
			Fe-59	5.25E-03	4.61E-03	1.14	AGREEMENT
			Zn-65	5.92E-03	5.28E-03	1.12	AGREEMENT
			Co-60	4.60E-03	4.46E-03	1.03	AGREEMENT
			Co-57	1.25E-04	**		AGREEMENT
Quarter 4, 2004	A18683-70*		Ce-141	3.37E-02	3.72E-02	0.91	AGREEMENT
			Cr-51	9.07E-02	1.01E-01	0.9	AGREEMENT
			Cs-134	1.96E-02	2.35E-02	0.84	AGREEMENT
			Cs-137	1.65E-02	1.70E-02	0.97	AGREEMENT
			Co-58	2.47E-02	2.57E-02	0.96	AGREEMENT
			Mn-54	1.95E-02	1.95E-02	1.00	AGREEMENT
			Fe-59	2.57E-02	2.49E-02	1.03	AGREEMENT
			Zn-65	2.98E-02	2.85E-02	1.04	AGREEMENT
			Co-60	2.34E-02	2.41E-02	0.97	AGREEMENT
			Co-57	7.41E-04	**		AGREEMENT
Quarter 4, 2004	A18679-70		Gross Beta	3.75E-03	3.80E-03	0.99	AGREEMENT
Quarter 4, 2004	A18680-70		Gross Alpha	9.53E-04	8.78E-04	1.09	AGREEMENT
Quarter 4, 2004	A18681-70		Tritium	1.35E-03	1.40E-03	0.96	AGREEMENT
Quarter 4, 2004	A18684-70*		I-131	3.97E-01	4.02E-01	0.99	AGREEMENT
Quarter 4, 2004	A18685-70*		Xe-133	5.89E-01	5.62E-01	1.05	AGREEMENT
			Kr-85	8.37E+00	8.04E+00	1.04	AGREEMENT

* µCi
** Detected but not measured.

ATTACHMENT 2:
ODAM CHANGES IN 2004

Revision 19 →Revision 20

Revision 20 of the ODAM was made effective on December 27th, 2004.

Changes implemented were:

1. ODAM Figure 3.1 was improved. Figure 3.1 is a simplified drawing of the Gaseous Radioactive systems.
2. ODAM table 6.1-1/7.1-1 previously listed a requirement for the flow rate measurement device on the liquid radwaste effluent line. The requirement was changed from "At all times" to "During Releases". The liquid radwaste effluent line is isolated with three separate valves. All three valves are physically secured with lock.
3. ODAM section 3.2 and ODAM table 6.3-2 previously allowed for NOT reporting gaseous effluents when the measured effluent was identified at a value less than the LLD. The DAEC reports the presence of all identified radioactive effluents even when the measured value is below the required LLD.
4. ODAM table 6.3-1 previously listed a requirement for two TLDs at each TLD monitoring station. The requirement was changed to one TLD at each TLD monitoring location.

ATTACHMENT 3: CURRENT REVISION OF THE ODAM

MANUAL CONTENTS	USAGE LEVEL	TITLE	REV.	DATE
ODAM		Offsite Dose Assessment Manual for Gaseous and Liquid Effluents	20	12/27/04

OFFSITE DOSE ASSESSMENT MANUAL
GASEOUS AND LIQUID EFFLUENTS

Duane Arnold Energy Center

Validated by: _____ 16-oct-2004
Chemistry Staff — Date

Approved by: _____ 21 OCT 2004
Chemistry Manager — Date

Reviewed by: _____ 12/20/2004
Operations Committee — Date

Approved by: _____ 12/22/04
DAEC Plant Manager — Date

Issue Date: DEC 27 2004

REVISION CONTROL SHEET

Section	Title	Rev	Date
1.0/2.0	INTRODUCTION/ LIQUID EFFLUENT	20	10/2004
3.0	GASEOUS EFFLUENT	20	10/2004
4.0	DOSE COMMITMENT FROM RELEASE OVER EXTENDED TIME	20	10/2004
5.0	RADIOLOGICAL ENVIRONMENTAL MONITORING PROGRAM SAMPLING STATION LOCATIONS	20	10/2004
6.0	RADIOLOGICAL EFFLUENT CONTROLS AND SURVEILLANCE REQUIREMENTS	20	10/2004
6/7.1	RADIOACTIVE LIQUID EFFLUENT CONTROLS AND SURVEILLANCE REQUIREMENTS	20	10/2004
6/7.2	RADIOACTIVE GASEOUS EFFLUENT CONTROLS AND SURVEILLANCE REQUIREMENTS	20	10/2004
6/7.3	OFFSITE DOSE ASSESSMENT CONTROLS AND SURVEILLANCE REQUIREMENTS	20	10/2004
6.4	REPORTING REQUIREMENTS	20	10/2004
8.0	DESCRIPTION OF THE RADIOACTIVE EFFLUENT CONTROLS PROGRAM	20	10/2004
APPENDIX A: DOSE TRANSFER FACTORS FOR AIRBORNE PATHWAYS		20	10/2004
APPENDIX B: TECHNICAL BASES FOR EFFECTIVE DOSE FACTORS		20	10/2004
APPENDIX C: DOSE TRANSFER FOR WATERBORNE PATHWAYS		20	10/2004

TABLE OF CONTENTS

Section	Title	Page
1.0	INTRODUCTION	6
2.0	LIQUID EFFLUENT	6
2.1	Radioactivity In Liquid Waste	6
2.2	Aqueous Concentration	7
2.3	Basis of Mixing Ratios	8
2.4	Method of Establishing Alarm Setpoints	8
	2.4.1 Setpoint for a Batch Release	9
	2.4.2 Setpoint for a Continuous Release	10
2.5	Radioactivity Concentration in Water at the Restricted Area Boundary	12
2.6	Accumulated Personal Maximum Dose	12
2.7	Projected Dose to a Person Offsite	15
3.0	GASEOUS EFFLUENT	17
3.1	Introduction	17
3.2	Radioactivity in Gaseous Effluent	17
3.3	Main Condenser Offgas Pretreatment Monitor Alarm Setpoint	18
3.4	Effluent Noble Gas Monitor Alarm Setpoint	20
3.5	Dose Equivalent Rate Offsite	23
	3.5.1 Noble Gas	23
	3.5.1.1 Total Body Dose Rate	23
	3.5.1.2 Skin Dose Rate	24
	3.5.2 Iodine, Tritium, and Particulates	26
	3.5.2.1 Organ Dose Rate	26
3.6	Noble Gas Gamma Radiation Dose Accumulated in Air	27
	3.6.1 Alternate Method of Evaluating Compliance with Gamma Air Dose Limits	29
3.7	Noble Gas Beta Radiation Dose Accumulated in Air	31
3.8	Dose Due to Iodine and Particulates in Gaseous Effluents	32
	3.8.1 Alternate Method of Evaluating Doses Due to Iodine and Particulates in Gaseous Effluents	35
3.9	Dose to a Person from Noble Gases	36
	3.9.1 Gamma Dose to Total Body	36
	3.9.2 Dose to Skin	37
4.0	DOSE COMMITMENT FROM RELEASE OVER EXTENDED TIME	47
4.1	Dose Assessment for 10 CFR Part 50, Appendix I	47
4.2	Dose Assessment for 40 CFR Part 190	48
5.0	RADIOLOGICAL ENVIRONMENTAL MONITORING PROGRAM SAMPLING STATION LOCATIONS	50
5.1	Radiological Environmental Monitoring Program	50
5.2	Sampling Station Locations	50

TABLE OF CONTENTS (continued)

Section	Title	Page
6.0	RADIOLOGICAL EFFLUENT CONTROLS AND SURVEILLANCE REQUIREMENTS	58
6.0.1	Use and Application	58
	6.0.1.1 Definitions	58
	6.0.1.2 Logical Connectors	60
	6.0.1.3 Completion Times	61
	6.0.1.4 Frequency	63
6.0.2	(not used)	
6.0.3	Limiting Conditions for Operation Applicability	64
7.0.3	Surveillance Requirement Applicability	66
6/7.1	Radioactive Liquid Effluent Controls and Surveillance Requirements	67
6.1.1	Radioactive Liquid Effluent Instrumentation	70
6.1.2	Liquid Effluent Concentration	71
6.1.3	Dose Due to Radioactive Effluents	77
6.1.4	Liquid Waste Treatment	79
6.1.5	Liquid Holdup Tanks	81
6/7.2	Radioactive Gaseous Effluent Controls and Surveillance Requirements	83
6.2.1.1	Radioactive Gaseous Effluent Instrumentation	83
6.2.1.2	Offgas Radioactive Gaseous Effluent Instrumentation	88
6.2.2	Gaseous Effluent Dose Rate	92
6.2.3	Doses Due to Noble Gases	97
6.2.4	Doses Due to Iodine and Particulates in Air	99
6.2.5	Gaseous Radwaste Treatment	101
6.2.6	Mechanical Vacuum Pump Radiation Release Rate	103
6/7.3	Offsite Dose Assessment Controls and Surveillance Requirements	105
6.3.1	Dose	105
6.3.2	Radiological Environmental Monitoring Program	107
BASES		
6.1.1 and 7.1.1	BASES	114
6.1.2 and 7.1.2	BASES	115
6.1.3 and 7.1.3	BASES	116
6.1.4 and 7.1.4	BASES	117
6.1.5 and 7.1.5	BASES	118
6.2.1 and 7.2.1	BASES	119
6.2.2 and 7.2.2	BASES	121
6.2.3 and 7.2.3	BASES	121
6.2.4 and 7.2.4	BASES	121
6.2.5 and 7.2.5	BASES	122
6.3.1 and 7.3.1	BASES	123
6.3.2 and 7.3.2	BASES	123

TABLE OF CONTENTS (continued)

Section	Title	Page	Title
8.0	ADMINISTRATIVE CONTROLS	124	
8.1	Programs and Manuals	124	
8.1.1	Description of the Radioactive Effluent Controls Program	124	
8.1.2	The Radiological Environmental Monitoring Program	125	
8.1.3	Interlaboratory Comparison Program	125	
8.2	Reporting Requirements	126	
8.2.1	Annual Radioactive Material Release Report	126	
8.2.2	Annual Radiological Environmental Report	129	
8.2.3	Special Reports	130	
APPENDIX A:	DOSE TRANSFER FACTORS FOR AIRBORNE PATHWAYS	A-1	
APPENDIX B:	TECHNICAL BASES FOR EFFECTIVE DOSE FACTORS	B-1	
APPENDIX C:	DOSE TRANSFER FOR WATERBORNE PATHWAYS	C-1	

OFFSITE DOSE ASSESSMENT MANUAL
FOR GASEOUS AND LIQUID EFFLUENTS

1.0 INTRODUCTION

This Manual describes acceptable methods of calculating radioactivity concentrations in the environment and the potentially resultant committed doses to a member of the public in the unrestricted area[a] that are associated with LWR liquid and gaseous effluents. The methodology stated in this Manual is acceptable for use in demonstrating operational compliance with 10 CFR 20.1301, 10 CFR 50 Appendix I, 10 CFR 72.104, and 40 CFR 190. Only the dose attributable to the Duane Arnold Energy Center[d] is considered in demonstrating compliance with 40 CFR 190 since no other nuclear facility exists within 50 miles of the Center.

Calculations are made monthly to assess the potential air doses offsite and to a nearby resident in order to guide the management of station effluents. The receptor is described such that the dose to any resident near the Station is unlikely to be underestimated. Calculations made to assess the radioactive noble gas dose to air are based on the location offsite that could be occupied by a person where the maximum airdose is expected. For these monthly-accumulated dose calculations, atmospheric dispersion and deposition of gaseous effluents is based on reference meteorological conditions.[e] More conservative conditions (i.e., location and/or exposure pathways expected to yield higher computed doses) than appropriate for the maximally exposed person may be assumed in the dose estimated.

Calculations of dose committed from radioactive releases over extended time (3 and 12 months) are also made for the purpose of verifying compliance with regulatory limits on offsite dose. For these calculations the receptor is selected on the basis of the combination of applicable exposure pathways identified in the land use census and the maximum ground level χ/Q_1 at a residence, or on the basis of more conservative conditions such that the dose to any resident near the Station is unlikely to be underestimated.

2.0 LIQUID EFFLUENT

2.1 Radioactivity In Liquid Waste

The concentration of radionuclides in liquid waste is determined by sampling and analysis in accord with the surveillance requirements of Section 7.1.2, Table 7.1-2. When a radionuclide concentration is below the LLD for the analysis, it is not reported as being present in the sample.

---

[a] Unrestricted area means outside of the boundary of property owned, leased, or controlled by the Company on which DAEC is sited. The DAEC site boundary is identified by UFSAR Figure 1.2-1.

[d] The Duane Arnold Energy Center, also referred to henceforth as the Station, is defined as including BOTH the Nuclear Reactor Facility and the Independent Spent Fuel Storage Installation (ISFSI).

[e] Reference meteorological conditions are 1971, 1974 and 1975 data composited as discussed in "Duane Arnold Energy Center, Evaluation of Liquid and Gaseous Effluent Releases In Accordance With 10 CFR 50 Appendix I," submitted to the NRC June 3, 1976.

2.2 Aqueous Concentration

Radioactive material in liquid effluent is diluted successively by water flowing in the discharge canal and in the River. The diluted concentration of radionuclide *i* in a receiving stream is estimated with the equation

$$C_{zi} = C_i \frac{F_1}{F_2}$$

where

C_i = concentration of radionuclide *i* in liquid radwaste released (µCi/mL)

C_{zi} = concentration of radionuclide *i* in the receiving stream (µCi/mL)

F_1 = release rate of liquid radwaste (mL/sec)[d]

F_2 = dilution flow of receiving stream of water (mL/sec)[d]

For the purpose of calculating the radioactivity concentration in water at the restricted area boundary (section 2.5), the flow in the discharge canal, F_c, is assigned to F_2. The water flow in the discharge canal may include the liquid waste effluent flow, the liquid radwaste dilution water flow, the cooling tower blowdown flow and other streams such as RHR and emergency service water discharged via the dilution structure and discharge canal. These streams are illustrated in Figure 2-1.

In the River immediately beyond the discharge canal and the restricted area boundary, the effective dilution is

$$F_2 = F_c \, x \, M$$

where

F_c = discharge canal flow

M = factor of additional mixing in the River

A near field mixing ratio from the canal into the near field of the River, M = 5, is assigned when estimating maximum potential individual doses involving exposure by eating fish or from consuming irrigated foods. In the event water is drawn from the River downstream of the Station for drinking water or another exposure pathway, F_2 represents the portion of the River flow into which the liquid effluent from the Station is effectively mixed.

---

[d] F_1, F_2, and F_c may have any convenient units of flow (i.e., volume/time) provided the units of all are identical.

2.3 Basis of Mixing Ratios

Downstream dilution of aqueous discharge from the DAEC has been estimated based on thermal plume studies conducted in 1974 at the DAEC[e]. Measurements of the discharge temperature and river temperature indicated that the 1°F excess temperature isotherm was about 350 feet downstream of the discharge. This 1°F isotherm represented a dilution of the discharge by the Cedar River of about a factor of 12.

In determining additional dilution within the receiving water for evaluating doses from a plant with cooling towers, the NRC guideline[f] is that the factor should be limited to a number such that the product of the number and the average blowdown flow to the receiving water body is 1000 cfs or less. At the DAEC, the discharge rate can be conservatively approximated by a cooling tower blowdown rate of 4000 gpm, or about 9 cfs. Using the NRC guideline, an additional dilution of 100 in the Cedar River could be assumed for evaluating doses due to liquid effluent. Since the average flow in the Cedar River is about 3065 cfs, the additional dilution in the River is achievable.

These results indicate both a dilution factor of 12 at a downstream distance of 350 feet and conformance to the NRC guideline. Therefore, it is conservative to assume the dilution factors of 5 for fish or irrigation and 10 for drinking water for the evaluation of doses during DAEC operation.

2.4 Method of Establishing Alarm Setpoints

The liquid radwaste effluent line has a monitor which provides automatic isolation when 10 times the water effluent concentration listed in 10 CFR 20 Appendix B, Table 2, is being exceeded in the unrestricted area. The other liquid effluent pathways have monitors which provide alarms when 10 times the 10 CFR 20 water effluent concentration is being exceeded in the unrestricted area. Given the nature and frequency of discharges, prompt action to reduce radioactive releases following an alarm, will assure the requirements of 10 CFR Part 20. 1301; 10 CFR Part 50 Appendix I, Section IV; and 40 CFR Part 190 are not exceeded.

The alarm setpoint for the liquid effluent radiation monitor is derived from the concentration limit provided in 10 CFR Part 20.1001-20.2401 Appendix B Table 2 Column 2 applied at the unrestricted area boundary where the discharge canal flows into the river. The alarm setpoint does not consider dilution, dispersion, or decay of radioactive material beyond the site boundary. That is, the alarm setpoint is based on a concentration limit at the end of the discharge canal. The radiation monitoring and isolation points are located in each line through which radioactive waste effluent is eventually discharged into the discharge canal.

The alarm setpoint for effluent monitors on batch releases is based on measurements, according to Table 7.1-2. For liquids released in continuous aqueous discharge which are normally radioactively clean, the setpoint is based on the effective Water Effluent

---

[e] IELP, Cedar River Baseline Ecological Study, DAEC, annual report, Jan. 1974-Jan. 1975.

[f] Boegli, J.S., et. al., Preparation of Radiological Effluent Technical Specifications for Nuclear Power Plants, NUREG-0133, p. 16, October, 1978

Concentration (WEC) for the most likely contaminating source, i.e., the primary coolant water. A measured spectrum from the primary coolant water is used to determine the effective WEC based on WEC fractions according to 10 CFR 20 Appendix B. Alternately, the alarm setpoint may be based upon gross β-γ activity analysis of the liquid waste provided the unrestricted area WEC for unidentified emitters, 1×10^{-8} μCi/mL, is observed in accord with Section 7.1.2.

2.4.1 Setpoint for a Batch Release

A sample of each batch of liquid radwaste is analyzed for I-131 and other principal gamma emitters, or for total activity concentration prior to release. The ratio, $FWEC_b$, of the activity concentration in the tank to the unrestricted area WEC (10 CFR Part 20, Appendix B, Table 2, Column 2) is calculated with the equation

$$FWEC_b = \sum_i \frac{C_{bi}}{WEC_i}$$

where

$FWEC_b$ = fraction of unrestricted area WEC in batch derived from activity measured prior to release.

C_{bi} = concentration of radionuclide *i* (including I-131 and principal gamma emitters) in batch sample taken prior to release (μCi/mL)

In the event total or gross β-γ analysis alone is used to determine the radioactivity in a batch prior to release, the fraction of the unrestricted area WEC in the batch is just

$$FWEC_b = \frac{C_b}{1 \bullet 10^{-8}}$$

where

C_b = the total or gross b-g activity measured in the batch sample (μCi/mL)

1×10^{-8} = the unrestricted area WEC for unidentified radionuclides (μCi/mL)

Whether radioiodine and primary gamma emitters are identified prior to a batch release or not, the liquid radwaste effluent line radiation monitor alarm setpoint is determined with the equation

$$S = 10 x \left[\frac{A}{FWEC_b} \bullet \frac{Fs_2}{Fs_1} \bullet g \right] + Bkg$$

where

S = radiation monitor alarm setpoint (cpm)

10 = factor to account for fact that DAEC's instantaneous release limit is ten times the listed WECs

A = counting rate (cpm/mL) or activity concentration (µCi/mL) of sample in laboratory analysis. A equals $\sum_i C_{bi}$ if an isotopic analysis were performed or C_b if a gross activity analysis was performed.

g = ratio of effluent radiation monitor counting rate to laboratory counting rate or activity concentration in a given batch of liquid (cpm per cpm/mL or cpm per µCi/mL)

Bkg = monitoring instrument background (cpm)

Fs_1 = flow in the batch release line (gal/min). Value not greater than the discharge line flow alarm maximum setpoint.

Fs_2 = minimum flow in the discharge canal (gal/min).[9] Value not less than the discharge canal flow alarm minimum setpoint.

Note that $A/FWEC_b$ represents the counting rate of a solution having the same radionuclide distribution as the sample and having the water effluent concentration of that mixture.

2.4.2 Setpoint for a Continuous Release

Continuous aqueous discharges are sampled and analyzed according to the schedule in Table 7.1-2. The ratio, $FWEC_c$, of the activity concentration in each of the continuous release streams to the unrestricted area WEC is calculated with the equations

$$FWEC_c = \sum_i \frac{C_{ci}}{WEC_i}$$

where

$FWEC_c$ = fraction of unrestricted area WEC in continuous release based upon activity measured in primary coolant sample(s)

C_{ci} = concentration of radionuclide *i* in sample(s) (µCi/mL)

---

[9] Any suitable but identical units of flow (volume/time)

In the event the total or gross b-g analysis alone is used to determine the radioactivity, the fraction of the unrestricted area WEC in the continuous release is

$$FWEC_c = \frac{C_c}{1 \bullet 10^{-8}}$$

where

C_c = the total or gross β-γ activity measured in the continuous release sample (μCi/mL).

The alarm setpoint of the radiation monitor on a continuous radioactive discharge line is determined with the equation

$$S = 10x\left[\frac{A}{FWEC_c} \bullet \frac{Fs_2}{Fs_1} \bullet g\right] + Bkg$$

where

10 = factor to account for fact that DAEC's instantaneous release limit is ten times the listed WECs

A = activity concentration (μCi/mL) or counting rate (cpm/mL) in laboratory of monthly reactor primary coolant sample.

Fs_1 = Flow in the liquid discharge line (mL/sec).[h] Value not greater than off discharge line flow alarm maximum setpoint.

Fs_2 = flow in the discharge canal (mL/sec).[h] Value not less than discharge canal flow alarm minimum setpoint.

g = ratio of effluent radiation monitor counting rate to laboratory counting rate or activity concentration in a given batch of liquid (cpm per cpm/mL or cpm per μCi/mL)

The radioactivity concentration in continuous aqueous effluent is usually so low that measurement of a representative radionuclide in a sample of the water is uncertain. Thus, the ratio, $A/FWEC_c$, which represents the WEC of a given spectrum of radionuclides, is usually derived from reactor primary coolant analysis(es). Alternatively, it may be determined from analyses of the continuous effluent itself.

In the event the concentration of radioactive material in the sample from the continuous release is below measurable levels (i.e., less than the lower limit of detection), the value

[h] Any suitable but identical units of flow (volume/time).

of 1 x 10^{-8} µCi/mL or the equivalent counting rate (cpm/mL) may be substituted for the factor

$$\frac{A}{FWEC_c} \text{ (i.e., } \frac{A}{FWEC_c} = 1 \bullet 10^{-8}\text{).}$$

2.5 Radioactivity Concentration in Water at the Restricted Area Boundary

Section 6.1.2 provides limits on instantaneous radioactivity concentration in the unrestricted area due to aqueous effluents from DAEC. Compliance is assessed by monitoring, sampling, analyzing and establishing setpoints according to Section 7.1.2. As long as a liquid effluent monitor named in Table 6.1-1 does not exceed an alarm or trip setpoint, determined in accordance with section 2.3 herein, or as long as the total or gross activity concentration, measured as required in Section 7.1.2, does not exceed 1 x 10^{-7} µCi/mL after dilution in the discharge canal, Section 6.1.2 is satisfied.

In the event of an alarm, indicating concentrations in the unrestricted area in excess of section 6.1.2 limits, the release shall be terminated and dose calculations will be performed to assure the limits specified in sections 6.1.3 and 6.3.1 are not exceeded.

Compliance with 10 CFR 20.1301 shall not be demonstrated on the basis of determining the average annual liquid effluent concentration. But rather by demonstrating compliance with 40 CFR 190 (i.e., section 6.3.1). Such a practice was deemed acceptable by the NRC in their preamble to the revised 10 CFR 20.[i]

2.6 Accumulated Personal Maximum Dose

Section 7.1.3 requires an assessment to be performed at least once every 31 days in any quarter in which radioactive effluent is discharged which determines whether the dose or dose commitment to a person offsite due to radioactive material released in liquid effluent calculated on a cumulative basis exceeds the limits of Section 6.1.3. The requirement is satisfied by computing the accumulated dose commitment to the most exposed organ and to the whole body of a hypothetical person exposed by eating fish or consuming irrigated strawberries and drinking water taken from the river offsite downstream of the discharge canal.

The pathway(s) and or age group(s) selected may vary by season. For instance, fishing near the DAEC is practically non-existent during the winter; thus, a dose evaluation of the fish pathway is not required for aqueous effluent discharged during the winter months of January, February, or March.

The accumulated dose commitment is computed at least once every 31 days but may be computed as analyses become available.

Normally, DAEC employs the MIDAS computer program to calculate dose to a member of the public from aqueous effluent that uses the equations in Reg Guide 1.109[j] and

[i] Federal Register Volume 56, #98, Tuesday, May 21, 1991, p. 23360

[j] USNRC, Regulatory Guide 1.109, revision 1, Position C.1, pp. 1.109-2 thru 1.109-4, Oct. 1977.

standard values therein for maximally exposed people. The amount of strawberries a person may eat is estimated to be one-half the amount of fresh leafy vegetable consumption. Alternatively, the amount of strawberries eaten may be assumed to equal the amount of fresh leafy vegetables eaten.

Alternatively, the dose may be calculated in the following way, for instance, in the event calculations by hand were necessary.

$$\Delta D_{ank} = 3.785 \bullet x\,10^{-3} \sum_{i} C_{ik} \bullet \Delta T_k \sum_{e} \frac{F1_k}{F2_{ek}} \bullet A_{eani}$$

$$D_{an} = \sum_{k} \Delta D_{ank}$$

where

ΔD_{ank} = the dose commitment (mrem) to organ *n* of age group *a* due to the isotopes identified in analysis *k*, where

the analyses are those required by Table 7.1-2. Thus the contribution to the dose from gamma emitters become available on a batch basis for batch releases and on a weekly basis for continuous releases. Similarly the contributions from H-3 is available on a monthly basis and the contributions from Fe-55, Sr-89, and Sr-90 become available on a quarterly basis.

D_{an} = the dose commitment during the quarter-to-date to organ *n*, including whole body, of the maximally exposed person in age group *a* (mrem)

A_{eani} = transfer factor relating a unit release of radionuclide *i* (Ci) in a unit stream flow (gal/min) to dose commitment to organ *n*, or whole body, of an exposed person in age group *a* $\left[\frac{mrem\ gal}{Ci\ \min}\right]$ via environmental pathway *e*.

C_{ik} = the concentration of radionuclide *i* in the undiluted liquid waste represented by sample *k* to be discharged (µCi/mL)

Δt_k = duration of radioactive release represented by sample *k* which occurs within time boundaries TB and TE and during which concentration C_{ik} and flows $F1_k$ and $F2_k$ exist. (min.)

$3.785 \bullet 10^{-3}$ = conversion constant (3785 mL/gal • 10^{-6} Ci/µCi)

$F1_k$ = flow in the radioactive waste release line (gal/min)[k] represented by sample k.

$F2_{ke}$ = flow into which radioactive release represented by sample k is mixed in the river at the point of exposure or withdrawal of water for use (same units as $F1_k$)*

= $M \times F_{ck}$

where

F_{ck} = discharge canal flow (gal/min)[k] during release represented by sample k

M = factor of additional mixing in the river

Pathway-to-dose transfer factors, A_{eani}, for use in calculating the dose commitment arising from radioactive material released in aqueous effluents are tabulated in Appendix C. These dose transfer factors were derived using LADTAP II and standard values from Regulatory Guide 1.109, revision 1, except where corrections have been incorporated in LADTAP II. Appropriate tables representing applicable environmental pathways of exposure and most exposed age group(s) are selected and used in calculating the dose commitment. The pathway(s) and/or age group(s) selected may vary by season.

For the purpose of calculating the dose to a Member of the Public who is potentially exposed by eating fish taken from the river offsite near the discharge canal, $F_2 = 5F_c$. The age group potentially the most exposed via eating fish is expected to be the adult. $F_2 = 5F_c$ is also used for the irrigated food pathway when the pathway exists.

The age group potentially the most exposed via drinking water taken from the Cedar River is expected to be the infant. As long as water is known not to be taken from the Cedar River within 3 miles downstream of the DAEC, for drinking water, as verified by the annual land use survey, the potential dose to a Member of the Public via drinking water will be assessed on the basis of water assumed to be taken from the river three miles downstream. At that location, F_2 is conservatively assumed to be $F_2 = 10F_c$. Variables F_1, F_2, and F_c are also defined in section 2.2.

2.7 Projected Maximum Dose to a Person Offsite

The dose commitment to a person offsite due to radioactive material released in liquid effluent may be projected by calculating the extrapolated whole body and most exposed organ dose commitments to a hypothetical person exposed via the same pathways evaluated in section 2.6. The potential dose commitments to organs and to the whole body are computed separately.

---

[k] Any suitable, identical units of flow (volume / time).

The dose commitment to a maximally exposed hypothetical person will be projected by calculating the doses accumulated during the most recent three months (according to the method described in section 2.6) and by assuming the result represents the projected doses during the current quarter. Alternatively, the quarterly dose commitment may be projected by using the equation:

$$P_{an} = \frac{92\ D_{an}}{X}$$

where

P_{an} = projected dose commitment (mrem) to organ *n* (including whole body) of age group *a* for the current quarter

92 = number of days in a quarter

X = number of days to date in current quarter

D_{an} = dose commitment to organ *n*, including whole body, of the maximally exposed person in age group *a* based on available aqueous effluent measurements during the quarter to date (mrem)

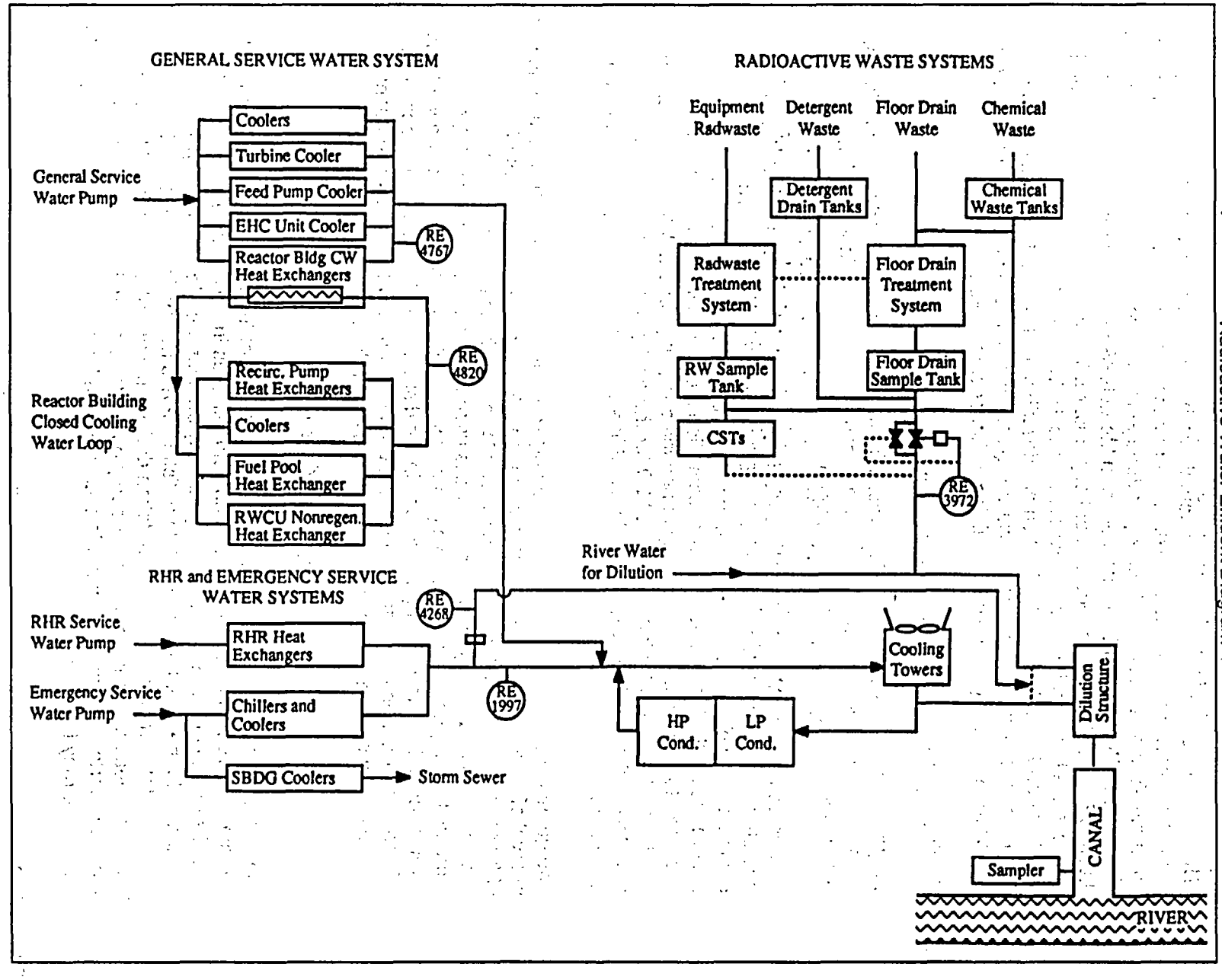

Figure 2-1
Duane Arnold Energy Center
Radioactive Water Effluent Diagram

3.0 GASEOUS EFFLUENT

3.1 Introduction

The Station discharges gaseous effluent through a stack and discharges ventilation air from the reactor and radwaste building through the reactor building vents. Ventilation air from the Turbine Building is discharged through the Turbine Building vent and through the Reactor Building vent. Ventilation from the LLRPSF is discharged through the LLRPSF vent. These gaseous effluent streams, radioactivity monitoring points, and effluent discharge points are shown schematically in Figure 3-1. Gaseous release point locations and elevations at the Station are described in Table 3-1. Gaseous discharges from the stack are treated as an elevated release while discharges via the building vents are assumed to be ground-level, building wake, or split wake releases.

3.2 Radioactivity in Gaseous Effluent

For the purpose of estimating offsite radionuclide concentrations and radiation doses, measured radionuclide concentrations in gaseous effluent and in ventilation air exhausted from the Station are relied upon.

The gross radioactivity of noble gases discharged is measured by the radioactive noble gas effluent monitors according to Tables 6.2-1 and 7.2-2. Radionuclides other than noble gases in gaseous effluents are measured by sampling and analyses in accordance with Table 7.2-2. Each radionuclide measured in an effluent may be assumed to be discharged uniformly during the sampling period. When radioactivity is identified at a concentration below the LLD for the analysis, that concentration is reported. When radioactivity is not identified in a sample, it is not reported as being present in that sample.

The quantity of radioactive noble gas discharged via the offgas stack or a vent during an interval of time is determined by integrating the release rate measurement of each effluent noble gas monitor. An hourly interval is normally used for dose rate assessments and a daily or longer interval is used for dose assessments. If DQ_j represents the gross activity of noble gas discharged via the offgas stack or a vent and g_i represents the fraction of radionuclide *i* in the distribution of radioactive gases in that effluent stream, then the quantity of radionuclide *i* released in the gaseous effluent stream during counting interval *j* is estimated by the relation:

$$\Delta Q_{ij} = \Delta Q_j \, x \, g_i$$

The distribution of radioactive noble gases in gaseous effluent streams is determined by gamma spectrum analysis of gaseous effluent samples in accordance with Table 7.2-2. Results of one or more previous analyses may be averaged to obtain a representative spectrum. In the event a representative distribution is not available or is unobtainable from sample(s) of an effluent stream taken during the current quarter, it will be derived from past measurements, e.g., earlier sample results or annual radioactive material release reports. Alternatively, a noble gas spectrum for a given effluent stream in Table 3-2 herein, may be assumed.

An airborne discharge of radionuclides other than noble gases may be represented by multiple samples with each sample providing a measure of the concentration of specific radionuclides, C_i, in gaseous effluent discharged at flow, F_a, during a time increment Δt. Thus, each release is quantified according to the relation:

$$Q_{ik} = \sum_j C_{ik} \; F_{aj} \; \Delta t_j$$

where

Q_{ik} = the quantity of radionuclide *i* released in a given effluent stream based on analysis *k* (Ci)

C_{ik} = concentration of radionuclide *i* in gaseous effluent identified by analysis *k* (µCi/mL or Ci/m^3)

F_{aj} = effluent stream discharge rate during the increment Dt_j (m^3/sec)

Δt_j = time increment during which radionuclide *i* at concentration C_{ik} is being discharged (sec)

The analysis index *k* may represent either a grab sample, integrated sample, or a composite sample required by the effluent sampling and analysis program specified in Table 7.2-2.

3.3 Main Condenser Offgas Pretreatment Monitor Alarm Setpoint

A noble gas activity monitor is provided to measure gross gamma activity in gases from the main condenser air ejector. The pretreatment monitor includes an alarm that is set to report when the gamma radiation level in gas discharged by the main condenser air ejector indicates the gross radioactivity discharge rate, after 30 minutes delay and decay, exceeds 1 Ci/sec. The alarm setpoint is determined with the relation:

$$S = \frac{2120\,g}{F \sum_i f_i e^{-\lambda_i t}} + BKG$$

where

S = main condenser air ejector noble gas monitor alarm setpoint (cpm) or (mR/hr)

2120 = [(1.0 E6 µCi/sec) · (1 ft^3/28317 cm^3)] · 60 sec/min

F = air ejector discharge rate (ft^3/min)

g = noble gas monitor calibration or counting rate response for gamma radiation

$$\left(\frac{cpm}{\mu Ci / cm^3}\right) \quad or \quad \left(\frac{mR / hr}{\mu Ci / cm^3}\right)$$

f_i = fraction of noble gas gross activity due to noble gas radionuclide *i* in a representative spectrum of noble gases at the main condenser offgas detector

λ_i = radioactive decay constant of noble gas nuclide *i* (min^{-1})

t = 30 min; decay time in delay line

3.4 Effluent Noble Gas Monitor Alarm Setpoint

Section 6.2.2 provides limits on dose equivalent rates associated with airborne radioactive materials concentrations in the unrestricted area due to airborne effluents from the Station. Instrumentation is provided to monitor gamma radiation in the airborne effluents according to Table 6.2-1. Each effluent noble gas monitor includes an alarm that can be set to activate when the dose rate off site or the noble gas concentration at ground level offsite is expected (calculated) to exceed a specified level. Compliance with the limits on dose rate from noble gases is demonstrated by setting each gaseous effluent monitor alarm setpoint so that an alarm will occur at or before the dose rate limit for noble gases is reached. If an alarm occurs with the setpoint at the limit, compliance with Section 6.2.2.1 is assessed as described in section 3.5.

On the basis of effluent noble gases from the DAEC during recent years, the gamma dose rate to a person's whole body is expected to be a larger fraction of the limit, 500 mrem/yr, than is the beta plus gamma dose rate to skin is to its limit, 3000 mrem/yr. In which case, a gaseous effluent monitor setpoint may be derived on the basis of the gamma dose rate to a person's whole body alone such that an alarm is set to occur at or before the whole body dose rate offsite exceeds 500 mrem/yr.

A noble gas monitor may be set to activate an alarm at a lower setting than the derived setpoint corresponding to the dose rate limit (or corresponding concentration limit). In the event an alarm occurs at the lower setting, the monitor record is compared with the derived setpoint. If the derived setpoint is exceeded, compliance with Section 6.2.2.1 is assessed as described in section 3.5.

Each radioactive noble gas effluent monitor setpoint is derived on the basis of whole body dose equivalent rate in the unrestricted area. Setpoints for gaseous effluent monitors may be set independently because excessive effluent release via the turbine building vent is unlikely. Other releases are likely to be initiated independently and released from different levels, i.e., vent and stack releases with points of maximum concentration offsite not likely to coincide.

For the purpose of deriving a setpoint, the distribution of radioactive noble gases in an effluent stream is determined as described in section 3.2.

<u>Setpoint Determination</u>

The alarm setpoint of a radioactive noble gas effluent monitor may be calculated on the basis of whole body dose equivalent rate offsite, 500 mrem/yr. A setpoint of a monitor of an elevated release, e.g., from the stack, may be calculated with the equation:

$$S = \left[1.06 \bullet \frac{h}{f} \bullet \frac{\sum_i C_i}{\sum_i C_i \times DF_i^{\gamma}} \right] + Bkg$$

The setpoint of a monitor of a ground-level or building release, e.g., from the turbine building vent or 3 reactor building vents or LLRPSF vent may be calculated with the equation:

$$S = \left[1.06 \bullet \frac{h}{f\left(\frac{\chi}{Q}\right)} \frac{\sum_i C_i}{\sum_i C_i \bullet DF_i^v} \right] + Bkg$$

where

s = the alarm setpoint (cpm) or (mR/hr)

h = monitor response to activity concentration of effluent being monitored,

$$\left(\frac{cpm}{\mu Ci / cm^3}\right) \quad or \quad \left(\frac{mR / hr}{\mu Ci / cm^3}\right)$$

C_i = relative concentration of noble gas radionuclide *i* in effluent at the point of monitoring (μCi/cm^3)

χ / Q = atmospheric dispersion from point of ground-level or building wake release to the location of potential exposure (sec/m^3)

DF_i^s = factor converting elevated release rate of radionuclide *i* to whole body dose equivalent rate at the location of potential exposure

$$\left(\frac{mrem}{yr \bullet \frac{\mu Ci}{\sec}}\right)$$

DF_i^v = factor converting ground-level of split-wake release of radionuclide *i* to the whole body dose equivalent rate at the location of potential exposure

$$\left(\frac{mrem}{yr \bullet \frac{\mu Ci}{m^3}}\right)$$

f = flow of gaseous effluent stream, i.e., flow past the monitor (ft^3/min)

Bkg = monitoring instrument background (cpm) or (mR/hr)

$$1.06 = 500\frac{mrem}{yr} \bullet 60\frac{\sec}{\min} \bullet 35.3\frac{ft^3}{m^3} \bullet \frac{1\,m^3}{10^6\,cm^3}$$

Each monitoring channel has a unique response, *h*, which is determined by the instrument calibration.

The concentration of each noble gas radionuclide, C_i, in a gaseous effluent is determined as discussed earlier in this section.

Since the dose rate limits for airborne effluents apply everywhere offsite, alarm setpoints are determined and compliance is assessed at the site boundary where the minimum atmospheric dispersion (maximum χ / Q) occurs. The atmospheric dispersion factor and the dose conversion factor DF_i^s depend on local conditions. The value of χ / Q adopted in a setpoint calculation will be based either on prevailing meteorological conditions or on reference meteorological conditions at the DAEC. The minimum atmospheric dispersion offsite from a ground-level or building wake release derived from reference meteorological conditions is at the site boundary 1260 meters NNW of the Station where:

$$\left(\frac{\chi}{Q}\right)_{vent} = 4.3 \bullet 10^{-6}\,\sec / m^3$$

The dose conversion factors, DF_i^s, used in setpoint calculations for gaseous effluent monitors are in Table 3-4. In the event DF_i^s is derived on the basis of prevailing meteorology, it will be calculated in accordance with Regulatory Guide 1.109, Appendix B.

3.5 Dose Equivalent Rate Offsite

Section 6.2.2 provides limits on dose equivalent rates associated with airborne radioactive materials concentrations in the unrestricted area due to airborne effluents from the Station. Compliance is assessed on the basis of measurements specified in Table 7.2-2.

3.5.1 Noble Gas

Limits on radioactive noble gas in the unrestricted area are provided in Section 6.2.2.1. Each radioactive noble gas effluent monitor is set to alarm when, or below when, the noble gas in airborne effluent from a monitored stack or vent is expected to cause either dose rate limit in Section 6.2.2.1 to be exceeded. In the event an airborne effluent release from the Station exceeds the derived setpoint (limit) for an effluent noble gas monitor (except when caused by the performance of a Surveillance Test Procedure), an assessment of compliance is performed as described herein.

The quantity of radioactive noble gas released in a increment of time is measured by the radioactive noble gas effluent monitors and the distribution of radioactive noble gases in a gaseous effluent stream is determined as described in section 3.2 herein.

Compliance with Section 6.2.2.1 may be assessed by calculating the dose equivalent rate as described hereafter and by comparing it with the limiting dose rate in the Specification.

3.5.1.1 Total Body Dose Rate

For evaluating compliance with Effluent Control, Section 6.2.2.1, the total body dose equivalent rate due to noble gas gamma radiation is calculated with the equation:

$$\bar{D}_\gamma = \frac{1}{3600}\left[\sum_i\left(\frac{Qg_i}{t}\bullet DF_i^s\right)_s + \sum_v\sum_i\left(\frac{Qg_i}{t}\bullet\left(\frac{\chi}{Q}\right)\bullet DF_i^v\right)_v\right]$$

where

$\bar{D}_\gamma$ = noble gas gamma dose rate to total body (mrem/yr)

Qg_i/t = quantity of noble gas radionuclide *i* discharged (µCi) during time increment *t* (yr)

DF_i^s = factor converting unit noble gas nuclide *i* stack release to total body dose at ground level received from the overhead plume

$$\left[\frac{mrem}{(\mu Ci\ yr)/\sec}\right]$$

DF_i^γ = factor converting time integrated, ground level concentration of noble gas nuclide i to total body dose from gamma dose from gamma radiation $\left(\frac{mrem}{\mu Ci\ yr / m^3}\right)$

$\frac{1}{3600}$ = conversion (hr/sec)

Dose factor DF_i^s, for exposure to noble gases released from an elevated stack are calculated by a finite plume model implemented in the MIDAS program.[a] It assumes decay of short-lived nuclides, an air dose-to-tissue dose conversion of 1.11, and that the dose to internal organs is equivalent to the tissue dose. In this model, meteorological data concurrent with the period of release are used to evaluate the dose rate.

The dose from noble gases released from a vent (near ground level) or to skin from an elevated release is derived from a semi-infinite cloud model. Noble gas semi-infinite cloud gamma-to-total body dose factors, DF_i^γ, are listed in Table 3-4.

When the total body and organ doses from noble gases are computed as required by Section 7.3.1, the nearby resident exposed to the maximal ground-level noble gas concentration (maximum χ/Q) is selected as the receptor.

Alternatively, the dose from noble gases may be computed at 1260 meters NNW of the reactor, a location identified in Figure 3-2, where the nearby resident who may be exposed to maximal ground-level noble gas concentrations (maximum χ/Q) is selected as the receptor.[c] In that case, values of the dose factors DF_i^s and DF_i^γ in Table 3-4 are employed.[b] Total body dose factors for exposure from a plume from an elevated, stack release, DF_i^s, in Table 3-4 were computed with the aid of an NRC code, RABFIN. In those computations, reference meteorology was assumed as the basis of atmospheric dispersion. For discharge from a vent, reference meteorological dispersion at the 1260 m NNW, $(\chi/Q)_v$, is 4.3 x 10^{-6} sec/m^3.

3.5.1.2 Skin Dose Rate

The skin dose equivalent rate due to radioactive noble gas is calculated with the equation:

---

[a] David Slade, ed., Meteorology and Atomic Energy 1968, TID-24190,pp. 350-355.

[b] Dose transfer factors DF_i^γ in Table 3.4 are a units conversion of values in Regulatory Guide 1.109, Table B-1, column 5.

[c] Due to limitations of the Midas© software used to perform these calculations, a conservative higher calculated dose may be reported. When using Annualized Average Meteorological data, the Midas system uses known X/Q values from the 1 mile radius to extrapolate X/Q values at the site boundary. The resulting maximum site boundary X/Q value is greater than 4.3 x 10^{-6} sec/m^3 and is located on the site boundary toward the SSE.

$$\bar{D}_\beta = \frac{1}{3600}\left[\sum_i S_{\beta i}\left(\frac{Q_i}{t}\bullet\left(\frac{\chi}{Q}\right)\right)_s + \sum_v\sum_i S_{\beta i}\left(\frac{Q_i}{t}\bullet\left(\frac{\chi}{Q}\right)\right)_v\right]$$

where

$\bar{D}_\beta$ = noble gas beta dose rate to skin (mrem/yr)

$\frac{Q_i}{t}$ = quantity of noble gas radionuclide *i* (µCi) discharged during time increment *t* (hr)

$S_{\beta i}$ = factor converting time integrated ground level concentration of noble gas to skin dose from beta radiation $\left[\frac{mrem\ m3}{\mu Ci\ yr}\right]$

$\frac{1}{3600}$ = conversion (hr/sec)

Compliance with Section 6.2.2.1 dose rate to skin is evaluated by calculating the noble gas beta dose equivalent rate offsite at a location 1260 meters NNW of the Station, which is also identified in Figure 3-2.[d] At that location, the reference atmospheric dispersion factors to be used in the calculations are:

$$\left(\frac{\chi}{Q}\right)_v = 4.3\bullet 10^{-6}\,\mathrm{sec}/m^3 \quad and \quad \left(\frac{\chi}{Q}\right)_s = 2.8\bullet 10^{-7}\,\mathrm{sec}/m^3$$

Alternatively, averaged meteorological dispersion data coincident with the period of release may be used to evaluate the dose rate. The semi-infinite noble gas cloud-to-skin dose equivalent factors are in Table 3-4. They are also derived from Regulatory Guide 1.109, Table B-1.

[d] Due to limitations of the Midas© software used to perform these calculations, a conservative higher calculated dose may be reported. When using Annualized Average Meteorological data, the Midas system uses known X/Q values from the 1 mile radius to extrapolate X/Q values at the site boundary. The resulting maximum site boundary X/Q value is greater than 4.3 x 10^{-6} sec/m^3 and is located on the site boundary toward the SSE.

3.5.2 Iodine, Tritium, and Particulates

Section 6.2.2.2 provides a limit on iodine-131, iodine-133, H-3, and on radioactive particulates having 8 day or longer half-lives in air in the unrestricted area around the Station. In the event airborne effluent from the Station causes a radioactive noble gas effluent monitor to alarm (except when alarm is due to the performance of a Surveillance Test Procedure) or if the assessment required by Section 7.2.4 shows Section 6.2.4 to have been exceeded, an assessment of compliance with Section 6.2.2.2 will be performed using a method described in this section.

3.5.2.1 Organ Dose Rate[ce]

Compliance with Section 6.2.2.2 is assessed by calculating the dose rate[e] to the most exposed organ of an assumed adult member of the public inhaling airborne I-131, I-133, H-3, and inhaling radioactive particulates having half-lives of 8 days or longer at the location in the unrestricted area having the maximum potential concentration of the effluents (i.e., the location at which reference meteorological data indicates minimum atmospheric dispersion from the Station (max χ / Q).

The organ dose rate is calculated with the following equations:

For a vent discharge:

$$\overline{D}_{anv} = \frac{8.766E-3}{TE-TB} \sum_i \sum_k Q_{ikv}\, TA_{ani} \left(\frac{\chi_i}{Q}\right)_v$$

For an offgas stack discharge:

$$\overline{D}_{ans} = \frac{8.766E-3}{TE-TB} \sum_i \sum_k Q_{iks}\, TA_{ani} \left(\frac{\chi_i}{Q}\right)_s$$

Combining separate release points gives

$$\overline{D}_{an} = \overline{D}_{ans} + \sum_v \overline{D}_{anv}$$

where

$\overline{D}_{an}$ = the dose equivalent rate to organ *n* of a person in age group *a* due to radionuclides discharged in airborne effluents during time interval TB to TE (mrem/yr)

$\overline{D}_{ans}$ = dose equivalent rate from a stack discharge (mrem/yr)

$\overline{D}_{anv}$ = dose equivalent rate from a vent discharge (mrem/yr)

Q_{iks}, Q_{ikv} = quantity of radionuclide *i* released in a given effluent stream based on analysis *k* (μCi) during discharged time increment TB to TE (hr) of interest

---

[e]For inhaled or ingested radioactive material, the consequent "dose" means the committed dose equivalent. The "dose rate" is the committed dose equivalent per unit of time of exposure to the radioactive material in the environment.

TA_{ani} = factor converting airborne concentration of radionuclide *i* to dose commitment to organ *n* of a person in age group *a* where exposure is directly to airborne material

$$\left(\frac{mrem}{(Ci\sec)/m3}\right)$$

$\left(\frac{\chi_i}{Q}\right)_s, \left(\frac{\chi_i}{Q}\right)_v$ = atmospheric dispersion from stack and vent, respectively, to ground level at location of interest (sec/m^3)

$8.766E-3$ = Conversion (1 Ci/1E6 µCi)(8766 hr/yr)

Radionuclides other than noble gases airborne effluent are measured and quantified as described in section 3.2. Normally, radioactive material measured in effluent is assumed to be discharged uniformly over the period represented by the sample.

The averaging time of the measured releases used to evaluate compliance will not exceed 92 days for Sr-89 and Sr-90 and will not exceed 31 days for the other radionuclides.

The maximum offsite exposure potential is expected to occur at 1260 meters NNW of the Station where the reference atmospheric dispersion, to be used in the calculation is

$\left(\frac{\chi}{Q}\right)_v$ = $4.3 \bullet 10^{-6}$ sec/m^3 and

$\left(\frac{\chi}{Q}\right)_s$ = $2.8 \bullet 10^{-7}$ sec/m^3

Currently, compliance with Section 6.2.2.2 is evaluated by calculating an adult inhalation dose rate at 1260 meters NNW of the Station[f]. The dose transfer factors, TA_{ani}, used in the computation are tabulated in Appendix A.

3.6 Noble Gas Gamma Radiation Dose Accumulated in Air

Section 6.2.3 requires that the offsite air dose during any calendar quarter not exceed 5 mrad and the annual air dose not exceed 10 mrad from noble gas gamma radiation. Section 7.2.3.1 requires a monthly calculational assessment to verify that the cumulative air dose due to gamma radiation from radioactive noble gas released in gaseous effluents during the quarter and year do not exceed Section 6.2.3.

[f]Due to limitations of the Midas© software used to perform these calculations, a conservative higher calculated dose may be reported. When using Annualized Average Meteorological data, the Midas system uses known X/Q values from the 1 mile radius to extrapolate X/Q values at the site boundary. The resulting maximum site boundary X/Q value is greater than 4.3×10^{-6} sec/m^3 and is located on the site boundary toward the SSE.

The distribution of radioactive noble gases in gaseous releases and the quantity of radioactive noble gas discharged during an interval of time are determined as described in section 3.2 herein.

The gamma radiation dose to air offsite as a consequence of noble gas discharge from DAEC is calculated with the

$$D_\gamma = \sum_i \sum_j \left(\Delta Q_j \bullet g_i \bullet A\gamma_i^s \right) + \sum_v \sum_i \left(A\gamma_i^v \sum_j \Delta Q_j \bullet gi \bullet \left(\frac{\chi}{Q} \right)_v \right)$$

where

D_γ = noble gas gamma dose to air due to effluent from stack and vent (mrad)

ΔQ_j = total measured radioactivity release via stack or vent measured by noble gas effluent monitor during counting interval *j* (µCi)

g_i = the fraction of radioactive gas in a given effluent stream attributable to noble gas radionuclide *i*.

$A\gamma_i^s$ = factor converting unit release of noble gas radionuclide *i* from the stack to air dose at ground-level received from gamma radiation from the overhead plume (mrad/µCi)

$A\gamma_i^v$ = factor converting time integrated, ground-level concentration of noble gas to air dose from gamma radiation

$$\left(\frac{mrad}{(\mu Ci \sec)/m^3} \right)$$

$\left(\frac{\chi}{Q} \right)_v$ = atmospheric dispersion factor for a vent (ground-level or building wake) discharge (sec/m^3)

Section 7.2.3.1 is satisfied by calculating the noble gas gamma radiation dose to air at the offsite location identified in Figure 3-2. At that location, 1260 meters NNW of the Station[h], the reference[g] atmospheric dispersion factor to be used is

$$\left(\frac{\chi}{Q} \right)_v = 4.3 \bullet 10^{-6} \sec / m^3$$

Values of $A\gamma^s$ and $A\gamma^v$ appropriate for use at that location, assuming reference meteorological conditions, are listed in Table 3-3. An NRC code, RABFIN, modified for sector width averaged meteorology was used to calculate the air dose transfer factors,

---

[h]Reference atmospheric conditions are summarized and discussed in "Duane Arnold Energy Center, Evaluation of Liquid and Gaseous Effluent Releases in Accordance with 10 CFR 50 Appendix I," submitted to NRC June 3, 1976, Reference atmospheric dispersion factors tabulated therein, also appear in Appendix B herein.

[g] Due to limitations of the Midas© software used to perform these calculations, a conservative higher calculated dose may be reported. When using Annualized Average Meteorological data, the Midas system uses known X/Q values from the 1 mile radius to extrapolate X/Q values at the site boundary. The resulting maximum site boundary X/Q value is greater than 4.3 x 10^{-6} sec/m^3 and is located on the site boundary toward the SSE.

$A\gamma_i^s$ for a stack discharge, in ODAM Table 3-3. They represent air dose at ground level 1260 meters NNW of the station from a unit release of each radionuclide *i* from the stack.

Dose transfer factors for vent discharges, $A\gamma_i^v$, are equivalent to factors in Regulatory Guide 1.109, Table B-1, g-air expressed in different units.

3.6.1 Alternate Method of Evaluating Compliance with Gamma Air Dose Limits

Alternatively, the gamma radiation dose to air offsite may be calculated with the equation

$$D_\gamma = \frac{1}{0.8}\sum_j \left(\Delta Q_j \bullet A_{\gamma_{seff}}\right)_s + \frac{1}{0.8}\sum_v \sum_j \left(\Delta Q_j \bullet \left(\frac{\chi}{Q}\right) \bullet A_{\gamma_{veff}}\right)_v$$

where

$A_{\gamma_{seff}}$ = an effective dose conversion factor based on the typical radionuclide distribution in stack releases converting unit release of radioactive noble gases from the stack to air dose at ground level at a specific location (mrad/µCi).

$A_{\gamma_{veff}}$ = an effective dose conversion factor based on the typical radioactive distribution in vent releases converting a time integrated, ground level concentration of noble gases to air dose from gamma radiation $\left(\frac{mrad}{(\mu Ci\ sec/m^3)}\right)$

0.8 = a factor of conservatism which compensates for variability in radionuclide distribution

The derivation and basis of the effective gamma air dose conversion factor are provided in Appendix B. Values of the effective factors are tabulated in Table 3-3. By inserting the appropriate values for $D\gamma$ (5 mrad/quarter γ-air dose) and for $A\gamma_{seff}$ (1.6×10^{-11} mrad/µCi) or Ag_{veff} (6.4×10^{-5} mrad/(µCi sec/m^3)) into the equation above and solving for either $(\Delta Q_j)s$ or $(\Delta Q_j)v$, respectively, release quantities of noble gases from either the stack or vent corresponding to the technical specification limit of 5 mrad/quarter (total for all release points) may be determined. The limit of 5 mrad/quarter is described in section 6.2.3 and is for the total of all release points. At the location, 1260 meters NNW of the station, (which is the controlling location based on reference meteorology) the release limits are individually

Release Point	Quarterly Limit (Ci)	Annual Limit (Ci)
Stack	2.5×10^5	5.0×10^5
Vent	1.25×10^4	2.5×10^4

The following equations may be used to assess both the stack and vent discharges for compliance with the quarterly release limits on noble gas gamma dose to air.

$$\frac{\sum_j (\Delta Q_j)_s}{250{,}000} + \frac{\sum_v \sum_j (\Delta Q_j)_v}{12{,}500} \leq 1$$

or, on a monthly rate basis (although not a requirement)

$$\frac{\sum_j (\Delta Q_j)_s}{250{,}000} + \frac{\sum_v \sum_j (\Delta Q_j)_v}{12{,}500} \leq \frac{1}{3}$$

The equations which may be used to assess both the stack and vent discharges for compliance with the annual air dose limits from noble gas are:

$$\frac{\sum_j (\Delta Q_j)_s}{500{,}000} + \frac{\sum_v \sum_j (\Delta Q_j)_v}{25{,}000} \leq 1$$

or, on a monthly rate basis (although not a requirement)

$$\frac{\sum_j (\Delta Q_j)_s}{500{,}000} + \frac{\sum_v \sum_j (\Delta Q_j)_v}{25{,}000} \leq \frac{1}{12}$$

As long as these relations are satisfied for both stack and vent releases of noble gases, no additional calculations are needed to verify compliance with the gamma-air dose limits of Section 6.2.3. Calculations of beta air doses per Section 3.6 may be omitted as discussed in Appendix B.

3.7 Noble Gas Beta Radiation Dose Accumulated in Air

Section 6.2.3 requires that the offsite air dose during any calendar quarter not exceed 10 mrad from noble gas beta radiation and not exceed 20 mrad during any calendar year. Section 7.2.3.1 requires a monthly assessment to verify that the cumulative air dose due to beta radiation from radioactive noble gas released in gaseous effluents not exceed either limit of Section 6.2.3.

The radioactive noble gas distribution and activity discharged are determined as described in paragraph 3.6 herein.

The beta radiation dose to air offsite as a consequence of noble gas released from the Station is calculated with the equation:

$$D\beta = \sum_i A\beta_i \left[\Delta Q_j g_i \frac{\chi}{Q} \right]_s + \sum_v \sum_i A\beta_i \sum_j \left[\Delta Q_j g_i \frac{\chi}{Q} \right]_v$$

where

D_β = noble gas beta dose to air due to stack and vent releases (mrad)

A_{β_i} = factor converting time-integrated, ground-level concentration of noble gas radionuclide *i* to air dose from beta radiation $\left(\frac{mrad - m^3}{\mu Ci - sec} \right)$

$\left(\frac{\chi}{Q} \right)_s$ = atmospheric dispersion factor for a discharge via the stack (sec/m^3)

$\left(\frac{\chi}{Q} \right)_v$ = atmospheric dispersion factor for a vent (ground level or building wake) discharge (sec/m^3).

Specification 7.2.3.1 is satisfied by calculating the noble gas beta radiation dose to air at the location identified on Figure 3-2. At that location, 1260 meters NNW of the reactor[a], the reference atmospheric dispersion factors to be used are

$\left(\frac{\chi}{Q} \right)_s$ = 2.8×10^{-7}

$\left(\frac{\chi}{Q} \right)_v$ = 4.3×10^{-6}

Beta radiation-to-air dose conversion factors, $A_{\beta i}$, for noble gas radionuclides are listed in Table 3-3.

[a]Due to limitations of the Midas© software used to perform these calculations, a conservative higher calculated dose may be reported. When using Annualized Average Meteorological data, the Midas system uses known X/Q values from the 1 mile radius to extrapolate X/Q values at the site boundary. The resulting maximum site boundary X/Q value is greater than 4.3×10^{-6} sec/m^3 and is located on the site boundary toward the SSE.

3.8 Dose Due to Iodine and Particulates in Gaseous Effluents[b]

Section 6.2.4 requires that I-131, I-133, H-3, and radioactive material in particulate form having half-lives greater than 8 days in gaseous effluents released to the area offsite cause no more than 7.5 mrem to any organ of a member of the public during a calendar quarter and no more than 15 mrem during any calendar year. Section 7.2.4 requires an assessment at least once every month to verify that the cumulative dose commitment does not exceed either limit of Section 6.2.4.

Airborne releases are discharged either via the offgas stack as an elevated release or via building vents and treated as a ground-level, building wake, or split wake release. Radionuclides mentioned above in airborne effluents that are measured by the sampling and analysis schedule in Table 7.2-2 are included in the release term used to calculate doses. Section 3.2 describes the quantification of these radionuclides other than noble gases.

A person may be exposed directly to an airborne concentration of radioactive material discharged in effluent and indirectly via pathways involving deposition of radioactive material onto the ground. Dose estimates account for the separate exposure pathways. The dose commitment to a person offsite associated with a gaseous release, Q_{ik}, of radioactive material other than noble gas is calculated with the appropriate one(s) of the following equations

for a stack release:

$$D_{anske} = \sum_i Q_{iks} \left[TA_{anie} \left(\frac{\chi}{Q}\right)_s + TG_{anie} \left(\frac{D}{Q}\right)_s \right]$$

for a vent release:

$$D_{anvke} = \sum_i Q_{ikv} \left[TA_{anie} \left(\frac{\chi}{Q}\right)_v + TG_{anie} \left(\frac{D}{Q}\right)_v \right]$$

where

D_{anske} = the dose commitment (mrem) to organ *n* of a person in age group *a* via exposure pathway *e* due to radionuclides identified in analysis *k* of a stack release where the analysis is required by Table 7.2-2.

D_{anvke} = the dose commitment via pathway *e* from a vent release (mrem)

[b] The dose to any organ of a person arising from radioactive iodine-131, iodine-133, tritium, and radioactive material in particulate form having half-lives greater than 8 days. Noble gases not considered.

TA_{anie} = factor converting airborne concentration of radionuclide *i* to dose commitment to organ *n* of a person in any group *a* where exposure is directly to airborne material via exposure pathway *e*.

$$\left(\frac{mrem}{(Ci\ \sec)/m^3}\right)$$

TG_{anie} = factor converting ground deposition of radionuclide *i* to dose commitment organ *n* of a person in age group *a* where exposure is directly or indirectly to radioactive material that has been deposited on the ground via exposure pathway *e*. $\left(\frac{mrem}{Ci/m^2}\right)$

Q_{ik} = quantity of radionuclide *i* released in a given effluent stream based on analysis *k* (Ci)

$\left(\frac{D}{Q}\right)_s, \left(\frac{D}{Q}\right)_v$ = relative deposition factor, i.e., factor converting airborne effluent discharge from stack or vent respectively, to a real deposition on land (m^{-2}).

The analysis index *k* may represent either an analysis of a grab sample, a weekly composite analysis, a monthly composite analysis, or a quarterly composite analysis.

Since tritium in water vapor is absorbed directly by vegetation, the tritium concentration in growing vegetation is proportional to the airborne concentration rather than to relative deposition as in the case of particulates. Thus the dose commitment from airborne tritium via vegetation (fruit and vegetables), air-grass-cow-milk, or air-grass-cow-meat pathways is calculated with the appropriate one(s) of the equations:

for a stack release

$$D_{anse} = \left(\frac{\chi}{Q}\right)_s \sum_i \sum_k Q_{iks}\ TA_{anie}$$

for a vent release

$$D_{anve} = \left(\frac{\chi}{Q}\right)_v \sum_i \sum_k Q_{ikv}\ TA_{anie}$$

The dose commitment accumulated by a person offsite is computed at least every 30 days to satisfy Section 7.2.4.1 but may be calculated as analytical results of effluent measurements, performed as specified in Table 7.2-2, become available.

The dose accumulated as a result of stack discharge is computed with

$$D_{ans} = \sum_{e} D_{anse}$$

and the dose accumulated as a result of vent discharge is computed with

$$D_{anv} = \sum_{e} D_{anve}$$

Doses committed during the same time period due to discharges from the stack and vents are additive, thus

$$D_{an} = D_{ans} + \sum_{v} D_{anv}$$

where

D_{an} = the dose commitment accumulated during the quarter to date as a result of all measured radioactive gaseous discharges except noble gases to any organ *n*, including total body, of a person offsite in age group *a* (mrem).

When the dose to a person from iodine and particulates discharged in gaseous effluents is calculated as required by Section 7.2.4, appropriate environmental pathways (from among those for which dose transfer factors are provided in Appendix A) will be evaluated. The dose calculated is to a receptor at the location of the nearby residence experiencing the minimum atmospheric dispersion at ground-level from the station, i.e., maximum $\frac{X}{Q}$, concurrent with the effluent discharge. Alternatively, the dose may be calculated to a receptor at the location identified in Figure 3-2 where reference atmospheric dispersion and deposition factors are:

$$\left(\frac{\chi}{Q}\right)_s = 3.1 \bullet 10^{-7}\ \text{sec}/m^3 \quad \left(\frac{D}{Q}\right)_s = 7.2 \bullet 10^{-9}\ m^{-2}$$

$$\left(\frac{\chi}{Q}\right)_v = 3.9 \bullet 10^{-6}\ \text{sec}/m^3 \quad \left(\frac{D}{Q}\right)_v = 1.3 \bullet 10^{-8}\ m^{-2}$$

Food pathways are evaluated at the location of food production based on minimum atmospheric dispersion at ground-level concurrent with the effluent discharge or, alternatively, with reference meteorology applicable at that location. Seasonal appropriateness of pathways is considered. The air-grass (fresh or stored)-cow-milk-man pathway is evaluated** where a cow is located, 2650 meters WNW of DAEC, reference atmospheric deposition factors are:

$$\left(\frac{D}{Q}\right)_s = 2.1 \bullet 10^{-9}\ m^{-2} \quad \left(\frac{D}{Q}\right)_v = 4.28 \bullet 10^{-9}\ m^{-2}$$

**This receptor is historical in nature. See the current land use census to verify this point as the most conservative receptor location for the pathway.

3.8.1 Alternate Method of Evaluating Doses Due to Iodine and Particulates in Gaseous Effluents

Alternatively, the dose commitment to a maximally exposed, hypothetical individual may be calculated by the equation

$$D_{inf\text{-}thy} = \frac{1}{0.8} \bullet \sum_i \left[Q_i \bullet TG_{inf\text{-}thy\text{-}I\text{-}131} \bullet (D/Q) \right]_i$$

$$= \frac{1}{0.8} \bullet \sum_i \left[Q_i \bullet TG_{inf\text{-}thy\text{-}I\text{-}131} \bullet (D/Q) \right]_i$$

where:

$D_{inf\text{-}thy}$ = the dose commitment accumulated during the quarter to date to a hypothetical infant's thyroid as a result of the releases of I-131 (mrem)

Q_i = the measured quantity of I-131 released in a given effluent stream, stack or vent (Ci)

$TG_{inf\text{-}thy\text{-}I\text{-}131}$ = the dose transfer factor for the infant thyroid from the cow-milk pathway *f* or I-131 measured in the effluent stream $\left(\frac{mrem}{Ci/m^2}\right)$

$\frac{1}{0.8}$ = a factor of conservatism which accounts for the dose contribution for releases of particulate radioactive material other than I-131

When the maximum organ dose is evaluated by using the equation above, analyses of other organ doses via other pathways are not needed to demonstrate compliance within the dose limits of Section 6.2.4.

The rationale for only evaluating the dose contribution of I-131 is derived from an evaluation of the radioactive material releases and the environmental pathways. The air-grass-cow-milk-man pathway is by far the controlling pathway and the infant's thyroid is the limiting organ. This pathway typically contributes greater than 90% of the total calculated dose to the infant's thyroid and I-131 contributes essentially all of the dose (~95%). Therefore, it is possible to demonstrate compliance with the dose limits of Section 6.2.4 by the conservative calculational method presented above.

3.9 Dose to a Person from Noble Gases

Section 7.3.1 requires the calculation of the dose or dose commitment to a person offsite exposed to 12 consecutive months of radioactive liquid and gaseous effluents from the Station. One component of personal dose is total body irradiation by gamma rays from noble gases. Another is irradiation of skin by beta and gamma radiation from noble gases. The methods of calculating these doses are presented in sections 3.9.1 and 3.9.2.

The amount of radioactive noble gas discharged is determined in the manner described in section 3.2.

3.9.1 Gamma Dose to Total Body

The gamma radiation dose to the whole body of a member of the public as a consequence of noble gas released from the Station is calculated with the equation:

$$D\gamma_i = \sum_i \left(Q_i \bullet P\gamma_i^s\right)_s + \sum_v \sum_i \left(Q_i \bullet \left(\frac{\chi}{Q}\right) \bullet P\gamma_i^v\right)_v$$

where:

D_γ = noble gas gamma dose to total body (mrem)

Q_i = quantity of noble gas nuclide *i* released via stack or vent (Ci)

$P\gamma_i^s$ = factor converting unit noble gas nuclide *i* stack release to total body dose at ground level received from the overhead plume (mrem/Ci)

$P\gamma_i^v$ = factor converting time integrated, ground level concentration of noble gas nuclide *i* to total body dose from gamma radiation $\left(\frac{mrem}{Ci\ \sec/m^3}\right)$

The dose to total body and organs other than skin from noble gases released from an elevated stack are calculated by a finite plume model.[a] It assumes decay of short-lived nuclides, a residential shielding factor of 0.7, an air dose-to-tissue dose conversion of 1.11, and that the dose to internal organs is equivalent to the tissue dose. Dose factors for exposure to noble gas plume gamma radiation, $P\gamma_i^s$, are computed by the MIDAS program.

---

a David Slade, ed., Meteorology and Atomic Energy 1968, TID-24190, pp. 350-355.

The dose from noble gases released from a vent (near ground level) or to skin from an elevated release is derived from a semi-infinite cloud model. Noble gas semi-infinite cloud gamma-to-total body dose factors, $P\gamma_i^v$, are listed in Appendix A under the plume pathway.

When the total body and organ doses from noble gases are computed as required by Section 7.3.1, the nearby resident exposed to the maximal ground-level noble gas concentration (minimum χ/Q) is selected as the receptor.

Alternatively, the dose from noble gases may be computed at 1260 meters NNW of the reactor where the nearby resident who may be exposed to maximal ground-level noble gas concentrations (minimum χ/Q) is selected as the receptor. In that case, values of the dose factors $P\gamma_i^s$ and $P\gamma_i^v$ in Table 3-5 are employed.[b] Reference meteorological dispersion for vent discharges at that location, $(\chi/Q)_v$, *is* 4.3×10^{-6} sec/m^3.

3.9.2 Dose to Skin

The beta radiation dose to the skin of a member of the public due to beta radiation from noble gas released from the Station may be calculated with the equation

$$D_\beta = \sum_i S_{\beta i}\left[Q_i \bullet \left(\frac{\chi}{Q}\right)\right]_s + \sum_v \sum_i S_{\beta i} \bullet \left[Q_i \bullet \left(\frac{\chi}{Q}\right)\right]_v$$

where

D_β = noble as dose to skin (mrem)

$S_{\beta i}$ = factor converting time integrated ground level concentration of noble gas to skin dose from beta radiation $\left(\frac{mrem}{Ci\ \sec/m^3}\right)$

Semi-infinite cloud noble gas beta-to-skin dose factors, $S_{\beta i}$ appear in Table 3-5.

The total dose to the skin from noble gases is approximately equal to the beta radiation dose to the skin plus the gamma radiation dose to the total body.

When the skin dose due to noble gas beta radiation is computed as required by Section 7.3.1, the receptor selected is the nearby resident exposed to maximal ground-level concentrations (maximum χ/Q).

---

[b] Dose transfer factors $P\gamma_i^v$ in Table 3.5 and in Appendix A under the plume pathway are the same.

Alternatively, the skin dose to a postulated receptor (resident) at 1260 meters NNW of the reactor may be calculated.

Figure 3.1
Gaseous Radioactive Waste Flow Diagram

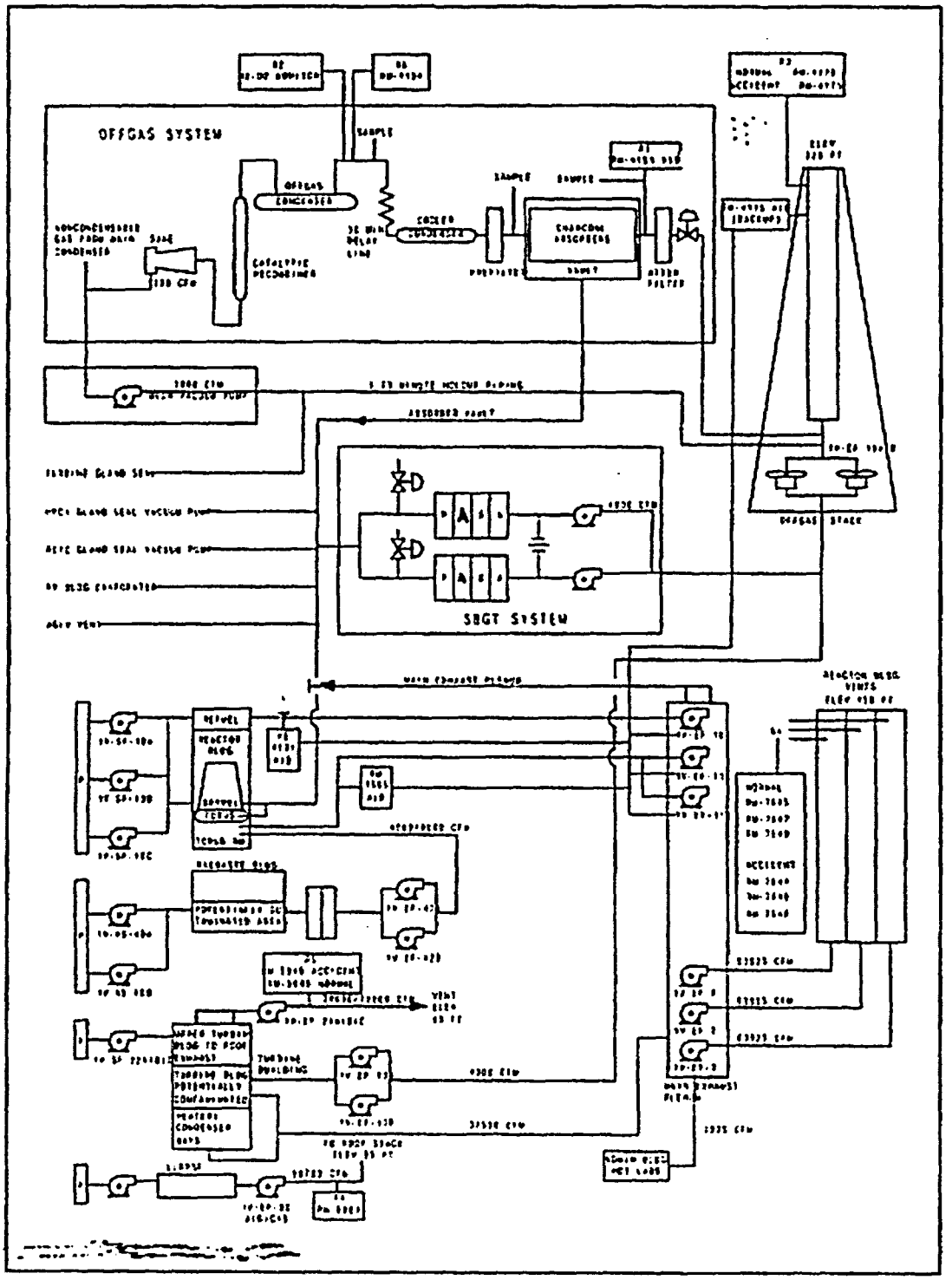

Figure 3-1 (Continued)

R1	Main Condenser SJAE Offgas Post-treatment Noble Gas Activity Monitor
R2	Main Condenser SJAE Offgas Hydrogen Monitor
R3	Offgas Stack Radiation Monitoring System
R4	Reactor Building Exhaust Vent Monitoring System
R5	Turbine Building Exhaust Vent Monitoring System
R6	Main Condenser SJAE Offgas Pretreatment Noble Gas Activity Monitor
R7	LLRPSF Exhaust Vent Monitoring System

Figure 3-2
Dose Calculation Sites

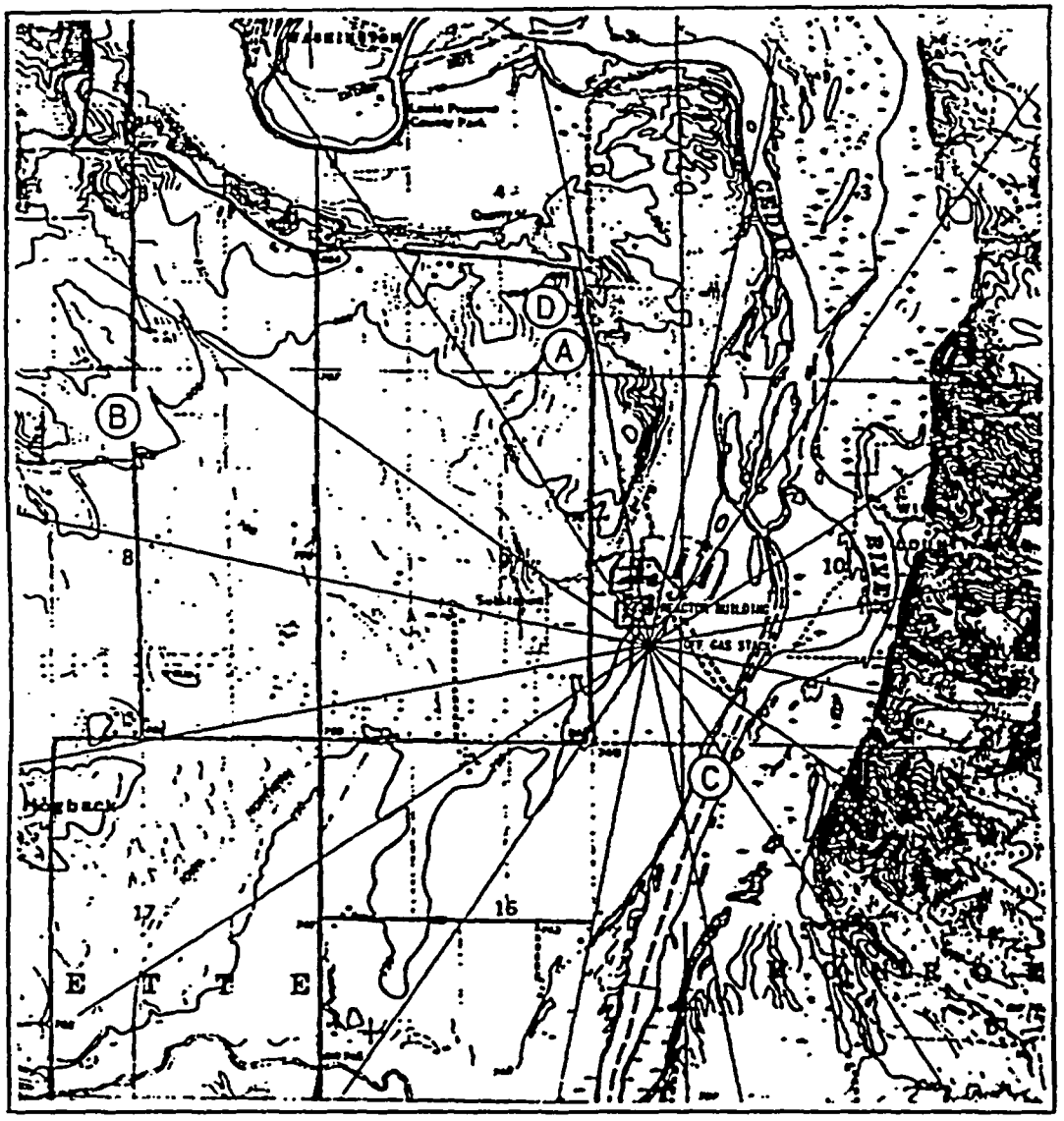

Site	Description
A	Noble gas gamma and beta doses to air, 1260 meters NNW
B	Milk cow, 2650 meters WNW
C	Aquatic pathways, in Cedar River
D	Most exposed resident, 1610 meters NNW

Table 3-1

Atmospheric Gaseous Release Points
at the Duane Arnold Energy Center

Parameter	RELEASE POINT			
	Offgas Stack	Reactor Building Vent	Turbine Building Vent	LLRPSF Building Vent
Release Height	328 feet	156 feet	90 feet	65 feet
Release Mode	Elevated	Wake-split	Wake-split	Wake-split
Effluent Source	Waste Gas System Standby Gas Treatment System	Reactor Building Radwaste Building Lower Turbine Building	Upper Turbine Building	LLRPSF Building and Storage Facility

Table 3-2
Computed Releases of Radioactive Noble Gases in Gaseous Effluent from Duane Arnold Energy Center

	STACK RELEASE		PLANT VENTS RELEASE	
Nuclide	(Ci/yr)[a]	Fraction[b]	(Ci/yr)[a]	Fraction[b]
Kr-83m	4.90E+01	2.53E-03	0	0
Kr-85m	2.34E+03	1.21E-01	7.40E+01	1.98E-02
Kr-85	1.40E+02	7.23E-03	0	0
Kr-87	1.56E+02	8.06E-03	1.36E+02	3.64E-02
Kr-88	1.65E+03	8.52E-02	2.36E+02	6.32E-02
Kr-89	6.40E+02	3.31E-02	0	0
Xe-131m	4.80E+01	2.48E-03	0	0
Xe-133m	3.50E+01	1.81E-03	0	0
Xe-133	1.24E+04	6.41E-01	3.92E+02	1.05E-01
Xe-135m	1.80E+01	9.30E-04	7.42E+02	1.99E-01
Xe-135	5.10E+02	2.63E-02	7.43E+02	1.99E-01
Xe-137	7.80E+02	4.03E-02	0	0
Xe-138	5.90E+02	3.05E-02	1.41E+03	3.78E-01
	19356	1.0	3733.	1.0

TABLE NOTATION

[a] Releases computed by BWR-GALE for DAEC Base Case gaseous radwaste treatment. Computed releases are included only to show the basis of the radionuclide distribution.

[b] This is the calculated distribution of radionuclides in gaseous effluents in each release pathway. To estimate radionuclide concentrations in a sample in which only the total activity concentration has been measured, multiply the total activity concentration by the fraction of respective radionuclides listed above.

Table 3-3

Transfer Factors for Maximum Offsite Air Dose

Radionuclide	Air Dose Transfer Factors		
	$A\gamma_i^s$ [a] $\left(\frac{mrad}{\mu Ci}\right)$	$A\gamma_i^v$ [b] $\left(\frac{mrad}{\mu Ci\ sec/m^3}\right)$	$A\beta_i$ [b] $\left(\frac{mrad}{\mu Ci\ sec/m^3}\right)$
Kr-83m	4.3E-14	6.1E-7	9.1E-6
Kr-85m	6.0E-12	3.9E-5	6.2E-5
Kr-85	8.4E-14	5.4E-7	6.2E-5
Kr-87	2.3E-11	2.0E-4	3.3E-4
Kr-88	6.4E-11	4.8E-4	9.3E-5
Kr-89	3.0E-11	5.5E-4	3.4E-4
Kr-90	---	5.2E-4	2.5E-4
Xe-131m	1.8E-12	4.9E-6	3.5E-5
Xe-133m	1.4E-12	1.0E-5	4.7E-5
Xe-133	1.5E-12	1.1E-5	3.3E-5
Xe-135m	1.1E-11	1.1E-4	2.3E-5
Xe-135	9.5E-12	6.1E-5	7.8E-5
Xe-137	2.6E-12	4.8E-5	4.0E-4
Xe-138	3.6E-11	2.9E-4	1.5E-4
Ar-41	4.4E-11	2.9E-4	1.0E-4

TABLE NOTATIONS

[a] An NRC code, RABFIN, modified for sector width averaged meteorology, was used to calculate the air dose transfer factors, $A\gamma_i^s$ for a stack discharge. They represent air dose at ground level 1260 meters NNW of the station from a unit release of each radionuclide *i* from the stack and dispersed by reference meteorology at the DAEC.

[b] Dose transfer factors for vent discharges, $A\gamma_i^v$ and $A\beta_i$ are equivalent to factors in Regulatory Guide 1.109, Table B-1, g-air and b-air, expressed in different units.

Table 3-4

Transfer Factors for Dose Equivalent Rate to A Person Offsite Due to Radioactive Noble Gases

Radionuclide	Dose Transfer Factors		
	[a, b, c] DF_i^s $\left[\frac{mrem}{(\mu Ci\ yr)/sec}\right]$	[d] DF_i^v $\left[\frac{mrem}{(\mu Ci\ yr)/m^3}\right]$	$S_{\beta i}$ $\left[\frac{mrem}{(\mu Ci\ yr)/m^3}\right]$
Kr-83m	6.27E-9	7.56E-2	0
Kr-85m	1.81E-4	1.17E+3	1.46E+3
Kr-85	2.51E-6	1.61E+1	9.73E+3
Kr-87	6.97E-4	5.92E+3	9.73E+3
Kr-88	1.91E-3	1.47E+4	2.37E+3
Kr-89	9.14E-4	1.66E+4	1.01E+4
Kr-90	---	1.56E+4	7.29E+3
Xe-131m	4.83E-5	9.15E+1	4.76E+2
Xe-133m	3.61E-5	2.51E+2	9.94E+2
Xe-133	4.09E-5	2.94E+2	3.06E+2
Xe-135m	3.39E-4	3.12E+3	7.11E+2
Xe-135	2.84E-4	1.81E+3	1.86E+3
Xe-137	7.90E-5	1.42E+3	1.22E+4
Xe-138	1.08E-3	8.83E+3	4.13E+3
Ar-41	1.32E-3	8.84E+3	2.69E+3

TABLE NOTATIONS

[a] Receptor located 1260 meters NNW of Station

[b] Based on reference meteorology at DAEC

[c] Factors DF_i^s computed by computer code RABFIN, modified for sector width averaged meteorology

[d] Factors DF_i^v from Regulatory Guide 1.109, revision 1, Table B-1, column 5

Table 3-5
Transfer Factors for Dose Equivalent Rate to A Person Offsite Due to Radioactive Noble Gases

Radionuclide	Dose Transfer Factors		
	[a, b, c] $P\gamma_i^s$ $\left[\frac{mrem}{Ci}\right]$	[d] $P\gamma_i^v$ $\left[\frac{mrem}{(Ci\,sec)/m^3}\right]$	$S_{\beta i}$ $\left[\frac{mrem}{(Ci\,sec)/m^3}\right]$
Kr-83m	1.39E-10	1.68E-3	---
Kr-85m	4.03E-6	2.60E+1	4.63E+1
Kr-85	5.58E-8	3.58E-1	4.25E+1
Kr-87	1.55E-5	1.31E+2	3.08E+2
Kr-88	4.25E-5	3.26E+2	7.51E+1
Kr-89	2.03E-5	3.68E+2	3.20E+2
Kr-90	---	3.46E+2	2.31E+2
Xe-131m	1.07E-6	2.03	1.51E+1
Xe-133m	8.05E-7	5.57	3.15E+1
Xe-133	9.03E-7	6.52	9.70
Xe-135m	7.49E-6	6.92E+1	2.25E+1
Xe-135	6.31E-6	4.01E+1	5.89E+1
Xe-137	1.75E-6	3.15E+1	3.87E+2
Xe-138	2.39E-5	1.96E+2	1.31E+2
Ar-41	2.92E-5	1.96E+2	8.52E+1

TABLE NOTATIONS

[a] Receptor located 1260 meters NNW of Station

[b] Based on reference meteorology at DAEC

[c] Factors $P\gamma_i^s$ and $P\gamma_i^v$ already account for a 0.7 residential shielding factor. Factors $P\gamma_i^s$ were computed by computer code RABFIN, modified for sector width averaged meteorology

[d] Factors $P\gamma_i^v$ from Regulatory Guide 1.109, revision 1, Table B-1

4.0 DOSE COMMITMENT FROM RELEASE OVER EXTENDED TIME

4.1 Dose Assessment for 10 CFR Part 50, Appendix I

Sections 7.1.3, 7.2.3, and 7.2.4 require quarterly and annual assessments to demonstrate compliance with Appendix I dose limits. The assessment includes the following calculations of dose as described by equations for:

1. total body and maximally exposed organ doses due to liquid effluent via drinking water and eating fish from the River and from consuming food irrigated with river water as in paragraph 2.5.

2. total body and maximally exposed organ doses due to gaseous effluents[a] other than noble gases as in paragraph 3.8.

3. doses to air offsite due to noble gas g as in paragraph 3.6 and due to noble gas β as in paragraph 3.7.

The dose calculations are based on liquid and gaseous effluents from the Station during each calendar quarter and for a calendar year, determined in accord with Tables 7.1-2 and 7.2-2.

Environmental concentrations depend on dispersion and dilution of the effluent. For aqueous effluents over extended time, the aquatic concentration is estimated according to section 2.2. Atmospheric dispersion and deposition factors used to estimate the dose commitment due to gaseous effluents are ordinarily derived from reference meteorological data. Otherwise, quarterly averaged or annual averaged meteorological conditions concurrent with the gaseous release being evaluated will be used to estimate atmospheric dispersion and deposition.

The receptor of the dose is described such that the dose to any resident near the Station is unlikely to be underestimated. That is, the receptor is selected on the basis of the combination of applicable pathways of exposure to gaseous effluent identified in the annual land use census and maximum ground level χ/Q at the residence. Conditions (i.e., location, χ/Q, and/or pathways) more conservative (i.e., expected to yield higher calculated doses) than appropriate for the maximally exposed individual may be assumed in the dose assessment.

[a] Radioactive iodine-131, iodine-133, tritium, and radioactive material in particulate form having half-lives greater than 8 days.

Seasonal appropriateness of exposure pathways may be considered. Exposure by eating fresh vegetation or drinking milk from cows or goats fed fresh forage is an inappropriate assumption during the first or fourth calendar quarter; rather consumption of stored vegetation and stored forage is assumed during those quarters. Otherwise, during the second and third calendar quarters, exposure by eating fresh vegetation and/or drinking milk from cows or goats fed fresh forage is assumed where those pathways exist. Similarly, the liquid effluent-river-fish-man pathway is not assumed during the winter quarter.

Factors converting stack-released noble gas to gamma radiation dose from the overhead plume are calculated on the basis of reference meteorological data for the receptor location or alternatively, by the MIDAS program for a residential location offsite where maximum χ/Q at ground level occurs.

Other environmental pathway-to-dose transfer factors used in the dose calculations are provided in Appendix A.

4.2 Dose Assessment for 40 CFR Part 190 and 10 CFR 72.104

The regulations governing the maximum allowable dose or dose commitment to a member of the public from all uranium fuel cycle-sources of radiation and radioactive material in the environment is stated in 40 CFR Part 190 and 10 CFR 72.104. It requires that the dose or dose commitment to a member of the public from all sources not exceed 25 mrem/yr to the whole body or 25 mrem/yr to any organ or 75 mrem/yr to the thyroid. Section 7.3.1 requires calculation of the dose at least once every year to assess compliance with the regulation. More frequent calculations may be performed if higher than normal releases are experienced (twice the design objective rates in a single quarter).

Fuel cycle sources or nuclear power reactors other than the Station[b] itself do not measurably or significantly increase the radioactivity concentration in the vicinity of the Station; therefore, only radiation and radioactivity in the environment attributable to the Station itself are considered in the assessment of compliance with 40 CFR Part 190 and 10 CFR 72.104.

Contributions to the dose due to liquid and gaseous effluent are calculated as described by the equations for:

1. total body and maximally exposed organ doses due to liquid effluent via drinking water, consuming irrigated food and from eating fish from the River as in paragraph 2.5

2. total body dose due to noble gas γ as in paragraph 3.9.1

3. skin dose due to noble gas β as in paragraph 3.9.2

[b] The Station is defined as BOTH the Nuclear Reactor Facility and the Independent Spent Fuel Storage Installation (ISFSI).

4. total body and maximally exposed organ doses due to gaseous effluents[a] other than noble gases as in Paragraph 3.8.

Additionally, the contribution to total dose from direct radiation is assessed annually by using environmental TLDs.

The doses are calculated on the basis of liquid and gaseous effluents from the Station during 12 consecutive months, determined in accord with Tables 7.1-2 and 7.2-2. For the purpose of the Annual Radiological Environmental Report, doses are based upon release during a calendar year.

Aqueous radioactive material concentrations are estimated according to paragraph 2.2 on the basis of annual averaged stream flow. Annual averaged meteorological conditions concurrent with gaseous releases being evaluated are used to estimate atmospheric dispersion, deposition, and elevated plume gamma exposure.

The receptor of the dose is described such that the dose to any resident near the Station is not likely to be underestimated, although conditions more conservative than appropriate for the maximally exposed person may be assumed in the dose assessment.

Ordinarily, the receptor is selected on the basis of the applicable combination of existing pathways of exposure to gaseous effluent identified in the annual land use census and the maximum ground level χ/Q at the residence.

When assessing compliance with 40 CFR 190, Radiological Environmental Monitoring Program results may be used to indicate actual radioactivity levels in the environment attributable to the DAEC. These measured levels may be used to supplement the evaluation of doses to members of the public for assessing compliance with 40 CFR 190.

Factors converting stack-released noble gas to gamma radiation dose from the overhead plume are calculated on the basis of annual averaged meteorological data for the receptor location. Other environmental pathway-to-dose transfer factors are listed in Appendices A, B and C.

[a] Radioactive iodine-131, iodine-133, tritium, and radioactive material in particulate form having half-lives greater than 8 days.

5.0 RADIOLOGICAL ENVIRONMENTAL MONITORING PROGRAM

Section 5.0 of the ODAM provides a description of the Radiological Environmental Monitoring Program which was previously located in the Technical Specifications. This section also contains descriptions of the Environmental Sampling Program Station Locations.

5.1 Radiological Environmental Monitoring Program

A program shall be provided to monitor the radiation and radionuclides in the environs of the station.

The program shall provide:

(1) representative measurements of radioactivity in the highest potential exposure pathways,

(2) verification of the accuracy of the effluent monitoring program and modeling of environmental exposure pathways.

The program shall:

(1) be contained in the ODAM,

(2) conform to the guidance of Appendix I to 10 CFR Part 50 and 10 CFR 72,

(3) include the following:

(a) Monitoring, sampling, analysis, and reporting of radiation and radionuclides in the environment in accordance with the methodology and parameters in the ODAM.

(b) A Land Use Census to ensure that changes in the use of areas at and beyond the SITE BOUNDARY are identified and that modifications to the monitoring program are made if required by the results of this census.

(c) Participation in an Interlaboratory Comparison Program to ensure that independent checks on the precision and accuracy of the measurements of radioactive materials in environmental sample matrices are performed as part of the quality assurance program for environmental monitoring.

5.2 Sampling Station Locations

Sampling station locations identified in Table 5-1 correspond to the minimum required number of radiological environmental monitoring program sampling stations in Table 6.3-1. Environmental monitoring locations are shown on Figures 5-1 and 5-2. DAEC may conduct additional environmental monitoring exclusive of the requirements of Specifications 6.3.2 and 6.4.2.

Figure 5-1
Radiological Environmental Monitoring Program
Sampling Near the Duane Arnold Energy Center

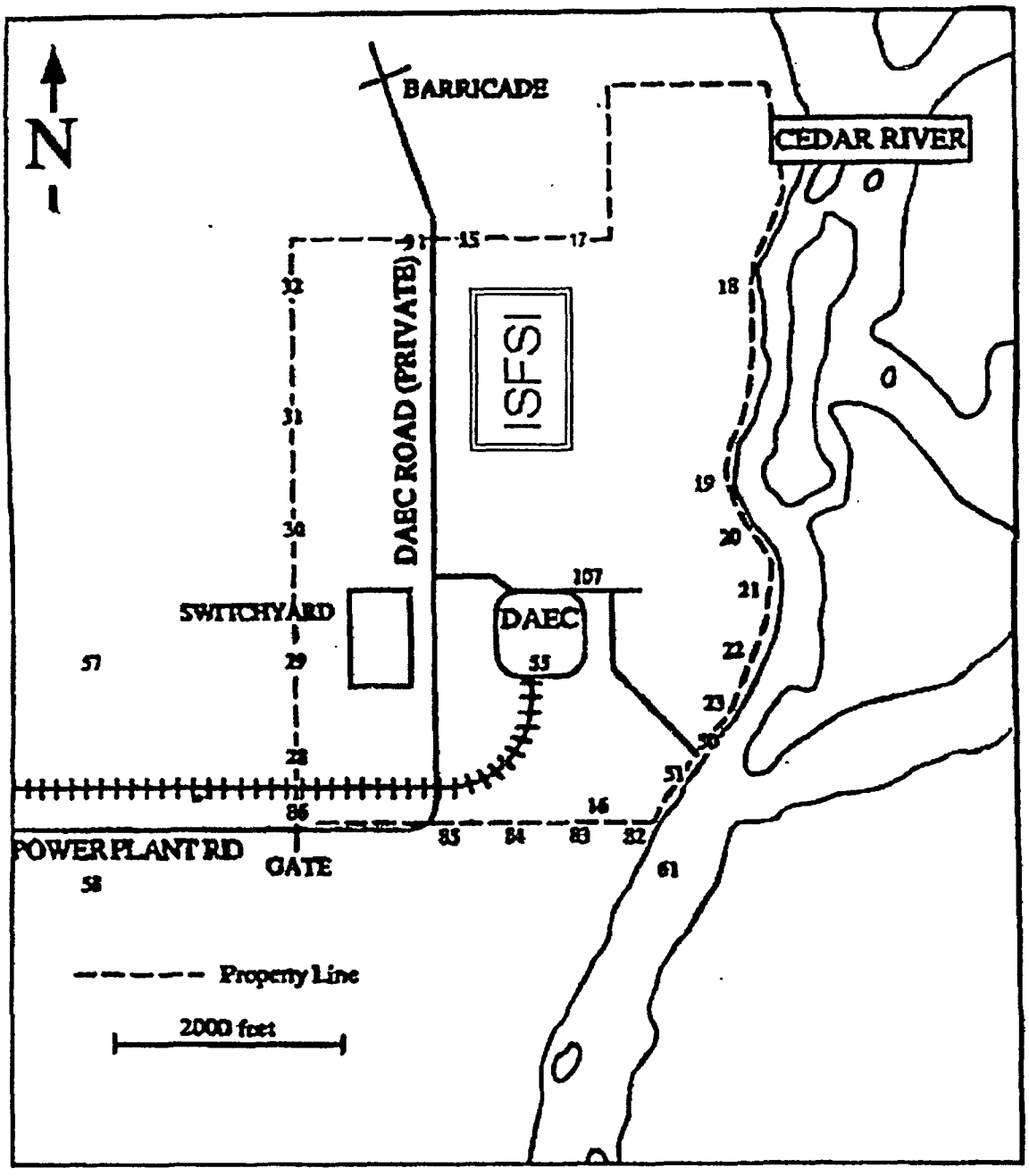

Figure 5-2
Radiological Environmental Monitoring Program
Sampling Stations Outside 0.5 Miles from DAEC

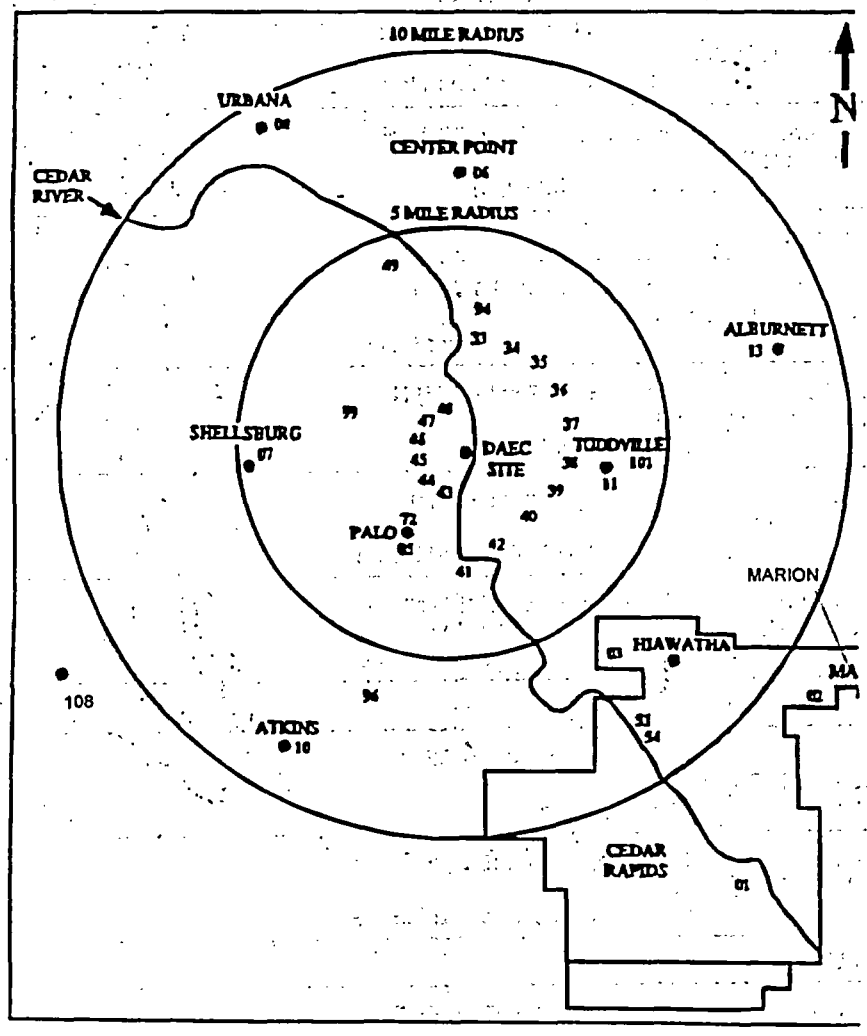

Table 5-1
ENVIRONMENTAL SAMPLE STATIONS

Station Number	Station Location and Sample Type
1	Location: Cedar Rapids, 11 miles (135°) SE Type :TLD Control Airborne Particulate Control
2	Location: Marion, 11 miles (125°) ESE Type :TLD Control Airborne Particulate and Iodine Control
3	Location: Hiawatha, 7 miles (130°) SE Type :TLD Control Airborne Particulate
4	Not used
5	Location: Palo, 3 miles (200°) SSW Type :TLD Control Airborne Particulate and Iodine
6	Location: Center Point, 7 miles (0°) N Type :TLD Control Airborne Particulate
7	Location: Shellsburg, 6 miles (255°) W Type :TLD Control Airborne Particulate and Iodine
8	Location: Urbana, 10 miles (345°) NW Type :TLD Control Airborne Particulate and Iodine
9	Not Used
10	Location: Atkins, 9 miles (210°) SSW Type :TLD Control Airborne Particulate
11	Location: Toddville, 4 miles (90°) E Type :TLD Control Airborne Particulate and Iodine
12	Not Used
13	Location: Alburnett, 9 miles (70°) ENE Type :TLD Control Airborne Particulate Control
14	Not Used
15	Location: On-site, 0.5 miles (305°) NW Type :TLD Airborne Particulate and Iodine
16	Location: On-site, 0.5 miles (190°) SSE Type :TLD Airborne Particulate Vegetation
17	Location: On-site, 0.5 miles (0°) N Type: TLD

Table 5-1
ENVIRONMENTAL SAMPLE STATIONS

18	Location: On-site, 0.5 miles NNE Type :TLD
19	Location: On-site, 0.5 miles NE Type :TLD
20	Location: On-site, 0.5 miles ENE Type :TLD
21	Location: On-site, 0.5 miles ENE Type :TLD
22	Location: On-site, 0.5 miles E Type :TLD
23	Location: On-site, 0.5 miles ESE Type :TLD
24	Not Used
25	Not Used
26	Not Used
27	Not Used
28	Location: On-site, 0.5 miles WSW Type :TLD
29	Location: On-site, 0.5 miles W Type :TLD
30	Location: On-site, 0.5 miles WNW Type : TLD
31	Location: On-site, 0.5 miles NW Type :TLD
32	Location: On-site, 0.5 miles NNW Type :TLD
33	Location: 3 miles N Type :TLD
34	Location: 3 miles NNE Type :TLD
35	Location: 3 miles NE Type :TLD
36	Location: 3 miles ENE Type :TLD
37	Location: 3 miles E Type :TLD
38	Location: 3 miles ESE Type :TLD

Table 5-1
ENVIRONMENTAL SAMPLE STATIONS

39	Location: Type :	3 miles SE TLD
40	Location: Type :	3 miles SSE TLD
41	Location: Type :	3 miles S TLD
42	Location: Type :	3 miles SSE TLD (new January, 1996)
43	Location: Type :	1 mile SSW TLD
44	Location: Type :	1 mile WSW TLD
45	Location: Type :	1 mile W TLD
46	Location: Type :	1 mile WNW TLD
47	Location: Type :	1 mile WNW TLD
48	Location: Type :	1 mile NW TLD
49	Location: Type :	Lewis Access, upstream of DAEC 4 miles NNW Fish Control Surface Water Control
50	Location: Type :	Plant Intake Sediment Control Surface Water
51	Location: Type :	Plant Discharge Sediment Surface Water
52	Not Used	
53	Location: Type :	Treated Municipal Water Ground Water
54	Location: Type :	Inlet to Municipal Water Treatment System Ground Water
55	Location: Type :	On-site Well Ground Water
56	Not Used	
57	Location: Type :	Farm, 1 mile WSW Ground Water Vegetation

Table 5-1
ENVIRONMENTAL SAMPLE STATIONS

58	Location: Farm, 1 mile WSW-SW Type : Ground Water Vegetation
59	Not Used
60	Not Used
61	Location: Cedar River about one-half mile downstream from DAEC discharge Type : Fish
62	Not Used
63	Not Used
64	Not Used
65	Not Used
66	Not Used
67	Not Used
68	Not Used
69	Not Used
70	Not Used
71	Not Used
72	Location: Farm, 2 miles SSW Type : Ground Water Vegetation
73	Not Used
74	Not Used
75	Not Used
76	Not Used
77	Not Used
78	Not Used
79	Not Used
80	Not Used
81	Not Used
82	Location: On-site, 0.5 miles SE Type : TLD
83	Location: On-site, 0.5 miles SSE Type : TLD

Table 5-1
ENVIRONMENTAL SAMPLE STATIONS

84	Location: Type :	On-site, 0.5 miles S TLD
85	Location: Type :	On-site, 0.5 miles SSW TLD
86	Location: Type :	On-site, 0.5 miles SW TLD
87	Not Used	
88	Not Used	
89	Not Used	
90	Not Used	
91	Location: Type :	On-site, 0.5 miles N TLD
92	Not Used	
93	Not Used	
94	Location: Type :	Farm, 2.7 miles N Vegetation
95	Not Used	
96	Location: Type :	Farm, 8 miles SSW Milk Vegetation
97	Not Used	
98	Not Used	
99	Location: Type :	Pleasant Creek Lake, 2.5 miles WNW Surface Water
100	Not Used	
101	Location: Type :	Farm, 4 miles E Milk
102	Not Used	
103	Not Used	
104	Not Used	
105	Not Used	
106	Not Used	
107	Location: Type :	DAEC Sewage Plant Effluent Surface Water Bottom Sediments
108	Location: Type:	17.3 miles SW Milk Control Vegetation Control
109	Location: Type:	3.6 miles SW Milk

O 6.0.1 USE AND APPLICATION

O 6.0.1.1 Definitions

NOTE
The defined terms of this section appear in capitalized type and are applicable throughout these OLCOs and Bases

Term	Definition
ACTIONS	ACTIONS shall be that part of a ODAM Specification that prescribes Required Actions to be taken under designated Conditions within specified Completion Times.
CHANNEL CALIBRATION	A CHANNEL CALIBRATION shall be the adjustment, as necessary, of the channel output such that it responds within the necessary range and accuracy to known values of the parameter that the channel monitors. The CHANNEL CALIBRATION shall encompass the entire channel, including the required sensor, alarm, display, and trip functions, and shall include the CHANNEL FUNCTIONAL TEST. The CHANNEL CALIBRATION may be performed by means of any series of sequential, overlapping, or total channel steps so that the entire channel is calibrated.
CHANNEL	A channel is an arrangement of a sensor and associated components used to evaluate plant variables and produce discrete outputs used in logic. A channel terminates and loses its identity where individual channel outputs are combined in logic.
CHANNEL CHECK	A CHANNEL CHECK shall be the qualitative assessment, by observation, of channel behavior during operation. This determination shall include, where possible, comparison of the channel indication and status to other indications or status derived from independent instrument channels measuring the same parameter.
CHANNEL FUNCTIONAL TEST	A CHANNEL FUNCTIONAL TEST shall be the injection of a simulated or actual signal into the channel as close to the sensor as practicable to verify OPERABILITY, including required alarm, interlock, display, and trip functions , and channel failure trips. The CHANNEL FUNCTIONAL TEST may be performed by means of any series of sequential, overlapping, or total channel steps.

GASEOUS RADWASTE TREATMENT SYSTEM	A GASEOUS RADWASTE TREATMENT SYSTEM is any system designed and installed to reduce radioactive gaseous effluents by collecting primary coolant system offgases from the primary system and providing delay or holdup for the purpose of reducing radioactivity prior to release to the environment.
MEMBER(S) OF THE PUBLIC	MEMBER(S) OF THE PUBLIC are persons who are not occupationally associated with the Company and who do not normally frequent the DAEC site. The category does not include contractors, contractor employees, vendors, or persons who enter the site to make deliveries or to service equipment.
MODE	A MODE shall correspond to any on inclusive combination of mode switch position, average reactor coolant temperature, and reactor vessel head closure bolt tensioning specified in Technical Specifications Table 1.1-1 with fuel in the reactor vessel.
OPERABLE-OPERABILITY	A system, subsystem, division, component, or device shall be OPERABLE or have OPERABILITY when it is capable of performing its specified safety function(s) and when all necessary attendant instrumentation, controls, normal or emergency electrical power, cooling and seal water, lubrication, and other auxiliary equipment that are required for the system, subsystem, division, component, or device to perform its specified safety function(s) are also capable of performing their related support function(s).
SITE BOUNDARY	The SITE BOUNDARY is that line beyond which the land is neither owned, nor leased, nor otherwise controlled by the Company. UFSAR Figure 1.2-1 identifies the DAEC SITE BOUNDARY.
SOURCE CHECK	A SOURCE CHECK is the assessment of channel response when the channel sensor is exposed to a source of radiation.
UNRESTRICTED AREA	The UNRESTRICTED AREA is that land (offsite) beyond the SITE BOUNDARY.

O 6.0.1 USE AND APPLICATION

O 6.0.1.2 Logical Connectors

PURPOSE	The purpose of this section is to explain the meaning of logical connectors. Logical connectors are used in offsite Dose Assessment Manual (ODAM) to discriminate between, and yet connect, discrete Conditions, Required Actions, Completion Times, Surveillances, and Frequencies. The only logical connectors that appear in the ODAM are **AND** and **OR**. The physical arrangement of these connectors constitutes logical conventions with specific meanings.
BACKGROUND	Several levels of logic may be used to state Required Actions. These levels are identified by the placement (or nesting) of the logical connectors and by the number assigned to each Required Action. The first level of logic is identified by the first digit of the number assigned to a Required Action and the placement of the logical connector in the first level of nesting (i.e., left justified with the number of the Required Action). The successive levels of logic are identified by additional digits of the Required Action number and by successive indentions of the logical connectors. When logical connectors are used to state a Condition, Completion Time, Surveillance, or Frequency, only the first level of logic is used, and the logical connector is left justified with the statement of the Condition, Completion Time, Surveillance, or Frequency.
EXAMPLES	The ODAM uses Logical Connectors in precisely the same manner they are used in the Technical Requirements Manual (TRM) and the Technical Specifications (TS). Examples illustrating the use of logical connectors are found in TS 1.2 and in the TRM T1.2

O 6.0.1 USE AND APPLICATION

O 6.0.1.3 Completion Times

PURPOSE	The purpose of this section is to establish the Completion Time convention and to provide guidance for its use.
BACKGROUND	OLCOs specify minimum requirements for ensuring safe operation of the unit. The ACTIONS associated with a OLCO state Conditions that typically describe the ways in which the requirements of the OLCO can fail to be met. Specified with each stated Condition are Required Action(s) and Completion Times(s).
DESCRIPTION	The Completion Time is the amount of time allowed for completing a Required Action. It is referenced to the time of discovery of a situation (e.g., inoperable equipment or variable not within limits) that requires entering an ACTIONS Condition unless otherwise specified, providing the unit is in a MODE or specified condition stated in the Applicability of the OLCO. Required Actions must be completed prior to the expiration of the specified Completion Time. An ACTIONS Condition remains in effect and the Required Actions apply until the Condition no longer exists or the unit is not within the OLCO Applicability. If situations are discovered that require entry into more than one Condition at a time within a single OLCO (multiple Conditions), the Required Actions for each Condition must be performed within the associated Completion Time. When in multiple Conditions, separate Completion Times are tracked for each Condition starting from the time of discovery of the situation that required entry into the Condition. Once a Condition has been entered, subsequent divisions, subsystems, components, or variables expressed in the Condition, discovered to be inoperable or not within limits, will not result in separate entry into the Condition unless specifically stated. The Required Actions of the Condition continue to apply to each additional failure, with Completion Times based on initial entry into the Condition.

(continued)

However, when a subsequent division, subsystem, component, or variable expressed in the Condition is discovered to be inoperable or not within limits, the Completion Time(s) may be extended. To apply this Completion Time extension, two criteria must first be met. The subsequent inoperability:

a. Must exist concurrent with the first inoperability; and
b. Must remain inoperable or not within limits after the first inoperability is resolved.

The total Completion Time, as measured from discovery of the subsequent inoperability.

The above Completion Time extensions do not apply to those OLCOs that have exceptions that allow completely separate re-entry into the Condition (for each division, subsystem, component or variable expressed in the Condition) and separate tracking of Completion Times based on this re-entry. These exceptions are stated in individual OLCOs.

The above Completion Time extension does not apply to a Completion Time with a modified "time zero." This modified "time zero" may be expressed as a repetitive time (i.e., .. once per 8 hours." where the Completion Time is referenced from a previous completion of the Required Action versus the time of Condition entry) or as a time modified by the phrase "from discovery . . ."

When "Immediately" is used as a Completion Time, the Required Action should be pursued without delay and in a controlled manner.

The ODAM implements Completion Times in precisely the same manner they are applied in the Technical Requirements Manual (TRM) and the Technical Specifications (TS).

Examples illustrating the implementation of Completion Times are found in TS 1.3 and in the TRM T1.3.

O 6.0.1 USE AND APPLICATION

O 6.0.1.4 Frequency

PURPOSE	The purpose of this section is to define the proper use and application of Frequency Requirements.
DESCRIPTION	Each ODAM Surveillance Requirement (OSR) has a specified Frequency in which the Surveillance must be met in order to meet the associated OLCO. An understanding of the correct application of the specified Frequency is necessary for compliance with the OSR. The "specified Frequency" is referred to throughout this section and each of the Specifications of Section 6.0.3.0, Surveillance Requirement (SR) Applicability. The "specified Frequency" consists of the requirements of the Frequency column of each OSR, as well as certain Notes in the Surveillance column that modify performance requirements. Sometimes special situations dictate when the requirements of a Surveillance are to be met. They are "otherwise stated" conditions allowed by OSR 7.0.3.0.1. They may be stated as clarifying Notes in the Surveillance, as part of the Surveillance or both. Situations where a Surveillance could be required (i.e., its Frequency could expire), but where it is not possible or not desired that it be performed until sometime after the associated OLCO is within its Applicability, represent potential OSR 7.0.3.0.4 conflicts. To avoid these conflicts, the OSR (i.e., the Surveillance or the Frequency) is stated such that it is only "required" when it can be and should be performed. With an OSR satisfied, OSR 6.0.3.0.4 imposes no restriction. The use of "met" or "performed" in these instances conveys specific meanings. A Surveillance is "met" only when the acceptance criteria are satisfied. Known failure of the requirements of a Surveillance. even without a Surveillance specifically being "performed," constitutes a Surveillance not "met." "Performance" refers only to the requirement to specifically determine the ability to meet the acceptance criteria. OSR 7.0.3.04 restrictions would not apply if both the following conditions are satisfied: a. The surveillance is not required to be performed; and b. The Surveillance is not required to be met or, even if required to be met, is not known to be failed.
EXAMPLES	The ODAM implements Frequency in precisely the same manner they as it is employed in the Technical Requirements Manual (TRM) and the Technical Specifications (TS). Examples illustrating the use of logical connectors are found in TS 1.4 and in the TRM T1.4.

6.0.3 Limiting Conditions for Operation (OLCO) Applicability

OLCO 6.0.3.0.1	OLCOs shall be met during the MODES or other specified conditions in the Applicability, except as provided in OLCO 6.0.3.0.2.
OLCO 6.0.3.0.2	Upon discovery of a failure to meet an OLCO, the Required Actions of the associated Conditions shall be met, except as provided in OLCO 6.0.3.0.5. If the OLCO is met or is no longer applicable prior to expiration of the specified Completion Time(s), completion of the Required Action(s) is not required, unless otherwise stated.
OLCO 6.0.3.0.3	Not Used.
OLCO 6.0 3.0.4	When an OLCO is not met, entry into a MODE or other specified condition in the Applicability shall not be made except when the associated ACTIONS to be entered permit continued operation in the MODE or other specified condition in the Applicability for an unlimited period of time. This OLCO shall not prevent changes in MODES or other specified conditions in the Applicability that are required to comply with ACTIONS or that are part of a shutdown of the unit.
OLCO 6.0 3.0.4	Exceptions to this OLCO are stated in the individual OLCOs. These exceptions allow entry into MODES or other specified conditions in the Applicability when the associated ACTIONS to be entered allow unit operation in the MODE or other specified condition in the Applicability only for a limited period of time. OLCO 6.0.3.0.4 is only applicable for entry into a MODE or other specified condition in the Applicability in MODES 1 2, and 3.
OLCO 6.0.3.0.5	Equipment removed from service or declared inoperable to comply with ACTIONS may be returned to service under administrative control solely to perform testing required to demonstrate its OPERABILITY or the OPERABILITY of other equipment. This is an exception to OLCO 6.0.3.0.2 for the system returned to service under administrative control to perform the testing required to demonstrate OPERABILITY.

(continued)

OLCO 6.0.3.0.6	When An ODAM supported system OLCO is not met solely due to a TS support system OLCO not being met, the ODAM Conditions and Required Actions associated with this supported system are not required to be entered. Only the TS support system OLCO ACTIONS are required to be entered. This is an exception to OLCO 6.0.3.0.2 for the ODAM supported system. When a support system's Required Action (either TS or ODAM) directs a supported system in the ODAM to be declared inoperable or directs entry into Conditions and Required Actions for a ODAM supported system, the applicable ODAM Conditions and Required Actions shall be entered in accordance with ODAM 6.0.3.0.2 When a TS supported system OLCO is not met solely due to a ODAM support system OLCO not being met, the TS supported system Conditions and Required Actions are required to be entered Immediately, under the definition of OPERABILITY, as neither TS LCO 3.0.6 or ODAM OLCO 6.0.3.0.6 apply. When an inoperable Technical Specification support system, structure, or component, (SSC) provides support to a ODAM SSC, which, in turn, supports a supported SSC addressed in the Technical Specifications, Technical Specification LCO 3.0.6 remains applicable.

O 7.0.3 SURVEILLANCE REQUIREMENT (OSR) APPLICABILITY

OSR 7.0.3.0.1	OSRs shall be met during the MODES or other specified conditions in the Applicability for individual OLCOS, unless otherwise stated in the OSR. Failure to meet a Surveillance, whether such failure is experienced during the performance of the Surveillance or between performances of the Surveillance, shall be failure to meet the OLCO. Failure to perform a Surveillance within the specified Frequency shall be failure to meet the OLCO except as provided in OSR 7.0.3.0.3. Surveillances do not have to be performed on inoperable equipment or variables outside specified limits.
OSR 7.0.3.0.2	The specified Frequency for each OSR is met if the Surveillance is performed within 1.25 times the interval specified in the Frequency, as measured from the previous performance or as measured from the time a specified condition of the Frequency is met. For Frequencies specified as "once," the above interval extension does not apply. If a Completion Time requires periodic performance on a "once per . . . ." basis, the above Frequency extension applies to each performance after the initial performance. Exceptions to this OSR are stated in the individual OLCOs.
OSR 7.0.3.0.3	If it is discovered that a Surveillance was not performed within its specified Frequency, then compliance with the requirement to declare the OLCO not met may be delayed, from the time of discovery, up to 24 hours or up to the limit of the specified Frequency, whichever is more. This delay period is permitted to allow performance of the Surveillance. If the Surveillance is not performed within the delay period, the OLCO must immediately be declared not met, and the applicable Condition(s) must be entered. When the Surveillance is performed within the delay period and the Surveillance is not met, the OLCO must immediately be declared not met, and the applicable Condition(s) must be entered.
OSR 7.0.3.0.4	Entry into a MODE or other specified condition in the Applicability of an OLCO shall not be made unless the OLCO's Surveillances have been met within their specified Frequency. This provision shall not prevent entry into MODES or other specified conditions in the Applicability that are required to comply with ACTIONS or that are part of a shutdown of the unit. OSR 7.0.3.0.4 is only applicable for entry into a MODE or other specified condition in the Applicability in MODES 1, 2, and 3.

O 6.1 RADIOACTIVE LIQUID EFFLUENT CONTROLS

O 6.1.1 Radioactive Liquid Instrumentation

OLCO 6.1.1 The Radioactive Liquid Instrumentation for each function in Table 6.1-1 shall be OPERABLE with their alarm and trip setpoints set to ensure that the limits of Section 6.1.2 are not exceeded.

APPLICABILITY: As shown in Table 6.1-1

ACTIONS

CONDITION	REQUIRED ACTION		COMPLETION TIME
A. One or more channels inoperable	A.1	Enter the condition(s) referenced in Table 6.1-1 for the channel(s).	Immediately
	AND		
	A.2	Restore required channel(s) to OPERABLE status.	30 days
B. As required by Required Action A.1 and referenced in Table 6.1-1	B.1	Obtain at least two samples and analyze in accordance with Section 6.1.2 and Table 7.1-2	Prior to release
	AND		
	B.1	Independently verify release rate calculations and discharge valving by technically qualified Facility Staff member.	Prior to release
C. As required by Required Action A.1 and referenced in Table 6.1-1	C.1	Obtain sample and analyze for either gross beta/gamma or gamma radioactivity.	Once per 8 Hours
D. Less than the minimum required channels OPERABLE.	D.1	Estimate flow rate at least once per batch.	Immediately

CONDITION	REQUIRED ACTION	COMPLETION TIME
E. Required Action and associated Completion Time of Condition A not met.	E.1 Explain in next Annual Radioactive Material Release Report why the instrument was not made operable in a timely manner.	Next submittal of the Annual Radioactive Material Release Report

SURVEILLANCE REQUIREMENTS

----------NOTE----------
Instrumentation shall be OPERABLE and in service except that channels out of service are permitted for the purpose of required tests, checks, and calibrations without declaring the channel to be inoperable.

SURVEILLANCE		FREQUENCY
OSR 7.1.1.1	Perform CHANNEL CHECK	24 Hours
OSR 7.1.1.2	Perform SOURCE CHECK	24 Hours
OSR 7.1.1.3	Perform SOURCE CHECK	30 Days
OSR 7.1.1.4	Perform CHANNEL FUNCTIONAL TEST	92 Days
OSR 7.1.1.5	Perform CHANNEL CALIBRATION	18 Months
OSR 7.1.1.6	Perform Monitor Setpoint Calculation.	18 Months
OSR 7.1.1.7	Perform CHANNEL FUNCTIONAL TEST	Prior to release
OSR 7.1.1.8	Perform CHANNEL CALIBRATION	Prior to release
OSR 7.1.1.9	Perform Monitor Setpoint Calculation.	Prior to release

TABLE 6.1-1 / 7.1-1 RADIOACTIVE LIQUID EFFLUENT MONITORING INSTRUMENTATION				
Instrument	Applicability	Minimum Channels Operable	Conditions Referenced from Required Action A.1	Surveillance Requirements
1. Gross Radioactive Monitors Providing Automatic Termination of Release				
a. Liquid Radwaste Effluent Line	During Releases	1	B	OSR 7.1.1.1 [a] OSR 7.1.1.2 [b] OSR 7.1.1.7 [de] OSR 7.1.1.8 [c] OSR 7.1.1.9
2. Gross Radioactive Monitors Not Providing Automatic Termination of Release				
a. RHR Service Water System	During Releases	1	C	OSR 7.1.1.1 [a] OSR 7.1.1.3 OSR 7.1.1.4 [e] OSR 7.1.1.5 [c] OSR 7.1.1.6
b. General Service Water System	During Releases	1		
c. RHR Rupture Disc Effluent Line	During Releases	1		
3. Flow Rate Measurement Devices				
a. Liquid Radwaste Effluent Line	During Releases	1	D	OSR 7.1.1.1 [af] OSR 7.1.1.7 OSR 7.1.1.8
b. Liquid Radwaste Dilution Line	During Releases	1		

TABLE NOTATIONS

a During releases via this pathway.

b On any day on which a release is made, a SOURCE CHECK shall be made at least once, prior to the first release.

c The CHANNEL CALIBRATION shall include the use of a known radioactive source (traceable to the NIST radiation measurement system or acceptable non-NIST standards) positioned in a reproducible geometry with respect to the sensor and emitting beta or gamma radiation in the range measured by the channel. CHANNEL CALIBRATION may normally be done during refueling outages.

d The CHANNEL FUNCTIONAL TEST shall also demonstrate that automatic isolation of this pathway if the following condition exists:

1. Instrument indicates measured levels above the alarm/trip setpoint.

e The CHANNEL FUNCTIONAL TEST shall also demonstrate that control room alarm annunciation occurs if any of the following conditions exist:

1. Instrument indicates measured levels above the alarm/trip setpoint.
2. Circuit failure.
3. Instrument indicates a downscale failure.
4. Instrument controls not set in operate mode.

f CHANNEL CHECK shall consist of verifying indication of flow during periods of release. CHANNEL CHECK shall be made at least once daily on any day on which continuous, periodic, or batch releases are made.

O 6.1 RADIOACTIVE LIQUID EFFLUENT CONTROLS

O 6.1.2 Liquid Effluent Concentration

OLCO 6.1.2 The concentration of radioactive material in liquid effluent released from the site to the UNRESTRICTED AREA shall not exceed ten times the concentrations specified in 10 CFR 20, Appendix B to §§20.1001-20.2401, Table 2, Column 2.

APPLICABILITY: At all times.

ACTIONS

CONDITION	REQUIRED ACTION	COMPLETION TIME
A. Concentration of radioactive material released from site to UNRESTRICTED AREAS not within the limit.	A.1 Restore concentration to within limits.	Immediately

SURVEILLANCE REQUIREMENTS

----------NOTE----------
Refer to ODAM Table 7.1-2 for details concerning Sampling and Analysis
---

	SURVEILLANCE	FREQUENCY
OSR 7.1.2.1	Sample the Batch Release. ----------NOTE---------- Portions of each sample are "split out" and added to the Monthly and Quarterly Composite sample. ---	PRIOR TO EACH RELEASE
OSR 7.1.2.2	The results of pre-release analyses shall be used with the calculational methods in the ODAM to establish trip setpoints for batch releases to assure that the concentration at the UNRESTRICTED AREA boundary does not exceed the limit in OLCO 6.1.2.	PRIOR TO EACH RELEASE
OSR 7.1.2.3	Sample the Continuous Release during releases to the environment via this pathway. ----------NOTE---------- Portions of each sample are split out and added to the Monthly and Quarterly Composite sample. --- AND Analyze the sample from the release for Gross Beta/Gamma. OR Analyze the sample from the release for Principal Gamma Emitters and I-131. ----------NOTE---------- In the event the radioactivity concentration in the service water exceeds the LLD stated in Table 7.1-2 for the analytical method used, the activity concentration shall be determined by sampling and post-release analyses specified in Table 7.1-2, Table Items B.2 through B.5. ---	7 Days

SURVEILLANCE		FREQUENCY
OSR 7.1.2.4	Analyze the sample from the release for Principal Gamma Emitters and I-131.	PRIOR TO EACH RELEASE
OSR 7.1.2.5	Analyze the "Monthly" Composite sample for Tritium and Gross Alpha.	30 Days
OSR 7.1.2.6	Analyze the Quarterly Composite sample for Sr-89, Sr-90, Fe-55 ----------NOTE---------- For Service Water, this OSR is only required when the radioactivity concentration in the service water exceeds the LLD stated in Table 7.1-2 as determined during OSR 7.1.2.3 or OSR 7.1.2.5 ----------	92 Days

TABLE 7.1-2

RADIOACTIVE LIQUID WASTE SAMPLING AND ANALYSIS PROGRAM

Liquid Release Type	Surveillance Requirements	Table item/note	Type of Activity Analysis	Lower Limit of Detection (LLD)[a] (µCi/mL)
A. Batch Waste Release Tanks	OSR 7.1.2.1 OSR 7.1.2.4	A.1: Each Batch	Principal Gamma Emmitters[c]	5×10^{-7}
	OSR 7.1.2.2		I-131[c]	1×10^{-6}
	OSR 7.1.2.1 OSR 7.1.2.5	A.2: [d b]	H-3	1×10^{-5}
			Gross alpha	1×10^{-7}
	OSR 7.1.2.1 OSR 7.1.2.1.6	A.3: [d b]	Sr-89, Sr-90	5×10^{-8}
			Fe-55	1×10^{-6}
B. Continuous Service Water Release Sample Points: • General Services Water • RHR Service Water System A • RHR Service Water System B	OSR 7.1.2.3	B.1: [d]	Gross beta/gamma	1×10^{-7}
	OSR 7.1.2.3	B.2: [d]	Principal Gamma Emitters	5×10^{-7}
			I-131	1×10^{-6}
	OSR 7.1.2.5	B.4: [d]	H-3	1×10^{-5}
			Gross alpha	1×10^{-7}
	OSR 7.1.2.6	B.5: [d]	Sr-89, Sr-90	5×10^{-8}
			Fe-55	1×10^{-6}

TABLE NOTATIONS

a. The LLD is defined, for purposes of these controls, as the smallest concentration of radioactive material in a sample that will yield a net count, above system background, that will be detected with 95% probability with only 5% probability of falsely concluding that a blank observation represents a "real" signal.

For a particular measurement, which may include radiochemical separation:

$$LLD = \frac{4.66\ S_b}{E \times V \times 2.22E6 \times e^{-\lambda \Delta t}}$$

where:

LLD is the "a priori" lower limit of detection as defined above (microcuries per unit mass or volume)

TABLE 7.1-2 NOTATIONS (continued)

and where:

S_b is the standard deviation of the background counting rate or of the counting rate of a blank sample as appropriate (counts per minute)
E is the counting efficiency (counts per disintegration)
V is the sample size (units of mass or volume)
2.22E6 is the number of disintegrations per minute per microcurie,
Y is the fractional radiochemical yield, when applicable,
λ is the radioactive decay constant for the particular radionuclide (sec^{-1}), and
Δ t for effluents is the elapsed time between the midpoint of sample collection and the time of counting (sec^{-1}).

Alternatively, exp may be replaced by

$$\frac{\lambda t_1 e^{-\lambda t_2}}{1 - e^{-\lambda t_1}} \bullet \cdot e^{-\lambda t_2}$$

Where:

t_1 is the total sampling time or sample compositing time
t_2 is the elapsed time between the end of sample collection and the time of counting.

It should be recognized that the LLD is defined as an a priori (before the fact) limit representing the capability of a measurement system and not as an a posteriori (after the fact) limit for a particular measurement.

Analyses shall be performed in such a manner that the stated LLDs will be achieved under routine conditions with typical values of E, V, Y, and Dt for the radionuclides Mn-54, Fe-59, Co-58, Co-60, Zn-65, Mo-99, Cs-134, Cs-137, Ce-141, and Ce-144. Occasionally background fluctuations, unavoidably small sample sizes, interfering radionuclides, or other uncontrollable circumstances may render these LLDs unachievable.

When calculating the LLD for a radionuclide determined by gamma ray spectrometry, the background may include the typical contributions of other radionuclides normally present in the samples. The background count rate of a Ge(Li) detector is determined from background counts that are determined to be within the full width of the specific energy band used for the quantitative analysis for that radionuclide.

The principal gamma emitters for which the LLD specification will apply are exclusively the following radionuclides: Mn-54, Fe-59, Co-58, Co-60, Zn-65, Mo-99, Cs-134, Cs-137 and Ce-141. Ce-144 shall be measured, but with an LLD of 5E-6. This list does not mean that only these nuclides are to be detected and reported. Other peaks which are measurable and identifiable, together with the above nuclides, shall also be identified and reported. Nuclides which are below the LLD for the analyses should not be reported as being present at the LLD level. When unusual circumstances result in LLDs higher than required, the reasons shall be documented in the Annual Radioactive Material Release Report.

b. A composite sample is one in which the quantity of liquid sampled is proportional to the quantity of liquid waste discharged and in which the method of sampling employed results in a specimen which is representative of the liquids released.

c. In the event a gross β or γ analysis is performed in lieu of an isotopic analysis before a batch is discharged, a sample shall be analyzed for principal gamma emitters afterward.

d. Analysis may be performed after release.

O 6.1 RADIOACTIVE LIQUID EFFLUENT CONTROLS

O 6.1.3 Dose Due to Liquid Radioactive Effluents

OLCO 6.1.3 The dose or dose commitment to a MEMBER OF THE PUBLIC from radioactive materials in liquid effluents released to the UNRESTRICTED AREA shall not exceed:

1.5 mrem to the total body during any calendar quarter,
5.0 mrem to any organ during any calendar quarter,
3.0 mrem to the total body during any calendar year, or
10.0 mrem to any organ during any calendar year.

APPLICABILITY: At All Times

ACTIONS

CONDITION	REQUIRED ACTION	COMPLETION TIME
A. Calculated dose from the release of radioactive materials in liquid effluents exceeds limits.	A.1 Prepare and submit a Special Report to the Commission which identifies the cause(s) for exceeding the limit and defines the action to be taken.	30 days

SURVEILLANCE REQUIREMENTS

SURVEILLANCE		FREQUENCY
OSR 7.1.3.1	In any quarter in which radioactive liquid effluent is discharged, an assessment shall be performed in accordance with the ODAM in order to verify that the cumulative dose commitment does not exceed the limits in OLCO 6.1.3.	30 Days

O 6.1 RADIOACTIVE LIQUID EFFLUENT CONTROLS

O 6.1.4 Liquid Waste Treatment

OLCO 6.1.4 Appropriate liquid radwaste equipment shall be used to treat any untreated batch of liquid waste prior to discharge when a pre-released analysis indicates a radioactivity concentration (exclusive of tritium and dissolved gases) of 0.01 μCi/ml or higher.

APPLICABILITY: At all times.

ACTIONS

CONDITION	REQUIRED ACTION	COMPLETION TIME
A. Radioactive liquid waste being discharge without treatment and in excess of limits.	A.1 Prepare and submit a Special Report to the Commission which includes identification of inoperable equipment or subsystems and the reason, actions taken to restore the inoperable equipment, and description of action(s) taken to prevent recurrence.	30 days

SURVEILLANCE REQUIREMENTS

SURVEILLANCE		FREQUENCY
OSR 7.1.4.1	Each radioactive liquid waste batch shall be sampled and analyzed in accordance with Section 7.1.2 and Table 7.1-2.	PRIOR TO EACH RELEASE

O 6.1 RADIOACTIVE EFFLUENT CONTROLS

O 6.1.5 Liquid Holdup Tanks

OLCO 6.1.5 The quantity of radioactive material contained in the unprotected outdoor tanks shall be limited to less than or equal to 50 Curies, excluding tritium and dissolved or entrained noble gases.

APPLICABILITY: At all times.

ACTIONS

----------NOTE----------
Tanks included in this specification are those outdoor tanks that are not surrounded by liners, dikes, or walls capable of holding the tanks' contents and that do not have tank overflows and surrounding area drains connected to the liquid radwaste treatment system. (The liquid radwaste storage tanks (1T-88 and 1T-269) located in the Low-Level Radwaste Processing and Storage Facility are considered unprotected outdoor tanks.)

CONDITION	REQUIRED ACTION	COMPLETION TIME
A. Quantity of radioactive material in the tanks exceeding the limit.	A.1 Suspend all additions of the radioactive material to the tanks.	Immediately
	AND	
	A.2 Reduce tank contents to within the limit.	48 hours
	AND	
	A.3 Describe in next Annual Radioactive Effluent Release Report the events leading to this condition.	1 year

SURVEILLANCE REQUIREMENTS

SURVEILLANCE		FREQUENCY
OSR 7.1.5.1	When radioactive materials are being added to a tank, the quantity of radioactive material contained in all tanks shall be determined to be within the 50 curie limit by analyzing a representative sample of the tanks' contents.	7 Days

O 6.2 RADIOACTIVE GASEOUS EFFLUENT CONTROLS

O 6.2.1.1 Radioactive Gaseous Effluent Instrumentation

OLCO 6.2.1.1 The Radioactive Gaseous Effluent Instrumentation for each function in Table 6.2-1 shall be OPERABLE

APPLICABILITY: During releases via this pathway.

ACTIONS

CONDITION	REQUIRED ACTION		COMPLETION TIME
A. One or more channels inoperable.	A.1	Enter the condition referenced in Table 6.2-1 for the channel.	Immediately
	AND		
	A.2	Restore required channel(s) to OPERABLE status.	30 days
B. As required by Required Action A.1 and referenced in Table 6.2-1	B.1	Collect gaseous grab sample.	once per 8 hours
	AND		
	B.2	Analyze sample for radioactivity.	Within 24 hours of sample collection
C. As required by Required Action A.1 and referenced in Table 6.2-1	C.1	Establish preplanned alternate monitoring method.	8 hours
	OR		
	C.2.1	Collect gaseous grab sample.	once per 8 hours
	AND		
	C.2.2	Analyze sample for radioactivity.	Within 24 hours of sample collection
D. As required by Required Action A.1 and referenced in Table 6.2-1	D.1	Establish continuous sampling with auxiliary equipment.	8 hours
	AND		
	D.2	Collect sample(s)	Once per 7 days
	AND		

ACTIONS (continued)

CONDITION	REQUIRED ACTION		COMPLETION TIME
	D.3	Analyze sample(s) for radioactivity.	Within 24 hours of sample collection
E. As required by Required Action A.1 and referenced in Table 6.2-1	E.1	Estimate flow rate initially and whenever operation of a main exhaust fan combination is changed in the system.	8 Hours
F. As required by Required Action A.1 and referenced in Table 6.2-1	F.1	Collect gaseous grab sample.	once per 24 hours
	AND		
	F.2	Analyze sample for radioactivity.	Within 24 hours of sample collection
G. Minimum required instrumentation not returned to OPERABLE status within 30 days.	G.1	Explain in next Annual Radioactive Material Release Report why the instrument was not made operable in a timely manner.	

SURVEILLANCE REQUIREMENTS

NOTE

Instrumentation shall be OPERABLE and in service except that channels out of service are permitted for the purpose of required tests, checks and calibrations without declaring the channel to be inoperable.

SURVEILLANCE		FREQUENCY
OSR 7.2.1.1.1	Perform CHANNEL CHECK NOTE During releases via this pathway.	24 Hours
OSR 7.2.1.1.2	Perform CHANNEL CHECK	7 Days
OSR 7.2.1.1.3	Perform SOURCE CHECK	30 Days
OSR 7.2.1.1.4	Determine the monitor setpoints in accordance with the method described in the ODAM.	92 Days
OSR 7.2.1.1.5	Perform CHANNEL FUNCTIONAL TEST	92 Days
OSR 7.2.1.1.6	Determine the monitor setpoints in accordance with the method described in the ODAM.	18 Months
OSR 7.2.1.1.7	Perform CHANNEL CALIBRATION	18 Months

TABLE 6.2-1 / 7.2-1 NORMAL RANGE RADIOACTIVE GASEOUS EFFLUENT MONITORING INSTRUMENTATION			
Instrument	Minimum Channels Operable [a b]	Conditions Referenced from Required Action A.1	Surveillance Requirements
1.Offgas Stack Monitoring System			
a. Noble Gas Activity Monitor	1	C	OSR 7.2.1.1.1, OSR 7.2.1.1.3 OSR 7.2.1.1.4, OSR 7.2.1.1.5[d], OSR 7.2.1.1.7[c]
b. Iodine Sampler Cartridge	1	D	OSR 7.2.1.1.2
c. Particulate Sampler Filter	1	D	OSR 7.2.1.1.2
d. Effluent Flow Measuring Device	1	E	OSR 7.2.1.1.1, OSR 7.2.1.1.5, OSR 7.2.1.1.7
e. Sample Flow Measuring Device	1	E	OSR 7.2.1.1.1, OSR 7.2.1.1.5, OSR 7.2.1.1.7
2. Reactor Building Exhaust Vent Monitoring System			
a. Noble Gas Activity Monitor	1	B	OSR 7.2.1.1.1, OSR 7.2.1.1.3, OSR 7.2.1.1.5[d], OSR 7.2.1.1.6, OSR 7.2.1.1.7[c]
b. Iodine Sampler Cartridge	1	D	OSR 7.2.1.1.2
c. Particulate Sampler Filter	1	D	OSR 7.2.1.1.2
d. Effluent Flow Measuring Device	1	E	OSR 7.2.1.1.1, OSR 7.2.1.1.5, OSR 7.2.1.1.7
e. Sample Flow Measuring Device	1	E	OSR 7.2.1.1.1, OSR 7.2.1.1.5, OSR 7.2.1.1.7
3. Turbine Building Exhaust Vent Monitoring System			
a. Noble Gas Activity Monitor	1	B	OSR 7.2.1.1.1, OSR 7.2.1.1.3, OSR 7.2.1.1.5[d], OSR 7.2.1.1.6, OSR 7.2.1.1.7[c]
b. Iodine Sampler Cartridge	1	D	OSR 7.2.1.1.2
c. Particulate Sampler Filter	1	D	OSR 7.2.1.1.2
d. Effluent Flow Measuring Device	1	E	OSR 7.2.1.1.1, OSR 7.2.1.1.5, OSR 7.2.1.1.7
e. Sample Flow Measuring Device	1	E	OSR 7.2.1.1.1, OSR 7.2.1.1.5, OSR 7.2.1.1.7
4. Low-Level Radwaste Processing and Storage Facility Exhaust Vent Monitoring System			
a. Noble Gas Activity Monitor	1	F	OSR 7.2.1.1.1, OSR 7.2.1.1.3 OSR 7.2.1.1.5[d], OSR 7.2.1.1.6 OSR 7.2.1.1.7[c]
b. Iodine Sampler Cartridge	1	D	OSR 7.2.1.1.2
c. Particulate Sampler Filter	1	D	OSR 7.2.1.1.2
d. Effluent Flow Measuring Device	1	E	OSR 7.2.1.1.1, OSR 7.2.1.1.5, OSR 7.2.1.1.7
e. Sample Flow Measuring Device	1	E	OSR 7.2.1.1.1, OSR 7.2.1.1.5, OSR 7.2.1.1.7

TABLE 6.2-1 NOTATIONS

a During releases via this pathway.

b Instrumentation shall be OPERABLE and in service except that channels out of service are permitted for the purpose of required tests, checks and calibrations without declaring the channel to be inoperable.

c The CHANNEL CALIBRATION shall include the use of a known radioactive source (traceable to the NIST radiation measurement system or other acceptable non-NIST standards) positioned in a reproducible geometry with respect to the sensor and emitting beta and/or gamma radiation in the range measured by the channel in accord with established station calibration procedures. Alternately, after the initial calibration, noble gas activity monitors maybe calibrated by laboratory analyzed gas samples collected and analyzed per Table 7.2-2, item A.

d The CHANNEL FUNCTIONAL TEST shall also demonstrate that control room alarm annunciation occurs if any of the following conditions exist:

1.0 Instrument indicates measured levels above the alarm setpoint.
2.0 Circuit failure.
3.0 Instrument indicates a downscale failure.
4.0 Deleted.

O 6.2 RADIOACTIVE GASEOUS EFFLUENT CONTROLS

O 6.2.1.2 Offgas Radioactive Gaseous Effluent Instrumentation

OLCO 6.2.1.2 The Offgas Radioactive Gaseous Effluent Instrumentation for each Function in Table 6.2-2 shall be OPERABLE

APPLICABILITY: When the Offgas system is operating.

ACTIONS

CONDITION	REQUIRED ACTION		COMPLETION TIME
A. One or more channels inoperable.	A.1	Enter the Condition referenced in table 6.2-2 for the channel.	Immediately
B. As required by Required Action A.1 and referenced in Table 6.2-2	B.1	Verify the charcoal bed of the offgas system is not bypassed.	Immediately
	AND		
	B.2	Verify offgas stack noble gas activity monitor is operable.	Immediately
	AND		
	B.3	Restore channel(s) to OPERABLE status.	30 Days

ACTIONS (continued)

CONDITION	REQUIRED ACTION	COMPLETION TIME
C. As required by Required Action A.1 and referenced in Table 6.2-2	C.1 Verify the charcoal bed of the offgas system is not bypassed.	Immediately
	AND	
	C.2.1 Obtain a gas grab sample.	Once per 7 Days
	AND	
	C.2.2 Analyze the grab sample.	24 Hours
	AND	
	C.3.1 Verify offgas stack noble gas activity monitor is operable.	Immediately
	OR	
	C.3.2 Verify one post-treatment monitor is OPERABLE.	Immediately
	AND	
	C.4 Restore channel(s) to OPERABLE status.	30 Days
D. Required Action and associated Completion Time of Condition B or C not met.	D.1 Be in Mode 3.	24 Hours

SURVEILLANCE REQUIREMENTS

----------NOTE----------

Instrumentation shall be OPERABLE and in service except that channels out of service are permitted for the purpose of required tests, checks and calibrations without declaring the channel to be inoperable.

SURVEILLANCE		FREQUENCY
OSR 7.2.1.2.1	Perform CHANNEL CHECK	24 Hours
OSR 7.2.1.2.2	Perform SOURCE CHECK	30 Days
OSR 7.2.1.2.3	Perform CHANNEL FUNCTIONAL TEST	92 Days
OSR 7.2.1.2.4	Determine the monitor setpoints in accordance with the method described in the ODAM.	92 Days
OSR 7.2.1.2.5	Perform CHANNEL CALIBRATION	18 Months

TABLE 6.2-2

RADIATION MONITORING INSTRUMENTATION

Instrumentation	Minimum Channels Operable	Conditions Referenced from Required Action A.1	Surveillance Requirements
Offgas Post-Treatment Radiation Monitors [a]	1	B	OSR 7.2.1.2.1, OSR 7.2.1.2.2, OSR 7.2.1.2.3[e], OSR 7.2.1.2.4, OSR 7.2.1.2.5
Offgas Pre-Treatment Radiation Monitors [b]	1	C	OSR 7.2.1.2.1, OSR 7.2.1.2.2, OSR 7.2.1.2.3[e], OSR 7.2.1.2.4, OSR 7.2.1.2.5

TABLE 6.2.2 NOTATIONS

(a) The monitors shall be set to initiate immediate closure of the charcoal bed bypass valve at a setting equivalent to or below the dose rate limits in ODAM Section 6.2.2.1.

(b) The monitors shall be set to initiate an alarm if the monitor exceeds a trip setting equivalent to 1.0 Ci/sec of noble gases after 30 minutes delay in the offgas holdup line.

(e) The CHANNEL FUNCTIONAL TEST for this instrument shall also demonstrate that control room alarm annunciation occurs if any of the following conditions exist:
a. Instrument indicates measured levels above the alarm/trip setpoint.
b. Instrument indicates a downscale failure.
c. Instrument controls not set in operate mode.

O 6.2 RADIOACTIVE GASEOUS EFFLUENT DOSE RATE

O 6.2.2 Gaseous Effluent Dose Rate

OLCO 6.2.2

The dose rate in the UNRESTRICTED AREA due to the release of gaseous effluents shall not exceed:

a. 500 mrem/year to the total body or 3000 mrem/year to skin due to radioactive noble gas; and
b. 1500 mrem/year to any organ due to I-131, I-133, H-3, and to radioactive particulates having half-lives of 8 days or more.

APPLICABILITY: During Releases.

ACTIONS

CONDITION	REQUIRED ACTION	COMPLETION TIME
A. Dose rate not within limits.	A.1 Reduce the release rate within limit.	Immediately

SURVEILLANCE REQUIRMENTS

NOTE
*Refer to ODAM Table 7.2-2 for details concerning Sampling and Analysis

SURVEILLANCE		FREQUENCY
OSR 7.2.2.1	Monitor for Radioactive Noble Gas gamma activity.	Continuously
OSR 7.2.2.2	Sample the Effluent Stream for I-131. AND Analyze for I-131 within 48 hours of sample pull.	Continuously 7 Days AND Following an increase of more than 50% as indicated by the Post-Treat rad. monitor*
OSR 7.2.2.3	Sample the Effluent Stream for particulates. AND Analyze for principal gamma emitters from particulates within 48 hours of sample pull*. NOTE Retain samples for Quarterly Composite analysis. (OSR 7.2.2.8)	Continuously 7 Days AND Following an increase of more than 50% as indicated by the Post-Treat rad. monitor*
OSR 7.2.2.4	Perform gas grab sample of the effluent stream and analyze for principal gamma emitters.	30 Days

SURVEILLANCES (continued)

SURVEILLANCE		FREQUENCY
OSR 7.2.2.5	Perform gas grab sample of the effluent stream and analyze for principal gamma emitters. ----------NOTE---------- Applies only for the Reactor Building and Off gas Stack effluent streams. ----------	Following an increase of more than 50% as indicated by the Post-Treat rad. monitor
OSR 7.2.2.6	Perform grab sample of the effluent stream and analyze for Tritium.	92 Days
OSR 7.2.2.7	Perform grab sample of the effluent stream and analyze for Tritium. ----------NOTE---------- Applies only for the Reactor Building and Off gas Stack effluent streams. ----------	When the Reactor Head is removed
OSR 7.2.2.8	Analyze Particulate Composite sample for Sr-89, Sr-90, Gross Alpha	92 Days

*Refer to ODAM Table 7.2-2 for details concerning Sampling and Analysis

TABLE 7.2-2				
RADIOACTIVE GASEOUS WASTE SAMPLING AND ANALYSIS PROGRAM				
Gaseous Release Type	Surveillance Requirements	Frequency	Type of Activity Analysis	Lower Limit of Detection (LLD)[a]
A. Offgas Stack, and Reactor Building Vent	OSR 7.2.2.5 [b]	Elevated Post-Treat Readings [b]	Gas Grab Sample Principal Gamma Emitters	1×10^{-4} [d]
	OSR 7.2.2.7 [c]	Reactor Head Removed [c]	Tritium Grab Sample (H-3)	1×10^{-6}
B. Offgas Stack, Reactor Building Vent, Turbine Building Vent, and Low-Level Radwaste Processing Storage Facility Vent	OSR 7.2.2.2 [e]	Routine OR elevated Post-Treat Readings [f]	Charcoal Sample I-131	1×10^{-12}
	OSR 7.2.2.3 [e]	Routine OR elevated Post-Treat Readings [f]	Particulate Sample Principal Gamma Emitters (I-131, Others)	1×10^{-11} [d]
	OSR 7.2.2.4	Routine	Gas Grab Sample Principal Gamma Emitters	1×10^{-4} [d]
	OSR 7.2.2.6	Routine	Tritium Grab Sample (H-3)	1×10^{-6}
	OSR 7.2.2.8 [e]	Routine [g]	Composite Particulate Sample Sr-89, Sr-90 Gross Alpha	1×10^{-11} 1×10^{-11}
C. Offgas Stack, Reactor Building Vent, Turbine Building Vent, and Low-Level Radwaste Processing and Storage Facility	OSR 7.2.2.1	Continuous	Monitor Radioactive Noble Gas gamma activity	1×10^{-6}

TABLE NOTATIONS

a See Table 7.1-2 for a definition of the lower limit of detection (LLD).

b Monthly analyses shall be performed following an increase of more than 50% in the steady state releases as indicated by the post-treat noble gas activity monitor, after factoring out the effect due to a change in reactor power, or other minor temporary fluctuations not related to fuel integrity such as line up changes for condensate de-mineralizers or reactor water cleanup.

c A H-3 grab sample will also be taken from the Offgas Stack or Reactor Building Vent when the reactor head is removed.

d The principal gamma emitters for which the LLD will apply are exclusively the following radionuclides: Kr-87, Kr-88, Xe-133, Xe-133m, Xe-135, and Xe-138 for gaseous emissions and Mn-54, Fe-59, Co-58, Co-60, Zn-65, Mo-99,Cs--134, Cs-137, Ce-141 and Ce-144 for particulate emissions. This list does not mean that only these nuclides are to be detected and reported. Other peaks which are measurable and identifiable, together with the above nuclides, shall also be identified and reported. Nuclides which are below the LLD may be reported as "less than" their respective LLD and should not be reported as being present at the LLD of the nuclide. Each measured radionuclide concentration is used in a required concentration or dose calculation only if it is detected at or above the LLD. When unusual circumstances persist more than 30 days and cause LLD higher than required, the reasons shall be documented in the Annual Radioactive Material Release Report.

e The ratio of the sample flow rate to the sampled stream flow rate shall be known for the time period covered by each dose or dose rate calculations made in accordance with Sections 6.2.2, 6.2.3, and 6.2.4.

f Sample media shall be changed at least once per seven days and the analysis completed within 48 hours after changing (or after removal from the sampler). Analyses shall also be performed within 48 hours following an increase of more than 50% in the steady state release as indicated by the post-treat noble gas activity monitor, after factoring out the effect due to a change in reactor power. When samples collected for 24 hours or less are analyzed, the corresponding LLD may be increased by a factor of 10.

g A quarterly composite sample shall include an equal fraction of each weekly particulate sample collected during the quarter.

O 6.2 RADIOACTIVE GASEOUS EFFLUENT CONTROLS

O 6.2.3 Doses Due to Noble Gases

OLCO 6.2.3 The Air Dose in the UNRESTRICTED AREA due to noble gases released in gaseous effluents shall not exceed:

5.0 mrad from gamma radiation during any calendar quarter;
10.0 mrad from beta radiation during any calendar quarter;
10.0 mrad from gamma radiation during any calendar year; or
20.0 mrad from beta radiation during any calendar year.

APPLICABILITY: During Releases

ACTIONS

CONDITION	REQUIRED ACTION	COMPLETION TIME
A. Calculated air dose not within limits.	A.1 Submit a Special Report to the NRC identifying the cause(s) for exceeding the limit and define the corrective actions taken.	30 days

SURVEILLANCE REQUIREMENTS

SURVEILLANCE		FREQUENCY
OSR 7.2.3.1	An assessment shall be performed in accordance with the ODAM to verify that the cumulative air dose during the quarter and year due to noble gases does not exceed the limits in ODAM section 6.2.3.	30 Days

O 6.2 RADIOACTIVE GASEOUS EFFLUENT CONTROLS

O 6.2.4 Doses Due to Iodine and Particulates in Air

OLCO 6.2.4 The dose to a MEMBER OF THE PUBLIC from Iodine-131, I-133, H-3, and from radionuclides in particulate form having half-lives greater than eight days in gaseous effluents released from the site to the UNRESTRICTED AREA shall not exceed:

7.5 mrem to any organ during any calendar quarter; or
15.0 mrem to any organ during any calendar year.

APPLICABILITY: During Releases.

ACTIONS

CONDITION	REQUIRED ACTION	COMPLETION TIME
A. Calculated dose not within limits.	A.1 Submit a Special Report to the NRC identifying the cause(s) for exceeding the limit and define the corrective actions taken.	30 days

SURVEILLANCE REQUIREMENTS

SURVEILLANCE		FREQUENCY
OSR 7.2.4.1	An assessment shall be performed in accordance with the ODAM to verify that the cumulative dose commitment due to I-131, I-133, H-3, and radioactive particulates having half-lives greater than eight days in gaseous effluents does not exceed the limits in ODAM Section 6.2.4.	30 Days

O 6.2 RADIOACTIVE GASEOUS EFFLUENT CONTROLS

O 6.2.5 Gaseous Radwaste Treatment

OLCO 6.2.5 At least one train of charcoal beds in the Offgas System shall be placed in operation to treat radioactive gases from the main condenser.

APPLICABILITY: During Offgas System operation.

ACTIONS

CONDITION	REQUIRED ACTION	COMPLETION TIME
A. No Offgas System charcoal beds in service. ---------NOTE-------- Not applicable until after 4 hours of commencing operation of the main condenser air ejector. ----------	A.1 Restore Offgas System charcoal bed to service.	7 days
B. Required Action and associated Completion Time not met.	B.1 Submit a Special Report to the NRC identifying the inoperable equipment or subsystem and reason for inoperability, actions taken to prevent a recurrence.	30 days

SURVEILLANCE REQUIREMENTS

SURVEILLANCE		FREQUENCY
OSR 7.2.5.1	The gaseous effluent monitoring systems of ODAM Sections 6.2.1 and 7.2.1 shall be used to verify the operation of the Offgas system.	N/A

O 6.2 RADIOACTIVE GASEOUS EFFLUENT CONTROLS

O 6.2.6 Mechanical Vacuum Pump Radiation Release Rate

OLCO 6.2.6 During mechanical vacuum pump operation the release rate of gross activity except for halogens and particulates with half lives longer than eight days shall not exceed 1 curies/sec.

APPLICABILITY: During mechanical vacuum pump operation.

ACTIONS

CONDITION	REQUIRED ACTION	COMPLETION TIME
A. Radioactive release rate not within limit.	A.1 Restore radioactive release rate to within limits.	Immediately

SURVEILLANCE REQUIREMENTS

SURVEILLANCE		FREQUENCY
OSR 7.2.6.1	The gaseous effluent monitoring systems of ODAM Sections 6.2.1 and 7.2.1 shall be used to verify the operation of the Offgas system.	N/A

O 6.3 OFFSITE DOSE ASSESSMENT CONTROLS

O 6.3.1 Dose

OLCO 6.3.1 The annual dose or dose commitment to any MEMBER OF THE PUBLIC due to radiation and radioactive material in effluents from DAEC shall not exceed 75 mrem to the thyroid or 25 mrem to the total body or any other organ.

APPLICABILITY: At all times.

ACTIONS

CONDITION	REQUIRED ACTION	COMPLETION TIME
A. Calculated dose from radioactive material released in liquid or gaseous effluents exceeds twice the limits of Sections 6.1.3, 6.2.3 or 6.2.4	A.1 Perform an assessment of compliance with 40 CFR 190 and 10 CFR 72.104 and limit subsequent releases such that the dose or dose commitment to a MEMBER OF THE PUBLIC is ≤75 mrem to his thyroid and ≤25 mrem to his total body or any other organ over 12 consecutive months including the period of elevated release.	7 days
B. The estimated dose exceeds either limit in Section 6.3.1.	B.1 Prepare and submit a Special Report to the NRC in lieu of any other report; it shall include the cause of the release of exposure, an estimate of the dose to the likely most exposed MEMBER(s) OF THE PUBLIC, corrective actions taken or planned to prevent a recurrence, and a schedule for achieving compliance. If the condition causing the limit(s) to be exceeded has not been corrected, the Special Report may also state a request for a variance in accordance with the provisions of 40 CFR Part 190. In that event, the request is timely and a variance is granted until NRC action on the request is complete.	30 days

SURVEILLANCE REQUIREMENTS

SURVEILLANCE		FREQUENCY
OSR 7.3.1.1	Cumulative dose contributions from liquid and gaseous effluents to a MEMBER OF THE PUBLIC offsite shall be evaluated as described in the ODAM.	12 Months

O 6.3 OFFSITE DOSE ASSESSMENT CONTROLS

O 6.3.2 Radiological Environmental Monitoring Program

OLCO 6.3.2 A radiological environmental monitoring program shall be conducted as specified in Table 6.3-1.

APPLICABILITY: At all times.

ACTIONS

CONDITION	REQUIRED ACTION	COMPLETION TIME
A. Deviation from Table 6.3-1	A.1 Deviations are permitted from Table 6.3-1 if specimens are unobtainable due to hazardous conditions, seasonal unavailability, malfunction of automatic sampling equipment and other legitimate reasons. If specimens are unobtainable due to sampling equipment malfunction, every effort shall be made to complete corrective action prior to the end of the next sampling period. All deviations from Table 6.3-1 shall be documented in the Annual Radiological Environmental Report.	Once per year
B. In the event radioactivity in a sampled environmental medium, averaged over a calendar quarter, is attributable to DAEC and exceeds an appropriate value listed in Table 6.3-3 or, if not listed, causes a potential annual dose exceeding two times the quarterly dose limit in Section 6.1.3 or 6.2.4	B.1 Prepare and submit to the Commission within 30 days after discovery a Special Report which includes an evaluation of any release conditions, environmental factors or other conditions which caused the value(s) of Table 6.3-3 or two times the quarterly dose limit to be exceeded and which defines the corrective actions to be taken. If the radioactivity in environmental sample(s) is not attributable to releases from the Station, the Special Report is not required. Instead, the sample(s) result(s) shall be reported and explained in the Annual Radiological Environmental Report.	30 Days

ACTIONS (continued)

CONDITION	REQUIRED ACTION	COMPLETION TIME
C. When environmental sampling medium is not available from a sampling location or the location is no longer appropriate.	C.1 The cause and the location where replacement samples were obtained and/or will be obtained shall be reported in the Annual Radiological Environmental Report.	Once per year
D. A location is identified at which the calculated personal dose associated with one or more exposure pathways exceeds by 20% the maximum calculated dose associated with like pathway(s) at a location where sampling is conducted as specified by Table 6.3-1	D.1 The pathway(s) having maximum exposure potential at the newly identified location will be added to the radiological monitoring program at a subsequent Operations Committee meeting, if samples are reasonably attainable at the new location. Like pathway(s) monitored (sampled) at a location, excluding the control station location(s), having a lesser associated calculated personal dose may be deleted from the program at the time the new pathway(s) and location are added.	Once per year

SURVEILLANCE REQUIREMENTS

	SURVEILLANCE	FREQUENCY
OSR 7.3.2.1	Sampling and analyses required in Table 6.3-1 shall be performed such that the detection capabilities specified in Table 6.3-2 are achieved under routine conditions. If a sample analysis does not meet the LLD specified, report the reason attributed in the next Annual Radiological Environmental Report.	12 Months
OSR 7.3.2.2	DAEC shall conduct annually a land use census within three miles of the Station to identify radiologically important changes in land use.	12 Months

TABLE 6.3-1
RADIOLOGICAL ENVIRONMENTAL MONITORING PROGRAM

Exposure Pathway and/or Sample Type	Minimum Number of Sampling Stations	Sampling and Collection Frequency	Type and Frequency of Analysis
Airborne Particulates	Five	Continuous operation of sampler with sample collection at least once per week or as required by dust loading	Analyze for gross beta activity ≥ 24 hours after filter change. Perform gamma isotopic analysis on each sample having gross beta activity > 10 times the yearly mean of control samples. Perform gamma isotopic analysis on composite (by sampling location) of samples collected during each quarter
Airborne Iodine	Five	Continuous operation of sampler with sample collection at least once a week	Analyze each cartridge for I-131.
Ambient Radiation	Thirty-nine	One dosimeter at each point continuously. Change at least once per quarter.	Read gamma radiation dose quarterly.
Surface Water	Two	At least once per month.	Gamma isotopic analysis of each sample or monthly composite (by location). Tritium analysis of a composite (by location) at least once per quarter.
Ground Water (potable)	Four	At least once per quarter. (May be composited if collected more frequently.)	Analyze quarterly for tritium and gross beta activity; if gross beta > 10 times the yearly mean of control samples, analyze for SR-89, SR-90, and gamma isotopic.
River Sediment	One	At least once every six months	Gamma isotopic analysis of each sample.
Milk	Two	At least once every two weeks (biweekly) during the grazing season. At least once per month during non-grazing season.	Gamma isotopic and I-131 analysis of each sample.
Fish	Two	Two times per year. (Once during January through July and once during August thru December.)	Gamma isotopic analysis on edible portion.
Vegetation	Three	Annually at harvest time. One sample of each: grain green leafy vegetation forage.	Gamma isotopic analysis on edible portion.
	One	One sample of broadleaf vegetation at time of harvest	I-131 analysis

TABLE 6.3-2						
MAXIMUM VALUES OF THE LOWER LIMIT OF DETECTION FOR ENVIRONMENTAL SAMPLE ANALYSIS [a]						
Analysis	Medium					
	Water (pCi/L)	Airborne Particulate or Gas (pCi/m^3)	Fish (pCi/kg, wet)	Milk (pCi/1)	Food Procucts (pCi/kg, wet)	Sediment (pCi/kg, dry)
Gross beta	4	1×10^{-2}				
H-3	2000 [b] 3000 [c]					
Mn-54	15		130			
Fe-59	30		260			
Co-58, Co-60	15		130			
Zn-65	30		260			
Zr-95	30					
Nb-95	15					
I-131	1 [d]	7×10^{-2}		1	60	
Cs-134	15	5×10^{-2}	130	15	60	150
Cs-137	18	6×10^{-2}	150	18	80	180
Ba-140	60			60		
La-140	15			15		

TABLE NOTATIONS Table 6.3-2

a. The LLD is defined, for purposes of these specifications, as the smallest concentration of radioactive material in a sample that will yield a new count, above system background, that will be detected with 95% probability with only 5% probability of falsely concluding that a blank observation represents a "real" signal.

For a particular measurement, which may include radiochemical separation

$LLD = (4.66S_b)/(E \cdot V \cdot 2.22 \cdot Y \cdot e^{-\lambda\Delta t})$

where:

- LLD is the lower limit of detection as defined above (picocuries per unit mass or volume)
- Sb is the standard deviation of the background counting rate or of the counting rate of a blank sample as appropriate (counts per minute)
- E is the counting efficiency (counts per disintegration)
- V is the sample size (units of mass or volume)
- 2.22 is the number of disintegrations per minute per picocurie,
- Y is the fractional radiochemical yield, when applicable,
- λ is the radioactive decay constant for the particular radionuclide, and D
- t for environmental samples is the elapsed time between sample collection, or end of the sample collection period, and time of counting

Analyses shall be performed in such a manner that the stated LLDs will be achieved under routine conditions. With typical values of E, V, Y, and Δt for the radionuclides named in the Table. Occasionally background fluctuations, unavoidably small sample sizes, the presence of interfering nuclides, or other uncontrollable circumstances may render these LLDs unachievable. In such cases, the contributing factors shall be identified and described in the Annual Radiological Environmental Report.

When a radionuclide attributable to DAEC but not listed in this table is measured it shall be reported.

b. For Drinking Water.

c. For samples of water not used as a source of drinking water.

d. If no drinking water pathway exists, a value of 15 pCi/l may be used.

TABLE 6.3-3					
REPORTING LEVELS FOR RADIOACTIVITY CONCENTRATIONS IN ENVIRONMENTAL SAMPLES					
Reporting Levels [a]					
Analysis	Water (pCi/liter)	Airborne Particulate or Gases (pCi/m^3)	Fish (pCi/Kg, wet)	Milk (pCi/liter)	Food Products (pCi/Kg, wet)
H-3	2×10^4 [b] 3×10^4 [c]				
Mn-54	1×10^3		3×10^4		
Fe-59	4×10^2		1×10^4		
Co-58	1×10^3		3×10^4		
Co-60	3×10^2		1×10^4		
Zn-65	3×10^2		2×10^4		
Zr-Nb95	4×10^2 [c]				
I-131	2 [d]	0.9		3	1×10^2
Cs-134	30	10	1×10^3	60	1×10^3
Cs-137	50	20	2×10^3	70	2×10^3
Ba-La140	2×10^2 [e]			3×10^2 [e]	

TABLE NOTATIONS Table 6.3-3

a. The reporting level is exceeded when one or more radionuclides are detected in a sample and $\Sigma[(\text{concentration})/(\text{reporting level})] \geq 1$.

b. For drinking water samples. This is 40 CFR Part 141 value.

c. For samples of water not used as a source of drinking water.

d. If no drinking water pathway exists, a value of 20 pCi/l may be used.

e. Concentration of parent or daughter.

BASES SECTION 6.1 / 7.1

6.1.1 /7.1.1 Radioactive Liquid Effluent Instrumentation

The radioactive liquid effluent instrumentation is provided to monitor and control, as applicable, the release of radioactive material in liquid effluents. The OPERABILITY and use of these instruments implements the requirements of 10 CFR Part 50, Appendix A, General Design Criteria 60, 63, and 64. The alarm and/or trip setpoints for these instruments are calculated in the manner described in the ODAM to assure that the alarm and/or trip will occur before ten times the values specified in 10 CFR Part 20.2001 - 20.2401, Appendix B are exceeded. Instrumentation is expected to be OPERABLE and in service when required by controls. An instrument may be removed from service voluntarily for the purpose of tests, checks, or calibration, without declaring the channel inoperable.

The radwaste effluent line radiation monitor recorder RR3972 is not required in order to comply with the controls stated in the ODAM. It is provided for recording trends during a release and need not be maintained OPERABLE - i.e. calibrated and functionally tested - other than during a release.

BASES SECTION 6.1 / 7.1

6.1.2 / 7.1.2 Liquid Effluent Concentration

The basic requirements concerning effluents from nuclear power are stated in 10 CFR 50.36a. These requirements indicate that compliance with Technical Specifications will keep average annual releases of radioactive material in effluents to a small percentage of the limits specified in 10 CFR 20.106. These (new 10 CFR 20.1301) requirements further indicate that operational flexibility is allowed, compatible with considerations of health and safety, which may temporarily result in releases higher than such small percentages, but still within the limits specified in the old 10 CFR 20.106. These referenced concentrations are specific values which relate to an annual average dose of 500 millirems.

As stated in the Introduction to Appendix B of the new 10 CFR 20, the liquid effluent concentrations limits, given in the appendix, are based on an annual dose of 50 millirem. Prior to the issuance of the revision to Part 20, a release concentration corresponding to a limiting dose of 500 millirem had been acceptable as a TS limit for liquid effluents. The limit was applicable at all times and has been used to provide assurance that the limits of 10 CFR 50 Appendix I were not likely to be exceeded. Since the limits of 10 CFR 50 are the ultimate value to which a license must adhere, and since the old concentration limits adequately provide such assurance, it should not be necessary to reduce this limit by a factor of 10.

Conformance with the dose limits in section 6.1.3 will necessitate average annual liquid effluent concentrations being below those specified in 10 CFR 20.1001 - 20.2401 Appendix B to §§ 20.1001-20.2401.

Demonstrating compliance with section 6.1.3 will result in a de facto demonstration of compliance with 10 CFR 20 limits.

The sample points noted in Table 7.1-2 are adequate to ensure sampling of potential liquid radioactive effluents from the service water systems. The sample points include the General Service Water System and the RHR Service Water Systems A and B. The sample point for the RHR Service Water Systems is at a location downstream of the point where Emergency Service Water discharge joins with the RHR Service Water System, and upstream of the point where the RHR Rupture Disc Line branches off of the RHR Service Water System. This sample point will therefore provide for sampling effluents from the RHR Service Water System, Emergency Service Water System and/or RHR Rupture Disc Line.

BASES SECTION 6.1 / 7.1

6.1.3 / 7.1.3

1. Dose Due to Radioactive Effluents

Section 6.1.3, 6.2.3 and 6.2.4 implement the requirements of 10 CFR Part 50.36a and of 10 CFR Part 50, Appendix I, Section IV. These sections keep levels of radioactive materials in LWR effluents as low as is reasonably achievable. Compliance with these sections will also keep average releases of radioactive material to effluent at small percentages of the limits specified in 10 CFR Part 20.106. Surveillance requirements provide for the measurement of releases and calculation of doses to verify compliance with the controls. Action statements in these sections implement the requirements of 10 CFR Part 50.36(c)(2) and 10 CFR Part 50, Appendix I, Section IV.A in the event a control is not met.

2. Liquid Effluents

With the implementation of Section 6.1.3, there is reasonable assurance that Station operation will not cause a radionuclide concentration in public drinking water taken from the River that exceeds the standard for anthropogenic radioactivity in community drinking water. The equations in the ODAM for calculating doses due to measured releases of radioactive material in liquid effluent are consistent with the methodology in Regulatory Guide 1.109 and 1.113. The assessment of personal doses will examine potential exposure pathways including, as appropriate, consumption of fish and water taken from the River downstream of the discharge canal.

6.1.4 / 7.1.4 Liquid Waste Treatment

This section implements the requirements of 10 CFR Part 50.36a (a)(1) that operating procedures be established and followed and that equipment be maintained and used to keep releases to the environment as low as is reasonably achievable. The section intends that appropriate portions of the system which were used to establish compliance with the design objectives in 10 CFR Part 50, Appendix I, Section II be used when specified to provide reasonable assurance that releases of radioactive material in liquid effluent will be kept as low as is reasonably achievable. The components in the liquid radwaste system which are appropriate to process liquid waste in order to satisfy Section 7.1.4 are the floor drain demineralizer and the radwaste demineralizer. The activity concentration, µCi/mL, below which liquid radwaste treatment would not be cost-beneficial, and therefore not required, is demonstrated below. The quantity of radioactive material in liquid effluent released annually from the DAEC has been calculated to be:

total iodines	0.11 curie
total others (less H3)	0.25
Total	0.36 curie

The population dose commitment resulting from the radioactive material in liquid effluent released annually has been calculated to be*

thyroid	0.164 man rem
total body	0.114
Total	0.278 man rem

Therefore, population doses are about 1.5 man rem per curie of iodine released and about 0.5 man rem per curie of other radionuclides (less H3) released in liquids. On the basis of gross activity, the population dose is about one man rem per curie released in liquids.

The volume of liquid waste processed and intended for discharge is estimated to be:

Low Purity Waste	5700 gal/day = 1.8 x 106 gal/yr
Chemical Waste	600 gal/day = 1.9 x 105 gal/yr

Since the same DAEC equipment is used to process both streams, the total volume to be processed is about 2 x 106 gal/yr. The annual cost to operate the radwaste processing equipment, based on Dirty Waste Ion Exchange operation, has been estimated* (neglecting credit for capital recovery) to be $88,000 per year. Thus the unit volume operating cost is about:

$$\frac{\$88{,}000/yr}{2\ x\ 10^6\ gal/yr} = \$0.05/gal$$

Thus the operating cost to treat a 4000 gallon batch of chemical waste by ion exchange would be about $200. The operating cost to treat a 10000 gallon batch of floor drain waste by ion exchange would be about $500. Assuming the cost-benefit balance is $1000 expenditure per man rem reduced and assuming treatment removes all radioactivity from the liquid, then

(1) the activity concentration in a Chemical Waste batch below which treatment is not cost-beneficial is

$$C = \frac{\$200}{4000\ gal\ x\ 3785\ \frac{ml}{gal}}\ x\ \frac{1\ curie}{man\ rem}\ x\ \frac{10^6\ \mu Ci}{curie}\ x\ \frac{1\ man\ rem}{\$1000}$$

$$C = 0.013\ \mu Ci/ml$$

6.1.4 / 7.1.4 (continued)

(2) the activity concentration in a batch of Floor Drain Waste below which treatment is not cost-beneficial is

$$C = \frac{\$500}{10000\,gal \times 3785\,\frac{ml}{gal}} \times \frac{1\,curie}{man\,rem} \times \frac{10^6\,\mu Ci}{curie} \times \frac{1\,man\,rem}{\$1000}$$

$$C = 0.013\,\mu Ci/ml$$

Liquid waste treatment with the evaporator at DAEC has been shown to be neither cost-beneficial nor necessary to comply with 10 CFR 50 Appendix I, Section II. Consequently, liquid radwaste treatment to achieve an activity concentration below 0.01 µCi/mL in liquid effluent is not justified.

6.1.5 / 7.1.5 Liquid Holdup Tanks

The tanks listed in the specification include all liquid radwaste tanks (1T-88 and 1T-269) located in the Low-Level Radwaste Processing Facility (LLRPSF). Because the LLRPSF is not seismically designed, these tanks are considered as outdoor tanks that are not surrounded by liners, dikes, or walls capable of holding the tanks' contents.

Restricting the quantity of radioactive material contained in the specified tanks provides assurance that in the event of an uncontrolled release of the tanks' contents, the resulting concentrations would be less than the limits of 10 CFR 20, Appendix B to 20.1001 - 20.2401, Table 2, Column 2, at the nearest potable water supply in an UNRESTRICTED AREA.

BASES SECTION 6.2 / 7.2

6.2.1 /7.2.1 Radioactive Gaseous Effluent Instrumentation

The radioactive gaseous effluent instrumentation is provided to monitor the release of radioactive materials in gaseous effluents and, as appropriate, to control potential releases. The presence of instruments for monitoring radioactive effluents is depicted in ODAM Figure 3-1. The OPERABILITY and use of these instruments implements the requirements of 10 CFR Part 50, Appendix A, General Design Criteria 60, 63, and 64.

Reactor building exhaust ventilation shaft radiation monitors initiate isolation of the reactor building normal ventilation and start standby gas treatment when a high trip point is reached.

DAEC is equipped with a radioactive gaseous effluent monitoring system which includes detectors at the offgas stack (R3), the reactor building vent (R4), the turbine building vent (R5), and the LLRPSF vent (R7). A remote indication and control unit located near each detector displays the detector reading and, whenever the setpoint is exceeded, an indicator light. The data are also routed to a control computer and a control room display, but do not cause a trip to isolate the ventilated area. In the event the control computer and/or control room display fail to function or are voluntarily taken out of service, each remote indication and control unit is designed to acquire data for up to 30 hours. It is intended that each affected remote indication and control unit display be observed at least once per 24 hours (in which case the affected channel remains OPERABLE).

If an alarm trip setpoint is exceeded at the same time the control computer and/or control room display are neither functioning nor in service, alarm annunciation will still occur in the control room. In the event the detector reading and the indication of exceeding the monitor setpoint are not provided at either the control room or the remote indication and control unit, then the affected channel is not OPERABLE and DAEC will either perform the appropriate ACTION or will provide an alternate monitoring system. This permits DAEC to retain the GE gaseous monitoring system as an alternate system for normal effluent monitoring when the Kaman system is temporarily inoperable. When used as an alternate monitoring system, the GE system is subject to the requirements stated in Sections 6.2.1 and 7.2.1 and to LLD requirements stated in Table 7.2-2, Note d.

Two air ejector offgas post-treatment monitors are provided. They are designed so that an instrument failure gives a downscale trip or an inoperative trip. When both instruments reach an upscale trip point, or when one reaches an upscale and the other reaches a downscale trip point or inoperative, a trip is actuated. The post-treatment monitors have three upscale trip setpoints. The lower level upscale trip (high) will initiate charcoal bed valve closure. (CV-4134A opening and CV-4134B closing to route offgas through the charcoal.) The intermediate and upper trip points (high-high and high-high-high) are for alarm only.

BASES SECTION 6.2 / 7.2

2. Not used

3. Gaseous Effluents

Assessments of dose required by Sections 7.2.3 and 7.2.4 to verify compliance with Appendix I, Section IV are based on measured radioactivity in gaseous effluent and on calculational methods stated in the ODAM. Pathways of exposure and location of individuals are selected such that the dose to a nearby resident is unlikely to be underestimated. Dose assessment methodology described in the ODAM for gaseous effluent will be consistent with the methodology in Regulatory Guides 1.109 and 1.111. Cumulative and projected assessments of dose made during a quarter are based on historical average meteorological conditions measured at DAEC. Assessment made for the annual radiological environmental report will be based on annual averages of atmospheric conditions during the period of release.

BASES SECTION 6.2 / 7.2

6.2.2 / 7.2.2 Gaseous Effluent Concentration

The basic requirements concerning effluents from nuclear power are stated in 10 CFR 50.36a. These requirements indicate that compliance with Technical Specifications will keep average annual releases of radioactive material in effluents to a small percentage of the limits specified in 10 CFR 20. These (new 10 CFR 20.1301) requirements further indicate that operational flexibility is allowed, compatible with considerations of health and safety, which may temporarily result in releases higher than such small percentages, but still within the limits specified in the old 10 CFR 20.106. These referenced concentrations are specific values which relate to an annual average dose of 500 millirems.

As stated in the Introduction to Appendix B of the new 10 CFR 20, the gaseous effluent concentration limits given in the appendix are based on an annual dose of 50 millirem for isotopes for which inhalation or ingestion is limiting or 100 millirem for isotopes for which submersion (noble gases) is limiting. Prior to the issuance of the revision to Part 20 a release concentration corresponding to limiting dose rates less than or equal to 500 mrem/yr to the whole body, 3000 mrem/yr to the skin from noble gases, and 1500 mrem/yr to any organ from iodine, and tritium, had been acceptable as a TS limit for airborne effluents. This limit was applicable at all times and had been used to provide assurance that the limits of 10 CFR 50 Appendix I and 40 CFR 190 were not likely to be exceeded.

Since the limits of 10 CFR 50 Appendix I and 40 CFR 90 are more restrictive than 10 CFR 20, and because the dose limits specified have been successfully used to assure compliance with these regulations, it should not be necessary to reduce the dose rate basis to 50 or 100 millirem.

Conformance with the dose limits of 7.3.1 will necessitate the average annual airborne effluent concentrations being below those specified in 10 CFR 20 Appendix B. Demonstrating compliance with section 6.3.1 will result in a de facto demonstration of compliance with 10 CFR 20 limits. Assessment of compliance is based upon an effluents measurement program defined in Table 7.2-2 and methodology stated in the ODAM. The resolving time of the measurements, ie., the sample integration time, bounds the minimum averaging time of the effluent measurements waste streams. The Standby Gas Treatment System is considered an Engineered Safety Feature and not an exhaust ventilation treatment system. Thus the exhaust ventilation system discharges via the reactor building vent.

6.2.3 / 7.2.3 Doses due to Noble Gases

These specifications implement the requirements of 10 CFR Part 50, Appendix I.

6.2.4 / 7.2.4 Doses due to Iodine and Particulates in Air

These specifications implement 10 CFR Part 50, Appendix I. The dose calculation methods in the ODAM depend on existing pathways of exposure to a member of the public or more conservative conditions assumed (yielding a higher calculated dose). Calculations and methods are such that an estimate of the dose to a member of the public is not likely to be underestimated substantially.

BASES SECTION 6.2 / 7.2

6.2.5 / 7.2.5 Gaseous Radwaste Treatment

This specification implements the requirement of 10 CFR Part 50.36a(a)(1) that operating procedures be established and followed and that equipment be maintained and used to keep releases to the environment as low as is reasonably achievable. In order to satisfy Section 6.2.5, every reasonable effort shall be made to maintain and operate at least one train of the Offgas System charcoal adsorbers with pre- and aft-particulate filters to process radioactive gaseous effluent prior to release. The specification that the Offgas System which was used to establish compliance with the design objectives in 10 CFR Part 50, Appendix I, Section II be used when specified provides reasonable assurance that the releases of radioactive materials in gaseous effluents will be kept as low as is reasonably achievable.

ODAM Figure 3-1 is a flow diagram depicting gaseous radioactive waste streams. The Standby Gas Treatment System is considered an Engineered Safety Feature and not an exhaust ventilation treatment system.

BASES SECTION 6.3 / 7.3

6.3.1 /7.3.1 Dose

Section 6.3.1 is provided to comply with the dose limitation requirement of 40 CFR 190. This section requires the assessment of dose to demonstrate that a person (a nearby resident) has not received a radiation dose exceeding that specified in 40 CFR 190 including doses from direct radiation. There is no other licensed nuclear fuel cycle facility within 50 miles of DAEC, thus it is assumed that the dose from other uranium fuel cycle facilities is negligible. In the event a report is required to satisfy Action b, it shall be deemed adequate to satisfy the reporting requirement in Section 8.2.2.

By demonstrating compliance with 40 CFR 190, DAEC will be, de facto, in compliance with the dose limits specified in 10 CFR 20.1301 and 10 CFR 72.104. Such a position is in keeping with that stated by the NRC in the preamble to the revised 10 CFR 20 (56 CFR 23360).

6.3.2 / 7.3.2 Radiological Environmental Monitoring

The radiological environmental monitoring program, including the land use census, is conducted to satisfy the requirements of 10 CFR Part 50, Appendix I, Section IV.B.2 and .3. The minimum radiological monitoring program required by this specification provides measurements of radiation and of radioactive materials in those exposure pathways and for those radionuclides which lead to the highest potential radiation exposures of individuals resulting from the station operation. This monitoring program thereby supplements the radiological effluent monitoring program by verifying that the measurable concentrations of radioactive materials and levels of radiation are not higher than expected on the basis of the effluent measurements and modeling of the environmental exposure pathways.

The land use census is conducted annually to identify changes in use of the UNRESTRICTED AREA in order to recommend modifications in monitoring programs for evaluating individual doses from principal exposure pathways. It may be conducted by door-to-door survey, by aerial survey, or by consulting with local agricultural or governmental authorities.

In order that radiological environmental monitoring stations may be relocated to reflect current conditions, the locations of stations required by Table 6.3-1 are described in the Offsite Dose Assessment Manual. Revisions thereto are administered in accordance with TS 5.5.1 and ODAM 8.3.1. DAEC may conduct additional environmental monitoring exclusive of the requirements of Sections 6.3.2 and 6.4.2.

8.0 ADMINISTRATIVE CONTROLS

8.1 PROGRAMS AND MANUALS

8.1.1 RADIOACTIVE EFFLUENT CONTROLS PROGRAM

This program, conforming to 10 CFR 50.36a, provides for the control of radioactive effluents and for maintaining the doses to members of the public from radioactive effluents as low as reasonably achievable. The program shall be contained in the ODAM, shall be implemented by procedures, and shall include remedial actions to be taken whenever the program limits are exceeded. The program shall include the following elements.

a. Limitations on the functional capacity of radioactive liquid and gaseous monitoring instrumentation including surveillance tests and setpoint determination in accordance with the methodology in the ODAM;

b. Limitations on the concentrations of radioactive material released in liquid effluents from the site to UNRESTRICTED AREAs, conforming to ten times (10x) the concentrations listed in Appendix B, Table 2, Column 2 to 10 CFR 20.1001 - 20.2402;

c. Monitoring, sampling, and analysis of radioactive liquid and gaseous effluents pursuant to 10 CFR 20.1302 and with the methodology and parameters in the ODAM conforming to 10CFR50, Appendix I;

d. Limitations on the annual and quarterly doses or dose commitment to a member of the public from radioactive materials in liquid effluents released to UNRESTRICTED AREAs;

e. Determination of cumulative and projected dose contributions from radioactive effluents for the current calendar quarter and current calendar year in accordance with the methodology and parameters in the ODAM at least every 30 days;

f. Limitations on the functional capability and use of the liquid and gaseous effluent treatment systems to ensure that the appropriate portions of these systems which were used to establish compliance with the design objectives in 10 CFR 50, Appendix I, Section II be used when specified to provide reasonable assurance that releases of radioactive material in liquid and gaseous effluents be kept as low as reasonably achievable;

g. Limitations on the dose rate resulting from radioactive material released in gaseous effluents to areas at or beyond the site boundary shall be limited to the following:

   1. For noble gases: less than or equal to a dose rate of 500 mrem/yr to the whole body and less than or equal to a dose rate of 3000 mrem/yr to the skin, and

   2. For iodine-131, iodine-133, tritium, and for all radionuclides in particulate form with half lives > 8 days:; less than or equal to a dose rate of 1500 mrem/yr to any organ;

h. Limitations on the annual and quarterly air doses resulting from noble gases released in gaseous effluents to areas beyond the site boundary, conforming to 10 CFR 50, Appendix I;

I. Limitations on the annual and quarterly doses to a member of the public from iodine-131, iodine-133, tritium, and all radionuclides in particulate form with half lives > 8 days in gaseous effluents released to areas beyond the site boundary, conforming to 10 CFR 50, Appendix I; and

j. Limitations on the annual dose or dose commitment to any member of the public due to releases of radioactivity and to radiation from uranium fuel cycle sources, conforming to 40 CFR 190 and 10 CFR 72.104.

8.1.2 THE RADIOLOGICAL ENVIRONMENTAL MONITORING PROGRAM

The Radiological Environmental Monitoring Program is described in section 5 of the ODAM. Specifications for implementation are located in section 6.3.2

8.1.3 INTERLABORATORY COMPARISON PROGRAM

Analyses shall be performed on radioactive materials supplied in an Interlaboratory Comparison Program which has been approved by the NRC.

In the event analyses were not performed as required in Section 8.1.3, report the corrective actions taken to prevent a recurrence in the Annual Radiological Environmental Report.

The requirement for participation in an Interlaboratory Comparison Program is provided to ensure that independent checks on the precision and accuracy of the measurements of radioactive material in environmental sample matrices are performed as part of the quality assurance program for environmental monitoring in order to demonstrate that the results are reasonably valid.

8.2 REPORTING REQUIREMENTS

8.2.1 ANNUAL RADIOACTIVE MATERIAL RELEASE REPORT

(1) A report of radioactive materials released from the Station shall be submitted to the NRC on or before May 1 of each year in accordance with 10 CFR 50.36a. Each report shall include the information specified in item (2) below covering the preceding twelve months.

(2) An Annual Radioactive Material Release Report shall include a summary by calendar quarter of the quantities of radioactive liquid and gaseous effluents and radioactive solid waste released from the Station. The data on radioactive liquid and gaseous effluents should be reported in the format in Tables 8.2-1 and 8.2-2. The data on radioactive solid waste should include:

1. classification of the waste (per 10 CFR Part 61)
2. total volume shipped
3. total radioactive material shipped (curies)
4. identification of principal radionuclides
5. solidification agent
6. physical description of the waste

(3) A summary description of any changes to the ODAM.

(4) A summary of meteorological data collected during the year will be submitted in the annual report following January 1. Alternatively, summary meteorological data may be retained by DAEC and made available to the NRC upon request.

(continued)

TABLE 8.2-1			
ANNUAL RADIOACTIVE MATERIAL RELEASE REPORT (YEAR) LIQUID EFFLUENTS			
Nuclides Released	Unit	Quarter	Quarter
strontium-89	Ci	. E	. E
strontium-90	Ci	. E	. E
cesium-134	Ci	. E	. E
cesium-137	Ci	. E	. E
iodine-131	Ci	. E	. E
cobalt-58	Ci	. E	. E
cobalt-60	Ci	. E	. E
iron-55	Ci	. E	. E
iron-59	Ci	. E	. E
zinc-65	Ci	. E	. E
manganese-54	Ci	. E	. E
chromium-51	Ci	. E	. E
zirconium-niobium-95	Ci	. E	. E
molybdenum-99	Ci	. E	. E
technetium-99m	Ci	. E	. E
barium-lanthanum-140	Ci	. E	. E
cerium-141	Ci	. E	. E
Other (specify)	Ci	. E	. E
	Ci	. E	. E
	Ci	. E	. E
	Ci	. E	. E
	Ci	. E	. E
Total for period (above)	Ci	. E	. E
xenon-133	Ci	. E	. E
xenon-135	Ci	. E	. E

TABLE 8.2-2			
ANNUAL RADIOACTIVE MATERIAL RELEASE REPORT (YEAR) GASEOUS EFFLUENTS			
Nuclides Released	Unit	Quarter	Quarter
1. Fission gases			
krypton-85	Ci	. E	. E
krypton-85m	Ci	. E	. E
krypton-87	Ci	. E	. E
krypton-88	Ci	. E	. E
xenon-133	Ci	. E	. E
xenon-135	Ci	. E	. E
xenon-135m	Ci	. E	. E
xenon-138	Ci	. E	. E
Others (specify)	Ci	. E	. E
	Ci	. E	. E
	Ci	. E	. E
Total for period	Ci	. E	. E
2. Iodines			
iodine-131	Ci	. E	. E
iodine-133	Ci	. E	. E
iodine-135	Ci	. E	. E
Total for period	Ci	. E	. E
3. Particulates			
strontium-89	Ci	. E	. E
strontium-90	Ci	. E	. E
cesium-134	Ci	. E	. E
cesium-137	Ci	. E	. E
barium-lanthanum-140	Ci	. E	. E
Others (specify)	Ci	. E	. E
	Ci	. E	. E

8.2.2 ANNUAL RADIOLOGICAL ENVIRONMENTAL REPORT

An annual report of radiological environmental surveillance activities required by Section 6.3.2 shall be submitted to the NRC on or before May 1 of each year. Each report shall be consistent with the objectives outlined in the ODAM, and with 10 CFR 50, Appendix I, Sections IV.B.2, IV.B.3, and IV.C. The report shall include the following information:

(1) A summary description of the radiological environmental monitoring program required by Section 6.3.2.
(2) A map and a table of distances and directions of locations of sampling stations required in Table 6.3-1.
(3) A summary of the land use census required in Section 7.3.2.2.
(4) Results of analyses of samples required by the radiological environmental monitoring program, Table 6.3-1. In the event some results are not available, the reasons shall be explained in the report. In the event the missing results are obtained, they shall be submitted in a supplementary report as soon as is reasonable.
(5) An assessment of radiation doses to a MEMBER OF THE PUBLIC likely to be the most exposed due to radioactive liquid and gaseous effluents released from DAEC during the year. The assessment shall be performed as described in the ODAM.
(6) Deleted.
(7) Results of participation in the Interlaboratory Comparison Program.
(8) Deviation from environmental sampling schedule.
(9) A report of all analyses in which the LLD, required by Table 6.3-2, was not achieved.
(10) A report of any changes in sample locations.

8.2.3 SPECIAL REPORTS

Special reports shall be submitted to the Director of Inspection and Enforcement Regional Office within the time period specified for each report. These reports shall be submitted covering the activities identified below pursuant to the requirements of the applicable reference specification.

1. Radioactive Liquid or Gaseous Effluent - calculated dose exceeding specified limit (ODAM Sections 6.1.3, 6.2.3, and 6.2.4).

2. Off-Gas System inoperable (ODAM Section 6.2.5).

3. Measured levels of radioactivity in an environmental sampling medium determined to exceed the reporting level values of ODAM Table 6.3-3 when averaged over any calendar quarter sampling period (ODAM Section 6.3.2).

4. Annual dose to a MEMBER OF THE PUBLIC determined to exceed 40 CFR Part 190 dose limit (ODAM Section 6.3.1.1).

5. Radioactive liquid waste release without treatment when activity concentration is equal to or greater than 0.01 μCi\mL (ODAM Section 6.1.4).

6. Liquid Holdup Tank Instrumentation Inoperable (ODAM Section 6.1.6).

8.3.1 CHANGES TO THE ODAM

a. Shall be documented and records of reviews performed shall be retained for the duration of the facility operating license. This documentation shall contain:
   1) Sufficient information to support the change together with the appropriate analyses or evaluations justifying the change(s) and:
   2) A determination that the change will maintain the level of radioactive effluent control required by 10 CFR 20.1302, 40 CFR Part 190, 10 CFR 72.104, 10 CFR 50.36a, and Appendix I to 10 CFR Part 50 and not adversely impact the accuracy or reliability of effluent dose or setpoint calculations.

b. Shall become effective after review and acceptance by the Operations Committee and approval by the DAEC Plant Manager.

c. Shall be submitted to the commission in the form of a complete, legible copy of the entire ODAM as a part of or concurrent with the Annual Radioactive Material Release Report for the period of the report in which any change to the ODAM was made. Each change shall be identified by markings in the margin of the affected pages, clearly indicating the area of the page that was changed, and shall indicate the date the change was implemented.

APPENDIX A: DOSE TRANSFER FACTORS FOR AIRBORNE PATHWAYS

Environmental pathway models have been solved on the bases of unit radionuclide release in effluent (1 Ci/yr) and unit atmospheric dispersion (1 sec/m^3) or deposition (1/m^2) to derive dose transfer factors for airborne effluent. The dose transfer factors in this appendix were computed with the GASPAR II computer program[a], using default values of parameters applicable to the most exposed members of the public as recommended in Regulatory Guide 1.109, revision 1, with the following exceptions.

- Significant revisions of data since publication of the Regulatory Guide 1.109, revision 1 and incorporated into GASPAR II were employed. Data differing from those in the Regulatory Guide 1.109 are identified in GASPAR II documentation.[b]

- After publishing Reg. Guide 1.109, the NRC recommended that soil-to-plant bioaccumulation factors, B_{iv}, of cesium and strontium be changed.[c] The revised values were used to derive dose transfer factors tabulated for Sr89, Sr90, and Cs137.

- Values of environmental transit time recommended in Reg. Guide 1.109,[d] namely 1440 hr from harvest of stored vegetables to ingestion, were retained in lieu of default values in GASPAR II.[e]

These factors affected dose transfer factors more than 10% only for H3, Sr89, Sr90, Cs137, Ce141, and Ce144.

Dose transfer factors from C14 via inhalation and from Kr90 via irradiation by an airborne cloud are the same as in the previous MIDAS library since GASPAR II does not produce them. Skin dose transfer factors are assumed to be the same as total body dose transfer factors for H3 and C14 in exposure pathways involving inhalation or ingestion also because GASPAR II does not calculate them.

---

[a] Strenge, D.L., et. al., GASPAR II - Technical Reference and User Guide, NUREG/CR-4653, March 1987

[b] Ibid., 3.3.1.1, 3.3.2.3

[c] USNRC, SECY-79-653A, January 30, 1980.

[d] Regulatory Guide 1.109, rev. 1, Table E-15

[e] Strenge, et. al., p. C.3.

Dose transfer factors are included hereafter for the following parameters.

Pathway	Age Group	Organ
Inhalation	Adult	Total Body
Ground irradiation	Teenager	GI tract
Grass-cow-milk	Child	Bone
Grass-goat-milk	Infant	Liver
Grass-cow-meat		Kidney
Vegetables, leafy + produce		Thyroid
Plume irradiation		Lung
		Skin

DOSE TRANSFER FACTORS FOR RADIONUCLIDES IN EFFLUENT AIR
Computed by GASPAR II

AGE = ADULT
PATHWAY = INHALATION

	TOTAL BODY	GI-LLI	BONE	LIVER	KIDNEY	THYROID	LUNG	SKIN
				(mrem m^2)/Ci				
H 3	2.28E+01	2.28E+01	0.00E-01	2.28E+01	2.28E+01	2.28E+01	2.28E+01	2.28E+01
C 14	1.08E+02	1.08E+02	5.76E+02	1.08E+02	1.08E+02	1.08E+02	1.08E+02	0.00E-01
AR 41	0.00E-01	0.00E-01	0.00E-01	0.00E-01	0.00E-01	0.00E-01	0.00E-01	0.00E-01
KR 83m	0.00E-01	0.00E-01	0.00E-01	0.00E-01	0.00E-01	0.00E-01	0.00E-01	0.00E-01
KR 85m	0.00E-01	0.00E-01	0.00E-01	0.00E-01	0.00E-01	0.00E-01	0.00E-01	0.00E-01
KR 85	0.00E-01	0.00E-01	0.00E-01	0.00E-01	0.00E-01	0.00E-01	0.00E-01	0.00E-01
KR 87	0.00E-01	0.00E-01	0.00E-01	0.00E-01	0.00E-01	0.00E-01	0.00E-01	0.00E-01
KR 88	0.00E-01	0.00E-01	0.00E-01	0.00E-01	0.00E-01	0.00E-01	0.00E-01	0.00E-01
KR 89	0.00E-01	0.00E-01	0.00E-01	0.00E-01	0.00E-01	0.00E-01	0.00E-01	0.00E-01
KR 90	0.00E-01	0.00E-01	0.00E-01	0.00E-01	0.00E-01	0.00E-01	0.00E-01	0.00E-01
XE131m	0.00E-01	0.00E-01	0.00E-01	0.00E-01	0.00E-01	0.00E-01	0.00E-01	0.00E-01
XE133m	0.00E-01	0.00E-01	0.00E-01	0.00E-01	0.00E-01	0.00E-01	0.00E-01	0.00E-01
XE133	0.00E-01	0.00E-01	0.00E-01	0.00E-01	0.00E-01	0.00E-01	0.00E-01	0.00E-01
XE135m	0.00E-01	0.00E-01	0.00E-01	0.00E-01	0.00E-01	0.00E-01	0.00E-01	0.00E-01
XE135	0.00E-01	0.00E-01	0.00E-01	0.00E-01	0.00E-01	0.00E-01	0.00E-01	0.00E-01
XE137	0.00E-01	0.00E-01	0.00E-01	0.00E-01	0.00E-01	0.00E-01	0.00E-01	0.00E-01
XE138	0.00E-01	0.00E-01	0.00E-01	0.00E-01	0.00E-01	0.00E-01	0.00E-01	0.00E-01
CR 51	3.17E+00	1.05E+02	0.00E-01	0.00E-01	7.23E-01	1.89E+00	4.56E+02	0.00E-01
MN 54	2.00E+02	2.45E+03	0.00E-01	1.25E+03	3.12E+02	0.00E-01	4.44E+04	0.00E-01
FE 59	3.36E+02	5.96E+03	3.74E+02	8.81E+02	0.00E-01	0.00E-01	3.23E+04	0.00E-01
CO 58	6.56E+01	3.36E+03	0.00E-01	5.01E+01	0.00E-01	0.00E-01	2.94E+04	0.00E-01
CO 60	4.69E+02	9.03E+03	0.00E-01	3.64E+02	0.00E-01	0.00E-01	1.89E+05	0.00E-01
ZN 65	1.48E+03	1.70E+03	1.03E+03	3.26E+03	2.19E+03	0.00E-01	2.74E+04	0.00E-01
SR 89	2.76E+02	1.11E+04	9.63E+03	0.00E-01	0.00E-01	0.00E-01	4.44E+04	0.00E-01
SR 90	1.83E+04	2.29E+04	9.10E+05	0.00E-01	0.00E-01	0.00E-01	3.04E+05	0.00E-01
ZR 95	7.38E+02	4.75E+03	3.39E+03	1.09E+03	1.72E+03	0.00E-01	5.61E+04	0.00E-01
SB124	3.93E+02	1.29E+04	9.89E+02	1.87E+01	0.00E-01	2.40E+00	7.86E+04	0.00E-01
CS134	2.31E+04	3.30E+02	1.18E+04	2.69E+04	9.10E+03	0.00E-01	3.09E+03	0.00E-01
CS136	3.49E+03	3.71E+02	1.24E+03	4.63E+03	2.71E+03	0.00E-01	3.80E+02	0.00E-01
CS137	1.36E+04	2.66E+02	1.52E+04	1.97E+04	7.07E+03	0.00E-01	2.38E+03	0.00E-01
BA140	8.14E+01	6.91E+03	1.24E+03	1.56E+00	5.29E-01	0.00E-01	4.02E+04	0.00E-01
CE141	4.85E+01	3.80E+03	6.31E+02	4.28E+02	1.99E+02	0.00E-01	1.15E+04	0.00E-01
CE144	5.83E+03	2.59E+04	1.09E+05	4.53E+04	2.69E+04	0.00E-01	2.47E+05	0.00E-01
I 131	6.50E+02	1.99E+02	7.99E+02	1.13E+03	1.94E+03	3.77E+05	0.00E-01	0.00E-01
I 133	1.43E+02	2.81E+02	2.74E+02	4.69E+02	8.21E+02	6.81E+04	0.00E-01	0.00E-01

DOSE TRANSFER FACTORS FOR RADIONUCLIDES IN EFFLUENT AIR
Computed by GASPAR II

AGE = ADULT
PATHWAY = GROUND PLANE

	TOTAL BODY	GI-LLI	BONE	LIVER	KIDNEY	THYROID	LUNG	SKIN
				(mrem m^2)/Ci				
H 3	0.00E-01	0.00E-01	0.00E-01	0.00E-01	0.00E-01	0.00E-01	0.00E-01	0.00E-01
C 14	0.00E-01	0.00E-01	0.00E-01	0.00E-01	0.00E-01	0.00E-01	0.00E-01	0.00E-01
AR 41	0.00E-01	0.00E-01	0.00E-01	0.00E-01	0.00E-01	0.00E-01	0.00E-01	0.00E-01
KR 83m	0.00E-01	0.00E-01	0.00E-01	0.00E-01	0.00E-01	0.00E-01	0.00E-01	0.00E-01
KR 85m	0.00E-01	0.00E-01	0.00E-01	0.00E-01	0.00E-01	0.00E-01	0.00E-01	0.00E-01
KR 85	0.00E-01	0.00E-01	0.00E-01	0.00E-01	0.00E-01	0.00E-01	0.00E-01	0.00E-01
KR 87	0.00E-01	0.00E-01	0.00E-01	0.00E-01	0.00E-01	0.00E-01	0.00E-01	0.00E-01
KR 88	0.00E-01	0.00E-01	0.00E-01	0.00E-01	0.00E-01	0.00E-01	0.00E-01	0.00E-01
KR 89	0.00E-01	0.00E-01	0.00E-01	0.00E-01	0.00E-01	0.00E-01	0.00E-01	0.00E-01
KR 90	0.00E-01	0.00E-01	0.00E-01	0.00E-01	0.00E-01	0.00E-01	0.00E-01	0.00E-01
XE131m	0.00E-01	0.00E-01	0.00E-01	0.00E-01	0.00E-01	0.00E-01	0.00E-01	0.00E-01
XE133m	0.00E-01	0.00E-01	0.00E-01	0.00E-01	0.00E-01	0.00E-01	0.00E-01	0.00E-01
XE133	0.00E-01	0.00E-01	0.00E-01	0.00E-01	0.00E-01	0.00E-01	0.00E-01	0.00E-01
XE135m	0.00E-01	0.00E-01	0.00E-01	0.00E-01	0.00E-01	0.00E-01	0.00E-01	0.00E-01
XE135	0.00E-01	0.00E-01	0.00E-01	0.00E-01	0.00E-01	0.00E-01	0.00E-01	0.00E-01
XE137	0.00E-01	0.00E-01	0.00E-01	0.00E-01	0.00E-01	0.00E-01	0.00E-01	0.00E-01
XE138	0.00E-01	0.00E-01	0.00E-01	0.00E-01	0.00E-01	0.00E-01	0.00E-01	0.00E-01
CR 51	1.47E+05	1.47E+05	1.47E+05	1.47E+05	1.47E+05	1.47E+05	1.47E+05	1.74E+05
MN 54	4.37E+07	4.37E+07	4.37E+07	4.37E+07	4.37E+07	4.37E+07	4.37E+07	5.13E+07
FE 59	8.65E+06	8.65E+06	8.65E+06	8.65E+06	8.65E+06	8.65E+06	8.65E+06	1.01E+07
CO 58	1.20E+07	1.20E+07	1.20E+07	1.20E+07	1.20E+07	1.20E+07	1.20E+07	1.41E+07
CO 60	6.81E+08	6.81E+08	6.81E+08	6.81E+08	6.81E+08	6.81E+08	6.81E+08	8.02E+08
ZN 65	2.36E+07	2.36E+07	2.36E+07	2.36E+07	2.36E+07	2.36E+07	2.36E+07	2.72E+07
SR 89	6.85E+02	6.85E+02	6.85E+02	6.85E+02	6.85E+02	6.85E+02	6.85E+02	7.95E+02
SR 90	0.00E-01	0.00E-01	0.00E-01	0.00E-01	0.00E-01	0.00E-01	0.00E-01	0.00E-01
ZR 95	7.76E+06	7.76E+06	7.76E+06	7.76E+06	7.76E+06	7.76E+06	7.76E+06	9.03E+06
SB124	1.90E+07	1.90E+07	1.90E+07	1.90E+07	1.90E+07	1.90E+07	1.90E+07	2.19E+07
CS134	2.17E+08	2.17E+08	2.17E+08	2.17E+08	2.17E+08	2.17E+08	2.17E+08	2.53E+08
CS136	4.75E+06	4.75E+06	4.75E+06	4.75E+06	4.75E+06	4.75E+06	4.75E+06	5.39E+06
CS137	3.26E+08	3.26E+08	3.26E+08	3.26E+08	3.26E+08	3.26E+08	3.26E+08	3.80E+08
BA140	6.50E+05	6.50E+05	6.50E+05	6.50E+05	6.50E+05	6.50E+05	6.50E+05	7.45E+05
CE141	4.34E+05	4.34E+05	4.34E+05	4.34E+05	4.34E+05	4.34E+05	4.34E+05	4.88E+05
CE144	2.21E+06	2.21E+06	2.21E+06	2.21E+06	2.21E+06	2.21E+06	2.21E+06	2.55E+06
I 131	2.73E+05	2.73E+05	2.73E+05	2.73E+05	2.73E+05	2.73E+05	2.73E+05	3.33E+05
I 133	3.90E+04	3.90E+04	3.90E+04	3.90E+04	3.90E+04	3.90E+04	3.90E+04	4.72E+04

DOSE TRANSFER FACTORS FOR RADIONUCLIDES IN EFFLUENT AIR
Computed by GASPAR II

AGE = ADULT
PATHWAY = COW-MILK

	TOTAL BODY	GI-LLI	BONE	LIVER	KIDNEY	THYROID	LUNG	SKIN
				$(mrem.m^2)/Ci$				
H 3	1.39E+01	1.39E+01	0.00E-01	1.39E+01	1.39E+01	1.39E+01	1.39E+01	1.39E+01
C 14	2.33E+03	2.33E+03	1.16E+04	2.33E+03	2.33E+03	2.33E+03	2.33E+03	2.33E+03
AR 41	0.00E-01	0.00E-01	0.00E-01	0.00E-01	0.00E-01	0.00E-01	0.00E-01	0.00E-01
KR 83m	0.00E-01	0.00E-01	0.00E-01	0.00E-01	0.00E-01	0.00E-01	0.00E-01	0.00E-01
KR 85m	0.00E-01	0.00E-01	0.00E-01	0.00E-01	0.00E-01	0.00E-01	0.00E-01	0.00E-01
KR 85	0.00E-01	0.00E-01	0.00E-01	0.00E-01	0.00E-01	0.00E-01	0.00E-01	0.00E-01
KR 87	0.00E-01	0.00E-01	0.00E-01	0.00E-01	0.00E-01	0.00E-01	0.00E-01	0.00E-01
KR 88	0.00E-01	0.00E-01	0.00E-01	0.00E-01	0.00E-01	0.00E-01	0.00E-01	0.00E-01
KR 89	0.00E-01	0.00E-01	0.00E-01	0.00E-01	0.00E-01	0.00E-01	0.00E-01	0.00E-01
KR 90	0.00E-01	0.00E-01	0.00E-01	0.00E-01	0.00E-01	0.00E-01	0.00E-01	0.00E-01
XE131m	0.00E-01	0.00E-01	0.00E-01	0.00E-01	0.00E-01	0.00E-01	0.00E-01	0.00E-01
XE133m	0.00E-01	0.00E-01	0.00E-01	0.00E-01	0.00E-01	0.00E-01	0.00E-01	0.00E-01
XE133	0.00E-01	0.00E-01	0.00E-01	0.00E-01	0.00E-01	0.00E-01	0.00E-01	0.00E-01
XE135m	0.00E-01	0.00E-01	0.00E-01	0.00E-01	0.00E-01	0.00E-01	0.00E-01	0.00E-01
XE135	0.00E-01	0.00E-01	0.00E-01	0.00E-01	0.00E-01	0.00E-01	0.00E-01	0.00E-01
XE137	0.00E-01	0.00E-01	0.00E-01	0.00E-01	0.00E-01	0.00E-01	0.00E-01	0.00E-01
XE138	0.00E-01	0.00E-01	0.00E-01	0.00E-01	0.00E-01	0.00E-01	0.00E-01	0.00E-01
CR 51	8.08E+02	2.03E+05	0.00E-01	0.00E-01	1.78E+02	4.85E+02	1.07E+03	0.00E-01
MN 54	4.06E+04	6.53E+05	0.00E-01	2.13E+05	6.34E+04	0.00E-01	0.00E-01	0.00E-01
FE 59	7.29E+05	6.34E+06	8.08E+05	1.90E+06	0.00E-01	0.00E-01	5.29E+05	0.00E-01
CO 58	2.79E+05	2.52E+06	0.00E-01	1.24E+05	0.00E-01	0.00E-01	0.00E-01	0.00E-01
CO 60	9.10E+05	7.73E+06	0.00E-01	4.12E+05	0.00E-01	0.00E-01	0.00E-01	0.00E-01
ZN 65	5.61E+07	7.83E+07	3.90E+07	1.25E+08	8.33E+07	0.00E-01	0.00E-01	0.00E-01
SR 89	1.21E+06	6.75E+06	4.21E+07	0.00E-01	0.00E-01	0.00E-01	0.00E-01	0.00E-01
SR 90	1.40E+08	1.76E+08	6.97E+09	0.00E-01	0.00E-01	0.00E-01	0.00E-01	0.00E-01
ZR 95	5.42E+00	2.54E+04	2.50E+01	8.02E+00	1.26E+01	0.00E-01	0.00E-01	0.00E-01
SB124	2.72E+05	1.95E+07	6.85E+05	1.30E+04	0.00E-01	1.66E+03	5.32E+05	0.00E-01
CS134	2.77E+08	5.93E+06	1.43E+08	3.39E+08	1.10E+08	0.00E-01	3.64E+07	0.00E-01
CS136	2.26E+07	3.55E+06	7.95E+06	3.14E+07	1.75E+07	0.00E-01	2.39E+06	0.00E-01
CS137	1.76E+08	5.20E+06	1.97E+08	2.69E+08	9.13E+07	0.00E-01	3.04E+07	0.00E-01
BA140	5.32E+04	1.68E+06	8.14E+05	1.02E+03	3.49E+02	0.00E-01	5.86E+02	0.00E-01
CE141	1.04E+01	3.49E+05	1.35E+02	9.16E+01	4.25E+01	0.00E-01	0.00E-01	0.00E-01
CE144	4.82E+02	3.03E+06	8.97E+03	3.74E+03	2.22E+03	0.00E-01	0.00E-01	0.00E-01
I 131	3.77E+06	1.74E+06	4.63E+06	6.59E+06	1.13E+07	2.16E+09	0.00E-01	0.00E-01
I 133	3.26E+04	9.60E+04	6.15E+04	1.07E+05	1.87E+05	1.57E+07	0.00E-01	0.00E-01

DOSE TRANSFER FACTORS FOR RADIONUCLIDES IN EFFLUENT AIR
Computed by GASPAR II

AGE = ADULT
PATHWAY = GOAT-MILK

	TOTAL BODY	GI-LLI	BONE	LIVER	KIDNEY	THYROID	LUNG	SKIN
				(mrem m^2)/Ci				
H 3	2.84E+01	2.84E+01	0.00E-01	2.84E+01	2.84E+01	2.84E+01	2.84E+01	2.84E+01
C 14	2.33E+03	2.33E+03	1.16E+04	2.33E+03	2.33E+03	2.33E+03	2.33E+03	2.33E+03
AR 41	0.00E-01	0.00E-01	0.00E-01	0.00E-01	0.00E-01	0.00E-01	0.00E-01	0.00E-01
KR 83m	0.00E-01	0.00E-01	0.00E-01	0.00E-01	0.00E-01	0.00E-01	0.00E-01	0.00E-01
KR 85m	0.00E-01	0.00E-01	0.00E-01	0.00E-01	0.00E-01	0.00E-01	0.00E-01	0.00E-01
KR 85	0.00E-01	0.00E-01	0.00E-01	0.00E-01	0.00E-01	0.00E-01	0.00E-01	0.00E-01
KR 87	0.00E-01	0.00E-01	0.00E-01	0.00E-01	0.00E-01	0.00E-01	0.00E-01	0.00E-01
KR 88	0.00E-01	0.00E-01	0.00E-01	0.00E-01	0.00E-01	0.00E-01	0.00E-01	0.00E-01
KR 89	0.00E-01	0.00E-01	0.00E-01	0.00E-01	0.00E-01	0.00E-01	0.00E-01	0.00E-01
KR 90	0.00E-01	0.00E-01	0.00E-01	0.00E-01	0.00E-01	0.00E-01	0.00E-01	0.00E-01
XE131m	0.00E-01	0.00E-01	0.00E-01	0.00E-01	0.00E-01	0.00E-01	0.00E-01	0.00E-01
XE133m	0.00E-01	0.00E-01	0.00E-01	0.00E-01	0.00E-01	0.00E-01	0.00E-01	0.00E-01
XE133	0.00E-01	0.00E-01	0.00E-01	0.00E-01	0.00E-01	0.00E-01	0.00E-01	0.00E-01
XE135m	0.00E-01	0.00E-01	0.00E-01	0.00E-01	0.00E-01	0.00E-01	0.00E-01	0.00E-01
XE135	0.00E-01	0.00E-01	0.00E-01	0.00E-01	0.00E-01	0.00E-01	0.00E-01	0.00E-01
XE137	0.00E-01	0.00E-01	0.00E-01	0.00E-01	0.00E-01	0.00E-01	0.00E-01	0.00E-01
XE138	0.00E-01	0.00E-01	0.00E-01	0.00E-01	0.00E-01	0.00E-01	0.00E-01	0.00E-01
CR 51	9.70E+01	2.44E+04	0.00E-01	0.00E-01	2.14E+01	5.80E+01	1.29E+02	0.00E-01
MN 54	4.88E+03	7.83E+04	0.00E-01	2.55E+04	7.61E+03	0.00E-01	0.00E-01	0.00E-01
FE 59	9.44E+04	8.21E+05	1.05E+05	2.47E+05	0.00E-01	0.00E-01	6.91E+04	0.00E-01
CO 58	3.36E+04	3.02E+05	0.00E-01	1.49E+04	0.00E-01	0.00E-01	0.00E-01	0.00E-01
CO 60	1.09E+05	9.29E+05	0.00E-01	4.94E+04	0.00E-01	0.00E-01	0.00E-01	0.00E-01
ZN 65	6.75E+06	9.41E+06	4.69E+06	1.49E+07	9.98E+06	0.00E-01	0.00E-01	0.00E-01
SR 89	2.54E+06	1.42E+07	8.84E+07	0.00E-01	0.00E-01	0.00E-01	0.00E-01	0.00E-01
SR 90	2.94E+08	3.68E+08	1.46E+10	0.00E-01	0.00E-01	0.00E-01	0.00E-01	0.00E-01
ZR 95	6.53E-01	3.05E+03	3.00E+00	9.63E-01	1.51E+00	0.00E-01	0.00E-01	0.00E-01
SB124	3.26E+04	2.34E+06	8.24E+04	1.56E+03	0.00E-01	2.00E+02	6.40E+04	0.00E-01
CS134	8.30E+08	1.78E+07	4.28E+08	1.02E+09	3.30E+08	0.00E-01	1.09E+08	0.00E-01
CS136	6.78E+07	1.07E+07	2.38E+07	9.41E+07	5.23E+07	0.00E-01	7.16E+06	0.00E-01
CS137	5.29E+08	1.56E+07	5.89E+08	8.08E+08	2.74E+08	0.00E-01	9.10E+07	0.00E-01
BA140	6.40E+03	2.01E+05	9.76E+04	1.23E+02	4.18E+01	0.00E-01	7.04E+01	0.00E-01
CE141	1.25E+00	4.18E+04	1.62E+01	1.10E+01	5.10E+00	0.00E-01	0.00E-01	0.00E-01
CE144	5.77E+01	3.64E+05	1.07E+03	4.50E+02	2.67E+02	0.00E-01	0.00E-01	0.00E-01
I 131	4.53E+06	2.09E+06	5.55E+06	7.92E+06	1.36E+07	2.60E+09	0.00E-01	0.00E-01
I 133	3.90E+04	1.15E+05	7.38E+04	1.28E+05	2.24E+05	1.89E+07	0.00E-01	0.00E-01

DOSE TRANSFER FACTORS FOR RADIONUCLIDES IN EFFLUENT AIR
Computed by GASPAR II

AGE = ADULT
PATHWAY = ANIMAL-MEAT

	TOTAL BODY	GI-LLI	BONE	LIVER	KIDNEY	THYROID	LUNG	SKIN
				(mrem m^2)/CI				
H 3	5.93E+00	5.93E+00	0.00E-01	5.93E+00	5.93E+00	5.93E+00	5.93E+00	5.93E+00
C 14	2.13E+03	2.13E+03	1.06E+04	2.13E+03	2.13E+03	2.13E+03	2.13E+03	2.13E+03
AR 41	0.00E-01	0.00E-01	0.00E-01	0.00E-01	0.00E-01	0.00E-01	0.00E-01	0.00E-01
KR 83m	0.00E-01	0.00E-01	0.00E-01	0.00E-01	0.00E-01	0.00E-01	0.00E-01	0.00E-01
KR 85m	0.00E-01	0.00E-01	0.00E-01	0.00E-01	0.00E-01	0.00E-01	0.00E-01	0.00E-01
KR 85	0.00E-01	0.00E-01	0.00E-01	0.00E-01	0.00E-01	0.00E-01	0.00E-01	0.00E-01
KR 87	0.00E-01	0.00E-01	0.00E-01	0.00E-01	0.00E-01	0.00E-01	0.00E-01	0.00E-01
KR 88	0.00E-01	0.00E-01	0.00E-01	0.00E-01	0.00E-01	0.00E-01	0.00E-01	0.00E-01
KR 89	0.00E-01	0.00E-01	0.00E-01	0.00E-01	0.00E-01	0.00E-01	0.00E-01	0.00E-01
KR 90	0.00E-01	0.00E-01	0.00E-01	0.00E-01	0.00E-01	0.00E-01	0.00E-01	0.00E-01
XE131m	0.00E-01	0.00E-01	0.00E-01	0.00E-01	0.00E-01	0.00E-01	0.00E-01	0.00E-01
XE133m	0.00E-01	0.00E-01	0.00E-01	0.00E-01	0.00E-01	0.00E-01	0.00E-01	0.00E-01
XE133	0.00E-01	0.00E-01	0.00E-01	0.00E-01	0.00E-01	0.00E-01	0.00E-01	0.00E-01
XE135m	0.00E-01	0.00E-01	0.00E-01	0.00E-01	0.00E-01	0.00E-01	0.00E-01	0.00E-01
XE135	0.00E-01	0.00E-01	0.00E-01	0.00E-01	0.00E-01	0.00E-01	0.00E-01	0.00E-01
XE137	0.00E-01	0.00E-01	0.00E-01	0.00E-01	0.00E-01	0.00E-01	0.00E-01	0.00E-01
XE138	0.00E-01	0.00E-01	0.00E-01	0.00E-01	0.00E-01	0.00E-01	0.00E-01	0.00E-01
CR 51	1.99E+02	5.01E+04	0.00E-01	0.00E-01	4.40E+01	1.19E+02	2.65E+02	0.00E-01
MN 54	4.44E+04	7.10E+05	0.00E-01	2.32E+05	6.91E+04	0.00E-01	0.00E-01	0.00E-01
FE 59	6.50E+06	5.64E+07	7.23E+06	1.70E+07	0.00E-01	0.00E-01	4.75E+06	0.00E-01
CO 58	1.08E+06	9.76E+06	0.00E-01	4.82E+05	0.00E-01	0.00E-01	0.00E-01	0.00E-01
CO 60	4.15E+06	3.55E+07	0.00E-01	1.89E+06	0.00E-01	0.00E-01	0.00E-01	0.00E-01
ZN 65	1.46E+07	2.03E+07	1.01E+07	3.23E+07	2.16E+07	0.00E-01	0.00E-01	0.00E-01
SR 89	2.51E+05	1.40E+06	8.75E+06	0.00E-01	0.00E-01	0.00E-01	0.00E-01	0.00E-01
SR 90	3.74E+07	4.66E+07	1.85E+09	0.00E-01	0.00E-01	0.00E-01	0.00E-01	0.00E-01
ZR 95	1.08E+04	5.04E+07	4.98E+04	1.59E+04	2.50E+04	0.00E-01	0.00E-01	0.00E-01
SB124	2.09E+05	1.50E+07	5.26E+05	9.98E+03	0.00E-01	1.28E+03	4.12E+05	0.00E-01
CS134	3.23E+07	6.91E+05	1.66E+07	3.93E+07	1.28E+07	0.00E-01	4.25E+06	0.00E-01
CS136	1.03E+06	1.63E+05	3.61E+05	1.43E+06	7.95E+05	0.00E-01	1.09E+05	0.00E-01
CS137	2.08E+07	6.15E+05	2.33E+07	3.17E+07	1.08E+07	0.00E-01	3.58E+06	0.00E-01
BA140	5.70E+04	1.79E+06	8.71E+05	1.09E+03	3.71E+02	0.00E-01	6.27E+02	0.00E-01
CE141	3.01E+01	1.01E+06	3.93E+02	2.65E+02	1.23E+02	0.00E-01	0.00E-01	0.00E-01
CE144	1.96E+03	1.24E+07	3.64E+04	1.53E+04	9.06E+03	0.00E-01	0.00E-01	0.00E-01
I 131	1.37E+05	6.31E+04	1.67E+05	2.39E+05	4.09E+05	7.83E+07	0.00E-01	0.00E-01
I 133	3.11E-03	9.16E-03	5.86E-03	1.02E-02	1.78E-02	1.50E+00	0.00E-01	0.00E-01

DOSE TRANSFER FACTORS FOR RADIONUCLIDES IN EFFLUENT AIR
Computed by GASPAR II

AGE = ADULT
PATHWAY = VEGETABLES

	TOTAL BODY	GI-LLI	BONE	LIVER	KIDNEY	THYROID	LUNG	SKIN
				(mrem m^2)/Ci				
H 3	4.12E+01	4.12E+01	0.00E-01	4.12E+01	4.12E+01	4.12E+01	4.12E+01	4.12E+01
C 14	5.74E+03	5.74E+03	2.87E+04	5.74E+03	5.74E+03	5.74E+03	5.74E+03	5.74E+03
AR 41	0.00E-01	0.00E-01	0.00E-01	0.00E-01	0.00E-01	0.00E-01	0.00E-01	0.00E-01
KR 83m	0.00E-01	0.00E-01	0.00E-01	0.00E-01	0.00E-01	0.00E-01	0.00E-01	0.00E-01
KR 85m	0.00E-01	0.00E-01	0.00E-01	0.00E-01	0.00E-01	0.00E-01	0.00E-01	0.00E-01
KR 85	0.00E-01	0.00E-01	0.00E-01	0.00E-01	0.00E-01	0.00E-01	0.00E-01	0.00E-01
KR 87	0.00E-01	0.00E-01	0.00E-01	0.00E-01	0.00E-01	0.00E-01	0.00E-01	0.00E-01
KR 88	0.00E-01	0.00E-01	0.00E-01	0.00E-01	0.00E-01	0.00E-01	0.00E-01	0.00E-01
KR 89	0.00E-01	0.00E-01	0.00E-01	0.00E-01	0.00E-01	0.00E-01	0.00E-01	0.00E-01
KR 90	0.00E-01	0.00E-01	0.00E-01	0.00E-01	0.00E-01	0.00E-01	0.00E-01	0.00E-01
XE131m	0.00E-01	0.00E-01	0.00E-01	0.00E-01	0.00E-01	0.00E-01	0.00E-01	0.00E-01
XE133m	0.00E-01	0.00E-01	0.00E-01	0.00E-01	0.00E-01	0.00E-01	0.00E-01	0.00E-01
XE133	0.00E-01	0.00E-01	0.00E-01	0.00E-01	0.00E-01	0.00E-01	0.00E-01	0.00E-01
XE135m	0.00E-01	0.00E-01	0.00E-01	0.00E-01	0.00E-01	0.00E-01	0.00E-01	0.00E-01
XE135	0.00E-01	0.00E-01	0.00E-01	0.00E-01	0.00E-01	0.00E-01	0.00E-01	0.00E-01
XE137	0.00E-01	0.00E-01	0.00E-01	0.00E-01	0.00E-01	0.00E-01	0.00E-01	0.00E-01
XE138	0.00E-01	0.00E-01	0.00E-01	0.00E-01	0.00E-01	0.00E-01	0.00E-01	0.00E-01
CR 51	1.45E+03	3.64E+05	0.00E-01	0.00E-01	3.20E+02	8.68E+02	1.93E+03	0.00E-01
MN 54	1.86E+06	2.99E+07	0.00E-01	9.76E+06	2.90E+06	0.00E-01	0.00E-01	0.00E-01
FE 59	3.52E+06	3.07E+07	3.93E+06	9.19E+06	0.00E-01	0.00E-01	2.57E+06	0.00E-01
CO 58	2.13E+06	1.93E+07	0.00E-01	9.51E+05	0.00E-01	0.00E-01	0.00E-01	0.00E-01
CO 60	1.16E+07	9.92E+07	0.00E-01	5.29E+06	0.00E-01	0.00E-01	0.00E-01	0.00E-01
ZN 65	1.83E+07	2.55E+07	1.27E+07	4.06E+07	2.70E+07	0.00E-01	0.00E-01	0.00E-01
SR 89	9.19E+06	5.13E+07	3.20E+08	0.00E-01	0.00E-01	0.00E-01	0.00E-01	0.00E-01
SR 90	1.26E+09	1.57E+09	6.27E+10	0.00E-01	0.00E-01	0.00E-01	0.00E-01	0.00E-01
ZR 95	7.89E+03	3.68E+07	3.64E+04	1.16E+04	1.83E+04	0.00E-01	0.00E-01	0.00E-01
SB124	1.27E+06	9.13E+07	3.20E+06	6.08E+04	0.00E-01	7.80E+03	2.50E+06	0.00E-01
CS134	2.87E+08	6.15E+06	1.47E+08	3.52E+08	1.13E+08	0.00E-01	3.77E+07	0.00E-01
CS136	3.83E+06	6.02E+05	1.35E+06	5.32E+06	2.96E+06	0.00E-01	4.06E+05	0.00E-01
CS137	2.06E+08	6.08E+06	2.30E+08	3.14E+08	1.07E+08	0.00E-01	3.55E+07	0.00E-01
BA140	2.67E+05	8.37E+06	4.06E+06	5.10E+03	1.74E+03	0.00E-01	2.92E+03	0.00E-01
CE141	4.72E+02	1.59E+07	6.15E+03	4.15E+03	1.93E+03	0.00E-01	0.00E-01	0.00E-01
CE144	5.36E+04	3.39E+08	9.98E+05	4.18E+05	2.48E+05	0.00E-01	0.00E-01	0.00E-01
I 131	1.05E+06	4.82E+05	1.28E+06	1.83E+06	3.14E+06	5.99E+08	0.00E-01	0.00E-01
I 133	1.75E+04	5.17E+04	3.30E+04	5.74E+04	1.00E+05	8.43E+06	0.00E-01	0.00E-01

DOSE TRANSFER FACTORS FOR RADIONUCLIDES IN EFFLUENT AIR
Computed by GASPAR II

AGE = ADULT
PATHWAY = PLUME

	TOTAL BODY	GI-LLI	BONE	LIVER	KIDNEY	THYROID	LUNG	SKIN
				(mrem m^3)/(Ci sec)				
H 3	0.00E-01	0.00E-01	0.00E-01	0.00E-01	0.00E-01	0.00E-01	0.00E-01	0.00E-01
C 14	0.00E-01	0.00E-01	0.00E-01	0.00E-01	0.00E-01	0.00E-01	0.00E-01	0.00E-01
AR 41	1.96E+02	1.96E+02	1.96E+02	1.96E+02	1.96E+02	1.96E+02	1.96E+02	3.14E+02
KR 83m	1.68E-03	1.68E-03	1.68E-03	1.68E-03	1.68E-03	1.68E-03	9.38E-02	4.75E-01
KR 85m	2.60E+01	2.60E+01	2.60E+01	2.60E+01	2.60E+01	2.60E+01	2.66E+01	7.67E+01
KR 85	3.58E-01	3.58E-01	3.58E-01	3.58E-01	3.58E-01	3.58E-01	9.51E-01	4.28E+01
KR 87	1.32E+02	1.32E+02	1.32E+02	1.32E+02	1.32E+02	1.32E+02	1.35E+02	4.60E+02
KR 88	3.26E+02	3.26E+02	3.26E+02	3.26E+02	3.26E+02	3.26E+02	3.26E+02	4.50E+02
KR 89	3.68E+02	3.68E+02	3.68E+02	3.68E+02	3.68E+02	3.68E+02	3.71E+02	7.48E+02
KR 90	3.46E+02	3.46E+02	3.46E+02	3.46E+02	3.46E+02	3.46E+02	3.49E+02	6.33E+02
XE131m	2.03E+00	2.03E+00	2.03E+00	2.03E+00	2.03E+00	2.03E+00	2.38E+00	1.89E+01
XE133m	5.58E+00	5.58E+00	5.58E+00	5.58E+00	5.58E+00	5.58E+00	6.02E+00	3.96E+01
XE133	6.53E+00	6.53E+00	6.53E+00	6.53E+00	6.53E+00	6.53E+00	6.85E+00	1.84E+01
XE135m	6.91E+01	6.91E+01	6.91E+01	6.91E+01	6.91E+01	6.91E+01	6.94E+01	1.05E+02
XE135	4.02E+01	4.02E+01	4.02E+01	4.02E+01	4.02E+01	4.02E+01	4.09E+01	1.06E+02
XE137	3.15E+01	3.15E+01	3.15E+01	3.15E+01	3.15E+01	3.15E+01	3.55E+01	4.25E+02
XE138	1.96E+02	1.96E+02	1.96E+02	1.96E+02	1.96E+02	1.96E+02	1.97E+02	3.58E+02
CR 51	0.00E-01	0.00E-01	0.00E-01	0.00E-01	0.00E-01	0.00E-01	0.00E-01	0.00E-01
MN 54	0.00E-01	0.00E-01	0.00E-01	0.00E-01	0.00E-01	0.00E-01	0.00E-01	0.00E-01
FE 59	0.00E-01	0.00E-01	0.00E-01	0.00E-01	0.00E-01	0.00E-01	0.00E-01	0.00E-01
CO 58	0.00E-01	0.00E-01	0.00E-01	0.00E-01	0.00E-01	0.00E-01	0.00E-01	0.00E-01
CO 60	0.00E-01	0.00E-01	0.00E-01	0.00E-01	0.00E-01	0.00E-01	0.00E-01	0.00E-01
ZN 65	0.00E-01	0.00E-01	0.00E-01	0.00E-01	0.00E-01	0.00E-01	0.00E-01	0.00E-01
SR 89	0.00E-01	0.00E-01	0.00E-01	0.00E-01	0.00E-01	0.00E-01	0.00E-01	0.00E-01
SR 90	0.00E-01	0.00E-01	0.00E-01	0.00E-01	0.00E-01	0.00E-01	0.00E-01	0.00E-01
ZR 95	0.00E-01	0.00E-01	0.00E-01	0.00E-01	0.00E-01	0.00E-01	0.00E-01	0.00E-01
SB124	0.00E-01	0.00E-01	0.00E-01	0.00E-01	0.00E-01	0.00E-01	0.00E-01	0.00E-01
CS134	0.00E-01	0.00E-01	0.00E-01	0.00E-01	0.00E-01	0.00E-01	0.00E-01	0.00E-01
CS136	0.00E-01	0.00E-01	0.00E-01	0.00E-01	0.00E-01	0.00E-01	0.00E-01	0.00E-01
CS137	0.00E-01	0.00E-01	0.00E-01	0.00E-01	0.00E-01	0.00E-01	0.00E-01	0.00E-01
BA140	0.00E-01	0.00E-01	0.00E-01	0.00E-01	0.00E-01	0.00E-01	0.00E-01	0.00E-01
CE141	0.00E-01	0.00E-01	0.00E-01	0.00E-01	0.00E-01	0.00E-01	0.00E-01	0.00E-01
CE144	0.00E-01	0.00E-01	0.00E-01	0.00E-01	0.00E-01	0.00E-01	0.00E-01	0.00E-01
I 131	0.00E-01	0.00E-01	0.00E-01	0.00E-01	0.00E-01	0.00E-01	0.00E-01	0.00E-01
I 133	0.00E-01	0.00E-01	0.00E-01	0.00E-01	0.00E-01	0.00E-01	0.00E-01	0.00E-01

DOSE TRANSFER FACTORS FOR RADIONUCLIDES IN EFFLUENT AIR
Computed by GASPAR II

AGE = TEENAGER
PATHWAY = INHALATION

	TOTAL BODY	GI-LLI	BONE	LIVER	KIDNEY	THYROID	LUNG	SKIN
				(mrem m^3)/(Ci sec)				
H 3	2.30E+01	2.30E+01	0.00E-01	2.30E+01	2.30E+01	2.30E+01	2.30E+01	2.30E+01
C 14	1.54E+02	1.54E+02	8.24E+02	1.54E+02	1.54E+02	1.54E+02	1.54E+02	0.00E-01
AR 41	0.00E-01	0.00E-01	0.00E-01	0.00E-01	0.00E-01	0.00E-01	0.00E-01	0.00E-01
KR 83m	0.00E-01	0.00E-01	0.00E-01	0.00E-01	0.00E-01	0.00E-01	0.00E-01	0.00E-01
KR 85m	0.00E-01	0.00E-01	0.00E-01	0.00E-01	0.00E-01	0.00E-01	0.00E-01	0.00E-01
KR 85	0.00E-01	0.00E-01	0.00E-01	0.00E-01	0.00E-01	0.00E-01	0.00E-01	0.00E-01
KR 87	0.00E-01	0.00E-01	0.00E-01	0.00E-01	0.00E-01	0.00E-01	0.00E-01	0.00E-01
KR 88	0.00E-01	0.00E-01	0.00E-01	0.00E-01	0.00E-01	0.00E-01	0.00E-01	0.00E-01
KR 89	0.00E-01	0.00E-01	0.00E-01	0.00E-01	0.00E-01	0.00E-01	0.00E-01	0.00E-01
KR 90	0.00E-01	0.00E-01	0.00E-01	0.00E-01	0.00E-01	0.00E-01	0.00E-01	0.00E-01
XE131m	0.00E-01	0.00E-01	0.00E-01	0.00E-01	0.00E-01	0.00E-01	0.00E-01	0.00E-01
XE133m	0.00E-01	0.00E-01	0.00E-01	0.00E-01	0.00E-01	0.00E-01	0.00E-01	0.00E-01
XE133	0.00E-01	0.00E-01	0.00E-01	0.00E-01	0.00E-01	0.00E-01	0.00E-01	0.00E-01
XE135m	0.00E-01	0.00E-01	0.00E-01	0.00E-01	0.00E-01	0.00E-01	0.00E-01	0.00E-01
XE135	0.00E-01	0.00E-01	0.00E-01	0.00E-01	0.00E-01	0.00E-01	0.00E-01	0.00E-01
XE137	0.00E-01	0.00E-01	0.00E-01	0.00E-01	0.00E-01	0.00E-01	0.00E-01	0.00E-01
XE138	0.00E-01	0.00E-01	0.00E-01	0.00E-01	0.00E-01	0.00E-01	0.00E-01	0.00E-01
CR 51	4.28E+00	9.51E+01	0.00E-01	0.00E-01	9.73E-01	2.38E+00	6.65E+02	0.00E-01
MN 54	2.66E+02	2.12E+03	0.00E-01	1.62E+03	4.02E+02	0.00E-01	6.27E+04	0.00E-01
FE 59	4.53E+02	5.64E+03	5.04E+02	1.17E+03	0.00E-01	0.00E-01	4.85E+04	0.00E-01
CO 58	8.81E+01	3.02E+03	0.00E-01	6.56E+01	0.00E-01	0.00E-01	4.25E+04	0.00E-01
CO 60	6.27E+02	8.21E+03	0.00E-01	4.79E+02	0.00E-01	0.00E-01	2.76E+05	0.00E-01
ZN 65	1.98E+03	1.48E+03	1.22E+03	4.25E+03	2.74E+03	0.00E-01	3.93E+04	0.00E-01
SR 89	3.96E+02	1.18E+04	1.38E+04	0.00E-01	0.00E-01	0.00E-01	7.67E+04	0.00E-01
SR 90	2.11E+04	2.42E+04	1.05E+06	0.00E-01	0.00E-01	0.00E-01	5.23E+05	0.00E-01
ZR 95	9.98E+02	4.72E+03	4.63E+03	1.45E+03	2.14E+03	0.00E-01	8.52E+04	0.00E-01
SB124	5.32E+02	1.26E+04	1.37E+03	2.52E+01	0.00E-01	3.09E+00	1.22E+05	0.00E-01
CS134	1.74E+04	3.09E+02	1.59E+04	3.58E+04	1.19E+04	0.00E-01	4.63E+03	0.00E-01
CS136	4.34E+03	3.45E+02	1.63E+03	6.15E+03	3.49E+03	0.00E-01	5.64E+02	0.00E-01
CS137	9.86E+03	2.69E+02	2.13E+04	2.69E+04	9.63E+03	0.00E-01	3.83E+03	0.00E-01
BA140	1.12E+02	7.26E+03	1.73E+03	2.13E+00	7.23E-01	0.00E-01	6.43E+04	0.00E-01
CE141	6.88E+01	3.99E+03	9.00E+02	6.02E+02	2.81E+02	0.00E-01	1.95E+04	0.00E-01
CE144	8.33E+03	2.74E+04	1.55E+05	6.40E+04	3.83E+04	0.00E-01	4.25E+05	0.00E-01
I 131	8.37E+02	2.06E+02	1.12E+03	1.56E+03	2.66E+03	4.63E+05	0.00E-01	0.00E-01
I 133	1.97E+02	3.26E+02	3.87E+02	6.50E+02	1.14E+03	9.25E+04	0.00E-01	0.00E-01

DOSE TRANSFER FACTORS FOR RADIONUCLIDES IN EFFLUENT AIR
Computed by GASPAR II

AGE = TEENAGER
PATHWAY = GROUND PLANE

	TOTAL BODY	GI-LLI	BONE	LIVER	KIDNEY	THYROID	LUNG	SKIN
				(mrem m^2)/Ci				
H 3	0.00E-01	0.00E-01	0.00E-01	0.00E-01	0.00E-01	0.00E-01	0.00E-01	0.00E-01
C 14	0.00E-01	0.00E-01	0.00E-01	0.00E-01	0.00E-01	0.00E-01	0.00E-01	0.00E-01
AR 41	0.00E-01	0.00E-01	0.00E-01	0.00E-01	0.00E-01	0.00E-01	0.00E-01	0.00E-01
KR 83m	0.00E-01	0.00E-01	0.00E-01	0.00E-01	0.00E-01	0.00E-01	0.00E-01	0.00E-01
KR 85m	0.00E-01	0.00E-01	0.00E-01	0.00E-01	0.00E-01	0.00E-01	0.00E-01	0.00E-01
KR 85	0.00E-01	0.00E-01	0.00E-01	0.00E-01	0.00E-01	0.00E-01	0.00E-01	0.00E-01
KR 87	0.00E-01	0.00E-01	0.00E-01	0.00E-01	0.00E-01	0.00E-01	0.00E-01	0.00E-01
KR 88	0.00E-01	0.00E-01	0.00E-01	0.00E-01	0.00E-01	0.00E-01	0.00E-01	0.00E-01
KR 89	0.00E-01	0.00E-01	0.00E-01	0.00E-01	0.00E-01	0.00E-01	0.00E-01	0.00E-01
KR 90	0.00E-01	0.00E-01	0.00E-01	0.00E-01	0.00E-01	0.00E-01	0.00E-01	0.00E-01
XE131m	0.00E-01	0.00E-01	0.00E-01	0.00E-01	0.00E-01	0.00E-01	0.00E-01	0.00E-01
XE133m	0.00E-01	0.00E-01	0.00E-01	0.00E-01	0.00E-01	0.00E-01	0.00E-01	0.00E-01
XE133	0.00E-01	0.00E-01	0.00E-01	0.00E-01	0.00E-01	0.00E-01	0.00E-01	0.00E-01
XE135m	0.00E-01	0.00E-01	0.00E-01	0.00E-01	0.00E-01	0.00E-01	0.00E-01	0.00E-01
XE135	0.00E-01	0.00E-01	0.00E-01	0.00E-01	0.00E-01	0.00E-01	0.00E-01	0.00E-01
XE137	0.00E-01	0.00E-01	0.00E-01	0.00E-01	0.00E-01	0.00E-01	0.00E-01	0.00E-01
XE138	0.00E-01	0.00E-01	0.00E-01	0.00E-01	0.00E-01	0.00E-01	0.00E-01	0.00E-01
CR 51	1.47E+05	1.47E+05	1.47E+05	1.47E+05	1.47E+05	1.47E+05	1.47E+05	1.74E+05
MN 54	4.37E+07	4.37E+07	4.37E+07	4.37E+07	4.37E+07	4.37E+07	4.37E+07	5.13E+07
FE 59	8.65E+06	8.65E+06	8.65E+06	8.65E+06	8.65E+06	8.65E+06	8.65E+06	1.01E+07
CO 58	1.20E+07	1.20E+07	1.20E+07	1.20E+07	1.20E+07	1.20E+07	1.20E+07	1.41E+07
CO 60	6.81E+08	6.81E+08	6.81E+08	6.81E+08	6.81E+08	6.81E+08	6.81E+08	8.02E+08
ZN 65	2.36E+07	2.36E+07	2.36E+07	2.36E+07	2.36E+07	2.36E+07	2.36E+07	2.72E+07
SR 89	6.85E+02	6.85E+02	6.85E+02	6.85E+02	6.85E+02	6.85E+02	6.85E+02	7.95E+02
SR 90	0.00E-01	0.00E-01	0.00E-01	0.00E-01	0.00E-01	0.00E-01	0.00E-01	0.00E-01
ZR 95	7.76E+06	7.76E+06	7.76E+06	7.76E+06	7.76E+06	7.76E+06	7.76E+06	9.03E+06
SB124	1.90E+07	1.90E+07	1.90E+07	1.90E+07	1.90E+07	1.90E+07	1.90E+07	2.19E+07
CS134	2.17E+08	2.17E+08	2.17E+08	2.17E+08	2.17E+08	2.17E+08	2.17E+08	2.53E+08
CS136	4.75E+06	4.75E+06	4.75E+06	4.75E+06	4.75E+06	4.75E+06	4.75E+06	5.39E+06
CS137	3.26E+08	3.26E+08	3.26E+08	3.26E+08	3.26E+08	3.26E+08	3.26E+08	3.80E+08
BA140	6.50E+05	6.50E+05	6.50E+05	6.50E+05	6.50E+05	6.50E+05	6.50E+05	7.45E+05
CE141	4.34E+05	4.34E+05	4.34E+05	4.34E+05	4.34E+05	4.34E+05	4.34E+05	4.88E+05
CE144	2.21E+06	2.21E+06	2.21E+06	2.21E+06	2.21E+06	2.21E+06	2.21E+06	2.55E+06
I 131	2.73E+05	2.73E+05	2.73E+05	2.73E+05	2.73E+05	2.73E+05	2.73E+05	3.33E+05
I 133	3.90E+04	3.90E+04	3.90E+04	3.90E+04	3.90E+04	3.90E+04	3.90E+04	4.72E+04

DOSE TRANSFER FACTORS FOR RADIONUCLIDES IN EFFLUENT AIR
Computed by GASPAR II

AGE = TEENAGER
PATHWAY = COW-MILK

	TOTAL BODY	GI-LLI	BONE	LIVER	KIDNEY	THYROID	LUNG	SKIN
				(mrem m^2)/Ci				
H 3	1.81E+01	1.81E+01	0.00E-01	1.81E+01	1.81E+01	1.81E+01	1.81E+01	1.81E+01
C 14	4.28E+03	4.28E+03	2.15E+04	4.28E+03	4.28E+03	4.28E+03	4.28E+03	4.28E+03
AR 41	0.00E-01	0.00E-01	0.00E-01	0.00E-01	0.00E-01	0.00E-01	0.00E-01	0.00E-01
KR 83m	0.00E-01	0.00E-01	0.00E-01	0.00E-01	0.00E-01	0.00E-01	0.00E-01	0.00E-01
KR 85m	0.00E-01	0.00E-01	0.00E-01	0.00E-01	0.00E-01	0.00E-01	0.00E-01	0.00E-01
KR 85	0.00E-01	0.00E-01	0.00E-01	0.00E-01	0.00E-01	0.00E-01	0.00E-01	0.00E-01
KR 87	0.00E-01	0.00E-01	0.00E-01	0.00E-01	0.00E-01	0.00E-01	0.00E-01	0.00E-01
KR 88	0.00E-01	0.00E-01	0.00E-01	0.00E-01	0.00E-01	0.00E-01	0.00E-01	0.00E-01
KR 89	0.00E-01	0.00E-01	0.00E-01	0.00E-01	0.00E-01	0.00E-01	0.00E-01	0.00E-01
KR 90	0.00E-01	0.00E-01	0.00E-01	0.00E-01	0.00E-01	0.00E-01	0.00E-01	0.00E-01
XE131m	0.00E-01	0.00E-01	0.00E-01	0.00E-01	0.00E-01	0.00E-01	0.00E-01	0.00E-01
XE133m	0.00E-01	0.00E-01	0.00E-01	0.00E-01	0.00E-01	0.00E-01	0.00E-01	0.00E-01
XE133	0.00E-01	0.00E-01	0.00E-01	0.00E-01	0.00E-01	0.00E-01	0.00E-01	0.00E-01
XE135m	0.00E-01	0.00E-01	0.00E-01	0.00E-01	0.00E-01	0.00E-01	0.00E-01	0.00E-01
XE135	0.00E-01	0.00E-01	0.00E-01	0.00E-01	0.00E-01	0.00E-01	0.00E-01	0.00E-01
XE137	0.00E-01	0.00E-01	0.00E-01	0.00E-01	0.00E-01	0.00E-01	0.00E-01	0.00E-01
XE138	0.00E-01	0.00E-01	0.00E-01	0.00E-01	0.00E-01	0.00E-01	0.00E-01	0.00E-01
CR 51	1.41E+03	2.37E+05	0.00E-01	0.00E-01	3.10E+02	7.86E+02	2.02E+03	0.00E-01
MN 54	7.04E+04	7.26E+05	0.00E-01	3.55E+05	1.06E+05	0.00E-01	0.00E-01	0.00E-01
FE 59	1.27E+06	7.76E+06	1.41E+06	3.30E+06	0.00E-01	0.00E-01	1.04E+06	0.00E-01
CO 58	4.82E+05	2.89E+06	0.00E-01	2.09E+05	0.00E-01	0.00E-01	0.00E-01	0.00E-01
CO 60	1.57E+06	9.10E+06	0.00E-01	6.97E+05	0.00E-01	0.00E-01	0.00E-01	0.00E-01
ZN 65	9.73E+07	8.84E+07	6.02E+07	2.09E+08	1.33E+08	0.00E-01	0.00E-01	0.00E-01
SR 89	2.22E+06	9.25E+06	7.76E+07	0.00E-01	0.00E-01	0.00E-01	0.00E-01	0.00E-01
SR 90	2.11E+08	2.41E+08	1.06E+10	0.00E-01	0.00E-01	0.00E-01	0.00E-01	0.00E-01
ZR 95	9.51E+00	3.20E+04	4.37E+01	1.38E+01	2.03E+01	0.00E-01	0.00E-01	0.00E-01
SB124	4.79E+05	2.47E+07	1.22E+06	2.25E+04	0.00E-01	2.78E+03	1.07E+06	0.00E-01
CS134	2.70E+08	7.26E+06	2.47E+08	5.83E+08	1.85E+08	0.00E-01	7.07E+07	0.00E-01
CS136	3.58E+07	4.28E+06	1.35E+07	5.32E+07	2.90E+07	0.00E-01	4.56E+06	0.00E-01
CS137	1.65E+08	6.75E+06	3.58E+08	4.75E+08	1.62E+08	0.00E-01	6.27E+07	0.00E-01
BA140	9.48E+04	2.27E+06	1.47E+06	1.80E+03	6.12E+02	0.00E-01	1.21E+03	0.00E-01
CE141	1.90E+01	4.72E+05	2.48E+02	1.65E+02	7.80E+01	0.00E-01	0.00E-01	0.00E-01
CE144	8.87E+02	4.15E+06	1.65E+04	6.81E+03	4.09E+03	0.00E-01	0.00E-01	0.00E-01
I 131	6.31E+06	2.32E+06	8.37E+06	1.17E+07	2.02E+07	3.42E+09	0.00E-01	0.00E-01
I 133	5.80E+04	1.44E+05	1.12E+05	1.90E+05	3.33E+05	2.66E+07	0.00E-01	0.00E-01

DOSE TRANSFER FACTORS FOR RADIONUCLIDES IN EFFLUENT AIR
Computed by GASPAR II

AGE = TEENAGER
PATHWAY = GOAT-MILK

	TOTAL BODY	GI-LLI	BONE	LIVER	KIDNEY	THYROID	LUNG	SKIN
				(mrem m^2)/Ci				
H 3	3.71E+01	3.71E+01	0.00E-01	3.71E+01	3.71E+01	3.71E+01	3.71E+01	3.71E+01
C 14	4.28E+03	4.28E+03	2.15E+04	4.28E+03	4.28E+03	4.28E+03	4.28E+03	4.28E+03
AR 41	0.00E-01	0.00E-01	0.00E-01	0.00E-01	0.00E-01	0.00E-01	0.00E-01	0.00E-01
KR 83m	0.00E-01	0.00E-01	0.00E-01	0.00E-01	0.00E-01	0.00E-01	0.00E-01	0.00E-01
KR 85m	0.00E-01	0.00E-01	0.00E-01	0.00E-01	0.00E-01	0.00E-01	0.00E-01	0.00E-01
KR 85	0.00E-01	0.00E-01	0.00E-01	0.00E-01	0.00E-01	0.00E-01	0.00E-01	0.00E-01
KR 87	0.00E-01	0.00E-01	0.00E-01	0.00E-01	0.00E-01	0.00E-01	0.00E-01	0.00E-01
KR 88	0.00E-01	0.00E-01	0.00E-01	0.00E-01	0.00E-01	0.00E-01	0.00E-01	0.00E-01
KR 89	0.00E-01	0.00E-01	0.00E-01	0.00E-01	0.00E-01	0.00E-01	0.00E-01	0.00E-01
KR 90	0.00E-01	0.00E-01	0.00E-01	0.00E-01	0.00E-01	0.00E-01	0.00E-01	0.00E-01
XE131m	0.00E-01	0.00E-01	0.00E-01	0.00E-01	0.00E-01	0.00E-01	0.00E-01	0.00E-01
XE133m	0.00E-01	0.00E-01	0.00E-01	0.00E-01	0.00E-01	0.00E-01	0.00E-01	0.00E-01
XE133	0.00E-01	0.00E-01	0.00E-01	0.00E-01	0.00E-01	0.00E-01	0.00E-01	0.00E-01
XE135m	0.00E-01	0.00E-01	0.00E-01	0.00E-01	0.00E-01	0.00E-01	0.00E-01	0.00E-01
XE135	0.00E-01	0.00E-01	0.00E-01	0.00E-01	0.00E-01	0.00E-01	0.00E-01	0.00E-01
XE137	0.00E-01	0.00E-01	0.00E-01	0.00E-01	0.00E-01	0.00E-01	0.00E-01	0.00E-01
XE138	0.00E-01	0.00E-01	0.00E-01	0.00E-01	0.00E-01	0.00E-01	0.00E-01	0.00E-01
CR 51	1.70E+02	2.85E+04	0.00E-01	0.00E-01	3.71E+01	9.41E+01	2.42E+02	0.00E-01
MN 54	8.43E+03	8.71E+04	0.00E-01	4.25E+04	1.27E+04	0.00E-01	0.00E-01	0.00E-01
FE 59	1.65E+05	1.01E+06	1.83E+05	4.28E+05	0.00E-01	0.00E-01	1.35E+05	0.00E-01
CO 58	5.80E+04	3.45E+05	0.00E-01	2.51E+04	0.00E-01	0.00E-01	0.00E-01	0.00E-01
CO 60	1.89E+05	1.09E+06	0.00E-01	8.37E+04	0.00E-01	0.00E-01	0.00E-01	0.00E-01
ZN 65	1.17E+07	1.06E+07	7.19E+06	2.50E+07	1.60E+07	0.00E-01	0.00E-01	0.00E-01
SR 89	4.66E+06	1.94E+07	1.63E+08	0.00E-01	0.00E-01	0.00E-01	0.00E-01	0.00E-01
SR 90	4.44E+08	5.07E+08	2.22E+10	0.00E-01	0.00E-01	0.00E-01	0.00E-01	0.00E-01
ZR 95	1.14E+00	3.83E+03	5.26E+00	1.66E+00	2.43E+00	0.00E-01	0.00E-01	0.00E-01
SB124	5.74E+04	2.96E+06	1.47E+05	2.70E+03	0.00E-01	3.33E+02	1.28E+05	0.00E-01
CS134	8.11E+08	2.17E+07	7.42E+08	1.75E+09	5.55E+08	0.00E-01	2.12E+08	0.00E-01
CS136	1.07E+08	1.28E+07	4.06E+07	1.60E+08	8.68E+07	0.00E-01	1.37E+07	0.00E-01
CS137	4.94E+08	2.02E+07	1.07E+09	1.42E+09	4.85E+08	0.00E-01	1.88E+08	0.00E-01
BA140	1.14E+04	2.72E+05	1.77E+05	2.16E+02	7.32E+01	0.00E-01	1.45E+02	0.00E-01
CE141	2.28E+00	5.67E+04	2.98E+01	1.99E+01	9.35E+00	0.00E-01	0.00E-01	0.00E-01
CE144	1.06E+02	4.98E+05	1.98E+03	8.18E+02	4.88E+02	0.00E-01	0.00E-01	0.00E-01
I 131	7.54E+06	2.78E+06	1.00E+07	1.41E+07	2.42E+07	4.09E+09	0.00E-01	0.00E-01
I 133	6.97E+04	1.73E+05	1.35E+05	2.28E+05	3.99E+05	3.20E+07	0.00E-01	0.00E-01

DOSE TRANSFER FACTORS FOR RADIONUCLIDES IN EFFLUENT AIR
Computed by GASPAR II

AGE = TEENAGER
PATHWAY = ANIMAL-MEAT

	TOTAL BODY	GI-LLI	BONE	LIVER	KIDNEY	THYROID	LUNG	SKIN
				(mrem m^2)/Ci				
H 3	3.55E+00	3.55E+00	0.00E-01	3.55E+00	3.55E+00	3.55E+00	3.55E+00	3.55E+00
C 14	1.80E+03	1.80E+03	9.00E+03	1.80E+03	1.80E+03	1.80E+03	1.80E+03	1.80E+03
AR 41	0.00E-01	0.00E-01	0.00E-01	0.00E-01	0.00E-01	0.00E-01	0.00E-01	0.00E-01
KR 83m	0.00E-01	0.00E-01	0.00E-01	0.00E-01	0.00E-01	0.00E-01	0.00E-01	0.00E-01
KR 85m	0.00E-01	0.00E-01	0.00E-01	0.00E-01	0.00E-01	0.00E-01	0.00E-01	0.00E-01
KR 85	0.00E-01	0.00E-01	0.00E-01	0.00E-01	0.00E-01	0.00E-01	0.00E-01	0.00E-01
KR 87	0.00E-01	0.00E-01	0.00E-01	0.00E-01	0.00E-01	0.00E-01	0.00E-01	0.00E-01
KR 88	0.00E-01	0.00E-01	0.00E-01	0.00E-01	0.00E-01	0.00E-01	0.00E-01	0.00E-01
KR 89	0.00E-01	0.00E-01	0.00E-01	0.00E-01	0.00E-01	0.00E-01	0.00E-01	0.00E-01
KR 90	0.00E-01	0.00E-01	0.00E-01	0.00E-01	0.00E-01	0.00E-01	0.00E-01	0.00E-01
XE131m	0.00E-01	0.00E-01	0.00E-01	0.00E-01	0.00E-01	0.00E-01	0.00E-01	0.00E-01
XE133m	0.00E-01	0.00E-01	0.00E-01	0.00E-01	0.00E-01	0.00E-01	0.00E-01	0.00E-01
XE133	0.00E-01	0.00E-01	0.00E-01	0.00E-01	0.00E-01	0.00E-01	0.00E-01	0.00E-01
XE135m	0.00E-01	0.00E-01	0.00E-01	0.00E-01	0.00E-01	0.00E-01	0.00E-01	0.00E-01
XE135	0.00E-01	0.00E-01	0.00E-01	0.00E-01	0.00E-01	0.00E-01	0.00E-01	0.00E-01
XE137	0.00E-01	0.00E-01	0.00E-01	0.00E-01	0.00E-01	0.00E-01	0.00E-01	0.00E-01
XE138	0.00E-01	0.00E-01	0.00E-01	0.00E-01	0.00E-01	0.00E-01	0.00E-01	0.00E-01
CR 51	1.59E+02	2.68E+04	0.00E-01	0.00E-01	3.49E+01	8.84E+01	2.28E+02	0.00E-01
MN 54	3.52E+04	3.64E+05	0.00E-01	1.77E+05	5.29E+04	0.00E-01	0.00E-01	0.00E-01
FE 59	5.20E+06	3.17E+07	5.77E+06	1.35E+07	0.00E-01	0.00E-01	4.25E+06	0.00E-01
CO 58	8.56E+05	5.10E+06	0.00E-01	3.71E+05	0.00E-01	0.00E-01	0.00E-01	0.00E-01
CO 60	3.30E+06	1.91E+07	0.00E-01	1.46E+06	0.00E-01	0.00E-01	0.00E-01	0.00E-01
ZN 65	1.16E+07	1.05E+07	7.13E+06	2.47E+07	1.58E+07	0.00E-01	0.00E-01	0.00E-01
SR 89	2.12E+05	8.81E+05	7.38E+06	0.00E-01	0.00E-01	0.00E-01	0.00E-01	0.00E-01
SR 90	2.57E+07	2.93E+07	1.28E+09	0.00E-01	0.00E-01	0.00E-01	0.00E-01	0.00E-01
ZR 95	8.62E+03	2.90E+07	3.99E+04	1.25E+04	1.84E+04	0.00E-01	0.00E-01	0.00E-01
SB124	1.68E+05	8.68E+06	4.31E+05	7.95E+03	0.00E-01	9.76E+02	3.77E+05	0.00E-01
CS134	1.44E+07	3.87E+05	1.32E+07	3.10E+07	9.86E+06	0.00E-01	3.77E+06	0.00E-01
CS136	7.48E+05	8.94E+04	2.83E+05	1.11E+06	6.05E+05	0.00E-01	9.54E+04	0.00E-01
CS137	8.94E+06	3.64E+05	1.93E+07	2.57E+07	8.75E+06	0.00E-01	3.39E+06	0.00E-01
BA140	4.63E+04	1.11E+06	7.19E+05	8.81E+02	2.99E+02	0.00E-01	5.93E+02	0.00E-01
CE141	2.52E+01	6.27E+05	3.30E+02	2.20E+02	1.03E+02	0.00E-01	0.00E-01	0.00E-01
CE144	1.65E+03	7.73E+06	3.08E+04	1.27E+04	7.61E+03	0.00E-01	0.00E-01	0.00E-01
I 131	1.05E+05	3.83E+04	1.39E+05	1.95E+05	3.36E+05	5.67E+07	0.00E-01	0.00E-01
I 133	2.54E-03	6.31E-03	4.91E-03	8.30E-03	1.46E-02	1.16E+00	0.00E-01	0.00E-01

DOSE TRANSFER FACTORS FOR RADIONUCLIDES IN EFFLUENT AIR
Computed by GASPAR II

AGE = TEENAGER
PATHWAY = VEGETABLES

	TOTAL BODY	GI-LLI	BONE	LIVER	KIDNEY	THYROID	LUNG	SKIN
				(mrem m^2)/Ci				
H 3	4.72E+01	4.72E+01	0.00E-01	4.72E+01	4.72E+01	4.72E+01	4.72E+01	4.72E+01
C 14	9.32E+03	9.32E+03	4.66E+04	9.32E+03	9.32E+03	9.32E+03	9.32E+03	9.32E+03
AR 41	0.00E-01	0.00E-01	0.00E-01	0.00E-01	0.00E-01	0.00E-01	0.00E-01	0.00E-01
KR 83m	0.00E-01	0.00E-01	0.00E-01	0.00E-01	0.00E-01	0.00E-01	0.00E-01	0.00E-01
KR 85m	0.00E-01	0.00E-01	0.00E-01	0.00E-01	0.00E-01	0.00E-01	0.00E-01	0.00E-01
KR 85	0.00E-01	0.00E-01	0.00E-01	0.00E-01	0.00E-01	0.00E-01	0.00E-01	0.00E-01
KR 87	0.00E-01	0.00E-01	0.00E-01	0.00E-01	0.00E-01	0.00E-01	0.00E-01	0.00E-01
KR 88	0.00E-01	0.00E-01	0.00E-01	0.00E-01	0.00E-01	0.00E-01	0.00E-01	0.00E-01
KR 89	0.00E-01	0.00E-01	0.00E-01	0.00E-01	0.00E-01	0.00E-01	0.00E-01	0.00E-01
KR 90	0.00E-01	0.00E-01	0.00E-01	0.00E-01	0.00E-01	0.00E-01	0.00E-01	0.00E-01
XE131m	0.00E-01	0.00E-01	0.00E-01	0.00E-01	0.00E-01	0.00E-01	0.00E-01	0.00E-01
XE133m	0.00E-01	0.00E-01	0.00E-01	0.00E-01	0.00E-01	0.00E-01	0.00E-01	0.00E-01
XE133	0.00E-01	0.00E-01	0.00E-01	0.00E-01	0.00E-01	0.00E-01	0.00E-01	0.00E-01
XE135m	0.00E-01	0.00E-01	0.00E-01	0.00E-01	0.00E-01	0.00E-01	0.00E-01	0.00E-01
XE135	0.00E-01	0.00E-01	0.00E-01	0.00E-01	0.00E-01	0.00E-01	0.00E-01	0.00E-01
XE137	0.00E-01	0.00E-01	0.00E-01	0.00E-01	0.00E-01	0.00E-01	0.00E-01	0.00E-01
XE138	0.00E-01	0.00E-01	0.00E-01	0.00E-01	0.00E-01	0.00E-01	0.00E-01	0.00E-01
CR 51	1.93E+03	3.23E+05	0.00E-01	0.00E-01	4.21E+02	1.07E+03	2.75E+03	0.00E-01
MN 54	2.81E+06	2.91E+07	0.00E-01	1.42E+07	4.21E+06	0.00E-01	0.00E-01	0.00E-01
FE 59	5.01E+06	3.07E+07	5.58E+06	1.30E+07	0.00E-01	0.00E-01	4.09E+06	0.00E-01
CO 58	3.11E+06	1.86E+07	0.00E-01	1.35E+06	0.00E-01	0.00E-01	0.00E-01	0.00E-01
CO 60	1.77E+07	1.02E+08	0.00E-01	7.86E+06	0.00E-01	0.00E-01	0.00E-01	0.00E-01
ZN 65	2.75E+07	2.50E+07	1.70E+07	5.89E+07	3.77E+07	0.00E-01	0.00E-01	0.00E-01
SR 89	1.39E+07	5.80E+07	4.88E+08	0.00E-01	0.00E-01	0.00E-01	0.00E-01	0.00E-01
SR 90	1.66E+09	1.90E+09	8.33E+10	0.00E-01	0.00E-01	0.00E-01	0.00E-01	0.00E-01
ZR 95	1.15E+04	3.87E+07	5.32E+04	1.68E+04	2.47E+04	0.00E-01	0.00E-01	0.00E-01
SB124	1.87E+06	9.63E+07	4.79E+06	8.81E+04	0.00E-01	1.09E+04	4.18E+06	0.00E-01
CS134	2.45E+08	6.56E+06	2.24E+08	5.29E+08	1.68E+08	0.00E-01	6.40E+07	0.00E-01
CS136	3.64E+06	4.37E+05	1.38E+06	5.42E+06	2.95E+06	0.00E-01	4.66E+05	0.00E-01
CS137	1.70E+08	6.94E+06	3.68E+08	4.88E+08	1.66E+08	0.00E-01	6.43E+07	0.00E-01
BA140	2.82E+05	6.75E+06	4.37E+06	5.36E+03	1.82E+03	0.00E-01	3.61E+03	0.00E-01
CE141	6.78E+02	1.69E+07	8.84E+03	5.89E+03	2.78E+03	0.00E-01	0.00E-01	0.00E-01
CE144	8.62E+04	4.02E+08	1.60E+06	6.62E+05	3.96E+05	0.00E-01	0.00E-01	0.00E-01
I 131	9.16E+05	3.36E+05	1.22E+06	1.70E+06	2.93E+06	4.98E+08	0.00E-01	0.00E-01
I 133	1.58E+04	3.93E+04	3.06E+04	5.20E+04	9.13E+04	7.26E+06	0.00E-01	0.00E-01

DOSE TRANSFER FACTORS FOR RADIONUCLIDES IN EFFLUENT AIR
Computed by GASPAR II

AGE = TEENAGER
PATHWAY = PLUME

	TOTAL BODY	GI-LLI	BONE	LIVER	KIDNEY	THYROID	LUNG	SKIN
				(mrem m^3)/(Ci sec)				
H 3	0.00E-01	0.00E-01	0.00E-01	0.00E-01	0.00E-01	0.00E-01	0.00E-01	0.00E-01
C 14	0.00E-01	0.00E-01	0.00E-01	0.00E-01	0.00E-01	0.00E-01	0.00E-01	0.00E-01
AR 41	1.96E+02	1.96E+02	1.96E+02	1.96E+02	1.96E+02	1.96E+02	1.96E+02	3.14E+02
KR 83m	1.68E-03	1.68E-03	1.68E-03	1.68E-03	1.68E-03	1.68E-03	9.38E-02	4.75E-01
KR 85m	2.60E+01	2.60E+01	2.60E+01	2.60E+01	2.60E+01	2.60E+01	2.66E+01	7.67E+01
KR 85	3.58E-01	3.58E-01	3.58E-01	3.58E-01	3.58E-01	3.58E-01	9.51E-01	4.28E+01
KR 87	1.32E+02	1.32E+02	1.32E+02	1.32E+02	1.32E+02	1.32E+02	1.35E+02	4.60E+02
KR 88	3.26E+02	3.26E+02	3.26E+02	3.26E+02	3.26E+02	3.26E+02	3.26E+02	4.50E+02
KR 89	3.68E+02	3.68E+02	3.68E+02	3.68E+02	3.68E+02	3.68E+02	3.71E+02	7.48E+02
KR 90	3.46E+02	3.46E+02	3.46E+02	3.46E+02	3.46E+02	3.46E+02	3.49E+02	6.33E+02
XE131m	2.03E+00	2.03E+00	2.03E+00	2.03E+00	2.03E+00	2.03E+00	2.38E+00	1.89E+01
XE133m	5.58E+00	5.58E+00	5.58E+00	5.58E+00	5.58E+00	5.58E+00	6.02E+00	3.96E+01
XE133	6.53E+00	6.53E+00	6.53E+00	6.53E+00	6.53E+00	6.53E+00	6.85E+00	1.84E+01
XE135m	6.91E+01	6.91E+01	6.91E+01	6.91E+01	6.91E+01	6.91E+01	6.94E+01	1.05E+02
XE135	4.02E+01	4.02E+01	4.02E+01	4.02E+01	4.02E+01	4.02E+01	4.09E+01	1.06E+02
XE137	3.15E+01	3.15E+01	3.15E+01	3.15E+01	3.15E+01	3.15E+01	3.55E+01	4.25E+02
XE138	1.96E+02	1.96E+02	1.96E+02	1.96E+02	1.96E+02	1.96E+02	1.97E+02	3.58E+02
CR 51	0.00E-01	0.00E-01	0.00E-01	0.00E-01	0.00E-01	0.00E-01	0.00E-01	0.00E-01
MN 54	0.00E-01	0.00E-01	0.00E-01	0.00E-01	0.00E-01	0.00E-01	0.00E-01	0.00E-01
FE 59	0.00E-01	0.00E-01	0.00E-01	0.00E-01	0.00E-01	0.00E-01	0.00E-01	0.00E-01
CO 58	0.00E-01	0.00E-01	0.00E-01	0.00E-01	0.00E-01	0.00E-01	0.00E-01	0.00E-01
CO 60	0.00E-01	0.00E-01	0.00E-01	0.00E-01	0.00E-01	0.00E-01	0.00E-01	0.00E-01
ZN 65	0.00E-01	0.00E-01	0.00E-01	0.00E-01	0.00E-01	0.00E-01	0.00E-01	0.00E-01
SR 89	0.00E-01	0.00E-01	0.00E-01	0.00E-01	0.00E-01	0.00E-01	0.00E-01	0.00E-01
SR 90	0.00E-01	0.00E-01	0.00E-01	0.00E-01	0.00E-01	0.00E-01	0.00E-01	0.00E-01
ZR 95	0.00E-01	0.00E-01	0.00E-01	0.00E-01	0.00E-01	0.00E-01	0.00E-01	0.00E-01
SB124	0.00E-01	0.00E-01	0.00E-01	0.00E-01	0.00E-01	0.00E-01	0.00E-01	0.00E-01
CS134	0.00E-01	0.00E-01	0.00E-01	0.00E-01	0.00E-01	0.00E-01	0.00E-01	0.00E-01
CS136	0.00E-01	0.00E-01	0.00E-01	0.00E-01	0.00E-01	0.00E-01	0.00E-01	0.00E-01
CS137	0.00E-01	0.00E-01	0.00E-01	0.00E-01	0.00E-01	0.00E-01	0.00E-01	0.00E-01
BA140	0.00E-01	0.00E-01	0.00E-01	0.00E-01	0.00E-01	0.00E-01	0.00E-01	0.00E-01
CE141	0.00E-01	0.00E-01	0.00E-01	0.00E-01	0.00E-01	0.00E-01	0.00E-01	0.00E-01
CE144	0.00E-01	0.00E-01	0.00E-01	0.00E-01	0.00E-01	0.00E-01	0.00E-01	0.00E-01
I 131	0.00E-01	0.00E-01	0.00E-01	0.00E-01	0.00E-01	0.00E-01	0.00E-01	0.00E-01
I 133	0.00E-01	0.00E-01	0.00E-01	0.00E-01	0.00E-01	0.00E-01	0.00E-01	0.00E-01

DOSE TRANSFER FACTORS FOR RADIONUCLIDES IN EFFLUENT AIR
Computed by GASPAR II

AGE = CHILD
PATHWAY = INHALATION

	TOTAL BODY	GI-LLI	BONE	LIVER	KIDNEY	THYROID	LUNG	SKIN
				(mrem m^3)/(Ci sec)				
H 3	2.03E+01	2.03E+01	0.00E-01	2.03E+01	2.03E+01	2.03E+01	2.03E+01	2.03E+01
C 14	2.13E+02	2.13E+02	1.14E+03	2.13E+02	2.13E+02	2.13E+02	2.13E+02	0.00E-01
AR 41	0.00E-01	0.00E-01	0.00E-01	0.00E-01	0.00E-01	0.00E-01	0.00E-01	0.00E-01
KR 83m	0.00E-01	0.00E-01	0.00E-01	0.00E-01	0.00E-01	0.00E-01	0.00E-01	0.00E-01
KR 85m	0.00E-01	0.00E-01	0.00E-01	0.00E-01	0.00E-01	0.00E-01	0.00E-01	0.00E-01
KR 85	0.00E-01	0.00E-01	0.00E-01	0.00E-01	0.00E-01	0.00E-01	0.00E-01	0.00E-01
KR 87	0.00E-01	0.00E-01	0.00E-01	0.00E-01	0.00E-01	0.00E-01	0.00E-01	0.00E-01
KR 88	0.00E-01	0.00E-01	0.00E-01	0.00E-01	0.00E-01	0.00E-01	0.00E-01	0.00E-01
KR 89	0.00E-01	0.00E-01	0.00E-01	0.00E-01	0.00E-01	0.00E-01	0.00E-01	0.00E-01
KR 90	0.00E-01	0.00E-01	0.00E-01	0.00E-01	0.00E-01	0.00E-01	0.00E-01	0.00E-01
XE131m	0.00E-01	0.00E-01	0.00E-01	0.00E-01	0.00E-01	0.00E-01	0.00E-01	0.00E-01
XE133m	0.00E-01	0.00E-01	0.00E-01	0.00E-01	0.00E-01	0.00E-01	0.00E-01	0.00E-01
XE133	0.00E-01	0.00E-01	0.00E-01	0.00E-01	0.00E-01	0.00E-01	0.00E-01	0.00E-01
XE135m	0.00E-01	0.00E-01	0.00E-01	0.00E-01	0.00E-01	0.00E-01	0.00E-01	0.00E-01
XE135	0.00E-01	0.00E-01	0.00E-01	0.00E-01	0.00E-01	0.00E-01	0.00E-01	0.00E-01
XE137	0.00E-01	0.00E-01	0.00E-01	0.00E-01	0.00E-01	0.00E-01	0.00E-01	0.00E-01
XE138	0.00E-01	0.00E-01	0.00E-01	0.00E-01	0.00E-01	0.00E-01	0.00E-01	0.00E-01
CR 51	4.88E+00	3.42E+01	0.00E-01	0.00E-01	7.70E-01	2.71E+00	5.39E+02	0.00E-01
MN 54	3.01E+02	7.26E+02	0.00E-01	1.36E+03	3.17E+02	0.00E-01	5.01E+04	0.00E-01
FE 59	5.29E+02	2.24E+03	6.56E+02	1.06E+03	0.00E-01	0.00E-01	4.02E+04	0.00E-01
CO 58	1.00E+02	1.09E+03	0.00E-01	5.61E+01	0.00E-01	0.00E-01	3.52E+04	0.00E-01
CO 60	7.19E+02	3.05E+03	0.00E-01	4.15E+02	0.00E-01	0.00E-01	2.24E+05	0.00E-01
ZN 65	2.23E+03	5.17E+02	1.35E+03	3.58E+03	2.26E+03	0.00E-01	3.16E+04	0.00E-01
SR 89	5.45E+02	5.29E+03	1.90E+04	0.00E-01	0.00E-01	0.00E-01	6.85E+04	0.00E-01
SR 90	2.43E+04	1.09E+04	1.22E+06	0.00E-01	0.00E-01	0.00E-01	4.69E+05	0.00E-01
ZR 95	1.17E+03	1.94E+03	6.02E+03	1.32E+03	1.89E+03	0.00E-01	7.07E+04	0.00E-01
SB124	6.34E+02	5.20E+03	1.82E+03	2.35E+01	0.00E-01	3.99E+00	1.03E+05	0.00E-01
CS134	7.13E+03	1.22E+02	2.06E+04	3.20E+04	1.05E+04	0.00E-01	3.83E+03	0.00E-01
CS136	3.68E+03	1.32E+02	2.06E+03	5.42E+03	3.03E+03	0.00E-01	4.60E+02	0.00E-01
CS137	4.06E+03	1.15E+02	2.87E+04	2.61E+04	8.94E+03	0.00E-01	3.30E+03	0.00E-01
BA140	1.37E+02	3.23E+03	2.35E+03	2.05E+00	6.69E-01	0.00E-01	5.51E+04	0.00E-01
CE141	9.19E+01	1.79E+03	1.24E+03	6.18E+02	2.71E+02	0.00E-01	1.72E+04	0.00E-01
CE144	1.15E+04	1.23E+04	2.15E+05	6.72E+04	3.71E+04	0.00E-01	3.80E+05	0.00E-01
I 131	8.65E+02	9.00E+01	1.52E+03	1.52E+03	2.50E+03	5.17E+05	0.00E-01	0.00E-01
I 133	2.44E+02	1.74E+02	5.26E+02	6.43E+02	1.07E+03	1.22E+05	0.00E-01	0.00E-01

DOSE TRANSFER FACTORS FOR RADIONUCLIDES IN EFFLUENT AIR
Computed by GASPAR II

AGE = CHILD
PATHWAY = GROUND PLANE

	TOTAL BODY	GI-LLI	BONE	LIVER	KIDNEY	THYROID	LUNG	SKIN
				(mrem m^2)/Ci				
H 3	0.00E-01	0.00E-01	0.00E-01	0.00E-01	0.00E-01	0.00E-01	0.00E-01	0.00E-01
C 14	0.00E-01	0.00E-01	0.00E-01	0.00E-01	0.00E-01	0.00E-01	0.00E-01	0.00E-01
AR 41	0.00E-01	0.00E-01	0.00E-01	0.00E-01	0.00E-01	0.00E-01	0.00E-01	0.00E-01
KR 83m	0.00E-01	0.00E-01	0.00E-01	0.00E-01	0.00E-01	0.00E-01	0.00E-01	0.00E-01
KR 85m	0.00E-01	0.00E-01	0.00E-01	0.00E-01	0.00E-01	0.00E-01	0.00E-01	0.00E-01
KR 85	0.00E-01	0.00E-01	0.00E-01	0.00E-01	0.00E-01	0.00E-01	0.00E-01	0.00E-01
KR 87	0.00E-01	0.00E-01	0.00E-01	0.00E-01	0.00E-01	0.00E-01	0.00E-01	0.00E-01
KR 88	0.00E-01	0.00E-01	0.00E-01	0.00E-01	0.00E-01	0.00E-01	0.00E-01	0.00E-01
KR 89	0.00E-01	0.00E-01	0.00E-01	0.00E-01	0.00E-01	0.00E-01	0.00E-01	0.00E-01
KR 90	0.00E-01	0.00E-01	0.00E-01	0.00E-01	0.00E-01	0.00E-01	0.00E-01	0.00E-01
XE131m	0.00E-01	0.00E-01	0.00E-01	0.00E-01	0.00E-01	0.00E-01	0.00E-01	0.00E-01
XE133m	0.00E-01	0.00E-01	0.00E-01	0.00E-01	0.00E-01	0.00E-01	0.00E-01	0.00E-01
XE133	0.00E-01	0.00E-01	0.00E-01	0.00E-01	0.00E-01	0.00E-01	0.00E-01	0.00E-01
XE135m	0.00E-01	0.00E-01	0.00E-01	0.00E-01	0.00E-01	0.00E-01	0.00E-01	0.00E-01
XE135	0.00E-01	0.00E-01	0.00E-01	0.00E-01	0.00E-01	0.00E-01	0.00E-01	0.00E-01
XE137	0.00E-01	0.00E-01	0.00E-01	0.00E-01	0.00E-01	0.00E-01	0.00E-01	0.00E-01
XE138	0.00E-01	0.00E-01	0.00E-01	0.00E-01	0.00E-01	0.00E-01	0.00E-01	0.00E-01
CR 51	1.47E+05	1.47E+05	1.47E+05	1.47E+05	1.47E+05	1.47E+05	1.47E+05	1.74E+05
MN 54	4.37E+07	4.37E+07	4.37E+07	4.37E+07	4.37E+07	4.37E+07	4.37E+07	5.13E+07
FE 59	8.65E+06	8.65E+06	8.65E+06	8.65E+06	8.65E+06	8.65E+06	8.65E+06	1.01E+07
CO 58	1.20E+07	1.20E+07	1.20E+07	1.20E+07	1.20E+07	1.20E+07	1.20E+07	1.41E+07
CO 60	6.81E+08	6.81E+08	6.81E+08	6.81E+08	6.81E+08	6.81E+08	6.81E+08	8.02E+08
ZN 65	2.36E+07	2.36E+07	2.36E+07	2.36E+07	2.36E+07	2.36E+07	2.36E+07	2.72E+07
SR 89	6.85E+02	6.85E+02	6.85E+02	6.85E+02	6.85E+02	6.85E+02	6.85E+02	7.95E+02
SR 90	0.00E-01	0.00E-01	0.00E-01	0.00E-01	0.00E-01	0.00E-01	0.00E-01	0.00E-01
ZR 95	7.76E+06	7.76E+06	7.76E+06	7.76E+06	7.76E+06	7.76E+06	7.76E+06	9.03E+06
SB124	1.90E+07	1.90E+07	1.90E+07	1.90E+07	1.90E+07	1.90E+07	1.90E+07	2.19E+07
CS134	2.17E+08	2.17E+08	2.17E+08	2.17E+08	2.17E+08	2.17E+08	2.17E+08	2.53E+08
CS136	4.75E+06	4.75E+06	4.75E+06	4.75E+06	4.75E+06	4.75E+06	4.75E+06	5.39E+06
CS137	3.26E+08	3.26E+08	3.26E+08	3.26E+08	3.26E+08	3.26E+08	3.26E+08	3.80E+08
BA140	6.50E+05	6.50E+05	6.50E+05	6.50E+05	6.50E+05	6.50E+05	6.50E+05	7.45E+05
CE141	4.34E+05	4.34E+05	4.34E+05	4.34E+05	4.34E+05	4.34E+05	4.34E+05	4.88E+05
CE144	2.21E+06	2.21E+06	2.21E+06	2.21E+06	2.21E+06	2.21E+06	2.21E+06	2.55E+06
I 131	2.73E+05	2.73E+05	2.73E+05	2.73E+05	2.73E+05	2.73E+05	2.73E+05	3.33E+05
I 133	3.90E+04	3.90E+04	3.90E+04	3.90E+04	3.90E+04	3.90E+04	3.90E+04	4.72E+04

DOSE TRANSFER FACTORS FOR RADIONUCLIDES IN EFFLUENT AIR
Computed by GASPAR II

AGE = CHILD
PATHWAY = COW-MILK

	TOTAL BODY	GI-LLI	BONE	LIVER	KIDNEY	THYROID	LUNG	SKIN
				(mrem m^2)/Ci				
H 3	2.87E+01	2.87E+01	0.00E-01	2.87E+01	2.87E+01	2.87E+01	2.87E+01	2.87E+01
C 14	1.06E+04	1.06E+04	5.26E+04	1.06E+04	1.06E+04	1.06E+04	1.06E+04	1.06E+04
AR 41	0.00E-01	0.00E-01	0.00E-01	0.00E-01	0.00E-01	0.00E-01	0.00E-01	0.00E-01
KR 83m	0.00E-01	0.00E-01	0.00E-01	0.00E-01	0.00E-01	0.00E-01	0.00E-01	0.00E-01
KR 85m	0.00E-01	0.00E-01	0.00E-01	0.00E-01	0.00E-01	0.00E-01	0.00E-01	0.00E-01
KR 85	0.00E-01	0.00E-01	0.00E-01	0.00E-01	0.00E-01	0.00E-01	0.00E-01	0.00E-01
KR 87	0.00E-01	0.00E-01	0.00E-01	0.00E-01	0.00E-01	0.00E-01	0.00E-01	0.00E-01
KR 88	0.00E-01	0.00E-01	0.00E-01	0.00E-01	0.00E-01	0.00E-01	0.00E-01	0.00E-01
KR 89	0.00E-01	0.00E-01	0.00E-01	0.00E-01	0.00E-01	0.00E-01	0.00E-01	0.00E-01
KR 90	0.00E-01	0.00E-01	0.00E-01	0.00E-01	0.00E-01	0.00E-01	0.00E-01	0.00E-01
XE131m	0.00E-01	0.00E-01	0.00E-01	0.00E-01	0.00E-01	0.00E-01	0.00E-01	0.00E-01
XE133m	0.00E-01	0.00E-01	0.00E-01	0.00E-01	0.00E-01	0.00E-01	0.00E-01	0.00E-01
XE133	0.00E-01	0.00E-01	0.00E-01	0.00E-01	0.00E-01	0.00E-01	0.00E-01	0.00E-01
XE135m	0.00E-01	0.00E-01	0.00E-01	0.00E-01	0.00E-01	0.00E-01	0.00E-01	0.00E-01
XE135	0.00E-01	0.00E-01	0.00E-01	0.00E-01	0.00E-01	0.00E-01	0.00E-01	0.00E-01
XE137	0.00E-01	0.00E-01	0.00E-01	0.00E-01	0.00E-01	0.00E-01	0.00E-01	0.00E-01
XE138	0.00E-01	0.00E-01	0.00E-01	0.00E-01	0.00E-01	0.00E-01	0.00E-01	0.00E-01
CR 51	2.88E+03	1.53E+05	0.00E-01	0.00E-01	4.37E+02	1.60E+03	2.92E+03	0.00E-01
MN 54	1.41E+05	4.44E+05	0.00E-01	5.29E+05	1.49E+05	0.00E-01	0.00E-01	0.00E-01
FE 59	2.63E+06	5.51E+06	3.26E+06	5.29E+06	0.00E-01	0.00E-01	1.53E+06	0.00E-01
CO 58	9.79E+05	1.87E+06	0.00E-01	3.20E+05	0.00E-01	0.00E-01	0.00E-01	0.00E-01
CO 60	3.20E+06	5.99E+06	0.00E-01	1.08E+06	0.00E-01	0.00E-01	0.00E-01	0.00E-01
ZN 65	1.95E+08	5.51E+07	1.18E+08	3.14E+08	1.98E+08	0.00E-01	0.00E-01	0.00E-01
SR 89	5.48E+06	7.45E+06	1.92E+08	0.00E-01	0.00E-01	0.00E-01	0.00E-01	0.00E-01
SR 90	4.40E+08	1.95E+08	2.18E+10	0.00E-01	0.00E-01	0.00E-01	0.00E-01	0.00E-01
ZR 95	1.99E+01	2.33E+04	1.02E+02	2.23E+01	3.20E+01	0.00E-01	0.00E-01	0.00E-01
SB124	1.01E+06	1.81E+07	2.89E+06	3.74E+04	0.00E-01	6.40E+03	1.61E+06	0.00E-01
CS134	1.97E+08	5.04E+06	5.70E+08	9.38E+08	2.90E+08	0.00E-01	1.04E+08	0.00E-01
CS136	5.42E+07	2.95E+06	3.05E+07	8.40E+07	4.47E+07	0.00E-01	6.65E+06	0.00E-01
CS137	1.21E+08	5.17E+06	8.59E+08	8.24E+08	2.68E+08	0.00E-01	9.63E+07	0.00E-01
BA140	2.07E+05	1.80E+06	3.55E+06	3.11E+03	1.01E+03	0.00E-01	1.85E+03	0.00E-01
CE141	4.53E+01	3.80E+05	6.12E+02	3.05E+02	1.33E+02	0.00E-01	0.00E-01	0.00E-01
CE144	2.17E+03	3.33E+06	4.06E+04	1.27E+04	7.07E+03	0.00E-01	0.00E-01	0.00E-01
I 131	1.16E+07	1.82E+06	2.03E+07	2.04E+07	3.36E+07	6.75E+09	0.00E-01	0.00E-01
I 133	1.28E+05	1.36E+05	2.73E+05	3.36E+05	5.61E+05	6.27E+07	0.00E-01	0.00E-01

DOSE TRANSFER FACTORS FOR RADIONUCLIDES IN EFFLUENT AIR
Computed by GASPAR II

AGE = CHILD
PATHWAY = GOAT-MILK

	TOTAL BODY	GI-LLI	BONE	LIVER	KIDNEY	THYROID	LUNG	SKIN
				(mrem m^2)/Ci				
H 3	5.86E+01	5.86E+01	0.00E-01	5.86E+01	5.86E+01	5.86E+01	5.86E+01	5.86E+01
C 14	1.06E+04	1.06E+04	5.26E+04	1.06E+04	1.06E+04	1.06E+04	1.06E+04	1.06E+04
AR 41	0.00E-01	0.00E-01	0.00E-01	0.00E-01	0.00E-01	0.00E-01	0.00E-01	0.00E-01
KR 83m	0.00E-01	0.00E-01	0.00E-01	0.00E-01	0.00E-01	0.00E-01	0.00E-01	0.00E-01
KR 85m	0.00E-01	0.00E-01	0.00E-01	0.00E-01	0.00E-01	0.00E-01	0.00E-01	0.00E-01
KR 85	0.00E-01	0.00E-01	0.00E-01	0.00E-01	0.00E-01	0.00E-01	0.00E-01	0.00E-01
KR 87	0.00E-01	0.00E-01	0.00E-01	0.00E-01	0.00E-01	0.00E-01	0.00E-01	0.00E-01
KR 88	0.00E-01	0.00E-01	0.00E-01	0.00E-01	0.00E-01	0.00E-01	0.00E-01	0.00E-01
KR 89	0.00E-01	0.00E-01	0.00E-01	0.00E-01	0.00E-01	0.00E-01	0.00E-01	0.00E-01
KR 90	0.00E-01	0.00E-01	0.00E-01	0.00E-01	0.00E-01	0.00E-01	0.00E-01	0.00E-01
XE131m	0.00E-01	0.00E-01	0.00E-01	0.00E-01	0.00E-01	0.00E-01	0.00E-01	0.00E-01
XE133m	0.00E-01	0.00E-01	0.00E-01	0.00E-01	0.00E-01	0.00E-01	0.00E-01	0.00E-01
XE133	0.00E-01	0.00E-01	0.00E-01	0.00E-01	0.00E-01	0.00E-01	0.00E-01	0.00E-01
XE135m	0.00E-01	0.00E-01	0.00E-01	0.00E-01	0.00E-01	0.00E-01	0.00E-01	0.00E-01
XE135	0.00E-01	0.00E-01	0.00E-01	0.00E-01	0.00E-01	0.00E-01	0.00E-01	0.00E-01
XE137	0.00E-01	0.00E-01	0.00E-01	0.00E-01	0.00E-01	0.00E-01	0.00E-01	0.00E-01
XE138	0.00E-01	0.00E-01	0.00E-01	0.00E-01	0.00E-01	0.00E-01	0.00E-01	0.00E-01
CR 51	3.45E+02	1.83E+04	0.00E-01	0.00E-01	5.23E+01	1.92E+02	3.52E+02	0.00E-01
MN 54	1.70E+04	5.36E+04	0.00E-01	6.37E+04	1.78E+04	0.00E-01	0.00E-01	0.00E-01
FE 59	3.42E+05	7.16E+05	4.25E+05	6.88E+05	0.00E-01	0.00E-01	1.99E+05	0.00E-01
CO 58	1.18E+05	2.24E+05	0.00E-01	3.83E+04	0.00E-01	0.00E-01	0.00E-01	0.00E-01
CO 60	3.83E+05	7.19E+05	0.00E-01	1.30E+05	0.00E-01	0.00E-01	0.00E-01	0.00E-01
ZN 65	2.34E+07	6.62E+06	1.41E+07	3.77E+07	2.37E+07	0.00E-01	0.00E-01	0.00E-01
SR 89	1.15E+07	1.56E+07	4.02E+08	0.00E-01	0.00E-01	0.00E-01	0.00E-01	0.00E-01
SR 90	9.22E+08	4.09E+08	4.60E+10	0.00E-01	0.00E-01	0.00E-01	0.00E-01	0.00E-01
ZR 95	2.39E+00	2.80E+03	1.22E+01	2.68E+00	3.83E+00	0.00E-01	0.00E-01	0.00E-01
SB124	1.22E+05	2.17E+06	3.49E+05	4.50E+03	0.00E-01	7.67E+02	1.93E+05	0.00E-01
CS134	5.93E+08	1.51E+07	1.71E+09	2.81E+09	8.71E+08	0.00E-01	3.12E+08	0.00E-01
CS136	1.63E+08	8.84E+06	9.16E+07	2.52E+08	1.34E+08	0.00E-01	2.00E+07	0.00E-01
CS137	3.64E+08	1.55E+07	2.58E+09	2.47E+09	8.05E+08	0.00E-01	2.89E+08	0.00E-01
BA140	2.48E+04	2.16E+05	4.25E+05	3.74E+02	1.21E+02	0.00E-01	2.22E+02	0.00E-01
CE141	5.42E+00	4.56E+04	7.32E+01	3.64E+01	1.60E+01	0.00E-01	0.00E-01	0.00E-01
CE144	2.60E+02	3.99E+05	4.88E+03	1.53E+03	8.46E+02	0.00E-01	0.00E-01	0.00E-01
I 131	1.39E+07	2.18E+06	2.44E+07	2.45E+07	4.02E+07	8.11E+09	0.00E-01	0.00E-01
I 133	1.53E+05	1.63E+05	3.26E+05	4.06E+05	6.75E+05	7.51E+07	0.00E-01	0.00E-01

DOSE TRANSFER FACTORS FOR RADIONUCLIDES IN EFFLUENT AIR
Computed by GASPAR II

AGE = CHILD
PATHWAY = ANIMAL-MEAT

	TOTAL BODY	GI-LLI	BONE	LIVER	KIDNEY	THYROID	LUNG	SKIN
				(mrem m^2)/Ci				
H 3	4.28E+00	4.28E+00	0.00E-01	4.28E+00	4.28E+00	4.28E+00	4.28E+00	4.28E+00
C 14	3.39E+03	3.39E+03	1.69E+04	3.39E+03	3.39E+03	3.39E+03	3.39E+03	3.39E+03
AR 41	0.00E-01	0.00E-01	0.00E-01	0.00E-01	0.00E-01	0.00E-01	0.00E-01	0.00E-01
KR 83m	0.00E-01	0.00E-01	0.00E-01	0.00E-01	0.00E-01	0.00E-01	0.00E-01	0.00E-01
KR 85m	0.00E-01	0.00E-01	0.00E-01	0.00E-01	0.00E-01	0.00E-01	0.00E-01	0.00E-01
KR 85	0.00E-01	0.00E-01	0.00E-01	0.00E-01	0.00E-01	0.00E-01	0.00E-01	0.00E-01
KR 87	0.00E-01	0.00E-01	0.00E-01	0.00E-01	0.00E-01	0.00E-01	0.00E-01	0.00E-01
KR 88	0.00E-01	0.00E-01	0.00E-01	0.00E-01	0.00E-01	0.00E-01	0.00E-01	0.00E-01
KR 89	0.00E-01	0.00E-01	0.00E-01	0.00E-01	0.00E-01	0.00E-01	0.00E-01	0.00E-01
KR 90	0.00E-01	0.00E-01	0.00E-01	0.00E-01	0.00E-01	0.00E-01	0.00E-01	0.00E-01
XE131m	0.00E-01	0.00E-01	0.00E-01	0.00E-01	0.00E-01	0.00E-01	0.00E-01	0.00E-01
XE133m	0.00E-01	0.00E-01	0.00E-01	0.00E-01	0.00E-01	0.00E-01	0.00E-01	0.00E-01
XE133	0.00E-01	0.00E-01	0.00E-01	0.00E-01	0.00E-01	0.00E-01	0.00E-01	0.00E-01
XE135m	0.00E-01	0.00E-01	0.00E-01	0.00E-01	0.00E-01	0.00E-01	0.00E-01	0.00E-01
XE135	0.00E-01	0.00E-01	0.00E-01	0.00E-01	0.00E-01	0.00E-01	0.00E-01	0.00E-01
XE137	0.00E-01	0.00E-01	0.00E-01	0.00E-01	0.00E-01	0.00E-01	0.00E-01	0.00E-01
XE138	0.00E-01	0.00E-01	0.00E-01	0.00E-01	0.00E-01	0.00E-01	0.00E-01	0.00E-01
CR 51	2.48E+02	1.32E+04	0.00E-01	0.00E-01	3.77E+01	1.38E+02	2.52E+02	0.00E-01
MN 54	5.39E+04	1.70E+05	0.00E-01	2.02E+05	5.67E+04	0.00E-01	0.00E-01	0.00E-01
FE 59	8.24E+06	1.72E+07	1.02E+07	1.65E+07	0.00E-01	0.00E-01	4.79E+06	0.00E-01
CO 58	1.32E+06	2.53E+06	0.00E-01	4.34E+05	0.00E-01	0.00E-01	0.00E-01	0.00E-01
CO 60	5.13E+06	9.63E+06	0.00E-01	1.74E+06	0.00E-01	0.00E-01	0.00E-01	0.00E-01
ZN 65	1.77E+07	5.01E+06	1.07E+07	2.85E+07	1.80E+07	0.00E-01	0.00E-01	0.00E-01
SR 89	3.99E+05	5.42E+05	1.40E+07	0.00E-01	0.00E-01	0.00E-01	0.00E-01	0.00E-01
SR 90	4.09E+07	1.82E+07	2.03E+09	0.00E-01	0.00E-01	0.00E-01	0.00E-01	0.00E-01
ZR 95	1.38E+04	1.62E+07	7.07E+04	1.55E+04	2.22E+04	0.00E-01	0.00E-01	0.00E-01
SB124	2.73E+05	4.88E+06	7.80E+05	1.01E+04	0.00E-01	1.72E+03	4.34E+05	0.00E-01
CS134	8.05E+06	2.06E+05	2.33E+07	3.80E+07	1.18E+07	0.00E-01	4.25E+06	0.00E-01
CS136	8.68E+05	4.72E+04	4.88E+05	1.34E+06	7.13E+05	0.00E-01	1.06E+05	0.00E-01
CS137	5.01E+06	2.13E+05	3.55E+07	3.39E+07	1.11E+07	0.00E-01	3.99E+06	0.00E-01
BA140	7.76E+04	6.72E+05	1.33E+06	1.16E+03	3.80E+02	0.00E-01	6.94E+02	0.00E-01
CE141	4.60E+01	3.87E+05	6.21E+02	3.09E+02	1.36E+02	0.00E-01	0.00E-01	0.00E-01
CE144	3.10E+03	4.75E+06	5.80E+04	1.82E+04	1.01E+04	0.00E-01	0.00E-01	0.00E-01
I 131	1.47E+05	2.31E+04	2.58E+05	2.59E+05	4.25E+05	8.56E+07	0.00E-01	0.00E-01
I 133	4.25E-03	4.53E-03	9.10E-03	1.12E-02	1.88E-02	2.09E+00	0.00E-01	0.00E-01

DOSE TRANSFER FACTORS FOR RADIONUCLIDES IN EFFLUENT AIR
Computed by GASPAR II

AGE = CHILD
PATHWAY = VEGETABLES

	TOTAL BODY	GI-LLI	BONE	LIVER	KIDNEY	THYROID	LUNG	SKIN
				(mrem m^2)/Ci				
H 3	7.32E+01	7.32E+01	0.00E-01	7.32E+01	7.32E+01	7.32E+01	7.32E+01	7.32E+01
C 14	2.24E+04	2.24E+04	1.12E+05	2.24E+04	2.24E+04	2.24E+04	2.24E+04	2.24E+04
AR 41	0.00E-01	0.00E-01	0.00E-01	0.00E-01	0.00E-01	0.00E-01	0.00E-01	0.00E-01
KR 83m	0.00E-01	0.00E-01	0.00E-01	0.00E-01	0.00E-01	0.00E-01	0.00E-01	0.00E-01
KR 85m	0.00E-01	0.00E-01	0.00E-01	0.00E-01	0.00E-01	0.00E-01	0.00E-01	0.00E-01
KR 85	0.00E-01	0.00E-01	0.00E-01	0.00E-01	0.00E-01	0.00E-01	0.00E-01	0.00E-01
KR 87	0.00E-01	0.00E-01	0.00E-01	0.00E-01	0.00E-01	0.00E-01	0.00E-01	0.00E-01
KR 88	0.00E-01	0.00E-01	0.00E-01	0.00E-01	0.00E-01	0.00E-01	0.00E-01	0.00E-01
KR 89	0.00E-01	0.00E-01	0.00E-01	0.00E-01	0.00E-01	0.00E-01	0.00E-01	0.00E-01
KR 90	0.00E-01	0.00E-01	0.00E-01	0.00E-01	0.00E-01	0.00E-01	0.00E-01	0.00E-01
XE131m	0.00E-01	0.00E-01	0.00E-01	0.00E-01	0.00E-01	0.00E-01	0.00E-01	0.00E-01
XE133m	0.00E-01	0.00E-01	0.00E-01	0.00E-01	0.00E-01	0.00E-01	0.00E-01	0.00E-01
XE133	0.00E-01	0.00E-01	0.00E-01	0.00E-01	0.00E-01	0.00E-01	0.00E-01	0.00E-01
XE135m	0.00E-01	0.00E-01	0.00E-01	0.00E-01	0.00E-01	0.00E-01	0.00E-01	0.00E-01
XE135	0.00E-01	0.00E-01	0.00E-01	0.00E-01	0.00E-01	0.00E-01	0.00E-01	0.00E-01
XE137	0.00E-01	0.00E-01	0.00E-01	0.00E-01	0.00E-01	0.00E-01	0.00E-01	0.00E-01
XE138	0.00E-01	0.00E-01	0.00E-01	0.00E-01	0.00E-01	0.00E-01	0.00E-01	0.00E-01
CR 51	3.68E+03	1.94E+05	0.00E-01	0.00E-01	5.55E+02	2.03E+03	3.71E+03	0.00E-01
MN 54	5.51E+06	1.74E+07	0.00E-01	2.07E+07	5.80E+06	0.00E-01	0.00E-01	0.00E-01
FE 59	9.95E+06	2.08E+07	1.23E+07	2.00E+07	0.00E-01	0.00E-01	5.80E+06	0.00E-01
CO 58	6.08E+06	1.16E+07	0.00E-01	1.99E+06	0.00E-01	0.00E-01	0.00E-01	0.00E-01
CO 60	3.52E+07	6.62E+07	0.00E-01	1.19E+07	0.00E-01	0.00E-01	0.00E-01	0.00E-01
ZN 65	5.39E+07	1.52E+07	3.26E+07	8.68E+07	5.45E+07	0.00E-01	0.00E-01	0.00E-01
SR 89	3.30E+07	4.47E+07	1.16E+09	0.00E-01	0.00E-01	0.00E-01	0.00E-01	0.00E-01
SR 90	3.39E+09	1.51E+09	1.69E+11	0.00E-01	0.00E-01	0.00E-01	0.00E-01	0.00E-01
ZR 95	2.33E+04	2.73E+07	1.19E+05	2.62E+04	3.74E+04	0.00E-01	0.00E-01	0.00E-01
SB124	3.83E+06	6.81E+07	1.09E+07	1.42E+05	0.00E-01	2.41E+04	6.05E+06	0.00E-01
CS134	1.75E+08	4.47E+06	5.07E+08	8.30E+08	2.58E+08	0.00E-01	9.25E+07	0.00E-01
CS136	4.63E+06	2.50E+05	2.59E+06	7.13E+06	3.80E+06	0.00E-01	5.67E+05	0.00E-01
CS137	1.22E+08	5.20E+06	8.65E+08	8.27E+08	2.70E+08	0.00E-01	9.70E+07	0.00E-01
BA140	5.10E+05	4.44E+06	8.78E+06	7.67E+03	2.50E+03	0.00E-01	4.56E+03	0.00E-01
CE141	1.52E+03	1.27E+07	2.05E+04	1.02E+04	4.47E+03	0.00E-01	0.00E-01	0.00E-01
CE144	2.06E+05	3.16E+08	3.87E+06	1.21E+06	6.69E+05	0.00E-01	0.00E-01	0.00E-01
I 131	1.29E+06	2.03E+05	2.27E+06	2.28E+06	3.74E+06	7.54E+08	0.00E-01	0.00E-01
I 133	2.61E+04	2.78E+04	5.58E+04	6.91E+04	1.15E+05	1.28E+07	0.00E-01	0.00E-01

DOSE TRANSFER FACTORS FOR RADIONUCLIDES IN EFFLUENT AIR
Computed by GASPAR II

AGE = CHILD
PATHWAY = PLUME

	TOTAL BODY	GI-LLI	BONE	LIVER	KIDNEY	THYROID	LUNG	SKIN
				(mrem m^3)/(Ci sec)				
H 3	0.00E-01	0.00E-01	0.00E-01	0.00E-01	0.00E-01	0.00E-01	0.00E-01	0.00E-01
C 14	0.00E-01	0.00E-01	0.00E-01	0.00E-01	0.00E-01	0.00E-01	0.00E-01	0.00E-01
AR 41	1.96E+02	1.96E+02	1.96E+02	1.96E+02	1.96E+02	1.96E+02	1.96E+02	3.14E+02
KR 83m	1.68E-03	1.68E-03	1.68E-03	1.68E-03	1.68E-03	1.68E-03	9.38E-02	4.75E-01
KR 85m	2.60E+01	2.60E+01	2.60E+01	2.60E+01	2.60E+01	2.60E+01	2.66E+01	7.67E+01
KR 85	3.58E-01	3.58E-01	3.58E-01	3.58E-01	3.58E-01	3.58E-01	9.51E-01	4.28E+01
KR 87	1.32E+02	1.32E+02	1.32E+02	1.32E+02	1.32E+02	1.32E+02	1.35E+02	4.60E+02
KR 88	3.26E+02	3.26E+02	3.26E+02	3.26E+02	3.26E+02	3.26E+02	3.26E+02	4.50E+02
KR 89	3.68E+02	3.68E+02	3.68E+02	3.68E+02	3.68E+02	3.68E+02	3.71E+02	7.48E+02
KR 90	3.46E+02	3.46E+02	3.46E+02	3.46E+02	3.46E+02	3.46E+02	3.49E+02	6.33E+02
XE131m	2.03E+00	2.03E+00	2.03E+00	2.03E+00	2.03E+00	2.03E+00	2.38E+00	1.89E+01
XE133m	5.58E+00	5.58E+00	5.58E+00	5.58E+00	5.58E+00	5.58E+00	6.02E+00	3.96E+01
XE133	6.53E+00	6.53E+00	6.53E+00	6.53E+00	6.53E+00	6.53E+00	6.85E+00	1.84E+01
XE135m	6.91E+01	6.91E+01	6.91E+01	6.91E+01	6.91E+01	6.91E+01	6.94E+01	1.05E+02
XE135	4.02E+01	4.02E+01	4.02E+01	4.02E+01	4.02E+01	4.02E+01	4.09E+01	1.06E+02
XE137	3.15E+01	3.15E+01	3.15E+01	3.15E+01	3.15E+01	3.15E+01	3.55E+01	4.25E+02
XE138	1.96E+02	1.96E+02	1.96E+02	1.96E+02	1.96E+02	1.96E+02	1.97E+02	3.58E+02
CR 51	0.00E-01	0.00E-01	0.00E-01	0.00E-01	0.00E-01	0.00E-01	0.00E-01	0.00E-01
MN 54	0.00E-01	0.00E-01	0.00E-01	0.00E-01	0.00E-01	0.00E-01	0.00E-01	0.00E-01
FE 59	0.00E-01	0.00E-01	0.00E-01	0.00E-01	0.00E-01	0.00E-01	0.00E-01	0.00E-01
CO 58	0.00E-01	0.00E-01	0.00E-01	0.00E-01	0.00E-01	0.00E-01	0.00E-01	0.00E-01
CO 60	0.00E-01	0.00E-01	0.00E-01	0.00E-01	0.00E-01	0.00E-01	0.00E-01	0.00E-01
ZN 65	0.00E-01	0.00E-01	0.00E-01	0.00E-01	0.00E-01	0.00E-01	0.00E-01	0.00E-01
SR 89	0.00E-01	0.00E-01	0.00E-01	0.00E-01	0.00E-01	0.00E-01	0.00E-01	0.00E-01
SR 90	0.00E-01	0.00E-01	0.00E-01	0.00E-01	0.00E-01	0.00E-01	0.00E-01	0.00E-01
ZR 95	0.00E-01	0.00E-01	0.00E-01	0.00E-01	0.00E-01	0.00E-01	0.00E-01	0.00E-01
SB124	0.00E-01	0.00E-01	0.00E-01	0.00E-01	0.00E-01	0.00E-01	0.00E-01	0.00E-01
CS134	0.00E-01	0.00E-01	0.00E-01	0.00E-01	0.00E-01	0.00E-01	0.00E-01	0.00E-01
CS136	0.00E-01	0.00E-01	0.00E-01	0.00E-01	0.00E-01	0.00E-01	0.00E-01	0.00E-01
CS137	0.00E-01	0.00E-01	0.00E-01	0.00E-01	0.00E-01	0.00E-01	0.00E-01	0.00E-01
BA140	0.00E-01	0.00E-01	0.00E-01	0.00E-01	0.00E-01	0.00E-01	0.00E-01	0.00E-01
CE141	0.00E-01	0.00E-01	0.00E-01	0.00E-01	0.00E-01	0.00E-01	0.00E-01	0.00E-01
CE144	0.00E-01	0.00E-01	0.00E-01	0.00E-01	0.00E-01	0.00E-01	0.00E-01	0.00E-01
I 131	0.00E-01	0.00E-01	0.00E-01	0.00E-01	0.00E-01	0.00E-01	0.00E-01	0.00E-01
I 133	0.00E-01	0.00E-01	0.00E-01	0.00E-01	0.00E-01	0.00E-01	0.00E-01	0.00E-01

DOSE TRANSFER FACTORS FOR RADIONUCLIDES IN EFFLUENT AIR
Computed by GASPAR II

AGE = INFANT
PATHWAY = INHALATION

	TOTAL BODY	GI-LLI	BONE	LIVER	KIDNEY	THYROID	LUNG	SKIN
				(mrem m^3)/(Ci sec)				
H 3	1.17E+01	1.17E+01	0.00E-01	1.17E+01	1.17E+01	1.17E+01	1.17E+01	1.17E+01
C 14	1.68E+02	1.68E+02	8.39E+02	1.68E+02	1.68E+02	1.68E+02	1.68E+02	0.00E-01
AR 41	0.00E-01	0.00E-01	0.00E-01	0.00E-01	0.00E-01	0.00E-01	0.00E-01	0.00E-01
KR 83m	0.00E-01	0.00E-01	0.00E-01	0.00E-01	0.00E-01	0.00E-01	0.00E-01	0.00E-01
KR 85m	0.00E-01	0.00E-01	0.00E-01	0.00E-01	0.00E-01	0.00E-01	0.00E-01	0.00E-01
KR 85	0.00E-01	0.00E-01	0.00E-01	0.00E-01	0.00E-01	0.00E-01	0.00E-01	0.00E-01
KR 87	0.00E-01	0.00E-01	0.00E-01	0.00E-01	0.00E-01	0.00E-01	0.00E-01	0.00E-01
KR 88	0.00E-01	0.00E-01	0.00E-01	0.00E-01	0.00E-01	0.00E-01	0.00E-01	0.00E-01
KR 89	0.00E-01	0.00E-01	0.00E-01	0.00E-01	0.00E-01	0.00E-01	0.00E-01	0.00E-01
KR 90	0.00E-01	0.00E-01	0.00E-01	0.00E-01	0.00E-01	0.00E-01	0.00E-01	0.00E-01
XE131m	0.00E-01	0.00E-01	0.00E-01	0.00E-01	0.00E-01	0.00E-01	0.00E-01	0.00E-01
XE133m	0.00E-01	0.00E-01	0.00E-01	0.00E-01	0.00E-01	0.00E-01	0.00E-01	0.00E-01
XE133	0.00E-01	0.00E-01	0.00E-01	0.00E-01	0.00E-01	0.00E-01	0.00E-01	0.00E-01
XE135m	0.00E-01	0.00E-01	0.00E-01	0.00E-01	0.00E-01	0.00E-01	0.00E-01	0.00E-01
XE135	0.00E-01	0.00E-01	0.00E-01	0.00E-01	0.00E-01	0.00E-01	0.00E-01	0.00E-01
XE137	0.00E-01	0.00E-01	0.00E-01	0.00E-01	0.00E-01	0.00E-01	0.00E-01	0.00E-01
XE138	0.00E-01	0.00E-01	0.00E-01	0.00E-01	0.00E-01	0.00E-01	0.00E-01	0.00E-01
CR 51	2.84E+00	1.13E+01	0.00E-01	0.00E-01	4.18E-01	1.83E+00	4.06E+02	0.00E-01
MN 54	1.58E+02	2.24E+02	0.00E-01	8.05E+02	1.58E+02	0.00E-01	3.17E+04	0.00E-01
FE 59	3.00E+02	7.86E+02	4.31E+02	7.45E+02	0.00E-01	0.00E-01	3.23E+04	0.00E-01
CO 58	5.77E+01	3.52E+02	0.00E-01	3.87E+01	0.00E-01	0.00E-01	2.46E+04	0.00E-01
CO 60	3.74E+02	1.01E+03	0.00E-01	2.54E+02	0.00E-01	0.00E-01	1.43E+05	0.00E-01
ZN 65	9.86E+02	1.63E+03	6.12E+02	1.98E+03	1.03E+03	0.00E-01	2.05E+04	0.00E-01
SR 89	3.61E+02	2.03E+03	1.26E+04	0.00E-01	0.00E-01	0.00E-01	6.43E+04	0.00E-01
SR 90	9.89E+03	4.15E+03	4.91E+05	0.00E-01	0.00E-01	0.00E-01	3.55E+05	0.00E-01
ZR 95	6.43E+02	6.88E+02	3.64E+03	8.84E+02	9.86E+02	0.00E-01	5.55E+04	0.00E-01
SB124	3.80E+02	1.87E+03	1.20E+03	1.76E+01	0.00E-01	3.20E+00	8.40E+04	0.00E-01
CS134	2.36E+03	4.21E+01	1.25E+04	2.23E+04	6.02E+03	0.00E-01	2.53E+03	0.00E-01
CS136	1.68E+03	4.53E+01	1.53E+03	4.28E+03	1.79E+03	0.00E-01	3.74E+02	0.00E-01
CS137	1.44E+03	4.21E+01	1.74E+04	1.94E+04	5.45E+03	0.00E-01	2.26E+03	0.00E-01
BA140	9.19E+01	1.22E+03	1.77E+03	1.77E+00	4.25E-01	0.00E-01	5.07E+04	0.00E-01
CE141	6.31E+01	6.85E+02	8.78E+02	5.29E+02	1.66E+02	0.00E-01	1.64E+04	0.00E-01
CE144	5.58E+03	4.69E+03	1.01E+05	3.83E+04	1.70E+04	0.00E-01	3.12E+05	0.00E-01
I 131	6.21E+02	3.36E+01	1.20E+03	1.41E+03	1.64E+03	4.69E+05	0.00E-01	0.00E-01
I 133	1.77E+02	6.85E+01	4.18E+02	6.08E+02	7.10E+02	1.13E+05	0.00E-01	0.00E-01

DOSE TRANSFER FACTORS FOR RADIONUCLIDES IN EFFLUENT AIR
Computed by GASPAR II

AGE = INFANT
PATHWAY = GROUND PLANE

	TOTAL BODY	GI-LLI	BONE	LIVER	KIDNEY	THYROID	LUNG	SKIN
				(mrem m^2)/Ci				
H 3	0.00E-01	0.00E-01	0.00E-01	0.00E-01	0.00E-01	0.00E-01	0.00E-01	0.00E-01
C 14	0.00E-01	0.00E-01	0.00E-01	0.00E-01	0.00E-01	0.00E-01	0.00E-01	0.00E-01
AR 41	0.00E-01	0.00E-01	0.00E-01	0.00E-01	0.00E-01	0.00E-01	0.00E-01	0.00E-01
KR 83m	0.00E-01	0.00E-01	0.00E-01	0.00E-01	0.00E-01	0.00E-01	0.00E-01	0.00E-01
KR 85m	0.00E-01	0.00E-01	0.00E-01	0.00E-01	0.00E-01	0.00E-01	0.00E-01	0.00E-01
KR 85	0.00E-01	0.00E-01	0.00E-01	0.00E-01	0.00E-01	0.00E-01	0.00E-01	0.00E-01
KR 87	0.00E-01	0.00E-01	0.00E-01	0.00E-01	0.00E-01	0.00E-01	0.00E-01	0.00E-01
KR 88	0.00E-01	0.00E-01	0.00E-01	0.00E-01	0.00E-01	0.00E-01	0.00E-01	0.00E-01
KR 89	0.00E-01	0.00E-01	0.00E-01	0.00E-01	0.00E-01	0.00E-01	0.00E-01	0.00E-01
KR 90	0.00E-01	0.00E-01	0.00E-01	0.00E-01	0.00E-01	0.00E-01	0.00E-01	0.00E-01
XE131m	0.00E-01	0.00E-01	0.00E-01	0.00E-01	0.00E-01	0.00E-01	0.00E-01	0.00E-01
XE133m	0.00E-01	0.00E-01	0.00E-01	0.00E-01	0.00E-01	0.00E-01	0.00E-01	0.00E-01
XE133	0.00E-01	0.00E-01	0.00E-01	0.00E-01	0.00E-01	0.00E-01	0.00E-01	0.00E-01
XE135m	0.00E-01	0.00E-01	0.00E-01	0.00E-01	0.00E-01	0.00E-01	0.00E-01	0.00E-01
XE135	0.00E-01	0.00E-01	0.00E-01	0.00E-01	0.00E-01	0.00E-01	0.00E-01	0.00E-01
XE137	0.00E-01	0.00E-01	0.00E-01	0.00E-01	0.00E-01	0.00E-01	0.00E-01	0.00E-01
XE138	0.00E-01	0.00E-01	0.00E-01	0.00E-01	0.00E-01	0.00E-01	0.00E-01	0.00E-01
CR 51	1.47E+05	1.47E+05	1.47E+05	1.47E+05	1.47E+05	1.47E+05	1.47E+05	1.74E+05
MN 54	4.37E+07	4.37E+07	4.37E+07	4.37E+07	4.37E+07	4.37E+07	4.37E+07	5.13E+07
FE 59	8.65E+06	8.65E+06	8.65E+06	8.65E+06	8.65E+06	8.65E+06	8.65E+06	1.01E+07
CO 58	1.20E+07	1.20E+07	1.20E+07	1.20E+07	1.20E+07	1.20E+07	1.20E+07	1.41E+07
CO 60	6.81E+08	6.81E+08	6.81E+08	6.81E+08	6.81E+08	6.81E+08	6.81E+08	8.02E+08
ZN 65	2.36E+07	2.36E+07	2.36E+07	2.36E+07	2.36E+07	2.36E+07	2.36E+07	2.72E+07
SR 89	6.85E+02	6.85E+02	6.85E+02	6.85E+02	6.85E+02	6.85E+02	6.85E+02	7.95E+02
SR 90	0.00E-01	0.00E-01	0.00E-01	0.00E-01	0.00E-01	0.00E-01	0.00E-01	0.00E-01
ZR 95	7.76E+06	7.76E+06	7.76E+06	7.76E+06	7.76E+06	7.76E+06	7.76E+06	9.03E+06
SB124	1.90E+07	1.90E+07	1.90E+07	1.90E+07	1.90E+07	1.90E+07	1.90E+07	2.19E+07
CS134	2.17E+08	2.17E+08	2.17E+08	2.17E+08	2.17E+08	2.17E+08	2.17E+08	2.53E+08
CS136	4.75E+06	4.75E+06	4.75E+06	4.75E+06	4.75E+06	4.75E+06	4.75E+06	5.39E+06
CS137	3.26E+08	3.26E+08	3.26E+08	3.26E+08	3.26E+08	3.26E+08	3.26E+08	3.80E+08
BA140	6.50E+05	6.50E+05	6.50E+05	6.50E+05	6.50E+05	6.50E+05	6.50E+05	7.45E+05
CE141	4.34E+05	4.34E+05	4.34E+05	4.34E+05	4.34E+05	4.34E+05	4.34E+05	4.88E+05
CE144	2.21E+06	2.21E+06	2.21E+06	2.21E+06	2.21E+06	2.21E+06	2.21E+06	2.55E+06
I 131	2.73E+05	2.73E+05	2.73E+05	2.73E+05	2.73E+05	2.73E+05	2.73E+05	3.33E+05
I 133	3.90E+04	3.90E+04	3.90E+04	3.90E+04	3.90E+04	3.90E+04	3.90E+04	4.72E+04

DOSE TRANSFER FACTORS FOR RADIONUCLIDES IN EFFLUENT AIR
Computed by GASPAR II

AGE = INFANT
PATHWAY = COW-MILK

	TOTAL BODY	GI-LLI	BONE	LIVER	KIDNEY	THYROID	LUNG	SKIN
				(mrem m^2)/Ci				
H 3	4.34E+01	4.34E+01	0.00E-01	4.34E+01	4.34E+01	4.34E+01	4.34E+01	4.34E+01
C 14	2.21E+04	2.21E+04	1.03E+05	2.21E+04	2.21E+04	2.21E+04	2.21E+04	2.21E+04
AR 41	0.00E-01	0.00E-01	0.00E-01	0.00E-01	0.00E-01	0.00E-01	0.00E-01	0.00E-01
KR 83m	0.00E-01	0.00E-01	0.00E-01	0.00E-01	0.00E-01	0.00E-01	0.00E-01	0.00E-01
KR 85m	0.00E-01	0.00E-01	0.00E-01	0.00E-01	0.00E-01	0.00E-01	0.00E-01	0.00E-01
KR 85	0.00E-01	0.00E-01	0.00E-01	0.00E-01	0.00E-01	0.00E-01	0.00E-01	0.00E-01
KR 87	0.00E-01	0.00E-01	0.00E-01	0.00E-01	0.00E-01	0.00E-01	0.00E-01	0.00E-01
KR 88	0.00E-01	0.00E-01	0.00E-01	0.00E-01	0.00E-01	0.00E-01	0.00E-01	0.00E-01
KR 89	0.00E-01	0.00E-01	0.00E-01	0.00E-01	0.00E-01	0.00E-01	0.00E-01	0.00E-01
KR 90	0.00E-01	0.00E-01	0.00E-01	0.00E-01	0.00E-01	0.00E-01	0.00E-01	0.00E-01
XE131m	0.00E-01	0.00E-01	0.00E-01	0.00E-01	0.00E-01	0.00E-01	0.00E-01	0.00E-01
XE133m	0.00E-01	0.00E-01	0.00E-01	0.00E-01	0.00E-01	0.00E-01	0.00E-01	0.00E-01
XE133	0.00E-01	0.00E-01	0.00E-01	0.00E-01	0.00E-01	0.00E-01	0.00E-01	0.00E-01
XE135m	0.00E-01	0.00E-01	0.00E-01	0.00E-01	0.00E-01	0.00E-01	0.00E-01	0.00E-01
XE135	0.00E-01	0.00E-01	0.00E-01	0.00E-01	0.00E-01	0.00E-01	0.00E-01	0.00E-01
XE137	0.00E-01	0.00E-01	0.00E-01	0.00E-01	0.00E-01	0.00E-01	0.00E-01	0.00E-01
XE138	0.00E-01	0.00E-01	0.00E-01	0.00E-01	0.00E-01	0.00E-01	0.00E-01	0.00E-01
CR 51	4.56E+03	1.33E+05	0.00E-01	0.00E-01	6.50E+02	2.98E+03	5.80E+03	0.00E-01
MN 54	2.23E+05	3.61E+05	0.00E-01	9.86E+05	2.19E+05	0.00E-01	0.00E-01	0.00E-01
FE 59	4.18E+06	5.10E+06	6.08E+06	1.06E+07	0.00E-01	0.00E-01	3.15E+06	0.00E-01
CO 58	1.60E+06	1.59E+06	0.00E-01	6.40E+05	0.00E-01	0.00E-01	0.00E-01	0.00E-01
CO 60	5.23E+06	5.26E+06	0.00E-01	2.21E+06	0.00E-01	0.00E-01	0.00E-01	0.00E-01
ZN 65	2.50E+08	4.60E+08	1.58E+08	5.42E+08	2.63E+08	0.00E-01	0.00E-01	0.00E-01
SR 89	1.05E+07	7.51E+06	3.64E+08	0.00E-01	0.00E-01	0.00E-01	0.00E-01	0.00E-01
SR 90	4.88E+08	1.97E+08	2.41E+10	0.00E-01	0.00E-01	0.00E-01	0.00E-01	0.00E-01
ZR 95	3.12E+01	2.19E+04	1.80E+02	4.40E+01	4.75E+01	0.00E-01	0.00E-01	0.00E-01
SB124	1.73E+06	1.72E+07	5.58E+06	8.21E+04	0.00E-01	1.48E+04	3.49E+06	0.00E-01
CS134	1.73E+08	4.66E+06	9.19E+08	1.71E+09	4.40E+08	0.00E-01	1.81E+08	0.00E-01
CS136	6.56E+07	2.66E+06	5.96E+07	1.75E+08	7.00E+07	0.00E-01	1.43E+07	0.00E-01
CS137	1.14E+08	5.01E+06	1.37E+09	1.61E+09	4.31E+08	0.00E-01	1.75E+08	0.00E-01
BA140	3.77E+05	1.79E+06	7.29E+06	7.29E+03	1.73E+03	0.00E-01	4.50E+03	0.00E-01
CE141	8.68E+01	3.80E+05	1.21E+03	7.38E+02	2.28E+02	0.00E-01	0.00E-01	0.00E-01
CE144	3.26E+03	3.33E+06	5.83E+04	2.38E+04	9.63E+03	0.00E-01	0.00E-01	0.00E-01
I 131	2.20E+07	1.78E+06	4.25E+07	5.01E+07	5.83E+07	1.64E+10	0.00E-01	0.00E-01
I 133	2.46E+05	1.42E+05	5.77E+05	8.40E+05	9.86E+05	1.52E+08	0.00E-01	0.00E-01

DOSE TRANSFER FACTORS FOR RADIONUCLIDES IN EFFLUENT AIR
Computed by GASPAR II

AGE = INFANT
PATHWAY = GOAT-MILK

	TOTAL BODY	GI-LLI	BONE	LIVER	KIDNEY	THYROID	LUNG	SKIN
				(mrem m^2)/Ci				
H 3	8.87E+01	8.87E+01	0.00E-01	8.87E+01	8.87E+01	8.87E+01	8.87E+01	8.87E+01
C 14	2.21E+04	2.21E+04	1.03E+05	2.21E+04	2.21E+04	2.21E+04	2.21E+04	2.21E+04
AR 41	0.00E-01	0.00E-01	0.00E-01	0.00E-01	0.00E-01	0.00E-01	0.00E-01	0.00E-01
KR 83m	0.00E-01	0.00E-01	0.00E-01	0.00E-01	0.00E-01	0.00E-01	0.00E-01	0.00E-01
KR 85m	0.00E-01	0.00E-01	0.00E-01	0.00E-01	0.00E-01	0.00E-01	0.00E-01	0.00E-01
KR 85	0.00E-01	0.00E-01	0.00E-01	0.00E-01	0.00E-01	0.00E-01	0.00E-01	0.00E-01
KR 87	0.00E-01	0.00E-01	0.00E-01	0.00E-01	0.00E-01	0.00E-01	0.00E-01	0.00E-01
KR 88	0.00E-01	0.00E-01	0.00E-01	0.00E-01	0.00E-01	0.00E-01	0.00E-01	0.00E-01
KR 89	0.00E-01	0.00E-01	0.00E-01	0.00E-01	0.00E-01	0.00E-01	0.00E-01	0.00E-01
KR 90	0.00E-01	0.00E-01	0.00E-01	0.00E-01	0.00E-01	0.00E-01	0.00E-01	0.00E-01
XE131m	0.00E-01	0.00E-01	0.00E-01	0.00E-01	0.00E-01	0.00E-01	0.00E-01	0.00E-01
XE133m	0.00E-01	0.00E-01	0.00E-01	0.00E-01	0.00E-01	0.00E-01	0.00E-01	0.00E-01
XE133	0.00E-01	0.00E-01	0.00E-01	0.00E-01	0.00E-01	0.00E-01	0.00E-01	0.00E-01
XE135m	0.00E-01	0.00E-01	0.00E-01	0.00E-01	0.00E-01	0.00E-01	0.00E-01	0.00E-01
XE135	0.00E-01	0.00E-01	0.00E-01	0.00E-01	0.00E-01	0.00E-01	0.00E-01	0.00E-01
XE137	0.00E-01	0.00E-01	0.00E-01	0.00E-01	0.00E-01	0.00E-01	0.00E-01	0.00E-01
XE138	0.00E-01	0.00E-01	0.00E-01	0.00E-01	0.00E-01	0.00E-01	0.00E-01	0.00E-01
CR 51	5.48E+02	1.60E+04	0.00E-01	0.00E-01	7.80E+01	3.58E+02	6.94E+02	0.00E-01
MN 54	2.68E+04	4.34E+04	0.00E-01	1.19E+05	2.62E+04	0.00E-01	0.00E-01	0.00E-01
FE 59	5.45E+05	6.62E+05	7.92E+05	1.38E+06	0.00E-01	0.00E-01	4.09E+05	0.00E-01
CO 58	1.91E+05	1.91E+05	0.00E-01	7.67E+04	0.00E-01	0.00E-01	0.00E-01	0.00E-01
CO 60	6.27E+05	6.31E+05	0.00E-01	2.66E+05	0.00E-01	0.00E-01	0.00E-01	0.00E-01
ZN 65	3.00E+07	5.51E+07	1.90E+07	6.53E+07	3.16E+07	0.00E-01	0.00E-01	0.00E-01
SR 89	2.20E+07	1.58E+07	7.67E+08	0.00E-01	0.00E-01	0.00E-01	0.00E-01	0.00E-01
SR 90	1.03E+09	4.15E+08	5.07E+10	0.00E-01	0.00E-01	0.00E-01	0.00E-01	0.00E-01
ZR 95	3.74E+00	2.63E+03	2.16E+01	5.29E+00	5.67E+00	0.00E-01	0.00E-01	0.00E-01
SB124	2.08E+05	2.07E+06	6.69E+05	9.86E+03	0.00E-01	1.78E+03	4.18E+05	0.00E-01
CS134	5.20E+08	1.40E+07	2.76E+09	5.13E+09	1.32E+09	0.00E-01	5.42E+08	0.00E-01
CS136	1.96E+08	7.99E+06	1.79E+08	5.26E+08	2.10E+08	0.00E-01	4.28E+07	0.00E-01
CS137	3.42E+08	1.51E+07	4.12E+09	4.82E+09	1.29E+09	0.00E-01	5.23E+08	0.00E-01
BA140	4.50E+04	2.15E+05	8.78E+05	8.78E+02	2.08E+02	0.00E-01	5.39E+02	0.00E-01
CE141	1.04E+01	4.56E+04	1.45E+02	8.87E+01	2.73E+01	0.00E-01	0.00E-01	0.00E-01
CE144	3.93E+02	4.02E+05	7.00E+03	2.86E+03	1.16E+03	0.00E-01	0.00E-01	0.00E-01
I 131	2.63E+07	2.14E+06	5.07E+07	5.99E+07	7.00E+07	1.97E+10	0.00E-01	0.00E-01
I 133	2.95E+05	1.70E+05	6.91E+05	1.01E+06	1.18E+06	1.83E+08	0.00E-01	0.00E-01

DOSE TRANSFER FACTORS FOR RADIONUCLIDES IN EFFLUENT AIR
Computed by GASPAR II

AGE = INFANT
PATHWAY = ANIMAL-MEAT

	TOTAL BODY	GI-LLI	BONE	LIVER	KIDNEY	THYROID	LUNG	SKIN
				(mrem m^2)/Ci				
H 3	0.00E-01	0.00E-01	0.00E-01	0.00E-01	0.00E-01	0.00E-01	0.00E-01	0.00E-01
C 14	0.00E-01	0.00E-01	0.00E-01	0.00E-01	0.00E-01	0.00E-01	0.00E-01	0.00E-01
AR 41	0.00E-01	0.00E-01	0.00E-01	0.00E-01	0.00E-01	0.00E-01	0.00E-01	0.00E-01
KR 83m	0.00E-01	0.00E-01	0.00E-01	0.00E-01	0.00E-01	0.00E-01	0.00E-01	0.00E-01
KR 85m	0.00E-01	0.00E-01	0.00E-01	0.00E-01	0.00E-01	0.00E-01	0.00E-01	0.00E-01
KR 85	0.00E-01	0.00E-01	0.00E-01	0.00E-01	0.00E-01	0.00E-01	0.00E-01	0.00E-01
KR 87	0.00E-01	0.00E-01	0.00E-01	0.00E-01	0.00E-01	0.00E-01	0.00E-01	0.00E-01
KR 88	0.00E-01	0.00E-01	0.00E-01	0.00E-01	0.00E-01	0.00E-01	0.00E-01	0.00E-01
KR 89	0.00E-01	0.00E-01	0.00E-01	0.00E-01	0.00E-01	0.00E-01	0.00E-01	0.00E-01
KR 90	0.00E-01	0.00E-01	0.00E-01	0.00E-01	0.00E-01	0.00E-01	0.00E-01	0.00E-01
XE131m	0.00E-01	0.00E-01	0.00E-01	0.00E-01	0.00E-01	0.00E-01	0.00E-01	0.00E-01
XE133m	0.00E-01	0.00E-01	0.00E-01	0.00E-01	0.00E-01	0.00E-01	0.00E-01	0.00E-01
XE133	0.00E-01	0.00E-01	0.00E-01	0.00E-01	0.00E-01	0.00E-01	0.00E-01	0.00E-01
XE135m	0.00E-01	0.00E-01	0.00E-01	0.00E-01	0.00E-01	0.00E-01	0.00E-01	0.00E-01
XE135	0.00E-01	0.00E-01	0.00E-01	0.00E-01	0.00E-01	0.00E-01	0.00E-01	0.00E-01
XE137	0.00E-01	0.00E-01	0.00E-01	0.00E-01	0.00E-01	0.00E-01	0.00E-01	0.00E-01
XE138	0.00E-01	0.00E-01	0.00E-01	0.00E-01	0.00E-01	0.00E-01	0.00E-01	0.00E-01
CR 51	0.00E-01	0.00E-01	0.00E-01	0.00E-01	0.00E-01	0.00E-01	0.00E-01	0.00E-01
MN 54	0.00E-01	0.00E-01	0.00E-01	0.00E-01	0.00E-01	0.00E-01	0.00E-01	0.00E-01
FE 59	0.00E-01	0.00E-01	0.00E-01	0.00E-01	0.00E-01	0.00E-01	0.00E-01	0.00E-01
CO 58	0.00E-01	0.00E-01	0.00E-01	0.00E-01	0.00E-01	0.00E-01	0.00E-01	0.00E-01
CO 60	0.00E-01	0.00E-01	0.00E-01	0.00E-01	0.00E-01	0.00E-01	0.00E-01	0.00E-01
ZN 65	0.00E-01	0.00E-01	0.00E-01	0.00E-01	0.00E-01	0.00E-01	0.00E-01	0.00E-01
SR 89	0.00E-01	0.00E-01	0.00E-01	0.00E-01	0.00E-01	0.00E-01	0.00E-01	0.00E-01
SR 90	0.00E-01	0.00E-01	0.00E-01	0.00E-01	0.00E-01	0.00E-01	0.00E-01	0.00E-01
ZR 95	0.00E-01	0.00E-01	0.00E-01	0.00E-01	0.00E-01	0.00E-01	0.00E-01	0.00E-01
SB124	0.00E-01	0.00E-01	0.00E-01	0.00E-01	0.00E-01	0.00E-01	0.00E-01	0.00E-01
CS134	0.00E-01	0.00E-01	0.00E-01	0.00E-01	0.00E-01	0.00E-01	0.00E-01	0.00E-01
CS136	0.00E-01	0.00E-01	0.00E-01	0.00E-01	0.00E-01	0.00E-01	0.00E-01	0.00E-01
CS137	0.00E-01	0.00E-01	0.00E-01	0.00E-01	0.00E-01	0.00E-01	0.00E-01	0.00E-01
BA140	0.00E-01	0.00E-01	0.00E-01	0.00E-01	0.00E-01	0.00E-01	0.00E-01	0.00E-01
CE141	0.00E-01	0.00E-01	0.00E-01	0.00E-01	0.00E-01	0.00E-01	0.00E-01	0.00E-01
CE144	0.00E-01	0.00E-01	0.00E-01	0.00E-01	0.00E-01	0.00E-01	0.00E-01	0.00E-01
I 131	0.00E-01	0.00E-01	0.00E-01	0.00E-01	0.00E-01	0.00E-01	0.00E-01	0.00E-01
I 133	0.00E-01	0.00E-01	0.00E-01	0.00E-01	0.00E-01	0.00E-01	0.00E-01	0.00E-01

DOSE TRANSFER FACTORS FOR RADIONUCLIDES IN EFFLUENT AIR
Computed by GASPAR II

AGE = INFANT
PATHWAY = VEGETABLES

	TOTAL BODY	GI-LLI	BONE	LIVER	KIDNEY	THYROID	LUNG	SKIN
				(mrem m^2)/Ci				
H 3	0.00E-01	0.00E-01	0.00E-01	0.00E-01	0.00E-01	0.00E-01	0.00E-01	0.00E-01
C 14	0.00E-01	0.00E-01	0.00E-01	0.00E-01	0.00E-01	0.00E-01	0.00E-01	0.00E-01
AR 41	0.00E-01	0.00E-01	0.00E-01	0.00E-01	0.00E-01	0.00E-01	0.00E-01	0.00E-01
KR 83m	0.00E-01	0.00E-01	0.00E-01	0.00E-01	0.00E-01	0.00E-01	0.00E-01	0.00E-01
KR 85m	0.00E-01	0.00E-01	0.00E-01	0.00E-01	0.00E-01	0.00E-01	0.00E-01	0.00E-01
KR 85	0.00E-01	0.00E-01	0.00E-01	0.00E-01	0.00E-01	0.00E-01	0.00E-01	0.00E-01
KR 87	0.00E-01	0.00E-01	0.00E-01	0.00E-01	0.00E-01	0.00E-01	0.00E-01	0.00E-01
KR 88	0.00E-01	0.00E-01	0.00E-01	0.00E-01	0.00E-01	0.00E-01	0.00E-01	0.00E-01
KR 89	0.00E-01	0.00E-01	0.00E-01	0.00E-01	0.00E-01	0.00E-01	0.00E-01	0.00E-01
KR 90	0.00E-01	0.00E-01	0.00E-01	0.00E-01	0.00E-01	0.00E-01	0.00E-01	0.00E-01
XE131m	0.00E-01	0.00E-01	0.00E-01	0.00E-01	0.00E-01	0.00E-01	0.00E-01	0.00E-01
XE133m	0.00E-01	0.00E-01	0.00E-01	0.00E-01	0.00E-01	0.00E-01	0.00E-01	0.00E-01
XE133	0.00E-01	0.00E-01	0.00E-01	0.00E-01	0.00E-01	0.00E-01	0.00E-01	0.00E-01
XE135m	0.00E-01	0.00E-01	0.00E-01	0.00E-01	0.00E-01	0.00E-01	0.00E-01	0.00E-01
XE135	0.00E-01	0.00E-01	0.00E-01	0.00E-01	0.00E-01	0.00E-01	0.00E-01	0.00E-01
XE137	0.00E-01	0.00E-01	0.00E-01	0.00E-01	0.00E-01	0.00E-01	0.00E-01	0.00E-01
XE138	0.00E-01	0.00E-01	0.00E-01	0.00E-01	0.00E-01	0.00E-01	0.00E-01	0.00E-01
CR 51	0.00E-01	0.00E-01	0.00E-01	0.00E-01	0.00E-01	0.00E-01	0.00E-01	0.00E-01
MN 54	0.00E-01	0.00E-01	0.00E-01	0.00E-01	0.00E-01	0.00E-01	0.00E-01	0.00E-01
FE 59	0.00E-01	0.00E-01	0.00E-01	0.00E-01	0.00E-01	0.00E-01	0.00E-01	0.00E-01
CO 58	0.00E-01	0.00E-01	0.00E-01	0.00E-01	0.00E-01	0.00E-01	0.00E-01	0.00E-01
CO 60	0.00E-01	0.00E-01	0.00E-01	0.00E-01	0.00E-01	0.00E-01	0.00E-01	0.00E-01
ZN 65	0.00E-01	0.00E-01	0.00E-01	0.00E-01	0.00E-01	0.00E-01	0.00E-01	0.00E-01
SR 89	0.00E-01	0.00E-01	0.00E-01	0.00E-01	0.00E-01	0.00E-01	0.00E-01	0.00E-01
SR 90	0.00E-01	0.00E-01	0.00E-01	0.00E-01	0.00E-01	0.00E-01	0.00E-01	0.00E-01
ZR 95	0.00E-01	0.00E-01	0.00E-01	0.00E-01	0.00E-01	0.00E-01	0.00E-01	0.00E-01
SB124	0.00E-01	0.00E-01	0.00E-01	0.00E-01	0.00E-01	0.00E-01	0.00E-01	0.00E-01
CS134	0.00E-01	0.00E-01	0.00E-01	0.00E-01	0.00E-01	0.00E-01	0.00E-01	0.00E-01
CS136	0.00E-01	0.00E-01	0.00E-01	0.00E-01	0.00E-01	0.00E-01	0.00E-01	0.00E-01
CS137	0.00E-01	0.00E-01	0.00E-01	0.00E-01	0.00E-01	0.00E-01	0.00E-01	0.00E-01
BA140	0.00E-01	0.00E-01	0.00E-01	0.00E-01	0.00E-01	0.00E-01	0.00E-01	0.00E-01
CE141	0.00E-01	0.00E-01	0.00E-01	0.00E-01	0.00E-01	0.00E-01	0.00E-01	0.00E-01
CE144	0.00E-01	0.00E-01	0.00E-01	0.00E-01	0.00E-01	0.00E-01	0.00E-01	0.00E-01
I 131	0.00E-01	0.00E-01	0.00E-01	0.00E-01	0.00E-01	0.00E-01	0.00E-01	0.00E-01
I 133	0.00E-01	0.00E-01	0.00E-01	0.00E-01	0.00E-01	0.00E-01	0.00E-01	0.00E-01

DOSE TRANSFER FACTORS FOR RADIONUCLIDES IN EFFLUENT AIR
Computed by GASPAR II

AGE = INFANT
PATHWAY = PLUME

	TOTAL BODY	GI-LLI	BONE	LIVER	KIDNEY	THYROID	LUNG	SKIN
				(mrem m^3)/(Ci sec)				
H 3	0.00E-01	0.00E-01	0.00E-01	0.00E-01	0.00E-01	0.00E-01	0.00E-01	0.00E-01
C 14	0.00E-01	0.00E-01	0.00E-01	0.00E-01	0.00E-01	0.00E-01	0.00E-01	0.00E-01
AR 41	1.96E+02	1.96E+02	1.96E+02	1.96E+02	1.96E+02	1.96E+02	1.96E+02	3.14E+02
KR 83m	1.68E-03	1.68E-03	1.68E-03	1.68E-03	1.68E-03	1.68E-03	9.38E-02	4.75E-01
KR 85m	2.60E+01	2.60E+01	2.60E+01	2.60E+01	2.60E+01	2.60E+01	2.66E+01	7.67E+01
KR 85	3.58E-01	3.58E-01	3.58E-01	3.58E-01	3.58E-01	3.58E-01	9.51E-01	4.28E+01
KR 87	1.32E+02	1.32E+02	1.32E+02	1.32E+02	1.32E+02	1.32E+02	1.35E+02	4.60E+02
KR 88	3.26E+02	3.26E+02	3.26E+02	3.26E+02	3.26E+02	3.26E+02	3.26E+02	4.50E+02
KR 89	3.68E+02	3.68E+02	3.68E+02	3.68E+02	3.68E+02	3.68E+02	3.71E+02	7.48E+02
KR 90	3.46E+02	3.46E+02	3.46E+02	3.46E+02	3.46E+02	3.46E+02	3.49E+02	6.33E+02
XE131m	2.03E+00	2.03E+00	2.03E+00	2.03E+00	2.03E+00	2.03E+00	2.38E+00	1.89E+01
XE133m	5.58E+00	5.58E+00	5.58E+00	5.58E+00	5.58E+00	5.58E+00	6.02E+00	3.96E+01
XE133	6.53E+00	6.53E+00	6.53E+00	6.53E+00	6.53E+00	6.53E+00	6.85E+00	1.84E+01
XE135m	6.91E+01	6.91E+01	6.91E+01	6.91E+01	6.91E+01	6.91E+01	6.94E+01	1.05E+02
XE135	4.02E+01	4.02E+01	4.02E+01	4.02E+01	4.02E+01	4.02E+01	4.09E+01	1.06E+02
XE137	3.15E+01	3.15E+01	3.15E+01	3.15E+01	3.15E+01	3.15E+01	3.55E+01	4.25E+02
XE138	1.96E+02	1.96E+02	1.96E+02	1.96E+02	1.96E+02	1.96E+02	1.97E+02	3.58E+02
CR 51	0.00E-01	0.00E-01	0.00E-01	0.00E-01	0.00E-01	0.00E-01	0.00E-01	0.00E-01
MN 54	0.00E-01	0.00E-01	0.00E-01	0.00E-01	0.00E-01	0.00E-01	0.00E-01	0.00E-01
FE 59	0.00E-01	0.00E-01	0.00E-01	0.00E-01	0.00E-01	0.00E-01	0.00E-01	0.00E-01
CO 58	0.00E-01	0.00E-01	0.00E-01	0.00E-01	0.00E-01	0.00E-01	0.00E-01	0.00E-01
CO 60	0.00E-01	0.00E-01	0.00E-01	0.00E-01	0.00E-01	0.00E-01	0.00E-01	0.00E-01
ZN 65	0.00E-01	0.00E-01	0.00E-01	0.00E-01	0.00E-01	0.00E-01	0.00E-01	0.00E-01
SR 89	0.00E-01	0.00E-01	0.00E-01	0.00E-01	0.00E-01	0.00E-01	0.00E-01	0.00E-01
SR 90	0.00E-01	0.00E-01	0.00E-01	0.00E-01	0.00E-01	0.00E-01	0.00E-01	0.00E-01
ZR 95	0.00E-01	0.00E-01	0.00E-01	0.00E-01	0.00E-01	0.00E-01	0.00E-01	0.00E-01
SB124	0.00E-01	0.00E-01	0.00E-01	0.00E-01	0.00E-01	0.00E-01	0.00E-01	0.00E-01
CS134	0.00E-01	0.00E-01	0.00E-01	0.00E-01	0.00E-01	0.00E-01	0.00E-01	0.00E-01
CS136	0.00E-01	0.00E-01	0.00E-01	0.00E-01	0.00E-01	0.00E-01	0.00E-01	0.00E-01
CS137	0.00E-01	0.00E-01	0.00E-01	0.00E-01	0.00E-01	0.00E-01	0.00E-01	0.00E-01
BA140	0.00E-01	0.00E-01	0.00E-01	0.00E-01	0.00E-01	0.00E-01	0.00E-01	0.00E-01
CE141	0.00E-01	0.00E-01	0.00E-01	0.00E-01	0.00E-01	0.00E-01	0.00E-01	0.00E-01
CE144	0.00E-01	0.00E-01	0.00E-01	0.00E-01	0.00E-01	0.00E-01	0.00E-01	0.00E-01
I 131	0.00E-01	0.00E-01	0.00E-01	0.00E-01	0.00E-01	0.00E-01	0.00E-01	0.00E-01
I 133	0.00E-01	0.00E-01	0.00E-01	0.00E-01	0.00E-01	0.00E-01	0.00E-01	0.00E-01

APPENDIX B: TECHNICAL BASES FOR EFFECTIVE DOSE FACTORS

Overview

The evaluation of doses due to releases of radioactive material to the atmosphere can be simplified by the use of effective dose transfer factors instead of using dose factors which are radionuclide specific. These effective factors, which are based on the total radioactivity released to approximate the dose in the environment, i.e., instead of having to sum the isotopic distribution multiplied by the isotope specific dose factor only a single multiplication times the total quantity of radioactive material released would be needed. This approach provides a reasonable estimate of the actual dose while eliminating the need for a detailed calculational technique.

Determination of Effective Dose Factors

The effective dose transfer factors are based on past operating data. The radioactive effluent distribution for the past years can be used to derive single effective factors by the following equations:

$$A\gamma_{s\,eff} = \sum_i A\gamma_i \, x \, f_i$$

where

$A\gamma_{s\,eff}$ = the effective gamma-air dose factor due to stack releases of noble gases (mrad/µCi)

$A\gamma_i$ = the gamma-air dose factor due to stack releases of each noble gas radionuclide i (mrad/µCi)

f_i = the fraction of noble gas radioactivity constituted by radionuclide i

$$A\gamma_{v\,eff} = \sum_i A\gamma_{vi} \, x \, f_i$$

where

$A\gamma_{v\,eff}$ = the effective gamma-air dose factor due to vent releases of all noble gases $\left(\frac{mrad}{\mu Ci \text{ sec}/m^3}\right)$

$A\gamma_{vi}$ = the gamma-air dose factor due to vent releases of each noble gas radionuclide i $\left(\frac{mrad}{\mu Ci\ \sec/m^3}\right)$

$$A\beta_{v_{eff}} = \sum_i A\beta_i \ x\ f_i$$

where

$A\beta_{eff}$ = the effective beta-air dose factor due to either vent or stack releases of all noble gases $\left(\frac{mrad}{\mu Ci\ \sec/m^3}\right)$

$A\beta_i$ = the beta air dose factor due to either vent or stack releases of each noble gas radionuclide i $\left(\frac{mrad}{\mu Ci\ \sec/m^3}\right)$

To determine the appropriate effective factors to be used and to evaluate the degree of variability, the atmospheric radioactive effluents for the past 3 years have been evaluated.

Table B-1 presents the radionuclide distribution for stack and vent releases as measured by isotopic analysis of periodic grab samples from the respective effluent release points. Table B-2 presents the effective dose factors (gamma-air and beta-air) derived on the basis of the radionuclide distribution.

Except for the year 1981, the variability of the effective factors is minor. For 1981, Xe-138 contributes significantly to the derivation of the effective factors for stack releases. The Xe-138 contribution for the years 1979 and 1980 is not so significant. This increase in Xe-138 from 1981 results in a larger variability of the yearly values from the average than what is considered typical. Therefore, in order to assure adequate conservatism, the effective dose factors for stack releases will be based on the radionuclide distribution for the year 1981. Because this is considered an atypical distribution resulting in higher doses, use of the data will provide dose estimates which are conservative. As more data become available to further establish a typical radionuclide distribution, the effective dose factors for stack releases may be reevaluated.

To provide an additional degree of conservatism, a factor of 0.8 is introduced into the dose calculational process when the effective dose transfer factor is used. This added conservatism provides additional assurance that the evaluation of doses by the use of a single effective factor will not significantly underestimate any actual doses in the environment.

By evaluating doses using these effective dose factors, maximum allowable releases of noble gases for any calendar quarter may be determined. As discussed in Section 3.6.1, the maximum allowable releases based on the gamma-air effective dose factor have been determined to be 250,000 Ci/quarter for stack releases and 12,700 Ci/quarter for vent releases.

For the beta air effective dose factors, the releases of noble gases corresponding to the quarterly limit of 10 mrads corresponds to 307,000 Ci/quarter for stack releases and 29,600 Ci/quarter for vent releases. Comparing these values for allowable releases with the values based on the gamma-air effective dose factors, it is demonstrated that the gamma-air doses are more restrictive than the beta-air doses. In other words, the doses calculated by using the gamma-air effective dose factors represent a larger fraction of the allowable dose than does the dose calculated by using the beta-air effective dose factors. Therefore, when using the effective dose factors for evaluating compliance with the quarterly dose limits of Section 6.2.3, only the gamma-air dose need be evaluated; compliance with the gamma-air dose limit represents a de facto compliance with the beta-air dose limit.

Reevaluation

The doses due to the gaseous effluents are evaluated by the more detailed calculational methods (i.e., use of nuclide specific dose factors) on a yearly basis. At that time, a comparison can be made between the simplified method and the detailed method to assure the overall reasonableness of this limited analysis approach. If the comparison indicates that the radionuclide distribution has changed significantly, thereby causing the simplified method to underestimate the doses, the value of the effective factors will need to be reexamined to assure the overall acceptability of this approach. However, this reexamination will only be needed if the doses as calculated by the detailed analysis exceed 50% of the design bases doses (i.e., greater than 50% of the 10 mrad gamma air dose or 20 mrad beta air dose).

Table B-1

RADIONUCLIDE DISTRIBUTION OF STACK AND VENT RELEASES

Radionuclide	Fraction of Total Releases					
	Stack			Vent		
	1979	1980	1981	1979	1980	1981
Kr-85m	.11	.05	.09	.02	---	---
Kr-87	.01	---	.02	---	.01	---
Kr-88	.07	.04	.08	---	---	---
Xe-133	.76	.82	.45	.24	.24	.14
Xe-135	.01	.02	.03	.72	.50	.59
Xe-135m	---	.02	.08	.02	.22	.21
Xe-138	.02	.06	.25	---	.03	.05

Table B-2

EFFECTIVE DOSE FACTORS NOBLE GASES - AIR DOSES

Year	Stack Releases		Vent Releases	
	Gamma-Air Effective Dose Factor $A\gamma_{seff}$ $\left(\frac{mrad}{\mu Ci}\right)$	Beta-Air Effective Dose Factor $A\beta_{seff}$ $\left(\frac{mrad}{\mu Ci\ sec/m^3}\right)$	Gamma-Air Effective Dose Factor $A\gamma_{veff}$ $\left(\frac{mrad}{\mu Ci\ sec/m^3}\right)$	Beta-Air Effective Dose Factor $A\beta_{veff}$ $\left(\frac{mrad}{\mu Ci\ sec/m^3}\right)$
1979	7.0×10^{-12}	5.9×10^{-5}	5.0×10^{-5}	6.5×10^{-5}
1980	6.7×10^{-12}	5.3×10^{-5}	6.7×10^{-5}	6.0×10^{-5}
1981	1.6×10^{-11}	9.3×10^{-12}	6.4×10^{-5}	6.3×10^{-5}
Average	9.9×10^{-12}	6.8×10^{-5}	6.4×10^{-5}	6.3×10^{-5}

APPENDIX C: DOSE TRANSFER FACTORS FOR WATERBORNE PATHWAYS

Dose transfer factors for waterborne effluent have been derived by solving environmental pathway models on the bases of unit radionuclide release in effluent (1 Ci/yr) discharged in 1 gallon/minute of water. The dose transfer factors in this appendix were computed with the LADTAP II computer program, using default values of parameters applicable to the most exposed members of the public as recommended in Regulatory 1.109, revision 1, with the following exceptions:

- In order to account for significant revisions of data since publication of the Regulatory Guide, data differing from those in Regulatory Guide 1.109, revision 1 are identified in LADTAP II documentation.[1]
- After publishing Reg. Guide 1.109, the NRC recommended that soil-to-plant bioaccumulation factors, B_{iv}, of cesium and strontium be changed.[2]
- The revised values were used to derive dose transfer factors tabulated for Sr89, Sr90, and Cs137 in irrigated vegetation.
- Values of environmental transit time recommended in Reg. Guide 1.109[3], namely 1440 hr from harvest of stored vegetables to ingestion, were retained.

Dose transfer factors are included hereafter for the following parameters. Only those pathways applicable at the time of a radioactive liquid effluent release will be used for dose calculations. Likely pathways would include potable water, freshwater fish and irrigated fresh leafy vegetables (including strawberries).

Pathway	Age Group	Organ
Potable water	Adult	Total Body
Freshwater fish	Teenager	GI tract
Freshwater invertebrates	Child	Bone
Irrigated fresh leafy vegetables	Infant	Liver
Irrigated stored vegetables, fruit, and grain		Kidney
Irrigated grass-cow-milk		Thyroid
Irrigated grass-cow-meat		Lung
Irrigated stored forage-cow-milk		Skin
Irrigated stored forage-cow-meat		
Animal drinks river water-milk		
Animal drinks river water-meat		
River shoreline deposits-irradiation		
Swimming		
Boating		

[1] Strenge, D.L., et. al., LADTAP II - Technical Reference and User guide, NUREG/CR-4013, April 1986.

[2] NRC, SECY-79-653A, January 30, 1980.

[3] Regulatory Guide 1.109, rev. 1, Table E-15.

DOSE TRANSFER FACTORS FOR RADIONUCLIDES IN EFFLUENT WATER

AGE = ADULT
PATHWAY = POTABLE WATER

	TOTAL BODY	GI-LLI	BONE	LIVER	KIDNEY	THYROID	LUNG	SKIN
				(mrem gal)/(Ci min)				
H 3	2.19E+01	2.19E+01	0.00E-01	2.19E+01	2.19E+01	2.19E+01	2.19E+01	0.00E-01
C 14	2.08E+02	2.08E+02	1.04E+03	2.08E+02	2.08E+02	2.08E+02	2.08E+02	0.00E-01
NA 24	2.06E+02	2.06E+02	2.06E+02	2.06E+02	2.06E+02	2.06E+02	2.06E+02	0.00E-01
P 32	2.60E+03	7.57E+03	6.73E+04	4.19E+03	0.00E-01	0.00E-01	0.00E-01	0.00E-01
CR 51	9.50E-01	2.39E+02	0.00E-01	0.00E-01	2.09E-01	5.68E-01	1.26E+00	0.00E-01
MN 54	3.19E+02	5.12E+03	0.00E-01	1.67E+03	4.97E+02	0.00E-01	0.00E-01	0.00E-01
MN 56	1.15E-02	2.06E+00	0.00E-01	6.46E-02	8.20E-02	0.00E-01	0.00E-01	0.00E-01
FE 55	1.62E+02	3.99E+02	1.01E+03	6.95E+02	0.00E-01	0.00E-01	3.88E+02	0.00E-01
FE 59	1.41E+03	1.23E+04	1.56E+03	3.68E+03	0.00E-01	0.00E-01	1.03E+03	0.00E-01
CO 58	6.06E+02	5.48E+03	0.00E-01	2.70E+02	0.00E-01	0.00E-01	0.00E-01	0.00E-01
CO 60	1.73E+03	1.47E+04	0.00E-01	7.84E+02	0.00E-01	0.00E-01	0.00E-01	0.00E-01
NI 63	1.60E+03	6.89E+02	4.76E+04	3.30E+03	0.00E-01	0.00E-01	0.00E-01	0.00E-01
NI 65	1.56E-02	8.66E-01	2.63E-01	3.42E-02	0.00E-01	0.00E-01	0.00E-01	0.00E-01
CU 64	3.85E+00	6.99E+02	0.00E-01	8.21E+00	2.07E+01	0.00E-01	0.00E-01	0.00E-01
ZN 65	2.54E+03	3.54E+03	1.77E+03	5.62E+03	3.76E+03	0.00E-01	0.00E-01	0.00E-01
ZN 69	1.21E-08	2.62E-08	9.11E-08	1.74E-07	1.13E-07	0.00E-01	0.00E-01	0.00E-01
BR 83	1.40E-02	2.02E-02	0.00E-01	0.00E-01	0.00E-01	0.00E-01	0.00E-01	0.00E-01
BR 84	0.00E-01	0.00E-01	0.00E-01	0.00E-01	0.00E-01	0.00E-01	0.00E-01	0.00E-01
BR 85	0.00E-01	0.00E-01	0.00E-01	0.00E-01	0.00E-01	0.00E-01	0.00E-01	0.00E-01
RB 86	3.47E+03	1.47E+03	0.00E-01	7.45E+03	0.00E-01	0.00E-01	0.00E-01	0.00E-01
RB 88	0.00E-01	0.00E-01	0.00E-01	0.00E-01	0.00E-01	0.00E-01	0.00E-01	0.00E-01
RB 89	0.00E-01	0.00E-01	0.00E-01	0.00E-01	0.00E-01	0.00E-01	0.00E-01	0.00E-01
SR 89	3.19E+03	1.78E+04	1.11E+05	0.00E-01	0.00E-01	0.00E-01	0.00E-01	0.00E-01
SR 90	6.41E+04	8.02E+04	3.19E+06	0.00E-01	0.00E-01	0.00E-01	0.00E-01	0.00E-01
SR 91	1.45E+01	1.71E+03	3.59E+02	0.00E-01	0.00E-01	0.00E-01	0.00E-01	0.00E-01
SR 92	7.38E-02	3.38E+01	1.71E+00	0.00E-01	0.00E-01	0.00E-01	0.00E-01	0.00E-01
Y 90	7.29E-02	2.88E+04	2.72E+00	0.00E-01	0.00E-01	0.00E-01	0.00E-01	0.00E-01
Y 91M	0.00E-01	0.00E-01	0.00E-01	0.00E-01	0.00E-01	0.00E-01	0.00E-01	0.00E-01
Y 91	1.37E+00	2.81E+04	5.10E+01	0.00E-01	0.00E-01	0.00E-01	0.00E-01	0.00E-01
Y 92	8.37E-05	5.02E+01	2.86E-03	0.00E-01	0.00E-01	0.00E-01	0.00E-01	0.00E-01
Y 93	5.20E-03	5.98E+03	1.89E-01	0.00E-01	0.00E-01	0.00E-01	0.00E-01	0.00E-01
ZR 95	2.39E+00	1.12E+04	1.10E+01	3.53E+00	5.54E+00	0.00E-01	0.00E-01	0.00E-01
ZR 97	2.12E-02	1.44E+04	2.30E-01	4.64E-02	7.00E-02	0.00E-01	0.00E-01	0.00E-01
NB 95	6.68E-01	7.54E+03	2.23E+00	1.24E+00	1.23E+00	0.00E-01	0.00E-01	0.00E-01
MO 99	2.33E+02	2.84E+03	0.00E-01	1.23E+03	2.78E+03	0.00E-01	0.00E-01	0.00E-01
TC 99M	2.05E-01	9.53E+00	5.70E-03	1.61E-02	2.45E-01	0.00E-01	7.89E-03	0.00E-01
TC101	0.00E-01	0.00E-01	0.00E-01	0.00E-01	0.00E-01	0.00E-01	0.00E-01	0.00E-01

DOSE TRANSFER FACTORS FOR RADIONUCLIDES IN EFFLUENT WATER

AGE = ADULT
PATHWAY = POTABLE WATER

	TOTAL BODY	GI-LLI	BONE	LIVER	KIDNEY	THYROID	LUNG	SKIN
				(mrem gal)/(Ci min)				
RU103	2.87E+01	7.77E+03	6.66E+01	0.00E-01	2.54E+02	0.00E-01	0.00E-01	0.00E-01
RU105	5.24E-02	8.12E+01	1.33E-01	0.00E-01	1.72E+00	0.00E-01	0.00E-01	0.00E-01
RU106	1.27E+02	6.51E+04	1.00E+03	0.00E-01	1.94E+03	0.00E-01	0.00E-01	0.00E-01
AG110M	3.21E+01	2.21E+04	5.85E+01	5.41E+01	1.06E+02	0.00E-01	0.00E-01	0.00E-01
TE125M	1.30E+02	3.87E+03	9.70E+02	3.51E+02	3.94E+03	2.92E+02	0.00E-01	0.00E-01
TE127M	3.00E+02	8.26E+03	2.46E+03	8.81E+02	1.00E+04	6.30E+02	0.00E-01	0.00E-01
TE127	1.47E+00	5.36E+02	6.80E+00	2.44E+00	2.77E+01	5.03E+00	0.00E-01	0.00E-01
TE129M	6.53E+02	2.08E+04	4.13E+03	1.54E+03	1.72E+04	1.42E+03	0.00E-01	0.00E-01
TE129	1.66E-06	5.13E-06	6.79E-06	2.55E-06	2.85E-05	5.21E-06	0.00E-01	0.00E-01
TE131M	1.48E+02	1.77E+04	3.64E+02	1.78E+02	1.80E+03	2.82E+02	0.00E-01	0.00E-01
TE131	0.00E-01	0.00E-01	0.00E-01	0.00E-01	0.00E-01	0.00E-01	0.00E-01	0.00E-01
TE132	4.53E+02	2.28E+04	7.46E+02	4.83E+02	4.65E+03	5.33E+02	0.00E-01	0.00E-01
I 130	8.37E+01	1.83E+02	7.19E+01	2.12E+02	3.31E+02	1.80E+04	0.00E-01	0.00E-01
I 131	1.15E+03	5.28E+02	1.40E+03	2.00E+03	3.43E+03	6.55E+05	0.00E-01	0.00E-01
I 132	5.03E-02	2.70E-02	5.38E-02	1.44E-01	2.29E-01	5.03E+00	0.00E-01	0.00E-01
I 133	1.24E+02	3.66E+02	2.34E+02	4.07E+02	7.10E+02	5.98E+04	0.00E-01	0.00E-01
I 134	2.10E-07	5.11E-10	2.16E-07	5.86E-07	9.32E-07	1.02E-05	0.00E-01	0.00E-01
I 135	1.26E+01	3.85E+01	1.30E+01	3.41E+01	5.47E+01	2.25E+03	0.00E-01	0.00E-01
CS134	4.43E+04	9.48E+02	2.28E+04	5.42E+04	1.75E+04	0.00E-01	5.82E+03	0.00E-01
CS136	6.43E+03	1.01E+03	2.26E+03	8.93E+03	4.97E+03	0.00E-01	6.81E+02	0.00E-01
CS137	2.61E+04	7.73E+02	2.92E+04	3.99E+04	1.35E+04	0.00E-01	4.50E+03	0.00E-01
CS138	0.00E-01	0.00E-01	0.00E-01	0.00E-01	0.00E-01	0.00E-01	0.00E-01	0.00E-01
BA139	5.81E-06	3.52E-04	1.98E-04	1.41E-07	1.32E-07	0.00E-01	8.02E-08	0.00E-01
BA140	4.61E+02	1.45E+04	7.04E+03	8.85E+00	3.01E+00	0.00E-01	5.07E+00	0.00E-01
BA141	0.00E-01	0.00E-01	0.00E-01	0.00E-01	0.00E-01	0.00E-01	0.00E-01	0.00E-01
BA142	0.00E-01	0.00E-01	0.00E-01	0.00E-01	0.00E-01	0.00E-01	0.00E-01	0.00E-01
LA140	8.07E-02	2.24E+04	6.06E-01	3.05E-01	0.00E-01	0.00E-01	0.00E-01	0.00E-01
LA142	1.08E-07	3.18E-03	9.57E-07	4.35E-07	0.00E-01	0.00E-01	0.00E-01	0.00E-01
CE141	2.57E-01	8.68E+03	3.36E+00	2.27E+00	1.05E+00	0.00E-01	0.00E-01	0.00E-01
CE143	2.99E-02	1.01E+04	3.66E-01	2.70E+02	1.19E-01	0.00E-01	0.00E-01	0.00E-01
CE144	9.57E+00	6.03E+04	1.78E+02	7.46E+01	4.42E+01	0.00E-01	0.00E-01	0.00E-01
PR143	1.59E-01	1.40E+04	3.20E+00	1.28E+00	7.42E-01	0.00E-01	0.00E-01	0.00E-01
PR144	0.00E-01	0.00E-01	0.00E-01	0.00E-01	0.00E-01	0.00E-01	0.00E-01	0.00E-01
ND147	1.50E-01	1.20E+04	2.16E+00	2.50E+00	1.46E+00	0.00E-01	0.00E-01	0.00E-01
W 187	5.50E+00	5.15E+03	1.88E+01	1.57E+01	0.00E-01	0.00E-01	0.00E-01	0.00E-01
NP239	1.76E-02	6.55E+03	3.25E-01	3.20E-02	9.97E-02	0.00E-01	0.00E-01	0.00E-01

DOSE TRANSFER FACTORS FOR RADIONUCLIDES IN EFFLUENT WATER

AGE = ADULT
PATHWAY = FRESH WATER FISH

	TOTAL BODY	GI-LLI	BONE	LIVER	KIDNEY	THYROID	LUNG	SKIN
				(mrem gal)/(Ci min)				
H 3	5.68E-01	5.68E-01	0.00E-01	5.68E-01	5.68E-01	5.68E-01	5.68E-01	0.00E-01
C 14	2.75E+04	2.75E+04	1.38E+05	2.75E+04	2.75E+04	2.75E+04	2.75E+04	0.00E-01
NA 24	5.90E+02	5.90E+02	5.90E+02	5.90E+02	5.90E+02	5.90E+02	5.90E+02	0.00E-01
P 32	7.49E+06	2.18E+07	1.94E+08	1.20E+07	0.00E-01	0.00E-01	0.00E-01	0.00E-01
CR 51	5.47E+00	1.37E+03	0.00E-01	0.00E-01	1.20E+00	3.27E+00	7.26E+00	0.00E-01
MN 54	3.67E+03	5.89E+04	0.00E-01	1.92E+04	5.72E+03	0.00E-01	0.00E-01	0.00E-01
MN 56	1.28E-01	2.31E+01	0.00E-01	7.24E-01	9.19E-01	0.00E-01	0.00E-01	0.00E-01
FE 55	4.66E+02	1.15E+03	2.90E+03	2.00E+03	0.00E-01	0.00E-01	1.12E+03	0.00E-01
FE 59	4.06E+03	3.53E+04	4.50E+03	1.06E+04	0.00E-01	0.00E-01	2.96E+03	0.00E-01
CO 58	8.71E+02	7.88E+03	0.00E-01	3.89E+02	0.00E-01	0.00E-01	0.00E-01	0.00E-01
CO 60	2.49E+03	2.12E+04	0.00E-01	1.13E+03	0.00E-01	0.00E-01	0.00E-01	0.00E-01
NI 63	4.59E+03	1.98E+03	1.37E+05	9.49E+03	0.00E-01	0.00E-01	0.00E-01	0.00E-01
NI 65	4.36E-02	2.42E+00	7.36E-01	9.56E-02	0.00E-01	0.00E-01	0.00E-01	0.00E-01
CU 64	5.51E+00	1.00E+03	0.00E-01	1.17E+01	2.96E+01	0.00E-01	0.00E-01	0.00E-01
ZN 65	1.46E+05	2.04E+05	1.02E+05	3.24E+05	2.16E+05	0.00E-01	0.00E-01	0.00E-01
ZN 69	6.48E-07	1.40E-06	4.87E-06	9.32E-06	6.05E-06	0.00E-01	0.00E-01	0.00E-01
BR 83	1.65E-01	2.37E-01	0.00E-01	0.00E-01	0.00E-01	0.00E-01	0.00E-01	0.00E-01
BR 84	0.00E-01	0.00E-01	0.00E-01	0.00E-01	0.00E-01	0.00E-01	0.00E-01	0.00E-01
BR 85	0.00E-01	0.00E-01	0.00E-01	0.00E-01	0.00E-01	0.00E-01	0.00E-01	0.00E-01
RB 86	2.00E+05	8.45E+04	0.00E-01	4.28E+05	0.00E-01	0.00E-01	0.00E-01	0.00E-01
RB 88	0.00E-01	0.00E-01	0.00E-01	0.00E-01	0.00E-01	0.00E-01	0.00E-01	0.00E-01
RB 89	0.00E-01	0.00E-01	0.00E-01	0.00E-01	0.00E-01	0.00E-01	0.00E-01	0.00E-01
SR 89	2.76E+03	1.54E+04	9.60E+04	0.00E-01	0.00E-01	0.00E-01	0.00E-01	0.00E-01
SR 90	5.53E+04	6.92E+04	2.75E+06	0.00E-01	0.00E-01	0.00E-01	0.00E-01	0.00E-01
SR 91	1.24E+01	1.47E+03	3.08E+02	0.00E-01	0.00E-01	0.00E-01	0.00E-01	0.00E-01
SR 92	6.21E-02	2.85E+01	1.44E+00	0.00E-01	0.00E-01	0.00E-01	0.00E-01	0.00E-01
Y 90	5.24E-02	2.07E+04	1.95E+00	0.00E-01	0.00E-01	0.00E-01	0.00E-01	0.00E-01
Y 91M	0.00E-01	0.00E-01	0.00E-01	0.00E-01	0.00E-01	0.00E-01	0.00E-01	0.00E-01
Y 91	9.81E-01	2.02E+04	3.67E+01	0.00E-01	0.00E-01	0.00E-01	0.00E-01	0.00E-01
Y 92	5.90E-05	3.54E+01	2.02E-03	0.00E-01	0.00E-01	0.00E-01	0.00E-01	0.00E-01
Y 93	3.72E-03	4.27E+03	1.35E-01	0.00E-01	0.00E-01	0.00E-01	0.00E-01	0.00E-01
ZR 95	2.27E-01	1.06E+03	1.05E+00	3.35E-01	5.26E-01	0.00E-01	0.00E-01	0.00E-01
ZR 97	2.00E-03	1.36E+03	2.17E-02	4.38E-03	6.62E-03	0.00E-01	0.00E-01	0.00E-01
NB 95	5.76E+02	6.51E+06	1.93E+03	1.07E+03	1.06E+03	0.00E-01	0.00E-01	0.00E-01
MO 99	6.71E+01	8.17E+02	0.00E-01	3.52E+02	7.98E+02	0.00E-01	0.00E-01	0.00E-01
TC 99M	8.75E-02	4.07E+00	2.43E-03	6.87E-03	1.04E-01	0.00E-01	3.37E-03	0.00E-01
TC101	0.00E-01	0.00E-01	0.00E-01	0.00E-01	0.00E-01	0.00E-01	0.00E-01	0.00E-01

DOSE TRANSFER FACTORS FOR RADIONUCLIDES IN EFFLUENT WATER

AGE = ADULT
PATHWAY = FRESH WATER FISH

	TOTAL BODY	GI-LLI	BONE	LIVER	KIDNEY	THYROID	LUNG	SKIN
				(mrem gal)/(Ci min)				
RU103	8.25E+00	2.24E+03	1.91E+01	0.00E-01	7.31E+01	0.00E-01	0.00E-01	0.00E-01
RU105	1.48E-02	2.30E+01	3.76E-02	0.00E-01	4.86E-01	0.00E-01	0.00E-01	0.00E-01
RU106	3.66E+01	1.87E+04	2.89E+02	0.00E-01	5.58E+02	0.00E-01	0.00E-01	0.00E-01
AG110M	2.12E+00	1.46E+03	3.87E+00	3.58E+00	7.03E+00	0.00E-01	0.00E-01	0.00E-01
TE125M	1.49E+03	4.46E+04	1.12E+04	4.04E+03	4.54E+04	3.36E+03	0.00E-01	0.00E-01
TE127M	3.45E+03	9.51E+04	2.83E+04	1.01E+04	1.15E+05	7.25E+03	0.00E-01	0.00E-01
TE127	1.68E+01	6.12E+03	7.76E+01	2.79E+01	3.16E+02	5.75E+01	0.00E-01	0.00E-01
TE129M	7.51E+03	2.39E+05	4.75E+04	1.77E+04	1.98E+05	1.63E+04	0.00E-01	0.00E-01
TE129	1.79E-05	5.56E-05	7.36E-05	2.77E-05	3.09E-04	5.65E-05	0.00E-01	0.00E-01
TE131M	1.70E+03	2.03E+05	4.18E+03	2.04E+03	2.07E+04	3.24E+03	0.00E-01	0.00E-01
TE131	0.00E-01	0.00E-01	0.00E-01	0.00E-01	0.00E-01	0.00E-01	0.00E-01	0.00E-01
TE132	5.21E+03	2.62E+05	8.58E+03	5.55E+03	5.35E+04	6.13E+03	0.00E-01	0.00E-01
I 130	3.59E+01	7.84E+01	3.09E+01	9.11E+01	1.42E+02	7.72E+03	0.00E-01	0.00E-01
I 131	4.94E+02	2.28E+02	6.03E+02	8.62E+02	1.48E+03	2.83E+05	0.00E-01	0.00E-01
I 132	2.11E-02	1.13E-02	2.25E-02	6.02E-02	9.60E-02	2.11E+00	0.00E-01	0.00E-01
I 133	5.33E+01	1.57E+02	1.01E+02	1.75E+02	3.05E+02	2.57E+04	0.00E-01	0.00E-01
I 134	8.36E-08	2.04E-10	8.60E-08	2.34E-07	3.72E-07	4.05E-06	0.00E-01	0.00E-01
I 135	5.37E+00	1.64E+01	5.56E+00	1.46E+01	2.33E+01	9.60E+02	0.00E-01	0.00E-01
CS134	2.55E+06	5.45E+04	1.31E+06	3.12E+06	1.01E+06	0.00E-01	3.35E+05	0.00E-01
CS136	3.70E+05	5.84E+04	1.30E+05	5.14E+05	2.86E+05	0.00E-01	3.92E+04	0.00E-01
CS137	1.50E+06	4.45E+04	1.68E+06	2.30E+06	7.80E+05	0.00E-01	2.59E+05	0.00E-01
CS138	0.00E-01	0.00E-01	0.00E-01	0.00E-01	0.00E-01	0.00E-01	0.00E-01	0.00E-01
BA139	6.35E-07	3.85E-05	2.17E-05	1.55E-08	1.45E-08	0.00E-01	8.77E-09	0.00E-01
BA140	5.31E+01	1.67E+03	8.10E+02	1.02E+00	3.46E-01	0.00E-01	5.83E-01	0.00E-01
BA141	0.00E-01	0.00E-01	0.00E-01	0.00E-01	0.00E-01	0.00E-01	0.00E-01	0.00E-01
BA142	0.00E-01	0.00E-01	0.00E-01	0.00E-01	0.00E-01	0.00E-01	0.00E-01	0.00E-01
LA140	5.80E-02	1.61E+04	4.35E-01	2.19E-01	0.00E-01	0.00E-01	0.00E-01	0.00E-01
LA142	7.45E-08	2.18E-03	6.58E-07	2.99E-07	0.00E-01	0.00E-01	0.00E-01	0.00E-01
CE141	7.41E-03	2.50E+02	9.65E-02	6.53E-02	3.03E-02	0.00E-01	0.00E-01	0.00E-01
CE143	8.59E-04	2.90E+02	1.05E-02	7.77E+00	3.42E-03	0.00E-01	0.00E-01	0.00E-01
CE144	2.75E-01	1.73E+03	5.13E+00	2.14E+00	1.27E+00	0.00E-01	0.00E-01	0.00E-01
PR143	1.14E-01	1.01E+04	2.30E+00	9.24E-01	5.33E-01	0.00E-01	0.00E-01	0.00E-01
PR144	0.00E-01	0.00E-01	0.00E-01	0.00E-01	0.00E-01	0.00E-01	0.00E-01	0.00E-01
ND147	1.08E-01	8.63E+03	1.56E+00	1.80E+00	1.05E+00	0.00E-01	0.00E-01	0.00E-01
W 187	1.89E+02	1.77E+05	6.48E+02	5.41E+02	0.00E-01	0.00E-01	0.00E-01	0.00E-01
NP239	5.06E-03	1.88E+03	9.34E-02	9.18E-03	2.86E-02	0.00E-01	0.00E-01	0.00E-01

DOSE TRANSFER FACTORS FOR RADIONUCLIDES IN EFFLUENT WATER

AGE = ADULT
PATHWAY = FRESH WATER INVERTEBRATES

	TOTAL BODY	GI-LLI	BONE	LIVER	KIDNEY	THYROID	LUNG	SKIN
				(mrem gal)/(Ci min)				
H 3	1.35E-01	1.35E-01	0.00E-01	1.35E-01	1.35E-01	1.35E-01	1.35E-01	0.00E-01
C 14	1.30E+04	1.30E+04	6.48E+04	1.30E+04	1.30E+04	1.30E+04	1.30E+04	0.00E-01
NA 24	2.81E+02	2.81E+02	2.81E+02	2.81E+02	2.81E+02	2.81E+02	2.81E+02	0.00E-01
P 32	3.57E+05	1.04E+06	9.22E+06	5.73E+05	0.00E-01	0.00E-01	0.00E-01	0.00E-01
CR 51	1.30E+01	3.27E+03	0.00E-01	0.00E-01	2.87E+00	7.78E+00	1.73E+01	0.00E-01
MN 54	1.96E+05	3.15E+06	0.00E-01	1.03E+06	3.06E+05	0.00E-01	0.00E-01	0.00E-01
MN 56	6.88E+00	1.24E+03	0.00E-01	3.88E+01	4.92E+01	0.00E-01	0.00E-01	0.00E-01
FE 55	3.55E+03	8.74E+03	2.21E+04	1.52E+04	0.00E-01	0.00E-01	8.50E+03	0.00E-01
FE 59	3.09E+04	2.69E+05	3.43E+04	8.06E+04	0.00E-01	0.00E-01	2.25E+04	0.00E-01
CO 58	8.30E+02	7.50E+03	0.00E-01	3.70E+02	0.00E-01	0.00E-01	0.00E-01	0.00E-01
CO 60	2.37E+03	2.02E+04	0.00E-01	1.07E+03	0.00E-01	0.00E-01	0.00E-01	0.00E-01
NI 63	1.09E+03	4.72E+02	3.26E+04	2.26E+03	0.00E-01	0.00E-01	0.00E-01	0.00E-01
NI 65	1.04E-02	5.77E-01	1.75E-01	2.28E-02	0.00E-01	0.00E-01	0.00E-01	0.00E-01
CU 64	1.05E+01	1.91E+03	0.00E-01	2.24E+01	5.64E+01	0.00E-01	0.00E-01	0.00E-01
ZN 65	1.74E+05	2.43E+05	1.21E+05	3.85E+05	2.58E+05	0.00E-01	0.00E-01	0.00E-01
ZN 69	7.71E-07	1.67E-06	5.80E-06	1.11E-05	7.21E-06	0.00E-01	0.00E-01	0.00E-01
BR 83	3.08E-02	4.44E-02	0.00E-01	0.00E-01	0.00E-01	0.00E-01	0.00E-01	0.00E-01
BR 84	0.00E-01	0.00E-01	0.00E-01	0.00E-01	0.00E-01	0.00E-01	0.00E-01	0.00E-01
BR 85	0.00E-01	0.00E-01	0.00E-01	0.00E-01	0.00E-01	0.00E-01	0.00E-01	0.00E-01
RB 86	2.38E+04	1.01E+04	0.00E-01	5.10E+04	0.00E-01	0.00E-01	0.00E-01	0.00E-01
RB 88	0.00E-01	0.00E-01	0.00E-01	0.00E-01	0.00E-01	0.00E-01	0.00E-01	0.00E-01
RB 89	0.00E-01	0.00E-01	0.00E-01	0.00E-01	0.00E-01	0.00E-01	0.00E-01	0.00E-01
SR 89	2.19E+03	1.22E+04	7.62E+04	0.00E-01	0.00E-01	0.00E-01	0.00E-01	0.00E-01
SR 90	4.39E+04	5.49E+04	2.18E+06	0.00E-01	0.00E-01	0.00E-01	0.00E-01	0.00E-01
SR 91	9.87E+00	1.16E+03	2.44E+02	0.00E-01	0.00E-01	0.00E-01	0.00E-01	0.00E-01
SR 92	4.93E-02	2.26E+01	1.14E+00	0.00E-01	0.00E-01	0.00E-01	0.00E-01	0.00E-01
Y 90	4.99E-01	1.97E+05	1.86E+01	0.00E-01	0.00E-01	0.00E-01	0.00E-01	0.00E-01
Y 91M	0.00E-01	0.00E-01	0.00E-01	0.00E-01	0.00E-01	0.00E-01	0.00E-01	0.00E-01
Y 91	9.35E+00	1.92E+05	3.50E+02	0.00E-01	0.00E-01	0.00E-01	0.00E-01	0.00E-01
Y 92	5.62E-04	3.37E+02	1.92E-02	0.00E-01	0.00E-01	0.00E-01	0.00E-01	0.00E-01
Y 93	3.54E-02	4.07E+04	1.28E+00	0.00E-01	0.00E-01	0.00E-01	0.00E-01	0.00E-01
ZR 95	1.10E-01	5.14E+02	5.06E-01	1.62E-01	2.54E-01	0.00E-01	0.00E-01	0.00E-01
ZR 97	9.69E-04	6.56E+02	1.05E-02	2.12E-03	3.20E-03	0.00E-01	0.00E-01	0.00E-01
NB 95	4.58E-01	5.17E+03	1.53E+00	8.51E-01	8.41E-01	0.00E-01	0.00E-01	0.00E-01
MO 99	1.60E+01	1.95E+02	0.00E-01	8.39E+01	1.90E+02	0.00E-01	0.00E-01	0.00E-01
TC 99M	6.94E-03	3.23E-01	1.93E-04	5.45E-04	8.28E-03	0.00E-01	2.67E-04	0.00E-01
TC101	0.00E-01	0.00E-01	0.00E-01	0.00E-01	0.00E-01	0.00E-01	0.00E-01	0.00E-01

DOSE TRANSFER FACTORS FOR RADIONUCLIDES IN EFFLUENT WATER

AGE = ADULT
PATHWAY = FRESH WATER INVERTEBRATES

	TOTAL BODY	GI-LLI	BONE	LIVER	KIDNEY	THYROID	LUNG	SKIN
				(mrem gal)/(Ci min)				
RU103	5.89E+01	1.60E+04	1.37E+02	0.00E-01	5.22E+02	0.00E-01	0.00E-01	0.00E-01
RU105	1.06E-01	1.64E+02	2.68E-01	0.00E-01	3.47E+00	0.00E-01	0.00E-01	0.00E-01
RU106	2.61E+02	1.34E+05	2.07E+03	0.00E-01	3.99E+03	0.00E-01	0.00E-01	0.00E-01
AG110M	1.69E+02	1.16E+05	3.08E+02	2.85E+02	5.61E+02	0.00E-01	0.00E-01	0.00E-01
TE125M	5.43E+03	1.62E+05	4.05E+04	1.47E+04	1.65E+05	1.22E+04	0.00E-01	0.00E-01
TE127M	1.25E+04	3.45E+05	1.03E+05	3.68E+04	4.18E+05	2.63E+04	0.00E-01	0.00E-01
TE127	6.10E+01	2.22E+04	2.82E+02	1.01E+02	1.15E+03	2.09E+02	0.00E-01	0.00E-01
TE129M	2.73E+04	8.68E+05	1.72E+05	6.43E+04	7.19E+05	5.92E+04	0.00E-01	0.00E-01
TE129	6.51E-05	2.02E-04	2.67E-04	1.00E-04	1.12E-03	2.05E-04	0.00E-01	0.00E-01
TE131M	6.18E+03	7.37E+05	1.52E+04	7.42E+03	7.51E+04	1.17E+04	0.00E-01	0.00E-01
TE131	0.00E-01	0.00E-01	0.00E-01	0.00E-01	0.00E-01	0.00E-01	0.00E-01	0.00E-01
TE132	1.89E+04	9.53E+05	3.12E+04	2.01E+04	1.94E+05	2.22E+04	0.00E-01	0.00E-01
I 130	2.85E+00	6.22E+00	2.45E+00	7.23E+00	1.13E+01	6.12E+02	0.00E-01	0.00E-01
I 131	3.92E+01	1.81E+01	4.79E+01	6.84E+01	1.17E+02	2.24E+04	0.00E-01	0.00E-01
I 132	1.67E-03	8.98E-04	1.79E-03	4.78E-03	7.62E-03	1.67E-01	0.00E-01	0.00E-01
I 133	4.23E+00	1.25E+01	7.98E+00	1.39E+01	2.42E+01	2.04E+03	0.00E-01	0.00E-01
I 134	6.64E-09	1.62E-11	6.83E-09	1.86E-08	2.95E-08	3.21E-07	0.00E-01	0.00E-01
I 135	4.26E-01	1.30E+00	4.41E-01	1.15E+00	1.85E+00	7.62E+01	0.00E-01	0.00E-01
CS134	3.03E+05	6.49E+03	1.56E+05	3.71E+05	1.20E+05	0.00E-01	3.99E+04	0.00E-01
CS136	4.40E+04	6.95E+03	1.55E+04	6.11E+04	3.40E+04	0.00E-01	4.66E+03	0.00E-01
CS137	1.79E+05	5.29E+03	2.00E+05	2.73E+05	9.28E+04	0.00E-01	3.09E+04	0.00E-01
CS138	0.00E-01	0.00E-01	0.00E-01	0.00E-01	0.00E-01	0.00E-01	0.00E-01	0.00E-01
BA139	7.56E-06	4.58E-04	2.58E-04	1.84E-07	1.72E-07	0.00E-01	1.04E-07	0.00E-01
BA140	6.32E+02	1.99E+04	9.65E+03	1.21E+01	4.12E+00	0.00E-01	6.94E+00	0.00E-01
BA141	0.00E-01	0.00E-01	0.00E-01	0.00E-01	0.00E-01	0.00E-01	0.00E-01	0.00E-01
BA142	0.00E-01	0.00E-01	0.00E-01	0.00E-01	0.00E-01	0.00E-01	0.00E-01	0.00E-01
LA140	5.52E-01	1.53E+05	4.14E+00	2.09E+00	0.00E-01	0.00E-01	0.00E-01	0.00E-01
LA142	7.10E-07	2.08E-02	6.26E-06	2.85E-06	0.00E-01	0.00E-01	0.00E-01	0.00E-01
CE141	1.76E+00	5.94E+04	2.30E+01	1.56E+01	7.22E+00	0.00E-01	0.00E-01	0.00E-01
CE143	2.05E-01	6.91E+04	2.50E+00	1.85E+03	8.14E-01	0.00E-01	0.00E-01	0.00E-01
CE144	6.56E+01	4.13E+05	1.22E+03	5.11E+02	3.03E+02	0.00E-01	0.00E-01	0.00E-01
PR143	1.09E+00	9.61E+04	2.19E+01	8.80E+00	5.08E+00	0.00E-01	0.00E-01	0.00E-01
PR144	0.00E-01	0.00E-01	0.00E-01	0.00E-01	0.00E-01	0.00E-01	0.00E-01	0.00E-01
ND147	1.02E+00	8.22E+04	1.48E+01	1.71E+01	1.00E+01	0.00E-01	0.00E-01	0.00E-01
W 187	3.76E-01	3.52E+02	1.28E+00	1.07E+00	0.00E-01	0.00E-01	0.00E-01	0.00E-01
NP239	4.82E-02	1.79E+04	8.89E-01	8.74E-02	2.73E-01	0.00E-01	0.00E-01	0.00E-01

DOSE TRANSFER FACTORS FOR RADIONUCLIDES IN EFFLUENT WATER

AGE = ADULT
PATHWAY = IRRIGATED FRESH LEAFY VEGETABLES

	TOTAL BODY	GI-LLI	BONE	LIVER	KIDNEY	THYROID	LUNG	SKIN
				(mrem gal)/(Ci min)				
H 3	1.92E+00	1.92E+00	0.00E-01	1.92E+00	1.92E+00	1.92E+00	1.92E+00	0.00E-01
C 14	2.03E+03	2.03E+03	1.01E+04	2.03E+03	2.03E+03	2.03E+03	2.03E+03	0.00E-01
NA 24	6.22E+00	6.22E+00	6.22E+00	6.22E+00	6.22E+00	6.22E+00	6.22E+00	0.00E-01
P 32	9.84E+02	2.86E+03	2.54E+04	1.58E+03	0.00E-01	0.00E-01	0.00E-01	0.00E-01
CR 51	4.60E-01	1.16E+02	0.00E-01	0.00E-01	1.01E-01	2.75E-01	6.10E-01	0.00E-01
MN 54	2.16E+02	3.47E+03	0.00E-01	1.13E+03	3.37E+02	0.00E-01	0.00E-01	0.00E-01
MN 56	4.90E-05	8.81E-03	0.00E-01	2.76E-04	3.50E-04	0.00E-01	0.00E-01	0.00E-01
FE 55	1.12E+02	2.76E+02	6.97E+02	4.81E+02	0.00E-01	0.00E-01	2.68E+02	0.00E-01
FE 59	7.75E+02	6.74E+03	8.61E+02	2.02E+03	0.00E-01	0.00E-01	5.65E+02	0.00E-01
CO 58	3.63E+02	3.28E+03	0.00E-01	1.62E+02	0.00E-01	0.00E-01	0.00E-01	0.00E-01
CO 60	1.21E+03	1.03E+04	0.00E-01	5.50E+02	0.00E-01	0.00E-01	0.00E-01	0.00E-01
NI 63	1.16E+03	5.02E+02	3.47E+04	2.41E+03	0.00E-01	0.00E-01	0.00E-01	0.00E-01
NI 65	6.50E-05	3.62E-03	1.10E-03	1.42E-04	0.00E-01	0.00E-01	0.00E-01	0.00E-01
CU 64	9.79E-02	1.78E+01	0.00E-01	2.08E-01	5.26E-01	0.00E-01	0.00E-01	0.00E-01
ZN 65	1.80E+03	2.51E+03	1.25E+03	3.99E+03	2.67E+03	0.00E-01	0.00E-01	0.00E-01
ZN 69	1.22E-11	2.63E-11	9.14E-11	1.75E-10	1.14E-10	0.00E-01	0.00E-01	0.00E-01
BR 83	5.52E-05	7.94E-05	0.00E-01	0.00E-01	0.00E-01	0.00E-01	0.00E-01	0.00E-01
BR 84	1.45E-16	1.14E-21	0.00E-01	0.00E-01	0.00E-01	0.00E-01	0.00E-01	0.00E-01
BR 85	3.62E-37	0.00E-01	0.00E-01	0.00E-01	0.00E-01	0.00E-01	0.00E-01	0.00E-01
RB 86	1.46E+03	6.17E+02	0.00E-01	3.13E+03	0.00E-01	0.00E-01	0.00E-01	0.00E-01
RB 88	3.95E-28	1.03E-38	0.00E-01	7.45E-28	0.00E-01	0.00E-01	0.00E-01	0.00E-01
RB 89	3.31E-30	2.73E-43	0.00E-01	4.71E-30	0.00E-01	0.00E-01	0.00E-01	0.00E-01
SR 89	1.82E+03	1.01E+04	6.33E+04	0.00E-01	0.00E-01	0.00E-01	0.00E-01	0.00E-01
SR 90	6.25E+04	7.82E+04	3.11E+06	0.00E-01	0.00E-01	0.00E-01	0.00E-01	0.00E-01
SR 91	2.74E-01	3.23E+01	6.78E+00	0.00E-01	0.00E-01	0.00E-01	0.00E-01	0.00E-01
SR 92	3.38E-04	1.55E-01	7.82E-03	0.00E-01	0.00E-01	0.00E-01	0.00E-01	0.00E-01
Y 90	8.54E-03	3.37E+03	3.18E-01	0.00E-01	0.00E-01	0.00E-01	0.00E-01	0.00E-01
Y 91M	1.82E-15	1.38E-13	4.71E-14	0.00E-01	0.00E-01	0.00E-01	0.00E-01	0.00E-01
Y 91	7.92E-01	1.63E+04	2.96E+01	0.00E-01	0.00E-01	0.00E-01	0.00E-01	0.00E-01
Y 92	5.32E-07	3.19E-01	1.82E-05	0.00E-01	0.00E-01	0.00E-01	0.00E-01	0.00E-01
Y 93	1.04E-04	1.20E+02	3.78E-03	0.00E-01	0.00E-01	0.00E-01	0.00E-01	0.00E-01
ZR 95	1.41E+00	6.60E+03	6.49E+00	2.08E+00	3.27E+00	0.00E-01	0.00E-01	0.00E-01
ZR 97	7.19E-04	4.87E+02	7.79E-03	1.57E-03	2.37E-03	0.00E-01	0.00E-01	0.00E-01
NB 95	3.47E-01	3.92E+03	1.16E+00	6.45E-01	6.38E-01	0.00E-01	0.00E-01	0.00E-01
MO 99	2.80E+01	3.41E+02	0.00E-01	1.47E+02	3.33E+02	0.00E-01	0.00E-01	0.00E-01
TC 99M	2.38E-03	1.11E-01	6.61E-05	1.87E-04	2.83E-03	0.00E-01	9.15E-05	0.00E-01
TC101	3.20E-31	9.81E-44	2.26E-32	3.26E-32	5.87E-31	0.00E-01	1.67E-32	0.00E-01

DOSE TRANSFER FACTORS FOR RADIONUCLIDES IN EFFLUENT WATER

AGE = ADULT
PATHWAY = IRRIGATED FRESH LEAFY VEGETABLES

	TOTAL BODY	GI-LLI	BONE	LIVER	KIDNEY	THYROID	LUNG	SKIN
				(mrem gal)/(Ci min)				
RU103	1.54E+01	4.16E+03	3.56E+01	0.00E-01	1.36E+02	0.00E-01	0.00E-01	0.00E-01
RU105	4.31E-04	6.68E-01	1.09E-03	0.00E-01	1.41E-02	0.00E-01	0.00E-01	0.00E-01
RU106	8.73E+01	4.47E+04	6.90E+02	0.00E-01	1.33E+03	0.00E-01	0.00E-01	0.00E-01
AG110M	2.20E+01	1.51E+04	4.00E+01	3.70E+01	7.28E+01	0.00E-01	0.00E-01	0.00E-01
TE125M	7.96E+01	2.37E+03	5.94E+02	2.15E+02	2.42E+03	1.79E+02	0.00E-01	0.00E-01
TE127M	2.08E+02	5.72E+03	1.71E+03	6.10E+02	6.93E+03	4.36E+02	0.00E-01	0.00E-01
TE127	2.76E-02	1.01E+01	1.27E-01	4.57E-02	5.19E-01	9.44E-02	0.00E-01	0.00E-01
TE129M	3.47E+02	1.10E+04	2.19E+03	8.18E+02	9.15E+03	7.53E+02	0.00E-01	0.00E-01
TE129	2.33E-09	7.23E-09	9.59E-09	3.60E-09	4.03E-08	7.36E-09	0.00E-01	0.00E-01
TE131M	8.86E+00	1.06E+03	2.17E+01	1.06E+01	1.08E+02	1.69E+01	0.00E-01	0.00E-01
TE131	2.02E-21	9.06E-22	6.40E-21	2.67E-21	2.80E-20	5.26E-21	0.00E-01	0.00E-01
TE132	6.34E+01	3.20E+03	1.04E+02	6.76E+01	6.51E+02	7.46E+01	0.00E-01	0.00E-01
I 130	2.07E+00	4.52E+00	1.78E+00	5.25E+00	8.19E+00	4.45E+02	0.00E-01	0.00E-01
I 131	3.07E+02	1.41E+02	3.75E+02	5.36E+02	9.19E+02	1.76E+05	0.00E-01	0.00E-01
I 132	1.87E-04	1.00E-04	2.00E-04	5.34E-04	8.51E-04	1.87E-02	0.00E-01	0.00E-01
I 133	5.16E+00	1.52E+01	9.74E+00	1.69E+01	2.96E+01	2.49E+03	0.00E-01	0.00E-01
I 134	1.82E-10	4.44E-13	1.87E-10	5.09E-10	8.10E-10	8.82E-09	0.00E-01	0.00E-01
I 135	1.61E-01	4.92E-01	1.67E-01	4.36E-01	6.99E-01	2.87E+01	0.00E-01	0.00E-01
CS134	3.07E+04	6.56E+02	1.58E+04	3.75E+04	1.21E+04	0.00E-01	4.03E+03	0.00E-01
CS136	2.28E+03	3.60E+02	8.04E+02	3.17E+03	1.76E+03	0.00E-01	2.42E+02	0.00E-01
CS137	1.86E+04	5.51E+02	2.08E+04	2.85E+04	9.67E+03	0.00E-01	3.21E+03	0.00E-01
CS138	2.37E-16	2.04E-21	2.42E-16	4.78E-16	3.52E-16	0.00E-01	3.47E-17	0.00E-01
BA139	1.05E-08	6.39E-07	3.60E-07	2.57E-10	2.40E-10	0.00E-01	1.46E-10	0.00E-01
BA140	1.62E+02	5.09E+03	2.47E+03	3.11E+00	1.06E+00	0.00E-01	1.78E+00	0.00E-01
BA141	7.72E-29	1.08E-36	2.29E-27	1.73E-30	1.61E-30	0.00E-01	9.81E-31	0.00E-01
BA142	3.45E-32	0.00E-01	5.48E-31	5.63E-34	4.76E-34	0.00E-01	3.19E-34	0.00E-01
LA140	6.27E-03	1.74E+03	4.70E-02	2.37E-02	0.00E-01	0.00E-01	0.00E-01	0.00E-01
LA142	2.33E-10	6.82E-06	2.05E-09	9.34E-10	0.00E-01	0.00E-01	0.00E-01	0.00E-01
CE141	1.31E-01	4.41E+03	1.71E+00	1.15E+00	5.35E-01	0.00E-01	0.00E-01	0.00E-01
CE143	1.94E-03	6.56E+02	2.37E-02	1.75E+01	7.72E-03	0.00E-01	0.00E-01	0.00E-01
CE144	6.44E+00	4.05E+04	1.20E+02	5.01E+01	2.97E+01	0.00E-01	0.00E-01	0.00E-01
PR143	5.75E-02	5.08E+03	1.16E+00	4.65E-01	2.68E-01	0.00E-01	0.00E-01	0.00E-01
PR144	2.51E-33	7.11E-39	4.94E-32	2.05E-32	1.16E-32	0.00E-01	0.00E-01	0.00E-01
ND147	4.87E-02	3.90E+03	7.03E-01	8.13E-01	4.75E-01	0.00E-01	0.00E-01	0.00E-01
W 187	2.62E-01	2.45E+02	8.97E-01	7.49E-01	0.00E-01	0.00E-01	0.00E-01	0.00E-01
NP239	1.85E-03	6.89E+02	3.42E-02	3.36E-03	1.05E-02	0.00E-01	0.00E-01	0.00E-01

DOSE TRANSFER FACTORS FOR RADIONUCLIDES IN EFFLUENT WATER

AGE = ADULT
PATHWAY = IRRIGATED STORED FRUIT, VEGETABLES, GRAIN

	TOTAL BODY	GI-LLI	BONE	LIVER	KIDNEY	THYROID	LUNG	SKIN
				(mrem gal)/(Ci min)				
H 3	1.55E+01	1.55E+01	0.00E-01	1.55E+01	1.55E+01	1.55E+01	1.55E+01	0.00E-01
C 14	1.65E+04	1.65E+04	8.23E+04	1.65E+04	1.65E+04	1.65E+04	1.65E+04	0.00E-01
NA 24	1.34E-24	1.34E-24	1.34E-24	1.34E-24	1.34E-24	1.34E-24	1.34E-24	0.00E-01
P 32	4.58E+02	1.33E+03	1.18E+04	7.36E+02	0.00E-01	0.00E-01	0.00E-01	0.00E-01
CR 51	8.52E-01	2.14E+02	0.00E-01	0.00E-01	1.88E-01	5.09E-01	1.13E+00	0.00E-01
MN 54	1.54E+03	2.47E+04	0.00E-01	8.08E+03	2.40E+03	0.00E-01	0.00E-01	0.00E-01
MN 56	2.27E-27	4.09E-25	0.00E-01	1.28E-26	1.63E-26	0.00E-01	0.00E-01	0.00E-01
FE 55	8.75E+02	2.15E+03	5.43E+03	3.75E+03	0.00E-01	0.00E-01	2.09E+03	0.00E-01
FE 59	2.52E+03	2.19E+04	2.79E+03	6.57E+03	0.00E-01	0.00E-01	1.83E+03	0.00E-01
CO 58	1.66E+03	1.50E+04	0.00E-01	7.39E+02	0.00E-01	0.00E-01	0.00E-01	0.00E-01
CO 60	9.66E+03	8.23E+04	0.00E-01	4.38E+03	0.00E-01	0.00E-01	0.00E-01	0.00E-01
NI 63	9.45E+03	4.08E+03	2.82E+05	1.95E+04	0.00E-01	0.00E-01	0.00E-01	0.00E-01
NI 65	3.40E-27	1.89E-25	5.74E-26	7.46E-27	0.00E-01	0.00E-01	0.00E-01	0.00E-01
CU 64	2.59E-26	4.70E-24	0.00E-01	5.51E-26	1.39E-25	0.00E-01	0.00E-01	0.00E-01
ZN 65	1.24E+04	1.73E+04	8.62E+03	2.74E+04	1.83E+04	0.00E-01	0.00E-01	0.00E-01
ZN 69	3.58E-29	7.74E-29	2.69E-28	5.15E-28	3.35E-28	0.00E-01	0.00E-01	0.00E-01
BR 83	4.12E-27	5.93E-27	0.00E-01	0.00E-01	0.00E-01	0.00E-01	0.00E-01	0.00E-01
BR 84	4.30E-28	3.38E-33	0.00E-01	0.00E-01	0.00E-01	0.00E-01	0.00E-01	0.00E-01
BR 85	2.95E-36	0.00E-01	0.00E-01	0.00E-01	0.00E-01	0.00E-01	0.00E-01	0.00E-01
RB 86	1.33E+03	5.63E+02	0.00E-01	2.85E+03	0.00E-01	0.00E-01	0.00E-01	0.00E-01
RB 88	5.32E-29	1.39E-39	0.00E-01	1.00E-28	0.00E-01	0.00E-01	0.00E-01	0.00E-01
RB 89	2.69E-29	2.22E-42	0.00E-01	3.83E-29	0.00E-01	0.00E-01	0.00E-01	0.00E-01
SR 89	6.56E+03	3.67E+04	2.29E+05	0.00E-01	0.00E-01	0.00E-01	0.00E-01	0.00E-01
SR 90	5.06E+05	6.33E+05	2.52E+07	0.00E-01	0.00E-01	0.00E-01	0.00E-01	0.00E-01
SR 91	1.13E-25	1.33E-23	2.79E-24	0.00E-01	0.00E-01	0.00E-01	0.00E-01	0.00E-01
SR 92	1.11E-26	5.09E-24	2.57E-25	0.00E-01	0.00E-01	0.00E-01	0.00E-01	0.00E-01
Y 90	1.58E-08	6.26E-03	5.90E-07	0.00E-01	0.00E-01	0.00E-01	0.00E-01	0.00E-01
Y 91M	7.18E-32	5.44E-30	1.85E-30	0.00E-01	0.00E-01	0.00E-01	0.00E-01	0.00E-01
Y 91	3.20E+00	6.59E+04	1.20E+02	0.00E-01	0.00E-01	0.00E-01	0.00E-01	0.00E-01
Y 92	4.09E-30	2.45E-24	1.40E-28	0.00E-01	0.00E-01	0.00E-01	0.00E-01	0.00E-01
Y 93	3.87E-29	4.44E-23	1.40E-27	0.00E-01	0.00E-01	0.00E-01	0.00E-01	0.00E-01
ZR 95	6.05E+00	2.83E+04	2.79E+01	8.94E+00	1.40E+01	0.00E-01	0.00E-01	0.00E-01
ZR 97	3.38E-28	2.29E-22	3.66E-27	7.38E-28	1.12E-27	0.00E-01	0.00E-01	0.00E-01
NB 95	8.82E-01	9.95E+03	2.95E+00	1.64E+00	1.62E+00	0.00E-01	0.00E-01	0.00E-01
MO 99	7.80E-05	9.51E-04	0.00E-01	4.10E-04	9.29E-04	0.00E-01	0.00E-01	0.00E-01
TC 99M	2.69E-27	1.25E-25	7.46E-29	2.11E-28	3.20E-27	0.00E-01	1.03E-28	0.00E-01
TC101	2.60E-30	7.96E-43	1.84E-31	2.65E-31	4.77E-30	0.00E-01	1.35E-31	0.00E-01

DOSE TRANSFER FACTORS FOR RADIONUCLIDES IN EFFLUENT WATER

AGE = ADULT
PATHWAY = IRRIGATED STORED FRUIT, VEGETABLES, GRAIN

	TOTAL BODY	GI-LLI	BONE	LIVER	KIDNEY	THYROID	LUNG	SKIN
				(mrem gal)/(Ci min)				
RU103	4.41E+01	1.19E+04	1.02E+02	0.00E-01	3.90E+02	0.00E-01	0.00E-01	0.00E-01
RU105	1.30E-27	2.02E-24	3.30E-27	0.00E-01	4.27E-26	0.00E-01	0.00E-01	0.00E-01
RU106	6.35E+02	3.25E+05	5.02E+03	0.00E-01	9.69E+03	0.00E-01	0.00E-01	0.00E-01
AG110M	1.52E+02	1.04E+05	2.76E+02	2.55E+02	5.02E+02	0.00E-01	0.00E-01	0.00E-01
TE125M	3.20E+02	9.53E+03	2.39E+03	8.65E+02	9.71E+03	7.18E+02	0.00E-01	0.00E-01
TE127M	1.16E+03	3.19E+04	9.52E+03	3.40E+03	3.87E+04	2.43E+03	0.00E-01	0.00E-01
TE127	1.16E-26	4.24E-24	5.37E-26	1.93E-26	2.19E-25	3.98E-26	0.00E-01	0.00E-01
TE129M	8.34E+02	2.65E+04	5.27E+03	1.97E+03	2.20E+04	1.81E+03	0.00E-01	0.00E-01
TE129	2.81E-28	8.72E-28	1.16E-27	4.34E-28	4.86E-27	8.86E-28	0.00E-01	0.00E-01
TE131M	4.41E-13	5.25E-11	1.08E-12	5.29E-13	5.36E-12	8.38E-13	0.00E-01	0.00E-01
TE131	2.86E-29	1.28E-29	9.04E-29	3.78E-29	3.96E-28	7.44E-29	0.00E-01	0.00E-01
TE132	1.84E-03	9.30E-02	3.04E-03	1.97E-03	1.89E-02	2.17E-03	0.00E-01	0.00E-01
I 130	5.67E-25	1.24E-24	4.87E-25	1.44E-24	2.24E-24	1.22E-22	0.00E-01	0.00E-01
I 131	1.54E+01	7.10E+00	1.88E+01	2.69E+01	4.61E+01	8.81E+03	0.00E-01	0.00E-01
I 132	1.84E-26	9.87E-27	1.96E-26	5.25E-26	8.37E-26	1.84E-24	0.00E-01	0.00E-01
I 133	1.40E-19	4.11E-19	2.63E-19	4.58E-19	7.99E-19	6.73E-17	0.00E-01	0.00E-01
I 134	2.33E-27	5.68E-30	2.40E-27	6.52E-27	1.04E-26	1.13E-25	0.00E-01	0.00E-01
I 135	1.43E-25	4.37E-25	1.48E-25	3.87E-25	6.20E-25	2.55E-23	0.00E-01	0.00E-01
CS134	2.36E+05	5.05E+03	1.21E+05	2.89E+05	9.34E+04	0.00E-01	3.10E+04	0.00E-01
CS136	8.20E+02	1.29E+02	2.88E+02	1.14E+03	6.34E+02	0.00E-01	8.68E+01	0.00E-01
CS137	1.51E+05	4.46E+03	1.69E+05	2.30E+05	7.82E+04	0.00E-01	2.60E+04	0.00E-01
CS138	4.57E-28	3.94E-33	4.67E-28	9.23E-28	6.78E-28	0.00E-01	6.70E-29	0.00E-01
BA139	1.35E-28	8.14E-27	4.59E-27	3.27E-30	3.06E-30	0.00E-01	1.86E-30	0.00E-01
BA140	5.38E+01	1.69E+03	8.22E+02	1.03E+00	3.51E-01	0.00E-01	5.91E-01	0.00E-01
BA141	2.85E-30	3.98E-38	8.43E-29	6.37E-32	5.93E-32	0.00E-01	3.62E-32	0.00E-01
BA142	2.80E-31	0.00E-01	4.45E-30	4.58E-33	3.87E-33	0.00E-01	2.59E-33	0.00E-01
LA140	1.33E-12	3.70E-07	1.00E-11	5.04E-12	0.00E-01	0.00E-01	0.00E-01	0.00E-01
LA142	8.11E-31	2.38E-26	7.16E-30	3.26E-30	0.00E-01	0.00E-01	0.00E-01	0.00E-01
CE141	3.02E-01	1.02E+04	3.93E+00	2.66E+00	1.24E+00	0.00E-01	0.00E-01	0.00E-01
CE143	2.16E-15	7.31E-10	2.65E-14	1.96E-11	8.61E-15	0.00E-01	0.00E-01	0.00E-01
CE144	4.53E+01	2.85E+05	8.44E+02	3.53E+02	2.09E+02	0.00E-01	0.00E-01	0.00E-01
PR143	2.31E-02	2.04E+03	4.65E-01	1.87E-01	1.08E-01	0.00E-01	0.00E-01	0.00E-01
PR144	2.27E-33	6.41E-39	4.46E-32	1.85E-32	1.04E-32	0.00E-01	0.00E-01	0.00E-01
ND147	9.92E-03	7.95E+02	1.43E-01	1.66E-01	9.69E-02	0.00E-01	0.00E-01	0.00E-01
W 187	3.21E-18	3.01E-15	1.10E-17	9.18E-18	0.00E-01	0.00E-01	0.00E-01	0.00E-01
NP239	4.47E-10	1.66E-04	8.25E-09	8.11E-10	2.53E-09	0.00E-01	0.00E-01	0.00E-01

DOSE TRANSFER FACTORS FOR RADIONUCLIDES IN EFFLUENT WATER

AGE = ADULT
PATHWAY = IRRIGATED FRESH FORAGE--MILK

	TOTAL BODY	GI-LLI	BONE	LIVER	KIDNEY	THYROID	LUNG	SKIN
				(mrem gal)/(Ci min)				
H 3	4.24E+00	4.24E+00	0.00E-01	4.24E+00	4.24E+00	4.24E+00	4.24E+00	0.00E-01
C 14	6.45E+03	6.45E+03	3.23E+04	6.45E+03	6.45E+03	6.45E+03	6.45E+03	0.00E-01
NA 24	5.70E+01	5.70E+01	5.70E+01	5.70E+01	5.70E+01	5.70E+01	5.70E+01	0.00E-01
P 32	1.52E+04	4.43E+04	3.94E+05	2.45E+04	0.00E-01	0.00E-01	0.00E-01	0.00E-01
CR 51	6.17E-01	1.55E+02	0.00E-01	0.00E-01	1.36E-01	3.69E-01	8.18E-01	0.00E-01
MN 54	3.07E+01	4.93E+02	0.00E-01	1.61E+02	4.79E+01	0.00E-01	0.00E-01	0.00E-01
MN 56	1.30E-08	2.34E-06	0.00E-01	7.32E-08	9.30E-08	0.00E-01	0.00E-01	0.00E-01
FE 55	7.62E+01	1.87E+02	4.73E+02	3.27E+02	0.00E-01	0.00E-01	1.82E+02	0.00E-01
FE 59	5.55E+02	4.83E+03	6.16E+02	1.45E+03	0.00E-01	0.00E-01	4.05E+02	0.00E-01
CO 58	2.13E+02	1.92E+03	0.00E-01	9.48E+01	0.00E-01	0.00E-01	0.00E-01	0.00E-01
CO 60	6.82E+02	5.81E+03	0.00E-01	3.09E+02	0.00E-01	0.00E-01	0.00E-01	0.00E-01
NI 63	4.30E+03	1.85E+03	1.28E+05	8.89E+03	0.00E-01	0.00E-01	0.00E-01	0.00E-01
NI 65	4.10E-07	2.28E-05	6.91E-06	8.98E-07	0.00E-01	0.00E-01	0.00E-01	0.00E-01
CU 64	2.55E-01	4.63E+01	0.00E-01	5.43E-01	1.37E+00	0.00E-01	0.00E-01	0.00E-01
ZN 65	3.88E+04	5.41E+04	2.70E+04	8.59E+04	5.74E+04	0.00E-01	0.00E-01	0.00E-01
ZN 69	7.91E-18	1.71E-17	5.94E-17	1.14E-16	7.39E-17	0.00E-01	0.00E-01	0.00E-01
BR 83	1.81E-06	2.61E-06	0.00E-01	0.00E-01	0.00E-01	0.00E-01	0.00E-01	0.00E-01
BR 84	1.82E-27	1.43E-32	0.00E-01	0.00E-01	0.00E-01	0.00E-01	0.00E-01	0.00E-01
BR 85	1.25E-35	0.00E-01	0.00E-01	0.00E-01	0.00E-01	0.00E-01	0.00E-01	0.00E-01
RB 86	2.71E+04	1.15E+04	0.00E-01	5.81E+04	0.00E-01	0.00E-01	0.00E-01	0.00E-01
RB 88	1.36E-28	3.54E-39	0.00E-01	2.56E-28	0.00E-01	0.00E-01	0.00E-01	0.00E-01
RB 89	6.87E-29	5.68E-42	0.00E-01	9.77E-29	0.00E-01	0.00E-01	0.00E-01	0.00E-01
SR 89	8.69E+02	4.86E+03	3.03E+04	0.00E-01	0.00E-01	0.00E-01	0.00E-01	0.00E-01
SR 90	3.73E+04	4.67E+04	1.86E+06	0.00E-01	0.00E-01	0.00E-01	0.00E-01	0.00E-01
SR 91	2.63E-02	3.10E+00	6.50E-01	0.00E-01	0.00E-01	0.00E-01	0.00E-01	0.00E-01
SR 92	4.06E-07	1.86E-04	9.39E-06	0.00E-01	0.00E-01	0.00E-01	0.00E-01	0.00E-01
Y 90	4.56E-05	1.80E+01	1.70E-03	0.00E-01	0.00E-01	0.00E-01	0.00E-01	0.00E-01
Y 91M	2.28E-26	1.73E-24	5.89E-25	0.00E-01	0.00E-01	0.00E-01	0.00E-01	0.00E-01
Y 91	4.67E-03	9.62E+01	1.75E-01	0.00E-01	0.00E-01	0.00E-01	0.00E-01	0.00E-01
Y 92	3.40E-11	2.04E-05	1.16E-09	0.00E-01	0.00E-01	0.00E-01	0.00E-01	0.00E-01
Y 93	1.39E-07	1.59E-01	5.02E-06	0.00E-01	0.00E-01	0.00E-01	0.00E-01	0.00E-01
ZR 95	4.15E-03	1.94E+01	1.91E-02	6.12E-03	9.61E-03	0.00E-01	0.00E-01	0.00E-01
ZR 97	9.29E-07	6.29E-01	1.01E-05	2.03E-06	3.07E-06	0.00E-01	0.00E-01	0.00E-01
NB 95	5.23E-01	5.90E+03	1.75E+00	9.72E-01	9.61E-01	0.00E-01	0.00E-01	0.00E-01
MO 99	1.13E+02	1.37E+03	0.00E-01	5.93E+02	1.34E+03	0.00E-01	0.00E-01	0.00E-01
TC 99M	2.59E-03	1.20E-01	7.19E-05	2.03E-04	3.08E-03	0.00E-01	9.95E-05	0.00E-01
TC101	5.52E-30	1.69E-42	3.91E-31	5.63E-31	1.01E-29	0.00E-01	2.88E-31	0.00E-01

DOSE TRANSFER FACTORS FOR RADIONUCLIDES IN EFFLUENT WATER

AGE = ADULT
PATHWAY = IRRIGATED FRESH FORAGE--MILK

	TOTAL BODY	GI-LLI	BONE	LIVER	KIDNEY	THYROID	LUNG	SKIN
				(mrem gal)/(Ci min)				
RU103	9.19E-03	2.49E+00	2.13E-02	0.00E-01	8.15E-02	0.00E-01	0.00E-01	0.00E-01
RU105	7.01E-09	1.09E-05	1.78E-08	0.00E-01	2.30E-07	0.00E-01	0.00E-01	0.00E-01
RU106	4.93E-02	2.52E+01	3.90E-01	0.00E-01	7.53E-01	0.00E-01	0.00E-01	0.00E-01
AG110M	6.19E+02	4.25E+05	1.13E+03	1.04E+03	2.05E+03	0.00E-01	0.00E-01	0.00E-01
TE125M	4.55E+01	1.35E+03	3.39E+02	1.23E+02	1.38E+03	1.02E+02	0.00E-01	0.00E-01
TE127M	1.14E+02	3.14E+03	9.37E+02	3.35E+02	3.80E+03	2.39E+02	0.00E-01	0.00E-01
TE127	3.19E-03	1.16E+00	1.48E-02	5.30E-03	6.01E-02	1.09E-02	0.00E-01	0.00E-01
TE129M	2.05E+02	6.53E+03	1.30E+03	4.84E+02	5.41E+03	4.45E+02	0.00E-01	0.00E-01
TE129	9.47E-16	2.94E-15	3.89E-15	1.46E-15	1.63E-14	2.99E-15	0.00E-01	0.00E-01
TE131M	3.50E+00	4.16E+02	8.58E+00	4.20E+00	4.25E+01	6.64E+00	0.00E-01	0.00E-01
TE131	2.41E-30	1.08E-30	7.65E-30	3.20E-30	3.35E-29	6.29E-30	0.00E-01	0.00E-01
TE132	3.52E+01	1.77E+03	5.79E+01	3.75E+01	3.61E+02	4.14E+01	0.00E-01	0.00E-01
I 130	2.23E+00	4.87E+00	1.92E+00	5.66E+00	8.83E+00	4.79E+02	0.00E-01	0.00E-01
I 131	1.15E+03	5.30E+02	1.40E+03	2.01E+03	3.44E+03	6.58E+05	0.00E-01	0.00E-01
I 132	5.61E-07	3.01E-07	6.00E-07	1.60E-06	2.56E-06	5.61E-05	0.00E-01	0.00E-01
I 133	9.64E+00	2.84E+01	1.82E+01	3.16E+01	5.52E+01	4.65E+03	0.00E-01	0.00E-01
I 134	4.20E-18	1.02E-20	4.32E-18	1.17E-17	1.87E-17	2.04E-16	0.00E-01	0.00E-01
I 135	5.36E-02	1.64E-01	5.54E-02	1.45E-01	2.33E-01	9.57E+00	0.00E-01	0.00E-01
CS134	2.08E+05	4.45E+03	1.07E+05	2.54E+05	8.23E+04	0.00E-01	2.73E+04	0.00E-01
CS136	1.72E+04	2.71E+03	6.05E+03	2.39E+04	1.33E+04	0.00E-01	1.82E+03	0.00E-01
CS137	1.25E+05	3.69E+03	1.39E+05	1.91E+05	6.47E+04	0.00E-01	2.15E+04	0.00E-01
CS138	4.67E-28	4.02E-33	4.78E-28	9.43E-28	6.93E-28	0.00E-01	6.85E-29	0.00E-01
BA139	1.63E-14	9.87E-13	5.57E-13	3.97E-16	3.71E-16	0.00E-01	2.25E-16	0.00E-01
BA140	4.06E+01	1.28E+03	6.20E+02	7.79E-01	2.65E-01	0.00E-01	4.46E-01	0.00E-01
BA141	9.70E-32	1.35E-39	2.87E-30	2.17E-33	2.02E-33	0.00E-01	1.23E-33	0.00E-01
BA142	9.54E-33	0.00E-01	1.52E-31	1.56E-34	1.32E-34	0.00E-01	8.82E-35	0.00E-01
LA140	1.43E-05	3.98E+00	1.08E-04	5.43E-05	0.00E-01	0.00E-01	0.00E-01	0.00E-01
LA142	1.64E-17	4.81E-13	1.45E-16	6.59E-17	0.00E-01	0.00E-01	0.00E-01	0.00E-01
CE141	7.91E-03	2.67E+02	1.03E-01	6.98E-02	3.24E-02	0.00E-01	0.00E-01	0.00E-01
CE143	8.13E-05	2.75E+01	9.94E-04	7.35E-01	3.23E-04	0.00E-01	0.00E-01	0.00E-01
CE144	3.67E-01	2.31E+03	6.84E+00	2.86E+00	1.70E+00	0.00E-01	0.00E-01	0.00E-01
PR143	1.80E-04	1.59E+01	3.63E-03	1.46E-03	8.41E-04	0.00E-01	0.00E-01	0.00E-01
PR144	9.64E-37	2.73E-42	1.90E-35	7.88E-36	4.44E-36	0.00E-01	0.00E-01	0.00E-01
ND147	1.53E-04	1.23E+01	2.21E-03	2.55E-03	1.49E-03	0.00E-01	0.00E-01	0.00E-01
W 187	4.52E-02	4.24E+01	1.55E-01	1.29E-01	0.00E-01	0.00E-01	0.00E-01	0.00E-01
NP239	4.77E-06	1.78E+00	8.81E-05	8.66E-06	2.70E-05	0.00E-01	0.00E-01	0.00E-01

DOSE TRANSFER FACTORS FOR RADIONUCLIDES IN EFFLUENT WATER

AGE = ADULT
PATHWAY = IRRIGATED FRESH FORAGE--MEAT

	TOTAL BODY	GI-LLI	BONE	LIVER	KIDNEY	THYROID	LUNG	SKIN
				(mrem gal)/(Ci min)				
H 3	1.65E+00	1.65E+00	0.00E-01	1.65E+00	1.65E+00	1.65E+00	1.65E+00	0.00E-01
C 14	5.91E+03	5.91E+03	2.96E+04	5.91E+03	5.91E+03	5.91E+03	5.91E+03	0.00E-01
NA 24	3.43E-08	3.43E-08	3.43E-08	3.43E-08	3.43E-08	3.43E-08	3.43E-08	0.00E-01
P 32	4.15E+03	1.21E+04	1.07E+05	6.68E+03	0.00E-01	0.00E-01	0.00E-01	0.00E-01
CR 51	1.52E-01	3.82E+01	0.00E-01	0.00E-01	3.35E-02	9.09E-02	2.02E-01	0.00E-01
MN 54	3.35E+01	5.38E+02	0.00E-01	1.75E+02	5.22E+01	0.00E-01	0.00E-01	0.00E-01
MN 56	5.49E-29	9.88E-27	0.00E-01	3.09E-28	3.93E-28	0.00E-01	0.00E-01	0.00E-01
FE 55	8.90E+02	2.19E+03	5.52E+03	3.82E+03	0.00E-01	0.00E-01	2.13E+03	0.00E-01
FE 59	4.96E+03	4.31E+04	5.51E+03	1.29E+04	0.00E-01	0.00E-01	3.62E+03	0.00E-01
CO 58	8.23E+02	7.44E+03	0.00E-01	3.67E+02	0.00E-01	0.00E-01	0.00E-01	0.00E-01
CO 60	3.13E+03	2.66E+04	0.00E-01	1.42E+03	0.00E-01	0.00E-01	0.00E-01	0.00E-01
NI 63	1.21E+04	5.20E+03	3.60E+05	2.49E+04	0.00E-01	0.00E-01	0.00E-01	0.00E-01
NI 65	5.45E-27	3.03E-25	9.20E-26	1.20E-26	0.00E-01	0.00E-01	0.00E-01	0.00E-01
CU 64	2.80E-12	5.08E-10	0.00E-01	5.96E-12	1.50E-11	0.00E-01	0.00E-01	0.00E-01
ZN 65	1.01E+04	1.40E+04	7.00E+03	2.23E+04	1.49E+04	0.00E-01	0.00E-01	0.00E-01
ZN 69	3.24E-29	7.00E-29	2.44E-28	4.66E-28	3.03E-28	0.00E-01	0.00E-01	0.00E-01
BR 83	3.22E-27	4.64E-27	0.00E-01	0.00E-01	0.00E-01	0.00E-01	0.00E-01	0.00E-01
BR 84	3.37E-28	2.64E-33	0.00E-01	0.00E-01	0.00E-01	0.00E-01	0.00E-01	0.00E-01
BR 85	2.30E-36	0.00E-01	0.00E-01	0.00E-01	0.00E-01	0.00E-01	0.00E-01	0.00E-01
RB 86	5.10E+03	2.16E+03	0.00E-01	1.09E+04	0.00E-01	0.00E-01	0.00E-01	0.00E-01
RB 88	4.98E-29	1.30E-39	0.00E-01	9.39E-29	0.00E-01	0.00E-01	0.00E-01	0.00E-01
RB 89	2.52E-29	2.08E-42	0.00E-01	3.58E-29	0.00E-01	0.00E-01	0.00E-01	0.00E-01
SR 89	1.81E+02	1.01E+03	6.29E+03	0.00E-01	0.00E-01	0.00E-01	0.00E-01	0.00E-01
SR 90	9.93E+03	1.24E+04	4.94E+05	0.00E-01	0.00E-01	0.00E-01	0.00E-01	0.00E-01
SR 91	1.36E-16	1.60E-14	3.37E-15	0.00E-01	0.00E-01	0.00E-01	0.00E-01	0.00E-01
SR 92	2.02E-28	9.24E-26	4.66E-27	0.00E-01	0.00E-01	0.00E-01	0.00E-01	0.00E-01
Y 90	7.00E-05	2.77E+01	2.61E-03	0.00E-01	0.00E-01	0.00E-01	0.00E-01	0.00E-01
Y 91M	9.98E-33	7.57E-31	2.58E-31	0.00E-01	0.00E-01	0.00E-01	0.00E-01	0.00E-01
Y 91	6.16E-01	1.27E+04	2.30E+01	0.00E-01	0.00E-01	0.00E-01	0.00E-01	0.00E-01
Y 92	5.68E-31	3.41E-25	1.94E-29	0.00E-01	0.00E-01	0.00E-01	0.00E-01	0.00E-01
Y 93	2.85E-18	3.27E-12	1.03E-16	0.00E-01	0.00E-01	0.00E-01	0.00E-01	0.00E-01
ZR 95	8.23E+00	3.85E+04	3.79E+01	1.22E+01	1.91E+01	0.00E-01	0.00E-01	0.00E-01
ZR 97	4.47E-11	3.03E-05	4.85E-10	9.78E-11	1.48E-10	0.00E-01	0.00E-01	0.00E-01
NB 95	1.46E+01	1.64E+05	4.87E+01	2.71E+01	2.68E+01	0.00E-01	0.00E-01	0.00E-01
MO 99	4.55E-01	5.54E+00	0.00E-01	2.39E+00	5.42E+00	0.00E-01	0.00E-01	0.00E-01
TC 99M	3.58E-24	1.66E-22	9.94E-26	2.81E-25	4.27E-24	0.00E-01	1.38E-25	0.00E-01
TC101	3.13E-29	9.61E-42	2.22E-30	3.20E-30	5.76E-29	0.00E-01	1.63E-30	0.00E-01

DOSE TRANSFER FACTORS FOR RADIONUCLIDES IN EFFLUENT WATER

AGE = ADULT
PATHWAY = IRRIGATED FRESH FORAGE--MEAT

	TOTAL BODY	GI-LLI	BONE	LIVER	KIDNEY	THYROID	LUNG	SKIN
				(mrem gal)/(Ci min)				
RU103	9.50E+02	2.58E+05	2.21E+03	0.00E-01	8.42E+03	0.00E-01	0.00E-01	0.00E-01
RU105	1.57E-26	2.44E-23	3.99E-26	0.00E-01	5.16E-25	0.00E-01	0.00E-01	0.00E-01
RU106	6.77E+03	3.46E+06	5.35E+04	0.00E-01	1.03E+05	0.00E-01	0.00E-01	0.00E-01
AG110M	7.11E+01	4.88E+04	1.29E+02	1.20E+02	2.35E+02	0.00E-01	0.00E-01	0.00E-01
TE125M	1.00E+03	2.99E+04	7.48E+03	2.71E+03	3.04E+04	2.25E+03	0.00E-01	0.00E-01
TE127M	2.78E+03	7.65E+04	2.28E+04	8.16E+03	9.27E+04	5.83E+03	0.00E-01	0.00E-01
TE127	1.07E-15	3.88E-13	4.92E-15	1.77E-15	2.01E-14	3.65E-15	0.00E-01	0.00E-01
TE129M	3.86E+03	1.23E+05	2.44E+04	9.11E+03	1.02E+05	8.39E+03	0.00E-01	0.00E-01
TE129	6.50E-28	2.01E-27	2.67E-27	1.00E-27	1.12E-26	2.05E-27	0.00E-01	0.00E-01
TE131M	4.40E-03	5.25E-01	1.08E-02	5.28E-03	5.35E-02	8.37E-03	0.00E-01	0.00E-01
TE131	6.60E-29	2.96E-29	2.09E-28	8.73E-29	9.15E-28	1.72E-28	0.00E-01	0.00E-01
TE132	2.10E+01	1.06E+03	3.45E+01	2.23E+01	2.15E+02	2.46E+01	0.00E-01	0.00E-01
I 130	1.11E-11	2.43E-11	9.56E-12	2.82E-11	4.40E-11	2.39E-09	0.00E-01	0.00E-01
I 131	4.18E+01	1.92E+01	5.10E+01	7.29E+01	1.25E+02	2.39E+04	0.00E-01	0.00E-01
I 132	1.61E-27	8.65E-28	1.72E-27	4.60E-27	7.33E-27	1.61E-25	0.00E-01	0.00E-01
I 133	9.35E-07	2.76E-06	1.76E-06	3.07E-06	5.35E-06	4.51E-04	0.00E-01	0.00E-01
I 134	2.04E-28	4.98E-31	2.10E-28	5.71E-28	9.08E-28	9.89E-27	0.00E-01	0.00E-01
I 135	1.74E-22	5.33E-22	1.80E-22	4.72E-22	7.57E-22	3.11E-20	0.00E-01	0.00E-01
CS134	2.42E+04	5.18E+02	1.24E+04	2.96E+04	9.57E+03	0.00E-01	3.18E+03	0.00E-01
CS136	7.85E+02	1.24E+02	2.76E+02	1.09E+03	6.07E+02	0.00E-01	8.32E+01	0.00E-01
CS137	1.48E+04	4.36E+02	1.65E+04	2.25E+04	7.65E+03	0.00E-01	2.54E+03	0.00E-01
CS138	5.53E-29	4.76E-34	5.65E-29	1.12E-28	8.20E-29	0.00E-01	8.10E-30	0.00E-01
BA139	1.30E-29	7.88E-28	4.44E-28	3.16E-31	2.96E-31	0.00E-01	1.79E-31	0.00E-01
BA140	4.35E+01	1.37E+03	6.64E+02	8.34E-01	2.84E-01	0.00E-01	4.78E-01	0.00E-01
BA141	2.75E-31	3.84E-39	8.15E-30	6.16E-33	5.73E-33	0.00E-01	3.50E-33	0.00E-01
BA142	2.71E-32	0.00E-01	4.30E-31	4.42E-34	3.74E-34	0.00E-01	2.51E-34	0.00E-01
LA140	1.20E-07	3.34E-02	9.03E-07	4.55E-07	0.00E-01	0.00E-01	0.00E-01	0.00E-01
LA142	4.90E-33	1.44E-28	4.33E-32	1.97E-32	0.00E-01	0.00E-01	0.00E-01	0.00E-01
CE141	2.29E-02	7.73E+02	2.99E-01	2.02E-01	9.40E-02	0.00E-01	0.00E-01	0.00E-01
CE143	4.12E-08	1.39E-02	5.04E-07	3.73E-04	1.64E-07	0.00E-01	0.00E-01	0.00E-01
CE144	1.50E+00	9.42E+03	2.79E+01	1.16E+01	6.91E+00	0.00E-01	0.00E-01	0.00E-01
PR143	2.40E-02	2.12E+03	4.84E-01	1.94E-01	1.12E-01	0.00E-01	0.00E-01	0.00E-01
PR144	3.22E-34	9.11E-40	6.33E-33	2.63E-33	1.48E-33	0.00E-01	0.00E-01	0.00E-01
ND147	1.16E-02	9.33E+02	1.68E-01	1.94E-01	1.14E-01	0.00E-01	0.00E-01	0.00E-01
W 187	1.52E-07	1.43E-04	5.22E-07	4.36E-07	0.00E-01	0.00E-01	0.00E-01	0.00E-01
NP239	3.42E-07	1.27E-01	6.32E-06	6.21E-07	1.94E-06	0.00E-01	0.00E-01	0.00E-01

DOSE TRANSFER FACTORS FOR RADIONUCLIDES IN EFFLUENT WATER

AGE = ADULT
PATHWAY = IRRIGATED STORED FEED--MILK

	TOTAL BODY	GI-LLI	BONE	LIVER	KIDNEY	THYROID	LUNG	SKIN
				(mrem gal)/(Ci min)				
H 3	4.24E+00	4.24E+00	0.00E-01	4.24E+00	4.24E+00	4.24E+00	4.24E+00	0.00E-01
C 14	6.67E+03	6.67E+03	3.34E+04	6.67E+03	6.67E+03	6.67E+03	6.67E+03	0.00E-01
NA 24	5.70E+01	5.70E+01	5.70E+01	5.70E+01	5.70E+01	5.70E+01	5.70E+01	0.00E-01
P 32	1.60E+04	4.66E+04	4.14E+05	2.58E+04	0.00E-01	0.00E-01	0.00E-01	0.00E-01
CR 51	6.83E-01	1.72E+02	0.00E-01	0.00E-01	1.50E-01	4.08E-01	9.06E-01	0.00E-01
MN 54	3.72E+01	5.97E+02	0.00E-01	1.95E+02	5.80E+01	0.00E-01	0.00E-01	0.00E-01
MN 56	1.30E-08	2.34E-06	0.00E-01	7.32E-08	9.30E-08	0.00E-01	0.00E-01	0.00E-01
FE 55	9.31E+01	2.29E+02	5.78E+02	3.99E+02	0.00E-01	0.00E-01	2.23E+02	0.00E-01
FE 59	6.34E+02	5.51E+03	7.04E+02	1.65E+03	0.00E-01	0.00E-01	4.62E+02	0.00E-01
CO 58	2.48E+02	2.25E+03	0.00E-01	1.11E+02	0.00E-01	0.00E-01	0.00E-01	0.00E-01
CO 60	8.35E+02	7.11E+03	0.00E-01	3.78E+02	0.00E-01	0.00E-01	0.00E-01	0.00E-01
NI 63	5.26E+03	2.27E+03	1.57E+05	1.09E+04	0.00E-01	0.00E-01	0.00E-01	0.00E-01
NI 65	4.10E-07	2.28E-05	6.91E-06	8.98E-07	0.00E-01	0.00E-01	0.00E-01	0.00E-01
CU 64	2.55E-01	4.63E+01	0.00E-01	5.43E-01	1.37E+00	0.00E-01	0.00E-01	0.00E-01
ZN 65	4.67E+04	6.51E+04	3.25E+04	1.03E+05	6.91E+04	0.00E-01	0.00E-01	0.00E-01
ZN 69	7.91E-18	1.71E-17	5.94E-17	1.14E-16	7.39E-17	0.00E-01	0.00E-01	0.00E-01
BR 83	1.81E-06	2.61E-06	0.00E-01	0.00E-01	0.00E-01	0.00E-01	0.00E-01	0.00E-01
BR 84	1.82E-27	1.43E-32	0.00E-01	0.00E-01	0.00E-01	0.00E-01	0.00E-01	0.00E-01
BR 85	1.25E-35	0.00E-01	0.00E-01	0.00E-01	0.00E-01	0.00E-01	0.00E-01	0.00E-01
RB 86	2.91E+04	1.23E+04	0.00E-01	6.25E+04	0.00E-01	0.00E-01	0.00E-01	0.00E-01
RB 88	1.36E-28	3.54E-39	0.00E-01	2.56E-28	0.00E-01	0.00E-01	0.00E-01	0.00E-01
RB 89	6.87E-29	5.68E-42	0.00E-01	9.77E-29	0.00E-01	0.00E-01	0.00E-01	0.00E-01
SR 89	9.97E+02	5.57E+03	3.48E+04	0.00E-01	0.00E-01	0.00E-01	0.00E-01	0.00E-01
SR 90	4.19E+04	5.25E+04	2.09E+06	0.00E-01	0.00E-01	0.00E-01	0.00E-01	0.00E-01
SR 91	2.63E-02	3.10E+00	6.50E-01	0.00E-01	0.00E-01	0.00E-01	0.00E-01	0.00E-01
SR 92	4.06E-07	1.86E-04	9.39E-06	0.00E-01	0.00E-01	0.00E-01	0.00E-01	0.00E-01
Y 90	4.56E-05	1.80E+01	1.70E-03	0.00E-01	0.00E-01	0.00E-01	0.00E-01	0.00E-01
Y 91M	2.28E-26	1.73E-24	5.89E-25	0.00E-01	0.00E-01	0.00E-01	0.00E-01	0.00E-01
Y 91	5.42E-03	1.11E+02	2.03E-01	0.00E-01	0.00E-01	0.00E-01	0.00E-01	0.00E-01
Y 92	3.40E-11	2.04E-05	1.16E-09	0.00E-01	0.00E-01	0.00E-01	0.00E-01	0.00E-01
Y 93	1.39E-07	1.59E-01	5.02E-06	0.00E-01	0.00E-01	0.00E-01	0.00E-01	0.00E-01
ZR 95	4.82E-03	2.26E+01	2.22E-02	7.13E-03	1.12E-02	0.00E-01	0.00E-01	0.00E-01
ZR 97	9.29E-07	6.29E-01	1.01E-05	2.03E-06	3.07E-06	0.00E-01	0.00E-01	0.00E-01
NB 95	5.88E-01	6.64E+03	1.97E+00	1.09E+00	1.08E+00	0.00E-01	0.00E-01	0.00E-01
MO 99	1.13E+02	1.37E+03	0.00E-01	5.93E+02	1.34E+03	0.00E-01	0.00E-01	0.00E-01
TC 99M	2.59E-03	1.20E-01	7.19E-05	2.03E-04	3.08E-03	0.00E-01	9.95E-05	0.00E-01
TC101	5.52E-30	1.69E-42	3.91E-31	5.63E-31	1.01E-29	0.00E-01	2.88E-31	0.00E-01

DOSE TRANSFER FACTORS FOR RADIONUCLIDES IN EFFLUENT WATER

AGE = ADULT
PATHWAY = IRRIGATED STORED FEED--MILK

	TOTAL BODY	GI-LLI	BONE	LIVER	KIDNEY	THYROID	LUNG	SKIN
				(mrem gal)/(Ci min)				
RU103	1.04E-02	2.83E+00	2.42E-02	0.00E-01	9.23E-02	0.00E-01	0.00E-01	0.00E-01
RU105	7.01E-09	1.09E-05	1.78E-08	0.00E-01	2.30E-07	0.00E-01	0.00E-01	0.00E-01
RU106	5.98E-02	3.06E+01	4.73E-01	0.00E-01	9.13E-01	0.00E-01	0.00E-01	0.00E-01
AG110M	7.47E+02	5.13E+05	1.36E+03	1.26E+03	2.47E+03	0.00E-01	0.00E-01	0.00E-01
TE125M	5.25E+01	1.56E+03	3.92E+02	1.42E+02	1.59E+03	1.18E+02	0.00E-01	0.00E-01
TE127M	1.35E+02	3.71E+03	1.10E+03	3.95E+02	4.49E+03	2.82E+02	0.00E-01	0.00E-01
TE127	3.19E-03	1.16E+00	1.48E-02	5.30E-03	6.01E-02	1.09E-02	0.00E-01	0.00E-01
TE129M	2.30E+02	7.31E+03	1.45E+03	5.42E+02	6.06E+03	4.99E+02	0.00E-01	0.00E-01
TE129	9.47E-16	2.94E-15	3.89E-15	1.46E-15	1.63E-14	2.99E-15	0.00E-01	0.00E-01
TE131M	3.50E+00	4.16E+02	8.58E+00	4.20E+00	4.25E+01	6.64E+00	0.00E-01	0.00E-01
TE131	2.41E-30	1.08E-30	7.65E-30	3.20E-30	3.35E-29	6.29E-30	0.00E-01	0.00E-01
TE132	3.52E+01	1.77E+03	5.80E+01	3.75E+01	3.61E+02	4.14E+01	0.00E-01	0.00E-01
I 130	2.23E+00	4.87E+00	1.92E+00	5.66E+00	8.83E+00	4.79E+02	0.00E-01	0.00E-01
I 131	1.17E+03	5.39E+02	1.43E+03	2.04E+03	3.50E+03	6.69E+05	0.00E-01	0.00E-01
I 132	5.61E-07	3.01E-07	6.00E-07	1.60E-06	2.56E-06	5.61E-05	0.00E-01	0.00E-01
I 133	9.64E+00	2.84E+01	1.82E+01	3.16E+01	5.52E+01	4.65E+03	0.00E-01	0.00E-01
I 134	4.20E-18	1.02E-20	4.32E-18	1.17E-17	1.87E-17	2.04E-16	0.00E-01	0.00E-01
I 135	5.36E-02	1.64E-01	5.54E-02	1.45E-01	2.33E-01	9.57E+00	0.00E-01	0.00E-01
CS134	2.54E+05	5.43E+03	1.30E+05	3.10E+05	1.00E+05	0.00E-01	3.33E+04	0.00E-01
CS136	1.80E+04	2.84E+03	6.33E+03	2.50E+04	1.39E+04	0.00E-01	1.91E+03	0.00E-01
CS137	1.53E+05	4.52E+03	1.71E+05	2.33E+05	7.92E+04	0.00E-01	2.63E+04	0.00E-01
CS138	4.67E-28	4.02E-33	4.78E-28	9.43E-28	6.93E-28	0.00E-01	6.85E-29	0.00E-01
BA139	1.63E-14	9.87E-13	5.57E-13	3.97E-16	3.71E-16	0.00E-01	2.25E-16	0.00E-01
BA140	4.25E+01	1.33E+03	6.48E+02	8.14E-01	2.77E-01	0.00E-01	4.66E-01	0.00E-01
BA141	9.70E-32	1.35E-39	2.87E-30	2.17E-33	2.02E-33	0.00E-01	1.23E-33	0.00E-01
BA142	9.54E-33	0.00E-01	1.52E-31	1.56E-34	1.32E-34	0.00E-01	8.82E-35	0.00E-01
LA140	1.43E-05	3.98E+00	1.08E-04	5.43E-05	0.00E-01	0.00E-01	0.00E-01	0.00E-01
LA142	1.64E-17	4.81E-13	1.45E-16	6.59E-17	0.00E-01	0.00E-01	0.00E-01	0.00E-01
CE141	8.86E-03	2.98E+02	1.16E-01	7.81E-02	3.63E-02	0.00E-01	0.00E-01	0.00E-01
CE143	8.13E-05	2.75E+01	9.94E-04	7.35E-01	3.23E-04	0.00E-01	0.00E-01	0.00E-01
CE144	4.44E-01	2.80E+03	8.27E+00	3.46E+00	2.05E+00	0.00E-01	0.00E-01	0.00E-01
PR143	1.89E-04	1.67E+01	3.81E-03	1.53E-03	8.82E-04	0.00E-01	0.00E-01	0.00E-01
PR144	9.64E-37	2.73E-42	1.90E-35	7.88E-36	4.44E-36	0.00E-01	0.00E-01	0.00E-01
ND147	1.58E-04	1.27E+01	2.29E-03	2.64E-03	1.55E-03	0.00E-01	0.00E-01	0.00E-01
W 187	4.52E-02	4.24E+01	1.55E-01	1.29E-01	0.00E-01	0.00E-01	0.00E-01	0.00E-01
NP239	4.77E-06	1.78E+00	8.81E-05	8.66E-06	2.70E-05	0.00E-01	0.00E-01	0.00E-01

DOSE TRANSFER FACTORS FOR RADIONUCLIDES IN EFFLUENT WATER

AGE = ADULT
PATHWAY = IRRIGATED STORED FEED--MEAT

	TOTAL BODY	GI-LLI	BONE	LIVER	KIDNEY	THYROID	LUNG	SKIN
				(mrem gal)/(Ci min)				
H 3	1.65E+00	1.65E+00	0.00E-01	1.65E+00	1.65E+00	1.65E+00	1.65E+00	0.00E-01
C 14	6.12E+03	6.12E+03	3.06E+04	6.12E+03	6.12E+03	6.12E+03	6.12E+03	0.00E-01
NA 24	3.43E-08	3.43E-08	3.43E-08	3.43E-08	3.43E-08	3.43E-08	3.43E-08	0.00E-01
P 32	4.37E+03	1.27E+04	1.13E+05	7.03E+03	0.00E-01	0.00E-01	0.00E-01	0.00E-01
CR 51	1.68E-01	4.23E+01	0.00E-01	0.00E-01	3.71E-02	1.01E-01	2.23E-01	0.00E-01
MN 54	4.06E+01	6.51E+02	0.00E-01	2.13E+02	6.33E+01	0.00E-01	0.00E-01	0.00E-01
MN 56	5.49E-29	9.88E-27	0.00E-01	3.09E-28	3.93E-28	0.00E-01	0.00E-01	0.00E-01
FE 55	1.09E+03	2.67E+03	6.75E+03	4.66E+03	0.00E-01	0.00E-01	2.60E+03	0.00E-01
FE 59	5.67E+03	4.93E+04	6.29E+03	1.48E+04	0.00E-01	0.00E-01	4.13E+03	0.00E-01
CO 58	9.62E+02	8.69E+03	0.00E-01	4.29E+02	0.00E-01	0.00E-01	0.00E-01	0.00E-01
CO 60	3.82E+03	3.26E+04	0.00E-01	1.73E+03	0.00E-01	0.00E-01	0.00E-01	0.00E-01
NI 63	1.48E+04	6.36E+03	4.40E+05	3.05E+04	0.00E-01	0.00E-01	0.00E-01	0.00E-01
NI 65	5.45E-27	3.03E-25	9.20E-26	1.20E-26	0.00E-01	0.00E-01	0.00E-01	0.00E-01
CU 64	2.80E-12	5.08E-10	0.00E-01	5.96E-12	1.50E-11	0.00E-01	0.00E-01	0.00E-01
ZN 65	1.21E+04	1.69E+04	8.42E+03	2.68E+04	1.79E+04	0.00E-01	0.00E-01	0.00E-01
ZN 69	3.24E-29	7.00E-29	2.44E-28	4.66E-28	3.03E-28	0.00E-01	0.00E-01	0.00E-01
BR 83	3.22E-27	4.64E-27	0.00E-01	0.00E-01	0.00E-01	0.00E-01	0.00E-01	0.00E-01
BR 84	3.37E-28	2.64E-33	0.00E-01	0.00E-01	0.00E-01	0.00E-01	0.00E-01	0.00E-01
BR 85	2.30E-36	0.00E-01	0.00E-01	0.00E-01	0.00E-01	0.00E-01	0.00E-01	0.00E-01
RB 86	5.48E+03	2.32E+03	0.00E-01	1.18E+04	0.00E-01	0.00E-01	0.00E-01	0.00E-01
RB 88	4.98E-29	1.30E-39	0.00E-01	9.39E-29	0.00E-01	0.00E-01	0.00E-01	0.00E-01
RB 89	2.52E-29	2.08E-42	0.00E-01	3.58E-29	0.00E-01	0.00E-01	0.00E-01	0.00E-01
SR 89	2.07E+02	1.16E+03	7.22E+03	0.00E-01	0.00E-01	0.00E-01	0.00E-01	0.00E-01
SR 90	1.11E+04	1.39E+04	5.55E+05	0.00E-01	0.00E-01	0.00E-01	0.00E-01	0.00E-01
SR 91	1.36E-16	1.60E-14	3.37E-15	0.00E-01	0.00E-01	0.00E-01	0.00E-01	0.00E-01
SR 92	2.02E-28	9.24E-26	4.66E-27	0.00E-01	0.00E-01	0.00E-01	0.00E-01	0.00E-01
Y 90	7.01E-05	2.77E+01	2.61E-03	0.00E-01	0.00E-01	0.00E-01	0.00E-01	0.00E-01
Y 91M	9.98E-33	7.57E-31	2.58E-31	0.00E-01	0.00E-01	0.00E-01	0.00E-01	0.00E-01
Y 91	7.14E-01	1.47E+04	2.67E+01	0.00E-01	0.00E-01	0.00E-01	0.00E-01	0.00E-01
Y 92	5.68E-31	3.41E-25	1.94E-29	0.00E-01	0.00E-01	0.00E-01	0.00E-01	0.00E-01
Y 93	2.85E-18	3.27E-12	1.03E-16	0.00E-01	0.00E-01	0.00E-01	0.00E-01	0.00E-01
ZR 95	9.58E+00	4.49E+04	4.41E+01	1.42E+01	2.22E+01	0.00E-01	0.00E-01	0.00E-01
ZR 97	4.47E-11	3.03E-05	4.85E-10	9.78E-11	1.48E-10	0.00E-01	0.00E-01	0.00E-01
NB 95	1.64E+01	1.85E+05	5.48E+01	3.05E+01	3.02E+01	0.00E-01	0.00E-01	0.00E-01
MO 99	4.55E-01	5.54E+00	0.00E-01	2.39E+00	5.42E+00	0.00E-01	0.00E-01	0.00E-01
TC 99M	3.58E-24	1.66E-22	9.94E-26	2.81E-25	4.27E-24	0.00E-01	1.38E-25	0.00E-01
TC101	3.13E-29	9.61E-42	2.22E-30	3.20E-30	5.76E-29	0.00E-01	1.63E-30	0.00E-01

DOSE TRANSFER FACTORS FOR RADIONUCLIDES IN EFFLUENT WATER

AGE = ADULT
PATHWAY = IRRIGATED STORED FEED--MEAT

	TOTAL BODY	GI-LLI	BONE	LIVER	KIDNEY	THYROID	LUNG	SKIN
				(mrem gal)/(Ci min)				
RU103	1.08E+03	2.92E+05	2.50E+03	0.00E-01	9.54E+03	0.00E-01	0.00E-01	0.00E-01
RU105	1.57E-26	2.44E-23	3.99E-26	0.00E-01	5.16E-25	0.00E-01	0.00E-01	0.00E-01
RU106	8.21E+03	4.20E+06	6.49E+04	0.00E-01	1.25E+05	0.00E-01	0.00E-01	0.00E-01
AG110M	8.57E+01	5.89E+04	1.56E+02	1.44E+02	2.84E+02	0.00E-01	0.00E-01	0.00E-01
TE125M	1.16E+03	3.45E+04	8.64E+03	3.13E+03	3.51E+04	2.60E+03	0.00E-01	0.00E-01
TE127M	3.28E+03	9.03E+04	2.69E+04	9.63E+03	1.09E+05	6.88E+03	0.00E-01	0.00E-01
TE127	1.07E-15	3.88E-13	4.92E-15	1.77E-15	2.01E-14	3.65E-15	0.00E-01	0.00E-01
TE129M	4.33E+03	1.38E+05	2.74E+04	1.02E+04	1.14E+05	9.40E+03	0.00E-01	0.00E-01
TE129	6.50E-28	2.01E-27	2.67E-27	1.00E-27	1.12E-26	2.05E-27	0.00E-01	0.00E-01
TE131M	4.40E-03	5.25E-01	1.08E-02	5.28E-03	5.35E-02	8.37E-03	0.00E-01	0.00E-01
TE131	6.60E-29	2.96E-29	2.09E-28	8.73E-29	9.15E-28	1.72E-28	0.00E-01	0.00E-01
TE132	2.10E+01	1.06E+03	3.45E+01	2.23E+01	2.15E+02	2.47E+01	0.00E-01	0.00E-01
I 130	1.11E-11	2.43E-11	9.56E-12	2.82E-11	4.40E-11	2.39E-09	0.00E-01	0.00E-01
I 131	4.25E+01	1.96E+01	5.19E+01	7.42E+01	1.27E+02	2.43E+04	0.00E-01	0.00E-01
I 132	1.61E-27	8.65E-28	1.72E-27	4.60E-27	7.33E-27	1.61E-25	0.00E-01	0.00E-01
I 133	9.35E-07	2.76E-06	1.76E-06	3.07E-06	5.35E-06	4.51E-04	0.00E-01	0.00E-01
I 134	2.04E-28	4.98E-31	2.10E-28	5.71E-28	9.08E-28	9.89E-27	0.00E-01	0.00E-01
I 135	1.74E-22	5.33E-22	1.80E-22	4.72E-22	7.57E-22	3.11E-20	0.00E-01	0.00E-01
CS134	2.95E+04	6.31E+02	1.52E+04	3.61E+04	1.17E+04	0.00E-01	3.88E+03	0.00E-01
CS136	8.21E+02	1.30E+02	2.89E+02	1.14E+03	6.35E+02	0.00E-01	8.70E+01	0.00E-01
CS137	1.81E+04	5.34E+02	2.02E+04	2.76E+04	9.36E+03	0.00E-01	3.11E+03	0.00E-01
CS138	5.53E-29	4.76E-34	5.65E-29	1.12E-28	8.20E-29	0.00E-01	8.10E-30	0.00E-01
BA139	1.30E-29	7.88E-28	4.44E-28	3.16E-31	2.96E-31	0.00E-01	1.79E-31	0.00E-01
BA140	4.55E+01	1.43E+03	6.94E+02	8.72E-01	2.96E-01	0.00E-01	4.99E-01	0.00E-01
BA141	2.75E-31	3.84E-39	8.15E-30	6.16E-33	5.73E-33	0.00E-01	3.50E-33	0.00E-01
BA142	2.71E-32	0.00E-01	4.30E-31	4.42E-34	3.74E-34	0.00E-01	2.51E-34	0.00E-01
LA140	1.20E-07	3.34E-02	9.03E-07	4.55E-07	0.00E-01	0.00E-01	0.00E-01	0.00E-01
LA142	4.90E-33	1.44E-28	4.33E-32	1.97E-32	0.00E-01	0.00E-01	0.00E-01	0.00E-01
CE141	2.57E-02	8.66E+02	3.35E-01	2.26E-01	1.05E-01	0.00E-01	0.00E-01	0.00E-01
CE143	4.12E-08	1.39E-02	5.04E-07	3.73E-04	1.64E-07	0.00E-01	0.00E-01	0.00E-01
CE144	1.81E+00	1.14E+04	3.37E+01	1.41E+01	8.36E+00	0.00E-01	0.00E-01	0.00E-01
PR143	2.52E-02	2.22E+03	5.08E-01	2.04E-01	1.18E-01	0.00E-01	0.00E-01	0.00E-01
PR144	3.22E-34	9.11E-40	6.33E-33	2.63E-33	1.48E-33	0.00E-01	0.00E-01	0.00E-01
ND147	1.20E-02	9.65E+02	1.74E-01	2.01E-01	1.17E-01	0.00E-01	0.00E-01	0.00E-01
W 187	1.52E-07	1.43E-04	5.22E-07	4.36E-07	0.00E-01	0.00E-01	0.00E-01	0.00E-01
NP239	3.42E-07	1.27E-01	6.32E-06	6.21E-07	1.94E-06	0.00E-01	0.00E-01	0.00E-01

DOSE TRANSFER FACTORS FOR RADIONUCLIDES IN EFFLUENT WATER

AGE = ADULT
PATHWAY = ANIMAL DRINKING WATER--MILK

	TOTAL BODY	GI-LLI	BONE	LIVER	KIDNEY	THYROID	LUNG	SKIN
				(mrem gal)/(Ci min)				
H 3	5.08E+00	5.08E+00	0.00E-01	5.08E+00	5.08E+00	5.08E+00	5.08E+00	0.00E-01
C 14	6.36E+01	6.36E+01	3.18E+02	6.36E+01	6.36E+01	6.36E+01	6.36E+01	0.00E-01
NA 24	6.64E+01	6.64E+01	6.64E+01	6.64E+01	6.64E+01	6.64E+01	6.64E+01	0.00E-01
P 32	1.58E+03	4.59E+03	4.08E+04	2.54E+03	0.00E-01	0.00E-01	0.00E-01	0.00E-01
CR 51	5.19E-02	1.31E+01	0.00E-01	0.00E-01	1.14E-02	3.10E-02	6.89E-02	0.00E-01
MN 54	2.03E+00	3.25E+01	0.00E-01	1.06E+01	3.16E+00	0.00E-01	0.00E-01	0.00E-01
MN 56	8.55E-08	1.54E-05	0.00E-01	4.82E-07	6.12E-07	0.00E-01	0.00E-01	0.00E-01
FE 55	4.95E+00	1.22E+01	3.08E+01	2.12E+01	0.00E-01	0.00E-01	1.19E+01	0.00E-01
FE 59	4.24E+01	3.69E+02	4.71E+01	1.11E+02	0.00E-01	0.00E-01	3.09E+01	0.00E-01
CO 58	1.53E+01	1.38E+02	0.00E-01	6.82E+00	0.00E-01	0.00E-01	0.00E-01	0.00E-01
CO 60	4.40E+01	3.75E+02	0.00E-01	2.00E+01	0.00E-01	0.00E-01	0.00E-01	0.00E-01
NI 63	2.73E+02	1.18E+02	8.13E+03	5.63E+02	0.00E-01	0.00E-01	0.00E-01	0.00E-01
NI 65	2.75E-06	1.53E-04	4.63E-05	6.02E-06	0.00E-01	0.00E-01	0.00E-01	0.00E-01
CU 64	3.50E-01	6.35E+01	0.00E-01	7.45E-01	1.88E+00	0.00E-01	0.00E-01	0.00E-01
ZN 65	2.52E+03	3.51E+03	1.75E+03	5.57E+03	3.73E+03	0.00E-01	0.00E-01	0.00E-01
ZN 69	1.40E-16	3.03E-16	1.05E-15	2.01E-15	1.31E-15	0.00E-01	0.00E-01	0.00E-01
BR 83	1.28E-05	1.84E-05	0.00E-01	0.00E-01	0.00E-01	0.00E-01	0.00E-01	0.00E-01
BR 84	5.76E-26	4.52E-31	0.00E-01	0.00E-01	0.00E-01	0.00E-01	0.00E-01	0.00E-01
BR 85	4.38E-33	0.00E-01	0.00E-01	0.00E-01	0.00E-01	0.00E-01	0.00E-01	0.00E-01
RB 86	2.55E+03	1.08E+03	0.00E-01	5.48E+03	0.00E-01	0.00E-01	0.00E-01	0.00E-01
RB 88	7.66E-27	2.00E-37	0.00E-01	1.44E-26	0.00E-01	0.00E-01	0.00E-01	0.00E-01
RB 89	4.53E-27	3.74E-40	0.00E-01	6.44E-27	0.00E-01	0.00E-01	0.00E-01	0.00E-01
SR 89	6.42E+01	3.59E+02	2.24E+03	0.00E-01	0.00E-01	0.00E-01	0.00E-01	0.00E-01
SR 90	1.31E+03	1.63E+03	6.50E+04	0.00E-01	0.00E-01	0.00E-01	0.00E-01	0.00E-01
SR 91	4.76E-02	5.61E+00	1.18E+00	0.00E-01	0.00E-01	0.00E-01	0.00E-01	0.00E-01
SR 92	2.52E-06	1.16E-03	5.84E-05	0.00E-01	0.00E-01	0.00E-01	0.00E-01	0.00E-01
Y 90	1.42E-05	5.61E+00	5.29E-04	0.00E-01	0.00E-01	0.00E-01	0.00E-01	0.00E-01
Y 91M	4.64E-25	3.52E-23	1.20E-23	0.00E-01	0.00E-01	0.00E-01	0.00E-01	0.00E-01
Y 91	3.43E-04	7.07E+00	1.28E-02	0.00E-01	0.00E-01	0.00E-01	0.00E-01	0.00E-01
Y 92	1.62E-10	9.73E-05	5.56E-09	0.00E-01	0.00E-01	0.00E-01	0.00E-01	0.00E-01
Y 93	2.38E-07	2.73E-01	8.61E-06	0.00E-01	0.00E-01	0.00E-01	0.00E-01	0.00E-01
ZR 95	3.01E-04	1.41E+00	1.39E-03	4.45E-04	6.98E-04	0.00E-01	0.00E-01	0.00E-01
ZR 97	9.68E-07	6.56E-01	1.05E-05	2.12E-06	3.20E-06	0.00E-01	0.00E-01	0.00E-01
NB 95	4.17E-02	4.71E+02	1.39E-01	7.76E-02	7.67E-02	0.00E-01	0.00E-01	0.00E-01
MO 99	3.43E+01	4.18E+02	0.00E-01	1.80E+02	4.08E+02	0.00E-01	0.00E-01	0.00E-01
TC 99M	7.34E-03	3.41E-01	2.04E-04	5.76E-04	8.74E-03	0.00E-01	2.82E-04	0.00E-01
TC101	3.92E-28	1.20E-40	2.77E-29	3.99E-29	7.19E-28	0.00E-01	2.04E-29	0.00E-01

DOSE TRANSFER FACTORS FOR RADIONUCLIDES IN EFFLUENT WATER

AGE = ADULT
PATHWAY = ANIMAL DRINKING WATER--MILK

	TOTAL BODY	GI-LLI	BONE	LIVER	KIDNEY	THYROID	LUNG	SKIN
				(mrem gal)/(Ci min)				
RU103	7.18E-04	1.94E-01	1.67E-03	0.00E-01	6.36E-03	0.00E-01	0.00E-01	0.00E-01
RU105	2.69E-08	4.16E-05	6.80E-08	0.00E-01	8.79E-07	0.00E-01	0.00E-01	0.00E-01
RU106	3.24E-03	1.65E+00	2.56E-02	0.00E-01	4.94E-02	0.00E-01	0.00E-01	0.00E-01
AG110M	4.08E+01	2.80E+04	7.42E+01	6.87E+01	1.35E+02	0.00E-01	0.00E-01	0.00E-01
TE125M	3.27E+00	9.75E+01	2.44E+01	8.85E+00	9.93E+01	7.34E+00	0.00E-01	0.00E-01
TE127M	7.60E+00	2.09E+02	6.24E+01	2.23E+01	2.53E+02	1.59E+01	0.00E-01	0.00E-01
TE127	5.87E-03	2.14E+00	2.71E-02	9.74E-03	1.10E-01	2.01E-02	0.00E-01	0.00E-01
TE129M	1.63E+01	5.18E+02	1.03E+02	3.84E+01	4.29E+02	3.53E+01	0.00E-01	0.00E-01
TE129	1.37E-14	4.24E-14	5.62E-14	2.11E-14	2.36E-13	4.31E-14	0.00E-01	0.00E-01
TE131M	2.12E+00	2.53E+02	5.20E+00	2.54E+00	2.58E+01	4.03E+00	0.00E-01	0.00E-01
TE131	9.67E-29	4.34E-29	3.06E-28	1.28E-28	1.34E-27	2.52E-28	0.00E-01	0.00E-01
TE132	9.25E+00	4.66E+02	1.52E+01	9.86E+00	9.49E+01	1.09E+01	0.00E-01	0.00E-01
I 130	3.14E+00	6.86E+00	2.70E+00	7.97E+00	1.24E+01	6.75E+02	0.00E-01	0.00E-01
I 131	1.60E+02	7.37E+01	1.95E+02	2.79E+02	4.79E+02	9.16E+04	0.00E-01	0.00E-01
I 132	4.12E-06	2.21E-06	4.40E-06	1.18E-05	1.88E-05	4.12E-04	0.00E-01	0.00E-01
I 133	8.25E+00	2.43E+01	1.56E+01	2.71E+01	4.72E+01	3.98E+03	0.00E-01	0.00E-01
I 134	8.07E-17	1.97E-19	8.31E-17	2.26E-16	3.59E-16	3.91E-15	0.00E-01	0.00E-01
I 135	1.39E-01	4.25E-01	1.44E-01	3.76E-01	6.04E-01	2.48E+01	0.00E-01	0.00E-01
CS134	1.35E+04	2.89E+02	6.95E+03	1.65E+04	5.35E+03	0.00E-01	1.78E+03	0.00E-01
CS136	1.86E+03	2.94E+02	6.54E+02	2.58E+03	1.44E+03	0.00E-01	1.97E+02	0.00E-01
CS137	8.00E+03	2.36E+02	8.92E+03	1.22E+04	4.14E+03	0.00E-01	1.38E+03	0.00E-01
CS138	1.46E-26	1.26E-31	1.49E-26	2.95E-26	2.16E-26	0.00E-01	2.14E-27	0.00E-01
BA139	2.00E-13	1.21E-11	6.82E-12	4.86E-15	4.54E-15	0.00E-01	2.76E-15	0.00E-01
BA140	4.45E+00	1.40E+02	6.78E+01	8.52E-02	2.90E-02	0.00E-01	4.88E-02	0.00E-01
BA141	5.34E-30	7.46E-38	1.58E-28	1.20E-31	1.11E-31	0.00E-01	6.79E-32	0.00E-01
BA142	8.97E-31	0.00E-01	1.43E-29	1.47E-32	1.24E-32	0.00E-01	8.30E-33	0.00E-01
LA140	6.69E-06	1.86E+00	5.02E-05	2.53E-05	0.00E-01	0.00E-01	0.00E-01	0.00E-01
LA142	1.80E-16	5.26E-12	1.59E-15	7.21E-16	0.00E-01	0.00E-01	0.00E-01	0.00E-01
CE141	6.42E-04	2.16E+01	8.36E-03	5.66E-03	2.63E-03	0.00E-01	0.00E-01	0.00E-01
CE143	4.52E-05	1.53E+01	5.53E-04	4.09E-01	1.80E-04	0.00E-01	0.00E-01	0.00E-01
CE144	2.43E-02	1.53E+02	4.53E-01	1.90E-01	1.12E-01	0.00E-01	0.00E-01	0.00E-01
PR143	1.92E-05	1.70E+00	3.87E-04	1.55E-04	8.96E-05	0.00E-01	0.00E-01	0.00E-01
PR144	5.62E-35	1.59E-40	1.11E-33	4.60E-34	2.59E-34	0.00E-01	0.00E-01	0.00E-01
ND147	1.79E-05	1.43E+00	2.58E-04	2.99E-04	1.75E-04	0.00E-01	0.00E-01	0.00E-01
W 187	3.40E-02	3.18E+01	1.16E-01	9.71E-02	0.00E-01	0.00E-01	0.00E-01	0.00E-01
NP239	1.65E-06	6.15E-01	3.05E-05	3.00E-06	9.35E-06	0.00E-01	0.00E-01	0.00E-01

DOSE TRANSFER FACTORS FOR RADIONUCLIDES IN EFFLUENT WATER

AGE = ADULT
PATHWAY = ANIMAL DRINKING WATER–MEAT

	TOTAL BODY	GI-LLI	BONE	LIVER	KIDNEY	THYROID	LUNG	SKIN
				(mrem gal)/(Ci min)				
H 3	1.65E+00	1.65E+00	0.00E-01	1.65E+00	1.65E+00	1.65E+00	1.65E+00	0.00E-01
C 14	4.86E+01	4.86E+01	2.43E+02	4.86E+01	4.86E+01	4.86E+01	4.86E+01	0.00E-01
NA 24	3.33E-08	3.33E-08	3.33E-08	3.33E-08	3.33E-08	3.33E-08	3.33E-08	0.00E-01
P 32	3.58E+02	1.04E+03	9.27E+03	5.77E+02	0.00E-01	0.00E-01	0.00E-01	0.00E-01
CR 51	1.07E-02	2.68E+00	0.00E-01	0.00E-01	2.35E-03	6.37E-03	1.42E-02	0.00E-01
MN 54	1.84E+00	2.96E+01	0.00E-01	9.65E+00	2.87E+00	0.00E-01	0.00E-01	0.00E-01
MN 56	3.01E-28	5.42E-26	0.00E-01	1.70E-27	2.16E-27	0.00E-01	0.00E-01	0.00E-01
FE 55	4.82E+01	1.19E+02	2.99E+02	2.07E+02	0.00E-01	0.00E-01	1.15E+02	0.00E-01
FE 59	3.16E+02	2.75E+03	3.51E+02	8.24E+02	0.00E-01	0.00E-01	2.30E+02	0.00E-01
CO 58	4.93E+01	4.45E+02	0.00E-01	2.20E+01	0.00E-01	0.00E-01	0.00E-01	0.00E-01
CO 60	1.68E+02	1.43E+03	0.00E-01	7.62E+01	0.00E-01	0.00E-01	0.00E-01	0.00E-01
NI 63	6.37E+02	2.75E+02	1.90E+04	1.32E+03	0.00E-01	0.00E-01	0.00E-01	0.00E-01
NI 65	3.05E-26	1.69E-24	5.14E-25	6.67E-26	0.00E-01	0.00E-01	0.00E-01	0.00E-01
CU 64	3.20E-12	5.81E-10	0.00E-01	6.82E-12	1.72E-11	0.00E-01	0.00E-01	0.00E-01
ZN 65	5.44E+02	7.59E+02	3.78E+02	1.20E+03	8.06E+02	0.00E-01	0.00E-01	0.00E-01
ZN 69	4.78E-28	1.03E-27	3.60E-27	6.88E-27	4.47E-27	0.00E-01	0.00E-01	0.00E-01
BR 83	1.89E-26	2.72E-26	0.00E-01	0.00E-01	0.00E-01	0.00E-01	0.00E-01	0.00E-01
BR 84	8.86E-27	6.96E-32	0.00E-01	0.00E-01	0.00E-01	0.00E-01	0.00E-01	0.00E-01
BR 85	6.73E-34	0.00E-01	0.00E-01	0.00E-01	0.00E-01	0.00E-01	0.00E-01	0.00E-01
RB 86	4.00E+02	1.69E+02	0.00E-01	8.59E+02	0.00E-01	0.00E-01	0.00E-01	0.00E-01
RB 88	2.34E-27	6.10E-38	0.00E-01	4.41E-27	0.00E-01	0.00E-01	0.00E-01	0.00E-01
RB 89	1.38E-27	1.14E-40	0.00E-01	1.97E-27	0.00E-01	0.00E-01	0.00E-01	0.00E-01
SR 89	1.11E+01	6.21E+01	3.87E+02	0.00E-01	0.00E-01	0.00E-01	0.00E-01	0.00E-01
SR 90	2.89E+02	3.62E+02	1.44E+04	0.00E-01	0.00E-01	0.00E-01	0.00E-01	0.00E-01
SR 91	2.06E-16	2.42E-14	5.09E-15	0.00E-01	0.00E-01	0.00E-01	0.00E-01	0.00E-01
SR 92	1.04E-27	4.78E-25	2.41E-26	0.00E-01	0.00E-01	0.00E-01	0.00E-01	0.00E-01
Y 90	1.82E-05	7.18E+00	6.77E-04	0.00E-01	0.00E-01	0.00E-01	0.00E-01	0.00E-01
Y 91M	1.69E-31	1.28E-29	4.37E-30	0.00E-01	0.00E-01	0.00E-01	0.00E-01	0.00E-01
Y 91	3.77E-02	7.77E+02	1.41E+00	0.00E-01	0.00E-01	0.00E-01	0.00E-01	0.00E-01
Y 92	2.26E-30	1.35E-24	7.73E-29	0.00E-01	0.00E-01	0.00E-01	0.00E-01	0.00E-01
Y 93	4.07E-18	4.67E-12	1.47E-16	0.00E-01	0.00E-01	0.00E-01	0.00E-01	0.00E-01
ZR 95	4.99E-01	2.33E+03	2.30E+00	7.37E-01	1.16E+00	0.00E-01	0.00E-01	0.00E-01
ZR 97	3.89E-11	2.63E-05	4.21E-10	8.50E-11	1.28E-10	0.00E-01	0.00E-01	0.00E-01
NB 95	9.69E-01	1.09E+04	3.24E+00	1.80E+00	1.78E+00	0.00E-01	0.00E-01	0.00E-01
MO 99	1.15E-01	1.40E+00	0.00E-01	6.06E-01	1.37E+00	0.00E-01	0.00E-01	0.00E-01
TC 99M	8.45E-24	3.93E-22	2.35E-25	6.64E-25	1.01E-23	0.00E-01	3.25E-25	0.00E-01
TC101	1.85E-27	5.68E-40	1.31E-28	1.89E-28	3.40E-27	0.00E-01	9.65E-29	0.00E-01

DOSE TRANSFER FACTORS FOR RADIONUCLIDES IN EFFLUENT WATER

AGE = ADULT
PATHWAY = ANIMAL DRINKING WATER--MEAT

	TOTAL BODY	GI-LLI	BONE	LIVER	KIDNEY	THYROID	LUNG	SKIN
				(mrem gal)/(Ci min)				
RU103	6.18E+01	1.67E+04	1.43E+02	0.00E-01	5.47E+02	0.00E-01	0.00E-01	0.00E-01
RU105	5.03E-26	7.79E-23	1.27E-25	0.00E-01	1.65E-24	0.00E-01	0.00E-01	0.00E-01
RU106	3.70E+02	1.89E+05	2.92E+03	0.00E-01	5.64E+03	0.00E-01	0.00E-01	0.00E-01
AG110M	3.90E+00	2.68E+03	7.10E+00	6.57E+00	1.29E+01	0.00E-01	0.00E-01	0.00E-01
TE125M	6.01E+01	1.79E+03	4.48E+02	1.62E+02	1.82E+03	1.35E+02	0.00E-01	0.00E-01
TE127M	1.54E+02	4.25E+03	1.27E+03	4.53E+02	5.14E+03	3.24E+02	0.00E-01	0.00E-01
TE127	1.63E-15	5.95E-13	7.54E-15	2.71E-15	3.07E-14	5.58E-15	0.00E-01	0.00E-01
TE129M	2.56E+02	8.13E+03	1.62E+03	6.03E+02	6.74E+03	5.55E+02	0.00E-01	0.00E-01
TE129	7.83E-27	2.43E-26	3.21E-26	1.21E-26	1.35E-25	2.47E-26	0.00E-01	0.00E-01
TE131M	2.23E-03	2.65E-01	5.46E-03	2.67E-03	2.71E-02	4.23E-03	0.00E-01	0.00E-01
TE131	2.20E-27	9.87E-28	6.97E-27	2.91E-27	3.06E-26	5.73E-27	0.00E-01	0.00E-01
TE132	4.59E+00	2.31E+02	7.57E+00	4.89E+00	4.71E+01	5.40E+00	0.00E-01	0.00E-01
I 130	1.31E-11	2.85E-11	1.12E-11	3.31E-11	5.17E-11	2.81E-09	0.00E-01	0.00E-01
I 131	4.85E+00	2.23E+00	5.91E+00	8.46E+00	1.45E+01	2.77E+03	0.00E-01	0.00E-01
I 132	9.85E-27	5.29E-27	1.05E-26	2.81E-26	4.48E-26	9.85E-25	0.00E-01	0.00E-01
I 133	6.67E-07	1.96E-06	1.26E-06	2.19E-06	3.82E-06	3.21E-04	0.00E-01	0.00E-01
I 134	3.27E-27	7.97E-30	3.36E-27	9.14E-27	1.45E-26	1.58E-25	0.00E-01	0.00E-01
I 135	3.76E-22	1.15E-21	3.90E-22	1.02E-21	1.64E-21	6.73E-20	0.00E-01	0.00E-01
CS134	1.31E+03	2.81E+01	6.74E+02	1.60E+03	5.19E+02	0.00E-01	1.72E+02	0.00E-01
CS136	7.08E+01	1.12E+01	2.49E+01	9.83E+01	5.47E+01	0.00E-01	7.50E+00	0.00E-01
CS137	7.87E+02	2.33E+01	8.79E+02	1.20E+03	4.08E+02	0.00E-01	1.36E+02	0.00E-01
CS138	1.44E-27	1.24E-32	1.47E-27	2.90E-27	2.13E-27	0.00E-01	2.11E-28	0.00E-01
BA139	1.33E-28	8.04E-27	4.53E-27	3.23E-30	3.02E-30	0.00E-01	1.83E-30	0.00E-01
BA140	3.97E+00	1.25E+02	6.05E+01	7.60E-02	2.58E-02	0.00E-01	4.35E-02	0.00E-01
BA141	1.26E-29	1.76E-37	3.74E-28	2.83E-31	2.63E-31	0.00E-01	1.61E-31	0.00E-01
BA142	2.12E-30	0.00E-01	3.37E-29	3.47E-32	2.93E-32	0.00E-01	1.96E-32	0.00E-01
LA140	4.67E-08	1.30E-02	3.51E-07	1.77E-07	0.00E-01	0.00E-01	0.00E-01	0.00E-01
LA142	4.47E-32	1.31E-27	3.94E-31	1.79E-31	0.00E-01	0.00E-01	0.00E-01	0.00E-01
CE141	1.55E-03	5.23E+01	2.02E-02	1.37E-02	6.35E-03	0.00E-01	0.00E-01	0.00E-01
CE143	1.91E-08	6.45E-03	2.34E-07	1.73E-04	7.60E-08	0.00E-01	0.00E-01	0.00E-01
CE144	8.26E-02	5.20E+02	1.54E+00	6.43E-01	3.82E-01	0.00E-01	0.00E-01	0.00E-01
PR143	2.13E-03	1.88E+02	4.30E-02	1.72E-02	9.95E-03	0.00E-01	0.00E-01	0.00E-01
PR144	1.56E-32	4.42E-38	3.08E-31	1.28E-31	7.20E-32	0.00E-01	0.00E-01	0.00E-01
ND147	1.13E-03	9.09E+01	1.64E-02	1.89E-02	1.11E-02	0.00E-01	0.00E-01	0.00E-01
W 187	9.54E-08	8.94E-05	3.26E-07	2.73E-07	0.00E-01	0.00E-01	0.00E-01	0.00E-01
NP239	9.88E-08	3.67E-02	1.82E-06	1.79E-07	5.59E-07	0.00E-01	0.00E-01	0.00E-01

DOSE TRANSFER FACTORS FOR RADIONUCLIDES IN EFFLUENT WATER

AGE = ADULT
PATHWAY = RIVER SHORELINE DEPOSITS

	TOTAL BODY	GI-LLI	BONE	LIVER	KIDNEY	THYROID	LUNG	SKIN
				(mrem gal)/(Ci min)				
H 3	0.00E-01	0.00E-01	0.00E-01	0.00E-01	0.00E-01	0.00E-01	0.00E-01	0.00E-01
C 14	0.00E-01	0.00E-01	0.00E-01	0.00E-01	0.00E-01	0.00E-01	0.00E-01	0.00E-01
NA 24	1.88E+00	1.88E+00	1.88E+00	1.88E+00	1.88E+00	1.88E+00	1.88E+00	2.18E+00
P 32	0.00E-01	0.00E-01	0.00E-01	0.00E-01	0.00E-01	0.00E-01	0.00E-01	0.00E-01
CR 51	7.33E-01	7.33E-01	7.33E-01	7.33E-01	7.33E-01	7.33E-01	7.33E-01	8.66E-01
MN 54	2.18E+02	2.18E+02	2.18E+02	2.18E+02	2.18E+02	2.18E+02	2.18E+02	2.56E+02
MN 56	1.38E-01	1.38E-01	1.38E-01	1.38E-01	1.38E-01	1.38E-01	1.38E-01	1.63E-01
FE 55	0.00E-01	0.00E-01	0.00E-01	0.00E-01	0.00E-01	0.00E-01	0.00E-01	0.00E-01
FE 59	4.29E+01	4.29E+01	4.29E+01	4.29E+01	4.29E+01	4.29E+01	4.29E+01	5.04E+01
CO 58	5.98E+01	5.98E+01	5.98E+01	5.98E+01	5.98E+01	5.98E+01	5.98E+01	7.01E+01
CO 60	3.38E+03	3.38E+03	3.38E+03	3.38E+03	3.38E+03	3.38E+03	3.38E+03	3.98E+03
NI 63	0.00E-01	0.00E-01	0.00E-01	0.00E-01	0.00E-01	0.00E-01	0.00E-01	0.00E-01
NI 65	4.55E-02	4.55E-02	4.55E-02	4.55E-02	4.55E-02	4.55E-02	4.55E-02	5.29E-02
CU 64	9.48E-02	9.48E-02	9.48E-02	9.48E-02	9.48E-02	9.48E-02	9.48E-02	1.07E-01
ZN 65	1.17E+02	1.17E+02	1.17E+02	1.17E+02	1.17E+02	1.17E+02	1.17E+02	1.35E+02
ZN 69	0.00E-01	0.00E-01	0.00E-01	0.00E-01	0.00E-01	0.00E-01	0.00E-01	0.00E-01
BR 83	7.46E-04	7.46E-04	7.46E-04	7.46E-04	7.46E-04	7.46E-04	7.46E-04	1.08E-03
BR 84	2.80E-02	2.80E-02	2.80E-02	2.80E-02	2.80E-02	2.80E-02	2.80E-02	3.27E-02
BR 85	0.00E-01	0.00E-01	0.00E-01	0.00E-01	0.00E-01	0.00E-01	0.00E-01	0.00E-01
RB 86	1.42E+00	1.42E+00	1.42E+00	1.42E+00	1.42E+00	1.42E+00	1.42E+00	1.62E+00
RB 88	4.14E-03	4.14E-03	4.14E-03	4.14E-03	4.14E-03	4.14E-03	4.14E-03	4.73E-03
RB 89	1.46E-02	1.46E-02	1.46E-02	1.46E-02	1.46E-02	1.46E-02	1.46E-02	1.75E-02
SR 89	3.40E-03	3.40E-03	3.40E-03	3.40E-03	3.40E-03	3.40E-03	3.40E-03	3.95E-03
SR 90	0.00E-01	0.00E-01	0.00E-01	0.00E-01	0.00E-01	0.00E-01	0.00E-01	0.00E-01
SR 91	3.35E-01	3.35E-01	3.35E-01	3.35E-01	3.35E-01	3.35E-01	3.35E-01	3.92E-01
SR 92	1.19E-01	1.19E-01	1.19E-01	1.19E-01	1.19E-01	1.19E-01	1.19E-01	1.33E-01
Y 90	7.08E-04	7.08E-04	7.08E-04	7.08E-04	7.08E-04	7.08E-04	7.08E-04	8.36E-04
Y 91M	1.45E-02	1.45E-02	1.45E-02	1.45E-02	1.45E-02	1.45E-02	1.45E-02	1.68E-02
Y 91	1.69E-01	1.69E-01	1.69E-01	1.69E-01	1.69E-01	1.69E-01	1.69E-01	1.90E-01
Y 92	2.80E-02	2.80E-02	2.80E-02	2.80E-02	2.80E-02	2.80E-02	2.80E-02	3.32E-02
Y 93	2.86E-02	2.86E-02	2.86E-02	2.86E-02	2.86E-02	2.86E-02	2.86E-02	3.92E-02
ZR 95	3.86E+01	3.86E+01	3.86E+01	3.86E+01	3.86E+01	3.86E+01	3.86E+01	4.48E+01
ZR 97	4.64E-01	4.64E-01	4.64E-01	4.64E-01	4.64E-01	4.64E-01	4.64E-01	5.40E-01
NB 95	2.16E+01	2.16E+01	2.16E+01	2.16E+01	2.16E+01	2.16E+01	2.16E+01	2.54E+01
MO 99	6.28E-01	6.28E-01	6.28E-01	6.28E-01	6.28E-01	6.28E-01	6.28E-01	7.27E-01
TC 99M	2.87E-02	2.87E-02	2.87E-02	2.87E-02	2.87E-02	2.87E-02	2.87E-02	3.28E-02
TC101	2.39E-03	2.39E-03	2.39E-03	2.39E-03	2.39E-03	2.39E-03	2.39E-03	2.66E-03

DOSE TRANSFER FACTORS FOR RADIONUCLIDES IN EFFLUENT WATER

AGE = ADULT
PATHWAY = RIVER SHORELINE DEPOSITS

	TOTAL BODY	GI-LLI	BONE	LIVER	KIDNEY	THYROID	LUNG	SKIN
				(mrem gal)/(Ci min)				
RU103	1.70E+01	1.70E+01	1.70E+01	1.70E+01	1.70E+01	1.70E+01	1.70E+01	1.99E+01
RU105	9.86E-02	9.86E-02	9.86E-02	9.86E-02	9.86E-02	9.86E-02	9.86E-02	1.12E-01
RU106	6.65E+01	6.65E+01	6.65E+01	6.65E+01	6.65E+01	6.65E+01	6.65E+01	7.97E+01
AG110M	5.43E+02	5.43E+02	5.43E+02	5.43E+02	5.43E+02	5.43E+02	5.43E+02	6.34E+02
TE125M	2.45E-01	2.45E-01	2.45E-01	2.45E-01	2.45E-01	2.45E-01	2.45E-01	3.36E-01
TE127M	1.44E-02	1.44E-02	1.44E-02	1.44E-02	1.44E-02	1.44E-02	1.44E-02	1.71E-02
TE127	4.65E-04	4.65E-04	4.65E-04	4.65E-04	4.65E-04	4.65E-04	4.65E-04	5.12E-04
TE129M	3.11E+00	3.11E+00	3.11E+00	3.11E+00	3.11E+00	3.11E+00	3.11E+00	3.64E+00
TE129	3.89E-03	3.89E-03	3.89E-03	3.89E-03	3.89E-03	3.89E-03	3.89E-03	4.60E-03
TE131M	1.26E+00	1.26E+00	1.26E+00	1.26E+00	1.26E+00	1.26E+00	1.26E+00	1.49E+00
TE131	3.90E-03	3.90E-03	3.90E-03	3.90E-03	3.90E-03	3.90E-03	3.90E-03	4.61E+00
TE132	6.67E-01	6.67E-01	6.67E-01	6.67E-01	6.67E-01	6.67E-01	6.67E-01	7.85E-01
I 130	8.62E-01	8.62E-01	8.62E-01	8.62E-01	8.62E-01	8.62E-01	8.62E-01	1.05E+00
I 131	2.71E+00	2.71E+00	2.71E+00	2.71E+00	2.71E+00	2.71E+00	2.71E+00	3.29E+00
I 132	1.90E-01	1.90E-01	1.90E-01	1.90E-01	1.90E-01	1.90E-01	1.90E-01	2.24E-01
I 133	3.85E-01	3.85E-01	3.85E-01	3.85E-01	3.85E-01	3.85E-01	3.85E-01	4.68E-01
I 134	6.49E-02	6.49E-02	6.49E-02	6.49E-02	6.49E-02	6.49E-02	6.49E-02	7.71E-02
I 135	3.93E-01	3.93E-01	3.93E-01	3.93E-01	3.93E-01	3.93E-01	3.93E-01	4.58E-01
CS134	1.08E+03	1.08E+03	1.08E+03	1.08E+03	1.08E+03	1.08E+03	1.08E+03	1.26E+03
CS136	2.37E+01	2.37E+01	2.37E+01	2.37E+01	2.37E+01	2.37E+01	2.37E+01	2.68E+01
CS137	1.62E+03	1.62E+03	1.62E+03	1.62E+03	1.62E+03	1.62E+03	1.62E+03	1.89E+03
CS138	4.98E-02	4.98E-02	4.98E-02	4.98E-02	4.98E-02	4.98E-02	4.98E-02	5.69E-02
BA139	1.58E-02	1.58E-02	1.58E-02	1.58E-02	1.58E-02	1.58E-02	1.58E-02	1.77E-02
BA140	3.23E+00	3.23E+00	3.23E+00	3.23E+00	3.23E+00	3.23E+00	3.23E+00	3.70E+00
BA141	5.24E-03	5.24E-03	5.24E-03	5.24E-03	5.24E-03	5.24E-03	5.24E-03	5.97E-03
BA142	4.79E-03	4.79E-03	4.79E-03	4.79E-03	4.79E-03	4.79E-03	4.79E-03	5.46E-03
LA140	3.03E+00	3.03E+00	3.03E+00	3.03E+00	3.03E+00	3.03E+00	3.03E+00	3.43E+00
LA142	1.11E-01	1.11E-01	1.11E-01	1.11E-01	1.11E-01	1.11E-01	1.11E-01	1.33E-01
CE141	2.15E+00	2.15E+00	2.15E+00	2.15E+00	2.15E+00	2.15E+00	2.15E+00	2.42E+00
CE143	3.65E-01	3.65E-01	3.65E-01	3.65E-01	3.65E-01	3.65E-01	3.65E-01	4.15E-01
CE144	1.10E+01	1.10E+01	1.10E+01	1.10E+01	1.10E+01	1.10E+01	1.10E+01	1.27E+01
PR143	0.00E-01	0.00E-01	0.00E-01	0.00E-01	0.00E-01	0.00E-01	0.00E-01	0.00E-01
PR144	2.27E-04	2.27E-04	2.27E-04	2.27E-04	2.27E-04	2.27E-04	2.27E-04	2.61E-04
ND147	1.34E+00	1.34E+00	1.34E+00	1.34E+00	1.34E+00	1.34E+00	1.34E+00	1.60E+00
W 187	3.71E-01	3.71E-01	3.71E-01	3.71E-01	3.71E-01	3.71E-01	3.71E-01	4.31E-01
NP239	2.70E-01	2.70E-01	2.70E-01	2.70E-01	2.70E-01	2.70E-01	2.70E-01	3.12E-01

DOSE TRANSFER FACTORS FOR RADIONUCLIDES IN EFFLUENT WATER

AGE = ADULT
PATHWAY = SWIMMING

	TOTAL BODY	GI-LLI	BONE	LIVER	KIDNEY	THYROID	LUNG	SKIN
				(mrem gal)/(Ci min)				
H 3	0.00E-01	0.00E-01	0.00E-01	0.00E-01	0.00E-01	0.00E-01	0.00E-01	0.00E-01
C 14	0.00E-01	0.00E-01	0.00E-01	0.00E-01	0.00E-01	0.00E-01	0.00E-01	0.00E-01
NA 24	3.12E+01	3.12E+01	3.12E+01	3.12E+01	3.12E+01	3.12E+01	3.12E+01	0.00E-01
P 32	2.57E-02	2.57E-02	2.57E-02	2.57E-02	2.57E-02	2.57E-02	2.57E-02	0.00E-01
CR 51	2.09E-01	2.09E-01	2.09E-01	2.09E-01	2.09E-01	2.09E-01	2.09E-01	0.00E-01
MN 54	6.02E+00	6.02E+00	6.02E+00	6.02E+00	6.02E+00	6.02E+00	6.02E+00	0.00E-01
MN 56	1.25E+01	1.25E+01	1.25E+01	1.25E+01	1.25E+01	1.25E+01	1.25E+01	0.00E-01
FE 55	2.57E-04	2.57E-04	2.57E-04	2.57E-04	2.57E-04	2.57E-04	2.57E-04	0.00E-01
FE 59	8.83E+00	8.83E+00	8.83E+00	8.83E+00	8.83E+00	8.83E+00	8.83E+00	0.00E-01
CO 58	7.23E+00	7.23E+00	7.23E+00	7.23E+00	7.23E+00	7.23E+00	7.23E+00	0.00E-01
CO 60	1.85E+01	1.85E+01	1.85E+01	1.85E+01	1.85E+01	1.85E+01	1.85E+01	0.00E-01
NI 63	0.00E-01	0.00E-01	0.00E-01	0.00E-01	0.00E-01	0.00E-01	0.00E-01	0.00E-01
NI 65	3.90E+00	3.90E+00	3.90E+00	3.90E+00	3.90E+00	3.90E+00	3.90E+00	0.00E-01
CU 64	1.48E+00	1.48E+00	1.48E+00	1.48E+00	1.48E+00	1.48E+00	1.48E+00	0.00E-01
ZN 65	4.42E+00	4.42E+00	4.42E+00	4.42E+00	4.42E+00	4.42E+00	4.42E+00	0.00E-01
ZN 69	5.97E-03	5.97E-03	5.97E-03	5.97E-03	5.97E-03	5.97E-03	5.97E-03	0.00E-01
BR 83	6.63E-02	6.63E-02	6.63E-02	6.63E-02	6.63E-02	6.63E-02	6.63E-02	0.00E-01
BR 84	1.23E+01	1.23E+01	1.23E+01	1.23E+01	1.23E+01	1.23E+01	1.23E+01	0.00E-01
BR 85	1.32E-02	1.32E-02	1.32E-02	1.32E-02	1.32E-02	1.32E-02	1.32E-02	0.00E-01
RB 86	6.82E-01	6.82E-01	6.82E-01	6.82E-01	6.82E-01	6.82E-01	6.82E-01	0.00E-01
RB 88	3.82E+00	3.82E+00	3.82E+00	3.82E+00	3.82E+00	3.82E+00	3.82E+00	0.00E-01
RB 89	1.38E+01	1.38E+01	1.38E+01	1.38E+01	1.38E+01	1.38E+01	1.38E+01	0.00E-01
SR 89	1.85E-02	1.85E-02	1.85E-02	1.85E-02	1.85E-02	1.85E-02	1.85E-02	0.00E-01
SR 90	2.17E-03	2.17E-03	2.17E-03	2.17E-03	2.17E-03	2.17E-03	2.17E-03	0.00E-01
SR 91	7.57E+00	7.57E+00	7.57E+00	7.57E+00	7.57E+00	7.57E+00	7.57E+00	0.00E-01
SR 92	1.02E+01	1.02E+01	1.02E+01	1.02E+01	1.02E+01	1.02E+01	1.02E+01	0.00E-01
Y 90	5.21E-02	5.21E-02	5.21E-02	5.21E-02	5.21E-02	5.21E-02	5.21E-02	0.00E-01
Y 91M	3.69E+00	3.69E+00	3.69E+00	3.69E+00	3.69E+00	3.69E+00	3.69E+00	0.00E-01
Y 91	2.69E-02	2.69E-02	2.69E-02	2.69E-02	2.69E-02	2.69E-02	2.69E-02	0.00E-01
Y 92	1.81E+00	1.81E+00	1.81E+00	1.81E+00	1.81E+00	1.81E+00	1.81E+00	0.00E-01
Y 93	7.57E-01	7.57E-01	7.57E-01	7.57E-01	7.57E-01	7.57E-01	7.57E-01	0.00E-01
ZR 95	6.02E+00	6.02E+00	6.02E+00	6.02E+00	6.02E+00	6.02E+00	6.02E+00	0.00E-01
ZR 97	6.00E+00	6.00E+00	6.00E+00	6.00E+00	6.00E+00	6.00E+00	6.00E+00	0.00E-01
NB 95	5.62E+00	5.62E+00	5.62E+00	5.62E+00	5.62E+00	5.62E+00	5.62E+00	0.00E-01
MO 99	1.88E+00	1.88E+00	1.88E+00	1.88E+00	1.88E+00	1.88E+00	1.88E+00	0.00E-01
TC 99M	9.52E-01	9.52E-01	9.52E-01	9.52E-01	9.52E-01	9.52E-01	9.52E-01	0.00E-01
TC101	2.04E+00	2.04E+00	2.04E+00	2.04E+00	2.04E+00	2.04E+00	2.04E+00	0.00E-01

DOSE TRANSFER FACTORS FOR RADIONUCLIDES IN EFFLUENT WATER

AGE = ADULT
PATHWAY = SWIMMING

	TOTAL BODY	GI-LLI	BONE	LIVER	KIDNEY	THYROID	LUNG	SKIN
				(mrem gal)/(Ci min)				
RU103	3.57E+00	3.57E+00	3.57E+00	3.57E+00	3.57E+00	3.57E+00	3.57E+00	0.00E-01
RU105	4.74E+00	4.74E+00	4.74E+00	4.74E+00	4.74E+00	4.74E+00	4.74E+00	0.00E-01
RU106	1.52E+00	1.52E+00	1.52E+00	1.52E+00	1.52E+00	1.52E+00	1.52E+00	0.00E-01
AG110M	1.97E+01	1.97E+01	1.97E+01	1.97E+01	1.97E+01	1.97E+01	1.97E+01	0.00E-01
TE125M	1.48E-02	1.48E-02	1.48E-02	1.48E-02	1.48E-02	1.48E-02	1.48E-02	0.00E-01
TE127M	1.04E-03	1.04E-03	1.04E-03	1.04E-03	1.04E-03	1.04E-03	1.04E-03	0.00E-01
TE127	1.12E-02	1.12E-02	1.12E-02	1.12E-02	1.12E-02	1.12E-02	1.12E-02	0.00E-01
TE129M	8.43E-01	8.43E-01	8.43E-01	8.43E-01	8.43E-01	8.43E-01	8.43E-01	0.00E-01
TE129	7.19E-01	7.19E-01	7.19E-01	7.19E-01	7.19E-01	7.19E-01	7.19E-01	0.00E-01
TE131M	8.81E+00	8.81E+00	8.81E+00	8.81E+00	8.81E+00	8.81E+00	8.81E+00	0.00E-01
TE131	2.52E+00	2.52E+00	2.52E+00	2.52E+00	2.52E+00	2.52E+00	2.52E+00	0.00E-01
TE132	1.60E+00	1.60E+00	1.60E+00	1.60E+00	1.60E+00	1.60E+00	1.60E+00	0.00E-01
I 130	1.56E+01	1.56E+01	1.56E+01	1.56E+01	1.56E+01	1.56E+01	1.56E+01	0.00E-01
I 131	3.13E+00	3.13E+00	3.13E+00	3.13E+00	3.13E+00	3.13E+00	3.13E+00	0.00E-01
I 132	1.71E+01	1.71E+01	1.71E+01	1.71E+01	1.71E+01	1.71E+01	1.71E+01	0.00E-01
I 133	3.84E+00	3.84E+00	3.84E+00	3.84E+00	3.84E+00	3.84E+00	3.84E+00	0.00E-01
I 134	1.56E+01	1.56E+01	1.56E+01	1.56E+01	1.56E+01	1.56E+01	1.56E+01	0.00E-01
I 135	1.31E+01	1.31E+01	1.31E+01	1.31E+01	1.31E+01	1.31E+01	1.31E+01	0.00E-01
CS134	1.16E+01	1.16E+01	1.16E+01	1.16E+01	1.16E+01	1.16E+01	1.16E+01	0.00E-01
CS136	1.65E+01	1.65E+01	1.65E+01	1.65E+01	1.65E+01	1.65E+01	1.65E+01	0.00E-01
CS137	4.01E+00	4.01E+00	4.01E+00	4.01E+00	4.01E+00	4.01E+00	4.01E+00	0.00E-01
CS138	1.41E+01	1.41E+01	1.41E+01	1.41E+01	1.41E+01	1.41E+01	1.41E+01	0.00E-01
BA139	2.94E-01	2.94E-01	2.94E-01	2.94E-01	2.94E-01	2.94E-01	2.94E-01	0.00E-01
BA140	1.97E+00	1.97E+00	1.97E+00	1.97E+00	1.97E+00	1.97E+00	1.97E+00	0.00E-01
BA141	3.52E+00	3.52E+00	3.52E+00	3.52E+00	3.52E+00	3.52E+00	3.52E+00	0.00E-01
BA142	5.99E+00	5.99E+00	5.99E+00	5.99E+00	5.99E+00	5.99E+00	5.99E+00	0.00E-01
LA140	1.64E+01	1.64E+01	1.64E+01	1.64E+01	1.64E+01	1.64E+01	1.64E+01	0.00E-01
LA142	1.73E+01	1.73E+01	1.73E+01	1.73E+01	1.73E+01	1.73E+01	1.73E+01	0.00E-01
CE141	5.22E-01	5.22E-01	5.22E-01	5.22E-01	5.22E-01	5.22E-01	5.22E-01	0.00E-01
CE143	2.28E+00	2.28E+00	2.28E+00	2.28E+00	2.28E+00	2.28E+00	2.28E+00	0.00E-01
CE144	3.45E-01	3.45E-01	3.45E-01	3.45E-01	3.45E-01	3.45E-01	3.45E-01	0.00E-01
PR143	6.42E-03	6.42E-03	6.42E-03	6.42E-03	6.42E-03	6.42E-03	6.42E-03	0.00E-01
PR144	1.77E-01	1.77E-01	1.77E-01	1.77E-01	1.77E-01	1.77E-01	1.77E-01	0.00E-01
ND147	1.12E+00	1.12E+00	1.12E+00	1.12E+00	1.12E+00	1.12E+00	1.12E+00	0.00E-01
W 187	3.32E+00	3.32E+00	3.32E+00	3.32E+00	3.32E+00	3.32E+00	3.32E+00	0.00E-01
NP239	9.62E-01	9.62E-01	9.62E-01	9.62E-01	9.62E-01	9.62E-01	9.62E-01	0.00E-01

DOSE TRANSFER FACTORS FOR RADIONUCLIDES IN EFFLUENT WATER

AGE = ADULT
PATHWAY = BOATING

	TOTAL BODY	GI-LLI	BONE	LIVER	KIDNEY	THYROID	LUNG	SKIN
				(mrem gal)/(Ci min)				
H 3	0.00E-01	0.00E-01	0.00E-01	0.00E-01	0.00E-01	0.00E-01	0.00E-01	0.00E-01
C 14	0.00E-01	0.00E-01	0.00E-01	0.00E-01	0.00E-01	0.00E-01	0.00E-01	0.00E-01
NA 24	5.65E+01	5.65E+01	5.65E+01	5.65E+01	5.65E+01	5.65E+01	5.65E+01	0.00E-01
P 32	4.66E-02	4.66E-02	4.66E-02	4.66E-02	4.66E-02	4.66E-02	4.66E-02	0.00E-01
CR 51	3.78E-01	3.78E-01	3.78E-01	3.78E-01	3.78E-01	3.78E-01	3.78E-01	0.00E-01
MN 54	1.09E+01	1.09E+01	1.09E+01	1.09E+01	1.09E+01	1.09E+01	1.09E+01	0.00E-01
MN 56	2.27E+01	2.27E+01	2.27E+01	2.27E+01	2.27E+01	2.27E+01	2.27E+01	0.00E-01
FE 55	4.66E-04	4.66E-04	4.66E-04	4.66E-04	4.66E-04	4.66E-04	4.66E-04	0.00E-01
FE 59	1.60E+01	1.60E+01	1.60E+01	1.60E+01	1.60E+01	1.60E+01	1.60E+01	0.00E-01
CO 58	1.31E+01	1.31E+01	1.31E+01	1.31E+01	1.31E+01	1.31E+01	1.31E+01	0.00E-01
CO 60	3.35E+01	3.35E+01	3.35E+01	3.35E+01	3.35E+01	3.35E+01	3.35E+01	0.00E-01
NI 63	0.00E-01	0.00E-01	0.00E-01	0.00E-01	0.00E-01	0.00E-01	0.00E-01	0.00E-01
NI 65	7.08E+00	7.08E+00	7.08E+00	7.08E+00	7.08E+00	7.08E+00	7.08E+00	0.00E-01
CU 64	2.68E+00	2.68E+00	2.68E+00	2.68E+00	2.68E+00	2.68E+00	2.68E+00	0.00E-01
ZN 65	8.00E+00	8.00E+00	8.00E+00	8.00E+00	8.00E+00	8.00E+00	8.00E+00	0.00E-01
ZN 69	1.08E-02	1.08E-02	1.08E-02	1.08E-02	1.08E-02	1.08E-02	1.08E-02	0.00E-01
BR 83	1.20E-01	1.20E-01	1.20E-01	1.20E-01	1.20E-01	1.20E-01	1.20E-01	0.00E-01
BR 84	2.24E+01	2.24E+01	2.24E+01	2.24E+01	2.24E+01	2.24E+01	2.24E+01	0.00E-01
BR 85	2.39E-02	2.39E-02	2.39E-02	2.39E-02	2.39E-02	2.39E-02	2.39E-02	0.00E-01
RB 86	1.24E+00	1.24E+00	1.24E+00	1.24E+00	1.24E+00	1.24E+00	1.24E+00	0.00E-01
RB 88	6.92E+00	6.92E+00	6.92E+00	6.92E+00	6.92E+00	6.92E+00	6.92E+00	0.00E-01
RB 89	2.49E+01	2.49E+01	2.49E+01	2.49E+01	2.49E+01	2.49E+01	2.49E+01	0.00E-01
SR 89	3.35E-02	3.35E-02	3.35E-02	3.35E-02	3.35E-02	3.35E-02	3.35E-02	0.00E-01
SR 90	3.93E-03	3.93E-03	3.93E-03	3.93E-03	3.93E-03	3.93E-03	3.93E-03	0.00E-01
SR 91	1.37E+01	1.37E+01	1.37E+01	1.37E+01	1.37E+01	1.37E+01	1.37E+01	0.00E-01
SR 92	1.84E+01	1.84E+01	1.84E+01	1.84E+01	1.84E+01	1.84E+01	1.84E+01	0.00E-01
Y 90	9.45E-02	9.45E-02	9.45E-02	9.45E-02	9.45E-02	9.45E-02	9.45E-02	0.00E-01
Y 91M	6.69E+00	6.69E+00	6.69E+00	6.69E+00	6.69E+00	6.69E+00	6.69E+00	0.00E-01
Y 91	4.87E-02	4.87E-02	4.87E-02	4.87E-02	4.87E-02	4.87E-02	4.87E-02	0.00E-01
Y 92	3.28E+00	3.28E+00	3.28E+00	3.28E+00	3.28E+00	3.28E+00	3.28E+00	0.00E-01
Y 93	1.37E+00	1.37E+00	1.37E+00	1.37E+00	1.37E+00	1.37E+00	1.37E+00	0.00E-01
ZR 95	1.09E+01	1.09E+01	1.09E+01	1.09E+01	1.09E+01	1.09E+01	1.09E+01	0.00E-01
ZR 97	1.09E+01	1.09E+01	1.09E+01	1.09E+01	1.09E+01	1.09E+01	1.09E+01	0.00E-01
NB 95	1.02E+01	1.02E+01	1.02E+01	1.02E+01	1.02E+01	1.02E+01	1.02E+01	0.00E-01
MO 99	3.42E+00	3.42E+00	3.42E+00	3.42E+00	3.42E+00	3.42E+00	3.42E+00	0.00E-01
TC 99M	1.73E+00	1.73E+00	1.73E+00	1.73E+00	1.73E+00	1.73E+00	1.73E+00	0.00E-01
TC101	3.69E+00	3.69E+00	3.69E+00	3.69E+00	3.69E+00	3.69E+00	3.69E+00	0.00E-01

DOSE TRANSFER FACTORS FOR RADIONUCLIDES IN EFFLUENT WATER

AGE = ADULT
PATHWAY = BOATING

	TOTAL BODY	GI-LLI	BONE	LIVER	KIDNEY	THYROID	LUNG	SKIN
				(mrem gal)/(Ci min)				
RU103	6.47E+00	6.47E+00	6.47E+00	6.47E+00	6.47E+00	6.47E+00	6.47E+00	0.00E-01
RU105	8.60E+00	8.60E+00	8.60E+00	8.60E+00	8.60E+00	8.60E+00	8.60E+00	0.00E-01
RU106	2.77E+00	2.77E+00	2.77E+00	2.77E+00	2.77E+00	2.77E+00	2.77E+00	0.00E-01
AG110M	3.57E+01	3.57E+01	3.57E+01	3.57E+01	3.57E+01	3.57E+01	3.57E+01	0.00E-01
TE125M	2.69E-02	2.69E-02	2.69E-02	2.69E-02	2.69E-02	2.69E-02	2.69E-02	0.00E-01
TE127M	1.89E-03	1.89E-03	1.89E-03	1.89E-03	1.89E-03	1.89E-03	1.89E-03	0.00E-01
TE127	2.02E-02	2.02E-02	2.02E-02	2.02E-02	2.02E-02	2.02E-02	2.02E-02	0.00E-01
TE129M	1.53E+00	1.53E+00	1.53E+00	1.53E+00	1.53E+00	1.53E+00	1.53E+00	0.00E-01
TE129	1.30E+00	1.30E+00	1.30E+00	1.30E+00	1.30E+00	1.30E+00	1.30E+00	0.00E-01
TE131M	1.60E+01	1.60E+01	1.60E+01	1.60E+01	1.60E+01	1.60E+01	1.60E+01	0.00E-01
TE131	4.56E+00	4.56E+00	4.56E+00	4.56E+00	4.56E+00	4.56E+00	4.56E+00	0.00E-01
TE132	2.91E+00	2.91E+00	2.91E+00	2.91E+00	2.91E+00	2.91E+00	2.91E+00	0.00E-01
I 130	2.82E+01	2.82E+01	2.82E+01	2.82E+01	2.82E+01	2.82E+01	2.82E+01	0.00E-01
I 131	5.67E+00	5.67E+00	5.67E+00	5.67E+00	5.67E+00	5.67E+00	5.67E+00	0.00E-01
I 132	3.11E+01	3.11E+01	3.11E+01	3.11E+01	3.11E+01	3.11E+01	3.11E+01	0.00E-01
I 133	6.96E+00	6.96E+00	6.96E+00	6.96E+00	6.96E+00	6.96E+00	6.96E+00	0.00E-01
I 134	2.82E+01	2.82E+01	2.82E+01	2.82E+01	2.82E+01	2.82E+01	2.82E+01	0.00E-01
I 135	2.38E+01	2.38E+01	2.38E+01	2.38E+01	2.38E+01	2.38E+01	2.38E+01	0.00E-01
CS134	2.11E+01	2.11E+01	2.11E+01	2.11E+01	2.11E+01	2.11E+01	2.11E+01	0.00E-01
CS136	2.98E+01	2.98E+01	2.98E+01	2.98E+01	2.98E+01	2.98E+01	2.98E+01	0.00E-01
CS137	7.28E+00	7.28E+00	7.28E+00	7.28E+00	7.28E+00	7.28E+00	7.28E+00	0.00E-01
CS138	2.56E+01	2.56E+01	2.56E+01	2.56E+01	2.56E+01	2.56E+01	2.56E+01	0.00E-01
BA139	5.33E-01	5.33E-01	5.33E-01	5.33E-01	5.33E-01	5.33E-01	5.33E-01	0.00E-01
BA140	3.56E+00	3.56E+00	3.56E+00	3.56E+00	3.56E+00	3.56E+00	3.56E+00	0.00E-01
BA141	6.37E+00	6.37E+00	6.37E+00	6.37E+00	6.37E+00	6.37E+00	6.37E+00	0.00E-01
BA142	1.09E+01	1.09E+01	1.09E+01	1.09E+01	1.09E+01	1.09E+01	1.09E+01	0.00E-01
LA140	2.98E+01	2.98E+01	2.98E+01	2.98E+01	2.98E+01	2.98E+01	2.98E+01	0.00E-01
LA142	3.13E+01	3.13E+01	3.13E+01	3.13E+01	3.13E+01	3.13E+01	3.13E+01	0.00E-01
CE141	9.46E-01	9.46E-01	9.46E-01	9.46E-01	9.46E-01	9.46E-01	9.46E-01	0.00E-01
CE143	4.14E+00	4.14E+00	4.14E+00	4.14E+00	4.14E+00	4.14E+00	4.14E+00	0.00E-01
CE144	6.26E-01	6.26E-01	6.26E-01	6.26E-01	6.26E-01	6.26E-01	6.26E-01	0.00E-01
PR143	1.16E-02	1.16E-02	1.16E-02	1.16E-02	1.16E-02	1.16E-02	1.16E-02	0.00E-01
PR144	3.20E-01	3.20E-01	3.20E-01	3.20E-01	3.20E-01	3.20E-01	3.20E-01	0.00E-01
ND147	2.04E+00	2.04E+00	2.04E+00	2.04E+00	2.04E+00	2.04E+00	2.04E+00	0.00E-01
W 187	6.02E+00	6.02E+00	6.02E+00	6.02E+00	6.02E+00	6.02E+00	6.02E+00	0.00E-01
NP239	1.74E+00	1.74E+00	1.74E+00	1.74E+00	1.74E+00	1.74E+00	1.74E+00	0.00E-01

DOSE TRANSFER FACTORS FOR RADIONUCLIDES IN EFFLUENT WATER

AGE = TEENAGER
PATHWAY = POTABLE WATER

	TOTAL BODY	GI-LLI	BONE	LIVER	KIDNEY	THYROID	LUNG	SKIN
				(mrem gal)/(Ci min)				
H 3	1.54E+01	1.54E+01	0.00E-01	1.54E+01	1.54E+01	1.54E+01	1.54E+01	0.00E-01
C 14	2.08E+02	2.08E+02	1.04E+03	2.08E+02	2.08E+02	2.08E+02	2.08E+02	0.00E-01
NA 24	1.95E+02	1.95E+02	1.95E+02	1.95E+02	1.95E+02	1.95E+02	1.95E+02	0.00E-01
P 32	2.61E+03	5.66E+03	6.73E+04	4.17E+03	0.00E-01	0.00E-01	0.00E-01	0.00E-01
CR 51	8.99E-01	1.51E+02	0.00E-01	0.00E-01	1.97E-01	4.99E-01	1.28E+00	0.00E-01
MN 54	2.99E+02	3.09E+03	0.00E-01	1.51E+03	4.49E+02	0.00E-01	0.00E-01	0.00E-01
MN 56	1.10E-02	4.08E+00	0.00E-01	6.20E-02	7.85E-02	0.00E-01	0.00E-01	0.00E-01
FE 55	1.60E+02	2.97E+02	9.67E+02	6.85E+02	0.00E-01	0.00E-01	4.35E+02	0.00E-01
FE 59	1.33E+03	8.16E+03	1.48E+03	3.45E+03	0.00E-01	0.00E-01	1.09E+03	0.00E-01
CO 58	5.68E+02	3.40E+03	0.00E-01	2.46E+02	0.00E-01	0.00E-01	0.00E-01	0.00E-01
CO 60	1.62E+03	9.36E+03	0.00E-01	7.19E+02	0.00E-01	0.00E-01	0.00E-01	0.00E-01
NI 63	1.53E+03	5.09E+02	4.53E+04	3.20E+03	0.00E-01	0.00E-01	0.00E-01	0.00E-01
NI 65	1.52E-02	1.80E+00	2.61E-01	3.33E-02	0.00E-01	0.00E-01	0.00E-01	0.00E-01
CU 64	3.72E+00	6.14E+02	0.00E-01	7.91E+00	2.00E+01	0.00E-01	0.00E-01	0.00E-01
ZN 65	2.38E+03	2.16E+03	1.47E+03	5.10E+03	3.27E+03	0.00E-01	0.00E-01	0.00E-01
ZN 69	1.21E-08	3.19E-07	9.08E-08	1.73E-07	1.13E-07	0.00E-01	0.00E-01	0.00E-01
BR 83	1.40E-02	0.00E-01	0.00E-01	0.00E-01	0.00E-01	0.00E-01	0.00E-01	0.00E-01
BR 84	0.00E-01	0.00E-01	0.00E-01	0.00E-01	0.00E-01	0.00E-01	0.00E-01	0.00E-01
BR 85	0.00E-01	0.00E-01	0.00E-01	0.00E-01	0.00E-01	0.00E-01	0.00E-01	0.00E-01
RB 86	3.45E+03	1.09E+03	0.00E-01	7.35E+03	0.00E-01	0.00E-01	0.00E-01	0.00E-01
RB 88	0.00E-01	0.00E-01	0.00E-01	0.00E-01	0.00E-01	0.00E-01	0.00E-01	0.00E-01
RB 89	0.00E-01	0.00E-01	0.00E-01	0.00E-01	0.00E-01	0.00E-01	0.00E-01	0.00E-01
SR 89	3.18E+03	1.32E+04	1.11E+05	0.00E-01	0.00E-01	0.00E-01	0.00E-01	0.00E-01
SR 90	5.22E+04	5.96E+04	2.61E+06	0.00E-01	0.00E-01	0.00E-01	0.00E-01	0.00E-01
SR 91	1.42E+01	1.62E+03	3.57E+02	0.00E-01	0.00E-01	0.00E-01	0.00E-01	0.00E-01
SR 92	7.21E-02	4.31E+01	1.69E+00	0.00E-01	0.00E-01	0.00E-01	0.00E-01	0.00E-01
Y 90	7.29E-02	2.23E+04	2.70E+00	0.00E-01	0.00E-01	0.00E-01	0.00E-01	0.00E-01
Y 91M	0.00E-01	0.00E-01	0.00E-01	0.00E-01	0.00E-01	0.00E-01	0.00E-01	0.00E-01
Y 91	1.36E+00	2.08E+04	5.08E+01	0.00E-01	0.00E-01	0.00E-01	0.00E-01	0.00E-01
Y 92	8.29E-05	7.86E+01	2.86E-03	0.00E-01	0.00E-01	0.00E-01	0.00E-01	0.00E-01
Y 93	5.16E-03	5.75E+03	1.88E-01	0.00E-01	0.00E-01	0.00E-01	0.00E-01	0.00E-01
ZR 95	2.26E+00	7.59E+03	1.04E+01	3.29E+00	4.84E+00	0.00E-01	0.00E-01	0.00E-01
ZR 97	2.06E-02	1.21E+04	2.27E-01	4.48E-02	6.80E-02	0.00E-01	0.00E-01	0.00E-01
NB 95	6.30E-01	4.89E+03	2.06E+00	1.14E+00	1.11E+00	0.00E-01	0.00E-01	0.00E-01
MO 99	2.29E+02	2.15E+03	0.00E-01	1.20E+03	2.74E+03	0.00E-01	0.00E-01	0.00E-01
TC 99M	1.93E-01	9.80E+00	5.35E-03	1.49E-02	2.22E-01	0.00E-01	8.29E-03	0.00E-01
TC101	0.00E-01	0.00E-01	0.00E-01	0.00E-01	0.00E-01	0.00E-01	0.00E-01	0.00E-01

DOSE TRANSFER FACTORS FOR RADIONUCLIDES IN EFFLUENT WATER

AGE = TEENAGER
PATHWAY = POTABLE WATER

	TOTAL BODY	GI-LLI	BONE	LIVER	KIDNEY	THYROID	LUNG	SKIN
				(mrem gal)/(Ci min)				
RU103	2.74E+01	5.36E+03	6.41E+01	0.00E-01	2.26E+02	0.00E-01	0.00E-01	0.00E-01
RU105	5.09E-02	1.06E+02	1.31E-01	0.00E-01	1.65E+00	0.00E-01	0.00E-01	0.00E-01
RU106	1.26E+02	4.80E+04	1.00E+03	0.00E-01	1.93E+03	0.00E-01	0.00E-01	0.00E-01
AG110M	3.01E+01	1.39E+04	5.23E+01	4.95E+01	9.44E+01	0.00E-01	0.00E-01	0.00E-01
TE125M	1.29E+02	2.86E+03	9.68E+02	3.49E+02	0.00E-01	2.71E+02	0.00E-01	0.00E-01
TE127M	2.92E+02	6.13E+03	2.46E+03	8.72E+02	9.97E+03	5.85E+02	0.00E-01	0.00E-01
TE127	1.47E+00	5.27E+02	6.82E+00	2.42E+00	2.76E+01	4.70E+00	0.00E-01	0.00E-01
TE129M	6.47E+02	1.53E+04	4.09E+03	1.52E+03	1.71E+04	1.32E+03	0.00E-01	0.00E-01
TE129	1.65E-06	3.70E-05	6.77E-06	2.52E-06	2.84E-05	4.83E-06	0.00E-01	0.00E-01
TE131M	1.43E+02	1.38E+04	3.59E+02	1.72E+02	1.79E+03	2.59E+02	0.00E-01	0.00E-01
TE131	0.00E-01	0.00E-01	0.00E-01	0.00E-01	0.00E-01	0.00E-01	0.00E-01	0.00E-01
TE132	4.30E+02	1.45E+04	7.22E+02	4.57E+02	4.39E+03	4.82E+02	0.00E-01	0.00E-01
I 130	7.91E+01	1.52E+02	6.85E+01	1.98E+02	3.05E+02	1.62E+04	0.00E-01	0.00E-01
I 131	1.03E+03	3.80E+02	1.37E+03	1.92E+03	3.31E+03	5.61E+05	0.00E-01	0.00E-01
I 132	4.85E-02	5.89E-02	5.16E-02	1.35E-01	2.13E-01	4.55E+00	0.00E-01	0.00E-01
I 133	1.20E+02	2.97E+02	2.31E+02	3.92E+02	6.88E+02	5.48E+04	0.00E-01	0.00E-01
I 134	1.98E-07	7.25E-09	2.08E-07	5.50E-07	8.68E-07	9.17E-06	0.00E-01	0.00E-01
I 135	1.19E+01	3.57E+01	1.25E+01	3.22E+01	5.09E+01	2.07E+03	0.00E-01	0.00E-01
CS134	2.34E+04	6.26E+02	2.14E+04	5.04E+04	1.60E+04	0.00E-01	6.11E+03	0.00E-01
CS136	5.51E+03	6.60E+02	2.08E+03	8.20E+03	4.47E+03	0.00E-01	7.04E+02	0.00E-01
CS137	1.33E+04	5.42E+02	2.87E+04	3.81E+04	1.30E+04	0.00E-01	5.04E+03	0.00E-01
CS138	0.00E-01	0.00E-01	0.00E-01	0.00E-01	0.00E-01	0.00E-01	0.00E-01	0.00E-01
BA139	5.79E-06	1.77E-03	1.99E-04	1.40E-07	1.32E-07	0.00E-01	9.63E-08	0.00E-01
BA140	4.44E+02	1.06E+04	6.88E+03	8.44E+00	2.86E+00	0.00E-01	5.67E+00	0.00E-01
BA141	0.00E-01	0.00E-01	0.00E-01	0.00E-01	0.00E-01	0.00E-01	0.00E-01	0.00E-01
BA142	0.00E-01	0.00E-01	0.00E-01	0.00E-01	0.00E-01	0.00E-01	0.00E-01	0.00E-01
LA140	7.71E-02	1.66E+04	5.89E-01	2.90E-01	0.00E-01	0.00E-01	0.00E-01	0.00E-01
LA142	1.03E-07	1.26E-02	9.35E-07	4.15E-07	0.00E-01	0.00E-01	0.00E-01	0.00E-01
CE141	2.55E-01	6.36E+03	3.33E+00	2.22E+00	1.05E+00	0.00E-01	0.00E-01	0.00E-01
CE143	2.96E-02	7.96E+03	3.64E-01	2.65E+02	1.19E-01	0.00E-01	0.00E-01	0.00E-01
CE144	9.55E+00	4.47E+04	1.78E+02	7.35E+01	4.39E+01	0.00E-01	0.00E-01	0.00E-01
PR143	1.59E-01	1.05E+04	3.19E+00	1.27E+00	7.39E-01	0.00E-01	0.00E-01	0.00E-01
PR144	0.00E-01	0.00E-01	0.00E-01	0.00E-01	0.00E-01	0.00E-01	0.00E-01	0.00E-01
ND147	1.47E-01	8.85E+03	2.26E+00	2.45E+00	1.44E+00	0.00E-01	0.00E-01	0.00E-01
W 187	5.32E+00	4.11E+03	1.86E+01	1.52E+01	0.00E-01	0.00E-01	0.00E-01	0.00E-01
NP239	1.76E-02	5.09E+03	3.36E-01	3.17E-02	9.94E-02	0.00E-01	0.00E-01	0.00E-01

DOSE TRANSFER FACTORS FOR RADIONUCLIDES IN EFFLUENT WATER

AGE = TEENAGER
PATHWAY = FRESH WATER FISH

	TOTAL BODY	GI-LLI	BONE	LIVER	KIDNEY	THYROID	LUNG	SKIN
				(mrem gal)/(Ci min)				
H 3	4.36E-01	4.36E-01	0.00E-01	4.36E-01	4.36E-01	4.36E-01	4.36E-01	0.00E-01
C 14	3.00E+04	3.00E+04	1.50E+05	3.00E+04	3.00E+04	3.00E+04	3.00E+04	0.00E-01
NA 24	6.08E+02	6.08E+02	6.08E+02	6.08E+02	6.08E+02	6.08E+02	6.08E+02	0.00E-01
P 32	8.18E+06	1.77E+07	2.11E+08	1.31E+07	0.00E-01	0.00E-01	0.00E-01	0.00E-01
CR 51	5.64E+00	9.47E+02	0.00E-01	0.00E-01	1.24E+00	3.13E+00	8.05E+00	0.00E-01
MN 54	3.75E+03	3.88E+04	0.00E-01	1.89E+04	5.64E+03	0.00E-01	0.00E-01	0.00E-01
MN 56	1.35E-01	4.99E+01	0.00E-01	7.57E-01	9.59E-01	0.00E-01	0.00E-01	0.00E-01
FE 55	5.01E+02	9.31E+02	3.03E+03	2.15E+03	0.00E-01	0.00E-01	1.36E+03	0.00E-01
FE 59	4.18E+03	2.56E+04	4.64E+03	1.08E+04	0.00E-01	0.00E-01	3.41E+03	0.00E-01
CO 58	8.90E+02	5.33E+03	0.00E-01	3.86E+02	0.00E-01	0.00E-01	0.00E-01	0.00E-01
CO 60	2.54E+03	1.47E+04	0.00E-01	1.13E+03	0.00E-01	0.00E-01	0.00E-01	0.00E-01
NI 63	4.82E+03	1.60E+03	1.42E+05	1.00E+04	0.00E-01	0.00E-01	0.00E-01	0.00E-01
NI 65	4.63E-02	5.51E+00	7.95E-01	1.02E-01	0.00E-01	0.00E-01	0.00E-01	0.00E-01
CU 64	5.81E+00	9.58E+02	0.00E-01	1.24E+01	3.12E+01	0.00E-01	0.00E-01	0.00E-01
ZN 65	1.49E+05	1.36E+05	9.22E+04	3.20E+05	2.05E+05	0.00E-01	0.00E-01	0.00E-01
ZN 69	7.06E-07	1.86E-05	5.30E-06	1.01E-05	6.59E-06	0.00E-01	0.00E-01	0.00E-01
BR 83	1.79E-01	0.00E-01	0.00E-01	0.00E-01	0.00E-01	0.00E-01	0.00E-01	0.00E-01
BR 84	0.00E-01	0.00E-01	0.00E-01	0.00E-01	0.00E-01	0.00E-01	0.00E-01	0.00E-01
BR 85	0.00E-01	0.00E-01	0.00E-01	0.00E-01	0.00E-01	0.00E-01	0.00E-01	0.00E-01
RB 86	2.17E+05	6.82E+04	0.00E-01	4.61E+05	0.00E-01	0.00E-01	0.00E-01	0.00E-01
RB 88	0.00E-01	0.00E-01	0.00E-01	0.00E-01	0.00E-01	0.00E-01	0.00E-01	0.00E-01
RB 89	0.00E-01	0.00E-01	0.00E-01	0.00E-01	0.00E-01	0.00E-01	0.00E-01	0.00E-01
SR 89	2.99E+03	1.24E+04	1.04E+05	0.00E-01	0.00E-01	0.00E-01	0.00E-01	0.00E-01
SR 90	4.91E+04	5.61E+04	2.46E+06	0.00E-01	0.00E-01	0.00E-01	0.00E-01	0.00E-01
SR 91	1.33E+01	1.51E+03	3.34E+02	0.00E-01	0.00E-01	0.00E-01	0.00E-01	0.00E-01
SR 92	6.61E-02	3.95E+01	1.55E+00	0.00E-01	0.00E-01	0.00E-01	0.00E-01	0.00E-01
Y 90	5.71E-02	1.75E+04	2.12E+00	0.00E-01	0.00E-01	0.00E-01	0.00E-01	0.00E-01
Y 91M	0.00E-01	0.00E-01	0.00E-01	0.00E-01	0.00E-01	0.00E-01	0.00E-01	0.00E-01
Y 91	1.07E+00	1.63E+04	3.99E+01	0.00E-01	0.00E-01	0.00E-01	0.00E-01	0.00E-01
Y 92	6.37E-05	6.05E+01	2.20E-03	0.00E-01	0.00E-01	0.00E-01	0.00E-01	0.00E-01
Y 93	4.02E-03	4.48E+03	1.47E-01	0.00E-01	0.00E-01	0.00E-01	0.00E-01	0.00E-01
ZR 95	2.34E-01	7.86E+02	1.08E+00	3.41E-01	5.01E-01	0.00E-01	0.00E-01	0.00E-01
ZR 97	2.13E-03	1.25E+03	2.34E-02	4.62E-03	7.01E-03	0.00E-01	0.00E-01	0.00E-01
NB 95	5.93E+02	4.60E+06	1.94E+03	1.08E+03	1.04E+03	0.00E-01	0.00E-01	0.00E-01
MO 99	7.17E+01	6.73E+02	0.00E-01	3.76E+02	8.60E+02	0.00E-01	0.00E-01	0.00E-01
TC 99M	9.00E-02	4.56E+00	2.49E-03	6.94E-03	1.04E-01	0.00E-01	3.85E-03	0.00E-01
TC101	0.00E-01	0.00E-01	0.00E-01	0.00E-01	0.00E-01	0.00E-01	0.00E-01	0.00E-01

DOSE TRANSFER FACTORS FOR RADIONUCLIDES IN EFFLUENT WATER

AGE = TEENAGER
PATHWAY = FRESH WATER FISH

	TOTAL BODY	GI-LLI	BONE	LIVER	KIDNEY	THYROID	LUNG	SKIN
				(mrem gal)/(Ci min)				
RU103	8.60E+00	1.68E+03	2.01E+01	0.00E-01	7.09E+01	0.00E-01	0.00E-01	0.00E-01
RU105	1.57E-02	3.27E+01	4.05E-02	0.00E-01	5.11E-01	0.00E-01	0.00E-01	0.00E-01
RU106	3.96E+01	1.51E+04	3.14E+02	0.00E-01	6.06E+02	0.00E-01	0.00E-01	0.00E-01
AG110M	2.17E+00	1.00E+03	3.78E+00	3.57E+00	6.81E+00	0.00E-01	0.00E-01	0.00E-01
TE125M	1.62E+03	3.59E+04	1.21E+04	4.38E+03	0.00E-01	3.39E+03	0.00E-01	0.00E-01
TE127M	3.67E+03	7.69E+04	3.09E+04	1.09E+04	1.25E+05	7.34E+03	0.00E-01	0.00E-01
TE127	1.83E+01	6.56E+03	8.49E+01	3.01E+01	3.44E+02	5.86E+01	0.00E-01	0.00E-01
TE129M	8.12E+03	1.92E+05	5.13E+04	1.90E+04	2.14E+05	1.65E+04	0.00E-01	0.00E-01
TE129	1.95E-05	4.38E-04	8.00E-05	2.98E-05	3.36E-04	5.72E-05	0.00E-01	0.00E-01
TE131M	1.80E+03	1.73E+05	4.49E+03	2.15E+03	2.24E+04	3.24E+03	0.00E-01	0.00E-01
TE131	0.00E-01	0.00E-01	0.00E-01	0.00E-01	0.00E-01	0.00E-01	0.00E-01	0.00E-01
TE132	5.40E+03	1.82E+05	9.05E+03	5.73E+03	5.50E+04	6.04E+03	0.00E-01	0.00E-01
I 130	3.70E+01	7.12E+01	3.20E+01	9.27E+01	1.43E+02	7.56E+03	0.00E-01	0.00E-01
I 131	4.86E+02	1.79E+02	6.46E+02	9.04E+02	1.56E+03	2.64E+05	0.00E-01	0.00E-01
I 132	2.21E-02	2.69E-02	2.36E-02	6.17E-02	9.72E-02	2.08E+00	0.00E-01	0.00E-01
I 133	5.61E+01	1.39E+02	1.08E+02	1.84E+02	3.23E+02	2.57E+04	0.00E-01	0.00E-01
I 134	8.60E-08	3.15E-09	9.03E-08	2.39E-07	3.77E-07	3.99E-06	0.00E-01	0.00E-01
I 135	5.56E+00	1.66E+01	5.83E+00	1.50E+01	2.37E+01	9.66E+02	0.00E-01	0.00E-01
CS134	1.47E+06	3.93E+04	1.34E+06	3.16E+06	1.00E+06	0.00E-01	3.83E+05	0.00E-01
CS136	3.46E+05	4.14E+04	1.31E+05	5.15E+05	2.80E+05	0.00E-01	4.42E+04	0.00E-01
CS137	8.33E+05	3.40E+04	1.80E+06	2.39E+06	8.14E+05	0.00E-01	3.16E+05	0.00E-01
CS138	0.00E-01	0.00E-01	0.00E-01	0.00E-01	0.00E-01	0.00E-01	0.00E-01	0.00E-01
BA139	6.90E-07	2.11E-04	2.37E-05	1.67E-08	1.57E-08	0.00E-01	1.15E-08	0.00E-01
BA140	5.57E+01	1.33E+03	8.64E+02	1.06E+00	3.59E-01	0.00E-01	7.12E-01	0.00E-01
BA141	0.00E-01	0.00E-01	0.00E-01	0.00E-01	0.00E-01	0.00E-01	0.00E-01	0.00E-01
BA142	0.00E-01	0.00E-01	0.00E-01	0.00E-01	0.00E-01	0.00E-01	0.00E-01	0.00E-01
LA140	6.03E-02	1.30E+04	4.61E-01	2.27E-01	0.00E-01	0.00E-01	0.00E-01	0.00E-01
LA142	7.75E-08	9.47E-03	7.01E-07	3.11E-07	0.00E-01	0.00E-01	0.00E-01	0.00E-01
CE141	8.02E-03	2.00E+02	1.05E-01	6.98E-02	3.29E-02	0.00E-01	0.00E-01	0.00E-01
CE143	9.26E-04	2.49E+02	1.14E-02	8.29E+00	3.72E-03	0.00E-01	0.00E-01	0.00E-01
CE144	2.99E-01	1.40E+03	5.57E+00	2.31E+00	1.38E+00	0.00E-01	0.00E-01	0.00E-01
PR143	1.24E-01	8.22E+03	2.50E+00	9.97E-01	5.80E-01	0.00E-01	0.00E-01	0.00E-01
PR144	0.00E-01	0.00E-01	0.00E-01	0.00E-01	0.00E-01	0.00E-01	0.00E-01	0.00E-01
ND147	1.15E-01	6.94E+03	1.77E+00	1.92E+00	1.13E+00	0.00E-01	0.00E-01	0.00E-01
W 187	2.00E+02	1.54E+05	7.00E+02	5.70E+02	0.00E-01	0.00E-01	0.00E-01	0.00E-01
NP239	5.51E-03	1.60E+03	1.05E-01	9.92E-03	3.11E-02	0.00E-01	0.00E-01	0.00E-01

DOSE TRANSFER FACTORS FOR RADIONUCLIDES IN EFFLUENT WATER

AGE = TEENAGER
PATHWAY = FRESH WATER INVERTEBRATES

	TOTAL BODY	GI-LLI	BONE	LIVER	KIDNEY	THYROID	LUNG	SKIN
				(mrem gal)/(Ci min)				
H 3	1.04E-01	1.04E-01	0.00E-01	1.04E-01	1.04E-01	1.04E-01	1.04E-01	0.00E-01
C 14	1.41E+04	1.41E+04	7.04E+04	1.41E+04	1.41E+04	1.41E+04	1.41E+04	0.00E-01
NA 24	2.89E+02	2.89E+02	2.89E+02	2.89E+02	2.89E+02	2.89E+02	2.89E+02	0.00E-01
P 32	3.89E+05	8.43E+05	1.00E+07	6.21E+05	0.00E-01	0.00E-01	0.00E-01	0.00E-01
CR 51	1.34E+01	2.25E+03	0.00E-01	0.00E-01	2.93E+00	7.44E+00	1.91E+01	0.00E-01
MN 54	2.00E+05	2.07E+06	0.00E-01	1.01E+06	3.01E+05	0.00E-01	0.00E-01	0.00E-01
MN 56	7.20E+00	2.66E+03	0.00E-01	4.05E+01	5.12E+01	0.00E-01	0.00E-01	0.00E-01
FE 55	3.81E+03	7.07E+03	2.30E+04	1.63E+04	0.00E-01	0.00E-01	1.04E+04	0.00E-01
FE 59	3.18E+04	1.95E+05	3.53E+04	8.23E+04	0.00E-01	0.00E-01	2.59E+04	0.00E-01
CO 58	8.46E+02	5.06E+03	0.00E-01	3.67E+02	0.00E-01	0.00E-01	0.00E-01	0.00E-01
CO 60	2.41E+03	1.39E+04	0.00E-01	1.07E+03	0.00E-01	0.00E-01	0.00E-01	0.00E-01
NI 63	1.14E+03	3.79E+02	3.37E+04	2.38E+03	0.00E-01	0.00E-01	0.00E-01	0.00E-01
NI 65	1.10E-02	1.31E+00	1.89E-01	2.41E-02	0.00E-01	0.00E-01	0.00E-01	0.00E-01
CU 64	1.10E+01	1.82E+03	0.00E-01	2.35E+01	5.94E+01	0.00E-01	0.00E-01	0.00E-01
ZN 65	1.77E+05	1.61E+05	1.09E+05	3.80E+05	2.43E+05	0.00E-01	0.00E-01	0.00E-01
ZN 69	8.39E-07	2.21E-05	6.29E-06	1.20E-05	7.83E-06	0.00E-01	0.00E-01	0.00E-01
BR 83	3.35E-02	0.00E-01	0.00E-01	0.00E-01	0.00E-01	0.00E-01	0.00E-01	0.00E-01
BR 84	0.00E-01	0.00E-01	0.00E-01	0.00E-01	0.00E-01	0.00E-01	0.00E-01	0.00E-01
BR 85	0.00E-01	0.00E-01	0.00E-01	0.00E-01	0.00E-01	0.00E-01	0.00E-01	0.00E-01
RB 86	2.57E+04	8.10E+03	0.00E-01	5.47E+04	0.00E-01	0.00E-01	0.00E-01	0.00E-01
RB 88	0.00E-01	0.00E-01	0.00E-01	0.00E-01	0.00E-01	0.00E-01	0.00E-01	0.00E-01
RB 89	0.00E-01	0.00E-01	0.00E-01	0.00E-01	0.00E-01	0.00E-01	0.00E-01	0.00E-01
SR 89	2.37E+03	9.85E+03	8.27E+04	0.00E-01	0.00E-01	0.00E-01	0.00E-01	0.00E-01
SR 90	3.89E+04	4.44E+04	1.94E+06	0.00E-01	0.00E-01	0.00E-01	0.00E-01	0.00E-01
SR 91	1.05E+01	1.20E+03	2.64E+02	0.00E-01	0.00E-01	0.00E-01	0.00E-01	0.00E-01
SR 92	5.24E-02	3.13E+01	1.23E+00	0.00E-01	0.00E-01	0.00E-01	0.00E-01	0.00E-01
Y 90	5.42E-01	1.66E+05	2.01E+01	0.00E-01	0.00E-01	0.00E-01	0.00E-01	0.00E-01
Y 91M	0.00E-01	0.00E-01	0.00E-01	0.00E-01	0.00E-01	0.00E-01	0.00E-01	0.00E-01
Y 91	1.02E+01	1.55E+05	3.79E+02	0.00E-01	0.00E-01	0.00E-01	0.00E-01	0.00E-01
Y 92	6.06E-04	5.74E+02	2.09E-02	0.00E-01	0.00E-01	0.00E-01	0.00E-01	0.00E-01
Y 93	3.82E-02	4.25E+04	1.39E+00	0.00E-01	0.00E-01	0.00E-01	0.00E-01	0.00E-01
ZR 95	1.13E-01	3.79E+02	5.21E-01	1.64E-01	2.41E-01	0.00E-01	0.00E-01	0.00E-01
ZR 97	1.03E-03	6.03E+02	1.13E-02	2.23E-03	3.38E-03	0.00E-01	0.00E-01	0.00E-01
NB 95	4.69E-01	3.64E+03	1.54E+00	8.53E-01	8.26E-01	0.00E-01	0.00E-01	0.00E-01
MO 99	1.70E+01	1.60E+02	0.00E-01	8.92E+01	2.04E+02	0.00E-01	0.00E-01	0.00E-01
TC 99M	7.12E-03	3.61E-01	1.97E-04	5.50E-04	8.19E-03	0.00E-01	3.05E-04	0.00E-01
TC101	0.00E-01	0.00E-01	0.00E-01	0.00E-01	0.00E-01	0.00E-01	0.00E-01	0.00E-01

DOSE TRANSFER FACTORS FOR RADIONUCLIDES IN EFFLUENT WATER

AGE = TEENAGER
PATHWAY = FRESH WATER INVERTEBRATES

	TOTAL BODY	GI-LLI	BONE	LIVER	KIDNEY	THYROID	LUNG	SKIN
				(mrem gal)/(Ci min)				
RU103	6.13E+01	1.20E+04	1.43E+02	0.00E-01	5.05E+02	0.00E-01	0.00E-01	0.00E-01
RU105	1.12E-01	2.33E+02	2.89E-01	0.00E-01	3.64E+00	0.00E-01	0.00E-01	0.00E-01
RU106	2.82E+02	1.07E+05	2.24E+03	0.00E-01	4.32E+03	0.00E-01	0.00E-01	0.00E-01
AG110M	1.73E+02	7.98E+04	3.00E+02	2.84E+02	5.42E+02	0.00E-01	0.00E-01	0.00E-01
TE125M	5.88E+03	1.30E+05	4.40E+04	1.59E+04	0.00E-01	1.23E+04	0.00E-01	0.00E-01
TE127M	1.33E+04	2.78E+05	1.12E+05	3.96E+04	4.53E+05	2.66E+04	0.00E-01	0.00E-01
TE127	6.62E+01	2.38E+04	3.08E+02	1.09E+02	1.25E+03	2.12E+02	0.00E-01	0.00E-01
TE129M	2.94E+04	6.97E+05	1.86E+05	6.89E+04	7.77E+05	5.99E+04	0.00E-01	0.00E-01
TE129	7.05E-05	1.58E-03	2.90E-04	1.08E-04	1.22E-03	2.07E-04	0.00E-01	0.00E-01
TE131M	6.50E+03	6.26E+05	1.63E+04	7.80E+03	8.13E+04	1.17E+04	0.00E-01	0.00E-01
TE131	0.00E-01	0.00E-01	0.00E-01	0.00E-01	0.00E-01	0.00E-01	0.00E-01	0.00E-01
TE132	1.95E+04	6.58E+05	3.28E+04	2.08E+04	1.99E+05	2.19E+04	0.00E-01	0.00E-01
I 130	2.93E+00	5.64E+00	2.54E+00	7.34E+00	1.13E+01	5.98E+02	0.00E-01	0.00E-01
I 131	3.85E+01	1.42E+01	5.12E+01	7.16E+01	1.23E+02	2.09E+04	0.00E-01	0.00E-01
I 132	1.75E-03	2.13E-03	1.87E-03	4.89E-03	7.70E-03	1.65E-01	0.00E-01	0.00E-01
I 133	4.44E+00	1.10E+01	8.59E+00	1.46E+01	2.55E+01	2.03E+03	0.00E-01	0.00E-01
I 134	6.81E-09	2.50E-10	7.15E-09	1.90E-08	2.99E-08	3.16E-07	0.00E-01	0.00E-01
I 135	4.40E-01	1.32E+00	4.62E-01	1.19E+00	1.88E+00	7.64E+01	0.00E-01	0.00E-01
CS134	1.74E+05	4.67E+03	1.59E+05	3.75E+05	1.19E+05	0.00E-01	4.55E+04	0.00E-01
CS136	4.10E+04	4.92E+03	1.55E+04	6.11E+04	3.33E+04	0.00E-01	5.24E+03	0.00E-01
CS137	9.90E+04	4.04E+03	2.13E+05	2.84E+05	9.67E+04	0.00E-01	3.76E+04	0.00E-01
CS138	0.00E-01	0.00E-01	0.00E-01	0.00E-01	0.00E-01	0.00E-01	0.00E-01	0.00E-01
BA139	8.20E-06	2.51E-03	2.81E-04	1.98E-07	1.87E-07	0.00E-01	1.36E-07	0.00E-01
BA140	6.61E+02	1.58E+04	1.03E+04	1.26E+01	4.26E+00	0.00E-01	8.45E+00	0.00E-01
BA141	0.00E-01	0.00E-01	0.00E-01	0.00E-01	0.00E-01	0.00E-01	0.00E-01	0.00E-01
BA142	0.00E-01	0.00E-01	0.00E-01	0.00E-01	0.00E-01	0.00E-01	0.00E-01	0.00E-01
LA140	5.73E-01	1.24E+05	4.38E+00	2.15E+00	0.00E-01	0.00E-01	0.00E-01	0.00E-01
LA142	7.36E-07	9.00E-02	6.66E-06	2.96E-06	0.00E-01	0.00E-01	0.00E-01	0.00E-01
CE141	1.90E+00	4.74E+04	2.48E+01	1.66E+01	7.80E+00	0.00E-01	0.00E-01	0.00E-01
CE143	2.20E-01	5.92E+04	2.71E+00	1.97E+03	8.83E-01	0.00E-01	0.00E-01	0.00E-01
CE144	7.11E+01	3.33E+05	1.32E+03	5.48E+02	3.27E+02	0.00E-01	0.00E-01	0.00E-01
PR143	1.18E+00	7.81E+04	2.37E+01	9.48E+00	5.51E+00	0.00E-01	0.00E-01	0.00E-01
PR144	0.00E-01	0.00E-01	0.00E-01	0.00E-01	0.00E-01	0.00E-01	0.00E-01	0.00E-01
ND147	1.09E+00	6.59E+04	1.68E+01	1.83E+01	1.07E+01	0.00E-01	0.00E-01	0.00E-01
W 187	3.96E-01	3.05E+02	1.38E+00	1.13E+00	0.00E-01	0.00E-01	0.00E-01	0.00E-01
NP239	5.24E-02	1.52E+04	9.99E-01	9.43E-02	2.96E-01	0.00E-01	0.00E-01	0.00E-01

DOSE TRANSFER FACTORS FOR RADIONUCLIDES IN EFFLUENT WATER

AGE = TEENAGER
PATHWAY = IRRIGATED FRESH LEAFY VEGETABLES

	TOTAL BODY	GI-LLI	BONE	LIVER	KIDNEY	THYROID	LUNG	SKIN
				(mrem gal)/(Ci min)				
H 3	1.27E+00	1.27E+00	0.00E-01	1.27E+00	1.27E+00	1.27E+00	1.27E+00	0.00E-01
C 14	1.90E+03	1.90E+03	9.50E+03	1.90E+03	1.90E+03	1.90E+03	1.90E+03	0.00E-01
NA 24	5.53E+00	5.53E+00	5.53E+00	5.53E+00	5.53E+00	5.53E+00	5.53E+00	0.00E-01
P 32	9.26E+02	2.01E+03	2.39E+04	1.48E+03	0.00E-01	0.00E-01	0.00E-01	0.00E-01
CR 51	4.08E-01	6.86E+01	0.00E-01	0.00E-01	8.95E-02	2.27E-01	5.83E-01	0.00E-01
MN 54	1.90E+02	1.97E+03	0.00E-01	9.60E+02	2.86E+02	0.00E-01	0.00E-01	0.00E-01
MN 56	4.43E-05	1.64E-02	0.00E-01	2.49E-04	3.15E-04	0.00E-01	0.00E-01	0.00E-01
FE 55	1.04E+02	1.93E+02	6.28E+02	4.46E+02	0.00E-01	0.00E-01	2.83E+02	0.00E-01
FE 59	6.88E+02	4.22E+03	7.64E+02	1.78E+03	0.00E-01	0.00E-01	5.62E+02	0.00E-01
CO 58	3.19E+02	1.91E+03	0.00E-01	1.39E+02	0.00E-01	0.00E-01	0.00E-01	0.00E-01
CO 60	1.07E+03	6.18E+03	0.00E-01	4.74E+02	0.00E-01	0.00E-01	0.00E-01	0.00E-01
NI 63	1.05E+03	3.49E+02	3.10E+04	2.19E+03	0.00E-01	0.00E-01	0.00E-01	0.00E-01
NI 65	5.94E-05	7.08E-03	1.02E-03	1.31E-04	0.00E-01	0.00E-01	0.00E-01	0.00E-01
CU 64	8.88E-02	1.46E+01	0.00E-01	1.89E-01	4.78E-01	0.00E-01	0.00E-01	0.00E-01
ZN 65	1.59E+03	1.44E+03	9.80E+02	3.40E+03	2.18E+03	0.00E-01	0.00E-01	0.00E-01
ZN 69	1.14E-11	3.01E-10	8.56E-11	1.63E-10	1.07E-10	0.00E-01	0.00E-01	0.00E-01
BR 83	5.17E-05	0.00E-01	0.00E-01	0.00E-01	0.00E-01	0.00E-01	0.00E-01	0.00E-01
BR 84	1.32E-16	0.00E-01	0.00E-01	0.00E-01	0.00E-01	0.00E-01	0.00E-01	0.00E-01
BR 85	3.39E-37	0.00E-01	0.00E-01	0.00E-01	0.00E-01	0.00E-01	0.00E-01	0.00E-01
RB 86	1.36E+03	4.29E+02	0.00E-01	2.90E+03	0.00E-01	0.00E-01	0.00E-01	0.00E-01
RB 88	3.67E-28	5.90E-35	0.00E-01	6.88E-28	0.00E-01	0.00E-01	0.00E-01	0.00E-01
RB 89	3.00E-30	6.50E-39	0.00E-01	4.24E-30	0.00E-01	0.00E-01	0.00E-01	0.00E-01
SR 89	1.70E+03	7.07E+03	5.93E+04	0.00E-01	0.00E-01	0.00E-01	0.00E-01	0.00E-01
SR 90	4.78E+04	5.46E+04	2.39E+06	0.00E-01	0.00E-01	0.00E-01	0.00E-01	0.00E-01
SR 91	2.52E-01	2.87E+01	6.33E+00	0.00E-01	0.00E-01	0.00E-01	0.00E-01	0.00E-01
SR 92	3.10E-04	1.85E-01	7.28E-03	0.00E-01	0.00E-01	0.00E-01	0.00E-01	0.00E-01
Y 90	8.01E-03	2.45E+03	2.98E-01	0.00E-01	0.00E-01	0.00E-01	0.00E-01	0.00E-01
Y 91M	1.68E-15	2.07E-12	4.39E-14	0.00E-01	0.00E-01	0.00E-01	0.00E-01	0.00E-01
Y 91	7.43E-01	1.14E+04	2.77E+01	0.00E-01	0.00E-01	0.00E-01	0.00E-01	0.00E-01
Y 92	4.94E-07	4.69E-01	1.71E-05	0.00E-01	0.00E-01	0.00E-01	0.00E-01	0.00E-01
Y 93	9.72E-05	1.08E+02	3.55E-03	0.00E-01	0.00E-01	0.00E-01	0.00E-01	0.00E-01
ZR 95	1.25E+00	4.20E+03	5.77E+00	1.82E+00	2.68E+00	0.00E-01	0.00E-01	0.00E-01
ZR 97	6.57E-04	3.86E+02	7.21E-03	1.43E-03	2.16E-03	0.00E-01	0.00E-01	0.00E-01
NB 95	3.07E-01	2.39E+03	1.01E+00	5.58E-01	5.41E-01	0.00E-01	0.00E-01	0.00E-01
MO 99	2.58E+01	2.42E+02	0.00E-01	1.35E+02	3.09E+02	0.00E-01	0.00E-01	0.00E-01
TC 99M	2.11E-03	1.07E-01	5.83E-05	1.63E-04	2.42E-03	0.00E-01	9.02E-05	0.00E-01
TC101	2.94E-31	5.11E-39	2.10E-32	2.99E-32	5.41E-31	0.00E-01	1.82E-32	0.00E-01

DOSE TRANSFER FACTORS FOR RADIONUCLIDES IN EFFLUENT WATER

AGE = TEENAGER
PATHWAY = IRRIGATED FRESH LEAFY VEGETABLES

	TOTAL BODY	GI-LLI	BONE	LIVER	KIDNEY	THYROID	LUNG	SKIN
				(mrem gal)/(Ci min)				
RU103	1.38E+01	2.69E+03	3.22E+01	0.00E-01	1.14E+02	0.00E-01	0.00E-01	0.00E-01
RU105	3.94E-04	8.19E-01	1.01E-03	0.00E-01	1.28E-02	0.00E-01	0.00E-01	0.00E-01
RU106	8.13E+01	3.10E+04	6.45E+02	0.00E-01	1.24E+03	0.00E-01	0.00E-01	0.00E-01
AG110M	1.94E+01	8.95E+03	3.37E+01	3.19E+01	6.07E+01	0.00E-01	0.00E-01	0.00E-01
TE125M	7.45E+01	1.64E+03	5.57E+02	2.01E+02	0.00E-01	1.56E+02	0.00E-01	0.00E-01
TE127M	1.90E+02	3.98E+03	1.60E+03	5.67E+02	6.48E+03	3.80E+02	0.00E-01	0.00E-01
TE127	2.58E-02	9.27E+00	1.20E-01	4.26E-02	4.86E-01	8.28E-02	0.00E-01	0.00E-01
TE129M	3.23E+02	7.66E+03	2.04E+03	7.57E+02	8.53E+03	6.58E+02	0.00E-01	0.00E-01
TE129	2.18E-09	4.91E-08	8.97E-09	3.35E-09	3.77E-08	6.41E-09	0.00E-01	0.00E-01
TE131M	8.05E+00	7.75E+02	2.01E+01	9.65E+00	1.01E+02	1.45E+01	0.00E-01	0.00E-01
TE131	1.86E-21	4.88E-22	5.94E-21	2.45E-21	2.60E-20	4.58E-21	0.00E-01	0.00E-01
TE132	5.66E+01	1.90E+03	9.50E+01	6.01E+01	5.77E+02	6.34E+01	0.00E-01	0.00E-01
I 130	1.84E+00	3.54E+00	1.59E+00	4.60E+00	7.09E+00	3.75E+02	0.00E-01	0.00E-01
I 131	2.60E+02	9.58E+01	3.46E+02	4.84E+02	8.34E+02	1.41E+05	0.00E-01	0.00E-01
I 132	1.69E-04	2.05E-04	1.80E-04	4.71E-04	7.42E-04	1.59E-02	0.00E-01	0.00E-01
I 133	4.68E+00	1.16E+01	9.05E+00	1.54E+01	2.69E+01	2.14E+03	0.00E-01	0.00E-01
I 134	1.61E-10	5.92E-12	1.69E-10	4.49E-10	7.08E-10	7.48E-09	0.00E-01	0.00E-01
I 135	1.44E-01	4.29E-01	1.50E-01	3.87E-01	6.12E-01	2.49E+01	0.00E-01	0.00E-01
CS134	1.52E+04	4.07E+02	1.39E+04	3.28E+04	1.04E+04	0.00E-01	3.97E+03	0.00E-01
CS136	1.84E+03	2.20E+02	6.96E+02	2.74E+03	1.49E+03	0.00E-01	2.35E+02	0.00E-01
CS137	8.90E+03	3.63E+02	1.92E+04	2.55E+04	8.69E+03	0.00E-01	3.38E+03	0.00E-01
CS138	2.15E-16	1.95E-19	2.24E-16	4.29E-16	3.17E-16	0.00E-01	3.69E-17	0.00E-01
BA139	9.87E-09	3.02E-06	3.39E-07	2.38E-10	2.25E-10	0.00E-01	1.64E-10	0.00E-01
BA140	1.46E+02	3.50E+03	2.27E+03	2.78E+00	9.43E-01	0.00E-01	1.87E+00	0.00E-01
BA141	7.14E-29	4.56E-33	2.14E-27	1.60E-30	1.48E-30	0.00E-01	1.09E-30	0.00E-01
BA142	3.10E-32	1.55E-42	5.04E-31	5.04E-34	4.27E-34	0.00E-01	3.36E-34	0.00E-01
LA140	5.62E-03	1.21E+03	4.30E-02	2.11E-02	0.00E-01	0.00E-01	0.00E-01	0.00E-01
LA142	2.08E-10	2.55E-05	1.88E-09	8.37E-10	0.00E-01	0.00E-01	0.00E-01	0.00E-01
CE141	1.22E-01	3.04E+03	1.59E+00	1.06E+00	5.00E-01	0.00E-01	0.00E-01	0.00E-01
CE143	1.80E-03	4.85E+02	2.22E-02	1.61E+01	7.24E-03	0.00E-01	0.00E-01	0.00E-01
CE144	6.03E+00	2.82E+04	1.12E+02	4.64E+01	2.77E+01	0.00E-01	0.00E-01	0.00E-01
PR143	5.39E-02	3.56E+03	1.08E+00	4.32E-01	2.51E-01	0.00E-01	0.00E-01	0.00E-01
PR144	2.35E-33	5.11E-35	4.63E-32	1.90E-32	1.09E-32	0.00E-01	0.00E-01	0.00E-01
ND147	4.48E-02	2.70E+03	6.88E-01	7.49E-01	4.40E-01	0.00E-01	0.00E-01	0.00E-01
W 187	2.38E-01	1.84E+02	8.34E-01	6.80E-01	0.00E-01	0.00E-01	0.00E-01	0.00E-01
NP239	1.74E-03	5.03E+02	3.32E-02	3.13E-03	9.81E-03	0.00E-01	0.00E-01	0.00E-01

DOSE TRANSFER FACTORS FOR RADIONUCLIDES IN EFFLUENT WATER

AGE = TEENAGER
PATHWAY = IRRIGATED STORED FRUIT, VEGETABLES, GRAIN

	TOTAL BODY	GI-LLI	BONE	LIVER	KIDNEY	THYROID	LUNG	SKIN
				(mrem gal)/(Ci min)				
H 3	1.89E+01	1.89E+01	0.00E-01	1.89E+01	1.89E+01	1.89E+01	1.89E+01	0.00E-01
C 14	2.85E+04	2.85E+04	1.43E+05	2.85E+04	2.85E+04	2.85E+04	2.85E+04	0.00E-01
NA 24	2.19E-24	2.19E-24	2.19E-24	2.19E-24	2.19E-24	2.19E-24	2.19E-24	0.00E-01
P 32	7.96E+02	1.72E+03	2.05E+04	1.27E+03	0.00E-01	0.00E-01	0.00E-01	0.00E-01
CR 51	1.40E+00	2.35E+02	0.00E-01	0.00E-01	3.06E-01	7.76E-01	1.99E+00	0.00E-01
MN 54	2.50E+03	2.59E+04	0.00E-01	1.26E+04	3.77E+03	0.00E-01	0.00E-01	0.00E-01
MN 56	3.79E-27	1.40E-24	0.00E-01	2.13E-26	2.70E-26	0.00E-01	0.00E-01	0.00E-01
FE 55	1.49E+03	2.77E+03	9.04E+03	6.41E+03	0.00E-01	0.00E-01	4.07E+03	0.00E-01
FE 59	4.12E+03	2.53E+04	4.58E+03	1.07E+04	0.00E-01	0.00E-01	3.37E+03	0.00E-01
CO 58	2.69E+03	1.61E+04	0.00E-01	1.17E+03	0.00E-01	0.00E-01	0.00E-01	0.00E-01
CO 60	1.57E+04	9.07E+04	0.00E-01	6.97E+03	0.00E-01	0.00E-01	0.00E-01	0.00E-01
NI 63	1.58E+04	5.23E+03	4.65E+05	3.28E+04	0.00E-01	0.00E-01	0.00E-01	0.00E-01
NI 65	5.74E-27	6.84E-25	9.87E-26	1.26E-26	0.00E-01	0.00E-01	0.00E-01	0.00E-01
CU 64	4.34E-26	7.15E-24	0.00E-01	9.22E-26	2.33E-25	0.00E-01	0.00E-01	0.00E-01
ZN 65	2.01E+04	1.83E+04	1.24E+04	4.32E+04	2.76E+04	0.00E-01	0.00E-01	0.00E-01
ZN 69	6.21E-29	1.63E-27	4.66E-28	8.87E-28	5.80E-28	0.00E-01	0.00E-01	0.00E-01
BR 83	7.12E-27	0.00E-01	0.00E-01	0.00E-01	0.00E-01	0.00E-01	0.00E-01	0.00E-01
BR 84	7.22E-28	0.00E-01	0.00E-01	0.00E-01	0.00E-01	0.00E-01	0.00E-01	0.00E-01
BR 85	5.09E-36	0.00E-01	0.00E-01	0.00E-01	0.00E-01	0.00E-01	0.00E-01	0.00E-01
RB 86	2.29E+03	7.23E+02	0.00E-01	4.88E+03	0.00E-01	0.00E-01	0.00E-01	0.00E-01
RB 88	9.12E-29	1.47E-35	0.00E-01	1.71E-28	0.00E-01	0.00E-01	0.00E-01	0.00E-01
RB 89	4.50E-29	9.74E-38	0.00E-01	6.36E-29	0.00E-01	0.00E-01	0.00E-01	0.00E-01
SR 89	1.13E+04	4.71E+04	3.96E+05	0.00E-01	0.00E-01	0.00E-01	0.00E-01	0.00E-01
SR 90	7.14E+05	8.16E+05	3.57E+07	0.00E-01	0.00E-01	0.00E-01	0.00E-01	0.00E-01
SR 91	1.91E-25	2.18E-23	4.81E-24	0.00E-01	0.00E-01	0.00E-01	0.00E-01	0.00E-01
SR 92	1.88E-26	1.12E-23	4.41E-25	0.00E-01	0.00E-01	0.00E-01	0.00E-01	0.00E-01
Y 90	2.74E-08	8.40E-03	1.02E-06	0.00E-01	0.00E-01	0.00E-01	0.00E-01	0.00E-01
Y 91M	1.22E-31	1.50E-28	3.19E-30	0.00E-01	0.00E-01	0.00E-01	0.00E-01	0.00E-01
Y 91	5.54E+00	8.47E+04	2.07E+02	0.00E-01	0.00E-01	0.00E-01	0.00E-01	0.00E-01
Y 92	7.02E-30	6.66E-24	2.43E-28	0.00E-01	0.00E-01	0.00E-01	0.00E-01	0.00E-01
Y 93	6.65E-29	7.41E-23	2.43E-27	0.00E-01	0.00E-01	0.00E-01	0.00E-01	0.00E-01
ZR 95	9.94E+00	3.33E+04	4.58E+01	1.44E+01	2.12E+01	0.00E-01	0.00E-01	0.00E-01
ZR 97	5.70E-28	3.35E-22	6.25E-27	1.24E-27	1.88E-27	0.00E-01	0.00E-01	0.00E-01
NB 95	1.44E+00	1.12E+04	4.72E+00	2.62E+00	2.54E+00	0.00E-01	0.00E-01	0.00E-01
MO 99	1.33E-04	1.25E-03	0.00E-01	6.95E-04	1.59E-03	0.00E-01	0.00E-01	0.00E-01
TC 99M	4.39E-27	2.22E-25	1.21E-28	3.39E-28	5.05E-27	0.00E-01	1.88E-28	0.00E-01
TC101	4.41E-30	7.67E-38	3.16E-31	4.49E-31	8.12E-30	0.00E-01	2.73E-31	0.00E-01

DOSE TRANSFER FACTORS FOR RADIONUCLIDES IN EFFLUENT WATER

AGE = TEENAGER
PATHWAY = IRRIGATED STORED FRUIT, VEGETABLES, GRAIN

	TOTAL BODY	GI-LLI	BONE	LIVER	KIDNEY	THYROID	LUNG	SKIN
				(mrem gal)/(Ci min)				
RU103	7.30E+01	1.43E+04	1.71E+02	0.00E-01	6.02E+02	0.00E-01	0.00E-01	0.00E-01
RU105	2.20E-27	4.57E-24	5.66E-27	0.00E-01	7.14E-26	0.00E-01	0.00E-01	0.00E-01
RU106	1.09E+03	4.15E+05	8.66E+03	0.00E-01	1.67E+04	0.00E-01	0.00E-01	0.00E-01
AG110M	2.47E+02	1.14E+05	4.29E+02	4.06E+02	7.74E+02	0.00E-01	0.00E-01	0.00E-01
TE125M	5.53E+02	1.22E+04	4.13E+03	1.49E+03	0.00E-01	1.15E+03	0.00E-01	0.00E-01
TE127M	1.96E+03	4.11E+04	1.65E+04	5.85E+03	6.68E+04	3.92E+03	0.00E-01	0.00E-01
TE127	2.01E-26	7.22E-24	9.35E-26	3.31E-26	3.79E-25	6.45E-26	0.00E-01	0.00E-01
TE129M	1.43E+03	3.40E+04	9.05E+03	3.36E+03	3.79E+04	2.92E+03	0.00E-01	0.00E-01
TE129	4.86E-28	1.09E-26	2.00E-27	7.44E-28	8.38E-27	1.43E-27	0.00E-01	0.00E-01
TE131M	7.40E-13	7.12E-11	1.85E-12	8.87E-13	9.25E-12	1.33E-12	0.00E-01	0.00E-01
TE131	4.85E-29	1.27E-29	1.55E-28	6.39E-29	6.78E-28	1.20E-28	0.00E-01	0.00E-01
TE132	3.04E-03	1.02E-01	5.10E-03	3.23E-03	3.10E-02	3.41E-03	0.00E-01	0.00E-01
I 130	9.29E-25	1.79E-24	8.04E-25	2.33E-24	3.58E-24	1.90E-22	0.00E-01	0.00E-01
I 131	2.41E+01	8.87E+00	3.20E+01	4.49E+01	7.72E+01	1.31E+04	0.00E-01	0.00E-01
I 132	3.07E-26	3.73E-26	3.27E-26	8.56E-26	1.35E-25	2.88E-24	0.00E-01	0.00E-01
I 133	2.34E-19	5.79E-19	4.51E-19	7.66E-19	1.34E-18	1.07E-16	0.00E-01	0.00E-01
I 134	3.81E-27	1.40E-28	4.00E-27	1.06E-26	1.67E-26	1.77E-25	0.00E-01	0.00E-01
I 135	2.35E-25	7.03E-25	2.46E-25	6.34E-25	1.00E-24	4.08E-23	0.00E-01	0.00E-01
CS134	2.16E+05	5.79E+03	1.98E+05	4.65E+05	1.48E+05	0.00E-01	5.65E+04	0.00E-01
CS136	1.22E+03	1.46E+02	4.61E+02	1.81E+03	9.88E+02	0.00E-01	1.56E+02	0.00E-01
CS137	1.33E+05	5.43E+03	2.87E+05	3.82E+05	1.30E+05	0.00E-01	5.05E+04	0.00E-01
CS138	7.65E-28	6.94E-31	7.96E-28	1.53E-27	1.13E-27	0.00E-01	1.31E-28	0.00E-01
BA139	2.32E-28	7.11E-26	7.98E-27	5.61E-30	5.29E-30	0.00E-01	3.87E-30	0.00E-01
BA140	8.97E+01	2.15E+03	1.39E+03	1.71E+00	5.79E-01	0.00E-01	1.15E+00	0.00E-01
BA141	4.86E-30	3.10E-34	1.45E-28	1.09E-31	1.01E-31	0.00E-01	7.44E-32	0.00E-01
BA142	4.66E-31	2.32E-41	7.57E-30	7.57E-33	6.40E-33	0.00E-01	5.04E-33	0.00E-01
LA140	2.21E-12	4.76E-07	1.69E-11	8.29E-12	0.00E-01	0.00E-01	0.00E-01	0.00E-01
LA142	1.34E-30	1.64E-25	1.21E-29	5.39E-30	0.00E-01	0.00E-01	0.00E-01	0.00E-01
CE141	5.19E-01	1.29E+04	6.77E+00	4.52E+00	2.13E+00	0.00E-01	0.00E-01	0.00E-01
CE143	3.71E-15	9.99E-10	4.57E-14	3.32E-11	1.49E-14	0.00E-01	0.00E-01	0.00E-01
CE144	7.83E+01	3.67E+05	1.46E+03	6.03E+02	3.60E+02	0.00E-01	0.00E-01	0.00E-01
PR143	4.00E-02	2.64E+03	8.03E-01	3.20E-01	1.86E-01	0.00E-01	0.00E-01	0.00E-01
PR144	3.91E-33	8.50E-35	7.71E-32	3.16E-32	1.81E-32	0.00E-01	0.00E-01	0.00E-01
ND147	1.69E-02	1.02E+03	2.59E-01	2.82E-01	1.65E-01	0.00E-01	0.00E-01	0.00E-01
W 187	5.39E-18	4.16E-15	1.89E-17	1.54E-17	0.00E-01	0.00E-01	0.00E-01	0.00E-01
NP239	7.74E-10	2.24E-04	1.48E-08	1.39E-09	4.37E-09	0.00E-01	0.00E-01	0.00E-01

DOSE TRANSFER FACTORS FOR RADIONUCLIDES IN EFFLUENT WATER

AGE = TEENAGER
PATHWAY = IRRIGATED FRESH FORAGE--MILK

	TOTAL BODY	GI-LLI	BONE	LIVER	KIDNEY	THYROID	LUNG	SKIN
				(mrem gal)/(Ci min)				
H 3	5.51E+00	5.51E+00	0.00E-01	5.51E+00	5.51E+00	5.51E+00	5.51E+00	0.00E-01
C 14	1.19E+04	1.19E+04	5.95E+04	1.19E+04	1.19E+04	1.19E+04	1.19E+04	0.00E-01
NA 24	9.95E+01	9.95E+01	9.95E+01	9.95E+01	9.95E+01	9.95E+01	9.95E+01	0.00E-01
P 32	2.82E+04	6.11E+04	7.27E+05	4.50E+04	0.00E-01	0.00E-01	0.00E-01	0.00E-01
CR 51	1.08E+00	1.81E+02	0.00E-01	0.00E-01	2.36E-01	5.98E-01	1.54E+00	0.00E-01
MN 54	5.31E+01	5.50E+02	0.00E-01	2.68E+02	7.99E+01	0.00E-01	0.00E-01	0.00E-01
MN 56	2.31E-08	8.55E-06	0.00E-01	1.30E-07	1.64E-07	0.00E-01	0.00E-01	0.00E-01
FE 55	1.39E+02	2.57E+02	8.39E+02	5.95E+02	0.00E-01	0.00E-01	3.77E+02	0.00E-01
FE 59	9.69E+02	5.93E+03	1.07E+03	2.51E+03	0.00E-01	0.00E-01	7.91E+02	0.00E-01
CO 58	3.68E+02	2.20E+03	0.00E-01	1.60E+02	0.00E-01	0.00E-01	0.00E-01	0.00E-01
CO 60	1.18E+03	6.83E+03	0.00E-01	5.24E+02	0.00E-01	0.00E-01	0.00E-01	0.00E-01
NI 63	7.64E+03	2.53E+03	2.25E+05	1.59E+04	0.00E-01	0.00E-01	0.00E-01	0.00E-01
NI 65	7.36E-07	8.76E-05	1.26E-05	1.62E-06	0.00E-01	0.00E-01	0.00E-01	0.00E-01
CU 64	4.55E-01	7.50E+01	0.00E-01	9.67E-01	2.45E+00	0.00E-01	0.00E-01	0.00E-01
ZN 65	6.71E+04	6.10E+04	4.15E+04	1.44E+05	9.21E+04	0.00E-01	0.00E-01	0.00E-01
ZN 69	1.46E-17	3.84E-16	1.09E-16	2.09E-16	1.36E-16	0.00E-01	0.00E-01	0.00E-01
BR 83	3.34E-06	0.00E-01	0.00E-01	0.00E-01	0.00E-01	0.00E-01	0.00E-01	0.00E-01
BR 84	3.26E-27	0.00E-01	0.00E-01	0.00E-01	0.00E-01	0.00E-01	0.00E-01	0.00E-01
BR 85	2.30E-35	0.00E-01	0.00E-01	0.00E-01	0.00E-01	0.00E-01	0.00E-01	0.00E-01
RB 86	4.98E+04	1.57E+04	0.00E-01	1.06E+05	0.00E-01	0.00E-01	0.00E-01	0.00E-01
RB 88	2.48E-28	3.99E-35	0.00E-01	4.66E-28	0.00E-01	0.00E-01	0.00E-01	0.00E-01
RB 89	1.22E-28	2.65E-37	0.00E-01	1.73E-28	0.00E-01	0.00E-01	0.00E-01	0.00E-01
SR 89	1.60E+03	6.65E+03	5.58E+04	0.00E-01	0.00E-01	0.00E-01	0.00E-01	0.00E-01
SR 90	5.62E+04	6.42E+04	2.81E+06	0.00E-01	0.00E-01	0.00E-01	0.00E-01	0.00E-01
SR 91	4.75E-02	5.42E+00	1.20E+00	0.00E-01	0.00E-01	0.00E-01	0.00E-01	0.00E-01
SR 92	7.33E-07	4.38E-04	1.72E-05	0.00E-01	0.00E-01	0.00E-01	0.00E-01	0.00E-01
Y 90	8.41E-05	2.58E+01	3.12E-03	0.00E-01	0.00E-01	0.00E-01	0.00E-01	0.00E-01
Y 91M	4.12E-26	5.09E-23	1.08E-24	0.00E-01	0.00E-01	0.00E-01	0.00E-01	0.00E-01
Y 91	8.62E-03	1.32E+02	3.22E-01	0.00E-01	0.00E-01	0.00E-01	0.00E-01	0.00E-01
Y 92	6.22E-11	5.90E-05	2.15E-09	0.00E-01	0.00E-01	0.00E-01	0.00E-01	0.00E-01
Y 93	2.54E-07	2.83E-01	9.26E-06	0.00E-01	0.00E-01	0.00E-01	0.00E-01	0.00E-01
ZR 95	7.24E-03	2.43E+01	3.34E-02	1.05E-02	1.55E-02	0.00E-01	0.00E-01	0.00E-01
ZR 97	1.67E-06	9.82E-01	1.83E-05	3.63E-06	5.50E-06	0.00E-01	0.00E-01	0.00E-01
NB 95	9.10E-01	7.07E+03	2.98E+00	1.65E+00	1.60E+00	0.00E-01	0.00E-01	0.00E-01
MO 99	2.04E+02	1.92E+03	0.00E-01	1.07E+03	2.45E+03	0.00E-01	0.00E-01	0.00E-01
TC 99M	4.51E-03	2.28E-01	1.25E-04	3.48E-04	5.18E-03	0.00E-01	1.93E-04	0.00E-01
TC101	9.99E-30	1.74E-37	7.15E-31	1.02E-30	1.84E-29	0.00E-01	6.19E-31	0.00E-01

DOSE TRANSFER FACTORS FOR RADIONUCLIDES IN EFFLUENT WATER

AGE = TEENAGER
PATHWAY = IRRIGATED FRESH FORAGE--MILK

	TOTAL BODY	GI-LLI	BONE	LIVER	KIDNEY	THYROID	LUNG	SKIN
				(mrem gal)/(Ci min)				
RU103	1.62E-02	3.17E+00	3.80E-02	0.00E-01	1.34E-01	0.00E-01	0.00E-01	0.00E-01
RU105	1.26E-08	2.62E-05	3.25E-08	0.00E-01	4.09E-07	0.00E-01	0.00E-01	0.00E-01
RU106	9.04E-02	3.44E+01	7.17E-01	0.00E-01	1.38E+00	0.00E-01	0.00E-01	0.00E-01
AG110M	1.07E+03	4.95E+05	1.86E+03	1.76E+03	3.36E+03	0.00E-01	0.00E-01	0.00E-01
TE125M	8.37E+01	1.85E+03	6.26E+02	2.25E+02	0.00E-01	1.75E+02	0.00E-01	0.00E-01
TE127M	2.05E+02	4.30E+03	1.73E+03	6.12E+02	7.00E+03	4.11E+02	0.00E-01	0.00E-01
TE127	5.89E-03	2.11E+00	2.74E-02	9.70E-03	1.11E-01	1.89E-02	0.00E-01	0.00E-01
TE129M	3.75E+02	8.90E+03	2.37E+03	8.80E+02	9.92E+03	7.65E+02	0.00E-01	0.00E-01
TE129	1.74E-15	3.91E-14	7.16E-15	2.67E-15	3.00E-14	5.11E-15	0.00E-01	0.00E-01
TE131M	6.24E+00	6.01E+02	1.56E+01	7.49E+00	7.81E+01	1.13E+01	0.00E-01	0.00E-01
TE131	4.37E-30	1.15E-30	1.40E-29	5.76E-30	6.11E-29	1.08E-29	0.00E-01	0.00E-01
TE132	6.17E+01	2.08E+03	1.03E+02	6.56E+01	6.29E+02	6.91E+01	0.00E-01	0.00E-01
I 130	3.90E+00	7.50E+00	3.37E+00	9.76E+00	1.50E+01	7.95E+02	0.00E-01	0.00E-01
I 131	1.92E+03	7.05E+02	2.55E+03	3.57E+03	6.14E+03	1.04E+06	0.00E-01	0.00E-01
I 132	9.99E-07	1.21E-06	1.06E-06	2.78E-06	4.38E-06	9.38E-05	0.00E-01	0.00E-01
I 133	1.72E+01	4.26E+01	3.32E+01	5.63E+01	9.88E+01	7.86E+03	0.00E-01	0.00E-01
I 134	7.32E-18	2.68E-19	7.69E-18	2.04E-17	3.21E-17	3.39E-16	0.00E-01	0.00E-01
I 135	9.40E-02	2.81E-01	9.85E-02	2.54E-01	4.00E-01	1.63E+01	0.00E-01	0.00E-01
CS134	2.03E+05	5.43E+03	1.86E+05	4.37E+05	1.39E+05	0.00E-01	5.30E+04	0.00E-01
CS136	2.72E+04	3.26E+03	1.03E+04	4.05E+04	2.21E+04	0.00E-01	3.48E+03	0.00E-01
CS137	1.17E+05	4.79E+03	2.53E+05	3.36E+05	1.14E+05	0.00E-01	4.45E+04	0.00E-01
CS138	8.32E-28	7.55E-31	8.67E-28	1.66E-27	1.23E-27	0.00E-01	1.43E-28	0.00E-01
BA139	3.00E-14	9.18E-12	1.03E-12	7.24E-16	6.83E-16	0.00E-01	4.99E-16	0.00E-01
BA140	7.22E+01	1.73E+03	1.12E+03	1.37E+00	4.65E-01	0.00E-01	9.23E-01	0.00E-01
BA141	1.76E-31	1.12E-35	5.28E-30	3.94E-33	3.66E-33	0.00E-01	2.70E-33	0.00E-01
BA142	1.69E-32	8.44E-43	2.75E-31	2.75E-34	2.32E-34	0.00E-01	1.83E-34	0.00E-01
LA140	2.53E-05	5.46E+00	1.93E-04	9.51E-05	0.00E-01	0.00E-01	0.00E-01	0.00E-01
LA142	2.89E-17	3.54E-12	2.62E-16	1.16E-16	0.00E-01	0.00E-01	0.00E-01	0.00E-01
CE141	1.45E-02	3.61E+02	1.89E-01	1.26E-01	5.94E-02	0.00E-01	0.00E-01	0.00E-01
CE143	1.48E-04	4.00E+01	1.83E-03	1.33E+00	5.96E-04	0.00E-01	0.00E-01	0.00E-01
CE144	6.76E-01	3.16E+03	1.26E+01	5.20E+00	3.11E+00	0.00E-01	0.00E-01	0.00E-01
PR143	3.32E-04	2.20E+01	6.67E-03	2.67E-03	1.55E-03	0.00E-01	0.00E-01	0.00E-01
PR144	1.77E-36	3.86E-38	3.50E-35	1.43E-35	8.22E-36	0.00E-01	0.00E-01	0.00E-01
ND147	2.77E-04	1.67E+01	4.25E-03	4.62E-03	2.71E-03	0.00E-01	0.00E-01	0.00E-01
W 187	8.08E-02	6.24E+01	2.83E-01	2.31E-01	0.00E-01	0.00E-01	0.00E-01	0.00E-01
NP239	8.81E-06	2.55E+00	1.68E-04	1.59E-05	4.98E-05	0.00E-01	0.00E-01	0.00E-01

DOSE TRANSFER FACTORS FOR RADIONUCLIDES IN EFFLUENT WATER

AGE = TEENAGER
PATHWAY = IRRIGATED FRESH FORAGE--MEAT

	TOTAL BODY	GI-LLI	BONE	LIVER	KIDNEY	THYROID	LUNG	SKIN
				(mrem gal)/(Ci min)				
H 3	9.85E-01	9.85E-01	0.00E-01	9.85E-01	9.85E-01	9.85E-01	9.85E-01	0.00E-01
C 14	5.00E+03	5.00E+03	2.50E+04	5.00E+03	5.00E+03	5.00E+03	5.00E+03	0.00E-01
NA 24	2.74E-08	2.74E-08	2.74E-08	2.74E-08	2.74E-08	2.74E-08	2.74E-08	0.00E-01
P 32	3.52E+03	7.63E+03	9.08E+04	5.63E+03	0.00E-01	0.00E-01	0.00E-01	0.00E-01
CR 51	1.22E-01	2.04E+01	0.00E-01	0.00E-01	2.67E-02	6.76E-02	1.74E-01	0.00E-01
MN 54	2.65E+01	2.75E+02	0.00E-01	1.34E+02	3.99E+01	0.00E-01	0.00E-01	0.00E-01
MN 56	4.47E-29	1.65E-26	0.00E-01	2.51E-28	3.18E-28	0.00E-01	0.00E-01	0.00E-01
FE 55	7.42E+02	1.38E+03	4.49E+03	3.18E+03	0.00E-01	0.00E-01	2.02E+03	0.00E-01
FE 59	3.97E+03	2.43E+04	4.40E+03	1.03E+04	0.00E-01	0.00E-01	3.24E+03	0.00E-01
CO 58	6.52E+02	3.90E+03	0.00E-01	2.83E+02	0.00E-01	0.00E-01	0.00E-01	0.00E-01
CO 60	2.48E+03	1.43E+04	0.00E-01	1.10E+03	0.00E-01	0.00E-01	0.00E-01	0.00E-01
NI 63	9.82E+03	3.26E+03	2.90E+05	2.04E+04	0.00E-01	0.00E-01	0.00E-01	0.00E-01
NI 65	4.49E-27	5.34E-25	7.71E-26	9.85E-27	0.00E-01	0.00E-01	0.00E-01	0.00E-01
CU 64	2.29E-12	3.77E-10	0.00E-01	4.86E-12	1.23E-11	0.00E-01	0.00E-01	0.00E-01
ZN 65	7.97E+03	7.24E+03	4.92E+03	1.71E+04	1.09E+04	0.00E-01	0.00E-01	0.00E-01
ZN 69	2.74E-29	7.21E-28	2.05E-28	3.91E-28	2.56E-28	0.00E-01	0.00E-01	0.00E-01
BR 83	2.72E-27	0.00E-01	0.00E-01	0.00E-01	0.00E-01	0.00E-01	0.00E-01	0.00E-01
BR 84	2.76E-28	0.00E-01	0.00E-01	0.00E-01	0.00E-01	0.00E-01	0.00E-01	0.00E-01
BR 85	1.94E-36	0.00E-01	0.00E-01	0.00E-01	0.00E-01	0.00E-01	0.00E-01	0.00E-01
RB 86	4.29E+03	1.35E+03	0.00E-01	9.13E+03	0.00E-01	0.00E-01	0.00E-01	0.00E-01
RB 88	4.17E-29	6.70E-36	0.00E-01	7.82E-29	0.00E-01	0.00E-01	0.00E-01	0.00E-01
RB 89	2.05E-29	4.45E-38	0.00E-01	2.90E-29	0.00E-01	0.00E-01	0.00E-01	0.00E-01
SR 89	1.52E+02	6.33E+02	5.31E+03	0.00E-01	0.00E-01	0.00E-01	0.00E-01	0.00E-01
SR 90	6.84E+03	7.81E+03	3.42E+05	0.00E-01	0.00E-01	0.00E-01	0.00E-01	0.00E-01
SR 91	1.13E-16	1.28E-14	2.83E-15	0.00E-01	0.00E-01	0.00E-01	0.00E-01	0.00E-01
SR 92	1.67E-28	9.95E-26	3.91E-27	0.00E-01	0.00E-01	0.00E-01	0.00E-01	0.00E-01
Y 90	5.92E-05	1.81E+01	2.20E-03	0.00E-01	0.00E-01	0.00E-01	0.00E-01	0.00E-01
Y 91M	8.26E-33	1.02E-29	2.16E-31	0.00E-01	0.00E-01	0.00E-01	0.00E-01	0.00E-01
Y 91	5.21E-01	7.96E+03	1.94E+01	0.00E-01	0.00E-01	0.00E-01	0.00E-01	0.00E-01
Y 92	4.76E-31	4.51E-25	1.64E-29	0.00E-01	0.00E-01	0.00E-01	0.00E-01	0.00E-01
Y 93	2.39E-18	2.66E-12	8.71E-17	0.00E-01	0.00E-01	0.00E-01	0.00E-01	0.00E-01
ZR 95	6.59E+00	2.21E+04	3.04E+01	9.58E+00	1.41E+01	0.00E-01	0.00E-01	0.00E-01
ZR 97	3.68E-11	2.17E-05	4.04E-10	8.00E-11	1.21E-10	0.00E-01	0.00E-01	0.00E-01
NB 95	1.16E+01	9.03E+04	3.81E+01	2.11E+01	2.05E+01	0.00E-01	0.00E-01	0.00E-01
MO 99	3.77E-01	3.54E+00	0.00E-01	1.98E+00	4.53E+00	0.00E-01	0.00E-01	0.00E-01
TC 99M	2.86E-24	1.45E-22	7.90E-26	2.20E-25	3.28E-24	0.00E-01	1.22E-25	0.00E-01
TC101	2.60E-29	4.52E-37	1.86E-30	2.64E-30	4.78E-29	0.00E-01	1.61E-30	0.00E-01

DOSE TRANSFER FACTORS FOR RADIONUCLIDES IN EFFLUENT WATER

AGE = TEENAGER
PATHWAY = IRRIGATED FRESH FORAGE--MEAT

	TOTAL BODY	GI-LLI	BONE	LIVER	KIDNEY	THYROID	LUNG	SKIN
				(mrem gal)/(Ci min)				
RU103	7.68E+02	1.50E+05	1.80E+03	0.00E-01	6.33E+03	0.00E-01	0.00E-01	0.00E-01
RU105	1.30E-26	2.70E-23	3.34E-26	0.00E-01	4.21E-25	0.00E-01	0.00E-01	0.00E-01
RU106	5.68E+03	2.16E+06	4.51E+04	0.00E-01	8.69E+04	0.00E-01	0.00E-01	0.00E-01
AG110M	5.64E+01	2.60E+04	9.79E+01	9.27E+01	1.77E+02	0.00E-01	0.00E-01	0.00E-01
TE125M	8.45E+02	1.86E+04	6.32E+03	2.28E+03	0.00E-01	1.76E+03	0.00E-01	0.00E-01
TE127M	2.29E+03	4.80E+04	1.93E+04	6.83E+03	7.81E+04	4.58E+03	0.00E-01	0.00E-01
TE127	8.99E-16	3.23E-13	4.18E-15	1.48E-15	1.69E-14	2.88E-15	0.00E-01	0.00E-01
TE129M	3.24E+03	7.68E+04	2.05E+04	7.59E+03	8.56E+04	6.60E+03	0.00E-01	0.00E-01
TE129	5.47E-28	1.23E-26	2.25E-27	8.39E-28	9.44E-27	1.61E-27	0.00E-01	0.00E-01
TE131M	3.60E-03	3.47E-01	9.01E-03	4.32E-03	4.50E-02	6.50E-03	0.00E-01	0.00E-01
TE131	5.47E-29	1.44E-29	1.75E-28	7.21E-29	7.65E-28	1.35E-28	0.00E-01	0.00E-01
TE132	1.68E+01	5.66E+02	2.82E+01	1.79E+01	1.72E+02	1.89E+01	0.00E-01	0.00E-01
I 130	8.90E-12	1.71E-11	7.70E-12	2.23E-11	3.43E-11	1.82E-09	0.00E-01	0.00E-01
I 131	3.19E+01	1.17E+01	4.24E+01	5.93E+01	1.02E+02	1.73E+04	0.00E-01	0.00E-01
I 132	1.31E-27	1.59E-27	1.40E-27	3.66E-27	5.76E-27	1.23E-25	0.00E-01	0.00E-01
I 133	7.63E-07	1.89E-06	1.47E-06	2.50E-06	4.39E-06	3.49E-04	0.00E-01	0.00E-01
I 134	1.63E-28	5.98E-30	1.71E-28	4.54E-28	7.15E-28	7.56E-27	0.00E-01	0.00E-01
I 135	1.40E-22	4.18E-22	1.47E-22	3.78E-22	5.96E-22	2.43E-20	0.00E-01	0.00E-01
CS134	1.08E+04	2.89E+02	9.89E+03	2.33E+04	7.39E+03	0.00E-01	2.82E+03	0.00E-01
CS136	5.69E+02	6.82E+01	2.15E+02	8.47E+02	4.61E+02	0.00E-01	7.27E+01	0.00E-01
CS137	6.34E+03	2.59E+02	1.37E+04	1.82E+04	6.19E+03	0.00E-01	2.41E+03	0.00E-01
CS138	4.51E-29	4.09E-32	4.69E-29	9.01E-29	6.65E-29	0.00E-01	7.74E-30	0.00E-01
BA139	1.10E-29	3.36E-27	3.76E-28	2.65E-31	2.49E-31	0.00E-01	1.82E-31	0.00E-01
BA140	3.54E+01	8.47E+02	5.49E+02	6.73E-01	2.28E-01	0.00E-01	4.52E-01	0.00E-01
BA141	2.29E-31	1.46E-35	6.86E-30	5.12E-33	4.76E-33	0.00E-01	3.51E-33	0.00E-01
BA142	2.20E-32	1.10E-42	3.57E-31	3.57E-34	3.02E-34	0.00E-01	2.38E-34	0.00E-01
LA140	9.71E-08	2.10E-02	7.43E-07	3.65E-07	0.00E-01	0.00E-01	0.00E-01	0.00E-01
LA142	3.96E-33	4.84E-28	3.58E-32	1.59E-32	0.00E-01	0.00E-01	0.00E-01	0.00E-01
CE141	1.93E-02	4.80E+02	2.51E-01	1.68E-01	7.89E-02	0.00E-01	0.00E-01	0.00E-01
CE143	3.45E-08	9.28E-03	4.24E-07	3.09E-04	1.38E-07	0.00E-01	0.00E-01	0.00E-01
CE144	1.26E+00	5.90E+03	2.35E+01	9.72E+00	5.80E+00	0.00E-01	0.00E-01	0.00E-01
PR143	2.03E-02	1.34E+03	4.07E-01	1.63E-01	9.45E-02	0.00E-01	0.00E-01	0.00E-01
PR144	2.71E-34	5.89E-36	5.34E-33	2.19E-33	1.26E-33	0.00E-01	0.00E-01	0.00E-01
ND147	9.65E-03	5.81E+02	1.48E-01	1.61E-01	9.46E-02	0.00E-01	0.00E-01	0.00E-01
W 187	1.25E-07	9.64E-05	4.37E-07	3.56E-07	0.00E-01	0.00E-01	0.00E-01	0.00E-01
NP239	2.89E-07	8.38E-02	5.52E-06	5.21E-07	1.63E-06	0.00E-01	0.00E-01	0.00E-01

DOSE TRANSFER FACTORS FOR RADIONUCLIDES IN EFFLUENT WATER

AGE = TEENAGER
PATHWAY = IRRIGATED STORED FEED--MILK

	TOTAL BODY	GI-LLI	BONE	LIVER	KIDNEY	THYROID	LUNG	SKIN
				(mrem gal)/(Ci min)				
H 3	5.51E+00	5.51E+00	0.00E-01	5.51E+00	5.51E+00	5.51E+00	5.51E+00	0.00E-01
C 14	1.23E+04	1.23E+04	6.16E+04	1.23E+04	1.23E+04	1.23E+04	1.23E+04	0.00E-01
NA 24	9.95E+01	9.95E+01	9.95E+01	9.95E+01	9.95E+01	9.95E+01	9.95E+01	0.00E-01
P 32	2.96E+04	6.43E+04	7.65E+05	4.74E+04	0.00E-01	0.00E-01	0.00E-01	0.00E-01
CR 51	1.19E+00	2.00E+02	0.00E-01	0.00E-01	2.61E-01	6.62E-01	1.70E+00	0.00E-01
MN 54	6.44E+01	6.66E+02	0.00E-01	3.25E+02	9.68E+01	0.00E-01	0.00E-01	0.00E-01
MN 56	2.31E-08	8.55E-06	0.00E-01	1.30E-07	1.64E-07	0.00E-01	0.00E-01	0.00E-01
FE 55	1.69E+02	3.15E+02	1.02E+03	7.27E+02	0.00E-01	0.00E-01	4.61E+02	0.00E-01
FE 59	1.11E+03	6.78E+03	1.23E+03	2.87E+03	0.00E-01	0.00E-01	9.04E+02	0.00E-01
CO 58	4.30E+02	2.57E+03	0.00E-01	1.87E+02	0.00E-01	0.00E-01	0.00E-01	0.00E-01
CO 60	1.44E+03	8.35E+03	0.00E-01	6.41E+02	0.00E-01	0.00E-01	0.00E-01	0.00E-01
NI 63	9.34E+03	3.10E+03	2.75E+05	1.94E+04	0.00E-01	0.00E-01	0.00E-01	0.00E-01
NI 65	7.36E-07	8.76E-05	1.26E-05	1.62E-06	0.00E-01	0.00E-01	0.00E-01	0.00E-01
CU 64	4.55E-01	7.50E+01	0.00E-01	9.67E-01	2.45E+00	0.00E-01	0.00E-01	0.00E-01
ZN 65	8.07E+04	7.33E+04	4.98E+04	1.73E+05	1.11E+05	0.00E-01	0.00E-01	0.00E-01
ZN 69	1.46E-17	3.84E-16	1.09E-16	2.09E-16	1.36E-16	0.00E-01	0.00E-01	0.00E-01
BR 83	3.34E-06	0.00E-01	0.00E-01	0.00E-01	0.00E-01	0.00E-01	0.00E-01	0.00E-01
BR 84	3.26E-27	0.00E-01	0.00E-01	0.00E-01	0.00E-01	0.00E-01	0.00E-01	0.00E-01
BR 85	2.30E-35	0.00E-01	0.00E-01	0.00E-01	0.00E-01	0.00E-01	0.00E-01	0.00E-01
RB 86	5.35E+04	1.68E+04	0.00E-01	1.14E+05	0.00E-01	0.00E-01	0.00E-01	0.00E-01
RB 88	2.48E-28	3.99E-35	0.00E-01	4.66E-28	0.00E-01	0.00E-01	0.00E-01	0.00E-01
RB 89	1.22E-28	2.65E-37	0.00E-01	1.73E-28	0.00E-01	0.00E-01	0.00E-01	0.00E-01
SR 89	1.83E+03	7.63E+03	6.41E+04	0.00E-01	0.00E-01	0.00E-01	0.00E-01	0.00E-01
SR 90	6.31E+04	7.20E+04	3.15E+06	0.00E-01	0.00E-01	0.00E-01	0.00E-01	0.00E-01
SR 91	4.75E-02	5.42E+00	1.20E+00	0.00E-01	0.00E-01	0.00E-01	0.00E-01	0.00E-01
SR 92	7.33E-07	4.38E-04	1.72E-05	0.00E-01	0.00E-01	0.00E-01	0.00E-01	0.00E-01
Y 90	8.41E-05	2.58E+01	3.12E-03	0.00E-01	0.00E-01	0.00E-01	0.00E-01	0.00E-01
Y 91M	4.12E-26	5.09E-23	1.08E-24	0.00E-01	0.00E-01	0.00E-01	0.00E-01	0.00E-01
Y 91	9.99E-03	1.53E+02	3.73E-01	0.00E-01	0.00E-01	0.00E-01	0.00E-01	0.00E-01
Y 92	6.22E-11	5.90E-05	2.15E-09	0.00E-01	0.00E-01	0.00E-01	0.00E-01	0.00E-01
Y 93	2.54E-07	2.83E-01	9.26E-06	0.00E-01	0.00E-01	0.00E-01	0.00E-01	0.00E-01
ZR 95	8.43E-03	2.83E+01	3.88E-02	1.23E-02	1.80E-02	0.00E-01	0.00E-01	0.00E-01
ZR 97	1.67E-06	9.82E-01	1.83E-05	3.63E-06	5.50E-06	0.00E-01	0.00E-01	0.00E-01
NB 95	1.02E+00	7.96E+03	3.36E+00	1.86E+00	1.80E+00	0.00E-01	0.00E-01	0.00E-01
MO 99	2.04E+02	1.92E+03	0.00E-01	1.07E+03	2.45E+03	0.00E-01	0.00E-01	0.00E-01
TC 99M	4.51E-03	2.28E-01	1.25E-04	3.48E-04	5.18E-03	0.00E-01	1.93E-04	0.00E-01
TC101	9.99E-30	1.74E-37	7.15E-31	1.02E-30	1.84E-29	0.00E-01	6.19E-31	0.00E-01

DOSE TRANSFER FACTORS FOR RADIONUCLIDES IN EFFLUENT WATER

AGE = TEENAGER
PATHWAY = IRRIGATED STORED FEED--MILK

	TOTAL BODY	GI-LLI	BONE	LIVER	KIDNEY	THYROID	LUNG	SKIN
				(mrem gal)/(Ci min)				
RU103	1.84E-02	3.59E+00	4.30E-02	0.00E-01	1.52E-01	0.00E-01	0.00E-01	0.00E-01
RU105	1.26E-08	2.62E-05	3.25E-08	0.00E-01	4.09E-07	0.00E-01	0.00E-01	0.00E-01
RU106	1.10E-01	4.17E+01	8.70E-01	0.00E-01	1.68E+00	0.00E-01	0.00E-01	0.00E-01
AG110M	1.29E+03	5.97E+05	2.25E+03	2.13E+03	4.06E+03	0.00E-01	0.00E-01	0.00E-01
TE125M	9.66E+01	2.13E+03	7.23E+02	2.60E+02	0.00E-01	2.02E+02	0.00E-01	0.00E-01
TE127M	2.42E+02	5.08E+03	2.04E+03	7.23E+02	8.26E+03	4.84E+02	0.00E-01	0.00E-01
TE127	5.89E-03	2.11E+00	2.74E-02	9.70E-03	1.11E-01	1.89E-02	0.00E-01	0.00E-01
TE129M	4.20E+02	9.97E+03	2.66E+03	9.86E+02	1.11E+04	8.57E+02	0.00E-01	0.00E-01
TE129	1.74E-15	3.91E-14	7.16E-15	2.67E-15	3.00E-14	5.11E-15	0.00E-01	0.00E-01
TE131M	6.24E+00	6.01E+02	1.56E+01	7.49E+00	7.81E+01	1.13E+01	0.00E-01	0.00E-01
TE131	4.37E-30	1.15E-30	1.40E-29	5.76E-30	6.11E-29	1.08E-29	0.00E-01	0.00E-01
TE132	6.17E+01	2.08E+03	1.04E+02	6.56E+01	6.29E+02	6.92E+01	0.00E-01	0.00E-01
I 130	3.90E+00	7.50E+00	3.37E+00	9.76E+00	1.50E+01	7.95E+02	0.00E-01	0.00E-01
I 131	1.95E+03	7.17E+02	2.59E+03	3.63E+03	6.24E+03	1.06E+06	0.00E-01	0.00E-01
I 132	9.99E-07	1.21E-06	1.06E-06	2.78E-06	4.38E-06	9.38E-05	0.00E-01	0.00E-01
I 133	1.72E+01	4.26E+01	3.32E+01	5.63E+01	9.88E+01	7.86E+03	0.00E-01	0.00E-01
I 134	7.32E-18	2.68E-19	7.69E-18	2.04E-17	3.21E-17	3.39E-16	0.00E-01	0.00E-01
I 135	9.40E-02	2.81E-01	9.85E-02	2.54E-01	4.00E-01	1.63E+01	0.00E-01	0.00E-01
CS134	2.47E+05	6.63E+03	2.26E+05	5.33E+05	1.69E+05	0.00E-01	6.46E+04	0.00E-01
CS136	2.85E+04	3.41E+03	1.08E+04	4.24E+04	2.31E+04	0.00E-01	3.64E+03	0.00E-01
CS137	1.43E+05	5.86E+03	3.09E+05	4.12E+05	1.40E+05	0.00E-01	5.44E+04	0.00E-01
CS138	8.32E-28	7.55E-31	8.67E-28	1.66E-27	1.23E-27	0.00E-01	1.43E-28	0.00E-01
BA139	3.00E-14	9.18E-12	1.03E-12	7.24E-16	6.83E-16	0.00E-01	4.99E-16	0.00E-01
BA140	7.54E+01	1.80E+03	1.17E+03	1.43E+00	4.86E-01	0.00E-01	9.64E-01	0.00E-01
BA141	1.76E-31	1.12E-35	5.28E-30	3.94E-33	3.66E-33	0.00E-01	2.70E-33	0.00E-01
BA142	1.69E-32	8.44E-43	2.75E-31	2.75E-34	2.32E-34	0.00E-01	1.83E-34	0.00E-01
LA140	2.53E-05	5.46E+00	1.93E-04	9.51E-05	0.00E-01	0.00E-01	0.00E-01	0.00E-01
LA142	2.89E-17	3.54E-12	2.62E-16	1.16E-16	0.00E-01	0.00E-01	0.00E-01	0.00E-01
CE141	1.62E-02	4.04E+02	2.12E-01	1.41E-01	6.65E-02	0.00E-01	0.00E-01	0.00E-01
CE143	1.48E-04	4.00E+01	1.83E-03	1.33E+00	5.96E-04	0.00E-01	0.00E-01	0.00E-01
CE144	8.18E-01	3.83E+03	1.52E+01	6.30E+00	3.76E+00	0.00E-01	0.00E-01	0.00E-01
PR143	3.49E-04	2.30E+01	7.00E-03	2.80E-03	1.63E-03	0.00E-01	0.00E-01	0.00E-01
PR144	1.77E-36	3.86E-38	3.50E-35	1.43E-35	8.22E-36	0.00E-01	0.00E-01	0.00E-01
ND147	2.87E-04	1.73E+01	4.40E-03	4.78E-03	2.81E-03	0.00E-01	0.00E-01	0.00E-01
W 187	8.08E-02	6.24E+01	2.83E-01	2.31E-01	0.00E-01	0.00E-01	0.00E-01	0.00E-01
NP239	8.81E-06	2.55E+00	1.68E-04	1.59E-05	4.98E-05	0.00E-01	0.00E-01	0.00E-01

DOSE TRANSFER FACTORS FOR RADIONUCLIDES IN EFFLUENT WATER

AGE = TEENAGER
PATHWAY = IRRIGATED STORED FEED--MEAT

	TOTAL BODY	GI-LLI	BONE	LIVER	KIDNEY	THYROID	LUNG	SKIN
				(mrem gal)/(Ci min)				
H 3	9.85E-01	9.85E-01	0.00E-01	9.85E-01	9.85E-01	9.85E-01	9.85E-01	0.00E-01
C 14	5.17E+03	5.17E+03	2.58E+04	5.17E+03	5.17E+03	5.17E+03	5.17E+03	0.00E-01
NA 24	2.74E-08	2.74E-08	2.74E-08	2.74E-08	2.74E-08	2.74E-08	2.74E-08	0.00E-01
P 32	3.71E+03	8.03E+03	9.56E+04	5.92E+03	0.00E-01	0.00E-01	0.00E-01	0.00E-01
CR 51	1.35E-01	2.26E+01	0.00E-01	0.00E-01	2.95E-02	7.48E-02	1.92E-01	0.00E-01
MN 54	3.22E+01	3.33E+02	0.00E-01	1.62E+02	4.84E+01	0.00E-01	0.00E-01	0.00E-01
MN 56	4.47E-29	1.65E-26	0.00E-01	2.51E-28	3.18E-28	0.00E-01	0.00E-01	0.00E-01
FE 55	9.06E+02	1.68E+03	5.48E+03	3.89E+03	0.00E-01	0.00E-01	2.47E+03	0.00E-01
FE 59	4.53E+03	2.77E+04	5.03E+03	1.17E+04	0.00E-01	0.00E-01	3.70E+03	0.00E-01
CO 58	7.62E+02	4.56E+03	0.00E-01	3.31E+02	0.00E-01	0.00E-01	0.00E-01	0.00E-01
CO 60	3.03E+03	1.75E+04	0.00E-01	1.35E+03	0.00E-01	0.00E-01	0.00E-01	0.00E-01
NI 63	1.20E+04	3.98E+03	3.54E+05	2.50E+04	0.00E-01	0.00E-01	0.00E-01	0.00E-01
NI 65	4.49E-27	5.34E-25	7.71E-26	9.85E-27	0.00E-01	0.00E-01	0.00E-01	0.00E-01
CU 64	2.29E-12	3.77E-10	0.00E-01	4.86E-12	1.23E-11	0.00E-01	0.00E-01	0.00E-01
ZN 65	9.59E+03	8.71E+03	5.92E+03	2.06E+04	1.32E+04	0.00E-01	0.00E-01	0.00E-01
ZN 69	2.74E-29	7.21E-28	2.05E-28	3.91E-28	2.56E-28	0.00E-01	0.00E-01	0.00E-01
BR 83	2.72E-27	0.00E-01	0.00E-01	0.00E-01	0.00E-01	0.00E-01	0.00E-01	0.00E-01
BR 84	2.76E-28	0.00E-01	0.00E-01	0.00E-01	0.00E-01	0.00E-01	0.00E-01	0.00E-01
BR 85	1.94E-36	0.00E-01	0.00E-01	0.00E-01	0.00E-01	0.00E-01	0.00E-01	0.00E-01
RB 86	4.61E+03	1.45E+03	0.00E-01	9.81E+03	0.00E-01	0.00E-01	0.00E-01	0.00E-01
RB 88	4.17E-29	6.70E-36	0.00E-01	7.82E-29	0.00E-01	0.00E-01	0.00E-01	0.00E-01
RB 89	2.05E-29	4.45E-38	0.00E-01	2.90E-29	0.00E-01	0.00E-01	0.00E-01	0.00E-01
SR 89	1.75E+02	7.26E+02	6.10E+03	0.00E-01	0.00E-01	0.00E-01	0.00E-01	0.00E-01
SR 90	7.68E+03	8.77E+03	3.84E+05	0.00E-01	0.00E-01	0.00E-01	0.00E-01	0.00E-01
SR 91	1.13E-16	1.28E-14	2.83E-15	0.00E-01	0.00E-01	0.00E-01	0.00E-01	0.00E-01
SR 92	1.67E-28	9.95E-26	3.91E-27	0.00E-01	0.00E-01	0.00E-01	0.00E-01	0.00E-01
Y 90	5.92E-05	1.81E+01	2.20E-03	0.00E-01	0.00E-01	0.00E-01	0.00E-01	0.00E-01
Y 91M	8.26E-33	1.02E-29	2.16E-31	0.00E-01	0.00E-01	0.00E-01	0.00E-01	0.00E-01
Y 91	6.04E-01	9.23E+03	2.25E+01	0.00E-01	0.00E-01	0.00E-01	0.00E-01	0.00E-01
Y 92	4.76E-31	4.51E-25	1.64E-29	0.00E-01	0.00E-01	0.00E-01	0.00E-01	0.00E-01
Y 93	2.39E-18	2.66E-12	8.71E-17	0.00E-01	0.00E-01	0.00E-01	0.00E-01	0.00E-01
ZR 95	7.67E+00	2.57E+04	3.53E+01	1.11E+01	1.64E+01	0.00E-01	0.00E-01	0.00E-01
ZR 97	3.68E-11	2.17E-05	4.04E-10	8.00E-11	1.21E-10	0.00E-01	0.00E-01	0.00E-01
NB 95	1.31E+01	1.02E+05	4.28E+01	2.38E+01	2.30E+01	0.00E-01	0.00E-01	0.00E-01
MO 99	3.77E-01	3.54E+00	0.00E-01	1.98E+00	4.53E+00	0.00E-01	0.00E-01	0.00E-01
TC 99M	2.86E-24	1.45E-22	7.90E-26	2.20E-25	3.28E-24	0.00E-01	1.22E-25	0.00E-01
TC101	2.60E-29	4.52E-37	1.86E-30	2.64E-30	4.78E-29	0.00E-01	1.61E-30	0.00E-01

DOSE TRANSFER FACTORS FOR RADIONUCLIDES IN EFFLUENT WATER

AGE = TEENAGER
PATHWAY = IRRIGATED STORED FEED--MEAT

	TOTAL BODY	GI-LLI	BONE	LIVER	KIDNEY	THYROID	LUNG	SKIN
				(mrem gal)/(Ci min)				
RU103	8.70E+02	1.70E+05	2.04E+03	0.00E-01	7.18E+03	0.00E-01	0.00E-01	0.00E-01
RU105	1.30E-26	2.70E-23	3.34E-26	0.00E-01	4.21E-25	0.00E-01	0.00E-01	0.00E-01
RU106	6.89E+03	2.62E+06	5.47E+04	0.00E-01	1.05E+05	0.00E-01	0.00E-01	0.00E-01
AG110M	6.80E+01	3.14E+04	1.18E+02	1.12E+02	2.13E+02	0.00E-01	0.00E-01	0.00E-01
TE125M	9.75E+02	2.15E+04	7.30E+03	2.63E+03	0.00E-01	2.04E+03	0.00E-01	0.00E-01
TE127M	2.70E+03	5.67E+04	2.27E+04	8.06E+03	9.21E+04	5.41E+03	0.00E-01	0.00E-01
TE127	8.99E-16	3.23E-13	4.18E-15	1.48E-15	1.69E-14	2.88E-15	0.00E-01	0.00E-01
TE129M	3.63E+03	8.60E+04	2.29E+04	8.50E+03	9.59E+04	7.39E+03	0.00E-01	0.00E-01
TE129	5.47E-28	1.23E-26	2.25E-27	8.39E-28	9.44E-27	1.61E-27	0.00E-01	0.00E-01
TE131M	3.60E-03	3.47E-01	9.01E-03	4.32E-03	4.50E-02	6.50E-03	0.00E-01	0.00E-01
TE131	5.47E-29	1.44E-29	1.75E-28	7.21E-29	7.65E-28	1.35E-28	0.00E-01	0.00E-01
TE132	1.68E+01	5.67E+02	2.82E+01	1.79E+01	1.72E+02	1.89E+01	0.00E-01	0.00E-01
I 130	8.90E-12	1.71E-11	7.70E-12	2.23E-11	3.43E-11	1.82E-09	0.00E-01	0.00E-01
I 131	3.24E+01	1.19E+01	4.31E+01	6.03E+01	1.04E+02	1.76E+04	0.00E-01	0.00E-01
I 132	1.31E-27	1.59E-27	1.40E-27	3.66E-27	5.76E-27	1.23E-25	0.00E-01	0.00E-01
I 133	7.63E-07	1.89E-06	1.47E-06	2.50E-06	4.39E-06	3.49E-04	0.00E-01	0.00E-01
I 134	1.63E-28	5.98E-30	1.71E-28	4.54E-28	7.15E-28	7.56E-27	0.00E-01	0.00E-01
I 135	1.40E-22	4.18E-22	1.47E-22	3.78E-22	5.96E-22	2.43E-20	0.00E-01	0.00E-01
CS134	1.32E+04	3.53E+02	1.21E+04	2.84E+04	9.02E+03	0.00E-01	3.44E+03	0.00E-01
CS136	5.95E+02	7.13E+01	2.25E+02	8.87E+02	4.83E+02	0.00E-01	7.61E+01	0.00E-01
CS137	7.76E+03	3.17E+02	1.67E+04	2.23E+04	7.58E+03	0.00E-01	2.95E+03	0.00E-01
CS138	4.51E-29	4.09E-32	4.69E-29	9.01E-29	6.65E-29	0.00E-01	7.74E-30	0.00E-01
BA139	1.10E-29	3.36E-27	3.76E-28	2.65E-31	2.49E-31	0.00E-01	1.82E-31	0.00E-01
BA140	3.70E+01	8.84E+02	5.73E+02	7.03E-01	2.38E-01	0.00E-01	4.73E-01	0.00E-01
BA141	2.29E-31	1.46E-35	6.86E-30	5.12E-33	4.76E-33	0.00E-01	3.51E-33	0.00E-01
BA142	2.20E-32	1.10E-42	3.57E-31	3.57E-34	3.02E-34	0.00E-01	2.38E-34	0.00E-01
LA140	9.71E-08	2.10E-02	7.43E-07	3.65E-07	0.00E-01	0.00E-01	0.00E-01	0.00E-01
LA142	3.96E-33	4.84E-28	3.58E-32	1.59E-32	0.00E-01	0.00E-01	0.00E-01	0.00E-01
CE141	2.16E-02	5.37E+02	2.81E-01	1.88E-01	8.83E-02	0.00E-01	0.00E-01	0.00E-01
CE143	3.45E-08	9.28E-03	4.24E-07	3.09E-04	1.38E-07	0.00E-01	0.00E-01	0.00E-01
CE144	1.53E+00	7.15E+03	2.84E+01	1.18E+01	7.02E+00	0.00E-01	0.00E-01	0.00E-01
PR143	2.13E-02	1.41E+03	4.27E-01	1.71E-01	9.92E-02	0.00E-01	0.00E-01	0.00E-01
PR144	2.71E-34	5.89E-36	5.34E-33	2.19E-33	1.26E-33	0.00E-01	0.00E-01	0.00E-01
ND147	9.98E-03	6.01E+02	1.53E-01	1.67E-01	9.79E-02	0.00E-01	0.00E-01	0.00E-01
W 187	1.25E-07	9.64E-05	4.37E-07	3.56E-07	0.00E-01	0.00E-01	0.00E-01	0.00E-01
NP239	2.89E-07	8.38E-02	5.52E-06	5.21E-07	1.63E-06	0.00E-01	0.00E-01	0.00E-01

DOSE TRANSFER FACTORS FOR RADIONUCLIDES IN EFFLUENT WATER

AGE = TEENAGER
PATHWAY = ANIMAL DRINKING WATER--MILK

	TOTAL BODY	GI-LLI	BONE	LIVER	KIDNEY	THYROID	LUNG	SKIN
				(mrem gal)/(Ci min)				
H 3	6.61E+00	6.61E+00	0.00E-01	6.61E+00	6.61E+00	6.61E+00	6.61E+00	0.00E-01
C 14	1.17E+02	1.17E+02	5.87E+02	1.17E+02	1.17E+02	1.17E+02	1.17E+02	0.00E-01
NA 24	1.16E+02	1.16E+02	1.16E+02	1.16E+02	1.16E+02	1.16E+02	1.16E+02	0.00E-01
P 32	2.92E+03	6.33E+03	7.53E+04	4.66E+03	0.00E-01	0.00E-01	0.00E-01	0.00E-01
CR 51	9.06E-02	1.52E+01	0.00E-01	0.00E-01	1.99E-02	5.03E-02	1.29E-01	0.00E-01
MN 54	3.51E+00	3.63E+01	0.00E-01	1.77E+01	5.28E+00	0.00E-01	0.00E-01	0.00E-01
MN 56	1.52E-07	5.62E-05	0.00E-01	8.54E-07	1.08E-06	0.00E-01	0.00E-01	0.00E-01
FE 55	9.02E+00	1.67E+01	5.45E+01	3.87E+01	0.00E-01	0.00E-01	2.45E+01	0.00E-01
FE 59	7.41E+01	4.54E+02	8.22E+01	1.92E+02	0.00E-01	0.00E-01	6.05E+01	0.00E-01
CO 58	2.64E+01	1.58E+02	0.00E-01	1.15E+01	0.00E-01	0.00E-01	0.00E-01	0.00E-01
CO 60	7.62E+01	4.40E+02	0.00E-01	3.38E+01	0.00E-01	0.00E-01	0.00E-01	0.00E-01
NI 63	4.84E+02	1.61E+02	1.43E+04	1.01E+03	0.00E-01	0.00E-01	0.00E-01	0.00E-01
NI 65	4.94E-06	5.87E-04	8.48E-05	1.08E-05	0.00E-01	0.00E-01	0.00E-01	0.00E-01
CU 64	6.25E-01	1.03E+02	0.00E-01	1.33E+00	3.36E+00	0.00E-01	0.00E-01	0.00E-01
ZN 65	4.36E+03	3.95E+03	2.69E+03	9.34E+03	5.98E+03	0.00E-01	0.00E-01	0.00E-01
ZN 69	2.58E-16	6.80E-15	1.94E-15	3.69E-15	2.41E-15	0.00E-01	0.00E-01	0.00E-01
BR 83	2.35E-05	0.00E-01	0.00E-01	0.00E-01	0.00E-01	0.00E-01	0.00E-01	0.00E-01
BR 84	1.03E-25	0.00E-01	0.00E-01	0.00E-01	0.00E-01	0.00E-01	0.00E-01	0.00E-01
BR 85	8.05E-33	0.00E-01	0.00E-01	0.00E-01	0.00E-01	0.00E-01	0.00E-01	0.00E-01
RB 86	4.69E+03	1.48E+03	0.00E-01	9.98E+03	0.00E-01	0.00E-01	0.00E-01	0.00E-01
RB 88	1.40E-26	2.25E-33	0.00E-01	2.62E-26	0.00E-01	0.00E-01	0.00E-01	0.00E-01
RB 89	8.07E-27	1.75E-35	0.00E-01	1.14E-26	0.00E-01	0.00E-01	0.00E-01	0.00E-01
SR 89	1.18E+02	4.91E+02	4.12E+03	0.00E-01	0.00E-01	0.00E-01	0.00E-01	0.00E-01
SR 90	1.96E+03	2.24E+03	9.83E+04	0.00E-01	0.00E-01	0.00E-01	0.00E-01	0.00E-01
SR 91	8.61E-02	9.82E+00	2.16E+00	0.00E-01	0.00E-01	0.00E-01	0.00E-01	0.00E-01
SR 92	4.56E-06	2.72E-03	1.07E-04	0.00E-01	0.00E-01	0.00E-01	0.00E-01	0.00E-01
Y 90	2.62E-05	8.02E+00	9.72E-04	0.00E-01	0.00E-01	0.00E-01	0.00E-01	0.00E-01
Y 91M	8.39E-25	1.04E-21	2.19E-23	0.00E-01	0.00E-01	0.00E-01	0.00E-01	0.00E-01
Y 91	6.34E-04	9.69E+00	2.36E-02	0.00E-01	0.00E-01	0.00E-01	0.00E-01	0.00E-01
Y 92	2.97E-10	2.82E-04	1.03E-08	0.00E-01	0.00E-01	0.00E-01	0.00E-01	0.00E-01
Y 93	4.35E-07	4.85E-01	1.59E-05	0.00E-01	0.00E-01	0.00E-01	0.00E-01	0.00E-01
ZR 95	5.27E-04	1.77E+00	2.43E-03	7.66E-04	1.12E-03	0.00E-01	0.00E-01	0.00E-01
ZR 97	1.74E-06	1.02E+00	1.91E-05	3.78E-06	5.73E-06	0.00E-01	0.00E-01	0.00E-01
NB 95	7.26E-02	5.64E+02	2.38E-01	1.32E-01	1.28E-01	0.00E-01	0.00E-01	0.00E-01
MO 99	6.21E+01	5.83E+02	0.00E-01	3.25E+02	7.45E+02	0.00E-01	0.00E-01	0.00E-01
TC 99M	1.28E-02	6.47E-01	3.53E-04	9.86E-04	1.47E-02	0.00E-01	5.47E-04	0.00E-01
TC101	7.08E-28	1.23E-35	5.07E-29	7.21E-29	1.30E-27	0.00E-01	4.39E-29	0.00E-01

DOSE TRANSFER FACTORS FOR RADIONUCLIDES IN EFFLUENT WATER

AGE = TEENAGER
PATHWAY = ANIMAL DRINKING WATER--MILK

	TOTAL BODY	GI-LLI	BONE	LIVER	KIDNEY	THYROID	LUNG	SKIN
				(mrem gal)/(Ci min)				
RU103	1.27E-03	2.48E-01	2.96E-03	0.00E-01	1.04E-02	0.00E-01	0.00E-01	0.00E-01
RU105	4.82E-08	1.00E-04	1.24E-07	0.00E-01	1.57E-06	0.00E-01	0.00E-01	0.00E-01
RU106	5.93E-03	2.26E+00	4.70E-02	0.00E-01	9.07E-02	0.00E-01	0.00E-01	0.00E-01
AG110M	7.07E+01	3.26E+04	1.23E+02	1.16E+02	2.21E+02	0.00E-01	0.00E-01	0.00E-01
TE125M	6.02E+00	1.33E+02	4.50E+01	1.62E+01	0.00E-01	1.26E+01	0.00E-01	0.00E-01
TE127M	1.37E+01	2.86E+02	1.15E+02	4.08E+01	4.66E+02	2.73E+01	0.00E-01	0.00E-01
TE127	1.08E-02	3.88E+00	5.03E-02	1.78E-02	2.04E-01	3.47E-02	0.00E-01	0.00E-01
TE129M	2.98E+01	7.07E+02	1.88E+02	6.98E+01	7.87E+02	6.07E+01	0.00E-01	0.00E-01
TE129	2.52E-14	5.66E-13	1.03E-13	3.86E-14	4.34E-13	7.39E-14	0.00E-01	0.00E-01
TE131M	3.79E+00	3.64E+02	9.47E+00	4.54E+00	4.73E+01	6.83E+00	0.00E-01	0.00E-01
TE131	1.75E-28	4.59E-29	5.60E-28	2.31E-28	2.45E-27	4.31E-28	0.00E-01	0.00E-01
TE132	1.62E+01	5.46E+02	2.72E+01	1.72E+01	1.65E+02	1.82E+01	0.00E-01	0.00E-01
I 130	5.49E+00	1.06E+01	4.75E+00	1.37E+01	2.12E+01	1.12E+03	0.00E-01	0.00E-01
I 131	2.67E+02	9.82E+01	3.54E+02	4.96E+02	8.54E+02	1.45E+05	0.00E-01	0.00E-01
I 132	7.33E-06	8.89E-06	7.80E-06	2.04E-05	3.22E-05	6.88E-04	0.00E-01	0.00E-01
I 133	1.47E+01	3.65E+01	2.84E+01	4.82E+01	8.45E+01	6.73E+03	0.00E-01	0.00E-01
I 134	1.41E-16	5.16E-18	1.48E-16	3.91E-16	6.17E-16	6.52E-15	0.00E-01	0.00E-01
I 135	2.44E-01	7.29E-01	2.55E-01	6.57E-01	1.04E+00	4.23E+01	0.00E-01	0.00E-01
CS134	1.32E+04	3.53E+02	1.21E+04	2.84E+04	9.03E+03	0.00E-01	3.45E+03	0.00E-01
CS136	2.94E+03	3.53E+02	1.11E+03	4.38E+03	2.39E+03	0.00E-01	3.76E+02	0.00E-01
CS137	7.50E+03	3.06E+02	1.62E+04	2.15E+04	7.33E+03	0.00E-01	2.85E+03	0.00E-01
CS138	2.60E-26	2.36E-29	2.71E-26	5.20E-26	3.84E-26	0.00E-01	4.46E-27	0.00E-01
BA139	3.67E-13	1.12E-10	1.26E-11	8.87E-15	8.36E-15	0.00E-01	6.11E-15	0.00E-01
BA140	7.89E+00	1.89E+02	1.22E+02	1.50E-01	5.09E-02	0.00E-01	1.01E-01	0.00E-01
BA141	9.71E-30	6.20E-34	2.91E-28	2.17E-31	2.02E-31	0.00E-01	1.49E-31	0.00E-01
BA142	1.59E-30	7.93E-41	2.58E-29	2.58E-32	2.19E-32	0.00E-01	1.72E-32	0.00E-01
LA140	1.18E-05	2.55E+00	9.02E-05	4.43E-05	0.00E-01	0.00E-01	0.00E-01	0.00E-01
LA142	3.16E-16	3.87E-11	2.86E-15	1.27E-15	0.00E-01	0.00E-01	0.00E-01	0.00E-01
CE141	1.18E-03	2.93E+01	1.53E-02	1.02E-02	4.82E-03	0.00E-01	0.00E-01	0.00E-01
CE143	8.25E-05	2.22E+01	1.02E-03	7.39E-01	3.31E-04	0.00E-01	0.00E-01	0.00E-01
CE144	4.48E-02	2.10E+02	8.34E-01	3.45E-01	2.06E-01	0.00E-01	0.00E-01	0.00E-01
PR143	3.54E-05	2.34E+00	7.11E-04	2.84E-04	1.65E-04	0.00E-01	0.00E-01	0.00E-01
PR144	1.03E-34	2.25E-36	2.04E-33	8.35E-34	4.79E-34	0.00E-01	0.00E-01	0.00E-01
ND147	3.24E-05	1.95E+00	4.97E-04	5.41E-04	3.18E-04	0.00E-01	0.00E-01	0.00E-01
W 187	6.07E-02	4.69E+01	2.13E-01	1.73E-01	0.00E-01	0.00E-01	0.00E-01	0.00E-01
NP239	3.05E-06	8.83E-01	5.82E-05	5.49E-06	1.72E-05	0.00E-01	0.00E-01	0.00E-01

DOSE TRANSFER FACTORS FOR RADIONUCLIDES IN EFFLUENT WATER

AGE = TEENAGER
PATHWAY = ANIMAL DRINKING WATER--MEAT

	TOTAL BODY	GI-LLI	BONE	LIVER	KIDNEY	THYROID	LUNG	SKIN
				(mrem gal)/(Ci min)				
H 3	9.85E-01	9.85E-01	0.00E-01	9.85E-01	9.85E-01	9.85E-01	9.85E-01	0.00E-01
C 14	4.10E+01	4.10E+01	2.05E+02	4.10E+01	4.10E+01	4.10E+01	4.10E+01	0.00E-01
NA 24	2.66E-08	2.66E-08	2.66E-08	2.66E-08	2.66E-08	2.66E-08	2.66E-08	0.00E-01
P 32	3.04E+02	6.59E+02	7.84E+03	4.86E+02	0.00E-01	0.00E-01	0.00E-01	0.00E-01
CR 51	8.53E-03	1.43E+00	0.00E-01	0.00E-01	1.87E-03	4.74E-03	1.22E-02	0.00E-01
MN 54	1.46E+00	1.51E+01	0.00E-01	7.36E+00	2.20E+00	0.00E-01	0.00E-01	0.00E-01
MN 56	2.45E-28	9.07E-26	0.00E-01	1.38E-27	1.74E-27	0.00E-01	0.00E-01	0.00E-01
FE 55	4.02E+01	7.46E+01	2.43E+02	1.72E+02	0.00E-01	0.00E-01	1.09E+02	0.00E-01
FE 59	2.53E+02	1.55E+03	2.80E+02	6.54E+02	0.00E-01	0.00E-01	2.06E+02	0.00E-01
CO 58	3.90E+01	2.34E+02	0.00E-01	1.69E+01	0.00E-01	0.00E-01	0.00E-01	0.00E-01
CO 60	1.33E+02	7.70E+02	0.00E-01	5.91E+01	0.00E-01	0.00E-01	0.00E-01	0.00E-01
NI 63	5.18E+02	1.72E+02	1.53E+04	1.08E+03	0.00E-01	0.00E-01	0.00E-01	0.00E-01
NI 65	2.51E-26	2.98E-24	4.31E-25	5.50E-26	0.00E-01	0.00E-01	0.00E-01	0.00E-01
CU 64	2.62E-12	4.32E-10	0.00E-01	5.56E-12	1.41E-11	0.00E-01	0.00E-01	0.00E-01
ZN 65	4.31E+02	3.91E+02	2.66E+02	9.24E+02	5.92E+02	0.00E-01	0.00E-01	0.00E-01
ZN 69	4.04E-28	1.06E-26	3.03E-27	5.78E-27	3.77E-27	0.00E-01	0.00E-01	0.00E-01
BR 83	1.60E-26	0.00E-01	0.00E-01	0.00E-01	0.00E-01	0.00E-01	0.00E-01	0.00E-01
BR 84	7.26E-27	0.00E-01	0.00E-01	0.00E-01	0.00E-01	0.00E-01	0.00E-01	0.00E-01
BR 85	5.67E-34	0.00E-01	0.00E-01	0.00E-01	0.00E-01	0.00E-01	0.00E-01	0.00E-01
RB 86	3.37E+02	1.06E+02	0.00E-01	7.17E+02	0.00E-01	0.00E-01	0.00E-01	0.00E-01
RB 88	1.96E-27	3.15E-34	0.00E-01	3.67E-27	0.00E-01	0.00E-01	0.00E-01	0.00E-01
RB 89	1.13E-27	2.45E-36	0.00E-01	1.60E-27	0.00E-01	0.00E-01	0.00E-01	0.00E-01
SR 89	9.36E+00	3.89E+01	3.27E+02	0.00E-01	0.00E-01	0.00E-01	0.00E-01	0.00E-01
SR 90	1.99E+02	2.28E+02	9.97E+03	0.00E-01	0.00E-01	0.00E-01	0.00E-01	0.00E-01
SR 91	1.70E-16	1.94E-14	4.28E-15	0.00E-01	0.00E-01	0.00E-01	0.00E-01	0.00E-01
SR 92	8.63E-28	5.16E-25	2.02E-26	0.00E-01	0.00E-01	0.00E-01	0.00E-01	0.00E-01
Y 90	1.54E-05	4.70E+00	5.70E-04	0.00E-01	0.00E-01	0.00E-01	0.00E-01	0.00E-01
Y 91M	1.40E-31	1.73E-28	3.66E-30	0.00E-01	0.00E-01	0.00E-01	0.00E-01	0.00E-01
Y 91	3.19E-02	4.88E+02	1.19E+00	0.00E-01	0.00E-01	0.00E-01	0.00E-01	0.00E-01
Y 92	1.89E-30	1.79E-24	6.54E-29	0.00E-01	0.00E-01	0.00E-01	0.00E-01	0.00E-01
Y 93	3.41E-18	3.80E-12	1.24E-16	0.00E-01	0.00E-01	0.00E-01	0.00E-01	0.00E-01
ZR 95	3.99E-01	1.34E+03	1.84E+00	5.81E-01	8.53E-01	0.00E-01	0.00E-01	0.00E-01
ZR 97	3.20E-11	1.88E-05	3.51E-10	6.95E-11	1.05E-10	0.00E-01	0.00E-01	0.00E-01
NB 95	7.72E-01	6.00E+03	2.53E+00	1.40E+00	1.36E+00	0.00E-01	0.00E-01	0.00E-01
MO 99	9.56E-02	8.97E-01	0.00E-01	5.01E-01	1.15E+00	0.00E-01	0.00E-01	0.00E-01
TC 99M	6.74E-24	3.42E-22	1.87E-25	5.20E-25	7.75E-24	0.00E-01	2.89E-25	0.00E-01
TC101	1.53E-27	2.67E-35	1.10E-28	1.56E-28	2.82E-27	0.00E-01	9.51E-29	0.00E-01

DOSE TRANSFER FACTORS FOR RADIONUCLIDES IN EFFLUENT WATER

AGE = TEENAGER
PATHWAY = ANIMAL DRINKING WATER--MEAT

	TOTAL BODY	GI-LLI	BONE	LIVER	KIDNEY	THYROID	LUNG	SKIN
				(mrem gal)/(Ci min)				
RU103	4.99E+01	9.76E+03	1.17E+02	0.00E-01	4.12E+02	0.00E-01	0.00E-01	0.00E-01
RU105	4.13E-26	8.60E-23	1.06E-25	0.00E-01	1.34E-24	0.00E-01	0.00E-01	0.00E-01
RU106	3.10E+02	1.18E+05	2.46E+03	0.00E-01	4.75E+03	0.00E-01	0.00E-01	0.00E-01
AG110M	3.10E+00	1.43E+03	5.38E+00	5.09E+00	9.70E+00	0.00E-01	0.00E-01	0.00E-01
TE125M	5.06E+01	1.12E+03	3.79E+02	1.36E+02	0.00E-01	1.06E+02	0.00E-01	0.00E-01
TE127M	1.27E+02	2.66E+03	1.07E+03	3.79E+02	4.33E+03	2.54E+02	0.00E-01	0.00E-01
TE127	1.38E-15	4.94E-13	6.40E-15	2.27E-15	2.59E-14	4.41E-15	0.00E-01	0.00E-01
TE129M	2.14E+02	5.08E+03	1.35E+03	5.02E+02	5.66E+03	4.37E+02	0.00E-01	0.00E-01
TE129	6.59E-27	1.48E-25	2.71E-26	1.01E-26	1.14E-25	1.94E-26	0.00E-01	0.00E-01
TE131M	1.82E-03	1.75E-01	4.55E-03	2.18E-03	2.28E-02	3.28E-03	0.00E-01	0.00E-01
TE131	1.82E-27	4.79E-28	5.84E-27	2.41E-27	2.55E-26	4.50E-27	0.00E-01	0.00E-01
TE132	3.69E+00	1.24E+02	6.19E+00	3.92E+00	3.76E+01	4.13E+00	0.00E-01	0.00E-01
I 130	1.04E-11	2.01E-11	9.04E-12	2.62E-11	4.03E-11	2.13E-09	0.00E-01	0.00E-01
I 131	3.70E+00	1.36E+00	4.91E+00	6.88E+00	1.18E+01	2.01E+03	0.00E-01	0.00E-01
I 132	8.03E-27	9.74E-27	8.55E-27	2.24E-26	3.52E-26	7.54E-25	0.00E-01	0.00E-01
I 133	5.44E-07	1.35E-06	1.05E-06	1.78E-06	3.13E-06	2.49E-04	0.00E-01	0.00E-01
I 134	2.61E-27	9.57E-29	2.74E-27	7.26E-27	1.14E-26	1.21E-25	0.00E-01	0.00E-01
I 135	3.02E-22	9.04E-22	3.17E-22	8.16E-22	1.29E-21	5.25E-20	0.00E-01	0.00E-01
CS134	5.85E+02	1.57E+01	5.36E+02	1.26E+03	4.01E+02	0.00E-01	1.53E+02	0.00E-01
CS136	5.13E+01	6.15E+00	1.94E+01	7.64E+01	4.16E+01	0.00E-01	6.56E+00	0.00E-01
CS137	3.38E+02	1.38E+01	7.30E+02	9.71E+02	3.30E+02	0.00E-01	1.28E+02	0.00E-01
CS138	1.17E-27	1.06E-30	1.22E-27	2.35E-27	1.73E-27	0.00E-01	2.01E-28	0.00E-01
BA139	1.12E-28	3.42E-26	3.84E-27	2.70E-30	2.55E-30	0.00E-01	1.86E-30	0.00E-01
BA140	3.22E+00	7.72E+01	5.00E+01	6.13E-02	2.08E-02	0.00E-01	4.12E-02	0.00E-01
BA141	1.05E-29	6.72E-34	3.15E-28	2.35E-31	2.18E-31	0.00E-01	1.61E-31	0.00E-01
BA142	1.72E-30	8.59E-41	2.80E-29	2.80E-32	2.37E-32	0.00E-01	1.86E-32	0.00E-01
LA140	3.77E-08	8.14E-03	2.89E-07	1.42E-07	0.00E-01	0.00E-01	0.00E-01	0.00E-01
LA142	3.61E-32	4.41E-27	3.26E-31	1.45E-31	0.00E-01	0.00E-01	0.00E-01	0.00E-01
CE141	1.30E-03	3.24E+01	1.70E-02	1.13E-02	5.33E-03	0.00E-01	0.00E-01	0.00E-01
CE143	1.60E-08	4.30E-03	1.96E-07	1.43E-04	6.41E-08	0.00E-01	0.00E-01	0.00E-01
CE144	6.97E-02	3.26E+02	1.30E+00	5.37E-01	3.21E-01	0.00E-01	0.00E-01	0.00E-01
PR143	1.80E-03	1.19E+02	3.62E-02	1.44E-02	8.39E-03	0.00E-01	0.00E-01	0.00E-01
PR144	1.32E-32	2.86E-34	2.60E-31	1.06E-31	6.10E-32	0.00E-01	0.00E-01	0.00E-01
ND147	9.40E-04	5.66E+01	1.44E-02	1.57E-02	9.22E-03	0.00E-01	0.00E-01	0.00E-01
W 187	7.81E-08	6.03E-05	2.74E-07	2.23E-07	0.00E-01	0.00E-01	0.00E-01	0.00E-01
NP239	8.34E-08	2.42E-02	1.59E-06	1.50E-07	4.71E-07	0.00E-01	0.00E-01	0.00E-01

DOSE TRANSFER FACTORS FOR RADIONUCLIDES IN EFFLUENT WATER

AGE = TEENAGER
PATHWAY = RIVER SHORELINE DEPOSITS

	TOTAL BODY	GI-LLI	BONE	LIVER	KIDNEY	THYROID	LUNG	SKIN
				(mrem gal)/(Ci min)				
H 3	0.00E-01	0.00E-01	0.00E-01	0.00E-01	0.00E-01	0.00E-01	0.00E-01	0.00E-01
C 14	0.00E-01	0.00E-01	0.00E-01	0.00E-01	0.00E-01	0.00E-01	0.00E-01	0.00E-01
NA 24	1.05E+01	1.05E+01	1.05E+01	1.05E+01	1.05E+01	1.05E+01	1.05E+01	1.22E+01
P 32	0.00E-01	0.00E-01	0.00E-01	0.00E-01	0.00E-01	0.00E-01	0.00E-01	0.00E-01
CR 51	4.09E+00	4.09E+00	4.09E+00	4.09E+00	4.09E+00	4.09E+00	4.09E+00	4.84E+00
MN 54	1.22E+03	1.22E+03	1.22E+03	1.22E+03	1.22E+03	1.22E+03	1.22E+03	1.43E+03
MN 56	7.70E-01	7.70E-01	7.70E-01	7.70E-01	7.70E-01	7.70E-01	7.70E-01	9.10E-01
FE 55	0.00E-01	0.00E-01	0.00E-01	0.00E-01	0.00E-01	0.00E-01	0.00E-01	0.00E-01
FE 59	2.40E+02	2.40E+02	2.40E+02	2.40E+02	2.40E+02	2.40E+02	2.40E+02	2.82E+02
CO 58	3.34E+02	3.34E+02	3.34E+02	3.34E+02	3.34E+02	3.34E+02	3.34E+02	3.91E+02
CO 60	1.89E+04	1.89E+04	1.89E+04	1.89E+04	1.89E+04	1.89E+04	1.89E+04	2.22E+04
NI 63	0.00E-01	0.00E-01	0.00E-01	0.00E-01	0.00E-01	0.00E-01	0.00E-01	0.00E-01
NI 65	2.54E-01	2.54E-01	2.54E-01	2.54E-01	2.54E-01	2.54E-01	2.54E-01	2.95E-01
CU 64	5.29E-01	5.29E-01	5.29E-01	5.29E-01	5.29E-01	5.29E-01	5.29E-01	6.00E-01
ZN 65	6.56E+02	6.56E+02	6.56E+02	6.56E+02	6.56E+02	6.56E+02	6.56E+02	7.54E+02
ZN 69	0.00E-01	0.00E-01	0.00E-01	0.00E-01	0.00E-01	0.00E-01	0.00E-01	0.00E-01
BR 83	4.16E-03	4.16E-03	4.16E-03	4.16E-03	4.16E-03	4.16E-03	4.16E-03	6.05E-03
BR 84	1.56E-01	1.56E-01	1.56E-01	1.56E-01	1.56E-01	1.56E-01	1.56E-01	1.83E-01
BR 85	0.00E-01	0.00E-01	0.00E-01	0.00E-01	0.00E-01	0.00E-01	0.00E-01	0.00E-01
RB 86	7.92E+00	7.92E+00	7.92E+00	7.92E+00	7.92E+00	7.92E+00	7.92E+00	9.05E+00
RB 88	2.31E-02	2.31E-02	2.31E-02	2.31E-02	2.31E-02	2.31E-02	2.31E-02	2.64E-02
RB 89	8.14E-02	8.14E-02	8.14E-02	8.14E-02	8.14E-02	8.14E-02	8.14E-02	9.76E-02
SR 89	1.90E-02	1.90E-02	1.90E-02	1.90E-02	1.90E-02	1.90E-02	1.90E-02	2.21E-02
SR 90	0.00E-01	0.00E-01	0.00E-01	0.00E-01	0.00E-01	0.00E-01	0.00E-01	0.00E-01
SR 91	1.87E+00	1.87E+00	1.87E+00	1.87E+00	1.87E+00	1.87E+00	1.87E+00	2.19E+00
SR 92	6.66E-01	6.66E-01	6.66E-01	6.66E-01	6.66E-01	6.66E-01	6.66E-01	7.40E-01
Y 90	3.95E-03	3.95E-03	3.95E-03	3.95E-03	3.95E-03	3.95E-03	3.95E-03	4.67E-03
Y 91M	8.09E-02	8.09E-02	8.09E-02	8.09E-02	8.09E-02	8.09E-02	8.09E-02	9.36E-02
Y 91	9.45E-01	9.45E-01	9.45E-01	9.45E-01	9.45E-01	9.45E-01	9.45E-01	1.06E+00
Y 92	1.56E-01	1.56E-01	1.56E-01	1.56E-01	1.56E-01	1.56E-01	1.56E-01	1.85E-01
Y 93	1.60E-01	1.60E-01	1.60E-01	1.60E-01	1.60E-01	1.60E-01	1.60E-01	2.19E-01
ZR 95	2.16E+02	2.16E+02	2.16E+02	2.16E+02	2.16E+02	2.16E+02	2.16E+02	2.50E+02
ZR 97	2.59E+00	2.59E+00	2.59E+00	2.59E+00	2.59E+00	2.59E+00	2.59E+00	3.02E+00
NB 95	1.21E+02	1.21E+02	1.21E+02	1.21E+02	1.21E+02	1.21E+02	1.21E+02	1.42E+02
MO 99	3.51E+00	3.51E+00	3.51E+00	3.51E+00	3.51E+00	3.51E+00	3.51E+00	4.06E+00
TC 99M	1.60E-01	1.60E-01	1.60E-01	1.60E-01	1.60E-01	1.60E-01	1.60E-01	1.83E-01
TC101	1.33E-02	1.33E-02	1.33E-02	1.33E-02	1.33E-02	1.33E-02	1.33E-02	1.48E-02

DOSE TRANSFER FACTORS FOR RADIONUCLIDES IN EFFLUENT WATER

AGE = TEENAGER
PATHWAY = RIVER SHORELINE DEPOSITS

	TOTAL BODY	GI-LLI	BONE	LIVER	KIDNEY	THYROID	LUNG	SKIN
				(mrem gal)/(Ci min)				
RU103	9.52E+01	9.52E+01	9.52E+01	9.52E+01	9.52E+01	9.52E+01	9.52E+01	1.11E+02
RU105	5.50E-01	5.50E-01	5.50E-01	5.50E-01	5.50E-01	5.50E-01	5.50E-01	6.24E-01
RU106	3.71E+02	3.71E+02	3.71E+02	3.71E+02	3.71E+02	3.71E+02	3.71E+02	4.45E+02
AG110M	3.03E+03	3.03E+03	3.03E+03	3.03E+03	3.03E+03	3.03E+03	3.03E+03	3.54E+03
TE125M	1.37E+00	1.37E+00	1.37E+00	1.37E+00	1.37E+00	1.37E+00	1.37E+00	1.88E+00
TE127M	8.06E-02	8.06E-02	8.06E-02	8.06E-02	8.06E-02	8.06E-02	8.06E-02	9.53E-02
TE127	2.60E-03	2.60E-03	2.60E-03	2.60E-03	2.60E-03	2.60E-03	2.60E-03	2.86E-03
TE129M	1.74E+01	1.74E+01	1.74E+01	1.74E+01	1.74E+01	1.74E+01	1.74E+01	2.03E+01
TE129	2.17E-02	2.17E-02	2.17E-02	2.17E-02	2.17E-02	2.17E-02	2.17E-02	2.57E-02
TE131M	7.04E+00	7.04E+00	7.04E+00	7.04E+00	7.04E+00	7.04E+00	7.04E+00	8.30E+00
TE131	2.18E-02	2.18E-02	2.18E-02	2.18E-02	2.18E-02	2.18E-02	2.18E-02	2.58E+01
TE132	3.72E+00	3.72E+00	3.72E+00	3.72E+00	3.72E+00	3.72E+00	3.72E+00	4.38E+00
I 130	4.81E+00	4.81E+00	4.81E+00	4.81E+00	4.81E+00	4.81E+00	4.81E+00	5.84E+00
I 131	1.51E+01	1.51E+01	1.51E+01	1.51E+01	1.51E+01	1.51E+01	1.51E+01	1.84E+01
I 132	1.06E+00	1.06E+00	1.06E+00	1.06E+00	1.06E+00	1.06E+00	1.06E+00	1.25E+00
I 133	2.15E+00	2.15E+00	2.15E+00	2.15E+00	2.15E+00	2.15E+00	2.15E+00	2.62E+00
I 134	3.62E-01	3.62E-01	3.62E-01	3.62E-01	3.62E-01	3.62E-01	3.62E-01	4.30E-01
I 135	2.19E+00	2.19E+00	2.19E+00	2.19E+00	2.19E+00	2.19E+00	2.19E+00	2.56E+00
CS134	6.01E+03	6.01E+03	6.01E+03	6.01E+03	6.01E+03	6.01E+03	6.01E+03	7.01E+03
CS136	1.32E+02	1.32E+02	1.32E+02	1.32E+02	1.32E+02	1.32E+02	1.32E+02	1.50E+02
CS137	9.06E+03	9.06E+03	9.06E+03	9.06E+03	9.06E+03	9.06E+03	9.06E+03	1.06E+04
CS138	2.78E-01	2.78E-01	2.78E-01	2.78E-01	2.78E-01	2.78E-01	2.78E-01	3.18E-01
BA139	8.79E-02	8.79E-02	8.79E-02	8.79E-02	8.79E-02	8.79E-02	8.79E-02	9.89E-02
BA140	1.81E+01	1.81E+01	1.81E+01	1.81E+01	1.81E+01	1.81E+01	1.81E+01	2.06E+01
BA141	2.92E-02	2.92E-02	2.92E-02	2.92E-02	2.92E-02	2.92E-02	2.92E-02	3.33E-02
BA142	2.67E-02	2.67E-02	2.67E-02	2.67E-02	2.67E-02	2.67E-02	2.67E-02	3.05E-02
LA140	1.69E+01	1.69E+01	1.69E+01	1.69E+01	1.69E+01	1.69E+01	1.69E+01	1.91E+01
LA142	6.19E-01	6.19E-01	6.19E-01	6.19E-01	6.19E-01	6.19E-01	6.19E-01	7.43E-01
CE141	1.20E+01	1.20E+01	1.20E+01	1.20E+01	1.20E+01	1.20E+01	1.20E+01	1.35E+01
CE143	2.04E+00	2.04E+00	2.04E+00	2.04E+00	2.04E+00	2.04E+00	2.04E+00	2.32E+00
CE144	6.12E+01	6.12E+01	6.12E+01	6.12E+01	6.12E+01	6.12E+01	6.12E+01	7.08E+01
PR143	0.00E-01	0.00E-01	0.00E-01	0.00E-01	0.00E-01	0.00E-01	0.00E-01	0.00E-01
PR144	1.27E-03	1.27E-03	1.27E-03	1.27E-03	1.27E-03	1.27E-03	1.27E-03	1.46E-03
ND147	7.46E+00	7.46E+00	7.46E+00	7.46E+00	7.46E+00	7.46E+00	7.46E+00	8.95E+00
W 187	2.07E+00	2.07E+00	2.07E+00	2.07E+00	2.07E+00	2.07E+00	2.07E+00	2.40E+00
NP239	1.50E+00	1.50E+00	1.50E+00	1.50E+00	1.50E+00	1.50E+00	1.50E+00	1.74E+00

DOSE TRANSFER FACTORS FOR RADIONUCLIDES IN EFFLUENT WATER

AGE = TEENAGER
PATHWAY = SWIMMING

	TOTAL BODY	GI-LLI	BONE	LIVER	KIDNEY	THYROID	LUNG	SKIN
				(mrem gal)/(Ci min)				
H 3	0.00E-01	0.00E-01	0.00E-01	0.00E-01	0.00E-01	0.00E-01	0.00E-01	0.00E-01
C 14	0.00E-01	0.00E-01	0.00E-01	0.00E-01	0.00E-01	0.00E-01	0.00E-01	0.00E-01
NA 24	1.75E+02	1.75E+02	1.75E+02	1.75E+02	1.75E+02	1.75E+02	1.75E+02	0.00E-01
P 32	1.45E-01	1.45E-01	1.45E-01	1.45E-01	1.45E-01	1.45E-01	1.45E-01	0.00E-01
CR 51	1.17E+00	1.17E+00	1.17E+00	1.17E+00	1.17E+00	1.17E+00	1.17E+00	0.00E-01
MN 54	3.39E+01	3.39E+01	3.39E+01	3.39E+01	3.39E+01	3.39E+01	3.39E+01	0.00E-01
MN 56	7.03E+01	7.03E+01	7.03E+01	7.03E+01	7.03E+01	7.03E+01	7.03E+01	0.00E-01
FE 55	1.44E-03	1.44E-03	1.44E-03	1.44E-03	1.44E-03	1.44E-03	1.44E-03	0.00E-01
FE 59	4.97E+01	4.97E+01	4.97E+01	4.97E+01	4.97E+01	4.97E+01	4.97E+01	0.00E-01
CO 58	4.06E+01	4.06E+01	4.06E+01	4.06E+01	4.06E+01	4.06E+01	4.06E+01	0.00E-01
CO 60	1.04E+02	1.04E+02	1.04E+02	1.04E+02	1.04E+02	1.04E+02	1.04E+02	0.00E-01
NI 63	0.00E-01	0.00E-01	0.00E-01	0.00E-01	0.00E-01	0.00E-01	0.00E-01	0.00E-01
NI 65	2.20E+01	2.20E+01	2.20E+01	2.20E+01	2.20E+01	2.20E+01	2.20E+01	0.00E-01
CU 64	8.31E+00	8.31E+00	8.31E+00	8.31E+00	8.31E+00	8.31E+00	8.31E+00	0.00E-01
ZN 65	2.48E+01	2.48E+01	2.48E+01	2.48E+01	2.48E+01	2.48E+01	2.48E+01	0.00E-01
ZN 69	3.36E-02	3.36E-02	3.36E-02	3.36E-02	3.36E-02	3.36E-02	3.36E-02	0.00E-01
BR 83	3.73E-01	3.73E-01	3.73E-01	3.73E-01	3.73E-01	3.73E-01	3.73E-01	0.00E-01
BR 84	6.93E+01	6.93E+01	6.93E+01	6.93E+01	6.93E+01	6.93E+01	6.93E+01	0.00E-01
BR 85	7.41E-02	7.41E-02	7.41E-02	7.41E-02	7.41E-02	7.41E-02	7.41E-02	0.00E-01
RB 86	3.84E+00	3.84E+00	3.84E+00	3.84E+00	3.84E+00	3.84E+00	3.84E+00	0.00E-01
RB 88	2.15E+01	2.15E+01	2.15E+01	2.15E+01	2.15E+01	2.15E+01	2.15E+01	0.00E-01
RB 89	7.74E+01	7.74E+01	7.74E+01	7.74E+01	7.74E+01	7.74E+01	7.74E+01	0.00E-01
SR 89	1.04E-01	1.04E-01	1.04E-01	1.04E-01	1.04E-01	1.04E-01	1.04E-01	0.00E-01
SR 90	1.22E-02	1.22E-02	1.22E-02	1.22E-02	1.22E-02	1.22E-02	1.22E-02	0.00E-01
SR 91	4.26E+01	4.26E+01	4.26E+01	4.26E+01	4.26E+01	4.26E+01	4.26E+01	0.00E-01
SR 92	5.72E+01	5.72E+01	5.72E+01	5.72E+01	5.72E+01	5.72E+01	5.72E+01	0.00E-01
Y 90	2.93E-01	2.93E-01	2.93E-01	2.93E-01	2.93E-01	2.93E-01	2.93E-01	0.00E-01
Y 91M	2.08E+01	2.08E+01	2.08E+01	2.08E+01	2.08E+01	2.08E+01	2.08E+01	0.00E-01
Y 91	1.51E-01	1.51E-01	1.51E-01	1.51E-01	1.51E-01	1.51E-01	1.51E-01	0.00E-01
Y 92	1.02E+01	1.02E+01	1.02E+01	1.02E+01	1.02E+01	1.02E+01	1.02E+01	0.00E-01
Y 93	4.26E+00	4.26E+00	4.26E+00	4.26E+00	4.26E+00	4.26E+00	4.26E+00	0.00E-01
ZR 95	3.39E+01	3.39E+01	3.39E+01	3.39E+01	3.39E+01	3.39E+01	3.39E+01	0.00E-01
ZR 97	3.37E+01	3.37E+01	3.37E+01	3.37E+01	3.37E+01	3.37E+01	3.37E+01	0.00E-01
NB 95	3.16E+01	3.16E+01	3.16E+01	3.16E+01	3.16E+01	3.16E+01	3.16E+01	0.00E-01
MO 99	1.06E+01	1.06E+01	1.06E+01	1.06E+01	1.06E+01	1.06E+01	1.06E+01	0.00E-01
TC 99M	5.36E+00	5.36E+00	5.36E+00	5.36E+00	5.36E+00	5.36E+00	5.36E+00	0.00E-01
TC101	1.14E+01	1.14E+01	1.14E+01	1.14E+01	1.14E+01	1.14E+01	1.14E+01	0.00E-01

DOSE TRANSFER FACTORS FOR RADIONUCLIDES IN EFFLUENT WATER

AGE = TEENAGER
PATHWAY = SWIMMING

	TOTAL BODY	GI-LLI	BONE	LIVER	KIDNEY	THYROID	LUNG	SKIN
				(mrem gal)/(Ci min)				
RU103	2.01E+01	2.01E+01	2.01E+01	2.01E+01	2.01E+01	2.01E+01	2.01E+01	0.00E-01
RU105	2.67E+01	2.67E+01	2.67E+01	2.67E+01	2.67E+01	2.67E+01	2.67E+01	0.00E-01
RU106	8.58E+00	8.58E+00	8.58E+00	8.58E+00	8.58E+00	8.58E+00	8.58E+00	0.00E-01
AG110M	1.11E+02	1.11E+02	1.11E+02	1.11E+02	1.11E+02	1.11E+02	1.11E+02	0.00E-01
TE125M	8.33E-02	8.33E-02	8.33E-02	8.33E-02	8.33E-02	8.33E-02	8.33E-02	0.00E-01
TE127M	5.87E-03	5.87E-03	5.87E-03	5.87E-03	5.87E-03	5.87E-03	5.87E-03	0.00E-01
TE127	6.28E-02	6.28E-02	6.28E-02	6.28E-02	6.28E-02	6.28E-02	6.28E-02	0.00E-01
TE129M	4.74E+00	4.74E+00	4.74E+00	4.74E+00	4.74E+00	4.74E+00	4.74E+00	0.00E-01
TE129	4.04E+00	4.04E+00	4.04E+00	4.04E+00	4.04E+00	4.04E+00	4.04E+00	0.00E-01
TE131M	4.96E+01	4.96E+01	4.96E+01	4.96E+01	4.96E+01	4.96E+01	4.96E+01	0.00E-01
TE131	1.41E+01	1.41E+01	1.41E+01	1.41E+01	1.41E+01	1.41E+01	1.41E+01	0.00E-01
TE132	9.02E+00	9.02E+00	9.02E+00	9.02E+00	9.02E+00	9.02E+00	9.02E+00	0.00E-01
I 130	8.76E+01	8.76E+01	8.76E+01	8.76E+01	8.76E+01	8.76E+01	8.76E+01	0.00E-01
I 131	1.76E+01	1.76E+01	1.76E+01	1.76E+01	1.76E+01	1.76E+01	1.76E+01	0.00E-01
I 132	9.64E+01	9.64E+01	9.64E+01	9.64E+01	9.64E+01	9.64E+01	9.64E+01	0.00E-01
I 133	2.16E+01	2.16E+01	2.16E+01	2.16E+01	2.16E+01	2.16E+01	2.16E+01	0.00E-01
I 134	8.76E+01	8.76E+01	8.76E+01	8.76E+01	8.76E+01	8.76E+01	8.76E+01	0.00E-01
I 135	7.37E+01	7.37E+01	7.37E+01	7.37E+01	7.37E+01	7.37E+01	7.37E+01	0.00E-01
CS134	6.55E+01	6.55E+01	6.55E+01	6.55E+01	6.55E+01	6.55E+01	6.55E+01	0.00E-01
CS136	9.26E+01	9.26E+01	9.26E+01	9.26E+01	9.26E+01	9.26E+01	9.26E+01	0.00E-01
CS137	2.26E+01	2.26E+01	2.26E+01	2.26E+01	2.26E+01	2.26E+01	2.26E+01	0.00E-01
CS138	7.94E+01	7.94E+01	7.94E+01	7.94E+01	7.94E+01	7.94E+01	7.94E+01	0.00E-01
BA139	1.65E+00	1.65E+00	1.65E+00	1.65E+00	1.65E+00	1.65E+00	1.65E+00	0.00E-01
BA140	1.11E+01	1.11E+01	1.11E+01	1.11E+01	1.11E+01	1.11E+01	1.11E+01	0.00E-01
BA141	1.98E+01	1.98E+01	1.98E+01	1.98E+01	1.98E+01	1.98E+01	1.98E+01	0.00E-01
BA142	3.37E+01	3.37E+01	3.37E+01	3.37E+01	3.37E+01	3.37E+01	3.37E+01	0.00E-01
LA140	9.24E+01	9.24E+01	9.24E+01	9.24E+01	9.24E+01	9.24E+01	9.24E+01	0.00E-01
LA142	9.71E+01	9.71E+01	9.71E+01	9.71E+01	9.71E+01	9.71E+01	9.71E+01	0.00E-01
CE141	2.93E+00	2.93E+00	2.93E+00	2.93E+00	2.93E+00	2.93E+00	2.93E+00	0.00E-01
CE143	1.28E+01	1.28E+01	1.28E+01	1.28E+01	1.28E+01	1.28E+01	1.28E+01	0.00E-01
CE144	1.94E+00	1.94E+00	1.94E+00	1.94E+00	1.94E+00	1.94E+00	1.94E+00	0.00E-01
PR143	3.61E-02	3.61E-02	3.61E-02	3.61E-02	3.61E-02	3.61E-02	3.61E-02	0.00E-01
PR144	9.94E-01	9.94E-01	9.94E-01	9.94E-01	9.94E-01	9.94E-01	9.94E-01	0.00E-01
ND147	6.32E+00	6.32E+00	6.32E+00	6.32E+00	6.32E+00	6.32E+00	6.32E+00	0.00E-01
W 187	1.87E+01	1.87E+01	1.87E+01	1.87E+01	1.87E+01	1.87E+01	1.87E+01	0.00E-01
NP239	5.41E+00	5.41E+00	5.41E+00	5.41E+00	5.41E+00	5.41E+00	5.41E+00	0.00E-01

DOSE TRANSFER FACTORS FOR RADIONUCLIDES IN EFFLUENT WATER

AGE = TEENAGER
PATHWAY = BOATING

	TOTAL BODY	GI-LLI	BONE	LIVER	KIDNEY	THYROID	LUNG	SKIN
				(mrem gal)/(Ci min)				
H 3	0.00E-01	0.00E-01	0.00E-01	0.00E-01	0.00E-01	0.00E-01	0.00E-01	0.00E-01
C 14	0.00E-01	0.00E-01	0.00E-01	0.00E-01	0.00E-01	0.00E-01	0.00E-01	0.00E-01
NA 24	1.01E+02	1.01E+02	1.01E+02	1.01E+02	1.01E+02	1.01E+02	1.01E+02	0.00E-01
P 32	8.35E-02	8.35E-02	8.35E-02	8.35E-02	8.35E-02	8.35E-02	8.35E-02	0.00E-01
CR 51	6.78E-01	6.78E-01	6.78E-01	6.78E-01	6.78E-01	6.78E-01	6.78E-01	0.00E-01
MN 54	1.96E+01	1.96E+01	1.96E+01	1.96E+01	1.96E+01	1.96E+01	1.96E+01	0.00E-01
MN 56	4.06E+01	4.06E+01	4.06E+01	4.06E+01	4.06E+01	4.06E+01	4.06E+01	0.00E-01
FE 55	8.35E-04	8.35E-04	8.35E-04	8.35E-04	8.35E-04	8.35E-04	8.35E-04	0.00E-01
FE 59	2.87E+01	2.87E+01	2.87E+01	2.87E+01	2.87E+01	2.87E+01	2.87E+01	0.00E-01
CO 58	2.35E+01	2.35E+01	2.35E+01	2.35E+01	2.35E+01	2.35E+01	2.35E+01	0.00E-01
CO 60	6.00E+01	6.00E+01	6.00E+01	6.00E+01	6.00E+01	6.00E+01	6.00E+01	0.00E-01
NI 63	0.00E-01	0.00E-01	0.00E-01	0.00E-01	0.00E-01	0.00E-01	0.00E-01	0.00E-01
NI 65	1.27E+01	1.27E+01	1.27E+01	1.27E+01	1.27E+01	1.27E+01	1.27E+01	0.00E-01
CU 64	4.80E+00	4.80E+00	4.80E+00	4.80E+00	4.80E+00	4.80E+00	4.80E+00	0.00E-01
ZN 65	1.44E+01	1.44E+01	1.44E+01	1.44E+01	1.44E+01	1.44E+01	1.44E+01	0.00E-01
ZN 69	1.94E-02	1.94E-02	1.94E-02	1.94E-02	1.94E-02	1.94E-02	1.94E-02	0.00E-01
BR 83	2.15E-01	2.15E-01	2.15E-01	2.15E-01	2.15E-01	2.15E-01	2.15E-01	0.00E-01
BR 84	4.01E+01	4.01E+01	4.01E+01	4.01E+01	4.01E+01	4.01E+01	4.01E+01	0.00E-01
BR 85	4.28E-02	4.28E-02	4.28E-02	4.28E-02	4.28E-02	4.28E-02	4.28E-02	0.00E-01
RB 86	2.22E+00	2.22E+00	2.22E+00	2.22E+00	2.22E+00	2.22E+00	2.22E+00	0.00E-01
RB 88	1.24E+01	1.24E+01	1.24E+01	1.24E+01	1.24E+01	1.24E+01	1.24E+01	0.00E-01
RB 89	4.47E+01	4.47E+01	4.47E+01	4.47E+01	4.47E+01	4.47E+01	4.47E+01	0.00E-01
SR 89	6.00E-02	6.00E-02	6.00E-02	6.00E-02	6.00E-02	6.00E-02	6.00E-02	0.00E-01
SR 90	7.04E-03	7.04E-03	7.04E-03	7.04E-03	7.04E-03	7.04E-03	7.04E-03	0.00E-01
SR 91	2.46E+01	2.46E+01	2.46E+01	2.46E+01	2.46E+01	2.46E+01	2.46E+01	0.00E-01
SR 92	3.31E+01	3.31E+01	3.31E+01	3.31E+01	3.31E+01	3.31E+01	3.31E+01	0.00E-01
Y 90	1.69E-01	1.69E-01	1.69E-01	1.69E-01	1.69E-01	1.69E-01	1.69E-01	0.00E-01
Y 91M	1.20E+01	1.20E+01	1.20E+01	1.20E+01	1.20E+01	1.20E+01	1.20E+01	0.00E-01
Y 91	8.74E-02	8.74E-02	8.74E-02	8.74E-02	8.74E-02	8.74E-02	8.74E-02	0.00E-01
Y 92	5.89E+00	5.89E+00	5.89E+00	5.89E+00	5.89E+00	5.89E+00	5.89E+00	0.00E-01
Y 93	2.46E+00	2.46E+00	2.46E+00	2.46E+00	2.46E+00	2.46E+00	2.46E+00	0.00E-01
ZR 95	1.96E+01	1.96E+01	1.96E+01	1.96E+01	1.96E+01	1.96E+01	1.96E+01	0.00E-01
ZR 97	1.95E+01	1.95E+01	1.95E+01	1.95E+01	1.95E+01	1.95E+01	1.95E+01	0.00E-01
NB 95	1.83E+01	1.83E+01	1.83E+01	1.83E+01	1.83E+01	1.83E+01	1.83E+01	0.00E-01
MO 99	6.12E+00	6.12E+00	6.12E+00	6.12E+00	6.12E+00	6.12E+00	6.12E+00	0.00E-01
TC 99M	3.10E+00	3.10E+00	3.10E+00	3.10E+00	3.10E+00	3.10E+00	3.10E+00	0.00E-01
TC101	6.62E+00	6.62E+00	6.62E+00	6.62E+00	6.62E+00	6.62E+00	6.62E+00	0.00E-01

DOSE TRANSFER FACTORS FOR RADIONUCLIDES IN EFFLUENT WATER

AGE = TEENAGER
PATHWAY = BOATING

	TOTAL BODY	GI-LLI	BONE	LIVER	KIDNEY	THYROID	LUNG	SKIN
				(mrem gal)/(Ci min)				
RU103	1.16E+01	1.16E+01	1.16E+01	1.16E+01	1.16E+01	1.16E+01	1.16E+01	0.00E-01
RU105	1.54E+01	1.54E+01	1.54E+01	1.54E+01	1.54E+01	1.54E+01	1.54E+01	0.00E-01
RU106	4.96E+00	4.96E+00	4.96E+00	4.96E+00	4.96E+00	4.96E+00	4.96E+00	0.00E-01
AG110M	6.39E+01	6.39E+01	6.39E+01	6.39E+01	6.39E+01	6.39E+01	6.39E+01	0.00E-01
TE125M	4.81E-02	4.81E-02	4.81E-02	4.81E-02	4.81E-02	4.81E-02	4.81E-02	0.00E-01
TE127M	3.39E-03	3.39E-03	3.39E-03	3.39E-03	3.39E-03	3.39E-03	3.39E-03	0.00E-01
TE127	3.63E-02	3.63E-02	3.63E-02	3.63E-02	3.63E-02	3.63E-02	3.63E-02	0.00E-01
TE129M	2.74E+00	2.74E+00	2.74E+00	2.74E+00	2.74E+00	2.74E+00	2.74E+00	0.00E-01
TE129	2.34E+00	2.34E+00	2.34E+00	2.34E+00	2.34E+00	2.34E+00	2.34E+00	0.00E-01
TE131M	2.86E+01	2.86E+01	2.86E+01	2.86E+01	2.86E+01	2.86E+01	2.86E+01	0.00E-01
TE131	8.18E+00	8.18E+00	8.18E+00	8.18E+00	8.18E+00	8.18E+00	8.18E+00	0.00E-01
TE132	5.21E+00	5.21E+00	5.21E+00	5.21E+00	5.21E+00	5.21E+00	5.21E+00	0.00E-01
I 130	5.06E+01	5.06E+01	5.06E+01	5.06E+01	5.06E+01	5.06E+01	5.06E+01	0.00E-01
I 131	1.02E+01	1.02E+01	1.02E+01	1.02E+01	1.02E+01	1.02E+01	1.02E+01	0.00E-01
I 132	5.57E+01	5.57E+01	5.57E+01	5.57E+01	5.57E+01	5.57E+01	5.57E+01	0.00E-01
I 133	1.25E+01	1.25E+01	1.25E+01	1.25E+01	1.25E+01	1.25E+01	1.25E+01	0.00E-01
I 134	5.06E+01	5.06E+01	5.06E+01	5.06E+01	5.06E+01	5.06E+01	5.06E+01	0.00E-01
I 135	4.26E+01	4.26E+01	4.26E+01	4.26E+01	4.26E+01	4.26E+01	4.26E+01	0.00E-01
CS134	3.78E+01	3.78E+01	3.78E+01	3.78E+01	3.78E+01	3.78E+01	3.78E+01	0.00E-01
CS136	5.35E+01	5.35E+01	5.35E+01	5.35E+01	5.35E+01	5.35E+01	5.35E+01	0.00E-01
CS137	1.31E+01	1.31E+01	1.31E+01	1.31E+01	1.31E+01	1.31E+01	1.31E+01	0.00E-01
CS138	4.59E+01	4.59E+01	4.59E+01	4.59E+01	4.59E+01	4.59E+01	4.59E+01	0.00E-01
BA139	9.55E-01	9.55E-01	9.55E-01	9.55E-01	9.55E-01	9.55E-01	9.55E-01	0.00E-01
BA140	6.39E+00	6.39E+00	6.39E+00	6.39E+00	6.39E+00	6.39E+00	6.39E+00	0.00E-01
BA141	1.14E+01	1.14E+01	1.14E+01	1.14E+01	1.14E+01	1.14E+01	1.14E+01	0.00E-01
BA142	1.95E+01	1.95E+01	1.95E+01	1.95E+01	1.95E+01	1.95E+01	1.95E+01	0.00E-01
LA140	5.34E+01	5.34E+01	5.34E+01	5.34E+01	5.34E+01	5.34E+01	5.34E+01	0.00E-01
LA142	5.61E+01	5.61E+01	5.61E+01	5.61E+01	5.61E+01	5.61E+01	5.61E+01	0.00E-01
CE141	1.70E+00	1.70E+00	1.70E+00	1.70E+00	1.70E+00	1.70E+00	1.70E+00	0.00E-01
CE143	7.42E+00	7.42E+00	7.42E+00	7.42E+00	7.42E+00	7.42E+00	7.42E+00	0.00E-01
CE144	1.12E+00	1.12E+00	1.12E+00	1.12E+00	1.12E+00	1.12E+00	1.12E+00	0.00E-01
PR143	2.09E-02	2.09E-02	2.09E-02	2.09E-02	2.09E-02	2.09E-02	2.09E-02	0.00E-01
PR144	5.74E-01	5.74E-01	5.74E-01	5.74E-01	5.74E-01	5.74E-01	5.74E-01	0.00E-01
ND147	3.65E+00	3.65E+00	3.65E+00	3.65E+00	3.65E+00	3.65E+00	3.65E+00	0.00E-01
W 187	1.08E+01	1.08E+01	1.08E+01	1.08E+01	1.08E+01	1.08E+01	1.08E+01	0.00E-01
NP239	3.13E+00	3.13E+00	3.13E+00	3.13E+00	3.13E+00	3.13E+00	3.13E+00	0.00E-01

DOSE TRANSFER FACTORS FOR RADIONUCLIDES IN EFFLUENT WATER

AGE = CHILD
PATHWAY = POTABLE WATER

	TOTAL BODY	GI-LLI	BONE	LIVER	KIDNEY	THYROID	LUNG	SKIN
				(mrem gal)/(Ci min)				
H 3	2.97E+01	2.97E+01	0.00E-01	2.97E+01	2.97E+01	2.97E+01	2.97E+01	0.00E-01
C 14	6.19E+02	6.19E+02	3.10E+03	6.19E+02	6.19E+02	6.19E+02	6.19E+02	0.00E-01
NA 24	4.91E+02	4.91E+02	4.91E+02	4.91E+02	4.91E+02	4.91E+02	4.91E+02	0.00E-01
P 32	7.75E+03	5.56E+03	2.01E+05	9.41E+03	0.00E-01	0.00E-01	0.00E-01	0.00E-01
CR 51	2.22E+00	1.18E+02	0.00E-01	0.00E-01	3.37E-01	1.23E+00	2.25E+00	0.00E-01
MN 54	7.28E+02	2.29E+03	0.00E-01	2.73E+03	7.66E+02	0.00E-01	0.00E-01	0.00E-01
MN 56	2.96E-02	1.90E+01	0.00E-01	1.31E-01	1.59E-01	0.00E-01	0.00E-01	0.00E-01
FE 55	4.83E+02	2.89E+02	2.94E+03	1.56E+03	0.00E-01	0.00E-01	8.82E+02	0.00E-01
FE 59	3.35E+03	7.00E+03	4.16E+03	6.73E+03	0.00E-01	0.00E-01	1.95E+03	0.00E-01
CO 58	1.40E+03	2.66E+03	0.00E-01	4.56E+02	0.00E-01	0.00E-01	0.00E-01	0.00E-01
CO 60	3.99E+03	7.50E+03	0.00E-01	1.35E+03	0.00E-01	0.00E-01	0.00E-01	0.00E-01
NI 63	4.68E+03	4.96E+02	1.38E+05	7.37E+03	0.00E-01	0.00E-01	0.00E-01	0.00E-01
NI 65	4.24E-02	8.90E+00	7.72E-01	7.27E-02	0.00E-01	0.00E-01	0.00E-01	0.00E-01
CU 64	1.02E+01	7.91E+02	0.00E-01	1.69E+01	4.07E+01	0.00E-01	0.00E-01	0.00E-01
ZN 65	5.79E+03	1.64E+03	3.50E+03	9.31E+03	5.87E+03	0.00E-01	0.00E-01	0.00E-01
ZN 69	3.61E-08	2.47E-05	2.71E-07	3.91E-07	2.37E-07	0.00E-01	0.00E-01	0.00E-01
BR 83	4.17E-02	0.00E-01	0.00E-01	0.00E-01	0.00E-01	0.00E-01	0.00E-01	0.00E-01
BR 84	0.00E-01	0.00E-01	0.00E-01	0.00E-01	0.00E-01	0.00E-01	0.00E-01	0.00E-01
BR 85	0.00E-01	0.00E-01	0.00E-01	0.00E-01	0.00E-01	0.00E-01	0.00E-01	0.00E-01
RB 86	1.02E+04	1.06E+03	0.00E-01	1.65E+04	0.00E-01	0.00E-01	0.00E-01	0.00E-01
RB 88	0.00E-01	0.00E-01	0.00E-01	0.00E-01	0.00E-01	0.00E-01	0.00E-01	0.00E-01
RB 89	0.00E-01	0.00E-01	0.00E-01	0.00E-01	0.00E-01	0.00E-01	0.00E-01	0.00E-01
SR 89	9.52E+03	1.29E+04	3.33E+05	0.00E-01	0.00E-01	0.00E-01	0.00E-01	0.00E-01
SR 90	1.32E+05	5.86E+04	6.55E+06	0.00E-01	0.00E-01	0.00E-01	0.00E-01	0.00E-01
SR 91	4.01E+01	2.35E+03	1.06E+03	0.00E-01	0.00E-01	0.00E-01	0.00E-01	0.00E-01
SR 92	2.01E-01	9.48E+01	5.01E+00	0.00E-01	0.00E-01	0.00E-01	0.00E-01	0.00E-01
Y 90	2.17E-01	2.31E+04	8.12E+00	0.00E-01	0.00E-01	0.00E-01	0.00E-01	0.00E-01
Y 91M	0.00E-01	0.00E-01	0.00E-01	0.00E-01	0.00E-01	0.00E-01	0.00E-01	0.00E-01
Y 91	4.07E+00	2.03E+04	1.52E+02	0.00E-01	0.00E-01	0.00E-01	0.00E-01	0.00E-01
Y 92	2.44E-04	2.46E+02	8.52E-03	0.00E-01	0.00E-01	0.00E-01	0.00E-01	0.00E-01
Y 93	1.54E-02	8.35E+03	5.60E-01	0.00E-01	0.00E-01	0.00E-01	0.00E-01	0.00E-01
ZR 95	5.75E+00	6.73E+03	2.94E+01	6.46E+00	9.24E+00	0.00E-01	0.00E-01	0.00E-01
ZR 97	5.70E-02	1.46E+04	6.68E-01	9.65E-02	1.39E-01	0.00E-01	0.00E-01	0.00E-01
NB 95	1.57E+00	4.06E+03	5.65E+00	2.20E+00	2.07E+00	0.00E-01	0.00E-01	0.00E-01
MO 99	6.54E+02	2.19E+03	0.00E-01	2.64E+03	5.65E+03	0.00E-01	0.00E-01	0.00E-01
TC 99M	4.84E-01	1.66E+01	1.49E-02	2.92E-02	4.24E-01	0.00E-01	1.48E-02	0.00E-01
TC101	0.00E-01	0.00E-01	0.00E-01	0.00E-01	0.00E-01	0.00E-01	0.00E-01	0.00E-01

DOSE TRANSFER FACTORS FOR RADIONUCLIDES IN EFFLUENT WATER

AGE = CHILD
PATHWAY = POTABLE WATER

	TOTAL BODY	GI-LLI	BONE	LIVER	KIDNEY	THYROID	LUNG	SKIN
				(mrem gal)/(Ci min)				
RU103	7.07E+01	4.75E+03	1.84E+02	0.00E-01	4.63E+02	0.00E-01	0.00E-01	0.00E-01
RU105	1.41E-01	2.53E+02	3.88E-01	0.00E-01	3.41E+00	0.00E-01	0.00E-01	0.00E-01
RU106	3.73E+02	4.65E+04	2.99E+03	0.00E-01	4.04E+03	0.00E-01	0.00E-01	0.00E-01
AG110M	7.43E+01	1.10E+04	1.38E+02	9.29E+01	1.73E+02	0.00E-01	0.00E-01	0.00E-01
TE125M	3.84E+02	2.78E+03	2.88E+03	7.81E+02	0.00E-01	8.09E+02	0.00E-01	0.00E-01
TE127M	8.72E+02	5.95E+03	7.35E+03	1.98E+03	2.09E+04	1.76E+03	0.00E-01	0.00E-01
TE127	4.36E+00	7.94E+02	2.03E+01	5.48E+00	5.78E+01	1.41E+01	0.00E-01	0.00E-01
TE129M	1.89E+03	1.49E+04	1.22E+04	3.41E+03	3.58E+04	3.94E+03	0.00E-01	0.00E-01
TE129	4.81E-06	1.26E-03	2.02E-05	5.65E-06	5.92E-05	1.44E-05	0.00E-01	0.00E-01
TE131M	3.89E+02	1.48E+04	1.06E+03	3.66E+02	3.54E+03	7.52E+02	0.00E-01	0.00E-01
TE131	0.00E-01	0.00E-01	0.00E-01	0.00E-01	0.00E-01	0.00E-01	0.00E-01	0.00E-01
TE132	1.12E+03	9.31E+03	2.09E+03	9.25E+02	8.59E+03	1.35E+03	0.00E-01	0.00E-01
I 130	2.02E+02	1.83E+02	1.94E+02	3.92E+02	5.86E+02	4.32E+04	0.00E-01	0.00E-01
I 131	2.31E+03	3.61E+02	4.04E+03	4.06E+03	6.67E+03	1.34E+06	0.00E-01	0.00E-01
I 132	1.25E-01	3.20E-01	1.48E-01	2.72E-01	4.17E-01	1.26E+01	0.00E-01	0.00E-01
I 133	3.19E+02	3.39E+02	6.81E+02	8.42E+02	1.40E+03	1.56E+05	0.00E-01	0.00E-01
I 134	5.09E-07	7.34E-07	5.96E-07	1.11E-06	1.69E-06	2.55E-05	0.00E-01	0.00E-01
I 135	3.06E+01	4.93E+01	3.59E+01	6.47E+01	9.92E+01	5.73E+03	0.00E-01	0.00E-01
CS134	2.07E+04	5.29E+02	5.98E+04	9.82E+04	3.04E+04	0.00E-01	1.09E+04	0.00E-01
CS136	1.01E+04	5.51E+02	5.70E+03	1.57E+04	8.35E+03	0.00E-01	1.24E+03	0.00E-01
CS137	1.18E+04	5.02E+02	8.37E+04	8.01E+04	2.61E+04	0.00E-01	9.39E+03	0.00E-01
CS138	0.00E-01	0.00E-01	0.00E-01	0.00E-01	0.00E-01	0.00E-01	0.00E-01	0.00E-01
BA139	1.71E-05	3.41E-02	5.91E-04	3.16E-07	2.76E-07	0.00E-01	1.86E-07	0.00E-01
BA140	1.18E+03	1.02E+04	2.01E+04	1.76E+01	5.74E+00	0.00E-01	1.05E+01	0.00E-01
BA141	0.00E-01	0.00E-01	0.00E-01	0.00E-01	0.00E-01	0.00E-01	0.00E-01	0.00E-01
BA142	0.00E-01	0.00E-01	0.00E-01	0.00E-01	0.00E-01	0.00E-01	0.00E-01	0.00E-01
LA140	2.01E-01	1.67E+04	1.71E+00	5.98E-01	0.00E-01	0.00E-01	0.00E-01	0.00E-01
LA142	2.73E-07	1.73E-01	2.74E-06	8.72E-07	0.00E-01	0.00E-01	0.00E-01	0.00E-01
CE141	7.37E-01	6.19E+03	9.94E+00	4.96E+00	2.17E+00	0.00E-01	0.00E-01	0.00E-01
CE143	8.51E-02	8.60E+03	1.08E+00	5.87E+02	2.46E-01	0.00E-01	0.00E-01	0.00E-01
CE144	2.83E+01	4.34E+04	5.31E+02	1.66E+02	9.22E+01	0.00E-01	0.00E-01	0.00E-01
PR143	4.74E-01	1.03E+04	9.56E+00	2.87E+00	1.55E+00	0.00E-01	0.00E-01	0.00E-01
PR144	0.00E-01	0.00E-01	0.00E-01	0.00E-01	0.00E-01	0.00E-01	0.00E-01	0.00E-01
ND147	4.21E-01	8.61E+03	6.71E+00	5.43E+00	2.98E+00	0.00E-01	0.00E-01	0.00E-01
W 187	1.46E+01	4.56E+03	5.48E+01	3.24E+01	0.00E-01	0.00E-01	0.00E-01	0.00E-01
NP239	5.05E-02	5.32E+03	1.00E+00	7.19E-02	2.08E-01	0.00E-01	0.00E-01	0.00E-01

DOSE TRANSFER FACTORS FOR RADIONUCLIDES IN EFFLUENT WATER

AGE = CHILD
PATHWAY = FRESH WATER FISH

	TOTAL BODY	GI-LLI	BONE	LIVER	KIDNEY	THYROID	LUNG	SKIN
				(mrem gal)/(Ci min)				
H 3	3.61E-01	3.61E-01	0.00E-01	3.61E-01	3.61E-01	3.61E-01	3.61E-01	0.00E-01
C 14	3.85E+04	3.85E+04	1.93E+05	3.85E+04	3.85E+04	3.85E+04	3.85E+04	0.00E-01
NA 24	6.61E+02	6.61E+02	6.61E+02	6.61E+02	6.61E+02	6.61E+02	6.61E+02	0.00E-01
P 32	1.05E+07	7.52E+06	2.72E+08	1.27E+07	0.00E-01	0.00E-01	0.00E-01	0.00E-01
CR 51	6.01E+00	3.19E+02	0.00E-01	0.00E-01	9.12E-01	3.34E+00	6.09E+00	0.00E-01
MN 54	3.94E+03	1.24E+04	0.00E-01	1.48E+04	4.15E+03	0.00E-01	0.00E-01	0.00E-01
MN 56	1.56E-01	1.00E+02	0.00E-01	6.91E-01	8.35E-01	0.00E-01	0.00E-01	0.00E-01
FE 55	6.54E+02	3.91E+02	3.98E+03	2.11E+03	0.00E-01	0.00E-01	1.19E+03	0.00E-01
FE 59	4.53E+03	9.48E+03	5.62E+03	9.10E+03	0.00E-01	0.00E-01	2.64E+03	0.00E-01
CO 58	9.45E+02	1.80E+03	0.00E-01	3.09E+02	0.00E-01	0.00E-01	0.00E-01	0.00E-01
CO 60	2.70E+03	5.07E+03	0.00E-01	9.15E+02	0.00E-01	0.00E-01	0.00E-01	0.00E-01
NI 63	6.34E+03	6.72E+02	1.86E+05	9.97E+03	0.00E-01	0.00E-01	0.00E-01	0.00E-01
NI 65	5.58E-02	1.17E+01	1.02E+00	9.57E-02	0.00E-01	0.00E-01	0.00E-01	0.00E-01
CU 64	6.85E+00	5.32E+02	0.00E-01	1.13E+01	2.74E+01	0.00E-01	0.00E-01	0.00E-01
ZN 65	1.57E+05	4.43E+04	9.46E+04	2.52E+05	1.59E+05	0.00E-01	0.00E-01	0.00E-01
ZN 69	9.09E-07	6.20E-04	6.81E-06	9.84E-06	5.97E-06	0.00E-01	0.00E-01	0.00E-01
BR 83	2.30E-01	0.00E-01	0.00E-01	0.00E-01	0.00E-01	0.00E-01	0.00E-01	0.00E-01
BR 84	0.00E-01	0.00E-01	0.00E-01	0.00E-01	0.00E-01	0.00E-01	0.00E-01	0.00E-01
BR 85	0.00E-01	0.00E-01	0.00E-01	0.00E-01	0.00E-01	0.00E-01	0.00E-01	0.00E-01
RB 86	2.75E+05	2.88E+04	0.00E-01	4.47E+05	0.00E-01	0.00E-01	0.00E-01	0.00E-01
RB 88	0.00E-01	0.00E-01	0.00E-01	0.00E-01	0.00E-01	0.00E-01	0.00E-01	0.00E-01
RB 89	0.00E-01	0.00E-01	0.00E-01	0.00E-01	0.00E-01	0.00E-01	0.00E-01	0.00E-01
SR 89	3.86E+03	5.23E+03	1.35E+05	0.00E-01	0.00E-01	0.00E-01	0.00E-01	0.00E-01
SR 90	5.35E+04	2.38E+04	2.66E+06	0.00E-01	0.00E-01	0.00E-01	0.00E-01	0.00E-01
SR 91	1.62E+01	9.46E+02	4.28E+02	0.00E-01	0.00E-01	0.00E-01	0.00E-01	0.00E-01
SR 92	7.94E-02	3.75E+01	1.98E+00	0.00E-01	0.00E-01	0.00E-01	0.00E-01	0.00E-01
Y 90	7.34E-02	7.81E+03	2.74E+00	0.00E-01	0.00E-01	0.00E-01	0.00E-01	0.00E-01
Y 91M	0.00E-01	0.00E-01	0.00E-01	0.00E-01	0.00E-01	0.00E-01	0.00E-01	0.00E-01
Y 91	1.38E+00	6.86E+03	5.15E+01	0.00E-01	0.00E-01	0.00E-01	0.00E-01	0.00E-01
Y 92	8.09E-05	8.17E+01	2.83E-03	0.00E-01	0.00E-01	0.00E-01	0.00E-01	0.00E-01
Y 93	5.17E-03	2.81E+03	1.88E-01	0.00E-01	0.00E-01	0.00E-01	0.00E-01	0.00E-01
ZR 95	2.57E-01	3.01E+02	1.31E+00	2.88E-01	4.12E-01	0.00E-01	0.00E-01	0.00E-01
ZR 97	2.53E-03	6.50E+02	2.97E-02	4.29E-03	6.16E-03	0.00E-01	0.00E-01	0.00E-01
NB 95	6.37E+02	1.65E+06	2.29E+03	8.92E+02	8.38E+02	0.00E-01	0.00E-01	0.00E-01
MO 99	8.84E+01	2.96E+02	0.00E-01	3.57E+02	7.63E+02	0.00E-01	0.00E-01	0.00E-01
TC 99M	9.70E-02	3.33E+00	2.98E-03	5.85E-03	8.51E-02	0.00E-01	2.97E-03	0.00E-01
TC101	0.00E-01	0.00E-01	0.00E-01	0.00E-01	0.00E-01	0.00E-01	0.00E-01	0.00E-01

DOSE TRANSFER FACTORS FOR RADIONUCLIDES IN EFFLUENT WATER

AGE = CHILD
PATHWAY = FRESH WATER FISH

	TOTAL BODY	GI-LLI	BONE	LIVER	KIDNEY	THYROID	LUNG	SKIN
				(mrem gal)/(Ci min)				
RU103	9.56E+00	6.43E+02	2.49E+01	0.00E-01	6.26E+01	0.00E-01	0.00E-01	0.00E-01
RU105	1.88E-02	3.38E+01	5.17E-02	0.00E-01	4.55E-01	0.00E-01	0.00E-01	0.00E-01
RU106	5.05E+01	6.29E+03	4.04E+02	0.00E-01	5.46E+02	0.00E-01	0.00E-01	0.00E-01
AG110M	2.31E+00	3.44E+02	4.28E+00	2.89E+00	5.38E+00	0.00E-01	0.00E-01	0.00E-01
TE125M	2.08E+03	1.50E+04	1.56E+04	4.23E+03	0.00E-01	4.38E+03	0.00E-01	0.00E-01
TE127M	4.72E+03	3.22E+04	3.98E+04	1.07E+04	1.13E+05	9.51E+03	0.00E-01	0.00E-01
TE127	2.34E+01	4.27E+03	1.09E+02	2.95E+01	3.11E+02	7.56E+01	0.00E-01	0.00E-01
TE129M	1.03E+04	8.06E+04	6.61E+04	1.84E+04	1.94E+05	2.13E+04	0.00E-01	0.00E-01
TE129	2.45E-05	6.42E-03	1.03E-04	2.88E-05	3.02E-04	7.36E-05	0.00E-01	0.00E-01
TE131M	2.10E+03	8.01E+04	5.71E+03	1.98E+03	1.91E+04	4.06E+03	0.00E-01	0.00E-01
TE131	0.00E-01	0.00E-01	0.00E-01	0.00E-01	0.00E-01	0.00E-01	0.00E-01	0.00E-01
TE132	6.04E+03	5.03E+04	1.13E+04	5.00E+03	4.64E+04	7.28E+03	0.00E-01	0.00E-01
I 130	4.08E+01	3.70E+01	3.92E+01	7.92E+01	1.18E+02	8.72E+03	0.00E-01	0.00E-01
I 131	4.68E+02	7.33E+01	8.19E+02	8.24E+02	1.35E+03	2.72E+05	0.00E-01	0.00E-01
I 132	2.46E-02	6.31E-02	2.92E-02	5.36E-02	8.20E-02	2.49E+00	0.00E-01	0.00E-01
I 133	6.45E+01	6.87E+01	1.38E+02	1.70E+02	2.84E+02	3.17E+04	0.00E-01	0.00E-01
I 134	9.55E-08	1.38E-07	1.12E-07	2.07E-07	3.17E-07	4.77E-06	0.00E-01	0.00E-01
I 135	6.14E+00	9.90E+00	7.22E+00	1.30E+01	1.99E+01	1.15E+03	0.00E-01	0.00E-01
CS134	5.60E+05	1.43E+04	1.62E+06	2.66E+06	8.23E+05	0.00E-01	2.95E+05	0.00E-01
CS136	2.74E+05	1.49E+04	1.54E+05	4.24E+05	2.26E+05	0.00E-01	3.37E+04	0.00E-01
CS137	3.20E+05	1.36E+04	2.26E+06	2.17E+06	7.06E+05	0.00E-01	2.54E+05	0.00E-01
CS138	0.00E-01	0.00E-01	0.00E-01	0.00E-01	0.00E-01	0.00E-01	0.00E-01	0.00E-01
BA139	8.82E-07	1.76E-03	3.04E-05	1.62E-08	1.42E-08	0.00E-01	9.56E-09	0.00E-01
BA140	6.36E+01	5.52E+02	1.09E+03	9.55E-01	3.11E-01	0.00E-01	5.69E-01	0.00E-01
BA141	0.00E-01	0.00E-01	0.00E-01	0.00E-01	0.00E-01	0.00E-01	0.00E-01	0.00E-01
BA142	0.00E-01	0.00E-01	0.00E-01	0.00E-01	0.00E-01	0.00E-01	0.00E-01	0.00E-01
LA140	6.80E-02	5.63E+03	5.77E-01	2.02E-01	0.00E-01	0.00E-01	0.00E-01	0.00E-01
LA142	8.83E-08	5.59E-02	8.85E-07	2.82E-07	0.00E-01	0.00E-01	0.00E-01	0.00E-01
CE141	9.96E-03	8.37E+01	1.34E-01	6.71E-02	2.94E-02	0.00E-01	0.00E-01	0.00E-01
CE143	1.15E-03	1.16E+02	1.46E-02	7.93E+00	3.32E-03	0.00E-01	0.00E-01	0.00E-01
CE144	3.83E-01	5.87E+02	7.18E+00	2.25E+00	1.25E+00	0.00E-01	0.00E-01	0.00E-01
PR143	1.60E-01	3.49E+03	3.23E+00	9.70E-01	5.25E-01	0.00E-01	0.00E-01	0.00E-01
PR144	0.00E-01	0.00E-01	0.00E-01	0.00E-01	0.00E-01	0.00E-01	0.00E-01	0.00E-01
ND147	1.42E-01	2.91E+03	2.27E+00	1.84E+00	1.01E+00	0.00E-01	0.00E-01	0.00E-01
W 187	2.36E+02	7.38E+04	8.86E+02	5.25E+02	0.00E-01	0.00E-01	0.00E-01	0.00E-01
NP239	6.83E-03	7.19E+02	1.35E-01	9.72E-03	2.81E-02	0.00E-01	0.00E-01	0.00E-01

DOSE TRANSFER FACTORS FOR RADIONUCLIDES IN EFFLUENT WATER

AGE = CHILD
PATHWAY = FRESH WATER INVERTEBRATES

	TOTAL BODY	GI-LLI	BONE	LIVER	KIDNEY	THYROID	LUNG	SKIN
				(mrem gal)/(Ci min)				
H 3	8.90E-02	8.90E-02	0.00E-01	8.90E-02	8.90E-02	8.90E-02	8.90E-02	0.00E-01
C 14	1.88E+04	1.88E+04	9.39E+04	1.88E+04	1.88E+04	1.88E+04	1.88E+04	0.00E-01
NA 24	3.26E+02	3.26E+02	3.26E+02	3.26E+02	3.26E+02	3.26E+02	3.26E+02	0.00E-01
P 32	5.17E+05	3.70E+05	1.34E+07	6.27E+05	0.00E-01	0.00E-01	0.00E-01	0.00E-01
CR 51	1.48E+01	7.85E+02	0.00E-01	0.00E-01	2.25E+00	8.22E+00	1.50E+01	0.00E-01
MN 54	2.18E+05	6.88E+05	0.00E-01	8.20E+05	2.30E+05	0.00E-01	0.00E-01	0.00E-01
MN 56	8.64E+00	5.55E+03	0.00E-01	3.83E+01	4.63E+01	0.00E-01	0.00E-01	0.00E-01
FE 55	5.16E+03	3.08E+03	3.14E+04	1.66E+04	0.00E-01	0.00E-01	9.41E+03	0.00E-01
FE 59	3.57E+04	7.47E+04	4.43E+04	7.18E+04	0.00E-01	0.00E-01	2.08E+04	0.00E-01
CO 58	9.31E+02	1.77E+03	0.00E-01	3.04E+02	0.00E-01	0.00E-01	0.00E-01	0.00E-01
CO 60	2.66E+03	5.00E+03	0.00E-01	9.02E+02	0.00E-01	0.00E-01	0.00E-01	0.00E-01
NI 63	1.56E+03	1.65E+02	4.59E+04	2.46E+03	0.00E-01	0.00E-01	0.00E-01	0.00E-01
NI 65	1.38E-02	2.89E+00	2.50E-01	2.36E-02	0.00E-01	0.00E-01	0.00E-01	0.00E-01
CU 64	1.35E+01	1.05E+03	0.00E-01	2.24E+01	5.40E+01	0.00E-01	0.00E-01	0.00E-01
ZN 65	1.93E+05	5.45E+04	1.16E+05	3.10E+05	1.96E+05	0.00E-01	0.00E-01	0.00E-01
ZN 69	1.12E-06	7.64E-04	8.39E-06	1.21E-05	7.35E-06	0.00E-01	0.00E-01	0.00E-01
BR 83	4.46E-02	0.00E-01	0.00E-01	0.00E-01	0.00E-01	0.00E-01	0.00E-01	0.00E-01
BR 84	0.00E-01	0.00E-01	0.00E-01	0.00E-01	0.00E-01	0.00E-01	0.00E-01	0.00E-01
BR 85	0.00E-01	0.00E-01	0.00E-01	0.00E-01	0.00E-01	0.00E-01	0.00E-01	0.00E-01
RB 86	3.39E+04	3.54E+03	0.00E-01	5.51E+04	0.00E-01	0.00E-01	0.00E-01	0.00E-01
RB 88	0.00E-01	0.00E-01	0.00E-01	0.00E-01	0.00E-01	0.00E-01	0.00E-01	0.00E-01
RB 89	0.00E-01	0.00E-01	0.00E-01	0.00E-01	0.00E-01	0.00E-01	0.00E-01	0.00E-01
SR 89	3.17E+03	4.30E+03	1.11E+05	0.00E-01	0.00E-01	0.00E-01	0.00E-01	0.00E-01
SR 90	4.39E+04	1.95E+04	2.18E+06	0.00E-01	0.00E-01	0.00E-01	0.00E-01	0.00E-01
SR 91	1.33E+01	7.77E+02	3.52E+02	0.00E-01	0.00E-01	0.00E-01	0.00E-01	0.00E-01
SR 92	6.52E-02	3.08E+01	1.63E+00	0.00E-01	0.00E-01	0.00E-01	0.00E-01	0.00E-01
Y 90	7.23E-01	7.69E+04	2.70E+01	0.00E-01	0.00E-01	0.00E-01	0.00E-01	0.00E-01
Y 91M	0.00E-01	0.00E-01	0.00E-01	0.00E-01	0.00E-01	0.00E-01	0.00E-01	0.00E-01
Y 91	1.36E+01	6.76E+04	5.07E+02	0.00E-01	0.00E-01	0.00E-01	0.00E-01	0.00E-01
Y 92	7.97E-04	8.05E+02	2.79E-02	0.00E-01	0.00E-01	0.00E-01	0.00E-01	0.00E-01
Y 93	5.09E-02	2.76E+04	1.85E+00	0.00E-01	0.00E-01	0.00E-01	0.00E-01	0.00E-01
ZR 95	1.28E-01	1.50E+02	6.56E-01	1.44E-01	2.06E-01	0.00E-01	0.00E-01	0.00E-01
ZR 97	1.27E-03	3.25E+02	1.49E-02	2.15E-03	3.08E-03	0.00E-01	0.00E-01	0.00E-01
NB 95	5.24E-01	1.35E+03	1.88E+00	7.33E-01	6.88E-01	0.00E-01	0.00E-01	0.00E-01
MO 99	2.18E+01	7.28E+01	0.00E-01	8.81E+01	1.88E+02	0.00E-01	0.00E-01	0.00E-01
TC 99M	7.97E-03	2.74E-01	2.45E-04	4.81E-04	6.98E-03	0.00E-01	2.44E-04	0.00E-01
TC101	0.00E-01	0.00E-01	0.00E-01	0.00E-01	0.00E-01	0.00E-01	0.00E-01	0.00E-01

DOSE TRANSFER FACTORS FOR RADIONUCLIDES IN EFFLUENT WATER

AGE = CHILD
PATHWAY = FRESH WATER INVERTEBRATES

	TOTAL BODY	GI-LLI	BONE	LIVER	KIDNEY	THYROID	LUNG	SKIN
				(mrem gal)/(Ci min)				
RU103	7.07E+01	4.75E+03	1.84E+02	0.00E-01	4.63E+02	0.00E-01	0.00E-01	0.00E-01
RU105	1.39E-01	2.49E+02	3.82E-01	0.00E-01	3.36E+00	0.00E-01	0.00E-01	0.00E-01
RU106	3.73E+02	4.65E+04	2.99E+03	0.00E-01	4.04E+03	0.00E-01	0.00E-01	0.00E-01
AG110M	1.91E+02	2.84E+04	3.53E+02	2.38E+02	4.44E+02	0.00E-01	0.00E-01	0.00E-01
TE125M	7.81E+03	5.66E+04	5.86E+04	1.59E+04	0.00E-01	1.64E+04	0.00E-01	0.00E-01
TE127M	1.77E+04	1.21E+05	1.49E+05	4.02E+04	4.26E+05	3.57E+04	0.00E-01	0.00E-01
TE127	8.80E+01	1.60E+04	4.10E+02	1.11E+02	1.17E+03	2.84E+02	0.00E-01	0.00E-01
TE129M	3.85E+04	3.03E+05	2.48E+05	6.93E+04	7.29E+05	8.00E+04	0.00E-01	0.00E-01
TE129	9.20E-05	2.41E-02	3.88E-04	1.08E-04	1.14E-03	2.77E-04	0.00E-01	0.00E-01
TE131M	7.90E+03	3.01E+05	2.15E+04	7.42E+03	7.18E+04	1.53E+04	0.00E-01	0.00E-01
TE131	0.00E-01	0.00E-01	0.00E-01	0.00E-01	0.00E-01	0.00E-01	0.00E-01	0.00E-01
TE132	2.27E+04	1.89E+05	4.25E+04	1.88E+04	1.74E+05	2.74E+04	0.00E-01	0.00E-01
I 130	3.35E+00	3.04E+00	3.22E+00	6.50E+00	9.72E+00	7.16E+02	0.00E-01	0.00E-01
I 131	3.85E+01	6.02E+00	6.73E+01	6.77E+01	1.11E+02	2.24E+04	0.00E-01	0.00E-01
I 132	2.02E-03	5.18E-03	2.40E-03	4.40E-03	6.73E-03	2.04E-01	0.00E-01	0.00E-01
I 133	5.30E+00	5.64E+00	1.13E+01	1.40E+01	2.33E+01	2.60E+03	0.00E-01	0.00E-01
I 134	7.84E-09	1.13E-08	9.18E-09	1.70E-08	2.61E-08	3.92E-07	0.00E-01	0.00E-01
I 135	5.04E-01	8.13E-01	5.93E-01	1.07E+00	1.64E+00	9.45E+01	0.00E-01	0.00E-01
CS134	6.90E+04	1.76E+03	1.99E+05	3.27E+05	1.01E+05	0.00E-01	3.64E+04	0.00E-01
CS136	3.38E+04	1.84E+03	1.90E+04	5.23E+04	2.78E+04	0.00E-01	4.15E+03	0.00E-01
CS137	3.94E+04	1.67E+03	2.79E+05	2.67E+05	8.70E+04	0.00E-01	3.13E+04	0.00E-01
CS138	0.00E-01	0.00E-01	0.00E-01	0.00E-01	0.00E-01	0.00E-01	0.00E-01	0.00E-01
BA139	1.09E-05	2.16E-02	3.75E-04	2.00E-07	1.75E-07	0.00E-01	1.18E-07	0.00E-01
BA140	7.84E+02	6.80E+03	1.34E+04	1.18E+01	3.83E+00	0.00E-01	7.01E+00	0.00E-01
BA141	0.00E-01	0.00E-01	0.00E-01	0.00E-01	0.00E-01	0.00E-01	0.00E-01	0.00E-01
BA142	0.00E-01	0.00E-01	0.00E-01	0.00E-01	0.00E-01	0.00E-01	0.00E-01	0.00E-01
LA140	6.70E-01	5.54E+04	5.69E+00	1.99E+00	0.00E-01	0.00E-01	0.00E-01	0.00E-01
LA142	8.70E-07	5.51E-01	8.72E-06	2.78E-06	0.00E-01	0.00E-01	0.00E-01	0.00E-01
CE141	2.45E+00	2.06E+04	3.32E+01	1.65E+01	7.25E+00	0.00E-01	0.00E-01	0.00E-01
CE143	2.83E-01	2.86E+04	3.60E+00	1.95E+03	8.19E-01	0.00E-01	0.00E-01	0.00E-01
CE144	9.45E+01	1.45E+05	1.77E+03	5.55E+02	3.07E+02	0.00E-01	0.00E-01	0.00E-01
PR143	1.58E+00	3.44E+04	3.19E+01	9.56E+00	5.18E+00	0.00E-01	0.00E-01	0.00E-01
PR144	0.00E-01	0.00E-01	0.00E-01	0.00E-01	0.00E-01	0.00E-01	0.00E-01	0.00E-01
ND147	1.40E+00	2.87E+04	2.24E+01	1.81E+01	9.94E+00	0.00E-01	0.00E-01	0.00E-01
W 187	4.84E-01	1.51E+02	1.82E+00	1.08E+00	0.00E-01	0.00E-01	0.00E-01	0.00E-01
NP239	6.73E-02	7.09E+03	1.33E+00	9.58E-02	2.77E-01	0.00E-01	0.00E-01	0.00E-01

DOSE TRANSFER FACTORS FOR RADIONUCLIDES IN EFFLUENT WATER

AGE = CHILD
PATHWAY = IRRIGATED FRESH LEAFY VEGETABLES

	TOTAL BODY	GI-LLI	BONE	LIVER	KIDNEY	THYROID	LUNG	SKIN
				(mrem gal)/(Ci min)				
H 3	1.51E+00	1.51E+00	0.00E-01	1.51E+00	1.51E+00	1.51E+00	1.51E+00	0.00E-01
C 14	3.51E+03	3.51E+03	1.75E+04	3.51E+03	3.51E+03	3.51E+03	3.51E+03	0.00E-01
NA 24	8.63E+00	8.63E+00	8.63E+00	8.63E+00	8.63E+00	8.63E+00	8.63E+00	0.00E-01
P 32	1.70E+03	1.22E+03	4.42E+04	2.07E+03	0.00E-01	0.00E-01	0.00E-01	0.00E-01
CR 51	6.25E-01	3.32E+01	0.00E-01	0.00E-01	9.48E-02	3.47E-01	6.33E-01	0.00E-01
MN 54	2.87E+02	9.05E+02	0.00E-01	1.08E+03	3.02E+02	0.00E-01	0.00E-01	0.00E-01
MN 56	7.35E-05	4.72E-02	0.00E-01	3.26E-04	3.94E-04	0.00E-01	0.00E-01	0.00E-01
FE 55	1.94E+02	1.16E+02	1.18E+03	6.28E+02	0.00E-01	0.00E-01	3.55E+02	0.00E-01
FE 59	1.07E+03	2.24E+03	1.33E+03	2.15E+03	0.00E-01	0.00E-01	6.24E+02	0.00E-01
CO 58	4.86E+02	9.27E+02	0.00E-01	1.59E+02	0.00E-01	0.00E-01	0.00E-01	0.00E-01
CO 60	1.63E+03	3.06E+03	0.00E-01	5.53E+02	0.00E-01	0.00E-01	0.00E-01	0.00E-01
NI 63	1.99E+03	2.11E+02	5.84E+04	3.13E+03	0.00E-01	0.00E-01	0.00E-01	0.00E-01
NI 65	1.03E-04	2.16E-02	1.87E-03	1.76E-04	0.00E-01	0.00E-01	0.00E-01	0.00E-01
CU 64	1.50E-01	1.17E+01	0.00E-01	2.49E-01	6.02E-01	0.00E-01	0.00E-01	0.00E-01
ZN 65	2.39E+03	6.75E+02	1.44E+03	3.84E+03	2.42E+03	0.00E-01	0.00E-01	0.00E-01
ZN 69	2.11E-11	1.44E-08	1.58E-10	2.28E-10	1.38E-10	0.00E-01	0.00E-01	0.00E-01
BR 83	9.53E-05	0.00E-01	0.00E-01	0.00E-01	0.00E-01	0.00E-01	0.00E-01	0.00E-01
BR 84	2.23E-16	0.00E-01	0.00E-01	0.00E-01	0.00E-01	0.00E-01	0.00E-01	0.00E-01
BR 85	6.28E-37	0.00E-01	0.00E-01	0.00E-01	0.00E-01	0.00E-01	0.00E-01	0.00E-01
RB 86	2.48E+03	2.60E+02	0.00E-01	4.04E+03	0.00E-01	0.00E-01	0.00E-01	0.00E-01
RB 88	6.60E-28	4.66E-29	0.00E-01	9.50E-28	0.00E-01	0.00E-01	0.00E-01	0.00E-01
RB 89	4.96E-30	4.87E-32	0.00E-01	5.58E-30	0.00E-01	0.00E-01	0.00E-01	0.00E-01
SR 89	3.15E+03	4.27E+03	1.10E+05	0.00E-01	0.00E-01	0.00E-01	0.00E-01	0.00E-01
SR 90	7.47E+04	3.32E+04	3.71E+06	0.00E-01	0.00E-01	0.00E-01	0.00E-01	0.00E-01
SR 91	4.40E-01	2.57E+01	1.17E+01	0.00E-01	0.00E-01	0.00E-01	0.00E-01	0.00E-01
SR 92	5.35E-04	2.53E-01	1.33E-02	0.00E-01	0.00E-01	0.00E-01	0.00E-01	0.00E-01
Y 90	1.48E-02	1.57E+03	5.53E-01	0.00E-01	0.00E-01	0.00E-01	0.00E-01	0.00E-01
Y 91M	2.93E-15	1.57E-10	8.04E-14	0.00E-01	0.00E-01	0.00E-01	0.00E-01	0.00E-01
Y 91	1.37E+00	6.84E+03	5.14E+01	0.00E-01	0.00E-01	0.00E-01	0.00E-01	0.00E-01
Y 92	9.01E-07	9.09E-01	3.15E-05	0.00E-01	0.00E-01	0.00E-01	0.00E-01	0.00E-01
Y 93	1.79E-04	9.75E+01	6.54E-03	0.00E-01	0.00E-01	0.00E-01	0.00E-01	0.00E-01
ZR 95	1.97E+00	2.31E+03	1.01E+01	2.21E+00	3.17E+00	0.00E-01	0.00E-01	0.00E-01
ZR 97	1.12E-03	2.88E+02	1.32E-02	1.90E-03	2.73E-03	0.00E-01	0.00E-01	0.00E-01
NB 95	4.74E-01	1.23E+03	1.71E+00	6.64E-01	6.24E-01	0.00E-01	0.00E-01	0.00E-01
MO 99	4.56E+01	1.52E+02	0.00E-01	1.84E+02	3.94E+02	0.00E-01	0.00E-01	0.00E-01
TC 99M	3.26E-03	1.12E-01	1.00E-04	1.97E-04	2.86E-03	0.00E-01	9.99E-05	0.00E-01
TC101	5.14E-31	1.29E-31	3.87E-32	4.05E-32	6.91E-31	0.00E-01	2.14E-32	0.00E-01

DOSE TRANSFER FACTORS FOR RADIONUCLIDES IN EFFLUENT WATER

AGE = CHILD
PATHWAY = IRRIGATED FRESH LEAFY VEGETABLES

	TOTAL BODY	GI-LLI	BONE	LIVER	KIDNEY	THYROID	LUNG	SKIN
				(mrem gal)/(Ci min)				
RU103	2.20E+01	1.48E+03	5.72E+01	0.00E-01	1.44E+02	0.00E-01	0.00E-01	0.00E-01
RU105	6.74E-04	1.21E+00	1.86E-03	0.00E-01	1.63E-02	0.00E-01	0.00E-01	0.00E-01
RU106	1.49E+02	1.85E+04	1.19E+03	0.00E-01	1.61E+03	0.00E-01	0.00E-01	0.00E-01
AG110M	2.96E+01	4.40E+03	5.48E+01	3.70E+01	6.89E+01	0.00E-01	0.00E-01	0.00E-01
TE125M	1.37E+02	9.90E+02	1.03E+03	2.78E+02	0.00E-01	2.88E+02	0.00E-01	0.00E-01
TE127M	3.51E+02	2.39E+03	2.96E+03	7.96E+02	8.43E+03	7.07E+02	0.00E-01	0.00E-01
TE127	4.75E-02	8.66E+00	2.22E-01	5.97E-02	6.31E-01	1.53E-01	0.00E-01	0.00E-01
TE129M	5.86E+02	4.60E+03	3.77E+03	1.05E+03	1.11E+04	1.22E+03	0.00E-01	0.00E-01
TE129	3.94E-09	1.03E-06	1.66E-08	4.64E-09	4.86E-08	1.19E-08	0.00E-01	0.00E-01
TE131M	1.35E+01	5.16E+02	3.68E+01	1.27E+01	1.23E+02	2.61E+01	0.00E-01	0.00E-01
TE131	3.26E-21	5.75E-20	1.09E-20	3.34E-21	3.31E-20	8.38E-21	0.00E-01	0.00E-01
TE132	9.10E+01	7.58E+02	1.70E+02	7.53E+01	6.99E+02	1.10E+02	0.00E-01	0.00E-01
I 130	2.90E+00	2.64E+00	2.79E+00	5.64E+00	8.43E+00	6.21E+02	0.00E-01	0.00E-01
I 131	3.60E+02	5.64E+01	6.30E+02	6.33E+02	1.04E+03	2.09E+05	0.00E-01	0.00E-01
I 132	2.70E-04	6.91E-04	3.20E-04	5.87E-04	8.99E-04	2.72E-02	0.00E-01	0.00E-01
I 133	7.72E+00	8.22E+00	1.65E+01	2.04E+01	3.40E+01	3.79E+03	0.00E-01	0.00E-01
I 134	2.57E-10	3.71E-10	3.01E-10	5.59E-10	8.55E-10	1.29E-08	0.00E-01	0.00E-01
I 135	2.27E-01	3.66E-01	2.67E-01	4.81E-01	7.37E-01	4.26E+01	0.00E-01	0.00E-01
CS134	8.34E+03	2.13E+02	2.41E+04	3.95E+04	1.22E+04	0.00E-01	4.40E+03	0.00E-01
CS136	2.10E+03	1.14E+02	1.18E+03	3.24E+03	1.72E+03	0.00E-01	2.57E+02	0.00E-01
CS137	4.90E+03	2.08E+02	3.47E+04	3.32E+04	1.08E+04	0.00E-01	3.89E+03	0.00E-01
CS138	3.58E-16	2.60E-16	4.07E-16	5.65E-16	3.98E-16	0.00E-01	4.28E-17	0.00E-01
BA139	1.81E-08	3.61E-05	6.25E-07	3.34E-10	2.91E-10	0.00E-01	1.96E-10	0.00E-01
BA140	2.40E+02	2.08E+03	4.11E+03	3.60E+00	1.17E+00	0.00E-01	2.15E+00	0.00E-01
BA141	1.28E-28	2.25E-27	3.95E-27	2.21E-30	1.91E-30	0.00E-01	1.30E-29	0.00E-01
BA142	5.10E-32	1.19E-32	9.13E-31	6.57E-34	5.32E-34	0.00E-01	3.87E-34	0.00E-01
LA140	9.10E-03	7.52E+02	7.72E-02	2.70E-02	0.00E-01	0.00E-01	0.00E-01	0.00E-01
LA142	3.41E-10	2.16E-04	3.42E-09	1.09E-09	0.00E-01	0.00E-01	0.00E-01	0.00E-01
CE141	2.18E-01	1.83E+03	2.94E+00	1.47E+00	6.42E-01	0.00E-01	0.00E-01	0.00E-01
CE143	3.21E-03	3.24E+02	4.08E-02	2.21E+01	9.29E-03	0.00E-01	0.00E-01	0.00E-01
CE144	1.11E+01	1.70E+04	2.08E+02	6.51E+01	3.60E+01	0.00E-01	0.00E-01	0.00E-01
PR143	9.98E-02	2.17E+03	2.01E+00	6.04E-01	3.27E-01	0.00E-01	0.00E-01	0.00E-01
PR144	4.33E-33	5.73E-29	8.60E-32	2.66E-32	1.41E-32	0.00E-01	0.00E-01	0.00E-01
ND147	7.95E-02	1.63E+03	1.27E+00	1.03E+00	5.63E-01	0.00E-01	0.00E-01	0.00E-01
W 187	4.03E-01	1.26E+02	1.52E+00	8.98E-01	0.00E-01	0.00E-01	0.00E-01	0.00E-01
NP239	3.09E-03	3.25E+02	6.12E-02	4.40E-03	1.27E-02	0.00E-01	0.00E-01	0.00E-01

DOSE TRANSFER FACTORS FOR RADIONUCLIDES IN EFFLUENT WATER

AGE = CHILD
PATHWAY = IRRIGATED STORED FRUIT, VEGETABLES, GRAIN

	TOTAL BODY	GI-LLI	BONE	LIVER	KIDNEY	THYROID	LUNG	SKIN
				(mrem gal)/(Ci min)				
H 3	3.00E+01	3.00E+01	0.00E-01	3.00E+01	3.00E+01	3.00E+01	3.00E+01	0.00E-01
C 14	7.01E+04	7.01E+04	3.51E+05	7.01E+04	7.01E+04	7.01E+04	7.01E+04	0.00E-01
NA 24	4.57E-24	4.57E-24	4.57E-24	4.57E-24	4.57E-24	4.57E-24	4.57E-24	0.00E-01
P 32	1.95E+03	1.40E+03	5.06E+04	2.37E+03	0.00E-01	0.00E-01	0.00E-01	0.00E-01
CR 51	2.85E+00	1.51E+02	0.00E-01	0.00E-01	4.32E-01	1.58E+00	2.89E+00	0.00E-01
MN 54	5.04E+03	1.59E+04	0.00E-01	1.89E+04	5.30E+03	0.00E-01	0.00E-01	0.00E-01
MN 56	8.39E-27	5.39E-24	0.00E-01	3.72E-26	4.50E-26	0.00E-01	0.00E-01	0.00E-01
FE 55	3.73E+03	2.23E+03	2.27E+04	1.20E+04	0.00E-01	0.00E-01	6.81E+03	0.00E-01
FE 59	8.56E+03	1.79E+04	1.06E+04	1.72E+04	0.00E-01	0.00E-01	4.98E+03	0.00E-01
CO 58	5.47E+03	1.04E+04	0.00E-01	1.79E+03	0.00E-01	0.00E-01	0.00E-01	0.00E-01
CO 60	3.19E+04	5.99E+04	0.00E-01	1.08E+04	0.00E-01	0.00E-01	0.00E-01	0.00E-01
NI 63	3.97E+04	4.21E+03	1.17E+06	6.25E+04	0.00E-01	0.00E-01	0.00E-01	0.00E-01
NI 65	1.33E-26	2.78E-24	2.41E-25	2.27E-26	0.00E-01	0.00E-01	0.00E-01	0.00E-01
CU 64	9.80E-26	7.61E-24	0.00E-01	1.62E-25	3.92E-25	0.00E-01	0.00E-01	0.00E-01
ZN 65	4.04E+04	1.14E+04	2.44E+04	6.50E+04	4.10E+04	0.00E-01	0.00E-01	0.00E-01
ZN 69	1.53E-28	1.04E-25	1.15E-27	1.65E-27	1.00E-27	0.00E-01	0.00E-01	0.00E-01
BR 83	1.75E-26	0.00E-01	0.00E-01	0.00E-01	0.00E-01	0.00E-01	0.00E-01	0.00E-01
BR 84	1.63E-27	0.00E-01	0.00E-01	0.00E-01	0.00E-01	0.00E-01	0.00E-01	0.00E-01
BR 85	1.26E-35	0.00E-01	0.00E-01	0.00E-01	0.00E-01	0.00E-01	0.00E-01	0.00E-01
RB 86	5.57E+03	5.83E+02	0.00E-01	9.06E+03	0.00E-01	0.00E-01	0.00E-01	0.00E-01
RB 88	2.19E-28	1.55E-29	0.00E-01	3.15E-28	0.00E-01	0.00E-01	0.00E-01	0.00E-01
RB 89	9.92E-29	9.73E-31	0.00E-01	1.12E-28	0.00E-01	0.00E-01	0.00E-01	0.00E-01
SR 89	2.80E+04	3.79E+04	9.80E+05	0.00E-01	0.00E-01	0.00E-01	0.00E-01	0.00E-01
SR 90	1.49E+06	6.62E+05	7.40E+07	0.00E-01	0.00E-01	0.00E-01	0.00E-01	0.00E-01
SR 91	4.45E-25	2.60E-23	1.18E-23	0.00E-01	0.00E-01	0.00E-01	0.00E-01	0.00E-01
SR 92	4.32E-26	2.04E-23	1.08E-24	0.00E-01	0.00E-01	0.00E-01	0.00E-01	0.00E-01
Y 90	6.75E-08	7.18E-03	2.52E-06	0.00E-01	0.00E-01	0.00E-01	0.00E-01	0.00E-01
Y 91M	2.83E-31	1.53E-26	7.79E-30	0.00E-01	0.00E-01	0.00E-01	0.00E-01	0.00E-01
Y 91	1.37E+01	6.81E+04	5.11E+02	0.00E-01	0.00E-01	0.00E-01	0.00E-01	0.00E-01
Y 92	1.71E-29	1.72E-23	5.96E-28	0.00E-01	0.00E-01	0.00E-01	0.00E-01	0.00E-01
Y 93	1.64E-28	8.89E-23	5.96E-27	0.00E-01	0.00E-01	0.00E-01	0.00E-01	0.00E-01
ZR 95	2.08E+01	2.44E+04	1.06E+02	2.34E+01	3.35E+01	0.00E-01	0.00E-01	0.00E-01
ZR 97	1.30E-27	3.33E-22	1.52E-26	2.20E-27	3.16E-27	0.00E-01	0.00E-01	0.00E-01
NB 95	2.97E+00	7.68E+03	1.07E+01	4.15E+00	3.90E+00	0.00E-01	0.00E-01	0.00E-01
MO 99	3.13E-04	1.05E-03	0.00E-01	1.27E-03	2.70E-03	0.00E-01	0.00E-01	0.00E-01
TC 99M	9.06E-27	3.11E-25	2.79E-28	5.47E-28	7.95E-27	0.00E-01	2.78E-28	0.00E-01
TC101	1.03E-29	2.58E-30	7.74E-31	8.10E-31	1.38E-29	0.00E-01	4.28E-31	0.00E-01

DOSE TRANSFER FACTORS FOR RADIONUCLIDES IN EFFLUENT WATER

AGE = CHILD
PATHWAY = IRRIGATED STORED FRUIT, VEGETABLES, GRAIN

	TOTAL BODY	GI-LLI	BONE	LIVER	KIDNEY	THYROID	LUNG	SKIN
				(mrem gal)/(Ci min)				
RU103	1.55E+02	1.04E+04	4.04E+02	0.00E-01	1.02E+03	0.00E-01	0.00E-01	0.00E-01
RU105	5.02E-27	9.03E-24	1.38E-26	0.00E-01	1.22E-25	0.00E-01	0.00E-01	0.00E-01
RU106	2.66E+03	3.32E+05	2.13E+04	0.00E-01	2.88E+04	0.00E-01	0.00E-01	0.00E-01
AG110M	5.02E+02	7.48E+04	9.31E+02	6.28E+02	1.17E+03	0.00E-01	0.00E-01	0.00E-01
TE125M	1.35E+03	9.80E+03	1.02E+04	2.75E+03	0.00E-01	2.85E+03	0.00E-01	0.00E-01
TE127M	4.82E+03	3.29E+04	4.07E+04	1.09E+04	1.16E+05	9.72E+03	0.00E-01	0.00E-01
TE127	4.93E-26	8.99E-24	2.30E-25	6.20E-26	6.55E-25	1.59E-25	0.00E-01	0.00E-01
TE129M	3.46E+03	2.72E+04	2.23E+04	6.23E+03	6.55E+04	7.19E+03	0.00E-01	0.00E-01
TE129	1.17E-27	3.07E-25	4.93E-27	1.38E-27	1.44E-26	3.52E-27	0.00E-01	0.00E-01
TE131M	1.66E-12	6.32E-11	4.50E-12	1.56E-12	1.51E-11	3.20E-12	0.00E-01	0.00E-01
TE131	1.13E-28	2.00E-27	3.81E-28	1.16E-28	1.15E-27	2.91E-28	0.00E-01	0.00E-01
TE132	6.51E-03	5.43E-02	1.22E-02	5.39E-03	5.01E-02	7.85E-03	0.00E-01	0.00E-01
I 130	1.96E-24	1.78E-24	1.88E-24	3.80E-24	5.68E-24	4.19E-22	0.00E-01	0.00E-01
I 131	4.44E+01	6.96E+00	7.77E+01	7.82E+01	1.28E+02	2.59E+04	0.00E-01	0.00E-01
I 132	6.54E-26	1.67E-25	7.74E-26	1.42E-25	2.18E-25	6.60E-24	0.00E-01	0.00E-01
I 133	5.13E-19	5.47E-19	1.10E-18	1.36E-18	2.26E-18	2.52E-16	0.00E-01	0.00E-01
I 134	8.10E-27	1.17E-26	9.48E-27	1.76E-26	2.69E-26	4.05E-25	0.00E-01	0.00E-01
I 135	4.96E-25	8.00E-25	5.83E-25	1.05E-24	1.61E-24	9.30E-23	0.00E-01	0.00E-01
CS134	1.58E+05	4.04E+03	4.56E+05	7.49E+05	2.32E+05	0.00E-01	8.33E+04	0.00E-01
CS136	1.85E+03	1.01E+02	1.04E+03	2.86E+03	1.52E+03	0.00E-01	2.27E+02	0.00E-01
CS137	9.77E+04	4.14E+03	6.92E+05	6.62E+05	2.16E+05	0.00E-01	7.76E+04	0.00E-01
CS138	1.70E-27	1.24E-27	1.93E-27	2.68E-27	1.89E-27	0.00E-01	2.03E-28	0.00E-01
BA139	5.68E-28	1.13E-24	1.96E-26	1.05E-29	9.14E-30	0.00E-01	6.16E-30	0.00E-01
BA140	1.96E+02	1.70E+03	3.36E+03	2.95E+00	9.59E-01	0.00E-01	1.76E+00	0.00E-01
BA141	1.17E-29	2.04E-28	3.58E-28	2.01E-31	1.74E-31	0.00E-01	1.18E-30	0.00E-01
BA142	1.02E-30	2.38E-31	1.83E-29	1.31E-32	1.06E-32	0.00E-01	7.73E-33	0.00E-01
LA140	4.76E-12	3.94E-07	4.04E-11	1.41E-11	0.00E-01	0.00E-01	0.00E-01	0.00E-01
LA142	2.93E-30	1.85E-24	2.93E-29	9.34E-30	0.00E-01	0.00E-01	0.00E-01	0.00E-01
CE141	1.24E+00	1.04E+04	1.67E+01	8.32E+00	3.65E+00	0.00E-01	0.00E-01	0.00E-01
CE143	8.80E-15	8.90E-10	1.12E-13	6.08E-11	2.55E-14	0.00E-01	0.00E-01	0.00E-01
CE144	1.92E+02	2.94E+05	3.60E+03	1.13E+03	6.24E+02	0.00E-01	0.00E-01	0.00E-01
PR143	9.86E-02	2.14E+03	1.99E+00	5.97E-01	3.23E-01	0.00E-01	0.00E-01	0.00E-01
PR144	9.61E-33	1.27E-28	1.91E-31	5.91E-32	3.12E-32	0.00E-01	0.00E-01	0.00E-01
ND147	3.99E-02	8.16E+02	6.36E-01	5.15E-01	2.83E-01	0.00E-01	0.00E-01	0.00E-01
W 187	1.22E-17	3.81E-15	4.58E-17	2.71E-17	0.00E-01	0.00E-01	0.00E-01	0.00E-01
NP239	1.84E-09	1.93E-04	3.64E-08	2.61E-09	7.55E-09	0.00E-01	0.00E-01	0.00E-01

DOSE TRANSFER FACTORS FOR RADIONUCLIDES IN EFFLUENT WATER

AGE = CHILD
PATHWAY = IRRIGATED FRESH FORAGE--MILK

	TOTAL BODY	GI-LLI	BONE	LIVER	KIDNEY	THYROID	LUNG	SKIN
				(mrem gal)/(Ci min)				
H 3	8.73E+00	8.73E+00	0.00E-01	8.73E+00	8.73E+00	8.73E+00	8.73E+00	0.00E-01
C 14	2.93E+04	2.93E+04	1.46E+05	2.93E+04	2.93E+04	2.93E+04	2.93E+04	0.00E-01
NA 24	2.07E+02	2.07E+02	2.07E+02	2.07E+02	2.07E+02	2.07E+02	2.07E+02	0.00E-01
P 32	6.91E+04	4.95E+04	1.79E+06	8.38E+04	0.00E-01	0.00E-01	0.00E-01	0.00E-01
CR 51	2.20E+00	1.16E+02	0.00E-01	0.00E-01	3.33E-01	1.22E+00	2.23E+00	0.00E-01
MN 54	1.07E+02	3.36E+02	0.00E-01	4.01E+02	1.12E+02	0.00E-01	0.00E-01	0.00E-01
MN 56	5.11E-08	3.28E-05	0.00E-01	2.26E-07	2.74E-07	0.00E-01	0.00E-01	0.00E-01
FE 55	3.46E+02	2.07E+02	2.11E+03	1.12E+03	0.00E-01	0.00E-01	6.32E+02	0.00E-01
FE 59	2.01E+03	4.20E+03	2.49E+03	4.03E+03	0.00E-01	0.00E-01	1.17E+03	0.00E-01
CO 58	7.47E+02	1.42E+03	0.00E-01	2.44E+02	0.00E-01	0.00E-01	0.00E-01	0.00E-01
CO 60	2.40E+03	4.51E+03	0.00E-01	8.14E+02	0.00E-01	0.00E-01	0.00E-01	0.00E-01
NI 63	1.92E+04	2.04E+03	5.65E+05	3.02E+04	0.00E-01	0.00E-01	0.00E-01	0.00E-01
NI 65	1.70E-06	3.57E-04	3.09E-05	2.91E-06	0.00E-01	0.00E-01	0.00E-01	0.00E-01
CU 64	1.03E+00	7.98E+01	0.00E-01	1.70E+00	4.11E+00	0.00E-01	0.00E-01	0.00E-01
ZN 65	1.35E+05	3.81E+04	8.13E+04	2.17E+05	1.37E+05	0.00E-01	0.00E-01	0.00E-01
ZN 69	3.59E-17	2.45E-14	2.69E-16	3.89E-16	2.36E-16	0.00E-01	0.00E-01	0.00E-01
BR 83	8.21E-06	0.00E-01	0.00E-01	0.00E-01	0.00E-01	0.00E-01	0.00E-01	0.00E-01
BR 84	7.38E-27	0.00E-01	0.00E-01	0.00E-01	0.00E-01	0.00E-01	0.00E-01	0.00E-01
BR 85	5.67E-35	0.00E-01	0.00E-01	0.00E-01	0.00E-01	0.00E-01	0.00E-01	0.00E-01
RB 86	1.21E+05	1.26E+04	0.00E-01	1.97E+05	0.00E-01	0.00E-01	0.00E-01	0.00E-01
RB 88	5.95E-28	4.20E-29	0.00E-01	8.57E-28	0.00E-01	0.00E-01	0.00E-01	0.00E-01
RB 89	2.70E-28	2.64E-30	0.00E-01	3.03E-28	0.00E-01	0.00E-01	0.00E-01	0.00E-01
SR 89	3.95E+03	5.35E+03	1.38E+05	0.00E-01	0.00E-01	0.00E-01	0.00E-01	0.00E-01
SR 90	1.17E+05	5.20E+04	5.82E+06	0.00E-01	0.00E-01	0.00E-01	0.00E-01	0.00E-01
SR 91	1.11E-01	6.47E+00	2.93E+00	0.00E-01	0.00E-01	0.00E-01	0.00E-01	0.00E-01
SR 92	1.68E-06	7.95E-04	4.20E-05	0.00E-01	0.00E-01	0.00E-01	0.00E-01	0.00E-01
Y 90	2.07E-04	2.20E+01	7.73E-03	0.00E-01	0.00E-01	0.00E-01	0.00E-01	0.00E-01
Y 91M	9.59E-26	5.16E-21	2.63E-24	0.00E-01	0.00E-01	0.00E-01	0.00E-01	0.00E-01
Y 91	2.13E-02	1.06E+02	7.94E-01	0.00E-01	0.00E-01	0.00E-01	0.00E-01	0.00E-01
Y 92	1.51E-10	1.53E-04	5.28E-09	0.00E-01	0.00E-01	0.00E-01	0.00E-01	0.00E-01
Y 93	6.25E-07	3.39E-01	2.28E-05	0.00E-01	0.00E-01	0.00E-01	0.00E-01	0.00E-01
ZR 95	1.52E-02	1.78E+01	7.76E-02	1.70E-02	2.44E-02	0.00E-01	0.00E-01	0.00E-01
ZR 97	3.80E-06	9.76E-01	4.46E-05	6.44E-06	9.25E-06	0.00E-01	0.00E-01	0.00E-01
NB 95	1.87E+00	4.85E+03	6.73E+00	2.62E+00	2.46E+00	0.00E-01	0.00E-01	0.00E-01
MO 99	4.82E+02	1.61E+03	0.00E-01	1.95E+03	4.16E+03	0.00E-01	0.00E-01	0.00E-01
TC 99M	9.29E-03	3.19E-01	2.86E-04	5.61E-04	8.15E-03	0.00E-01	2.85E-04	0.00E-01
TC101	2.32E-29	5.83E-30	1.75E-30	1.83E-30	3.13E-29	0.00E-01	9.69E-31	0.00E-01

DOSE TRANSFER FACTORS FOR RADIONUCLIDES IN EFFLUENT WATER

AGE = CHILD
PATHWAY = IRRIGATED FRESH FORAGE--MILK

	TOTAL BODY	GI-LLI	BONE	LIVER	KIDNEY	THYROID	LUNG	SKIN
				(mrem gal)/(Ci min)				
RU103	3.45E-02	2.32E+00	8.98E-02	0.00E-01	2.26E-01	0.00E-01	0.00E-01	0.00E-01
RU105	2.87E-08	5.17E-05	7.92E-08	0.00E-01	6.96E-07	0.00E-01	0.00E-01	0.00E-01
RU106	2.20E-01	2.75E+01	1.77E+00	0.00E-01	2.38E+00	0.00E-01	0.00E-01	0.00E-01
AG110M	2.18E+03	3.25E+05	4.04E+03	2.73E+03	5.08E+03	0.00E-01	0.00E-01	0.00E-01
TE125M	2.05E+02	1.48E+03	1.54E+03	4.17E+02	0.00E-01	4.31E+02	0.00E-01	0.00E-01
TE127M	5.05E+02	3.45E+03	4.26E+03	1.15E+03	1.21E+04	1.02E+03	0.00E-01	0.00E-01
TE127	1.44E-02	2.63E+00	6.73E-02	1.81E-02	1.91E-01	4.66E-02	0.00E-01	0.00E-01
TE129M	9.07E+02	7.13E+03	5.84E+03	1.63E+03	1.72E+04	1.88E+03	0.00E-01	0.00E-01
TE129	4.19E-15	1.10E-12	1.77E-14	4.93E-15	5.17E-14	1.26E-14	0.00E-01	0.00E-01
TE131M	1.40E+01	5.33E+02	3.80E+01	1.31E+01	1.27E+02	2.70E+01	0.00E-01	0.00E-01
TE131	1.02E-29	1.80E-28	3.43E-29	1.05E-29	1.04E-28	2.62E-29	0.00E-01	0.00E-01
TE132	1.32E+02	1.10E+03	2.47E+02	1.09E+02	1.02E+03	1.59E+02	0.00E-01	0.00E-01
I 130	8.21E+00	7.45E+00	7.89E+00	1.59E+01	2.38E+01	1.76E+03	0.00E-01	0.00E-01
I 131	3.53E+03	5.53E+02	6.18E+03	6.21E+03	1.02E+04	2.05E+06	0.00E-01	0.00E-01
I 132	2.13E-06	5.44E-06	2.52E-06	4.62E-06	7.07E-06	2.14E-04	0.00E-01	0.00E-01
I 133	3.78E+01	4.02E+01	8.07E+01	9.98E+01	1.66E+02	1.85E+04	0.00E-01	0.00E-01
I 134	1.55E-17	2.24E-17	1.82E-17	3.38E-17	5.17E-17	7.77E-16	0.00E-01	0.00E-01
I 135	1.99E-01	3.20E-01	2.33E-01	4.20E-01	6.43E-01	3.72E+01	0.00E-01	0.00E-01
CS134	1.48E+05	3.79E+03	4.28E+05	7.02E+05	2.18E+05	0.00E-01	7.81E+04	0.00E-01
CS136	4.13E+04	2.24E+03	2.32E+04	6.39E+04	3.40E+04	0.00E-01	5.07E+03	0.00E-01
CS137	8.60E+04	3.65E+03	6.09E+05	5.83E+05	1.90E+05	0.00E-01	6.83E+04	0.00E-01
CS138	1.85E-27	1.35E-27	2.10E-27	2.92E-27	2.05E-27	0.00E-01	2.21E-28	0.00E-01
BA139	7.33E-14	1.46E-10	2.53E-12	1.35E-15	1.18E-15	0.00E-01	7.94E-16	0.00E-01
BA140	1.58E+02	1.37E+03	2.70E+03	2.37E+00	7.71E-01	0.00E-01	1.41E+00	0.00E-01
BA141	4.23E-31	7.40E-30	1.30E-29	7.27E-33	6.29E-33	0.00E-01	4.27E-32	0.00E-01
BA142	3.70E-32	8.64E-33	6.62E-31	4.76E-34	3.86E-34	0.00E-01	2.80E-34	0.00E-01
LA140	5.46E-05	4.51E+00	4.63E-04	1.62E-04	0.00E-01	0.00E-01	0.00E-01	0.00E-01
LA142	6.30E-17	3.99E-11	6.32E-16	2.01E-16	0.00E-01	0.00E-01	0.00E-01	0.00E-01
CE141	3.45E-02	2.90E+02	4.66E-01	2.32E-01	1.02E-01	0.00E-01	0.00E-01	0.00E-01
CE143	3.52E-04	3.56E+01	4.48E-03	2.43E+00	1.02E-03	0.00E-01	0.00E-01	0.00E-01
CE144	1.65E+00	2.53E+03	3.10E+01	9.72E+00	5.38E+00	0.00E-01	0.00E-01	0.00E-01
PR143	8.20E-04	1.78E+01	1.65E-02	4.96E-03	2.69E-03	0.00E-01	0.00E-01	0.00E-01
PR144	4.35E-36	5.76E-32	8.66E-35	2.68E-35	1.42E-35	0.00E-01	0.00E-01	0.00E-01
ND147	6.54E-04	1.34E+01	1.04E-02	8.45E-03	4.64E-03	0.00E-01	0.00E-01	0.00E-01
W 187	1.82E-01	5.71E+01	6.86E-01	4.06E-01	0.00E-01	0.00E-01	0.00E-01	0.00E-01
NP239	2.09E-05	2.20E+00	4.14E-04	2.97E-05	8.59E-05	0.00E-01	0.00E-01	0.00E-01

DOSE TRANSFER FACTORS FOR RADIONUCLIDES IN EFFLUENT WATER

AGE = CHILD
PATHWAY = IRRIGATED FRESH FORAGE--MEAT

	TOTAL BODY	GI-LLI	BONE	LIVER	KIDNEY	THYROID	LUNG	SKIN
				(mrem gal)/(Ci min)				
H 3	1.19E+00	1.19E+00	0.00E-01	1.19E+00	1.19E+00	1.19E+00	1.19E+00	0.00E-01
C 14	9.39E+03	9.39E+03	4.70E+04	9.39E+03	9.39E+03	9.39E+03	9.39E+03	0.00E-01
NA 24	4.37E-08	4.37E-08	4.37E-08	4.37E-08	4.37E-08	4.37E-08	4.37E-08	0.00E-01
P 32	6.60E+03	4.73E+03	1.71E+05	8.01E+03	0.00E-01	0.00E-01	0.00E-01	0.00E-01
CR 51	1.90E-01	1.01E+01	0.00E-01	0.00E-01	2.88E-02	1.05E-01	1.92E-01	0.00E-01
MN 54	4.08E+01	1.28E+02	0.00E-01	1.53E+02	4.29E+01	0.00E-01	0.00E-01	0.00E-01
MN 56	7.56E-29	4.86E-26	0.00E-01	3.35E-28	4.05E-28	0.00E-01	0.00E-01	0.00E-01
FE 55	1.41E+03	8.46E+02	8.61E+03	4.57E+03	0.00E-01	0.00E-01	2.58E+03	0.00E-01
FE 59	6.29E+03	1.31E+04	7.80E+03	1.26E+04	0.00E-01	0.00E-01	3.66E+03	0.00E-01
CO 58	1.01E+03	1.93E+03	0.00E-01	3.30E+02	0.00E-01	0.00E-01	0.00E-01	0.00E-01
CO 60	3.85E+03	7.24E+03	0.00E-01	1.31E+03	0.00E-01	0.00E-01	0.00E-01	0.00E-01
NI 63	1.89E+04	2.00E+03	5.55E+05	2.97E+04	0.00E-01	0.00E-01	0.00E-01	0.00E-01
NI 65	7.92E-27	1.66E-24	1.44E-25	1.36E-26	0.00E-01	0.00E-01	0.00E-01	0.00E-01
CU 64	3.95E-12	3.07E-10	0.00E-01	6.53E-12	1.58E-11	0.00E-01	0.00E-01	0.00E-01
ZN 65	1.22E+04	3.46E+03	7.39E+03	1.97E+04	1.24E+04	0.00E-01	0.00E-01	0.00E-01
ZN 69	5.16E-29	3.52E-26	3.86E-28	5.58E-28	3.39E-28	0.00E-01	0.00E-01	0.00E-01
BR 83	5.11E-27	0.00E-01	0.00E-01	0.00E-01	0.00E-01	0.00E-01	0.00E-01	0.00E-01
BR 84	4.77E-28	0.00E-01	0.00E-01	0.00E-01	0.00E-01	0.00E-01	0.00E-01	0.00E-01
BR 85	3.66E-36	0.00E-01	0.00E-01	0.00E-01	0.00E-01	0.00E-01	0.00E-01	0.00E-01
RB 86	7.96E+03	8.33E+02	0.00E-01	1.29E+04	0.00E-01	0.00E-01	0.00E-01	0.00E-01
RB 88	7.64E-29	5.39E-30	0.00E-01	1.10E-28	0.00E-01	0.00E-01	0.00E-01	0.00E-01
RB 89	3.46E-29	3.40E-31	0.00E-01	3.90E-29	0.00E-01	0.00E-01	0.00E-01	0.00E-01
SR 89	2.87E+02	3.89E+02	1.00E+04	0.00E-01	0.00E-01	0.00E-01	0.00E-01	0.00E-01
SR 90	1.09E+04	4.84E+03	5.41E+05	0.00E-01	0.00E-01	0.00E-01	0.00E-01	0.00E-01
SR 91	2.01E-16	1.17E-14	5.31E-15	0.00E-01	0.00E-01	0.00E-01	0.00E-01	0.00E-01
SR 92	2.93E-28	1.38E-25	7.30E-27	0.00E-01	0.00E-01	0.00E-01	0.00E-01	0.00E-01
Y 90	1.11E-04	1.18E+01	4.16E-03	0.00E-01	0.00E-01	0.00E-01	0.00E-01	0.00E-01
Y 91M	1.47E-32	7.90E-28	4.04E-31	0.00E-01	0.00E-01	0.00E-01	0.00E-01	0.00E-01
Y 91	9.81E-01	4.89E+03	3.67E+01	0.00E-01	0.00E-01	0.00E-01	0.00E-01	0.00E-01
Y 92	8.83E-31	8.92E-25	3.09E-29	0.00E-01	0.00E-01	0.00E-01	0.00E-01	0.00E-01
Y 93	4.49E-18	2.44E-12	1.64E-16	0.00E-01	0.00E-01	0.00E-01	0.00E-01	0.00E-01
ZR 95	1.06E+01	1.24E+04	5.39E+01	1.19E+01	1.70E+01	0.00E-01	0.00E-01	0.00E-01
ZR 97	6.41E-11	1.65E-05	7.52E-10	1.09E-10	1.56E-10	0.00E-01	0.00E-01	0.00E-01
NB 95	1.83E+01	4.73E+04	6.57E+01	2.56E+01	2.40E+01	0.00E-01	0.00E-01	0.00E-01
MO 99	6.80E-01	2.28E+00	0.00E-01	2.75E+00	5.87E+00	0.00E-01	0.00E-01	0.00E-01
TC 99M	4.50E-24	1.54E-22	1.39E-25	2.72E-25	3.95E-24	0.00E-01	1.38E-25	0.00E-01
TC101	4.62E-29	1.16E-29	3.48E-30	3.65E-30	6.22E-29	0.00E-01	1.93E-30	0.00E-01

DOSE TRANSFER FACTORS FOR RADIONUCLIDES IN EFFLUENT WATER

AGE = CHILD
PATHWAY = IRRIGATED FRESH FORAGE--MEAT

	TOTAL BODY	GI-LLI	BONE	LIVER	KIDNEY	THYROID	LUNG	SKIN
				(mrem gal)/(Ci min)				
RU103	1.25E+03	8.40E+04	3.25E+03	0.00E-01	8.18E+03	0.00E-01	0.00E-01	0.00E-01
RU105	2.26E-26	4.07E-23	6.23E-26	0.00E-01	5.48E-25	0.00E-01	0.00E-01	0.00E-01
RU106	1.06E+04	1.32E+06	8.48E+04	0.00E-01	1.15E+05	0.00E-01	0.00E-01	0.00E-01
AG110M	8.77E+01	1.30E+04	1.62E+02	1.10E+02	2.04E+02	0.00E-01	0.00E-01	0.00E-01
TE125M	1.58E+03	1.14E+04	1.19E+04	3.22E+03	0.00E-01	3.33E+03	0.00E-01	0.00E-01
TE127M	4.31E+03	2.94E+04	3.63E+04	9.78E+03	1.04E+05	8.68E+03	0.00E-01	0.00E-01
TE127	1.68E-15	3.07E-13	7.86E-15	2.12E-15	2.23E-14	5.44E-15	0.00E-01	0.00E-01
TE129M	5.98E+03	4.70E+04	3.85E+04	1.08E+04	1.13E+05	1.24E+04	0.00E-01	0.00E-01
TE129	1.01E-27	2.64E-25	4.24E-27	1.19E-27	1.24E-26	3.03E-27	0.00E-01	0.00E-01
TE131M	6.17E-03	2.35E-01	1.68E-02	5.80E-03	5.61E-02	1.19E-02	0.00E-01	0.00E-01
TE131	9.76E-29	1.72E-27	3.28E-28	1.00E-28	9.92E-28	2.51E-28	0.00E-01	0.00E-01
TE132	2.76E+01	2.30E+02	5.16E+01	2.28E+01	2.12E+02	3.32E+01	0.00E-01	0.00E-01
I 130	1.43E-11	1.30E-11	1.38E-11	2.78E-11	4.16E-11	3.07E-09	0.00E-01	0.00E-01
I 131	4.49E+01	7.04E+00	7.86E+01	7.90E+01	1.30E+02	2.61E+04	0.00E-01	0.00E-01
I 132	2.14E-27	5.47E-27	2.53E-27	4.64E-27	7.11E-27	2.16E-25	0.00E-01	0.00E-01
I 133	1.28E-06	1.37E-06	2.74E-06	3.39E-06	5.65E-06	6.30E-04	0.00E-01	0.00E-01
I 134	2.65E-28	3.81E-28	3.10E-28	5.75E-28	8.80E-28	1.32E-26	0.00E-01	0.00E-01
I 135	2.26E-22	3.64E-22	2.66E-22	4.78E-22	7.33E-22	4.23E-20	0.00E-01	0.00E-01
CS134	6.03E+03	1.54E+02	1.74E+04	2.86E+04	8.87E+03	0.00E-01	3.18E+03	0.00E-01
CS136	6.61E+02	3.59E+01	3.72E+02	1.02E+03	5.44E+02	0.00E-01	8.11E+01	0.00E-01
CS137	3.56E+03	1.51E+02	2.52E+04	2.41E+04	7.86E+03	0.00E-01	2.83E+03	0.00E-01
CS138	7.67E-29	5.57E-29	8.70E-29	1.21E-28	8.51E-29	0.00E-01	9.16E-30	0.00E-01
BA139	2.05E-29	4.08E-26	7.07E-28	3.77E-31	3.29E-31	0.00E-01	2.22E-31	0.00E-01
BA140	5.91E+01	5.13E+02	1.01E+03	8.88E-01	2.89E-01	0.00E-01	5.29E-01	0.00E-01
BA141	4.20E-31	7.36E-30	1.29E-29	7.23E-33	6.25E-33	0.00E-01	4.25E-32	0.00E-01
BA142	3.68E-32	8.58E-33	6.58E-31	4.74E-34	3.83E-34	0.00E-01	2.79E-34	0.00E-01
LA140	1.60E-07	1.32E-02	1.36E-06	4.75E-07	0.00E-01	0.00E-01	0.00E-01	0.00E-01
LA142	6.59E-33	4.17E-27	6.60E-32	2.11E-32	0.00E-01	0.00E-01	0.00E-01	0.00E-01
CE141	3.50E-02	2.94E+02	4.73E-01	2.36E-01	1.03E-01	0.00E-01	0.00E-01	0.00E-01
CE143	6.25E-08	6.32E-03	7.96E-07	4.31E-04	1.81E-07	0.00E-01	0.00E-01	0.00E-01
CE144	2.36E+00	3.62E+03	4.43E+01	1.39E+01	7.68E+00	0.00E-01	0.00E-01	0.00E-01
PR143	3.82E-02	8.31E+02	7.71E-01	2.31E-01	1.25E-01	0.00E-01	0.00E-01	0.00E-01
PR144	5.09E-34	6.73E-30	1.01E-32	3.13E-33	1.65E-33	0.00E-01	0.00E-01	0.00E-01
ND147	1.74E-02	3.57E+02	2.78E-01	2.25E-01	1.23E-01	0.00E-01	0.00E-01	0.00E-01
W 187	2.15E-07	6.74E-05	8.10E-07	4.80E-07	0.00E-01	0.00E-01	0.00E-01	0.00E-01
NP239	5.25E-07	5.52E-02	1.04E-05	7.46E-07	2.16E-06	0.00E-01	0.00E-01	0.00E-01

DOSE TRANSFER FACTORS FOR RADIONUCLIDES IN EFFLUENT WATER

AGE = CHILD
PATHWAY = IRRIGATED STORED FEED--MILK

	TOTAL BODY	GI-LLI	BONE	LIVER	KIDNEY	THYROID	LUNG	SKIN
				(mrem gal)/(Ci min)				
H 3	8.73E+00	8.73E+00	0.00E-01	8.73E+00	8.73E+00	8.73E+00	8.73E+00	0.00E-01
C 14	3.03E+04	3.03E+04	1.51E+05	3.03E+04	3.03E+04	3.03E+04	3.03E+04	0.00E-01
NA 24	2.07E+02	2.07E+02	2.07E+02	2.07E+02	2.07E+02	2.07E+02	2.07E+02	0.00E-01
P 32	7.27E+04	5.21E+04	1.89E+06	8.83E+04	0.00E-01	0.00E-01	0.00E-01	0.00E-01
CR 51	2.43E+00	1.29E+02	0.00E-01	0.00E-01	3.69E-01	1.35E+00	2.46E+00	0.00E-01
MN 54	1.29E+02	4.08E+02	0.00E-01	4.86E+02	1.36E+02	0.00E-01	0.00E-01	0.00E-01
MN 56	5.11E-08	3.28E-05	0.00E-01	2.26E-07	2.74E-07	0.00E-01	0.00E-01	0.00E-01
FE 55	4.23E+02	2.53E+02	2.57E+03	1.36E+03	0.00E-01	0.00E-01	7.72E+02	0.00E-01
FE 59	2.29E+03	4.80E+03	2.85E+03	4.61E+03	0.00E-01	0.00E-01	1.34E+03	0.00E-01
CO 58	8.73E+02	1.66E+03	0.00E-01	2.85E+02	0.00E-01	0.00E-01	0.00E-01	0.00E-01
CO 60	2.94E+03	5.52E+03	0.00E-01	9.96E+02	0.00E-01	0.00E-01	0.00E-01	0.00E-01
NI 63	2.35E+04	2.49E+03	6.91E+05	3.70E+04	0.00E-01	0.00E-01	0.00E-01	0.00E-01
NI 65	1.70E-06	3.57E-04	3.09E-05	2.91E-06	0.00E-01	0.00E-01	0.00E-01	0.00E-01
CU 64	1.03E+00	7.98E+01	0.00E-01	1.70E+00	4.11E+00	0.00E-01	0.00E-01	0.00E-01
ZN 65	1.62E+05	4.58E+04	9.78E+04	2.61E+05	1.64E+05	0.00E-01	0.00E-01	0.00E-01
ZN 69	3.59E-17	2.45E-14	2.69E-16	3.89E-16	2.36E-16	0.00E-01	0.00E-01	0.00E-01
BR 83	8.21E-06	0.00E-01	0.00E-01	0.00E-01	0.00E-01	0.00E-01	0.00E-01	0.00E-01
BR 84	7.38E-27	0.00E-01	0.00E-01	0.00E-01	0.00E-01	0.00E-01	0.00E-01	0.00E-01
BR 85	5.67E-35	0.00E-01	0.00E-01	0.00E-01	0.00E-01	0.00E-01	0.00E-01	0.00E-01
RB 86	1.30E+05	1.36E+04	0.00E-01	2.11E+05	0.00E-01	0.00E-01	0.00E-01	0.00E-01
RB 88	5.95E-28	4.20E-29	0.00E-01	8.57E-28	0.00E-01	0.00E-01	0.00E-01	0.00E-01
RB 89	2.70E-28	2.64E-30	0.00E-01	3.03E-28	0.00E-01	0.00E-01	0.00E-01	0.00E-01
SR 89	4.53E+03	6.14E+03	1.59E+05	0.00E-01	0.00E-01	0.00E-01	0.00E-01	0.00E-01
SR 90	1.31E+05	5.84E+04	6.53E+06	0.00E-01	0.00E-01	0.00E-01	0.00E-01	0.00E-01
SR 91	1.11E-01	6.47E+00	2.93E+00	0.00E-01	0.00E-01	0.00E-01	0.00E-01	0.00E-01
SR 92	1.68E-06	7.95E-04	4.20E-05	0.00E-01	0.00E-01	0.00E-01	0.00E-01	0.00E-01
Y 90	2.07E-04	2.20E+01	7.73E-03	0.00E-01	0.00E-01	0.00E-01	0.00E-01	0.00E-01
Y 91M	9.59E-26	5.16E-21	2.63E-24	0.00E-01	0.00E-01	0.00E-01	0.00E-01	0.00E-01
Y 91	2.46E-02	1.23E+02	9.20E-01	0.00E-01	0.00E-01	0.00E-01	0.00E-01	0.00E-01
Y 92	1.51E-10	1.53E-04	5.28E-09	0.00E-01	0.00E-01	0.00E-01	0.00E-01	0.00E-01
Y 93	6.25E-07	3.39E-01	2.28E-05	0.00E-01	0.00E-01	0.00E-01	0.00E-01	0.00E-01
ZR 95	1.77E-02	2.07E+01	9.03E-02	1.98E-02	2.84E-02	0.00E-01	0.00E-01	0.00E-01
ZR 97	3.80E-06	9.76E-01	4.46E-05	6.44E-06	9.25E-06	0.00E-01	0.00E-01	0.00E-01
NB 95	2.11E+00	5.45E+03	7.58E+00	2.95E+00	2.77E+00	0.00E-01	0.00E-01	0.00E-01
MO 99	4.82E+02	1.61E+03	0.00E-01	1.95E+03	4.16E+03	0.00E-01	0.00E-01	0.00E-01
TC 99M	9.29E-03	3.19E-01	2.86E-04	5.61E-04	8.15E-03	0.00E-01	2.85E-04	0.00E-01
TC101	2.32E-29	5.83E-30	1.75E-30	1.83E-30	3.13E-29	0.00E-01	9.69E-31	0.00E-01

DOSE TRANSFER FACTORS FOR RADIONUCLIDES IN EFFLUENT WATER

AGE = CHILD
PATHWAY = IRRIGATED STORED FEED--MILK

	TOTAL BODY	GI-LLI	BONE	LIVER	KIDNEY	THYROID	LUNG	SKIN
				(mrem gal)/(Ci min)				
RU103	3.91E-02	2.63E+00	1.02E-01	0.00E-01	2.56E-01	0.00E-01	0.00E-01	0.00E-01
RU105	2.87E-08	5.17E-05	7.92E-08	0.00E-01	6.96E-07	0.00E-01	0.00E-01	0.00E-01
RU106	2.67E-01	3.33E+01	2.14E+00	0.00E-01	2.89E+00	0.00E-01	0.00E-01	0.00E-01
AG110M	2.63E+03	3.92E+05	4.87E+03	3.29E+03	6.13E+03	0.00E-01	0.00E-01	0.00E-01
TE125M	2.37E+02	1.71E+03	1.77E+03	4.81E+02	0.00E-01	4.98E+02	0.00E-01	0.00E-01
TE127M	5.96E+02	4.07E+03	5.02E+03	1.35E+03	1.43E+04	1.20E+03	0.00E-01	0.00E-01
TE127	1.44E-02	2.63E+00	6.73E-02	1.81E-02	1.91E-01	4.66E-02	0.00E-01	0.00E-01
TE129M	1.02E+03	7.98E+03	6.55E+03	1.83E+03	1.92E+04	2.11E+03	0.00E-01	0.00E-01
TE129	4.19E-15	1.10E-12	1.77E-14	4.93E-15	5.17E-14	1.26E-14	0.00E-01	0.00E-01
TE131M	1.40E+01	5.33E+02	3.80E+01	1.31E+01	1.27E+02	2.70E+01	0.00E-01	0.00E-01
TE131	1.02E-29	1.80E-28	3.43E-29	1.05E-29	1.04E-28	2.62E-29	0.00E-01	0.00E-01
TE132	1.32E+02	1.10E+03	2.47E+02	1.09E+02	1.02E+03	1.59E+02	0.00E-01	0.00E-01
I 130	8.21E+00	7.45E+00	7.89E+00	1.59E+01	2.38E+01	1.76E+03	0.00E-01	0.00E-01
I 131	3.59E+03	5.63E+02	6.28E+03	6.32E+03	1.04E+04	2.09E+06	0.00E-01	0.00E-01
I 132	2.13E-06	5.44E-06	2.52E-06	4.62E-06	7.07E-06	2.14E-04	0.00E-01	0.00E-01
I 133	3.78E+01	4.02E+01	8.07E+01	9.98E+01	1.66E+02	1.85E+04	0.00E-01	0.00E-01
I 134	1.55E-17	2.24E-17	1.82E-17	3.38E-17	5.17E-17	7.77E-16	0.00E-01	0.00E-01
I 135	1.99E-01	3.20E-01	2.33E-01	4.20E-01	6.43E-01	3.72E+01	0.00E-01	0.00E-01
CS134	1.81E+05	4.62E+03	5.22E+05	8.57E+05	2.65E+05	0.00E-01	9.53E+04	0.00E-01
CS136	4.33E+04	2.35E+03	2.43E+04	6.69E+04	3.56E+04	0.00E-01	5.31E+03	0.00E-01
CS137	1.05E+05	4.47E+03	7.45E+05	7.14E+05	2.33E+05	0.00E-01	8.37E+04	0.00E-01
CS138	1.85E-27	1.35E-27	2.10E-27	2.92E-27	2.05E-27	0.00E-01	2.21E-28	0.00E-01
BA139	7.33E-14	1.46E-10	2.53E-12	1.35E-15	1.18E-15	0.00E-01	7.94E-16	0.00E-01
BA140	1.65E+02	1.43E+03	2.82E+03	2.47E+00	8.05E-01	0.00E-01	1.48E+00	0.00E-01
BA141	4.23E-31	7.40E-30	1.30E-29	7.27E-33	6.29E-33	0.00E-01	4.27E-32	0.00E-01
BA142	3.70E-32	8.64E-33	6.62E-31	4.76E-34	3.86E-34	0.00E-01	2.80E-34	0.00E-01
LA140	5.46E-05	4.51E+00	4.63E-04	1.62E-04	0.00E-01	0.00E-01	0.00E-01	0.00E-01
LA142	6.30E-17	3.99E-11	6.32E-16	2.01E-16	0.00E-01	0.00E-01	0.00E-01	0.00E-01
CE141	3.86E-02	3.24E+02	5.21E-01	2.60E-01	1.14E-01	0.00E-01	0.00E-01	0.00E-01
CE143	3.52E-04	3.56E+01	4.48E-03	2.43E+00	1.02E-03	0.00E-01	0.00E-01	0.00E-01
CE144	2.00E+00	3.07E+03	3.75E+01	1.18E+01	6.52E+00	0.00E-01	0.00E-01	0.00E-01
PR143	8.60E-04	1.87E+01	1.73E-02	5.20E-03	2.82E-03	0.00E-01	0.00E-01	0.00E-01
PR144	4.35E-36	5.76E-32	8.66E-35	2.68E-35	1.42E-35	0.00E-01	0.00E-01	0.00E-01
ND147	6.77E-04	1.39E+01	1.08E-02	8.75E-03	4.80E-03	0.00E-01	0.00E-01	0.00E-01
W 187	1.82E-01	5.71E+01	6.86E-01	4.06E-01	0.00E-01	0.00E-01	0.00E-01	0.00E-01
NP239	2.09E-05	2.20E+00	4.14E-04	2.97E-05	8.59E-05	0.00E-01	0.00E-01	0.00E-01

DOSE TRANSFER FACTORS FOR RADIONUCLIDES IN EFFLUENT WATER

AGE = CHILD
PATHWAY = IRRIGATED STORED FEED--MEAT

	TOTAL BODY	GI-LLI	BONE	LIVER	KIDNEY	THYROID	LUNG	SKIN
				(mrem gal)/(Ci min)				
H 3	1.19E+00	1.19E+00	0.00E-01	1.19E+00	1.19E+00	1.19E+00	1.19E+00	0.00E-01
C 14	9.72E+03	9.72E+03	4.86E+04	9.72E+03	9.72E+03	9.72E+03	9.72E+03	0.00E-01
NA 24	4.37E-08	4.37E-08	4.37E-08	4.37E-08	4.37E-08	4.37E-08	4.37E-08	0.00E-01
P 32	6.95E+03	4.98E+03	1.80E+05	8.43E+03	0.00E-01	0.00E-01	0.00E-01	0.00E-01
CR 51	2.10E-01	1.11E+01	0.00E-01	0.00E-01	3.18E-02	1.16E-01	2.13E-01	0.00E-01
MN 54	4.94E+01	1.56E+02	0.00E-01	1.85E+02	5.20E+01	0.00E-01	0.00E-01	0.00E-01
MN 56	7.56E-29	4.86E-26	0.00E-01	3.35E-28	4.05E-28	0.00E-01	0.00E-01	0.00E-01
FE 55	1.73E+03	1.03E+03	1.05E+04	5.58E+03	0.00E-01	0.00E-01	3.16E+03	0.00E-01
FE 59	7.18E+03	1.50E+04	8.91E+03	1.44E+04	0.00E-01	0.00E-01	4.18E+03	0.00E-01
CO 58	1.18E+03	2.25E+03	0.00E-01	3.86E+02	0.00E-01	0.00E-01	0.00E-01	0.00E-01
CO 60	4.71E+03	8.85E+03	0.00E-01	1.60E+03	0.00E-01	0.00E-01	0.00E-01	0.00E-01
NI 63	2.31E+04	2.45E+03	6.79E+05	3.63E+04	0.00E-01	0.00E-01	0.00E-01	0.00E-01
NI 65	7.92E-27	1.66E-24	1.44E-25	1.36E-26	0.00E-01	0.00E-01	0.00E-01	0.00E-01
CU 64	3.95E-12	3.07E-10	0.00E-01	6.53E-12	1.58E-11	0.00E-01	0.00E-01	0.00E-01
ZN 65	1.47E+04	4.16E+03	8.88E+03	2.37E+04	1.49E+04	0.00E-01	0.00E-01	0.00E-01
ZN 69	5.16E-29	3.52E-26	3.86E-28	5.58E-28	3.39E-28	0.00E-01	0.00E-01	0.00E-01
BR 83	5.11E-27	0.00E-01	0.00E-01	0.00E-01	0.00E-01	0.00E-01	0.00E-01	0.00E-01
BR 84	4.77E-28	0.00E-01	0.00E-01	0.00E-01	0.00E-01	0.00E-01	0.00E-01	0.00E-01
BR 85	3.66E-36	0.00E-01	0.00E-01	0.00E-01	0.00E-01	0.00E-01	0.00E-01	0.00E-01
RB 86	8.56E+03	8.95E+02	0.00E-01	1.39E+04	0.00E-01	0.00E-01	0.00E-01	0.00E-01
RB 88	7.64E-29	5.39E-30	0.00E-01	1.10E-28	0.00E-01	0.00E-01	0.00E-01	0.00E-01
RB 89	3.46E-29	3.40E-31	0.00E-01	3.90E-29	0.00E-01	0.00E-01	0.00E-01	0.00E-01
SR 89	3.29E+02	4.47E+02	1.15E+04	0.00E-01	0.00E-01	0.00E-01	0.00E-01	0.00E-01
SR 90	1.22E+04	5.44E+03	6.08E+05	0.00E-01	0.00E-01	0.00E-01	0.00E-01	0.00E-01
SR 91	2.01E-16	1.17E-14	5.31E-15	0.00E-01	0.00E-01	0.00E-01	0.00E-01	0.00E-01
SR 92	2.93E-28	1.38E-25	7.30E-27	0.00E-01	0.00E-01	0.00E-01	0.00E-01	0.00E-01
Y 90	1.11E-04	1.18E+01	4.16E-03	0.00E-01	0.00E-01	0.00E-01	0.00E-01	0.00E-01
Y 91M	1.47E-32	7.90E-28	4.04E-31	0.00E-01	0.00E-01	0.00E-01	0.00E-01	0.00E-01
Y 91	1.14E+00	5.66E+03	4.25E+01	0.00E-01	0.00E-01	0.00E-01	0.00E-01	0.00E-01
Y 92	8.83E-31	8.92E-25	3.09E-29	0.00E-01	0.00E-01	0.00E-01	0.00E-01	0.00E-01
Y 93	4.49E-18	2.44E-12	1.64E-16	0.00E-01	0.00E-01	0.00E-01	0.00E-01	0.00E-01
ZR 95	1.23E+01	1.44E+04	6.28E+01	1.38E+01	1.97E+01	0.00E-01	0.00E-01	0.00E-01
ZR 97	6.41E-11	1.65E-05	7.52E-10	1.09E-10	1.56E-10	0.00E-01	0.00E-01	0.00E-01
NB 95	2.06E+01	5.32E+04	7.39E+01	2.88E+01	2.70E+01	0.00E-01	0.00E-01	0.00E-01
MO 99	6.80E-01	2.28E+00	0.00E-01	2.75E+00	5.87E+00	0.00E-01	0.00E-01	0.00E-01
TC 99M	4.50E-24	1.54E-22	1.39E-25	2.72E-25	3.95E-24	0.00E-01	1.38E-25	0.00E-01
TC101	4.62E-29	1.16E-29	3.48E-30	3.65E-30	6.22E-29	0.00E-01	1.93E-30	0.00E-01

DOSE TRANSFER FACTORS FOR RADIONUCLIDES IN EFFLUENT WATER

AGE = CHILD
PATHWAY = IRRIGATED STORED FEED--MEAT

	TOTAL BODY	GI-LLI	BONE	LIVER	KIDNEY	THYROID	LUNG	SKIN
				(mrem gal)/(Ci min)				
RU103	1.41E+03	9.52E+04	3.68E+03	0.00E-01	9.27E+03	0.00E-01	0.00E-01	0.00E-01
RU105	2.26E-26	4.07E-23	6.23E-26	0.00E-01	5.48E-25	0.00E-01	0.00E-01	0.00E-01
RU106	1.28E+04	1.60E+06	1.03E+05	0.00E-01	1.39E+05	0.00E-01	0.00E-01	0.00E-01
AG110M	1.06E+02	1.57E+04	1.96E+02	1.32E+02	2.46E+02	0.00E-01	0.00E-01	0.00E-01
TE125M	1.83E+03	1.32E+04	1.37E+04	3.71E+03	0.00E-01	3.85E+03	0.00E-01	0.00E-01
TE127M	5.09E+03	3.47E+04	4.28E+04	1.15E+04	1.22E+05	1.02E+04	0.00E-01	0.00E-01
TE127	1.68E-15	3.07E-13	7.86E-15	2.12E-15	2.23E-14	5.44E-15	0.00E-01	0.00E-01
TE129M	6.70E+03	5.27E+04	4.32E+04	1.21E+04	1.27E+05	1.39E+04	0.00E-01	0.00E-01
TE129	1.01E-27	2.64E-25	4.24E-27	1.19E-27	1.24E-26	3.03E-27	0.00E-01	0.00E-01
TE131M	6.17E-03	2.35E-01	1.68E-02	5.80E-03	5.61E-02	1.19E-02	0.00E-01	0.00E-01
TE131	9.76E-29	1.72E-27	3.28E-28	1.00E-28	9.92E-28	2.51E-28	0.00E-01	0.00E-01
TE132	2.76E+01	2.30E+02	5.16E+01	2.28E+01	2.12E+02	3.32E+01	0.00E-01	0.00E-01
I 130	1.43E-11	1.30E-11	1.38E-11	2.78E-11	4.16E-11	3.07E-09	0.00E-01	0.00E-01
I 131	4.57E+01	7.16E+00	7.99E+01	8.04E+01	1.32E+02	2.66E+04	0.00E-01	0.00E-01
I 132	2.14E-27	5.47E-27	2.53E-27	4.64E-27	7.11E-27	2.16E-25	0.00E-01	0.00E-01
I 133	1.28E-06	1.37E-06	2.74E-06	3.39E-06	5.65E-06	6.30E-04	0.00E-01	0.00E-01
I 134	2.65E-28	3.81E-28	3.10E-28	5.75E-28	8.80E-28	1.32E-26	0.00E-01	0.00E-01
I 135	2.26E-22	3.64E-22	2.66E-22	4.78E-22	7.33E-22	4.23E-20	0.00E-01	0.00E-01
CS134	7.36E+03	1.88E+02	2.13E+04	3.49E+04	1.08E+04	0.00E-01	3.88E+03	0.00E-01
CS136	6.92E+02	3.76E+01	3.89E+02	1.07E+03	5.69E+02	0.00E-01	8.49E+01	0.00E-01
CS137	4.36E+03	1.85E+02	3.08E+04	2.95E+04	9.62E+03	0.00E-01	3.46E+03	0.00E-01
CS138	7.67E-29	5.57E-29	8.70E-29	1.21E-28	8.51E-29	0.00E-01	9.16E-30	0.00E-01
BA139	2.05E-29	4.08E-26	7.07E-28	3.77E-31	3.29E-31	0.00E-01	2.22E-31	0.00E-01
BA140	6.18E+01	5.36E+02	1.06E+03	9.27E-01	3.02E-01	0.00E-01	5.53E-01	0.00E-01
BA141	4.20E-31	7.36E-30	1.29E-29	7.23E-33	6.25E-33	0.00E-01	4.25E-32	0.00E-01
BA142	3.68E-32	8.58E-33	6.58E-31	4.74E-34	3.83E-34	0.00E-01	2.79E-34	0.00E-01
LA140	1.60E-07	1.32E-02	1.36E-06	4.75E-07	0.00E-01	0.00E-01	0.00E-01	0.00E-01
LA142	6.59E-33	4.17E-27	6.60E-32	2.11E-32	0.00E-01	0.00E-01	0.00E-01	0.00E-01
CE141	3.92E-02	3.29E+02	5.29E-01	2.64E-01	1.16E-01	0.00E-01	0.00E-01	0.00E-01
CE143	6.25E-08	6.32E-03	7.96E-07	4.31E-04	1.81E-07	0.00E-01	0.00E-01	0.00E-01
CE144	2.86E+00	4.38E+03	5.36E+01	1.68E+01	9.30E+00	0.00E-01	0.00E-01	0.00E-01
PR143	4.01E-02	8.72E+02	8.08E-01	2.43E-01	1.32E-01	0.00E-01	0.00E-01	0.00E-01
PR144	5.09E-34	6.73E-30	1.01E-32	3.13E-33	1.65E-33	0.00E-01	0.00E-01	0.00E-01
ND147	1.80E-02	3.69E+02	2.88E-01	2.33E-01	1.28E-01	0.00E-01	0.00E-01	0.00E-01
W 187	2.15E-07	6.74E-05	8.10E-07	4.80E-07	0.00E-01	0.00E-01	0.00E-01	0.00E-01
NP239	5.25E-07	5.52E-02	1.04E-05	7.46E-07	2.16E-06	0.00E-01	0.00E-01	0.00E-01

DOSE TRANSFER FACTORS FOR RADIONUCLIDES IN EFFLUENT WATER

AGE = CHILD
PATHWAY = ANIMAL DRINKING WATER--MILK

	TOTAL BODY	GI-LLI	BONE	LIVER	KIDNEY	THYROID	LUNG	SKIN
				(mrem gal)/(Ci min)				
H 3	1.05E+01	1.05E+01	0.00E-01	1.05E+01	1.05E+01	1.05E+01	1.05E+01	0.00E-01
C 14	2.88E+02	2.88E+02	1.44E+03	2.88E+02	2.88E+02	2.88E+02	2.88E+02	0.00E-01
NA 24	2.41E+02	2.41E+02	2.41E+02	2.41E+02	2.41E+02	2.41E+02	2.41E+02	0.00E-01
P 32	7.15E+03	5.13E+03	1.86E+05	8.68E+03	0.00E-01	0.00E-01	0.00E-01	0.00E-01
CR 51	1.85E-01	9.80E+00	0.00E-01	0.00E-01	2.80E-02	1.03E-01	1.87E-01	0.00E-01
MN 54	7.05E+00	2.22E+01	0.00E-01	2.65E+01	7.42E+00	0.00E-01	0.00E-01	0.00E-01
MN 56	3.36E-07	2.16E-04	0.00E-01	1.49E-06	1.80E-06	0.00E-01	0.00E-01	0.00E-01
FE 55	2.25E+01	1.34E+01	1.37E+02	7.26E+01	0.00E-01	0.00E-01	4.11E+01	0.00E-01
FE 59	1.54E+02	3.21E+02	1.91E+02	3.08E+02	0.00E-01	0.00E-01	8.94E+01	0.00E-01
CO 58	5.37E+01	1.02E+02	0.00E-01	1.75E+01	0.00E-01	0.00E-01	0.00E-01	0.00E-01
CO 60	1.55E+02	2.91E+02	0.00E-01	5.25E+01	0.00E-01	0.00E-01	0.00E-01	0.00E-01
NI 63	1.22E+03	1.29E+02	3.58E+04	1.92E+03	0.00E-01	0.00E-01	0.00E-01	0.00E-01
NI 65	1.14E-05	2.39E-03	2.07E-04	1.95E-05	0.00E-01	0.00E-01	0.00E-01	0.00E-01
CU 64	1.41E+00	1.09E+02	0.00E-01	2.33E+00	5.64E+00	0.00E-01	0.00E-01	0.00E-01
ZN 65	8.74E+03	2.47E+03	5.28E+03	1.41E+04	8.86E+03	0.00E-01	0.00E-01	0.00E-01
ZN 69	6.36E-16	4.34E-13	4.76E-15	6.89E-15	4.18E-15	0.00E-01	0.00E-01	0.00E-01
BR 83	5.78E-05	0.00E-01	0.00E-01	0.00E-01	0.00E-01	0.00E-01	0.00E-01	0.00E-01
BR 84	2.33E-25	0.00E-01	0.00E-01	0.00E-01	0.00E-01	0.00E-01	0.00E-01	0.00E-01
BR 85	1.99E-32	0.00E-01	0.00E-01	0.00E-01	0.00E-01	0.00E-01	0.00E-01	0.00E-01
RB 86	1.14E+04	1.19E+03	0.00E-01	1.85E+04	0.00E-01	0.00E-01	0.00E-01	0.00E-01
RB 88	3.35E-26	2.37E-27	0.00E-01	4.83E-26	0.00E-01	0.00E-01	0.00E-01	0.00E-01
RB 89	1.78E-26	1.75E-28	0.00E-01	2.00E-26	0.00E-01	0.00E-01	0.00E-01	0.00E-01
SR 89	2.91E+02	3.95E+02	1.02E+04	0.00E-01	0.00E-01	0.00E-01	0.00E-01	0.00E-01
SR 90	4.09E+03	1.82E+03	2.03E+05	0.00E-01	0.00E-01	0.00E-01	0.00E-01	0.00E-01
SR 91	2.01E-01	1.17E+01	5.31E+00	0.00E-01	0.00E-01	0.00E-01	0.00E-01	0.00E-01
SR 92	1.05E-05	4.94E-03	2.61E-04	0.00E-01	0.00E-01	0.00E-01	0.00E-01	0.00E-01
Y 90	6.44E-05	6.85E+00	2.40E-03	0.00E-01	0.00E-01	0.00E-01	0.00E-01	0.00E-01
Y 91M	1.95E-24	1.05E-19	5.36E-23	0.00E-01	0.00E-01	0.00E-01	0.00E-01	0.00E-01
Y 91	1.56E-03	7.78E+00	5.84E-02	0.00E-01	0.00E-01	0.00E-01	0.00E-01	0.00E-01
Y 92	7.21E-10	7.28E-04	2.52E-08	0.00E-01	0.00E-01	0.00E-01	0.00E-01	0.00E-01
Y 93	1.07E-06	5.81E-01	3.90E-05	0.00E-01	0.00E-01	0.00E-01	0.00E-01	0.00E-01
ZR 95	1.10E-03	1.29E+00	5.64E-03	1.24E-03	1.77E-03	0.00E-01	0.00E-01	0.00E-01
ZR 97	3.96E-06	1.02E+00	4.65E-05	6.72E-06	9.64E-06	0.00E-01	0.00E-01	0.00E-01
NB 95	1.49E-01	3.86E+02	5.37E-01	2.09E-01	1.96E-01	0.00E-01	0.00E-01	0.00E-01
MO 99	1.46E+02	4.90E+02	0.00E-01	5.92E+02	1.26E+03	0.00E-01	0.00E-01	0.00E-01
TC 99M	2.64E-02	9.05E-01	8.11E-04	1.59E-03	2.31E-02	0.00E-01	8.07E-04	0.00E-01
TC101	1.65E-27	4.13E-28	1.24E-28	1.30E-28	2.22E-27	0.00E-01	6.87E-29	0.00E-01

DOSE TRANSFER FACTORS FOR RADIONUCLIDES IN EFFLUENT WATER

AGE = CHILD
PATHWAY = ANIMAL DRINKING WATER--MILK

	TOTAL BODY	GI-LLI	BONE	LIVER	KIDNEY	THYROID	LUNG	SKIN
				(mrem gal)/(Ci min)				
RU103	2.69E-03	1.81E-01	7.01E-03	0.00E-01	1.76E-02	0.00E-01	0.00E-01	0.00E-01
RU105	1.10E-07	1.98E-04	3.03E-07	0.00E-01	2.67E-06	0.00E-01	0.00E-01	0.00E-01
RU106	1.44E-02	1.80E+00	1.16E-01	0.00E-01	1.56E-01	0.00E-01	0.00E-01	0.00E-01
AG110M	1.44E+02	2.14E+04	2.66E+02	1.80E+02	3.35E+02	0.00E-01	0.00E-01	0.00E-01
TE125M	1.47E+01	1.07E+02	1.10E+02	3.00E+01	0.00E-01	3.10E+01	0.00E-01	0.00E-01
TE127M	3.36E+01	2.29E+02	2.83E+02	7.63E+01	8.08E+02	6.78E+01	0.00E-01	0.00E-01
TE127	2.65E-02	4.83E+00	1.24E-01	3.33E-02	3.52E-01	8.56E-02	0.00E-01	0.00E-01
TE129M	7.20E+01	5.66E+02	4.64E+02	1.29E+02	1.36E+03	1.49E+02	0.00E-01	0.00E-01
TE129	6.06E-14	1.59E-11	2.55E-13	7.13E-14	7.47E-13	1.82E-13	0.00E-01	0.00E-01
TE131M	8.48E+00	3.23E+02	2.30E+01	7.97E+00	7.72E+01	1.64E+01	0.00E-01	0.00E-01
TE131	4.09E-28	7.21E-27	1.37E-27	4.19E-28	4.15E-27	1.05E-27	0.00E-01	0.00E-01
TE132	3.48E+01	2.90E+02	6.50E+01	2.88E+01	2.67E+02	4.19E+01	0.00E-01	0.00E-01
I 130	1.16E+01	1.05E+01	1.11E+01	2.24E+01	3.35E+01	2.47E+03	0.00E-01	0.00E-01
I 131	4.91E+02	7.70E+01	8.60E+02	8.65E+02	1.42E+03	2.86E+05	0.00E-01	0.00E-01
I 132	1.56E-05	3.99E-05	1.85E-05	3.39E-05	5.19E-05	1.57E-03	0.00E-01	0.00E-01
I 133	3.23E+01	3.44E+01	6.90E+01	8.53E+01	1.42E+02	1.59E+04	0.00E-01	0.00E-01
I 134	2.99E-16	4.30E-16	3.50E-16	6.49E-16	9.93E-16	1.49E-14	0.00E-01	0.00E-01
I 135	5.15E-01	8.29E-01	6.04E-01	1.09E+00	1.67E+00	9.64E+01	0.00E-01	0.00E-01
CS134	9.64E+03	2.46E+02	2.78E+04	4.57E+04	1.42E+04	0.00E-01	5.08E+03	0.00E-01
CS136	4.47E+03	2.43E+02	2.51E+03	6.91E+03	3.68E+03	0.00E-01	5.49E+02	0.00E-01
CS137	5.51E+03	2.34E+02	3.90E+04	3.73E+04	1.22E+04	0.00E-01	4.37E+03	0.00E-01
CS138	5.78E-26	4.20E-26	6.56E-26	9.12E-26	6.42E-26	0.00E-01	6.91E-27	0.00E-01
BA139	8.98E-13	1.79E-09	3.10E-11	1.65E-14	1.44E-14	0.00E-01	9.72E-15	0.00E-01
BA140	1.73E+01	1.50E+02	2.96E+02	2.59E-01	8.43E-02	0.00E-01	1.54E-01	0.00E-01
BA141	2.33E-29	4.08E-28	7.15E-28	4.01E-31	3.47E-31	0.00E-01	2.35E-30	0.00E-01
BA142	3.48E-30	8.13E-31	6.23E-29	4.48E-32	3.63E-32	0.00E-01	2.64E-32	0.00E-01
LA140	2.54E-05	2.10E+00	2.16E-04	7.55E-05	0.00E-01	0.00E-01	0.00E-01	0.00E-01
LA142	6.89E-16	4.36E-10	6.91E-15	2.20E-15	0.00E-01	0.00E-01	0.00E-01	0.00E-01
CE141	2.80E-03	2.35E+01	3.78E-02	1.88E-02	8.26E-03	0.00E-01	0.00E-01	0.00E-01
CE143	1.96E-04	1.98E+01	2.49E-03	1.35E+00	5.67E-04	0.00E-01	0.00E-01	0.00E-01
CE144	1.10E-01	1.68E+02	2.06E+00	6.45E-01	3.57E-01	0.00E-01	0.00E-01	0.00E-01
PR143	8.73E-05	1.90E+00	1.76E-03	5.28E-04	2.86E-04	0.00E-01	0.00E-01	0.00E-01
PR144	2.54E-34	3.36E-30	5.05E-33	1.56E-33	8.26E-34	0.00E-01	0.00E-01	0.00E-01
ND147	7.65E-05	1.57E+00	1.22E-03	9.88E-04	5.42E-04	0.00E-01	0.00E-01	0.00E-01
W 187	1.37E-01	4.29E+01	5.15E-01	3.05E-01	0.00E-01	0.00E-01	0.00E-01	0.00E-01
NP239	7.23E-06	7.61E-01	1.43E-04	1.03E-05	2.97E-05	0.00E-01	0.00E-01	0.00E-01

DOSE TRANSFER FACTORS FOR RADIONUCLIDES IN EFFLUENT WATER

AGE = CHILD
PATHWAY = ANIMAL DRINKING WATER--MEAT

	TOTAL BODY	GI-LLI	BONE	LIVER	KIDNEY	THYROID	LUNG	SKIN
				(mrem gal)/(Ci min)				
H 3	1.19E+00	1.19E+00	0.00E-01	1.19E+00	1.19E+00	1.19E+00	1.19E+00	0.00E-01
C 14	7.72E+01	7.72E+01	3.86E+02	7.72E+01	7.72E+01	7.72E+01	7.72E+01	0.00E-01
NA 24	4.24E-08	4.24E-08	4.24E-08	4.24E-08	4.24E-08	4.24E-08	4.24E-08	0.00E-01
P 32	5.70E+02	4.08E+02	1.48E+04	6.91E+02	0.00E-01	0.00E-01	0.00E-01	0.00E-01
CR 51	1.33E-02	7.05E-01	0.00E-01	0.00E-01	2.02E-03	7.38E-03	1.35E-02	0.00E-01
MN 54	2.24E+00	7.07E+00	0.00E-01	8.42E+00	2.36E+00	0.00E-01	0.00E-01	0.00E-01
MN 56	4.15E-28	2.66E-25	0.00E-01	1.84E-27	2.22E-27	0.00E-01	0.00E-01	0.00E-01
FE 55	7.67E+01	4.58E+01	4.67E+02	2.47E+02	0.00E-01	0.00E-01	1.40E+02	0.00E-01
FE 59	4.01E+02	8.38E+02	4.97E+02	8.04E+02	0.00E-01	0.00E-01	2.33E+02	0.00E-01
CO 58	6.06E+01	1.15E+02	0.00E-01	1.98E+01	0.00E-01	0.00E-01	0.00E-01	0.00E-01
CO 60	2.07E+02	3.89E+02	0.00E-01	7.02E+01	0.00E-01	0.00E-01	0.00E-01	0.00E-01
NI 63	9.97E+02	1.06E+02	2.93E+04	1.57E+03	0.00E-01	0.00E-01	0.00E-01	0.00E-01
NI 65	4.42E-26	9.28E-24	8.05E-25	7.58E-26	0.00E-01	0.00E-01	0.00E-01	0.00E-01
CU 64	4.52E-12	3.51E-10	0.00E-01	7.48E-12	1.81E-11	0.00E-01	0.00E-01	0.00E-01
ZN 65	6.62E+02	1.87E+02	3.99E+02	1.06E+03	6.70E+02	0.00E-01	0.00E-01	0.00E-01
ZN 69	7.61E-28	5.19E-25	5.70E-27	8.24E-27	5.00E-27	0.00E-01	0.00E-01	0.00E-01
BR 83	3.00E-26	0.00E-01	0.00E-01	0.00E-01	0.00E-01	0.00E-01	0.00E-01	0.00E-01
BR 84	1.25E-26	0.00E-01	0.00E-01	0.00E-01	0.00E-01	0.00E-01	0.00E-01	0.00E-01
BR 85	1.07E-33	0.00E-01	0.00E-01	0.00E-01	0.00E-01	0.00E-01	0.00E-01	0.00E-01
RB 86	6.25E+02	6.54E+01	0.00E-01	1.02E+03	0.00E-01	0.00E-01	0.00E-01	0.00E-01
RB 88	3.59E-27	2.53E-28	0.00E-01	5.17E-27	0.00E-01	0.00E-01	0.00E-01	0.00E-01
RB 89	1.90E-27	1.87E-29	0.00E-01	2.14E-27	0.00E-01	0.00E-01	0.00E-01	0.00E-01
SR 89	1.77E+01	2.40E+01	6.19E+02	0.00E-01	0.00E-01	0.00E-01	0.00E-01	0.00E-01
SR 90	3.17E+02	1.41E+02	1.58E+04	0.00E-01	0.00E-01	0.00E-01	0.00E-01	0.00E-01
SR 91	3.03E-16	1.77E-14	8.03E-15	0.00E-01	0.00E-01	0.00E-01	0.00E-01	0.00E-01
SR 92	1.51E-27	7.16E-25	3.78E-26	0.00E-01	0.00E-01	0.00E-01	0.00E-01	0.00E-01
Y 90	2.89E-05	3.07E+00	1.08E-03	0.00E-01	0.00E-01	0.00E-01	0.00E-01	0.00E-01
Y 91M	2.49E-31	1.34E-26	6.84E-30	0.00E-01	0.00E-01	0.00E-01	0.00E-01	0.00E-01
Y 91	6.01E-02	2.99E+02	2.25E+00	0.00E-01	0.00E-01	0.00E-01	0.00E-01	0.00E-01
Y 92	3.51E-30	3.55E-24	1.23E-28	0.00E-01	0.00E-01	0.00E-01	0.00E-01	0.00E-01
Y 93	6.41E-18	3.48E-12	2.34E-16	0.00E-01	0.00E-01	0.00E-01	0.00E-01	0.00E-01
ZR 95	6.39E-01	7.49E+02	3.27E+00	7.18E-01	1.03E+00	0.00E-01	0.00E-01	0.00E-01
ZR 97	5.57E-11	1.43E-05	6.53E-10	9.44E-11	1.36E-10	0.00E-01	0.00E-01	0.00E-01
NB 95	1.22E+00	3.14E+03	4.37E+00	1.70E+00	1.60E+00	0.00E-01	0.00E-01	0.00E-01
MO 99	1.72E-01	5.77E-01	0.00E-01	6.97E-01	1.49E+00	0.00E-01	0.00E-01	0.00E-01
TC 99M	1.06E-23	3.65E-22	3.27E-25	6.42E-25	9.32E-24	0.00E-01	3.26E-25	0.00E-01
TC101	2.73E-27	6.85E-28	2.06E-28	2.15E-28	3.67E-27	0.00E-01	1.14E-28	0.00E-01

DOSE TRANSFER FACTORS FOR RADIONUCLIDES IN EFFLUENT WATER

AGE = CHILD
PATHWAY = ANIMAL DRINKING WATER--MEAT

	TOTAL BODY	GI-LLI	BONE	LIVER	KIDNEY	THYROID	LUNG	SKIN
				(mrem gal)/(Ci min)				
RU103	8.12E+01	5.46E+03	2.11E+02	0.00E-01	5.32E+02	0.00E-01	0.00E-01	0.00E-01
RU105	7.21E-26	1.30E-22	1.99E-25	0.00E-01	1.75E-24	0.00E-01	0.00E-01	0.00E-01
RU106	5.78E+02	7.21E+04	4.64E+03	0.00E-01	6.26E+03	0.00E-01	0.00E-01	0.00E-01
AG110M	4.82E+00	7.16E+02	8.92E+00	6.02E+00	1.12E+01	0.00E-01	0.00E-01	0.00E-01
TE125M	9.48E+01	6.86E+02	7.11E+02	1.93E+02	0.00E-01	2.00E+02	0.00E-01	0.00E-01
TE127M	2.39E+02	1.63E+03	2.01E+03	5.42E+02	5.75E+03	4.82E+02	0.00E-01	0.00E-01
TE127	2.58E-15	4.70E-13	1.20E-14	3.24E-15	3.42E-14	8.32E-15	0.00E-01	0.00E-01
TE129M	3.96E+02	3.11E+03	2.55E+03	7.12E+02	7.49E+03	8.22E+02	0.00E-01	0.00E-01
TE129	1.21E-26	3.18E-24	5.11E-26	1.43E-26	1.50E-25	3.65E-26	0.00E-01	0.00E-01
TE131M	3.12E-03	1.19E-01	8.47E-03	2.93E-03	2.84E-02	6.03E-03	0.00E-01	0.00E-01
TE131	3.26E-27	5.75E-26	1.10E-26	3.34E-27	3.31E-26	8.38E-27	0.00E-01	0.00E-01
TE132	6.04E+00	5.03E+01	1.13E+01	5.00E+00	4.64E+01	7.28E+00	0.00E-01	0.00E-01
I 130	1.68E-11	1.53E-11	1.62E-11	3.27E-11	4.88E-11	3.60E-09	0.00E-01	0.00E-01
I 131	5.21E+00	8.16E-01	9.11E+00	9.17E+00	1.51E+01	3.03E+03	0.00E-01	0.00E-01
I 132	1.31E-26	3.34E-26	1.55E-26	2.84E-26	4.35E-26	1.32E-24	0.00E-01	0.00E-01
I 133	9.14E-07	9.73E-07	1.95E-06	2.41E-06	4.03E-06	4.49E-04	0.00E-01	0.00E-01
I 134	4.24E-27	6.10E-27	4.96E-27	9.20E-27	1.41E-26	2.12E-25	0.00E-01	0.00E-01
I 135	4.88E-22	7.87E-22	5.74E-22	1.03E-21	1.58E-21	9.14E-20	0.00E-01	0.00E-01
CS134	3.27E+02	8.36E+00	9.45E+02	1.55E+03	4.81E+02	0.00E-01	1.72E+02	0.00E-01
CS136	5.96E+01	3.24E+00	3.35E+01	9.21E+01	4.90E+01	0.00E-01	7.32E+00	0.00E-01
CS137	1.90E+02	8.06E+00	1.34E+03	1.29E+03	4.19E+02	0.00E-01	1.51E+02	0.00E-01
CS138	2.00E-27	1.45E-27	2.26E-27	3.15E-27	2.21E-27	0.00E-01	2.38E-28	0.00E-01
BA139	2.09E-28	4.16E-25	7.21E-27	3.85E-30	3.36E-30	0.00E-01	2.26E-30	0.00E-01
BA140	5.39E+00	4.68E+01	9.24E+01	8.09E-02	2.63E-02	0.00E-01	4.82E-02	0.00E-01
BA141	1.93E-29	3.38E-28	5.93E-28	3.32E-31	2.87E-31	0.00E-01	1.95E-30	0.00E-01
BA142	2.88E-30	6.73E-31	5.16E-29	3.71E-32	3.01E-32	0.00E-01	2.18E-32	0.00E-01
LA140	6.23E-08	5.15E-03	5.28E-07	1.85E-07	0.00E-01	0.00E-01	0.00E-01	0.00E-01
LA142	6.01E-32	3.80E-26	6.02E-31	1.92E-31	0.00E-01	0.00E-01	0.00E-01	0.00E-01
CE141	2.37E-03	1.99E+01	3.20E-02	1.59E-02	6.99E-03	0.00E-01	0.00E-01	0.00E-01
CE143	2.90E-08	2.93E-03	3.69E-07	2.00E-04	8.39E-08	0.00E-01	0.00E-01	0.00E-01
CE144	1.31E-01	2.00E+02	2.44E+00	7.66E-01	4.24E-01	0.00E-01	0.00E-01	0.00E-01
PR143	3.39E-03	7.38E+01	6.84E-02	2.05E-02	1.11E-02	0.00E-01	0.00E-01	0.00E-01
PR144	2.47E-32	3.27E-28	4.91E-31	1.52E-31	8.04E-32	0.00E-01	0.00E-01	0.00E-01
ND147	1.70E-03	3.47E+01	2.71E-02	2.19E-02	1.20E-02	0.00E-01	0.00E-01	0.00E-01
W 187	1.35E-07	4.22E-05	5.07E-07	3.00E-07	0.00E-01	0.00E-01	0.00E-01	0.00E-01
NP239	1.51E-07	1.59E-02	3.00E-06	2.15E-07	6.22E-07	0.00E-01	0.00E-01	0.00E-01

DOSE TRANSFER FACTORS FOR RADIONUCLIDES IN EFFLUENT WATER

AGE = CHILD
PATHWAY = RIVER SHORELINE DEPOSITS

	TOTAL BODY	GI-LLI	BONE	LIVER	KIDNEY	THYROID	LUNG	SKIN
				(mrem gal)/(Ci min)				
H 3	0.00E-01	0.00E-01	0.00E-01	0.00E-01	0.00E-01	0.00E-01	0.00E-01	0.00E-01
C 14	0.00E-01	0.00E-01	0.00E-01	0.00E-01	0.00E-01	0.00E-01	0.00E-01	0.00E-01
NA 24	2.19E+00	2.19E+00	2.19E+00	2.19E+00	2.19E+00	2.19E+00	2.19E+00	2.54E+00
P 32	0.00E-01	0.00E-01	0.00E-01	0.00E-01	0.00E-01	0.00E-01	0.00E-01	0.00E-01
CR 51	8.55E-01	8.55E-01	8.55E-01	8.55E-01	8.55E-01	8.55E-01	8.55E-01	1.01E+00
MN 54	2.54E+02	2.54E+02	2.54E+02	2.54E+02	2.54E+02	2.54E+02	2.54E+02	2.98E+02
MN 56	1.61E-01	1.61E-01	1.61E-01	1.61E-01	1.61E-01	1.61E-01	1.61E-01	1.90E-01
FE 55	0.00E-01	0.00E-01	0.00E-01	0.00E-01	0.00E-01	0.00E-01	0.00E-01	0.00E-01
FE 59	5.01E+01	5.01E+01	5.01E+01	5.01E+01	5.01E+01	5.01E+01	5.01E+01	5.88E+01
CO 58	6.98E+01	6.98E+01	6.98E+01	6.98E+01	6.98E+01	6.98E+01	6.98E+01	8.18E+01
CO 60	3.95E+03	3.95E+03	3.95E+03	3.95E+03	3.95E+03	3.95E+03	3.95E+03	4.65E+03
NI 63	0.00E-01	0.00E-01	0.00E-01	0.00E-01	0.00E-01	0.00E-01	0.00E-01	0.00E-01
NI 65	5.31E-02	5.31E-02	5.31E-02	5.31E-02	5.31E-02	5.31E-02	5.31E-02	6.17E-02
CU 64	1.11E-01	1.11E-01	1.11E-01	1.11E-01	1.11E-01	1.11E-01	1.11E-01	1.25E-01
ZN 65	1.37E+02	1.37E+02	1.37E+02	1.37E+02	1.37E+02	1.37E+02	1.37E+02	1.58E+02
ZN 69	0.00E-01	0.00E-01	0.00E-01	0.00E-01	0.00E-01	0.00E-01	0.00E-01	0.00E-01
BR 83	8.70E-04	8.70E-04	8.70E-04	8.70E-04	8.70E-04	8.70E-04	8.70E-04	1.26E-03
BR 84	3.27E-02	3.27E-02	3.27E-02	3.27E-02	3.27E-02	3.27E-02	3.27E-02	3.81E-02
BR 85	0.00E-01	0.00E-01	0.00E-01	0.00E-01	0.00E-01	0.00E-01	0.00E-01	0.00E-01
RB 86	1.65E+00	1.65E+00	1.65E+00	1.65E+00	1.65E+00	1.65E+00	1.65E+00	1.89E+00
RB 88	4.83E-03	4.83E-03	4.83E-03	4.83E-03	4.83E-03	4.83E-03	4.83E-03	5.52E-03
RB 89	1.70E-02	1.70E-02	1.70E-02	1.70E-02	1.70E-02	1.70E-02	1.70E-02	2.04E-02
SR 89	3.97E-03	3.97E-03	3.97E-03	3.97E-03	3.97E-03	3.97E-03	3.97E-03	4.61E-03
SR 90	0.00E-01	0.00E-01	0.00E-01	0.00E-01	0.00E-01	0.00E-01	0.00E-01	0.00E-01
SR 91	3.91E-01	3.91E-01	3.91E-01	3.91E-01	3.91E-01	3.91E-01	3.91E-01	4.57E-01
SR 92	1.39E-01	1.39E-01	1.39E-01	1.39E-01	1.39E-01	1.39E-01	1.39E-01	1.55E-01
Y 90	8.25E-04	8.25E-04	8.25E-04	8.25E-04	8.25E-04	8.25E-04	8.25E-04	9.76E-04
Y 91M	1.69E-02	1.69E-02	1.69E-02	1.69E-02	1.69E-02	1.69E-02	1.69E-02	1.96E-02
Y 91	1.97E-01	1.97E-01	1.97E-01	1.97E-01	1.97E-01	1.97E-01	1.97E-01	2.22E-01
Y 92	3.26E-02	3.26E-02	3.26E-02	3.26E-02	3.26E-02	3.26E-02	3.26E-02	3.87E-02
Y 93	3.34E-02	3.34E-02	3.34E-02	3.34E-02	3.34E-02	3.34E-02	3.34E-02	4.57E-02
ZR 95	4.51E+01	4.51E+01	4.51E+01	4.51E+01	4.51E+01	4.51E+01	4.51E+01	5.23E+01
ZR 97	5.41E-01	5.41E-01	5.41E-01	5.41E-01	5.41E-01	5.41E-01	5.41E-01	6.30E-01
NB 95	2.52E+01	2.52E+01	2.52E+01	2.52E+01	2.52E+01	2.52E+01	2.52E+01	2.96E+01
MO 99	7.33E-01	7.33E-01	7.33E-01	7.33E-01	7.33E-01	7.33E-01	7.33E-01	8.48E-01
TC 99M	3.34E-02	3.34E-02	3.34E-02	3.34E-02	3.34E-02	3.34E-02	3.34E-02	3.83E-02
TC101	2.79E-03	2.79E-03	2.79E-03	2.79E-03	2.79E-03	2.79E-03	2.79E-03	3.10E-03

DOSE TRANSFER FACTORS FOR RADIONUCLIDES IN EFFLUENT WATER

AGE = CHILD
PATHWAY = RIVER SHORELINE DEPOSITS

	TOTAL BODY	GI-LLI	BONE	LIVER	KIDNEY	THYROID	LUNG	SKIN
				(mrem gal)/(Ci min)				
RU103	1.99E+01	1.99E+01	1.99E+01	1.99E+01	1.99E+01	1.99E+01	1.99E+01	2.32E+01
RU105	1.15E-01	1.15E-01	1.15E-01	1.15E-01	1.15E-01	1.15E-01	1.15E-01	1.30E-01
RU106	7.75E+01	7.75E+01	7.75E+01	7.75E+01	7.75E+01	7.75E+01	7.75E+01	9.31E+01
AG110M	6.34E+02	6.34E+02	6.34E+02	6.34E+02	6.34E+02	6.34E+02	6.34E+02	7.39E+02
TE125M	2.86E-01	2.86E-01	2.86E-01	2.86E-01	2.86E-01	2.86E-01	2.86E-01	3.92E-01
TE127M	1.68E-02	1.68E-02	1.68E-02	1.68E-02	1.68E-02	1.68E-02	1.68E-02	1.99E-02
TE127	5.43E-04	5.43E-04	5.43E-04	5.43E-04	5.43E-04	5.43E-04	5.43E-04	5.97E-04
TE129M	3.63E+00	3.63E+00	3.63E+00	3.63E+00	3.63E+00	3.63E+00	3.63E+00	4.24E+00
TE129	4.54E-03	4.54E-03	4.54E-03	4.54E-03	4.54E-03	4.54E-03	4.54E-03	5.37E-03
TE131M	1.47E+00	1.47E+00	1.47E+00	1.47E+00	1.47E+00	1.47E+00	1.47E+00	1.73E+00
TE131	4.56E-03	4.56E-03	4.56E-03	4.56E-03	4.56E-03	4.56E-03	4.56E-03	5.38E+00
TE132	7.78E-01	7.78E-01	7.78E-01	7.78E-01	7.78E-01	7.78E-01	7.78E-01	9.15E-01
I 130	1.01E+00	1.01E+00	1.01E+00	1.01E+00	1.01E+00	1.01E+00	1.01E+00	1.22E+00
I 131	3.16E+00	3.16E+00	3.16E+00	3.16E+00	3.16E+00	3.16E+00	3.16E+00	3.84E+00
I 132	2.22E-01	2.22E-01	2.22E-01	2.22E-01	2.22E-01	2.22E-01	2.22E-01	2.61E-01
I 133	4.49E-01	4.49E-01	4.49E-01	4.49E-01	4.49E-01	4.49E-01	4.49E-01	5.46E-01
I 134	7.57E-02	7.57E-02	7.57E-02	7.57E-02	7.57E-02	7.57E-02	7.57E-02	8.99E-02
I 135	4.58E-01	4.58E-01	4.58E-01	4.58E-01	4.58E-01	4.58E-01	4.58E-01	5.35E-01
CS134	1.26E+03	1.26E+03	1.26E+03	1.26E+03	1.26E+03	1.26E+03	1.26E+03	1.46E+03
CS136	2.76E+01	2.76E+01	2.76E+01	2.76E+01	2.76E+01	2.76E+01	2.76E+01	3.13E+01
CS137	1.89E+03	1.89E+03	1.89E+03	1.89E+03	1.89E+03	1.89E+03	1.89E+03	2.21E+03
CS138	5.81E-02	5.81E-02	5.81E-02	5.81E-02	5.81E-02	5.81E-02	5.81E-02	6.64E-02
BA139	1.84E-02	1.84E-02	1.84E-02	1.84E-02	1.84E-02	1.84E-02	1.84E-02	2.07E-02
BA140	3.77E+00	3.77E+00	3.77E+00	3.77E+00	3.77E+00	3.77E+00	3.77E+00	4.31E+00
BA141	6.11E-03	6.11E-03	6.11E-03	6.11E-03	6.11E-03	6.11E-03	6.11E-03	6.96E-03
BA142	5.59E-03	5.59E-03	5.59E-03	5.59E-03	5.59E-03	5.59E-03	5.59E-03	6.37E-03
LA140	3.53E+00	3.53E+00	3.53E+00	3.53E+00	3.53E+00	3.53E+00	3.53E+00	4.00E+00
LA142	1.29E-01	1.29E-01	1.29E-01	1.29E-01	1.29E-01	1.29E-01	1.29E-01	1.55E-01
CE141	2.51E+00	2.51E+00	2.51E+00	2.51E+00	2.51E+00	2.51E+00	2.51E+00	2.83E+00
CE143	4.26E-01	4.26E-01	4.26E-01	4.26E-01	4.26E-01	4.26E-01	4.26E-01	4.84E-01
CE144	1.28E+01	1.28E+01	1.28E+01	1.28E+01	1.28E+01	1.28E+01	1.28E+01	1.48E+01
PR143	0.00E-01	0.00E-01	0.00E-01	0.00E-01	0.00E-01	0.00E-01	0.00E-01	0.00E-01
PR144	2.65E-04	2.65E-04	2.65E-04	2.65E-04	2.65E-04	2.65E-04	2.65E-04	3.04E-04
ND147	1.56E+00	1.56E+00	1.56E+00	1.56E+00	1.56E+00	1.56E+00	1.56E+00	1.87E+00
W 187	4.33E-01	4.33E-01	4.33E-01	4.33E-01	4.33E-01	4.33E-01	4.33E-01	5.02E-01
NP239	3.15E-01	3.15E-01	3.15E-01	3.15E-01	3.15E-01	3.15E-01	3.15E-01	3.64E-01

DOSE TRANSFER FACTORS FOR RADIONUCLIDES IN EFFLUENT WATER

AGE = CHILD
PATHWAY = SWIMMING

	TOTAL BODY	GI-LLI	BONE	LIVER	KIDNEY	THYROID	LUNG	SKIN
				(mrem gal)/(Ci min)				
H 3	0.00E-01	0.00E-01	0.00E-01	0.00E-01	0.00E-01	0.00E-01	0.00E-01	0.00E-01
C 14	0.00E-01	0.00E-01	0.00E-01	0.00E-01	0.00E-01	0.00E-01	0.00E-01	0.00E-01
NA 24	1.09E+02	1.09E+02	1.09E+02	1.09E+02	1.09E+02	1.09E+02	1.09E+02	0.00E-01
P 32	8.99E-02	8.99E-02	8.99E-02	8.99E-02	8.99E-02	8.99E-02	8.99E-02	0.00E-01
CR 51	7.30E-01	7.30E-01	7.30E-01	7.30E-01	7.30E-01	7.30E-01	7.30E-01	0.00E-01
MN 54	2.11E+01	2.11E+01	2.11E+01	2.11E+01	2.11E+01	2.11E+01	2.11E+01	0.00E-01
MN 56	4.38E+01	4.38E+01	4.38E+01	4.38E+01	4.38E+01	4.38E+01	4.38E+01	0.00E-01
FE 55	8.99E-04	8.99E-04	8.99E-04	8.99E-04	8.99E-04	8.99E-04	8.99E-04	0.00E-01
FE 59	3.09E+01	3.09E+01	3.09E+01	3.09E+01	3.09E+01	3.09E+01	3.09E+01	0.00E-01
CO 58	2.53E+01	2.53E+01	2.53E+01	2.53E+01	2.53E+01	2.53E+01	2.53E+01	0.00E-01
CO 60	6.46E+01	6.46E+01	6.46E+01	6.46E+01	6.46E+01	6.46E+01	6.46E+01	0.00E-01
NI 63	0.00E-01	0.00E-01	0.00E-01	0.00E-01	0.00E-01	0.00E-01	0.00E-01	0.00E-01
NI 65	1.37E+01	1.37E+01	1.37E+01	1.37E+01	1.37E+01	1.37E+01	1.37E+01	0.00E-01
CU 64	5.17E+00	5.17E+00	5.17E+00	5.17E+00	5.17E+00	5.17E+00	5.17E+00	0.00E-01
ZN 65	1.55E+01	1.55E+01	1.55E+01	1.55E+01	1.55E+01	1.55E+01	1.55E+01	0.00E-01
ZN 69	2.09E-02	2.09E-02	2.09E-02	2.09E-02	2.09E-02	2.09E-02	2.09E-02	0.00E-01
BR 83	2.32E-01	2.32E-01	2.32E-01	2.32E-01	2.32E-01	2.32E-01	2.32E-01	0.00E-01
BR 84	4.32E+01	4.32E+01	4.32E+01	4.32E+01	4.32E+01	4.32E+01	4.32E+01	0.00E-01
BR 85	4.61E-02	4.61E-02	4.61E-02	4.61E-02	4.61E-02	4.61E-02	4.61E-02	0.00E-01
RB 86	2.39E+00	2.39E+00	2.39E+00	2.39E+00	2.39E+00	2.39E+00	2.39E+00	0.00E-01
RB 88	1.34E+01	1.34E+01	1.34E+01	1.34E+01	1.34E+01	1.34E+01	1.34E+01	0.00E-01
RB 89	4.81E+01	4.81E+01	4.81E+01	4.81E+01	4.81E+01	4.81E+01	4.81E+01	0.00E-01
SR 89	6.46E-02	6.46E-02	6.46E-02	6.46E-02	6.46E-02	6.46E-02	6.46E-02	0.00E-01
SR 90	7.59E-03	7.59E-03	7.59E-03	7.59E-03	7.59E-03	7.59E-03	7.59E-03	0.00E-01
SR 91	2.65E+01	2.65E+01	2.65E+01	2.65E+01	2.65E+01	2.65E+01	2.65E+01	0.00E-01
SR 92	3.56E+01	3.56E+01	3.56E+01	3.56E+01	3.56E+01	3.56E+01	3.56E+01	0.00E-01
Y 90	1.83E-01	1.83E-01	1.83E-01	1.83E-01	1.83E-01	1.83E-01	1.83E-01	0.00E-01
Y 91M	1.29E+01	1.29E+01	1.29E+01	1.29E+01	1.29E+01	1.29E+01	1.29E+01	0.00E-01
Y 91	9.41E-02	9.41E-02	9.41E-02	9.41E-02	9.41E-02	9.41E-02	9.41E-02	0.00E-01
Y 92	6.34E+00	6.34E+00	6.34E+00	6.34E+00	6.34E+00	6.34E+00	6.34E+00	0.00E-01
Y 93	2.65E+00	2.65E+00	2.65E+00	2.65E+00	2.65E+00	2.65E+00	2.65E+00	0.00E-01
ZR 95	2.11E+01	2.11E+01	2.11E+01	2.11E+01	2.11E+01	2.11E+01	2.11E+01	0.00E-01
ZR 97	2.10E+01	2.10E+01	2.10E+01	2.10E+01	2.10E+01	2.10E+01	2.10E+01	0.00E-01
NB 95	1.97E+01	1.97E+01	1.97E+01	1.97E+01	1.97E+01	1.97E+01	1.97E+01	0.00E-01
MO 99	6.60E+00	6.60E+00	6.60E+00	6.60E+00	6.60E+00	6.60E+00	6.60E+00	0.00E-01
TC 99M	3.33E+00	3.33E+00	3.33E+00	3.33E+00	3.33E+00	3.33E+00	3.33E+00	0.00E-01
TC101	7.13E+00	7.13E+00	7.13E+00	7.13E+00	7.13E+00	7.13E+00	7.13E+00	0.00E-01

DOSE TRANSFER FACTORS FOR RADIONUCLIDES IN EFFLUENT WATER

AGE = CHILD
PATHWAY = SWIMMING

	TOTAL BODY	GI-LLI	BONE	LIVER	KIDNEY	THYROID	LUNG	SKIN
				(mrem gal)/(Ci min)				
RU103	1.25E+01	1.25E+01	1.25E+01	1.25E+01	1.25E+01	1.25E+01	1.25E+01	0.00E-01
RU105	1.66E+01	1.66E+01	1.66E+01	1.66E+01	1.66E+01	1.66E+01	1.66E+01	0.00E-01
RU106	5.34E+00	5.34E+00	5.34E+00	5.34E+00	5.34E+00	5.34E+00	5.34E+00	0.00E-01
AG110M	6.88E+01	6.88E+01	6.88E+01	6.88E+01	6.88E+01	6.88E+01	6.88E+01	0.00E-01
TE125M	5.18E-02	5.18E-02	5.18E-02	5.18E-02	5.18E-02	5.18E-02	5.18E-02	0.00E-01
TE127M	3.65E-03	3.65E-03	3.65E-03	3.65E-03	3.65E-03	3.65E-03	3.65E-03	0.00E-01
TE127	3.91E-02	3.91E-02	3.91E-02	3.91E-02	3.91E-02	3.91E-02	3.91E-02	0.00E-01
TE129M	2.95E+00	2.95E+00	2.95E+00	2.95E+00	2.95E+00	2.95E+00	2.95E+00	0.00E-01
TE129	2.52E+00	2.52E+00	2.52E+00	2.52E+00	2.52E+00	2.52E+00	2.52E+00	0.00E-01
TE131M	3.08E+01	3.08E+01	3.08E+01	3.08E+01	3.08E+01	3.08E+01	3.08E+01	0.00E-01
TE131	8.81E+00	8.81E+00	8.81E+00	8.81E+00	8.81E+00	8.81E+00	8.81E+00	0.00E-01
TE132	5.61E+00	5.61E+00	5.61E+00	5.61E+00	5.61E+00	5.61E+00	5.61E+00	0.00E-01
I 130	5.45E+01	5.45E+01	5.45E+01	5.45E+01	5.45E+01	5.45E+01	5.45E+01	0.00E-01
I 131	1.10E+01	1.10E+01	1.10E+01	1.10E+01	1.10E+01	1.10E+01	1.10E+01	0.00E-01
I 132	6.00E+01	6.00E+01	6.00E+01	6.00E+01	6.00E+01	6.00E+01	6.00E+01	0.00E-01
I 133	1.34E+01	1.34E+01	1.34E+01	1.34E+01	1.34E+01	1.34E+01	1.34E+01	0.00E-01
I 134	5.45E+01	5.45E+01	5.45E+01	5.45E+01	5.45E+01	5.45E+01	5.45E+01	0.00E-01
I 135	4.59E+01	4.59E+01	4.59E+01	4.59E+01	4.59E+01	4.59E+01	4.59E+01	0.00E-01
CS134	4.07E+01	4.07E+01	4.07E+01	4.07E+01	4.07E+01	4.07E+01	4.07E+01	0.00E-01
CS136	5.76E+01	5.76E+01	5.76E+01	5.76E+01	5.76E+01	5.76E+01	5.76E+01	0.00E-01
CS137	1.41E+01	1.41E+01	1.41E+01	1.41E+01	1.41E+01	1.41E+01	1.41E+01	0.00E-01
CS138	4.94E+01	4.94E+01	4.94E+01	4.94E+01	4.94E+01	4.94E+01	4.94E+01	0.00E-01
BA139	1.03E+00	1.03E+00	1.03E+00	1.03E+00	1.03E+00	1.03E+00	1.03E+00	0.00E-01
BA140	6.88E+00	6.88E+00	6.88E+00	6.88E+00	6.88E+00	6.88E+00	6.88E+00	0.00E-01
BA141	1.23E+01	1.23E+01	1.23E+01	1.23E+01	1.23E+01	1.23E+01	1.23E+01	0.00E-01
BA142	2.10E+01	2.10E+01	2.10E+01	2.10E+01	2.10E+01	2.10E+01	2.10E+01	0.00E-01
LA140	5.75E+01	5.75E+01	5.75E+01	5.75E+01	5.75E+01	5.75E+01	5.75E+01	0.00E-01
LA142	6.04E+01	6.04E+01	6.04E+01	6.04E+01	6.04E+01	6.04E+01	6.04E+01	0.00E-01
CE141	1.83E+00	1.83E+00	1.83E+00	1.83E+00	1.83E+00	1.83E+00	1.83E+00	0.00E-01
CE143	7.99E+00	7.99E+00	7.99E+00	7.99E+00	7.99E+00	7.99E+00	7.99E+00	0.00E-01
CE144	1.21E+00	1.21E+00	1.21E+00	1.21E+00	1.21E+00	1.21E+00	1.21E+00	0.00E-01
PR143	2.25E-02	2.25E-02	2.25E-02	2.25E-02	2.25E-02	2.25E-02	2.25E-02	0.00E-01
PR144	6.18E-01	6.18E-01	6.18E-01	6.18E-01	6.18E-01	6.18E-01	6.18E-01	0.00E-01
ND147	3.93E+00	3.93E+00	3.93E+00	3.93E+00	3.93E+00	3.93E+00	3.93E+00	0.00E-01
W 187	1.16E+01	1.16E+01	1.16E+01	1.16E+01	1.16E+01	1.16E+01	1.16E+01	0.00E-01
NP239	3.37E+00	3.37E+00	3.37E+00	3.37E+00	3.37E+00	3.37E+00	3.37E+00	0.00E-01

DOSE TRANSFER FACTORS FOR RADIONUCLIDES IN EFFLUENT WATER

AGE = CHILD
PATHWAY = BOATING

	TOTAL BODY	GI-LLI	BONE	LIVER	KIDNEY	THYROID	LUNG	SKIN
				(mrem gal)/(Ci min)				
H 3	0.00E-01	0.00E-01	0.00E-01	0.00E-01	0.00E-01	0.00E-01	0.00E-01	0.00E-01
C 14	0.00E-01	0.00E-01	0.00E-01	0.00E-01	0.00E-01	0.00E-01	0.00E-01	0.00E-01
NA 24	1.01E+02	1.01E+02	1.01E+02	1.01E+02	1.01E+02	1.01E+02	1.01E+02	0.00E-01
P 32	8.35E-02	8.35E-02	8.35E-02	8.35E-02	8.35E-02	8.35E-02	8.35E-02	0.00E-01
CR 51	6.78E-01	6.78E-01	6.78E-01	6.78E-01	6.78E-01	6.78E-01	6.78E-01	0.00E-01
MN 54	1.96E+01	1.96E+01	1.96E+01	1.96E+01	1.96E+01	1.96E+01	1.96E+01	0.00E-01
MN 56	4.06E+01	4.06E+01	4.06E+01	4.06E+01	4.06E+01	4.06E+01	4.06E+01	0.00E-01
FE 55	8.35E-04	8.35E-04	8.35E-04	8.35E-04	8.35E-04	8.35E-04	8.35E-04	0.00E-01
FE 59	2.87E+01	2.87E+01	2.87E+01	2.87E+01	2.87E+01	2.87E+01	2.87E+01	0.00E-01
CO 58	2.35E+01	2.35E+01	2.35E+01	2.35E+01	2.35E+01	2.35E+01	2.35E+01	0.00E-01
CO 60	6.00E+01	6.00E+01	6.00E+01	6.00E+01	6.00E+01	6.00E+01	6.00E+01	0.00E-01
NI 63	0.00E-01	0.00E-01	0.00E-01	0.00E-01	0.00E-01	0.00E-01	0.00E-01	0.00E-01
NI 65	1.27E+01	1.27E+01	1.27E+01	1.27E+01	1.27E+01	1.27E+01	1.27E+01	0.00E-01
CU 64	4.80E+00	4.80E+00	4.80E+00	4.80E+00	4.80E+00	4.80E+00	4.80E+00	0.00E-01
ZN 65	1.44E+01	1.44E+01	1.44E+01	1.44E+01	1.44E+01	1.44E+01	1.44E+01	0.00E-01
ZN 69	1.94E-02	1.94E-02	1.94E-02	1.94E-02	1.94E-02	1.94E-02	1.94E-02	0.00E-01
BR 83	2.15E-01	2.15E-01	2.15E-01	2.15E-01	2.15E-01	2.15E-01	2.15E-01	0.00E-01
BR 84	4.01E+01	4.01E+01	4.01E+01	4.01E+01	4.01E+01	4.01E+01	4.01E+01	0.00E-01
BR 85	4.28E-02	4.28E-02	4.28E-02	4.28E-02	4.28E-02	4.28E-02	4.28E-02	0.00E-01
RB 86	2.22E+00	2.22E+00	2.22E+00	2.22E+00	2.22E+00	2.22E+00	2.22E+00	0.00E-01
RB 88	1.24E+01	1.24E+01	1.24E+01	1.24E+01	1.24E+01	1.24E+01	1.24E+01	0.00E-01
RB 89	4.47E+01	4.47E+01	4.47E+01	4.47E+01	4.47E+01	4.47E+01	4.47E+01	0.00E-01
SR 89	6.00E-02	6.00E-02	6.00E-02	6.00E-02	6.00E-02	6.00E-02	6.00E-02	0.00E-01
SR 90	7.04E-03	7.04E-03	7.04E-03	7.04E-03	7.04E-03	7.04E-03	7.04E-03	0.00E-01
SR 91	2.46E+01	2.46E+01	2.46E+01	2.46E+01	2.46E+01	2.46E+01	2.46E+01	0.00E-01
SR 92	3.31E+01	3.31E+01	3.31E+01	3.31E+01	3.31E+01	3.31E+01	3.31E+01	0.00E-01
Y 90	1.69E-01	1.69E-01	1.69E-01	1.69E-01	1.69E-01	1.69E-01	1.69E-01	0.00E-01
Y 91M	1.20E+01	1.20E+01	1.20E+01	1.20E+01	1.20E+01	1.20E+01	1.20E+01	0.00E-01
Y 91	8.74E-02	8.74E-02	8.74E-02	8.74E-02	8.74E-02	8.74E-02	8.74E-02	0.00E-01
Y 92	5.89E+00	5.89E+00	5.89E+00	5.89E+00	5.89E+00	5.89E+00	5.89E+00	0.00E-01
Y 93	2.46E+00	2.46E+00	2.46E+00	2.46E+00	2.46E+00	2.46E+00	2.46E+00	0.00E-01
ZR 95	1.96E+01	1.96E+01	1.96E+01	1.96E+01	1.96E+01	1.96E+01	1.96E+01	0.00E-01
ZR 97	1.95E+01	1.95E+01	1.95E+01	1.95E+01	1.95E+01	1.95E+01	1.95E+01	0.00E-01
NB 95	1.83E+01	1.83E+01	1.83E+01	1.83E+01	1.83E+01	1.83E+01	1.83E+01	0.00E-01
MO 99	6.12E+00	6.12E+00	6.12E+00	6.12E+00	6.12E+00	6.12E+00	6.12E+00	0.00E-01
TC 99M	3.10E+00	3.10E+00	3.10E+00	3.10E+00	3.10E+00	3.10E+00	3.10E+00	0.00E-01
TC101	6.62E+00	6.62E+00	6.62E+00	6.62E+00	6.62E+00	6.62E+00	6.62E+00	0.00E-01

DOSE TRANSFER FACTORS FOR RADIONUCLIDES IN EFFLUENT WATER

AGE = CHILD
PATHWAY = BOATING

	TOTAL BODY	GI-LLI	BONE	LIVER	KIDNEY	THYROID	LUNG	SKIN
				(mrem gal)/(Ci min)				
RU103	1.16E+01	1.16E+01	1.16E+01	1.16E+01	1.16E+01	1.16E+01	1.16E+01	0.00E-01
RU105	1.54E+01	1.54E+01	1.54E+01	1.54E+01	1.54E+01	1.54E+01	1.54E+01	0.00E-01
RU106	4.96E+00	4.96E+00	4.96E+00	4.96E+00	4.96E+00	4.96E+00	4.96E+00	0.00E-01
AG110M	6.39E+01	6.39E+01	6.39E+01	6.39E+01	6.39E+01	6.39E+01	6.39E+01	0.00E-01
TE125M	4.81E-02	4.81E-02	4.81E-02	4.81E-02	4.81E-02	4.81E-02	4.81E-02	0.00E-01
TE127M	3.39E-03	3.39E-03	3.39E-03	3.39E-03	3.39E-03	3.39E-03	3.39E-03	0.00E-01
TE127	3.63E-02	3.63E-02	3.63E-02	3.63E-02	3.63E-02	3.63E-02	3.63E-02	0.00E-01
TE129M	2.74E+00	2.74E+00	2.74E+00	2.74E+00	2.74E+00	2.74E+00	2.74E+00	0.00E-01
TE129	2.34E+00	2.34E+00	2.34E+00	2.34E+00	2.34E+00	2.34E+00	2.34E+00	0.00E-01
TE131M	2.86E+01	2.86E+01	2.86E+01	2.86E+01	2.86E+01	2.86E+01	2.86E+01	0.00E-01
TE131	8.18E+00	8.18E+00	8.18E+00	8.18E+00	8.18E+00	8.18E+00	8.18E+00	0.00E-01
TE132	5.21E+00	5.21E+00	5.21E+00	5.21E+00	5.21E+00	5.21E+00	5.21E+00	0.00E-01
I 130	5.06E+01	5.06E+01	5.06E+01	5.06E+01	5.06E+01	5.06E+01	5.06E+01	0.00E-01
I 131	1.02E+01	1.02E+01	1.02E+01	1.02E+01	1.02E+01	1.02E+01	1.02E+01	0.00E-01
I 132	5.57E+01	5.57E+01	5.57E+01	5.57E+01	5.57E+01	5.57E+01	5.57E+01	0.00E-01
I 133	1.25E+01	1.25E+01	1.25E+01	1.25E+01	1.25E+01	1.25E+01	1.25E+01	0.00E-01
I 134	5.06E+01	5.06E+01	5.06E+01	5.06E+01	5.06E+01	5.06E+01	5.06E+01	0.00E-01
I 135	4.26E+01	4.26E+01	4.26E+01	4.26E+01	4.26E+01	4.26E+01	4.26E+01	0.00E-01
CS134	3.78E+01	3.78E+01	3.78E+01	3.78E+01	3.78E+01	3.78E+01	3.78E+01	0.00E-01
CS136	5.35E+01	5.35E+01	5.35E+01	5.35E+01	5.35E+01	5.35E+01	5.35E+01	0.00E-01
CS137	1.31E+01	1.31E+01	1.31E+01	1.31E+01	1.31E+01	1.31E+01	1.31E+01	0.00E-01
CS138	4.59E+01	4.59E+01	4.59E+01	4.59E+01	4.59E+01	4.59E+01	4.59E+01	0.00E-01
BA139	9.55E-01	9.55E-01	9.55E-01	9.55E-01	9.55E-01	9.55E-01	9.55E-01	0.00E-01
BA140	6.39E+00	6.39E+00	6.39E+00	6.39E+00	6.39E+00	6.39E+00	6.39E+00	0.00E-01
BA141	1.14E+01	1.14E+01	1.14E+01	1.14E+01	1.14E+01	1.14E+01	1.14E+01	0.00E-01
BA142	1.95E+01	1.95E+01	1.95E+01	1.95E+01	1.95E+01	1.95E+01	1.95E+01	0.00E-01
LA140	5.34E+01	5.34E+01	5.34E+01	5.34E+01	5.34E+01	5.34E+01	5.34E+01	0.00E-01
LA142	5.61E+01	5.61E+01	5.61E+01	5.61E+01	5.61E+01	5.61E+01	5.61E+01	0.00E-01
CE141	1.70E+00	1.70E+00	1.70E+00	1.70E+00	1.70E+00	1.70E+00	1.70E+00	0.00E-01
CE143	7.42E+00	7.42E+00	7.42E+00	7.42E+00	7.42E+00	7.42E+00	7.42E+00	0.00E-01
CE144	1.12E+00	1.12E+00	1.12E+00	1.12E+00	1.12E+00	1.12E+00	1.12E+00	0.00E-01
PR143	2.09E-02	2.09E-02	2.09E-02	2.09E-02	2.09E-02	2.09E-02	2.09E-02	0.00E-01
PR144	5.74E-01	5.74E-01	5.74E-01	5.74E-01	5.74E-01	5.74E-01	5.74E-01	0.00E-01
ND147	3.65E+00	3.65E+00	3.65E+00	3.65E+00	3.65E+00	3.65E+00	3.65E+00	0.00E-01
W 187	1.08E+01	1.08E+01	1.08E+01	1.08E+01	1.08E+01	1.08E+01	1.08E+01	0.00E-01
NP239	3.13E+00	3.13E+00	3.13E+00	3.13E+00	3.13E+00	3.13E+00	3.13E+00	0.00E-01

DOSE TRANSFER FACTORS FOR RADIONUCLIDES IN EFFLUENT WATER

AGE = INFANT
PATHWAY = POTABLE WATER

	TOTAL BODY	GI-LLI	BONE	LIVER	KIDNEY	THYROID	LUNG	SKIN
				(mrem gal)/(Ci min)				
H 3	2.91E+01	2.91E+01	0.00E-01	2.91E+01	2.91E+01	2.91E+01	2.91E+01	0.00E-01
C 14	8.38E+02	8.38E+02	3.92E+03	8.38E+02	8.38E+02	8.38E+02	8.38E+02	0.00E-01
NA 24	5.53E+02	5.53E+02	5.53E+02	5.53E+02	5.53E+02	5.53E+02	5.53E+02	0.00E-01
P 32	1.04E+04	3.63E+03	2.68E+05	1.58E+04	0.00E-01	0.00E-01	0.00E-01	0.00E-01
CR 51	2.28E+00	6.64E+01	0.00E-01	0.00E-01	3.25E-01	1.49E+00	2.89E+00	0.00E-01
MN 54	7.45E+02	1.21E+03	0.00E-01	3.29E+03	7.29E+02	0.00E-01	0.00E-01	0.00E-01
MN 56	3.58E-02	1.89E+01	0.00E-01	2.08E-01	1.79E-01	0.00E-01	0.00E-01	0.00E-01
FE 55	3.97E+02	1.89E+02	2.30E+03	1.49E+03	0.00E-01	0.00E-01	7.26E+02	0.00E-01
FE 59	3.46E+03	4.19E+03	5.02E+03	8.77E+03	0.00E-01	0.00E-01	2.59E+03	0.00E-01
CO 58	1.47E+03	1.47E+03	0.00E-01	5.90E+02	0.00E-01	0.00E-01	0.00E-01	0.00E-01
CO 60	4.22E+03	4.25E+03	0.00E-01	1.79E+03	0.00E-01	0.00E-01	0.00E-01	0.00E-01
NI 63	3.64E+03	3.23E+02	1.05E+05	6.49E+03	0.00E-01	0.00E-01	0.00E-01	0.00E-01
NI 65	5.45E-02	9.11E+00	1.06E+00	1.20E-01	0.00E-01	0.00E-01	0.00E-01	0.00E-01
CU 64	1.26E+01	5.57E+02	0.00E-01	2.71E+01	4.59E+01	0.00E-01	0.00E-01	0.00E-01
ZN 65	4.80E+03	8.80E+03	3.04E+03	1.04E+04	5.05E+03	0.00E-01	0.00E-01	0.00E-01
ZN 69	5.00E-08	5.48E-05	3.73E-07	6.72E-07	2.79E-07	0.00E-01	0.00E-01	0.00E-01
BR 83	5.73E-02	0.00E-01	0.00E-01	0.00E-01	0.00E-01	0.00E-01	0.00E-01	0.00E-01
BR 84	0.00E-01	0.00E-01	0.00E-01	0.00E-01	0.00E-01	0.00E-01	0.00E-01	0.00E-01
BR 85	0.00E-01	0.00E-01	0.00E-01	0.00E-01	0.00E-01	0.00E-01	0.00E-01	0.00E-01
RB 86	1.34E+04	6.94E+02	0.00E-01	2.71E+04	0.00E-01	0.00E-01	0.00E-01	0.00E-01
RB 88	0.00E-01	0.00E-01	0.00E-01	0.00E-01	0.00E-01	0.00E-01	0.00E-01	0.00E-01
RB 89	0.00E-01	0.00E-01	0.00E-01	0.00E-01	0.00E-01	0.00E-01	0.00E-01	0.00E-01
SR 89	1.18E+04	8.43E+03	4.10E+05	0.00E-01	0.00E-01	0.00E-01	0.00E-01	0.00E-01
SR 90	9.50E+04	3.82E+04	4.69E+06	0.00E-01	0.00E-01	0.00E-01	0.00E-01	0.00E-01
SR 91	5.19E+01	1.70E+03	1.43E+03	0.00E-01	0.00E-01	0.00E-01	0.00E-01	0.00E-01
SR 92	2.56E-01	7.43E+01	6.89E+00	0.00E-01	0.00E-01	0.00E-01	0.00E-01	0.00E-01
Y 90	2.98E-01	1.53E+04	1.11E+01	0.00E-01	0.00E-01	0.00E-01	0.00E-01	0.00E-01
Y 91M	0.00E-01	0.00E-01	0.00E-01	0.00E-01	0.00E-01	0.00E-01	0.00E-01	0.00E-01
Y 91	4.93E+00	1.33E+04	1.85E+02	0.00E-01	0.00E-01	0.00E-01	0.00E-01	0.00E-01
Y 92	3.29E-04	2.24E+02	1.17E-02	0.00E-01	0.00E-01	0.00E-01	0.00E-01	0.00E-01
Y 93	2.11E-02	6.10E+03	7.73E-01	0.00E-01	0.00E-01	0.00E-01	0.00E-01	0.00E-01
ZR 95	5.83E+00	4.09E+03	3.37E+01	8.22E+00	8.86E+00	0.00E-01	0.00E-01	0.00E-01
ZR 97	7.17E-02	1.00E+04	9.15E-01	1.57E-01	1.58E-01	0.00E-01	0.00E-01	0.00E-01
NB 95	1.62E+00	2.37E+03	6.82E+00	2.81E+00	2.01E+00	0.00E-01	0.00E-01	0.00E-01
MO 99	8.53E+02	1.44E+03	0.00E-01	4.37E+03	6.54E+03	0.00E-01	0.00E-01	0.00E-01
TC 99M	5.32E-01	1.20E+01	2.00E-02	4.13E-02	4.44E-01	0.00E-01	2.16E-02	0.00E-01
TC101	0.00E-01	0.00E-01	0.00E-01	0.00E-01	0.00E-01	0.00E-01	0.00E-01	0.00E-01

DOSE TRANSFER FACTORS FOR RADIONUCLIDES IN EFFLUENT WATER

AGE = INFANT
PATHWAY = POTABLE WATER

	TOTAL BODY	GI-LLI	BONE	LIVER	KIDNEY	THYROID	LUNG	SKIN
				(mrem gal)/(Ci min)				
RU103	8.05E+01	2.93E+03	2.41E+02	0.00E-01	5.01E+02	0.00E-01	0.00E-01	0.00E-01
RU105	1.78E-01	2.11E+02	5.30E-01	0.00E-01	3.89E+00	0.00E-01	0.00E-01	0.00E-01
RU106	4.97E+02	3.02E+04	3.98E+03	0.00E-01	4.71E+03	0.00E-01	0.00E-01	0.00E-01
AG110M	7.94E+01	6.23E+03	1.64E+02	1.20E+02	1.72E+02	0.00E-01	0.00E-01	0.00E-01
TE125M	5.15E+02	1.82E+03	3.81E+03	1.27E+03	0.00E-01	1.28E+03	0.00E-01	0.00E-01
TE127M	1.16E+03	3.88E+03	9.63E+03	3.19E+03	2.37E+04	2.78E+03	0.00E-01	0.00E-01
TE127	6.01E+00	5.86E+02	2.79E+01	9.36E+00	6.82E+01	2.27E+01	0.00E-01	0.00E-01
TE129M	2.50E+03	9.68E+03	1.62E+04	5.56E+03	4.05E+04	6.23E+03	0.00E-01	0.00E-01
TE129	6.48E-06	2.22E-03	2.78E-05	9.57E-06	6.91E-05	2.33E-05	0.00E-01	0.00E-01
TE131M	4.80E+02	9.79E+03	1.44E+03	5.82E+02	4.00E+03	1.18E+03	0.00E-01	0.00E-01
TE131	0.00E-01	0.00E-01	0.00E-01	0.00E-01	0.00E-01	0.00E-01	0.00E-01	0.00E-01
TE132	1.29E+03	5.10E+03	2.78E+03	1.38E+03	8.62E+03	2.03E+03	0.00E-01	0.00E-01
I 130	2.28E+02	1.22E+02	2.58E+02	5.68E+02	6.24E+02	6.37E+04	0.00E-01	0.00E-01
I 131	2.83E+03	2.29E+02	5.45E+03	6.43E+03	7.50E+03	2.11E+06	0.00E-01	0.00E-01
I 132	1.44E-01	3.27E-01	1.99E-01	4.04E-01	4.50E-01	1.89E+01	0.00E-01	0.00E-01
I 133	3.97E+02	2.29E+02	9.31E+02	1.35E+03	1.59E+03	2.46E+05	0.00E-01	0.00E-01
I 134	5.83E-07	1.69E-06	8.00E-07	1.64E-06	1.83E-06	3.82E-05	0.00E-01	0.00E-01
I 135	3.51E+01	3.48E+01	4.84E+01	9.62E+01	1.07E+02	8.62E+03	0.00E-01	0.00E-01
CS134	1.17E+04	3.16E+02	6.24E+04	1.16E+05	2.99E+04	0.00E-01	1.23E+04	0.00E-01
CS136	7.92E+03	3.22E+02	7.21E+03	2.12E+04	8.45E+03	0.00E-01	1.73E+03	0.00E-01
CS137	7.17E+03	3.16E+02	8.64E+04	1.01E+05	2.72E+04	0.00E-01	1.10E+04	0.00E-01
CS138	0.00E-01	0.00E-01	0.00E-01	0.00E-01	0.00E-01	0.00E-01	0.00E-01	0.00E-01
BA139	2.36E-05	5.16E-02	8.14E-04	5.40E-07	3.24E-07	0.00E-01	3.27E-07	0.00E-01
BA140	1.38E+03	6.59E+03	2.68E+04	2.68E+01	6.37E+00	0.00E-01	1.65E+01	0.00E-01
BA141	0.00E-01	0.00E-01	0.00E-01	0.00E-01	0.00E-01	0.00E-01	0.00E-01	0.00E-01
BA142	0.00E-01	0.00E-01	0.00E-01	0.00E-01	0.00E-01	0.00E-01	0.00E-01	0.00E-01
LA140	2.35E-01	1.07E+04	2.31E+00	9.12E-01	0.00E-01	0.00E-01	0.00E-01	0.00E-01
LA142	3.27E-07	2.32E-01	3.72E-06	1.37E-06	0.00E-01	0.00E-01	0.00E-01	0.00E-01
CE141	9.16E-01	4.02E+03	1.28E+01	7.78E+00	2.40E+00	0.00E-01	0.00E-01	0.00E-01
CE143	1.12E-01	5.74E+03	1.48E+00	9.84E+02	2.87E-01	0.00E-01	0.00E-01	0.00E-01
CE144	2.76E+01	2.82E+04	4.92E+02	2.01E+02	8.14E+01	0.00E-01	0.00E-01	0.00E-01
PR143	6.34E-01	6.75E+03	1.28E+01	4.78E+00	1.78E+00	0.00E-01	0.00E-01	0.00E-01
PR144	0.00E-01	0.00E-01	0.00E-01	0.00E-01	0.00E-01	0.00E-01	0.00E-01	0.00E-01
ND147	5.41E-01	5.60E+03	8.60E+00	8.84E+00	3.41E+00	0.00E-01	0.00E-01	0.00E-01
W 187	1.79E+01	3.05E+03	7.46E+01	5.19E+01	0.00E-01	0.00E-01	0.00E-01	0.00E-01
NP239	6.93E-02	3.54E+03	1.37E+00	1.23E-01	2.44E-01	0.00E-01	0.00E-01	0.00E-01

DOSE TRANSFER FACTORS FOR RADIONUCLIDES IN EFFLUENT WATER

AGE = INFANT
PATHWAY = FRESH WATER FISH

	TOTAL BODY	GI-LLI	BONE	LIVER	KIDNEY	THYROID	LUNG	SKIN
				(mrem gal)/(Ci min)				
H 3	0.00E-01	0.00E-01	0.00E-01	0.00E-01	0.00E-01	0.00E-01	0.00E-01	0.00E-01
C 14	0.00E-01	0.00E-01	0.00E-01	0.00E-01	0.00E-01	0.00E-01	0.00E-01	0.00E-01
NA 24	0.00E-01	0.00E-01	0.00E-01	0.00E-01	0.00E-01	0.00E-01	0.00E-01	0.00E-01
P 32	0.00E-01	0.00E-01	0.00E-01	0.00E-01	0.00E-01	0.00E-01	0.00E-01	0.00E-01
CR 51	0.00E-01	0.00E-01	0.00E-01	0.00E-01	0.00E-01	0.00E-01	0.00E-01	0.00E-01
MN 54	0.00E-01	0.00E-01	0.00E-01	0.00E-01	0.00E-01	0.00E-01	0.00E-01	0.00E-01
MN 56	0.00E-01	0.00E-01	0.00E-01	0.00E-01	0.00E-01	0.00E-01	0.00E-01	0.00E-01
FE 55	0.00E-01	0.00E-01	0.00E-01	0.00E-01	0.00E-01	0.00E-01	0.00E-01	0.00E-01
FE 59	0.00E-01	0.00E-01	0.00E-01	0.00E-01	0.00E-01	0.00E-01	0.00E-01	0.00E-01
CO 58	0.00E-01	0.00E-01	0.00E-01	0.00E-01	0.00E-01	0.00E-01	0.00E-01	0.00E-01
CO 60	0.00E-01	0.00E-01	0.00E-01	0.00E-01	0.00E-01	0.00E-01	0.00E-01	0.00E-01
NI 63	0.00E-01	0.00E-01	0.00E-01	0.00E-01	0.00E-01	0.00E-01	0.00E-01	0.00E-01
NI 65	0.00E-01	0.00E-01	0.00E-01	0.00E-01	0.00E-01	0.00E-01	0.00E-01	0.00E-01
CU 64	0.00E-01	0.00E-01	0.00E-01	0.00E-01	0.00E-01	0.00E-01	0.00E-01	0.00E-01
ZN 65	0.00E-01	0.00E-01	0.00E-01	0.00E-01	0.00E-01	0.00E-01	0.00E-01	0.00E-01
ZN 69	0.00E-01	0.00E-01	0.00E-01	0.00E-01	0.00E-01	0.00E-01	0.00E-01	0.00E-01
BR 83	0.00E-01	0.00E-01	0.00E-01	0.00E-01	0.00E-01	0.00E-01	0.00E-01	0.00E-01
BR 84	0.00E-01	0.00E-01	0.00E-01	0.00E-01	0.00E-01	0.00E-01	0.00E-01	0.00E-01
BR 85	0.00E-01	0.00E-01	0.00E-01	0.00E-01	0.00E-01	0.00E-01	0.00E-01	0.00E-01
RB 86	0.00E-01	0.00E-01	0.00E-01	0.00E-01	0.00E-01	0.00E-01	0.00E-01	0.00E-01
RB 88	0.00E-01	0.00E-01	0.00E-01	0.00E-01	0.00E-01	0.00E-01	0.00E-01	0.00E-01
RB 89	0.00E-01	0.00E-01	0.00E-01	0.00E-01	0.00E-01	0.00E-01	0.00E-01	0.00E-01
SR 89	0.00E-01	0.00E-01	0.00E-01	0.00E-01	0.00E-01	0.00E-01	0.00E-01	0.00E-01
SR 90	0.00E-01	0.00E-01	0.00E-01	0.00E-01	0.00E-01	0.00E-01	0.00E-01	0.00E-01
SR 91	0.00E-01	0.00E-01	0.00E-01	0.00E-01	0.00E-01	0.00E-01	0.00E-01	0.00E-01
SR 92	0.00E-01	0.00E-01	0.00E-01	0.00E-01	0.00E-01	0.00E-01	0.00E-01	0.00E-01
Y 90	0.00E-01	0.00E-01	0.00E-01	0.00E-01	0.00E-01	0.00E-01	0.00E-01	0.00E-01
Y 91M	0.00E-01	0.00E-01	0.00E-01	0.00E-01	0.00E-01	0.00E-01	0.00E-01	0.00E-01
Y 91	0.00E-01	0.00E-01	0.00E-01	0.00E-01	0.00E-01	0.00E-01	0.00E-01	0.00E-01
Y 92	0.00E-01	0.00E-01	0.00E-01	0.00E-01	0.00E-01	0.00E-01	0.00E-01	0.00E-01
Y 93	0.00E-01	0.00E-01	0.00E-01	0.00E-01	0.00E-01	0.00E-01	0.00E-01	0.00E-01
ZR 95	0.00E-01	0.00E-01	0.00E-01	0.00E-01	0.00E-01	0.00E-01	0.00E-01	0.00E-01
ZR 97	0.00E-01	0.00E-01	0.00E-01	0.00E-01	0.00E-01	0.00E-01	0.00E-01	0.00E-01
NB 95	0.00E-01	0.00E-01	0.00E-01	0.00E-01	0.00E-01	0.00E-01	0.00E-01	0.00E-01
MO 99	0.00E-01	0.00E-01	0.00E-01	0.00E-01	0.00E-01	0.00E-01	0.00E-01	0.00E-01
TC 99M	0.00E-01	0.00E-01	0.00E-01	0.00E-01	0.00E-01	0.00E-01	0.00E-01	0.00E-01
TC101	0.00E-01	0.00E-01	0.00E-01	0.00E-01	0.00E-01	0.00E-01	0.00E-01	0.00E-01

DOSE TRANSFER FACTORS FOR RADIONUCLIDES IN EFFLUENT WATER

AGE = INFANT
PATHWAY = FRESH WATER FISH

	TOTAL BODY	GI-LLI	BONE	LIVER	KIDNEY	THYROID	LUNG	SKIN
				(mrem gal)/(Ci min)				
RU103	0.00E-01	0.00E-01	0.00E-01	0.00E-01	0.00E-01	0.00E-01	0.00E-01	0.00E-01
RU105	0.00E-01	0.00E-01	0.00E-01	0.00E-01	0.00E-01	0.00E-01	0.00E-01	0.00E-01
RU106	0.00E-01	0.00E-01	0.00E-01	0.00E-01	0.00E-01	0.00E-01	0.00E-01	0.00E-01
AG110M	0.00E-01	0.00E-01	0.00E-01	0.00E-01	0.00E-01	0.00E-01	0.00E-01	0.00E-01
TE125M	0.00E-01	0.00E-01	0.00E-01	0.00E-01	0.00E-01	0.00E-01	0.00E-01	0.00E-01
TE127M	0.00E-01	0.00E-01	0.00E-01	0.00E-01	0.00E-01	0.00E-01	0.00E-01	0.00E-01
TE127	0.00E-01	0.00E-01	0.00E-01	0.00E-01	0.00E-01	0.00E-01	0.00E-01	0.00E-01
TE129M	0.00E-01	0.00E-01	0.00E-01	0.00E-01	0.00E-01	0.00E-01	0.00E-01	0.00E-01
TE129	0.00E-01	0.00E-01	0.00E-01	0.00E-01	0.00E-01	0.00E-01	0.00E-01	0.00E-01
TE131M	0.00E-01	0.00E-01	0.00E-01	0.00E-01	0.00E-01	0.00E-01	0.00E-01	0.00E-01
TE131	0.00E-01	0.00E-01	0.00E-01	0.00E-01	0.00E-01	0.00E-01	0.00E-01	0.00E-01
TE132	0.00E-01	0.00E-01	0.00E-01	0.00E-01	0.00E-01	0.00E-01	0.00E-01	0.00E-01
I 130	0.00E-01	0.00E-01	0.00E-01	0.00E-01	0.00E-01	0.00E-01	0.00E-01	0.00E-01
I 131	0.00E-01	0.00E-01	0.00E-01	0.00E-01	0.00E-01	0.00E-01	0.00E-01	0.00E-01
I 132	0.00E-01	0.00E-01	0.00E-01	0.00E-01	0.00E-01	0.00E-01	0.00E-01	0.00E-01
I 133	0.00E-01	0.00E-01	0.00E-01	0.00E-01	0.00E-01	0.00E-01	0.00E-01	0.00E-01
I 134	0.00E-01	0.00E-01	0.00E-01	0.00E-01	0.00E-01	0.00E-01	0.00E-01	0.00E-01
I 135	0.00E-01	0.00E-01	0.00E-01	0.00E-01	0.00E-01	0.00E-01	0.00E-01	0.00E-01
CS134	0.00E-01	0.00E-01	0.00E-01	0.00E-01	0.00E-01	0.00E-01	0.00E-01	0.00E-01
CS136	0.00E-01	0.00E-01	0.00E-01	0.00E-01	0.00E-01	0.00E-01	0.00E-01	0.00E-01
CS137	0.00E-01	0.00E-01	0.00E-01	0.00E-01	0.00E-01	0.00E-01	0.00E-01	0.00E-01
CS138	0.00E-01	0.00E-01	0.00E-01	0.00E-01	0.00E-01	0.00E-01	0.00E-01	0.00E-01
BA139	0.00E-01	0.00E-01	0.00E-01	0.00E-01	0.00E-01	0.00E-01	0.00E-01	0.00E-01
BA140	0.00E-01	0.00E-01	0.00E-01	0.00E-01	0.00E-01	0.00E-01	0.00E-01	0.00E-01
BA141	0.00E-01	0.00E-01	0.00E-01	0.00E-01	0.00E-01	0.00E-01	0.00E-01	0.00E-01
BA142	0.00E-01	0.00E-01	0.00E-01	0.00E-01	0.00E-01	0.00E-01	0.00E-01	0.00E-01
LA140	0.00E-01	0.00E-01	0.00E-01	0.00E-01	0.00E-01	0.00E-01	0.00E-01	0.00E-01
LA142	0.00E-01	0.00E-01	0.00E-01	0.00E-01	0.00E-01	0.00E-01	0.00E-01	0.00E-01
CE141	0.00E-01	0.00E-01	0.00E-01	0.00E-01	0.00E-01	0.00E-01	0.00E-01	0.00E-01
CE143	0.00E-01	0.00E-01	0.00E-01	0.00E-01	0.00E-01	0.00E-01	0.00E-01	0.00E-01
CE144	0.00E-01	0.00E-01	0.00E-01	0.00E-01	0.00E-01	0.00E-01	0.00E-01	0.00E-01
PR143	0.00E-01	0.00E-01	0.00E-01	0.00E-01	0.00E-01	0.00E-01	0.00E-01	0.00E-01
PR144	0.00E-01	0.00E-01	0.00E-01	0.00E-01	0.00E-01	0.00E-01	0.00E-01	0.00E-01
ND147	0.00E-01	0.00E-01	0.00E-01	0.00E-01	0.00E-01	0.00E-01	0.00E-01	0.00E-01
W 187	0.00E-01	0.00E-01	0.00E-01	0.00E-01	0.00E-01	0.00E-01	0.00E-01	0.00E-01
NP239	0.00E-01	0.00E-01	0.00E-01	0.00E-01	0.00E-01	0.00E-01	0.00E-01	0.00E-01

DOSE TRANSFER FACTORS FOR RADIONUCLIDES IN EFFLUENT WATER

AGE = INFANT
PATHWAY = FRESH WATER INVERTEBRATES

	TOTAL BODY	GI-LLI	BONE	LIVER	KIDNEY	THYROID	LUNG	SKIN
				(mrem gal)/(Ci min)				
H 3	0.00E-01	0.00E-01	0.00E-01	0.00E-01	0.00E-01	0.00E-01	0.00E-01	0.00E-01
C 14	0.00E-01	0.00E-01	0.00E-01	0.00E-01	0.00E-01	0.00E-01	0.00E-01	0.00E-01
NA 24	0.00E-01	0.00E-01	0.00E-01	0.00E-01	0.00E-01	0.00E-01	0.00E-01	0.00E-01
P 32	0.00E-01	0.00E-01	0.00E-01	0.00E-01	0.00E-01	0.00E-01	0.00E-01	0.00E-01
CR 51	0.00E-01	0.00E-01	0.00E-01	0.00E-01	0.00E-01	0.00E-01	0.00E-01	0.00E-01
MN 54	0.00E-01	0.00E-01	0.00E-01	0.00E-01	0.00E-01	0.00E-01	0.00E-01	0.00E-01
MN 56	0.00E-01	0.00E-01	0.00E-01	0.00E-01	0.00E-01	0.00E-01	0.00E-01	0.00E-01
FE 55	0.00E-01	0.00E-01	0.00E-01	0.00E-01	0.00E-01	0.00E-01	0.00E-01	0.00E-01
FE 59	0.00E-01	0.00E-01	0.00E-01	0.00E-01	0.00E-01	0.00E-01	0.00E-01	0.00E-01
CO 58	0.00E-01	0.00E-01	0.00E-01	0.00E-01	0.00E-01	0.00E-01	0.00E-01	0.00E-01
CO 60	0.00E-01	0.00E-01	0.00E-01	0.00E-01	0.00E-01	0.00E-01	0.00E-01	0.00E-01
NI 63	0.00E-01	0.00E-01	0.00E-01	0.00E-01	0.00E-01	0.00E-01	0.00E-01	0.00E-01
NI 65	0.00E-01	0.00E-01	0.00E-01	0.00E-01	0.00E-01	0.00E-01	0.00E-01	0.00E-01
CU 64	0.00E-01	0.00E-01	0.00E-01	0.00E-01	0.00E-01	0.00E-01	0.00E-01	0.00E-01
ZN 65	0.00E-01	0.00E-01	0.00E-01	0.00E-01	0.00E-01	0.00E-01	0.00E-01	0.00E-01
ZN 69	0.00E-01	0.00E-01	0.00E-01	0.00E-01	0.00E-01	0.00E-01	0.00E-01	0.00E-01
BR 83	0.00E-01	0.00E-01	0.00E-01	0.00E-01	0.00E-01	0.00E-01	0.00E-01	0.00E-01
BR 84	0.00E-01	0.00E-01	0.00E-01	0.00E-01	0.00E-01	0.00E-01	0.00E-01	0.00E-01
BR 85	0.00E-01	0.00E-01	0.00E-01	0.00E-01	0.00E-01	0.00E-01	0.00E-01	0.00E-01
RB 86	0.00E-01	0.00E-01	0.00E-01	0.00E-01	0.00E-01	0.00E-01	0.00E-01	0.00E-01
RB 88	0.00E-01	0.00E-01	0.00E-01	0.00E-01	0.00E-01	0.00E-01	0.00E-01	0.00E-01
RB 89	0.00E-01	0.00E-01	0.00E-01	0.00E-01	0.00E-01	0.00E-01	0.00E-01	0.00E-01
SR 89	0.00E-01	0.00E-01	0.00E-01	0.00E-01	0.00E-01	0.00E-01	0.00E-01	0.00E-01
SR 90	0.00E-01	0.00E-01	0.00E-01	0.00E-01	0.00E-01	0.00E-01	0.00E-01	0.00E-01
SR 91	0.00E-01	0.00E-01	0.00E-01	0.00E-01	0.00E-01	0.00E-01	0.00E-01	0.00E-01
SR 92	0.00E-01	0.00E-01	0.00E-01	0.00E-01	0.00E-01	0.00E-01	0.00E-01	0.00E-01
Y 90	0.00E-01	0.00E-01	0.00E-01	0.00E-01	0.00E-01	0.00E-01	0.00E-01	0.00E-01
Y 91M	0.00E-01	0.00E-01	0.00E-01	0.00E-01	0.00E-01	0.00E-01	0.00E-01	0.00E-01
Y 91	0.00E-01	0.00E-01	0.00E-01	0.00E-01	0.00E-01	0.00E-01	0.00E-01	0.00E-01
Y 92	0.00E-01	0.00E-01	0.00E-01	0.00E-01	0.00E-01	0.00E-01	0.00E-01	0.00E-01
Y 93	0.00E-01	0.00E-01	0.00E-01	0.00E-01	0.00E-01	0.00E-01	0.00E-01	0.00E-01
ZR 95	0.00E-01	0.00E-01	0.00E-01	0.00E-01	0.00E-01	0.00E-01	0.00E-01	0.00E-01
ZR 97	0.00E-01	0.00E-01	0.00E-01	0.00E-01	0.00E-01	0.00E-01	0.00E-01	0.00E-01
NB 95	0.00E-01	0.00E-01	0.00E-01	0.00E-01	0.00E-01	0.00E-01	0.00E-01	0.00E-01
MO 99	0.00E-01	0.00E-01	0.00E-01	0.00E-01	0.00E-01	0.00E-01	0.00E-01	0.00E-01
TC 99M	0.00E-01	0.00E-01	0.00E-01	0.00E-01	0.00E-01	0.00E-01	0.00E-01	0.00E-01
TC101	0.00E-01	0.00E-01	0.00E-01	0.00E-01	0.00E-01	0.00E-01	0.00E-01	0.00E-01

DOSE TRANSFER FACTORS FOR RADIONUCLIDES IN EFFLUENT WATER

AGE = INFANT
PATHWAY = FRESH WATER INVERTEBRATES

	TOTAL BODY	GI-LLI	BONE	LIVER	KIDNEY	THYROID	LUNG	SKIN
				(mrem gal)/(Ci min)				
RU103	0.00E-01	0.00E-01	0.00E-01	0.00E-01	0.00E-01	0.00E-01	0.00E-01	0.00E-01
RU105	0.00E-01	0.00E-01	0.00E-01	0.00E-01	0.00E-01	0.00E-01	0.00E-01	0.00E-01
RU106	0.00E-01	0.00E-01	0.00E-01	0.00E-01	0.00E-01	0.00E-01	0.00E-01	0.00E-01
AG110M	0.00E-01	0.00E-01	0.00E-01	0.00E-01	0.00E-01	0.00E-01	0.00E-01	0.00E-01
TE125M	0.00E-01	0.00E-01	0.00E-01	0.00E-01	0.00E-01	0.00E-01	0.00E-01	0.00E-01
TE127M	0.00E-01	0.00E-01	0.00E-01	0.00E-01	0.00E-01	0.00E-01	0.00E-01	0.00E-01
TE127	0.00E-01	0.00E-01	0.00E-01	0.00E-01	0.00E-01	0.00E-01	0.00E-01	0.00E-01
TE129M	0.00E-01	0.00E-01	0.00E-01	0.00E-01	0.00E-01	0.00E-01	0.00E-01	0.00E-01
TE129	0.00E-01	0.00E-01	0.00E-01	0.00E-01	0.00E-01	0.00E-01	0.00E-01	0.00E-01
TE131M	0.00E-01	0.00E-01	0.00E-01	0.00E-01	0.00E-01	0.00E-01	0.00E-01	0.00E-01
TE131	0.00E-01	0.00E-01	0.00E-01	0.00E-01	0.00E-01	0.00E-01	0.00E-01	0.00E-01
TE132	0.00E-01	0.00E-01	0.00E-01	0.00E-01	0.00E-01	0.00E-01	0.00E-01	0.00E-01
I 130	0.00E-01	0.00E-01	0.00E-01	0.00E-01	0.00E-01	0.00E-01	0.00E-01	0.00E-01
I 131	0.00E-01	0.00E-01	0.00E-01	0.00E-01	0.00E-01	0.00E-01	0.00E-01	0.00E-01
I 132	0.00E-01	0.00E-01	0.00E-01	0.00E-01	0.00E-01	0.00E-01	0.00E-01	0.00E-01
I 133	0.00E-01	0.00E-01	0.00E-01	0.00E-01	0.00E-01	0.00E-01	0.00E-01	0.00E-01
I 134	0.00E-01	0.00E-01	0.00E-01	0.00E-01	0.00E-01	0.00E-01	0.00E-01	0.00E-01
I 135	0.00E-01	0.00E-01	0.00E-01	0.00E-01	0.00E-01	0.00E-01	0.00E-01	0.00E-01
CS134	0.00E-01	0.00E-01	0.00E-01	0.00E-01	0.00E-01	0.00E-01	0.00E-01	0.00E-01
CS136	0.00E-01	0.00E-01	0.00E-01	0.00E-01	0.00E-01	0.00E-01	0.00E-01	0.00E-01
CS137	0.00E-01	0.00E-01	0.00E-01	0.00E-01	0.00E-01	0.00E-01	0.00E-01	0.00E-01
CS138	0.00E-01	0.00E-01	0.00E-01	0.00E-01	0.00E-01	0.00E-01	0.00E-01	0.00E-01
BA139	0.00E-01	0.00E-01	0.00E-01	0.00E-01	0.00E-01	0.00E-01	0.00E-01	0.00E-01
BA140	0.00E-01	0.00E-01	0.00E-01	0.00E-01	0.00E-01	0.00E-01	0.00E-01	0.00E-01
BA141	0.00E-01	0.00E-01	0.00E-01	0.00E-01	0.00E-01	0.00E-01	0.00E-01	0.00E-01
BA142	0.00E-01	0.00E-01	0.00E-01	0.00E-01	0.00E-01	0.00E-01	0.00E-01	0.00E-01
LA140	0.00E-01	0.00E-01	0.00E-01	0.00E-01	0.00E-01	0.00E-01	0.00E-01	0.00E-01
LA142	0.00E-01	0.00E-01	0.00E-01	0.00E-01	0.00E-01	0.00E-01	0.00E-01	0.00E-01
CE141	0.00E-01	0.00E-01	0.00E-01	0.00E-01	0.00E-01	0.00E-01	0.00E-01	0.00E-01
CE143	0.00E-01	0.00E-01	0.00E-01	0.00E-01	0.00E-01	0.00E-01	0.00E-01	0.00E-01
CE144	0.00E-01	0.00E-01	0.00E-01	0.00E-01	0.00E-01	0.00E-01	0.00E-01	0.00E-01
PR143	0.00E-01	0.00E-01	0.00E-01	0.00E-01	0.00E-01	0.00E-01	0.00E-01	0.00E-01
PR144	0.00E-01	0.00E-01	0.00E-01	0.00E-01	0.00E-01	0.00E-01	0.00E-01	0.00E-01
ND147	0.00E-01	0.00E-01	0.00E-01	0.00E-01	0.00E-01	0.00E-01	0.00E-01	0.00E-01
W 187	0.00E-01	0.00E-01	0.00E-01	0.00E-01	0.00E-01	0.00E-01	0.00E-01	0.00E-01
NP239	0.00E-01	0.00E-01	0.00E-01	0.00E-01	0.00E-01	0.00E-01	0.00E-01	0.00E-01

DOSE TRANSFER FACTORS FOR RADIONUCLIDES IN EFFLUENT WATER

AGE = INFANT
PATHWAY = IRRIGATED FRESH LEAFY VEGETABLES

	TOTAL BODY	GI-LLI	BONE	LIVER	KIDNEY	THYROID	LUNG	SKIN
				(mrem gal)/(Ci min)				
H 3	0.00E-01	0.00E-01	0.00E-01	0.00E-01	0.00E-01	0.00E-01	0.00E-01	0.00E-01
C 14	0.00E-01	0.00E-01	0.00E-01	0.00E-01	0.00E-01	0.00E-01	0.00E-01	0.00E-01
NA 24	0.00E-01	0.00E-01	0.00E-01	0.00E-01	0.00E-01	0.00E-01	0.00E-01	0.00E-01
P 32	0.00E-01	0.00E-01	0.00E-01	0.00E-01	0.00E-01	0.00E-01	0.00E-01	0.00E-01
CR 51	0.00E-01	0.00E-01	0.00E-01	0.00E-01	0.00E-01	0.00E-01	0.00E-01	0.00E-01
MN 54	0.00E-01	0.00E-01	0.00E-01	0.00E-01	0.00E-01	0.00E-01	0.00E-01	0.00E-01
MN 56	0.00E-01	0.00E-01	0.00E-01	0.00E-01	0.00E-01	0.00E-01	0.00E-01	0.00E-01
FE 55	0.00E-01	0.00E-01	0.00E-01	0.00E-01	0.00E-01	0.00E-01	0.00E-01	0.00E-01
FE 59	0.00E-01	0.00E-01	0.00E-01	0.00E-01	0.00E-01	0.00E-01	0.00E-01	0.00E-01
CO 58	0.00E-01	0.00E-01	0.00E-01	0.00E-01	0.00E-01	0.00E-01	0.00E-01	0.00E-01
CO 60	0.00E-01	0.00E-01	0.00E-01	0.00E-01	0.00E-01	0.00E-01	0.00E-01	0.00E-01
NI 63	0.00E-01	0.00E-01	0.00E-01	0.00E-01	0.00E-01	0.00E-01	0.00E-01	0.00E-01
NI 65	0.00E-01	0.00E-01	0.00E-01	0.00E-01	0.00E-01	0.00E-01	0.00E-01	0.00E-01
CU 64	0.00E-01	0.00E-01	0.00E-01	0.00E-01	0.00E-01	0.00E-01	0.00E-01	0.00E-01
ZN 65	0.00E-01	0.00E-01	0.00E-01	0.00E-01	0.00E-01	0.00E-01	0.00E-01	0.00E-01
ZN 69	0.00E-01	0.00E-01	0.00E-01	0.00E-01	0.00E-01	0.00E-01	0.00E-01	0.00E-01
BR 83	0.00E-01	0.00E-01	0.00E-01	0.00E-01	0.00E-01	0.00E-01	0.00E-01	0.00E-01
BR 84	0.00E-01	0.00E-01	0.00E-01	0.00E-01	0.00E-01	0.00E-01	0.00E-01	0.00E-01
BR 85	0.00E-01	0.00E-01	0.00E-01	0.00E-01	0.00E-01	0.00E-01	0.00E-01	0.00E-01
RB 86	0.00E-01	0.00E-01	0.00E-01	0.00E-01	0.00E-01	0.00E-01	0.00E-01	0.00E-01
RB 88	0.00E-01	0.00E-01	0.00E-01	0.00E-01	0.00E-01	0.00E-01	0.00E-01	0.00E-01
RB 89	0.00E-01	0.00E-01	0.00E-01	0.00E-01	0.00E-01	0.00E-01	0.00E-01	0.00E-01
SR 89	0.00E-01	0.00E-01	0.00E-01	0.00E-01	0.00E-01	0.00E-01	0.00E-01	0.00E-01
SR 90	0.00E-01	0.00E-01	0.00E-01	0.00E-01	0.00E-01	0.00E-01	0.00E-01	0.00E-01
SR 91	0.00E-01	0.00E-01	0.00E-01	0.00E-01	0.00E-01	0.00E-01	0.00E-01	0.00E-01
SR 92	0.00E-01	0.00E-01	0.00E-01	0.00E-01	0.00E-01	0.00E-01	0.00E-01	0.00E-01
Y 90	0.00E-01	0.00E-01	0.00E-01	0.00E-01	0.00E-01	0.00E-01	0.00E-01	0.00E-01
Y 91M	0.00E-01	0.00E-01	0.00E-01	0.00E-01	0.00E-01	0.00E-01	0.00E-01	0.00E-01
Y 91	0.00E-01	0.00E-01	0.00E-01	0.00E-01	0.00E-01	0.00E-01	0.00E-01	0.00E-01
Y 92	0.00E-01	0.00E-01	0.00E-01	0.00E-01	0.00E-01	0.00E-01	0.00E-01	0.00E-01
Y 93	0.00E-01	0.00E-01	0.00E-01	0.00E-01	0.00E-01	0.00E-01	0.00E-01	0.00E-01
ZR 95	0.00E-01	0.00E-01	0.00E-01	0.00E-01	0.00E-01	0.00E-01	0.00E-01	0.00E-01
ZR 97	0.00E-01	0.00E-01	0.00E-01	0.00E-01	0.00E-01	0.00E-01	0.00E-01	0.00E-01
NB 95	0.00E-01	0.00E-01	0.00E-01	0.00E-01	0.00E-01	0.00E-01	0.00E-01	0.00E-01
MO 99	0.00E-01	0.00E-01	0.00E-01	0.00E-01	0.00E-01	0.00E-01	0.00E-01	0.00E-01
TC 99M	0.00E-01	0.00E-01	0.00E-01	0.00E-01	0.00E-01	0.00E-01	0.00E-01	0.00E-01
TC101	0.00E-01	0.00E-01	0.00E-01	0.00E-01	0.00E-01	0.00E-01	0.00E-01	0.00E-01

DOSE TRANSFER FACTORS FOR RADIONUCLIDES IN EFFLUENT WATER

AGE = INFANT
PATHWAY = IRRIGATED FRESH LEAFY VEGETABLES

	TOTAL BODY	GI-LLI	BONE	LIVER	KIDNEY	THYROID	LUNG	SKIN
				(mrem gal)/(Ci min)				
RU103	0.00E-01	0.00E-01	0.00E-01	0.00E-01	0.00E-01	0.00E-01	0.00E-01	0.00E-01
RU105	0.00E-01	0.00E-01	0.00E-01	0.00E-01	0.00E-01	0.00E-01	0.00E-01	0.00E-01
RU106	0.00E-01	0.00E-01	0.00E-01	0.00E-01	0.00E-01	0.00E-01	0.00E-01	0.00E-01
AG110M	0.00E-01	0.00E-01	0.00E-01	0.00E-01	0.00E-01	0.00E-01	0.00E-01	0.00E-01
TE125M	0.00E-01	0.00E-01	0.00E-01	0.00E-01	0.00E-01	0.00E-01	0.00E-01	0.00E-01
TE127M	0.00E-01	0.00E-01	0.00E-01	0.00E-01	0.00E-01	0.00E-01	0.00E-01	0.00E-01
TE127	0.00E-01	0.00E-01	0.00E-01	0.00E-01	0.00E-01	0.00E-01	0.00E-01	0.00E-01
TE129M	0.00E-01	0.00E-01	0.00E-01	0.00E-01	0.00E-01	0.00E-01	0.00E-01	0.00E-01
TE129	0.00E-01	0.00E-01	0.00E-01	0.00E-01	0.00E-01	0.00E-01	0.00E-01	0.00E-01
TE131M	0.00E-01	0.00E-01	0.00E-01	0.00E-01	0.00E-01	0.00E-01	0.00E-01	0.00E-01
TE131	0.00E-01	0.00E-01	0.00E-01	0.00E-01	0.00E-01	0.00E-01	0.00E-01	0.00E-01
TE132	0.00E-01	0.00E-01	0.00E-01	0.00E-01	0.00E-01	0.00E-01	0.00E-01	0.00E-01
I 130	0.00E-01	0.00E-01	0.00E-01	0.00E-01	0.00E-01	0.00E-01	0.00E-01	0.00E-01
I 131	0.00E-01	0.00E-01	0.00E-01	0.00E-01	0.00E-01	0.00E-01	0.00E-01	0.00E-01
I 132	0.00E-01	0.00E-01	0.00E-01	0.00E-01	0.00E-01	0.00E-01	0.00E-01	0.00E-01
I 133	0.00E-01	0.00E-01	0.00E-01	0.00E-01	0.00E-01	0.00E-01	0.00E-01	0.00E-01
I 134	0.00E-01	0.00E-01	0.00E-01	0.00E-01	0.00E-01	0.00E-01	0.00E-01	0.00E-01
I 135	0.00E-01	0.00E-01	0.00E-01	0.00E-01	0.00E-01	0.00E-01	0.00E-01	0.00E-01
CS134	0.00E-01	0.00E-01	0.00E-01	0.00E-01	0.00E-01	0.00E-01	0.00E-01	0.00E-01
CS136	0.00E-01	0.00E-01	0.00E-01	0.00E-01	0.00E-01	0.00E-01	0.00E-01	0.00E-01
CS137	0.00E-01	0.00E-01	0.00E-01	0.00E-01	0.00E-01	0.00E-01	0.00E-01	0.00E-01
CS138	0.00E-01	0.00E-01	0.00E-01	0.00E-01	0.00E-01	0.00E-01	0.00E-01	0.00E-01
BA139	0.00E-01	0.00E-01	0.00E-01	0.00E-01	0.00E-01	0.00E-01	0.00E-01	0.00E-01
BA140	0.00E-01	0.00E-01	0.00E-01	0.00E-01	0.00E-01	0.00E-01	0.00E-01	0.00E-01
BA141	0.00E-01	0.00E-01	0.00E-01	0.00E-01	0.00E-01	0.00E-01	0.00E-01	0.00E-01
BA142	0.00E-01	0.00E-01	0.00E-01	0.00E-01	0.00E-01	0.00E-01	0.00E-01	0.00E-01
LA140	0.00E-01	0.00E-01	0.00E-01	0.00E-01	0.00E-01	0.00E-01	0.00E-01	0.00E-01
LA142	0.00E-01	0.00E-01	0.00E-01	0.00E-01	0.00E-01	0.00E-01	0.00E-01	0.00E-01
CE141	0.00E-01	0.00E-01	0.00E-01	0.00E-01	0.00E-01	0.00E-01	0.00E-01	0.00E-01
CE143	0.00E-01	0.00E-01	0.00E-01	0.00E-01	0.00E-01	0.00E-01	0.00E-01	0.00E-01
CE144	0.00E-01	0.00E-01	0.00E-01	0.00E-01	0.00E-01	0.00E-01	0.00E-01	0.00E-01
PR143	0.00E-01	0.00E-01	0.00E-01	0.00E-01	0.00E-01	0.00E-01	0.00E-01	0.00E-01
PR144	0.00E-01	0.00E-01	0.00E-01	0.00E-01	0.00E-01	0.00E-01	0.00E-01	0.00E-01
ND147	0.00E-01	0.00E-01	0.00E-01	0.00E-01	0.00E-01	0.00E-01	0.00E-01	0.00E-01
W 187	0.00E-01	0.00E-01	0.00E-01	0.00E-01	0.00E-01	0.00E-01	0.00E-01	0.00E-01
NP239	0.00E-01	0.00E-01	0.00E-01	0.00E-01	0.00E-01	0.00E-01	0.00E-01	0.00E-01

DOSE TRANSFER FACTORS FOR RADIONUCLIDES IN EFFLUENT WATER

AGE = INFANT
PATHWAY = IRRIGATED STORED FRUIT, VEGETABLES, GRAIN

	TOTAL BODY	GI-LLI	BONE	LIVER	KIDNEY	THYROID	LUNG	SKIN
				(mrem gal)/(Ci min)				
H 3	0.00E-01	0.00E-01	0.00E-01	0.00E-01	0.00E-01	0.00E-01	0.00E-01	0.00E-01
C 14	0.00E-01	0.00E-01	0.00E-01	0.00E-01	0.00E-01	0.00E-01	0.00E-01	0.00E-01
NA 24	0.00E-01	0.00E-01	0.00E-01	0.00E-01	0.00E-01	0.00E-01	0.00E-01	0.00E-01
P 32	0.00E-01	0.00E-01	0.00E-01	0.00E-01	0.00E-01	0.00E-01	0.00E-01	0.00E-01
CR 51	0.00E-01	0.00E-01	0.00E-01	0.00E-01	0.00E-01	0.00E-01	0.00E-01	0.00E-01
MN 54	0.00E-01	0.00E-01	0.00E-01	0.00E-01	0.00E-01	0.00E-01	0.00E-01	0.00E-01
MN 56	0.00E-01	0.00E-01	0.00E-01	0.00E-01	0.00E-01	0.00E-01	0.00E-01	0.00E-01
FE 55	0.00E-01	0.00E-01	0.00E-01	0.00E-01	0.00E-01	0.00E-01	0.00E-01	0.00E-01
FE 59	0.00E-01	0.00E-01	0.00E-01	0.00E-01	0.00E-01	0.00E-01	0.00E-01	0.00E-01
CO 58	0.00E-01	0.00E-01	0.00E-01	0.00E-01	0.00E-01	0.00E-01	0.00E-01	0.00E-01
CO 60	0.00E-01	0.00E-01	0.00E-01	0.00E-01	0.00E-01	0.00E-01	0.00E-01	0.00E-01
NI 63	0.00E-01	0.00E-01	0.00E-01	0.00E-01	0.00E-01	0.00E-01	0.00E-01	0.00E-01
NI 65	0.00E-01	0.00E-01	0.00E-01	0.00E-01	0.00E-01	0.00E-01	0.00E-01	0.00E-01
CU 64	0.00E-01	0.00E-01	0.00E-01	0.00E-01	0.00E-01	0.00E-01	0.00E-01	0.00E-01
ZN 65	0.00E-01	0.00E-01	0.00E-01	0.00E-01	0.00E-01	0.00E-01	0.00E-01	0.00E-01
ZN 69	0.00E-01	0.00E-01	0.00E-01	0.00E-01	0.00E-01	0.00E-01	0.00E-01	0.00E-01
BR 83	0.00E-01	0.00E-01	0.00E-01	0.00E-01	0.00E-01	0.00E-01	0.00E-01	0.00E-01
BR 84	0.00E-01	0.00E-01	0.00E-01	0.00E-01	0.00E-01	0.00E-01	0.00E-01	0.00E-01
BR 85	0.00E-01	0.00E-01	0.00E-01	0.00E-01	0.00E-01	0.00E-01	0.00E-01	0.00E-01
RB 86	0.00E-01	0.00E-01	0.00E-01	0.00E-01	0.00E-01	0.00E-01	0.00E-01	0.00E-01
RB 88	0.00E-01	0.00E-01	0.00E-01	0.00E-01	0.00E-01	0.00E-01	0.00E-01	0.00E-01
RB 89	0.00E-01	0.00E-01	0.00E-01	0.00E-01	0.00E-01	0.00E-01	0.00E-01	0.00E-01
SR 89	0.00E-01	0.00E-01	0.00E-01	0.00E-01	0.00E-01	0.00E-01	0.00E-01	0.00E-01
SR 90	0.00E-01	0.00E-01	0.00E-01	0.00E-01	0.00E-01	0.00E-01	0.00E-01	0.00E-01
SR 91	0.00E-01	0.00E-01	0.00E-01	0.00E-01	0.00E-01	0.00E-01	0.00E-01	0.00E-01
SR 92	0.00E-01	0.00E-01	0.00E-01	0.00E-01	0.00E-01	0.00E-01	0.00E-01	0.00E-01
Y 90	0.00E-01	0.00E-01	0.00E-01	0.00E-01	0.00E-01	0.00E-01	0.00E-01	0.00E-01
Y 91M	0.00E-01	0.00E-01	0.00E-01	0.00E-01	0.00E-01	0.00E-01	0.00E-01	0.00E-01
Y 91	0.00E-01	0.00E-01	0.00E-01	0.00E-01	0.00E-01	0.00E-01	0.00E-01	0.00E-01
Y 92	0.00E-01	0.00E-01	0.00E-01	0.00E-01	0.00E-01	0.00E-01	0.00E-01	0.00E-01
Y 93	0.00E-01	0.00E-01	0.00E-01	0.00E-01	0.00E-01	0.00E-01	0.00E-01	0.00E-01
ZR 95	0.00E-01	0.00E-01	0.00E-01	0.00E-01	0.00E-01	0.00E-01	0.00E-01	0.00E-01
ZR 97	0.00E-01	0.00E-01	0.00E-01	0.00E-01	0.00E-01	0.00E-01	0.00E-01	0.00E-01
NB 95	0.00E-01	0.00E-01	0.00E-01	0.00E-01	0.00E-01	0.00E-01	0.00E-01	0.00E-01
MO 99	0.00E-01	0.00E-01	0.00E-01	0.00E-01	0.00E-01	0.00E-01	0.00E-01	0.00E-01
TC 99M	0.00E-01	0.00E-01	0.00E-01	0.00E-01	0.00E-01	0.00E-01	0.00E-01	0.00E-01
TC101	0.00E-01	0.00E-01	0.00E-01	0.00E-01	0.00E-01	0.00E-01	0.00E-01	0.00E-01

DOSE TRANSFER FACTORS FOR RADIONUCLIDES IN EFFLUENT WATER

AGE = INFANT
PATHWAY = IRRIGATED STORED FRUIT, VEGETABLES, GRAIN

	TOTAL BODY	GI-LLI	BONE	LIVER	KIDNEY	THYROID	LUNG	SKIN
				(mrem gal)/(Ci min)				
RU103	0.00E-01	0.00E-01	0.00E-01	0.00E-01	0.00E-01	0.00E-01	0.00E-01	0.00E-01
RU105	0.00E-01	0.00E-01	0.00E-01	0.00E-01	0.00E-01	0.00E-01	0.00E-01	0.00E-01
RU106	0.00E-01	0.00E-01	0.00E-01	0.00E-01	0.00E-01	0.00E-01	0.00E-01	0.00E-01
AG110M	0.00E-01	0.00E-01	0.00E-01	0.00E-01	0.00E-01	0.00E-01	0.00E-01	0.00E-01
TE125M	0.00E-01	0.00E-01	0.00E-01	0.00E-01	0.00E-01	0.00E-01	0.00E-01	0.00E-01
TE127M	0.00E-01	0.00E-01	0.00E-01	0.00E-01	0.00E-01	0.00E-01	0.00E-01	0.00E-01
TE127	0.00E-01	0.00E-01	0.00E-01	0.00E-01	0.00E-01	0.00E-01	0.00E-01	0.00E-01
TE129M	0.00E-01	0.00E-01	0.00E-01	0.00E-01	0.00E-01	0.00E-01	0.00E-01	0.00E-01
TE129	0.00E-01	0.00E-01	0.00E-01	0.00E-01	0.00E-01	0.00E-01	0.00E-01	0.00E-01
TE131M	0.00E-01	0.00E-01	0.00E-01	0.00E-01	0.00E-01	0.00E-01	0.00E-01	0.00E-01
TE131	0.00E-01	0.00E-01	0.00E-01	0.00E-01	0.00E-01	0.00E-01	0.00E-01	0.00E-01
TE132	0.00E-01	0.00E-01	0.00E-01	0.00E-01	0.00E-01	0.00E-01	0.00E-01	0.00E-01
I 130	0.00E-01	0.00E-01	0.00E-01	0.00E-01	0.00E-01	0.00E-01	0.00E-01	0.00E-01
I 131	0.00E-01	0.00E-01	0.00E-01	0.00E-01	0.00E-01	0.00E-01	0.00E-01	0.00E-01
I 132	0.00E-01	0.00E-01	0.00E-01	0.00E-01	0.00E-01	0.00E-01	0.00E-01	0.00E-01
I 133	0.00E-01	0.00E-01	0.00E-01	0.00E-01	0.00E-01	0.00E-01	0.00E-01	0.00E-01
I 134	0.00E-01	0.00E-01	0.00E-01	0.00E-01	0.00E-01	0.00E-01	0.00E-01	0.00E-01
I 135	0.00E-01	0.00E-01	0.00E-01	0.00E-01	0.00E-01	0.00E-01	0.00E-01	0.00E-01
CS134	0.00E-01	0.00E-01	0.00E-01	0.00E-01	0.00E-01	0.00E-01	0.00E-01	0.00E-01
CS136	0.00E-01	0.00E-01	0.00E-01	0.00E-01	0.00E-01	0.00E-01	0.00E-01	0.00E-01
CS137	0.00E-01	0.00E-01	0.00E-01	0.00E-01	0.00E-01	0.00E-01	0.00E-01	0.00E-01
CS138	0.00E-01	0.00E-01	0.00E-01	0.00E-01	0.00E-01	0.00E-01	0.00E-01	0.00E-01
BA139	0.00E-01	0.00E-01	0.00E-01	0.00E-01	0.00E-01	0.00E-01	0.00E-01	0.00E-01
BA140	0.00E-01	0.00E-01	0.00E-01	0.00E-01	0.00E-01	0.00E-01	0.00E-01	0.00E-01
BA141	0.00E-01	0.00E-01	0.00E-01	0.00E-01	0.00E-01	0.00E-01	0.00E-01	0.00E-01
BA142	0.00E-01	0.00E-01	0.00E-01	0.00E-01	0.00E-01	0.00E-01	0.00E-01	0.00E-01
LA140	0.00E-01	0.00E-01	0.00E-01	0.00E-01	0.00E-01	0.00E-01	0.00E-01	0.00E-01
LA142	0.00E-01	0.00E-01	0.00E-01	0.00E-01	0.00E-01	0.00E-01	0.00E-01	0.00E-01
CE141	0.00E-01	0.00E-01	0.00E-01	0.00E-01	0.00E-01	0.00E-01	0.00E-01	0.00E-01
CE143	0.00E-01	0.00E-01	0.00E-01	0.00E-01	0.00E-01	0.00E-01	0.00E-01	0.00E-01
CE144	0.00E-01	0.00E-01	0.00E-01	0.00E-01	0.00E-01	0.00E-01	0.00E-01	0.00E-01
PR143	0.00E-01	0.00E-01	0.00E-01	0.00E-01	0.00E-01	0.00E-01	0.00E-01	0.00E-01
PR144	0.00E-01	0.00E-01	0.00E-01	0.00E-01	0.00E-01	0.00E-01	0.00E-01	0.00E-01
ND147	0.00E-01	0.00E-01	0.00E-01	0.00E-01	0.00E-01	0.00E-01	0.00E-01	0.00E-01
W 187	0.00E-01	0.00E-01	0.00E-01	0.00E-01	0.00E-01	0.00E-01	0.00E-01	0.00E-01
NP239	0.00E-01	0.00E-01	0.00E-01	0.00E-01	0.00E-01	0.00E-01	0.00E-01	0.00E-01

DOSE TRANSFER FACTORS FOR RADIONUCLIDES IN EFFLUENT WATER

AGE = INFANT
PATHWAY = IRRIGATED FRESH FORAGE--MILK

	TOTAL BODY	GI-LLI	BONE	LIVER	KIDNEY	THYROID	LUNG	SKIN
				(mrem gal)/(Ci min)				
H 3	1.32E+01	1.32E+01	0.00E-01	1.32E+01	1.32E+01	1.32E+01	1.32E+01	0.00E-01
C 14	6.12E+04	6.12E+04	2.87E+05	6.12E+04	6.12E+04	6.12E+04	6.12E+04	0.00E-01
NA 24	3.60E+02	3.60E+02	3.60E+02	3.60E+02	3.60E+02	3.60E+02	3.60E+02	0.00E-01
P 32	1.43E+05	5.00E+04	3.69E+06	2.17E+05	0.00E-01	0.00E-01	0.00E-01	0.00E-01
CR 51	3.48E+00	1.01E+02	0.00E-01	0.00E-01	4.96E-01	2.27E+00	4.42E+00	0.00E-01
MN 54	1.69E+02	2.74E+02	0.00E-01	7.46E+02	1.65E+02	0.00E-01	0.00E-01	0.00E-01
MN 56	9.56E-08	5.04E-05	0.00E-01	5.54E-07	4.76E-07	0.00E-01	0.00E-01	0.00E-01
FE 55	4.39E+02	2.09E+02	2.54E+03	1.64E+03	0.00E-01	0.00E-01	8.04E+02	0.00E-01
FE 59	3.20E+03	3.88E+03	4.65E+03	8.13E+03	0.00E-01	0.00E-01	2.40E+03	0.00E-01
CO 58	1.22E+03	1.22E+03	0.00E-01	4.88E+02	0.00E-01	0.00E-01	0.00E-01	0.00E-01
CO 60	3.92E+03	3.96E+03	0.00E-01	1.66E+03	0.00E-01	0.00E-01	0.00E-01	0.00E-01
NI 63	2.31E+04	2.05E+03	6.66E+05	4.12E+04	0.00E-01	0.00E-01	0.00E-01	0.00E-01
NI 65	3.37E-06	5.64E-04	6.55E-05	7.41E-06	0.00E-01	0.00E-01	0.00E-01	0.00E-01
CU 64	1.96E+00	8.67E+01	0.00E-01	4.22E+00	7.14E+00	0.00E-01	0.00E-01	0.00E-01
ZN 65	1.73E+05	3.16E+05	1.09E+05	3.75E+05	1.82E+05	0.00E-01	0.00E-01	0.00E-01
ZN 69	7.68E-17	8.41E-14	5.73E-16	1.03E-15	4.29E-16	0.00E-01	0.00E-01	0.00E-01
BR 83	1.74E-05	0.00E-01	0.00E-01	0.00E-01	0.00E-01	0.00E-01	0.00E-01	0.00E-01
BR 84	1.42E-26	0.00E-01	0.00E-01	0.00E-01	0.00E-01	0.00E-01	0.00E-01	0.00E-01
BR 85	1.20E-34	0.00E-01	0.00E-01	0.00E-01	0.00E-01	0.00E-01	0.00E-01	0.00E-01
RB 86	2.46E+05	1.28E+04	0.00E-01	4.99E+05	0.00E-01	0.00E-01	0.00E-01	0.00E-01
RB 88	1.23E-27	2.19E-27	0.00E-01	2.24E-27	0.00E-01	0.00E-01	0.00E-01	0.00E-01
RB 89	5.11E-28	2.53E-28	0.00E-01	7.42E-28	0.00E-01	0.00E-01	0.00E-01	0.00E-01
SR 89	7.54E+03	5.40E+03	2.63E+05	0.00E-01	0.00E-01	0.00E-01	0.00E-01	0.00E-01
SR 90	1.30E+05	5.25E+04	6.43E+06	0.00E-01	0.00E-01	0.00E-01	0.00E-01	0.00E-01
SR 91	2.21E-01	7.23E+00	6.11E+00	0.00E-01	0.00E-01	0.00E-01	0.00E-01	0.00E-01
SR 92	3.32E-06	9.63E-04	8.93E-05	0.00E-01	0.00E-01	0.00E-01	0.00E-01	0.00E-01
Y 90	4.38E-04	2.26E+01	1.63E-02	0.00E-01	0.00E-01	0.00E-01	0.00E-01	0.00E-01
Y 91M	1.90E-25	1.86E-20	5.59E-24	0.00E-01	0.00E-01	0.00E-01	0.00E-01	0.00E-01
Y 91	3.97E-02	1.07E+02	1.49E+00	0.00E-01	0.00E-01	0.00E-01	0.00E-01	0.00E-01
Y 92	3.15E-10	2.14E-04	1.12E-08	0.00E-01	0.00E-01	0.00E-01	0.00E-01	0.00E-01
Y 93	1.32E-06	3.83E-01	4.85E-05	0.00E-01	0.00E-01	0.00E-01	0.00E-01	0.00E-01
ZR 95	2.38E-02	1.67E+01	1.38E-01	3.36E-02	3.62E-02	0.00E-01	0.00E-01	0.00E-01
ZR 97	7.40E-06	1.03E+00	9.44E-05	1.62E-05	1.63E-05	0.00E-01	0.00E-01	0.00E-01
NB 95	2.99E+00	4.37E+03	1.26E+01	5.18E+00	3.71E+00	0.00E-01	0.00E-01	0.00E-01
MO 99	9.71E+02	1.64E+03	0.00E-01	4.98E+03	7.44E+03	0.00E-01	0.00E-01	0.00E-01
TC 99M	1.58E-02	3.56E-01	5.95E-04	1.23E-03	1.32E-02	0.00E-01	6.41E-04	0.00E-01
TC101	4.63E-29	7.96E-28	3.72E-30	4.68E-30	5.57E-29	0.00E-01	2.55E-30	0.00E-01

DOSE TRANSFER FACTORS FOR RADIONUCLIDES IN EFFLUENT WATER

AGE = INFANT
PATHWAY = IRRIGATED FRESH FORAGE--MILK

	TOTAL BODY	GI-LLI	BONE	LIVER	KIDNEY	THYROID	LUNG	SKIN
				(mrem gal)/(Ci min)				
RU103	6.08E-02	2.21E+00	1.82E-01	0.00E-01	3.78E-01	0.00E-01	0.00E-01	0.00E-01
RU105	5.62E-08	6.64E-05	1.67E-07	0.00E-01	1.23E-06	0.00E-01	0.00E-01	0.00E-01
RU106	4.54E-01	2.76E+01	3.64E+00	0.00E-01	4.30E+00	0.00E-01	0.00E-01	0.00E-01
AG110M	3.61E+03	2.83E+05	7.47E+03	5.45E+03	7.80E+03	0.00E-01	0.00E-01	0.00E-01
TE125M	4.25E+02	1.50E+03	3.14E+03	1.05E+03	0.00E-01	1.06E+03	0.00E-01	0.00E-01
TE127M	1.04E+03	3.48E+03	8.62E+03	2.86E+03	2.12E+04	2.49E+03	0.00E-01	0.00E-01
TE127	3.07E-02	3.00E+00	1.43E-01	4.79E-02	3.49E-01	1.16E-01	0.00E-01	0.00E-01
TE129M	1.85E+03	7.16E+03	1.20E+04	4.12E+03	3.00E+04	4.61E+03	0.00E-01	0.00E-01
TE129	8.74E-15	2.99E-12	3.74E-14	1.29E-14	9.32E-14	3.14E-14	0.00E-01	0.00E-01
TE131M	2.67E+01	5.44E+02	8.02E+01	3.23E+01	2.22E+02	6.54E+01	0.00E-01	0.00E-01
TE131	2.04E-29	2.94E-27	7.27E-29	2.69E-29	1.86E-28	6.49E-29	0.00E-01	0.00E-01
TE132	2.35E+02	9.32E+02	5.09E+02	2.52E+02	1.58E+03	3.72E+02	0.00E-01	0.00E-01
I 130	1.43E+01	7.64E+00	1.62E+01	3.57E+01	3.92E+01	4.00E+03	0.00E-01	0.00E-01
I 131	6.68E+03	5.42E+02	1.29E+04	1.52E+04	1.77E+04	4.99E+06	0.00E-01	0.00E-01
I 132	3.77E-06	8.58E-06	5.22E-06	1.06E-05	1.18E-05	4.97E-04	0.00E-01	0.00E-01
I 133	7.27E+01	4.20E+01	1.70E+02	2.48E+02	2.92E+02	4.51E+04	0.00E-01	0.00E-01
I 134	2.75E-17	7.99E-17	3.77E-17	7.73E-17	8.64E-17	1.80E-15	0.00E-01	0.00E-01
I 135	3.52E-01	3.49E-01	4.85E-01	9.65E-01	1.08E+00	8.65E+01	0.00E-01	0.00E-01
CS134	1.30E+05	3.49E+03	6.90E+05	1.29E+06	3.31E+05	0.00E-01	1.36E+05	0.00E-01
CS136	4.98E+04	2.03E+03	4.54E+04	1.33E+05	5.32E+04	0.00E-01	1.09E+04	0.00E-01
CS137	8.06E+04	3.56E+03	9.72E+05	1.14E+06	3.05E+05	0.00E-01	1.24E+05	0.00E-01
CS138	3.49E-27	1.15E-26	4.43E-27	7.21E-27	3.59E-27	0.00E-01	5.61E-28	0.00E-01
BA139	1.56E-13	3.41E-10	5.38E-12	3.57E-15	2.14E-15	0.00E-01	2.16E-15	0.00E-01
BA140	2.87E+02	1.37E+03	5.56E+03	5.56E+00	1.32E+00	0.00E-01	3.42E+00	0.00E-01
BA141	8.70E-31	3.37E-28	2.76E-29	1.89E-32	1.14E-32	0.00E-01	1.15E-32	0.00E-01
BA142	6.86E-32	5.75E-30	1.39E-30	1.16E-33	6.67E-34	0.00E-01	7.01E-34	0.00E-01
LA140	9.81E-05	4.48E+00	9.68E-04	3.81E-04	0.00E-01	0.00E-01	0.00E-01	0.00E-01
LA142	1.17E-16	8.27E-11	1.33E-15	4.87E-16	0.00E-01	0.00E-01	0.00E-01	0.00E-01
CE141	6.63E-02	2.91E+02	9.23E-01	5.63E-01	1.74E-01	0.00E-01	0.00E-01	0.00E-01
CE143	7.18E-04	3.67E+01	9.49E-03	6.30E+00	1.83E-03	0.00E-01	0.00E-01	0.00E-01
CE144	2.49E+00	2.55E+03	4.44E+01	1.82E+01	7.35E+00	0.00E-01	0.00E-01	0.00E-01
PR143	1.69E-03	1.80E+01	3.42E-02	1.28E-02	4.75E-03	0.00E-01	0.00E-01	0.00E-01
PR144	9.26E-36	3.31E-30	1.84E-34	7.11E-35	2.58E-35	0.00E-01	0.00E-01	0.00E-01
ND147	1.30E-03	1.35E+01	2.07E-02	2.12E-02	8.19E-03	0.00E-01	0.00E-01	0.00E-01
W 187	3.47E-01	5.90E+01	1.44E+00	1.00E+00	0.00E-01	0.00E-01	0.00E-01	0.00E-01
NP239	4.42E-05	2.26E+00	8.75E-04	7.83E-05	1.56E-04	0.00E-01	0.00E-01	0.00E-01

DOSE TRANSFER FACTORS FOR RADIONUCLIDES IN EFFLUENT WATER

AGE = INFANT
PATHWAY = IRRIGATED FRESH FORAGE--MEAT

	TOTAL BODY	GI-LLI	BONE	LIVER	KIDNEY	THYROID	LUNG	SKIN
				(mrem gal)/(Ci min)				
H 3	0.00E-01	0.00E-01	0.00E-01	0.00E-01	0.00E-01	0.00E-01	0.00E-01	0.00E-01
C 14	0.00E-01	0.00E-01	0.00E-01	0.00E-01	0.00E-01	0.00E-01	0.00E-01	0.00E-01
NA 24	0.00E-01	0.00E-01	0.00E-01	0.00E-01	0.00E-01	0.00E-01	0.00E-01	0.00E-01
P 32	0.00E-01	0.00E-01	0.00E-01	0.00E-01	0.00E-01	0.00E-01	0.00E-01	0.00E-01
CR 51	0.00E-01	0.00E-01	0.00E-01	0.00E-01	0.00E-01	0.00E-01	0.00E-01	0.00E-01
MN 54	0.00E-01	0.00E-01	0.00E-01	0.00E-01	0.00E-01	0.00E-01	0.00E-01	0.00E-01
MN 56	0.00E-01	0.00E-01	0.00E-01	0.00E-01	0.00E-01	0.00E-01	0.00E-01	0.00E-01
FE 55	0.00E-01	0.00E-01	0.00E-01	0.00E-01	0.00E-01	0.00E-01	0.00E-01	0.00E-01
FE 59	0.00E-01	0.00E-01	0.00E-01	0.00E-01	0.00E-01	0.00E-01	0.00E-01	0.00E-01
CO 58	0.00E-01	0.00E-01	0.00E-01	0.00E-01	0.00E-01	0.00E-01	0.00E-01	0.00E-01
CO 60	0.00E-01	0.00E-01	0.00E-01	0.00E-01	0.00E-01	0.00E-01	0.00E-01	0.00E-01
NI 63	0.00E-01	0.00E-01	0.00E-01	0.00E-01	0.00E-01	0.00E-01	0.00E-01	0.00E-01
NI 65	0.00E-01	0.00E-01	0.00E-01	0.00E-01	0.00E-01	0.00E-01	0.00E-01	0.00E-01
CU 64	0.00E-01	0.00E-01	0.00E-01	0.00E-01	0.00E-01	0.00E-01	0.00E-01	0.00E-01
ZN 65	0.00E-01	0.00E-01	0.00E-01	0.00E-01	0.00E-01	0.00E-01	0.00E-01	0.00E-01
ZN 69	0.00E-01	0.00E-01	0.00E-01	0.00E-01	0.00E-01	0.00E-01	0.00E-01	0.00E-01
BR 83	0.00E-01	0.00E-01	0.00E-01	0.00E-01	0.00E-01	0.00E-01	0.00E-01	0.00E-01
BR 84	0.00E-01	0.00E-01	0.00E-01	0.00E-01	0.00E-01	0.00E-01	0.00E-01	0.00E-01
BR 85	0.00E-01	0.00E-01	0.00E-01	0.00E-01	0.00E-01	0.00E-01	0.00E-01	0.00E-01
RB 86	0.00E-01	0.00E-01	0.00E-01	0.00E-01	0.00E-01	0.00E-01	0.00E-01	0.00E-01
RB 88	0.00E-01	0.00E-01	0.00E-01	0.00E-01	0.00E-01	0.00E-01	0.00E-01	0.00E-01
RB 89	0.00E-01	0.00E-01	0.00E-01	0.00E-01	0.00E-01	0.00E-01	0.00E-01	0.00E-01
SR 89	0.00E-01	0.00E-01	0.00E-01	0.00E-01	0.00E-01	0.00E-01	0.00E-01	0.00E-01
SR 90	0.00E-01	0.00E-01	0.00E-01	0.00E-01	0.00E-01	0.00E-01	0.00E-01	0.00E-01
SR 91	0.00E-01	0.00E-01	0.00E-01	0.00E-01	0.00E-01	0.00E-01	0.00E-01	0.00E-01
SR 92	0.00E-01	0.00E-01	0.00E-01	0.00E-01	0.00E-01	0.00E-01	0.00E-01	0.00E-01
Y 90	0.00E-01	0.00E-01	0.00E-01	0.00E-01	0.00E-01	0.00E-01	0.00E-01	0.00E-01
Y 91M	0.00E-01	0.00E-01	0.00E-01	0.00E-01	0.00E-01	0.00E-01	0.00E-01	0.00E-01
Y 91	0.00E-01	0.00E-01	0.00E-01	0.00E-01	0.00E-01	0.00E-01	0.00E-01	0.00E-01
Y 92	0.00E-01	0.00E-01	0.00E-01	0.00E-01	0.00E-01	0.00E-01	0.00E-01	0.00E-01
Y 93	0.00E-01	0.00E-01	0.00E-01	0.00E-01	0.00E-01	0.00E-01	0.00E-01	0.00E-01
ZR 95	0.00E-01	0.00E-01	0.00E-01	0.00E-01	0.00E-01	0.00E-01	0.00E-01	0.00E-01
ZR 97	0.00E-01	0.00E-01	0.00E-01	0.00E-01	0.00E-01	0.00E-01	0.00E-01	0.00E-01
NB 95	0.00E-01	0.00E-01	0.00E-01	0.00E-01	0.00E-01	0.00E-01	0.00E-01	0.00E-01
MO 99	0.00E-01	0.00E-01	0.00E-01	0.00E-01	0.00E-01	0.00E-01	0.00E-01	0.00E-01
TC 99M	0.00E-01	0.00E-01	0.00E-01	0.00E-01	0.00E-01	0.00E-01	0.00E-01	0.00E-01
TC101	0.00E-01	0.00E-01	0.00E-01	0.00E-01	0.00E-01	0.00E-01	0.00E-01	0.00E-01

DOSE TRANSFER FACTORS FOR RADIONUCLIDES IN EFFLUENT WATER

AGE = INFANT
PATHWAY = IRRIGATED FRESH FORAGE--MEAT

	TOTAL BODY	GI-LLI	BONE	LIVER	KIDNEY	THYROID	LUNG	SKIN
				(mrem gal)/(Ci min)				
RU103	0.00E-01	0.00E-01	0.00E-01	0.00E-01	0.00E-01	0.00E-01	0.00E-01	0.00E-01
RU105	0.00E-01	0.00E-01	0.00E-01	0.00E-01	0.00E-01	0.00E-01	0.00E-01	0.00E-01
RU106	0.00E-01	0.00E-01	0.00E-01	0.00E-01	0.00E-01	0.00E-01	0.00E-01	0.00E-01
AG110M	0.00E-01	0.00E-01	0.00E-01	0.00E-01	0.00E-01	0.00E-01	0.00E-01	0.00E-01
TE125M	0.00E-01	0.00E-01	0.00E-01	0.00E-01	0.00E-01	0.00E-01	0.00E-01	0.00E-01
TE127M	0.00E-01	0.00E-01	0.00E-01	0.00E-01	0.00E-01	0.00E-01	0.00E-01	0.00E-01
TE127	0.00E-01	0.00E-01	0.00E-01	0.00E-01	0.00E-01	0.00E-01	0.00E-01	0.00E-01
TE129M	0.00E-01	0.00E-01	0.00E-01	0.00E-01	0.00E-01	0.00E-01	0.00E-01	0.00E-01
TE129	0.00E-01	0.00E-01	0.00E-01	0.00E-01	0.00E-01	0.00E-01	0.00E-01	0.00E-01
TE131M	0.00E-01	0.00E-01	0.00E-01	0.00E-01	0.00E-01	0.00E-01	0.00E-01	0.00E-01
TE131	0.00E-01	0.00E-01	0.00E-01	0.00E-01	0.00E-01	0.00E-01	0.00E-01	0.00E-01
TE132	0.00E-01	0.00E-01	0.00E-01	0.00E-01	0.00E-01	0.00E-01	0.00E-01	0.00E-01
I 130	0.00E-01	0.00E-01	0.00E-01	0.00E-01	0.00E-01	0.00E-01	0.00E-01	0.00E-01
I 131	0.00E-01	0.00E-01	0.00E-01	0.00E-01	0.00E-01	0.00E-01	0.00E-01	0.00E-01
I 132	0.00E-01	0.00E-01	0.00E-01	0.00E-01	0.00E-01	0.00E-01	0.00E-01	0.00E-01
I 133	0.00E-01	0.00E-01	0.00E-01	0.00E-01	0.00E-01	0.00E-01	0.00E-01	0.00E-01
I 134	0.00E-01	0.00E-01	0.00E-01	0.00E-01	0.00E-01	0.00E-01	0.00E-01	0.00E-01
I 135	0.00E-01	0.00E-01	0.00E-01	0.00E-01	0.00E-01	0.00E-01	0.00E-01	0.00E-01
CS134	0.00E-01	0.00E-01	0.00E-01	0.00E-01	0.00E-01	0.00E-01	0.00E-01	0.00E-01
CS136	0.00E-01	0.00E-01	0.00E-01	0.00E-01	0.00E-01	0.00E-01	0.00E-01	0.00E-01
CS137	0.00E-01	0.00E-01	0.00E-01	0.00E-01	0.00E-01	0.00E-01	0.00E-01	0.00E-01
CS138	0.00E-01	0.00E-01	0.00E-01	0.00E-01	0.00E-01	0.00E-01	0.00E-01	0.00E-01
BA139	0.00E-01	0.00E-01	0.00E-01	0.00E-01	0.00E-01	0.00E-01	0.00E-01	0.00E-01
BA140	0.00E-01	0.00E-01	0.00E-01	0.00E-01	0.00E-01	0.00E-01	0.00E-01	0.00E-01
BA141	0.00E-01	0.00E-01	0.00E-01	0.00E-01	0.00E-01	0.00E-01	0.00E-01	0.00E-01
BA142	0.00E-01	0.00E-01	0.00E-01	0.00E-01	0.00E-01	0.00E-01	0.00E-01	0.00E-01
LA140	0.00E-01	0.00E-01	0.00E-01	0.00E-01	0.00E-01	0.00E-01	0.00E-01	0.00E-01
LA142	0.00E-01	0.00E-01	0.00E-01	0.00E-01	0.00E-01	0.00E-01	0.00E-01	0.00E-01
CE141	0.00E-01	0.00E-01	0.00E-01	0.00E-01	0.00E-01	0.00E-01	0.00E-01	0.00E-01
CE143	0.00E-01	0.00E-01	0.00E-01	0.00E-01	0.00E-01	0.00E-01	0.00E-01	0.00E-01
CE144	0.00E-01	0.00E-01	0.00E-01	0.00E-01	0.00E-01	0.00E-01	0.00E-01	0.00E-01
PR143	0.00E-01	0.00E-01	0.00E-01	0.00E-01	0.00E-01	0.00E-01	0.00E-01	0.00E-01
PR144	0.00E-01	0.00E-01	0.00E-01	0.00E-01	0.00E-01	0.00E-01	0.00E-01	0.00E-01
ND147	0.00E-01	0.00E-01	0.00E-01	0.00E-01	0.00E-01	0.00E-01	0.00E-01	0.00E-01
W 187	0.00E-01	0.00E-01	0.00E-01	0.00E-01	0.00E-01	0.00E-01	0.00E-01	0.00E-01
NP239	0.00E-01	0.00E-01	0.00E-01	0.00E-01	0.00E-01	0.00E-01	0.00E-01	0.00E-01

DOSE TRANSFER FACTORS FOR RADIONUCLIDES IN EFFLUENT WATER

AGE = INFANT
PATHWAY = IRRIGATED STORED FEED--MILK

	TOTAL BODY	GI-LLI	BONE	LIVER	KIDNEY	THYROID	LUNG	SKIN
				(mrem gal)/(Ci min)				
H 3	1.32E+01	1.32E+01	0.00E-01	1.32E+01	1.32E+01	1.32E+01	1.32E+01	0.00E-01
C 14	6.33E+04	6.33E+04	2.96E+05	6.33E+04	6.33E+04	6.33E+04	6.33E+04	0.00E-01
NA 24	3.60E+02	3.60E+02	3.60E+02	3.60E+02	3.60E+02	3.60E+02	3.60E+02	0.00E-01
P 32	1.51E+05	5.26E+04	3.89E+06	2.29E+05	0.00E-01	0.00E-01	0.00E-01	0.00E-01
CR 51	3.85E+00	1.12E+02	0.00E-01	0.00E-01	5.49E-01	2.51E+00	4.89E+00	0.00E-01
MN 54	2.05E+02	3.32E+02	0.00E-01	9.03E+02	2.00E+02	0.00E-01	0.00E-01	0.00E-01
MN 56	9.56E-08	5.04E-05	0.00E-01	5.54E-07	4.76E-07	0.00E-01	0.00E-01	0.00E-01
FE 55	5.37E+02	2.55E+02	3.11E+03	2.01E+03	0.00E-01	0.00E-01	9.82E+02	0.00E-01
FE 59	3.66E+03	4.44E+03	5.32E+03	9.28E+03	0.00E-01	0.00E-01	2.74E+03	0.00E-01
CO 58	1.42E+03	1.42E+03	0.00E-01	5.70E+02	0.00E-01	0.00E-01	0.00E-01	0.00E-01
CO 60	4.80E+03	4.84E+03	0.00E-01	2.03E+03	0.00E-01	0.00E-01	0.00E-01	0.00E-01
NI 63	2.82E+04	2.50E+03	8.14E+05	5.03E+04	0.00E-01	0.00E-01	0.00E-01	0.00E-01
NI 65	3.37E-06	5.64E-04	6.55E-05	7.41E-06	0.00E-01	0.00E-01	0.00E-01	0.00E-01
CU 64	1.96E+00	8.67E+01	0.00E-01	4.22E+00	7.14E+00	0.00E-01	0.00E-01	0.00E-01
ZN 65	2.08E+05	3.81E+05	1.31E+05	4.51E+05	2.18E+05	0.00E-01	0.00E-01	0.00E-01
ZN 69	7.68E-17	8.41E-14	5.73E-16	1.03E-15	4.29E-16	0.00E-01	0.00E-01	0.00E-01
BR 83	1.74E-05	0.00E-01	0.00E-01	0.00E-01	0.00E-01	0.00E-01	0.00E-01	0.00E-01
BR 84	1.42E-26	0.00E-01	0.00E-01	0.00E-01	0.00E-01	0.00E-01	0.00E-01	0.00E-01
BR 85	1.20E-34	0.00E-01	0.00E-01	0.00E-01	0.00E-01	0.00E-01	0.00E-01	0.00E-01
RB 86	2.65E+05	1.37E+04	0.00E-01	5.36E+05	0.00E-01	0.00E-01	0.00E-01	0.00E-01
RB 88	1.23E-27	2.19E-27	0.00E-01	2.24E-27	0.00E-01	0.00E-01	0.00E-01	0.00E-01
RB 89	5.11E-28	2.53E-28	0.00E-01	7.42E-28	0.00E-01	0.00E-01	0.00E-01	0.00E-01
SR 89	8.65E+03	6.20E+03	3.01E+05	0.00E-01	0.00E-01	0.00E-01	0.00E-01	0.00E-01
SR 90	1.46E+05	5.89E+04	7.22E+06	0.00E-01	0.00E-01	0.00E-01	0.00E-01	0.00E-01
SR 91	2.21E-01	7.23E+00	6.11E+00	0.00E-01	0.00E-01	0.00E-01	0.00E-01	0.00E-01
SR 92	3.32E-06	9.63E-04	8.93E-05	0.00E-01	0.00E-01	0.00E-01	0.00E-01	0.00E-01
Y 90	4.38E-04	2.26E+01	1.63E-02	0.00E-01	0.00E-01	0.00E-01	0.00E-01	0.00E-01
Y 91M	1.90E-25	1.86E-20	5.59E-24	0.00E-01	0.00E-01	0.00E-01	0.00E-01	0.00E-01
Y 91	4.60E-02	1.24E+02	1.73E+00	0.00E-01	0.00E-01	0.00E-01	0.00E-01	0.00E-01
Y 92	3.15E-10	2.14E-04	1.12E-08	0.00E-01	0.00E-01	0.00E-01	0.00E-01	0.00E-01
Y 93	1.32E-06	3.83E-01	4.85E-05	0.00E-01	0.00E-01	0.00E-01	0.00E-01	0.00E-01
ZR 95	2.77E-02	1.95E+01	1.60E-01	3.91E-02	4.21E-02	0.00E-01	0.00E-01	0.00E-01
ZR 97	7.40E-06	1.03E+00	9.44E-05	1.62E-05	1.63E-05	0.00E-01	0.00E-01	0.00E-01
NB 95	3.37E+00	4.92E+03	1.41E+01	5.82E+00	4.18E+00	0.00E-01	0.00E-01	0.00E-01
MO 99	9.71E+02	1.64E+03	0.00E-01	4.98E+03	7.44E+03	0.00E-01	0.00E-01	0.00E-01
TC 99M	1.58E-02	3.56E-01	5.95E-04	1.23E-03	1.32E-02	0.00E-01	6.41E-04	0.00E-01
TC101	4.63E-29	7.96E-28	3.72E-30	4.68E-30	5.57E-29	0.00E-01	2.55E-30	0.00E-01

DOSE TRANSFER FACTORS FOR RADIONUCLIDES IN EFFLUENT WATER

AGE = INFANT
PATHWAY = IRRIGATED STORED FEED--MILK

	TOTAL BODY	GI-LLI	BONE	LIVER	KIDNEY	THYROID	LUNG	SKIN
				(mrem gal)/(Ci min)				
RU103	6.89E-02	2.51E+00	2.06E-01	0.00E-01	4.29E-01	0.00E-01	0.00E-01	0.00E-01
RU105	5.62E-08	6.64E-05	1.67E-07	0.00E-01	1.23E-06	0.00E-01	0.00E-01	0.00E-01
RU106	5.51E-01	3.35E+01	4.41E+00	0.00E-01	5.22E+00	0.00E-01	0.00E-01	0.00E-01
AG110M	4.35E+03	3.41E+05	9.01E+03	6.58E+03	9.41E+03	0.00E-01	0.00E-01	0.00E-01
TE125M	4.90E+02	1.73E+03	3.63E+03	1.21E+03	0.00E-01	1.22E+03	0.00E-01	0.00E-01
TE127M	1.23E+03	4.10E+03	1.02E+04	3.37E+03	2.50E+04	2.94E+03	0.00E-01	0.00E-01
TE127	3.07E-02	3.00E+00	1.43E-01	4.79E-02	3.49E-01	1.16E-01	0.00E-01	0.00E-01
TE129M	2.07E+03	8.02E+03	1.34E+04	4.61E+03	3.36E+04	5.16E+03	0.00E-01	0.00E-01
TE129	8.74E-15	2.99E-12	3.74E-14	1.29E-14	9.32E-14	3.14E-14	0.00E-01	0.00E-01
TE131M	2.67E+01	5.44E+02	8.02E+01	3.23E+01	2.22E+02	6.54E+01	0.00E-01	0.00E-01
TE131	2.04E-29	2.94E-27	7.27E-29	2.69E-29	1.86E-28	6.49E-29	0.00E-01	0.00E-01
TE132	2.35E+02	9.33E+02	5.09E+02	2.52E+02	1.58E+03	3.72E+02	0.00E-01	0.00E-01
I 130	1.43E+01	7.64E+00	1.62E+01	3.57E+01	3.92E+01	4.00E+03	0.00E-01	0.00E-01
I 131	6.79E+03	5.52E+02	1.31E+04	1.54E+04	1.80E+04	5.08E+06	0.00E-01	0.00E-01
I 132	3.77E-06	8.58E-06	5.22E-06	1.06E-05	1.18E-05	4.97E-04	0.00E-01	0.00E-01
I 133	7.27E+01	4.20E+01	1.70E+02	2.48E+02	2.92E+02	4.51E+04	0.00E-01	0.00E-01
I 134	2.75E-17	7.99E-17	3.77E-17	7.73E-17	8.64E-17	1.80E-15	0.00E-01	0.00E-01
I 135	3.52E-01	3.49E-01	4.85E-01	9.65E-01	1.08E+00	8.65E+01	0.00E-01	0.00E-01
CS134	1.58E+05	4.26E+03	8.41E+05	1.57E+06	4.04E+05	0.00E-01	1.66E+05	0.00E-01
CS136	5.22E+04	2.12E+03	4.75E+04	1.40E+05	5.57E+04	0.00E-01	1.14E+04	0.00E-01
CS137	9.87E+04	4.35E+03	1.19E+06	1.39E+06	3.74E+05	0.00E-01	1.51E+05	0.00E-01
CS138	3.49E-27	1.15E-26	4.43E-27	7.21E-27	3.59E-27	0.00E-01	5.61E-28	0.00E-01
BA139	1.56E-13	3.41E-10	5.38E-12	3.57E-15	2.14E-15	0.00E-01	2.16E-15	0.00E-01
BA140	2.99E+02	1.43E+03	5.81E+03	5.81E+00	1.38E+00	0.00E-01	3.57E+00	0.00E-01
BA141	8.70E-31	3.37E-28	2.76E-29	1.89E-32	1.14E-32	0.00E-01	1.15E-32	0.00E-01
BA142	6.86E-32	5.75E-30	1.39E-30	1.16E-33	6.67E-34	0.00E-01	7.01E-34	0.00E-01
LA140	9.81E-05	4.48E+00	9.68E-04	3.81E-04	0.00E-01	0.00E-01	0.00E-01	0.00E-01
LA142	1.17E-16	8.27E-11	1.33E-15	4.87E-16	0.00E-01	0.00E-01	0.00E-01	0.00E-01
CE141	7.42E-02	3.26E+02	1.03E+00	6.30E-01	1.94E-01	0.00E-01	0.00E-01	0.00E-01
CE143	7.18E-04	3.67E+01	9.49E-03	6.30E+00	1.83E-03	0.00E-01	0.00E-01	0.00E-01
CE144	3.01E+00	3.09E+03	5.38E+01	2.20E+01	8.90E+00	0.00E-01	0.00E-01	0.00E-01
PR143	1.78E-03	1.89E+01	3.58E-02	1.34E-02	4.98E-03	0.00E-01	0.00E-01	0.00E-01
PR144	9.26E-36	3.31E-30	1.84E-34	7.11E-35	2.58E-35	0.00E-01	0.00E-01	0.00E-01
ND147	1.35E-03	1.39E+01	2.14E-02	2.20E-02	8.48E-03	0.00E-01	0.00E-01	0.00E-01
W 187	3.47E-01	5.90E+01	1.44E+00	1.00E+00	0.00E-01	0.00E-01	0.00E-01	0.00E-01
NP239	4.42E-05	2.26E+00	8.75E-04	7.83E-05	1.56E-04	0.00E-01	0.00E-01	0.00E-01

DOSE TRANSFER FACTORS FOR RADIONUCLIDES IN EFFLUENT WATER

AGE = INFANT
PATHWAY = IRRIGATED STORED FEED--MEAT

	TOTAL BODY	GI-LLI	BONE	LIVER	KIDNEY	THYROID	LUNG	SKIN
				(mrem gal)/(Ci min)				
H 3	0.00E-01	0.00E-01	0.00E-01	0.00E-01	0.00E-01	0.00E-01	0.00E-01	0.00E-01
C 14	0.00E-01	0.00E-01	0.00E-01	0.00E-01	0.00E-01	0.00E-01	0.00E-01	0.00E-01
NA 24	0.00E-01	0.00E-01	0.00E-01	0.00E-01	0.00E-01	0.00E-01	0.00E-01	0.00E-01
P 32	0.00E-01	0.00E-01	0.00E-01	0.00E-01	0.00E-01	0.00E-01	0.00E-01	0.00E-01
CR 51	0.00E-01	0.00E-01	0.00E-01	0.00E-01	0.00E-01	0.00E-01	0.00E-01	0.00E-01
MN 54	0.00E-01	0.00E-01	0.00E-01	0.00E-01	0.00E-01	0.00E-01	0.00E-01	0.00E-01
MN 56	0.00E-01	0.00E-01	0.00E-01	0.00E-01	0.00E-01	0.00E-01	0.00E-01	0.00E-01
FE 55	0.00E-01	0.00E-01	0.00E-01	0.00E-01	0.00E-01	0.00E-01	0.00E-01	0.00E-01
FE 59	0.00E-01	0.00E-01	0.00E-01	0.00E-01	0.00E-01	0.00E-01	0.00E-01	0.00E-01
CO 58	0.00E-01	0.00E-01	0.00E-01	0.00E-01	0.00E-01	0.00E-01	0.00E-01	0.00E-01
CO 60	0.00E-01	0.00E-01	0.00E-01	0.00E-01	0.00E-01	0.00E-01	0.00E-01	0.00E-01
NI 63	0.00E-01	0.00E-01	0.00E-01	0.00E-01	0.00E-01	0.00E-01	0.00E-01	0.00E-01
NI 65	0.00E-01	0.00E-01	0.00E-01	0.00E-01	0.00E-01	0.00E-01	0.00E-01	0.00E-01
CU 64	0.00E-01	0.00E-01	0.00E-01	0.00E-01	0.00E-01	0.00E-01	0.00E-01	0.00E-01
ZN 65	0.00E-01	0.00E-01	0.00E-01	0.00E-01	0.00E-01	0.00E-01	0.00E-01	0.00E-01
ZN 69	0.00E-01	0.00E-01	0.00E-01	0.00E-01	0.00E-01	0.00E-01	0.00E-01	0.00E-01
BR 83	0.00E-01	0.00E-01	0.00E-01	0.00E-01	0.00E-01	0.00E-01	0.00E-01	0.00E-01
BR 84	0.00E-01	0.00E-01	0.00E-01	0.00E-01	0.00E-01	0.00E-01	0.00E-01	0.00E-01
BR 85	0.00E-01	0.00E-01	0.00E-01	0.00E-01	0.00E-01	0.00E-01	0.00E-01	0.00E-01
RB 86	0.00E-01	0.00E-01	0.00E-01	0.00E-01	0.00E-01	0.00E-01	0.00E-01	0.00E-01
RB 88	0.00E-01	0.00E-01	0.00E-01	0.00E-01	0.00E-01	0.00E-01	0.00E-01	0.00E-01
RB 89	0.00E-01	0.00E-01	0.00E-01	0.00E-01	0.00E-01	0.00E-01	0.00E-01	0.00E-01
SR 89	0.00E-01	0.00E-01	0.00E-01	0.00E-01	0.00E-01	0.00E-01	0.00E-01	0.00E-01
SR 90	0.00E-01	0.00E-01	0.00E-01	0.00E-01	0.00E-01	0.00E-01	0.00E-01	0.00E-01
SR 91	0.00E-01	0.00E-01	0.00E-01	0.00E-01	0.00E-01	0.00E-01	0.00E-01	0.00E-01
SR 92	0.00E-01	0.00E-01	0.00E-01	0.00E-01	0.00E-01	0.00E-01	0.00E-01	0.00E-01
Y 90	0.00E-01	0.00E-01	0.00E-01	0.00E-01	0.00E-01	0.00E-01	0.00E-01	0.00E-01
Y 91M	0.00E-01	0.00E-01	0.00E-01	0.00E-01	0.00E-01	0.00E-01	0.00E-01	0.00E-01
Y 91	0.00E-01	0.00E-01	0.00E-01	0.00E-01	0.00E-01	0.00E-01	0.00E-01	0.00E-01
Y 92	0.00E-01	0.00E-01	0.00E-01	0.00E-01	0.00E-01	0.00E-01	0.00E-01	0.00E-01
Y 93	0.00E-01	0.00E-01	0.00E-01	0.00E-01	0.00E-01	0.00E-01	0.00E-01	0.00E-01
ZR 95	0.00E-01	0.00E-01	0.00E-01	0.00E-01	0.00E-01	0.00E-01	0.00E-01	0.00E-01
ZR 97	0.00E-01	0.00E-01	0.00E-01	0.00E-01	0.00E-01	0.00E-01	0.00E-01	0.00E-01
NB 95	0.00E-01	0.00E-01	0.00E-01	0.00E-01	0.00E-01	0.00E-01	0.00E-01	0.00E-01
MO 99	0.00E-01	0.00E-01	0.00E-01	0.00E-01	0.00E-01	0.00E-01	0.00E-01	0.00E-01
TC 99M	0.00E-01	0.00E-01	0.00E-01	0.00E-01	0.00E-01	0.00E-01	0.00E-01	0.00E-01
TC101	0.00E-01	0.00E-01	0.00E-01	0.00E-01	0.00E-01	0.00E-01	0.00E-01	0.00E-01

DOSE TRANSFER FACTORS FOR RADIONUCLIDES IN EFFLUENT WATER

AGE = INFANT
PATHWAY = IRRIGATED STORED FEED--MEAT

	TOTAL BODY	GI-LLI	BONE	LIVER	KIDNEY	THYROID	LUNG	SKIN
				(mrem gal)/(Ci min)				
RU103	0.00E-01	0.00E-01	0.00E-01	0.00E-01	0.00E-01	0.00E-01	0.00E-01	0.00E-01
RU105	0.00E-01	0.00E-01	0.00E-01	0.00E-01	0.00E-01	0.00E-01	0.00E-01	0.00E-01
RU106	0.00E-01	0.00E-01	0.00E-01	0.00E-01	0.00E-01	0.00E-01	0.00E-01	0.00E-01
AG110M	0.00E-01	0.00E-01	0.00E-01	0.00E-01	0.00E-01	0.00E-01	0.00E-01	0.00E-01
TE125M	0.00E-01	0.00E-01	0.00E-01	0.00E-01	0.00E-01	0.00E-01	0.00E-01	0.00E-01
TE127M	0.00E-01	0.00E-01	0.00E-01	0.00E-01	0.00E-01	0.00E-01	0.00E-01	0.00E-01
TE127	0.00E-01	0.00E-01	0.00E-01	0.00E-01	0.00E-01	0.00E-01	0.00E-01	0.00E-01
TE129M	0.00E-01	0.00E-01	0.00E-01	0.00E-01	0.00E-01	0.00E-01	0.00E-01	0.00E-01
TE129	0.00E-01	0.00E-01	0.00E-01	0.00E-01	0.00E-01	0.00E-01	0.00E-01	0.00E-01
TE131M	0.00E-01	0.00E-01	0.00E-01	0.00E-01	0.00E-01	0.00E-01	0.00E-01	0.00E-01
TE131	0.00E-01	0.00E-01	0.00E-01	0.00E-01	0.00E-01	0.00E-01	0.00E-01	0.00E-01
TE132	0.00E-01	0.00E-01	0.00E-01	0.00E-01	0.00E-01	0.00E-01	0.00E-01	0.00E-01
I 130	0.00E-01	0.00E-01	0.00E-01	0.00E-01	0.00E-01	0.00E-01	0.00E-01	0.00E-01
I 131	0.00E-01	0.00E-01	0.00E-01	0.00E-01	0.00E-01	0.00E-01	0.00E-01	0.00E-01
I 132	0.00E-01	0.00E-01	0.00E-01	0.00E-01	0.00E-01	0.00E-01	0.00E-01	0.00E-01
I 133	0.00E-01	0.00E-01	0.00E-01	0.00E-01	0.00E-01	0.00E-01	0.00E-01	0.00E-01
I 134	0.00E-01	0.00E-01	0.00E-01	0.00E-01	0.00E-01	0.00E-01	0.00E-01	0.00E-01
I 135	0.00E-01	0.00E-01	0.00E-01	0.00E-01	0.00E-01	0.00E-01	0.00E-01	0.00E-01
CS134	0.00E-01	0.00E-01	0.00E-01	0.00E-01	0.00E-01	0.00E-01	0.00E-01	0.00E-01
CS136	0.00E-01	0.00E-01	0.00E-01	0.00E-01	0.00E-01	0.00E-01	0.00E-01	0.00E-01
CS137	0.00E-01	0.00E-01	0.00E-01	0.00E-01	0.00E-01	0.00E-01	0.00E-01	0.00E-01
CS138	0.00E-01	0.00E-01	0.00E-01	0.00E-01	0.00E-01	0.00E-01	0.00E-01	0.00E-01
BA139	0.00E-01	0.00E-01	0.00E-01	0.00E-01	0.00E-01	0.00E-01	0.00E-01	0.00E-01
BA140	0.00E-01	0.00E-01	0.00E-01	0.00E-01	0.00E-01	0.00E-01	0.00E-01	0.00E-01
BA141	0.00E-01	0.00E-01	0.00E-01	0.00E-01	0.00E-01	0.00E-01	0.00E-01	0.00E-01
BA142	0.00E-01	0.00E-01	0.00E-01	0.00E-01	0.00E-01	0.00E-01	0.00E-01	0.00E-01
LA140	0.00E-01	0.00E-01	0.00E-01	0.00E-01	0.00E-01	0.00E-01	0.00E-01	0.00E-01
LA142	0.00E-01	0.00E-01	0.00E-01	0.00E-01	0.00E-01	0.00E-01	0.00E-01	0.00E-01
CE141	0.00E-01	0.00E-01	0.00E-01	0.00E-01	0.00E-01	0.00E-01	0.00E-01	0.00E-01
CE143	0.00E-01	0.00E-01	0.00E-01	0.00E-01	0.00E-01	0.00E-01	0.00E-01	0.00E-01
CE144	0.00E-01	0.00E-01	0.00E-01	0.00E-01	0.00E-01	0.00E-01	0.00E-01	0.00E-01
PR143	0.00E-01	0.00E-01	0.00E-01	0.00E-01	0.00E-01	0.00E-01	0.00E-01	0.00E-01
PR144	0.00E-01	0.00E-01	0.00E-01	0.00E-01	0.00E-01	0.00E-01	0.00E-01	0.00E-01
ND147	0.00E-01	0.00E-01	0.00E-01	0.00E-01	0.00E-01	0.00E-01	0.00E-01	0.00E-01
W 187	0.00E-01	0.00E-01	0.00E-01	0.00E-01	0.00E-01	0.00E-01	0.00E-01	0.00E-01
NP239	0.00E-01	0.00E-01	0.00E-01	0.00E-01	0.00E-01	0.00E-01	0.00E-01	0.00E-01

DOSE TRANSFER FACTORS FOR RADIONUCLIDES IN EFFLUENT WATER

AGE = INFANT
PATHWAY = ANIMAL DRINKING WATER--MILK

	TOTAL BODY	GI-LLI	BONE	LIVER	KIDNEY	THYROID	LUNG	SKIN
				(mrem gal)/(Ci min)				
H 3	1.59E+01	1.59E+01	0.00E-01	1.59E+01	1.59E+01	1.59E+01	1.59E+01	0.00E-01
C 14	6.03E+02	6.03E+02	2.83E+03	6.03E+02	6.03E+02	6.03E+02	6.03E+02	0.00E-01
NA 24	4.20E+02	4.20E+02	4.20E+02	4.20E+02	4.20E+02	4.20E+02	4.20E+02	0.00E-01
P 32	1.48E+04	5.17E+03	3.82E+05	2.25E+04	0.00E-01	0.00E-01	0.00E-01	0.00E-01
CR 51	2.93E-01	8.54E+00	0.00E-01	0.00E-01	4.17E-02	1.91E-01	3.72E-01	0.00E-01
MN 54	1.11E+01	1.81E+01	0.00E-01	4.92E+01	1.09E+01	0.00E-01	0.00E-01	0.00E-01
MN 56	6.29E-07	3.31E-04	0.00E-01	3.65E-06	3.14E-06	0.00E-01	0.00E-01	0.00E-01
FE 55	2.86E+01	1.36E+01	1.65E+02	1.07E+02	0.00E-01	0.00E-01	5.23E+01	0.00E-01
FE 59	2.45E+02	2.97E+02	3.56E+02	6.21E+02	0.00E-01	0.00E-01	1.84E+02	0.00E-01
CO 58	8.75E+01	8.74E+01	0.00E-01	3.51E+01	0.00E-01	0.00E-01	0.00E-01	0.00E-01
CO 60	2.53E+02	2.55E+02	0.00E-01	1.07E+02	0.00E-01	0.00E-01	0.00E-01	0.00E-01
NI 63	1.46E+03	1.30E+02	4.22E+04	2.61E+03	0.00E-01	0.00E-01	0.00E-01	0.00E-01
NI 65	2.26E-05	3.78E-03	4.39E-04	4.97E-05	0.00E-01	0.00E-01	0.00E-01	0.00E-01
CU 64	2.69E+00	1.19E+02	0.00E-01	5.80E+00	9.81E+00	0.00E-01	0.00E-01	0.00E-01
ZN 65	1.12E+04	2.05E+04	7.09E+03	2.43E+04	1.18E+04	0.00E-01	0.00E-01	0.00E-01
ZN 69	1.36E-15	1.49E-12	1.02E-14	1.83E-14	7.59E-15	0.00E-01	0.00E-01	0.00E-01
BR 83	1.23E-04	0.00E-01	0.00E-01	0.00E-01	0.00E-01	0.00E-01	0.00E-01	0.00E-01
BR 84	4.50E-25	0.00E-01	0.00E-01	0.00E-01	0.00E-01	0.00E-01	0.00E-01	0.00E-01
BR 85	4.22E-32	0.00E-01	0.00E-01	0.00E-01	0.00E-01	0.00E-01	0.00E-01	0.00E-01
RB 86	2.32E+04	1.20E+03	0.00E-01	4.70E+04	0.00E-01	0.00E-01	0.00E-01	0.00E-01
RB 88	6.94E-26	1.23E-25	0.00E-01	1.27E-25	0.00E-01	0.00E-01	0.00E-01	0.00E-01
RB 89	3.37E-26	1.67E-26	0.00E-01	4.89E-26	0.00E-01	0.00E-01	0.00E-01	0.00E-01
SR 89	5.56E+02	3.99E+02	1.94E+04	0.00E-01	0.00E-01	0.00E-01	0.00E-01	0.00E-01
SR 90	4.56E+03	1.84E+03	2.25E+05	0.00E-01	0.00E-01	0.00E-01	0.00E-01	0.00E-01
SR 91	4.01E-01	1.31E+01	1.11E+01	0.00E-01	0.00E-01	0.00E-01	0.00E-01	0.00E-01
SR 92	2.06E-05	5.98E-03	5.55E-04	0.00E-01	0.00E-01	0.00E-01	0.00E-01	0.00E-01
Y 90	1.36E-04	7.02E+00	5.09E-03	0.00E-01	0.00E-01	0.00E-01	0.00E-01	0.00E-01
Y 91M	3.87E-24	3.79E-19	1.14E-22	0.00E-01	0.00E-01	0.00E-01	0.00E-01	0.00E-01
Y 91	2.92E-03	7.86E+00	1.10E-01	0.00E-01	0.00E-01	0.00E-01	0.00E-01	0.00E-01
Y 92	1.50E-09	1.02E-03	5.35E-08	0.00E-01	0.00E-01	0.00E-01	0.00E-01	0.00E-01
Y 93	2.26E-06	6.56E-01	8.31E-05	0.00E-01	0.00E-01	0.00E-01	0.00E-01	0.00E-01
ZR 95	1.73E-03	1.22E+00	1.00E-02	2.44E-03	2.63E-03	0.00E-01	0.00E-01	0.00E-01
ZR 97	7.71E-06	1.08E+00	9.84E-05	1.69E-05	1.70E-05	0.00E-01	0.00E-01	0.00E-01
NB 95	2.39E-01	3.48E+02	1.00E+00	4.13E-01	2.96E-01	0.00E-01	0.00E-01	0.00E-01
MO 99	2.95E+02	4.99E+02	0.00E-01	1.51E+03	2.26E+03	0.00E-01	0.00E-01	0.00E-01
TC 99M	4.48E-02	1.01E+00	1.69E-03	3.48E-03	3.74E-02	0.00E-01	1.82E-03	0.00E-01
TC101	3.29E-27	5.64E-26	2.64E-28	3.32E-28	3.95E-27	0.00E-01	1.81E-28	0.00E-01

DOSE TRANSFER FACTORS FOR RADIONUCLIDES IN EFFLUENT WATER

AGE = INFANT
PATHWAY = ANIMAL DRINKING WATER--MILK

	TOTAL BODY	GI-LLI	BONE	LIVER	KIDNEY	THYROID	LUNG	SKIN
				(mrem gal)/(Ci min)				
RU103	4.74E-03	1.72E-01	1.42E-02	0.00E-01	2.95E-02	0.00E-01	0.00E-01	0.00E-01
RU105	2.15E-07	2.54E-04	6.40E-07	0.00E-01	4.70E-06	0.00E-01	0.00E-01	0.00E-01
RU106	2.98E-02	1.81E+00	2.38E-01	0.00E-01	2.82E-01	0.00E-01	0.00E-01	0.00E-01
AG110M	2.38E+02	1.86E+04	4.92E+02	3.59E+02	5.14E+02	0.00E-01	0.00E-01	0.00E-01
TE125M	3.05E+01	1.08E+02	2.26E+02	7.55E+01	0.00E-01	7.60E+01	0.00E-01	0.00E-01
TE127M	6.94E+01	2.31E+02	5.74E+02	1.90E+02	1.41E+03	1.66E+02	0.00E-01	0.00E-01
TE127	5.64E-02	5.51E+00	2.62E-01	8.79E-02	6.40E-01	2.14E-01	0.00E-01	0.00E-01
TE129M	1.47E+02	5.69E+02	9.52E+02	3.27E+02	2.38E+03	3.66E+02	0.00E-01	0.00E-01
TE129	1.26E-13	4.33E-11	5.41E-13	1.86E-13	1.35E-12	4.54E-13	0.00E-01	0.00E-01
TE131M	1.62E+01	3.30E+02	4.87E+01	1.96E+01	1.35E+02	3.97E+01	0.00E-01	0.00E-01
TE131	8.17E-28	1.18E-25	2.91E-27	1.08E-27	7.45E-27	2.60E-27	0.00E-01	0.00E-01
TE132	6.19E+01	2.45E+02	1.34E+02	6.63E+01	4.15E+02	9.78E+01	0.00E-01	0.00E-01
I 130	2.02E+01	1.08E+01	2.28E+01	5.02E+01	5.52E+01	5.63E+03	0.00E-01	0.00E-01
I 131	9.30E+02	7.55E+01	1.79E+03	2.11E+03	2.47E+03	6.95E+05	0.00E-01	0.00E-01
I 132	2.77E-05	6.30E-05	3.83E-05	7.78E-05	8.68E-05	3.65E-03	0.00E-01	0.00E-01
I 133	6.22E+01	3.59E+01	1.46E+02	2.12E+02	2.49E+02	3.86E+04	0.00E-01	0.00E-01
I 134	5.28E-16	1.53E-15	7.25E-16	1.48E-15	1.66E-15	3.46E-14	0.00E-01	0.00E-01
I 135	9.12E-01	9.05E-01	1.26E+00	2.50E+00	2.79E+00	2.24E+02	0.00E-01	0.00E-01
CS134	8.45E+03	2.27E+02	4.49E+04	8.37E+04	2.15E+04	0.00E-01	8.83E+03	0.00E-01
CS136	5.39E+03	2.19E+02	4.91E+03	1.44E+04	5.76E+03	0.00E-01	1.18E+03	0.00E-01
CS137	5.16E+03	2.28E+02	6.22E+04	7.28E+04	1.95E+04	0.00E-01	7.92E+03	0.00E-01
CS138	1.09E-25	3.60E-25	1.38E-25	2.25E-25	1.12E-25	0.00E-01	1.75E-26	0.00E-01
BA139	1.91E-12	4.17E-09	6.59E-11	4.37E-14	2.63E-14	0.00E-01	2.65E-14	0.00E-01
BA140	3.14E+01	1.49E+02	6.08E+02	6.08E-01	1.45E-01	0.00E-01	3.74E-01	0.00E-01
BA141	4.79E-29	1.86E-26	1.52E-27	1.04E-30	6.26E-31	0.00E-01	6.33E-31	0.00E-01
BA142	6.46E-30	5.41E-28	1.31E-28	1.09E-31	6.28E-32	0.00E-01	6.60E-32	0.00E-01
LA140	4.57E-05	2.09E+00	4.51E-04	1.78E-04	0.00E-01	0.00E-01	0.00E-01	0.00E-01
LA142	1.28E-15	9.04E-10	1.45E-14	5.33E-15	0.00E-01	0.00E-01	0.00E-01	0.00E-01
CE141	5.37E-03	2.36E+01	7.49E-02	4.57E-02	1.41E-02	0.00E-01	0.00E-01	0.00E-01
CE143	3.99E-04	2.04E+01	5.28E-03	3.50E+00	1.02E-03	0.00E-01	0.00E-01	0.00E-01
CE144	1.65E-01	1.69E+02	2.95E+00	1.21E+00	4.87E-01	0.00E-01	0.00E-01	0.00E-01
PR143	1.80E-04	1.92E+00	3.64E-03	1.36E-03	5.06E-04	0.00E-01	0.00E-01	0.00E-01
PR144	5.40E-34	1.93E-28	1.07E-32	4.15E-33	1.50E-33	0.00E-01	0.00E-01	0.00E-01
ND147	1.52E-04	1.57E+00	2.42E-03	2.48E-03	9.58E-04	0.00E-01	0.00E-01	0.00E-01
W 187	2.61E-01	4.43E+01	1.08E+00	7.54E-01	0.00E-01	0.00E-01	0.00E-01	0.00E-01
NP239	1.53E-05	7.83E-01	3.03E-04	2.71E-05	5.40E-05	0.00E-01	0.00E-01	0.00E-01

DOSE TRANSFER FACTORS FOR RADIONUCLIDES IN EFFLUENT WATER

AGE = INFANT
PATHWAY = ANIMAL DRINKING WATER--MEAT

	TOTAL BODY	GI-LLI	BONE	LIVER	KIDNEY	THYROID	LUNG	SKIN
				(mrem gal)/(Ci min)				
H 3	0.00E-01	0.00E-01	0.00E-01	0.00E-01	0.00E-01	0.00E-01	0.00E-01	0.00E-01
C 14	0.00E-01	0.00E-01	0.00E-01	0.00E-01	0.00E-01	0.00E-01	0.00E-01	0.00E-01
NA 24	0.00E-01	0.00E-01	0.00E-01	0.00E-01	0.00E-01	0.00E-01	0.00E-01	0.00E-01
P 32	0.00E-01	0.00E-01	0.00E-01	0.00E-01	0.00E-01	0.00E-01	0.00E-01	0.00E-01
CR 51	0.00E-01	0.00E-01	0.00E-01	0.00E-01	0.00E-01	0.00E-01	0.00E-01	0.00E-01
MN 54	0.00E-01	0.00E-01	0.00E-01	0.00E-01	0.00E-01	0.00E-01	0.00E-01	0.00E-01
MN 56	0.00E-01	0.00E-01	0.00E-01	0.00E-01	0.00E-01	0.00E-01	0.00E-01	0.00E-01
FE 55	0.00E-01	0.00E-01	0.00E-01	0.00E-01	0.00E-01	0.00E-01	0.00E-01	0.00E-01
FE 59	0.00E-01	0.00E-01	0.00E-01	0.00E-01	0.00E-01	0.00E-01	0.00E-01	0.00E-01
CO 58	0.00E-01	0.00E-01	0.00E-01	0.00E-01	0.00E-01	0.00E-01	0.00E-01	0.00E-01
CO 60	0.00E-01	0.00E-01	0.00E-01	0.00E-01	0.00E-01	0.00E-01	0.00E-01	0.00E-01
NI 63	0.00E-01	0.00E-01	0.00E-01	0.00E-01	0.00E-01	0.00E-01	0.00E-01	0.00E-01
NI 65	0.00E-01	0.00E-01	0.00E-01	0.00E-01	0.00E-01	0.00E-01	0.00E-01	0.00E-01
CU 64	0.00E-01	0.00E-01	0.00E-01	0.00E-01	0.00E-01	0.00E-01	0.00E-01	0.00E-01
ZN 65	0.00E-01	0.00E-01	0.00E-01	0.00E-01	0.00E-01	0.00E-01	0.00E-01	0.00E-01
ZN 69	0.00E-01	0.00E-01	0.00E-01	0.00E-01	0.00E-01	0.00E-01	0.00E-01	0.00E-01
BR 83	0.00E-01	0.00E-01	0.00E-01	0.00E-01	0.00E-01	0.00E-01	0.00E-01	0.00E-01
BR 84	0.00E-01	0.00E-01	0.00E-01	0.00E-01	0.00E-01	0.00E-01	0.00E-01	0.00E-01
BR 85	0.00E-01	0.00E-01	0.00E-01	0.00E-01	0.00E-01	0.00E-01	0.00E-01	0.00E-01
RB 86	0.00E-01	0.00E-01	0.00E-01	0.00E-01	0.00E-01	0.00E-01	0.00E-01	0.00E-01
RB 88	0.00E-01	0.00E-01	0.00E-01	0.00E-01	0.00E-01	0.00E-01	0.00E-01	0.00E-01
RB 89	0.00E-01	0.00E-01	0.00E-01	0.00E-01	0.00E-01	0.00E-01	0.00E-01	0.00E-01
SR 89	0.00E-01	0.00E-01	0.00E-01	0.00E-01	0.00E-01	0.00E-01	0.00E-01	0.00E-01
SR 90	0.00E-01	0.00E-01	0.00E-01	0.00E-01	0.00E-01	0.00E-01	0.00E-01	0.00E-01
SR 91	0.00E-01	0.00E-01	0.00E-01	0.00E-01	0.00E-01	0.00E-01	0.00E-01	0.00E-01
SR 92	0.00E-01	0.00E-01	0.00E-01	0.00E-01	0.00E-01	0.00E-01	0.00E-01	0.00E-01
Y 90	0.00E-01	0.00E-01	0.00E-01	0.00E-01	0.00E-01	0.00E-01	0.00E-01	0.00E-01
Y 91M	0.00E-01	0.00E-01	0.00E-01	0.00E-01	0.00E-01	0.00E-01	0.00E-01	0.00E-01
Y 91	0.00E-01	0.00E-01	0.00E-01	0.00E-01	0.00E-01	0.00E-01	0.00E-01	0.00E-01
Y 92	0.00E-01	0.00E-01	0.00E-01	0.00E-01	0.00E-01	0.00E-01	0.00E-01	0.00E-01
Y 93	0.00E-01	0.00E-01	0.00E-01	0.00E-01	0.00E-01	0.00E-01	0.00E-01	0.00E-01
ZR 95	0.00E-01	0.00E-01	0.00E-01	0.00E-01	0.00E-01	0.00E-01	0.00E-01	0.00E-01
ZR 97	0.00E-01	0.00E-01	0.00E-01	0.00E-01	0.00E-01	0.00E-01	0.00E-01	0.00E-01
NB 95	0.00E-01	0.00E-01	0.00E-01	0.00E-01	0.00E-01	0.00E-01	0.00E-01	0.00E-01
MO 99	0.00E-01	0.00E-01	0.00E-01	0.00E-01	0.00E-01	0.00E-01	0.00E-01	0.00E-01
TC 99M	0.00E-01	0.00E-01	0.00E-01	0.00E-01	0.00E-01	0.00E-01	0.00E-01	0.00E-01
TC101	0.00E-01	0.00E-01	0.00E-01	0.00E-01	0.00E-01	0.00E-01	0.00E-01	0.00E-01

DOSE TRANSFER FACTORS FOR RADIONUCLIDES IN EFFLUENT WATER

AGE = INFANT
PATHWAY = ANIMAL DRINKING WATER--MEAT

	TOTAL BODY	GI-LLI	BONE	LIVER	KIDNEY	THYROID	LUNG	SKIN
				(mrem gal)/(Ci min)				
RU103	0.00E-01	0.00E-01	0.00E-01	0.00E-01	0.00E-01	0.00E-01	0.00E-01	0.00E-01
RU105	0.00E-01	0.00E-01	0.00E-01	0.00E-01	0.00E-01	0.00E-01	0.00E-01	0.00E-01
RU106	0.00E-01	0.00E-01	0.00E-01	0.00E-01	0.00E-01	0.00E-01	0.00E-01	0.00E-01
AG110M	0.00E-01	0.00E-01	0.00E-01	0.00E-01	0.00E-01	0.00E-01	0.00E-01	0.00E-01
TE125M	0.00E-01	0.00E-01	0.00E-01	0.00E-01	0.00E-01	0.00E-01	0.00E-01	0.00E-01
TE127M	0.00E-01	0.00E-01	0.00E-01	0.00E-01	0.00E-01	0.00E-01	0.00E-01	0.00E-01
TE127	0.00E-01	0.00E-01	0.00E-01	0.00E-01	0.00E-01	0.00E-01	0.00E-01	0.00E-01
TE129M	0.00E-01	0.00E-01	0.00E-01	0.00E-01	0.00E-01	0.00E-01	0.00E-01	0.00E-01
TE129	0.00E-01	0.00E-01	0.00E-01	0.00E-01	0.00E-01	0.00E-01	0.00E-01	0.00E-01
TE131M	0.00E-01	0.00E-01	0.00E-01	0.00E-01	0.00E-01	0.00E-01	0.00E-01	0.00E-01
TE131	0.00E-01	0.00E-01	0.00E-01	0.00E-01	0.00E-01	0.00E-01	0.00E-01	0.00E-01
TE132	0.00E-01	0.00E-01	0.00E-01	0.00E-01	0.00E-01	0.00E-01	0.00E-01	0.00E-01
I 130	0.00E-01	0.00E-01	0.00E-01	0.00E-01	0.00E-01	0.00E-01	0.00E-01	0.00E-01
I 131	0.00E-01	0.00E-01	0.00E-01	0.00E-01	0.00E-01	0.00E-01	0.00E-01	0.00E-01
I 132	0.00E-01	0.00E-01	0.00E-01	0.00E-01	0.00E-01	0.00E-01	0.00E-01	0.00E-01
I 133	0.00E-01	0.00E-01	0.00E-01	0.00E-01	0.00E-01	0.00E-01	0.00E-01	0.00E-01
I 134	0.00E-01	0.00E-01	0.00E-01	0.00E-01	0.00E-01	0.00E-01	0.00E-01	0.00E-01
I 135	0.00E-01	0.00E-01	0.00E-01	0.00E-01	0.00E-01	0.00E-01	0.00E-01	0.00E-01
CS134	0.00E-01	0.00E-01	0.00E-01	0.00E-01	0.00E-01	0.00E-01	0.00E-01	0.00E-01
CS136	0.00E-01	0.00E-01	0.00E-01	0.00E-01	0.00E-01	0.00E-01	0.00E-01	0.00E-01
CS137	0.00E-01	0.00E-01	0.00E-01	0.00E-01	0.00E-01	0.00E-01	0.00E-01	0.00E-01
CS138	0.00E-01	0.00E-01	0.00E-01	0.00E-01	0.00E-01	0.00E-01	0.00E-01	0.00E-01
BA139	0.00E-01	0.00E-01	0.00E-01	0.00E-01	0.00E-01	0.00E-01	0.00E-01	0.00E-01
BA140	0.00E-01	0.00E-01	0.00E-01	0.00E-01	0.00E-01	0.00E-01	0.00E-01	0.00E-01
BA141	0.00E-01	0.00E-01	0.00E-01	0.00E-01	0.00E-01	0.00E-01	0.00E-01	0.00E-01
BA142	0.00E-01	0.00E-01	0.00E-01	0.00E-01	0.00E-01	0.00E-01	0.00E-01	0.00E-01
LA140	0.00E-01	0.00E-01	0.00E-01	0.00E-01	0.00E-01	0.00E-01	0.00E-01	0.00E-01
LA142	0.00E-01	0.00E-01	0.00E-01	0.00E-01	0.00E-01	0.00E-01	0.00E-01	0.00E-01
CE141	0.00E-01	0.00E-01	0.00E-01	0.00E-01	0.00E-01	0.00E-01	0.00E-01	0.00E-01
CE143	0.00E-01	0.00E-01	0.00E-01	0.00E-01	0.00E-01	0.00E-01	0.00E-01	0.00E-01
CE144	0.00E-01	0.00E-01	0.00E-01	0.00E-01	0.00E-01	0.00E-01	0.00E-01	0.00E-01
PR143	0.00E-01	0.00E-01	0.00E-01	0.00E-01	0.00E-01	0.00E-01	0.00E-01	0.00E-01
PR144	0.00E-01	0.00E-01	0.00E-01	0.00E-01	0.00E-01	0.00E-01	0.00E-01	0.00E-01
ND147	0.00E-01	0.00E-01	0.00E-01	0.00E-01	0.00E-01	0.00E-01	0.00E-01	0.00E-01
W 187	0.00E-01	0.00E-01	0.00E-01	0.00E-01	0.00E-01	0.00E-01	0.00E-01	0.00E-01
NP239	0.00E-01	0.00E-01	0.00E-01	0.00E-01	0.00E-01	0.00E-01	0.00E-01	0.00E-01

DOSE TRANSFER FACTORS FOR RADIONUCLIDES IN EFFLUENT WATER

AGE = INFANT
PATHWAY = RIVER SHORELINE DEPOSITS

	TOTAL BODY	GI-LLI	BONE	LIVER	KIDNEY	THYROID	LUNG	SKIN
				(mrem gal)/(Ci min)				
H 3	0.00E-01	0.00E-01	0.00E-01	0.00E-01	0.00E-01	0.00E-01	0.00E-01	0.00E-01
C 14	0.00E-01	0.00E-01	0.00E-01	0.00E-01	0.00E-01	0.00E-01	0.00E-01	0.00E-01
NA 24	0.00E-01	0.00E-01	0.00E-01	0.00E-01	0.00E-01	0.00E-01	0.00E-01	0.00E-01
P 32	0.00E-01	0.00E-01	0.00E-01	0.00E-01	0.00E-01	0.00E-01	0.00E-01	0.00E-01
CR 51	0.00E-01	0.00E-01	0.00E-01	0.00E-01	0.00E-01	0.00E-01	0.00E-01	0.00E-01
MN 54	0.00E-01	0.00E-01	0.00E-01	0.00E-01	0.00E-01	0.00E-01	0.00E-01	0.00E-01
MN 56	0.00E-01	0.00E-01	0.00E-01	0.00E-01	0.00E-01	0.00E-01	0.00E-01	0.00E-01
FE 55	0.00E-01	0.00E-01	0.00E-01	0.00E-01	0.00E-01	0.00E-01	0.00E-01	0.00E-01
FE 59	0.00E-01	0.00E-01	0.00E-01	0.00E-01	0.00E-01	0.00E-01	0.00E-01	0.00E-01
CO 58	0.00E-01	0.00E-01	0.00E-01	0.00E-01	0.00E-01	0.00E-01	0.00E-01	0.00E-01
CO 60	0.00E-01	0.00E-01	0.00E-01	0.00E-01	0.00E-01	0.00E-01	0.00E-01	0.00E-01
NI 63	0.00E-01	0.00E-01	0.00E-01	0.00E-01	0.00E-01	0.00E-01	0.00E-01	0.00E-01
NI 65	0.00E-01	0.00E-01	0.00E-01	0.00E-01	0.00E-01	0.00E-01	0.00E-01	0.00E-01
CU 64	0.00E-01	0.00E-01	0.00E-01	0.00E-01	0.00E-01	0.00E-01	0.00E-01	0.00E-01
ZN 65	0.00E-01	0.00E-01	0.00E-01	0.00E-01	0.00E-01	0.00E-01	0.00E-01	0.00E-01
ZN 69	0.00E-01	0.00E-01	0.00E-01	0.00E-01	0.00E-01	0.00E-01	0.00E-01	0.00E-01
BR 83	0.00E-01	0.00E-01	0.00E-01	0.00E-01	0.00E-01	0.00E-01	0.00E-01	0.00E-01
BR 84	0.00E-01	0.00E-01	0.00E-01	0.00E-01	0.00E-01	0.00E-01	0.00E-01	0.00E-01
BR 85	0.00E-01	0.00E-01	0.00E-01	0.00E-01	0.00E-01	0.00E-01	0.00E-01	0.00E-01
RB 86	0.00E-01	0.00E-01	0.00E-01	0.00E-01	0.00E-01	0.00E-01	0.00E-01	0.00E-01
RB 88	0.00E-01	0.00E-01	0.00E-01	0.00E-01	0.00E-01	0.00E-01	0.00E-01	0.00E-01
RB 89	0.00E-01	0.00E-01	0.00E-01	0.00E-01	0.00E-01	0.00E-01	0.00E-01	0.00E-01
SR 89	0.00E-01	0.00E-01	0.00E-01	0.00E-01	0.00E-01	0.00E-01	0.00E-01	0.00E-01
SR 90	0.00E-01	0.00E-01	0.00E-01	0.00E-01	0.00E-01	0.00E-01	0.00E-01	0.00E-01
SR 91	0.00E-01	0.00E-01	0.00E-01	0.00E-01	0.00E-01	0.00E-01	0.00E-01	0.00E-01
SR 92	0.00E-01	0.00E-01	0.00E-01	0.00E-01	0.00E-01	0.00E-01	0.00E-01	0.00E-01
Y 90	0.00E-01	0.00E-01	0.00E-01	0.00E-01	0.00E-01	0.00E-01	0.00E-01	0.00E-01
Y 91M	0.00E-01	0.00E-01	0.00E-01	0.00E-01	0.00E-01	0.00E-01	0.00E-01	0.00E-01
Y 91	0.00E-01	0.00E-01	0.00E-01	0.00E-01	0.00E-01	0.00E-01	0.00E-01	0.00E-01
Y 92	0.00E-01	0.00E-01	0.00E-01	0.00E-01	0.00E-01	0.00E-01	0.00E-01	0.00E-01
Y 93	0.00E-01	0.00E-01	0.00E-01	0.00E-01	0.00E-01	0.00E-01	0.00E-01	0.00E-01
ZR 95	0.00E-01	0.00E-01	0.00E-01	0.00E-01	0.00E-01	0.00E-01	0.00E-01	0.00E-01
ZR 97	0.00E-01	0.00E-01	0.00E-01	0.00E-01	0.00E-01	0.00E-01	0.00E-01	0.00E-01
NB 95	0.00E-01	0.00E-01	0.00E-01	0.00E-01	0.00E-01	0.00E-01	0.00E-01	0.00E-01
MO 99	0.00E-01	0.00E-01	0.00E-01	0.00E-01	0.00E-01	0.00E-01	0.00E-01	0.00E-01
TC 99M	0.00E-01	0.00E-01	0.00E-01	0.00E-01	0.00E-01	0.00E-01	0.00E-01	0.00E-01
TC101	0.00E-01	0.00E-01	0.00E-01	0.00E-01	0.00E-01	0.00E-01	0.00E-01	0.00E-01

DOSE TRANSFER FACTORS FOR RADIONUCLIDES IN EFFLUENT WATER

AGE = INFANT
PATHWAY = RIVER SHORELINE DEPOSITS

	TOTAL BODY	GI-LLI	BONE	LIVER	KIDNEY	THYROID	LUNG	SKIN
				(mrem gal)/(Ci min)				
RU103	0.00E-01	0.00E-01	0.00E-01	0.00E-01	0.00E-01	0.00E-01	0.00E-01	0.00E-01
RU105	0.00E-01	0.00E-01	0.00E-01	0.00E-01	0.00E-01	0.00E-01	0.00E-01	0.00E-01
RU106	0.00E-01	0.00E-01	0.00E-01	0.00E-01	0.00E-01	0.00E-01	0.00E-01	0.00E-01
AG110M	0.00E-01	0.00E-01	0.00E-01	0.00E-01	0.00E-01	0.00E-01	0.00E-01	0.00E-01
TE125M	0.00E-01	0.00E-01	0.00E-01	0.00E-01	0.00E-01	0.00E-01	0.00E-01	0.00E-01
TE127M	0.00E-01	0.00E-01	0.00E-01	0.00E-01	0.00E-01	0.00E-01	0.00E-01	0.00E-01
TE127	0.00E-01	0.00E-01	0.00E-01	0.00E-01	0.00E-01	0.00E-01	0.00E-01	0.00E-01
TE129M	0.00E-01	0.00E-01	0.00E-01	0.00E-01	0.00E-01	0.00E-01	0.00E-01	0.00E-01
TE129	0.00E-01	0.00E-01	0.00E-01	0.00E-01	0.00E-01	0.00E-01	0.00E-01	0.00E-01
TE131M	0.00E-01	0.00E-01	0.00E-01	0.00E-01	0.00E-01	0.00E-01	0.00E-01	0.00E-01
TE131	0.00E-01	0.00E-01	0.00E-01	0.00E-01	0.00E-01	0.00E-01	0.00E-01	0.00E-01
TE132	0.00E-01	0.00E-01	0.00E-01	0.00E-01	0.00E-01	0.00E-01	0.00E-01	0.00E-01
I 130	0.00E-01	0.00E-01	0.00E-01	0.00E-01	0.00E-01	0.00E-01	0.00E-01	0.00E-01
I 131	0.00E-01	0.00E-01	0.00E-01	0.00E-01	0.00E-01	0.00E-01	0.00E-01	0.00E-01
I 132	0.00E-01	0.00E-01	0.00E-01	0.00E-01	0.00E-01	0.00E-01	0.00E-01	0.00E-01
I 133	0.00E-01	0.00E-01	0.00E-01	0.00E-01	0.00E-01	0.00E-01	0.00E-01	0.00E-01
I 134	0.00E-01	0.00E-01	0.00E-01	0.00E-01	0.00E-01	0.00E-01	0.00E-01	0.00E-01
I 135	0.00E-01	0.00E-01	0.00E-01	0.00E-01	0.00E-01	0.00E-01	0.00E-01	0.00E-01
CS134	0.00E-01	0.00E-01	0.00E-01	0.00E-01	0.00E-01	0.00E-01	0.00E-01	0.00E-01
CS136	0.00E-01	0.00E-01	0.00E-01	0.00E-01	0.00E-01	0.00E-01	0.00E-01	0.00E-01
CS137	0.00E-01	0.00E-01	0.00E-01	0.00E-01	0.00E-01	0.00E-01	0.00E-01	0.00E-01
CS138	0.00E-01	0.00E-01	0.00E-01	0.00E-01	0.00E-01	0.00E-01	0.00E-01	0.00E-01
BA139	0.00E-01	0.00E-01	0.00E-01	0.00E-01	0.00E-01	0.00E-01	0.00E-01	0.00E-01
BA140	0.00E-01	0.00E-01	0.00E-01	0.00E-01	0.00E-01	0.00E-01	0.00E-01	0.00E-01
BA141	0.00E-01	0.00E-01	0.00E-01	0.00E-01	0.00E-01	0.00E-01	0.00E-01	0.00E-01
BA142	0.00E-01	0.00E-01	0.00E-01	0.00E-01	0.00E-01	0.00E-01	0.00E-01	0.00E-01
LA140	0.00E-01	0.00E-01	0.00E-01	0.00E-01	0.00E-01	0.00E-01	0.00E-01	0.00E-01
LA142	0.00E-01	0.00E-01	0.00E-01	0.00E-01	0.00E-01	0.00E-01	0.00E-01	0.00E-01
CE141	0.00E-01	0.00E-01	0.00E-01	0.00E-01	0.00E-01	0.00E-01	0.00E-01	0.00E-01
CE143	0.00E-01	0.00E-01	0.00E-01	0.00E-01	0.00E-01	0.00E-01	0.00E-01	0.00E-01
CE144	0.00E-01	0.00E-01	0.00E-01	0.00E-01	0.00E-01	0.00E-01	0.00E-01	0.00E-01
PR143	0.00E-01	0.00E-01	0.00E-01	0.00E-01	0.00E-01	0.00E-01	0.00E-01	0.00E-01
PR144	0.00E-01	0.00E-01	0.00E-01	0.00E-01	0.00E-01	0.00E-01	0.00E-01	0.00E-01
ND147	0.00E-01	0.00E-01	0.00E-01	0.00E-01	0.00E-01	0.00E-01	0.00E-01	0.00E-01
W 187	0.00E-01	0.00E-01	0.00E-01	0.00E-01	0.00E-01	0.00E-01	0.00E-01	0.00E-01
NP239	0.00E-01	0.00E-01	0.00E-01	0.00E-01	0.00E-01	0.00E-01	0.00E-01	0.00E-01

DOSE TRANSFER FACTORS FOR RADIONUCLIDES IN EFFLUENT WATER

AGE = INFANT
PATHWAY = SWIMMING

	TOTAL BODY	GI-LLI	BONE	LIVER	KIDNEY	THYROID	LUNG	SKIN
				(mrem gal)/(Ci min)				
H 3	0.00E-01	0.00E-01	0.00E-01	0.00E-01	0.00E-01	0.00E-01	0.00E-01	0.00E-01
C 14	0.00E-01	0.00E-01	0.00E-01	0.00E-01	0.00E-01	0.00E-01	0.00E-01	0.00E-01
NA 24	0.00E-01	0.00E-01	0.00E-01	0.00E-01	0.00E-01	0.00E-01	0.00E-01	0.00E-01
P 32	0.00E-01	0.00E-01	0.00E-01	0.00E-01	0.00E-01	0.00E-01	0.00E-01	0.00E-01
CR 51	0.00E-01	0.00E-01	0.00E-01	0.00E-01	0.00E-01	0.00E-01	0.00E-01	0.00E-01
MN 54	0.00E-01	0.00E-01	0.00E-01	0.00E-01	0.00E-01	0.00E-01	0.00E-01	0.00E-01
MN 56	0.00E-01	0.00E-01	0.00E-01	0.00E-01	0.00E-01	0.00E-01	0.00E-01	0.00E-01
FE 55	0.00E-01	0.00E-01	0.00E-01	0.00E-01	0.00E-01	0.00E-01	0.00E-01	0.00E-01
FE 59	0.00E-01	0.00E-01	0.00E-01	0.00E-01	0.00E-01	0.00E-01	0.00E-01	0.00E-01
CO 58	0.00E-01	0.00E-01	0.00E-01	0.00E-01	0.00E-01	0.00E-01	0.00E-01	0.00E-01
CO 60	0.00E-01	0.00E-01	0.00E-01	0.00E-01	0.00E-01	0.00E-01	0.00E-01	0.00E-01
NI 63	0.00E-01	0.00E-01	0.00E-01	0.00E-01	0.00E-01	0.00E-01	0.00E-01	0.00E-01
NI 65	0.00E-01	0.00E-01	0.00E-01	0.00E-01	0.00E-01	0.00E-01	0.00E-01	0.00E-01
CU 64	0.00E-01	0.00E-01	0.00E-01	0.00E-01	0.00E-01	0.00E-01	0.00E-01	0.00E-01
ZN 65	0.00E-01	0.00E-01	0.00E-01	0.00E-01	0.00E-01	0.00E-01	0.00E-01	0.00E-01
ZN 69	0.00E-01	0.00E-01	0.00E-01	0.00E-01	0.00E-01	0.00E-01	0.00E-01	0.00E-01
BR 83	0.00E-01	0.00E-01	0.00E-01	0.00E-01	0.00E-01	0.00E-01	0.00E-01	0.00E-01
BR 84	0.00E-01	0.00E-01	0.00E-01	0.00E-01	0.00E-01	0.00E-01	0.00E-01	0.00E-01
BR 85	0.00E-01	0.00E-01	0.00E-01	0.00E-01	0.00E-01	0.00E-01	0.00E-01	0.00E-01
RB 86	0.00E-01	0.00E-01	0.00E-01	0.00E-01	0.00E-01	0.00E-01	0.00E-01	0.00E-01
RB 88	0.00E-01	0.00E-01	0.00E-01	0.00E-01	0.00E-01	0.00E-01	0.00E-01	0.00E-01
RB 89	0.00E-01	0.00E-01	0.00E-01	0.00E-01	0.00E-01	0.00E-01	0.00E-01	0.00E-01
SR 89	0.00E-01	0.00E-01	0.00E-01	0.00E-01	0.00E-01	0.00E-01	0.00E-01	0.00E-01
SR 90	0.00E-01	0.00E-01	0.00E-01	0.00E-01	0.00E-01	0.00E-01	0.00E-01	0.00E-01
SR 91	0.00E-01	0.00E-01	0.00E-01	0.00E-01	0.00E-01	0.00E-01	0.00E-01	0.00E-01
SR 92	0.00E-01	0.00E-01	0.00E-01	0.00E-01	0.00E-01	0.00E-01	0.00E-01	0.00E-01
Y 90	0.00E-01	0.00E-01	0.00E-01	0.00E-01	0.00E-01	0.00E-01	0.00E-01	0.00E-01
Y 91M	0.00E-01	0.00E-01	0.00E-01	0.00E-01	0.00E-01	0.00E-01	0.00E-01	0.00E-01
Y 91	0.00E-01	0.00E-01	0.00E-01	0.00E-01	0.00E-01	0.00E-01	0.00E-01	0.00E-01
Y 92	0.00E-01	0.00E-01	0.00E-01	0.00E-01	0.00E-01	0.00E-01	0.00E-01	0.00E-01
Y 93	0.00E-01	0.00E-01	0.00E-01	0.00E-01	0.00E-01	0.00E-01	0.00E-01	0.00E-01
ZR 95	0.00E-01	0.00E-01	0.00E-01	0.00E-01	0.00E-01	0.00E-01	0.00E-01	0.00E-01
ZR 97	0.00E-01	0.00E-01	0.00E-01	0.00E-01	0.00E-01	0.00E-01	0.00E-01	0.00E-01
NB 95	0.00E-01	0.00E-01	0.00E-01	0.00E-01	0.00E-01	0.00E-01	0.00E-01	0.00E-01
MO 99	0.00E-01	0.00E-01	0.00E-01	0.00E-01	0.00E-01	0.00E-01	0.00E-01	0.00E-01
TC 99M	0.00E-01	0.00E-01	0.00E-01	0.00E-01	0.00E-01	0.00E-01	0.00E-01	0.00E-01
TC101	0.00E-01	0.00E-01	0.00E-01	0.00E-01	0.00E-01	0.00E-01	0.00E-01	0.00E-01

DOSE TRANSFER FACTORS FOR RADIONUCLIDES IN EFFLUENT WATER

AGE = INFANT
PATHWAY = SWIMMING

	TOTAL BODY	GI-LLI	BONE	LIVER	KIDNEY	THYROID	LUNG	SKIN
				(mrem gal)/(Ci min)				
RU103	0.00E-01	0.00E-01	0.00E-01	0.00E-01	0.00E-01	0.00E-01	0.00E-01	0.00E-01
RU105	0.00E-01	0.00E-01	0.00E-01	0.00E-01	0.00E-01	0.00E-01	0.00E-01	0.00E-01
RU106	0.00E-01	0.00E-01	0.00E-01	0.00E-01	0.00E-01	0.00E-01	0.00E-01	0.00E-01
AG110M	0.00E-01	0.00E-01	0.00E-01	0.00E-01	0.00E-01	0.00E-01	0.00E-01	0.00E-01
TE125M	0.00E-01	0.00E-01	0.00E-01	0.00E-01	0.00E-01	0.00E-01	0.00E-01	0.00E-01
TE127M	0.00E-01	0.00E-01	0.00E-01	0.00E-01	0.00E-01	0.00E-01	0.00E-01	0.00E-01
TE127	0.00E-01	0.00E-01	0.00E-01	0.00E-01	0.00E-01	0.00E-01	0.00E-01	0.00E-01
TE129M	0.00E-01	0.00E-01	0.00E-01	0.00E-01	0.00E-01	0.00E-01	0.00E-01	0.00E-01
TE129	0.00E-01	0.00E-01	0.00E-01	0.00E-01	0.00E-01	0.00E-01	0.00E-01	0.00E-01
TE131M	0.00E-01	0.00E-01	0.00E-01	0.00E-01	0.00E-01	0.00E-01	0.00E-01	0.00E-01
TE131	0.00E-01	0.00E-01	0.00E-01	0.00E-01	0.00E-01	0.00E-01	0.00E-01	0.00E-01
TE132	0.00E-01	0.00E-01	0.00E-01	0.00E-01	0.00E-01	0.00E-01	0.00E-01	0.00E-01
I 130	0.00E-01	0.00E-01	0.00E-01	0.00E-01	0.00E-01	0.00E-01	0.00E-01	0.00E-01
I 131	0.00E-01	0.00E-01	0.00E-01	0.00E-01	0.00E-01	0.00E-01	0.00E-01	0.00E-01
I 132	0.00E-01	0.00E-01	0.00E-01	0.00E-01	0.00E-01	0.00E-01	0.00E-01	0.00E-01
I 133	0.00E-01	0.00E-01	0.00E-01	0.00E-01	0.00E-01	0.00E-01	0.00E-01	0.00E-01
I 134	0.00E-01	0.00E-01	0.00E-01	0.00E-01	0.00E-01	0.00E-01	0.00E-01	0.00E-01
I 135	0.00E-01	0.00E-01	0.00E-01	0.00E-01	0.00E-01	0.00E-01	0.00E-01	0.00E-01
CS134	0.00E-01	0.00E-01	0.00E-01	0.00E-01	0.00E-01	0.00E-01	0.00E-01	0.00E-01
CS136	0.00E-01	0.00E-01	0.00E-01	0.00E-01	0.00E-01	0.00E-01	0.00E-01	0.00E-01
CS137	0.00E-01	0.00E-01	0.00E-01	0.00E-01	0.00E-01	0.00E-01	0.00E-01	0.00E-01
CS138	0.00E-01	0.00E-01	0.00E-01	0.00E-01	0.00E-01	0.00E-01	0.00E-01	0.00E-01
BA139	0.00E-01	0.00E-01	0.00E-01	0.00E-01	0.00E-01	0.00E-01	0.00E-01	0.00E-01
BA140	0.00E-01	0.00E-01	0.00E-01	0.00E-01	0.00E-01	0.00E-01	0.00E-01	0.00E-01
BA141	0.00E-01	0.00E-01	0.00E-01	0.00E-01	0.00E-01	0.00E-01	0.00E-01	0.00E-01
BA142	0.00E-01	0.00E-01	0.00E-01	0.00E-01	0.00E-01	0.00E-01	0.00E-01	0.00E-01
LA140	0.00E-01	0.00E-01	0.00E-01	0.00E-01	0.00E-01	0.00E-01	0.00E-01	0.00E-01
LA142	0.00E-01	0.00E-01	0.00E-01	0.00E-01	0.00E-01	0.00E-01	0.00E-01	0.00E-01
CE141	0.00E-01	0.00E-01	0.00E-01	0.00E-01	0.00E-01	0.00E-01	0.00E-01	0.00E-01
CE143	0.00E-01	0.00E-01	0.00E-01	0.00E-01	0.00E-01	0.00E-01	0.00E-01	0.00E-01
CE144	0.00E-01	0.00E-01	0.00E-01	0.00E-01	0.00E-01	0.00E-01	0.00E-01	0.00E-01
PR143	0.00E-01	0.00E-01	0.00E-01	0.00E-01	0.00E-01	0.00E-01	0.00E-01	0.00E-01
PR144	0.00E-01	0.00E-01	0.00E-01	0.00E-01	0.00E-01	0.00E-01	0.00E-01	0.00E-01
ND147	0.00E-01	0.00E-01	0.00E-01	0.00E-01	0.00E-01	0.00E-01	0.00E-01	0.00E-01
W 187	0.00E-01	0.00E-01	0.00E-01	0.00E-01	0.00E-01	0.00E-01	0.00E-01	0.00E-01
NP239	0.00E-01	0.00E-01	0.00E-01	0.00E-01	0.00E-01	0.00E-01	0.00E-01	0.00E-01

DOSE TRANSFER FACTORS FOR RADIONUCLIDES IN EFFLUENT WATER

AGE = INFANT
PATHWAY = BOATING

	TOTAL BODY	GI-LLI	BONE	LIVER	KIDNEY	THYROID	LUNG	SKIN
				(mrem gal)/(Ci min)				
H 3	0.00E-01	0.00E-01	0.00E-01	0.00E-01	0.00E-01	0.00E-01	0.00E-01	0.00E-01
C 14	0.00E-01	0.00E-01	0.00E-01	0.00E-01	0.00E-01	0.00E-01	0.00E-01	0.00E-01
NA 24	0.00E-01	0.00E-01	0.00E-01	0.00E-01	0.00E-01	0.00E-01	0.00E-01	0.00E-01
P 32	0.00E-01	0.00E-01	0.00E-01	0.00E-01	0.00E-01	0.00E-01	0.00E-01	0.00E-01
CR 51	0.00E-01	0.00E-01	0.00E-01	0.00E-01	0.00E-01	0.00E-01	0.00E-01	0.00E-01
MN 54	0.00E-01	0.00E-01	0.00E-01	0.00E-01	0.00E-01	0.00E-01	0.00E-01	0.00E-01
MN 56	0.00E-01	0.00E-01	0.00E-01	0.00E-01	0.00E-01	0.00E-01	0.00E-01	0.00E-01
FE 55	0.00E-01	0.00E-01	0.00E-01	0.00E-01	0.00E-01	0.00E-01	0.00E-01	0.00E-01
FE 59	0.00E-01	0.00E-01	0.00E-01	0.00E-01	0.00E-01	0.00E-01	0.00E-01	0.00E-01
CO 58	0.00E-01	0.00E-01	0.00E-01	0.00E-01	0.00E-01	0.00E-01	0.00E-01	0.00E-01
CO 60	0.00E-01	0.00E-01	0.00E-01	0.00E-01	0.00E-01	0.00E-01	0.00E-01	0.00E-01
NI 63	0.00E-01	0.00E-01	0.00E-01	0.00E-01	0.00E-01	0.00E-01	0.00E-01	0.00E-01
NI 65	0.00E-01	0.00E-01	0.00E-01	0.00E-01	0.00E-01	0.00E-01	0.00E-01	0.00E-01
CU 64	0.00E-01	0.00E-01	0.00E-01	0.00E-01	0.00E-01	0.00E-01	0.00E-01	0.00E-01
ZN 65	0.00E-01	0.00E-01	0.00E-01	0.00E-01	0.00E-01	0.00E-01	0.00E-01	0.00E-01
ZN 69	0.00E-01	0.00E-01	0.00E-01	0.00E-01	0.00E-01	0.00E-01	0.00E-01	0.00E-01
BR 83	0.00E-01	0.00E-01	0.00E-01	0.00E-01	0.00E-01	0.00E-01	0.00E-01	0.00E-01
BR 84	0.00E-01	0.00E-01	0.00E-01	0.00E-01	0.00E-01	0.00E-01	0.00E-01	0.00E-01
BR 85	0.00E-01	0.00E-01	0.00E-01	0.00E-01	0.00E-01	0.00E-01	0.00E-01	0.00E-01
RB 86	0.00E-01	0.00E-01	0.00E-01	0.00E-01	0.00E-01	0.00E-01	0.00E-01	0.00E-01
RB 88	0.00E-01	0.00E-01	0.00E-01	0.00E-01	0.00E-01	0.00E-01	0.00E-01	0.00E-01
RB 89	0.00E-01	0.00E-01	0.00E-01	0.00E-01	0.00E-01	0.00E-01	0.00E-01	0.00E-01
SR 89	0.00E-01	0.00E-01	0.00E-01	0.00E-01	0.00E-01	0.00E-01	0.00E-01	0.00E-01
SR 90	0.00E-01	0.00E-01	0.00E-01	0.00E-01	0.00E-01	0.00E-01	0.00E-01	0.00E-01
SR 91	0.00E-01	0.00E-01	0.00E-01	0.00E-01	0.00E-01	0.00E-01	0.00E-01	0.00E-01
SR 92	0.00E-01	0.00E-01	0.00E-01	0.00E-01	0.00E-01	0.00E-01	0.00E-01	0.00E-01
Y 90	0.00E-01	0.00E-01	0.00E-01	0.00E-01	0.00E-01	0.00E-01	0.00E-01	0.00E-01
Y 91M	0.00E-01	0.00E-01	0.00E-01	0.00E-01	0.00E-01	0.00E-01	0.00E-01	0.00E-01
Y 91	0.00E-01	0.00E-01	0.00E-01	0.00E-01	0.00E-01	0.00E-01	0.00E-01	0.00E-01
Y 92	0.00E-01	0.00E-01	0.00E-01	0.00E-01	0.00E-01	0.00E-01	0.00E-01	0.00E-01
Y 93	0.00E-01	0.00E-01	0.00E-01	0.00E-01	0.00E-01	0.00E-01	0.00E-01	0.00E-01
ZR 95	0.00E-01	0.00E-01	0.00E-01	0.00E-01	0.00E-01	0.00E-01	0.00E-01	0.00E-01
ZR 97	0.00E-01	0.00E-01	0.00E-01	0.00E-01	0.00E-01	0.00E-01	0.00E-01	0.00E-01
NB 95	0.00E-01	0.00E-01	0.00E-01	0.00E-01	0.00E-01	0.00E-01	0.00E-01	0.00E-01
MO 99	0.00E-01	0.00E-01	0.00E-01	0.00E-01	0.00E-01	0.00E-01	0.00E-01	0.00E-01
TC 99M	0.00E-01	0.00E-01	0.00E-01	0.00E-01	0.00E-01	0.00E-01	0.00E-01	0.00E-01
TC101	0.00E-01	0.00E-01	0.00E-01	0.00E-01	0.00E-01	0.00E-01	0.00E-01	0.00E-01

DOSE TRANSFER FACTORS FOR RADIONUCLIDES IN EFFLUENT WATER

AGE = INFANT
PATHWAY = BOATING

	TOTAL BODY	GI-LLI	BONE	LIVER	KIDNEY	THYROID	LUNG	SKIN
				(mrem gal)/(Ci min)				
RU103	0.00E-01	0.00E-01	0.00E-01	0.00E-01	0.00E-01	0.00E-01	0.00E-01	0.00E-01
RU105	0.00E-01	0.00E-01	0.00E-01	0.00E-01	0.00E-01	0.00E-01	0.00E-01	0.00E-01
RU106	0.00E-01	0.00E-01	0.00E-01	0.00E-01	0.00E-01	0.00E-01	0.00E-01	0.00E-01
AG110M	0.00E-01	0.00E-01	0.00E-01	0.00E-01	0.00E-01	0.00E-01	0.00E-01	0.00E-01
TE125M	0.00E-01	0.00E-01	0.00E-01	0.00E-01	0.00E-01	0.00E-01	0.00E-01	0.00E-01
TE127M	0.00E-01	0.00E-01	0.00E-01	0.00E-01	0.00E-01	0.00E-01	0.00E-01	0.00E-01
TE127	0.00E-01	0.00E-01	0.00E-01	0.00E-01	0.00E-01	0.00E-01	0.00E-01	0.00E-01
TE129M	0.00E-01	0.00E-01	0.00E-01	0.00E-01	0.00E-01	0.00E-01	0.00E-01	0.00E-01
TE129	0.00E-01	0.00E-01	0.00E-01	0.00E-01	0.00E-01	0.00E-01	0.00E-01	0.00E-01
TE131M	0.00E-01	0.00E-01	0.00E-01	0.00E-01	0.00E-01	0.00E-01	0.00E-01	0.00E-01
TE131	0.00E-01	0.00E-01	0.00E-01	0.00E-01	0.00E-01	0.00E-01	0.00E-01	0.00E-01
TE132	0.00E-01	0.00E-01	0.00E-01	0.00E-01	0.00E-01	0.00E-01	0.00E-01	0.00E-01
I 130	0.00E-01	0.00E-01	0.00E-01	0.00E-01	0.00E-01	0.00E-01	0.00E-01	0.00E-01
I 131	0.00E-01	0.00E-01	0.00E-01	0.00E-01	0.00E-01	0.00E-01	0.00E-01	0.00E-01
I 132	0.00E-01	0.00E-01	0.00E-01	0.00E-01	0.00E-01	0.00E-01	0.00E-01	0.00E-01
I 133	0.00E-01	0.00E-01	0.00E-01	0.00E-01	0.00E-01	0.00E-01	0.00E-01	0.00E-01
I 134	0.00E-01	0.00E-01	0.00E-01	0.00E-01	0.00E-01	0.00E-01	0.00E-01	0.00E-01
I 135	0.00E-01	0.00E-01	0.00E-01	0.00E-01	0.00E-01	0.00E-01	0.00E-01	0.00E-01
CS134	0.00E-01	0.00E-01	0.00E-01	0.00E-01	0.00E-01	0.00E-01	0.00E-01	0.00E-01
CS136	0.00E-01	0.00E-01	0.00E-01	0.00E-01	0.00E-01	0.00E-01	0.00E-01	0.00E-01
CS137	0.00E-01	0.00E-01	0.00E-01	0.00E-01	0.00E-01	0.00E-01	0.00E-01	0.00E-01
CS138	0.00E-01	0.00E-01	0.00E-01	0.00E-01	0.00E-01	0.00E-01	0.00E-01	0.00E-01
BA139	0.00E-01	0.00E-01	0.00E-01	0.00E-01	0.00E-01	0.00E-01	0.00E-01	0.00E-01
BA140	0.00E-01	0.00E-01	0.00E-01	0.00E-01	0.00E-01	0.00E-01	0.00E-01	0.00E-01
BA141	0.00E-01	0.00E-01	0.00E-01	0.00E-01	0.00E-01	0.00E-01	0.00E-01	0.00E-01
BA142	0.00E-01	0.00E-01	0.00E-01	0.00E-01	0.00E-01	0.00E-01	0.00E-01	0.00E-01
LA140	0.00E-01	0.00E-01	0.00E-01	0.00E-01	0.00E-01	0.00E-01	0.00E-01	0.00E-01
LA142	0.00E-01	0.00E-01	0.00E-01	0.00E-01	0.00E-01	0.00E-01	0.00E-01	0.00E-01
CE141	0.00E-01	0.00E-01	0.00E-01	0.00E-01	0.00E-01	0.00E-01	0.00E-01	0.00E-01
CE143	0.00E-01	0.00E-01	0.00E-01	0.00E-01	0.00E-01	0.00E-01	0.00E-01	0.00E-01
CE144	0.00E-01	0.00E-01	0.00E-01	0.00E-01	0.00E-01	0.00E-01	0.00E-01	0.00E-01
PR143	0.00E-01	0.00E-01	0.00E-01	0.00E-01	0.00E-01	0.00E-01	0.00E-01	0.00E-01
PR144	0.00E-01	0.00E-01	0.00E-01	0.00E-01	0.00E-01	0.00E-01	0.00E-01	0.00E-01
ND147	0.00E-01	0.00E-01	0.00E-01	0.00E-01	0.00E-01	0.00E-01	0.00E-01	0.00E-01
W 187	0.00E-01	0.00E-01	0.00E-01	0.00E-01	0.00E-01	0.00E-01	0.00E-01	0.00E-01
NP239	0.00E-01	0.00E-01	0.00E-01	0.00E-01	0.00E-01	0.00E-01	0.00E-01	0.00E-01