Draft Submittal

FARLEY JAN. 2005 EXAM
50-348 & 50-364/2005301

JANUARY 10 - 14, 2005
JANUARY 18, 2005 (written)

1. Reactor Operator Operator Written Exam

FARLEY JAN. 2005 EXAM
50-348 & 50-364/2005301

JANUARY 10 - 14, 2005
JANUARY 18, 2005 (written)

Farley RO Written Draft

1. 001A1.02 001/2/2/P-IMP/C/A 3.1/3.4/MOD/FA011005/RO/

Given the following initial conditions:

- Unit 2 is at 50% power (MOL).
- Rod control is in Automatic.
- Step counters show Bank D control rods at 170 steps.
- FIRST STG IMPULSE PRESS SEL SWITCH is selected to PT-446.
- Tavg and Tref are matched and no load change is in progress.

PT-446, TURB FIRST STG PRESS, fails high. Which one of the following describes how the control rods will respond with **NO operator action**?
(100% Tref = 573°F)

A. Step out until Bank D reaches 231 steps, then stop and do not move.

B. Step out until Tavg equals Tref, then step in or out to control Tavg at the new Tref setpoint.

C. Step out until Bank D reaches C-11, BANK D AUTO ROD STOP, then stop and do not move.

D. Step out until the rate of change signal decays off, then step in or out to control Tavg at a 50% Tref value.

A. Incorrect- If the rods were to step out for a while, then they would stop at Bank D at 220 due to C-11 rod stop. The rods would not make it to 231 steps.

B. Correct - **Step out until Tavg equals Tref, then step in or out to control Tavg at the new Tref setpoint.**
With Tref failed high, the upper temperature is now 573°F. At 50% power, Tavg is 560°F. With the Rx at MOL there is approx. 15 pcm/°F so to get to 573°F would be approx. 200 pcm. (13° X 15 = 195). This would put bank D rods at approx 187 steps and the program would then control Tavg at 573°F.

C. Incorrect - If Bank D rods were to get to C-11, they would stop, however, they would then control temperature at 573°F and step in/out as necessary. Also for rods to get to 220 steps, they would have to move 50 steps and add 680 pcm to the core. This would be approx. 45°F and would take Tavg to over 600°F.

D. Incorrect - This is partially true in that the rods would step out due to the rate of change signal, but they would continue out due to the temp deviation. They would then control temperature at the new Tref of 573°F, which is the high end of that scale.

001A1.02 Ability to predict and/or monitor changes in parameters (to prevent exceeding design limits) associated with operating the CRDS controls including: T-ref

Predict and explain the following instrument/equipment response expected when performing Rod Control System evolutions including the fail condition, alarms, and trip setpoints (OPS40204I08).
• Nuclear Power Range Channel N-44
• Turbine Impulse Pressure Channels, PT-446 & 447
• Tavg Channels

List the automatic actions associated with the Rod Control System components and equipment during normal and abnormal operations including (OPS40204I07):
• Normal control methods
• Automatic actuation including setpoint (example SI, Phase A, Phase B, MSLIAS, LOSP, SG level)
• Interlocks

modified from ROD CONT-40204I07 #27 (this question needs replaced in exam bank)

Modified from this question

QUESTIONS REPORT

for Questions

ROD CONT-40204I07 027/HLT/SOIT//M (LEVEL 1) SYS/001A1.02////

Assuming automatic rod control and 50% initial power, for a failure of the selected Pimp channel high, the control rods will:

A. Step out and try to control Tave at a new higher level.

B. Step out and continue to step out because the new Tref is offscale high.

C. Step out until the rate of change signal decays off, then return Tave to a 50% Tref value.

D. Step in and continue to step in.

6. Predict and explain the following instrument/equipment response expected when performing Rod Control System evolutions including the fail condition, alarms, and trip setpoints (OPS40204I08).
- Nuclear Power Range Channel N-44
- Turbine Impulse Pressure Channels, PT-446 & 447
- T_{avg} Channels

5. List the automatic actions associated with the Rod Control System components and equipment during normal and abnormal operations including (OPS40204I07):
- Normal control methods
- Automatic actuation including setpoint (example SI, Phase A, Phase B, MSLIAS, LOSP, SG level)
- Interlocks

C-7 Interlock

This control interlock arms the steam dump upon a load rejection (when in coincidence with C-9). The steam dump demand interlock (C-7) is actuated when turbine load is reduced by greater than 15 percent in 120 seconds. Rate differentiation of the first stage turbine impulse chamber pressure signal provides the equivalent turbine load signal.

C-9 Interlock

C-9 is the condenser-available interlock. The condenser must be available in order to allow steam dump arming. To activate C-9, both condenser pressures must be < 8 inches Hg vacuum, and 1/2 circulation water pump motor breakers must be shut.

C-11 Interlock

Control interlock C-11 prevents misalignment of rod position counters by blocking automatic withdrawal of control bank D when control bank D position is at 220 steps.

C-20 Interlock

Control interlock C-20 is used to enable the Anticipated Transient Without Trip (ATWT) Mitigation System Actuation Circuitry (AMSAC) when turbine load is > 40% as indicated by two out of two turbine impulse pressure channels. When turbine load is > 40% on 2/2 detectors and SG level decreases to < 10% on 2/3 SGs for 25 seconds, the AMSAC system will trip the main turbine and provide an auto start signal to all AFW pumps. There is a time delay drop out associated with the impulse press portion of the signal such that for 260 sec after impulse press decreases below 40%, AMSAC is still enabled.

Reactor Trips (Table 1)

The previous sections discussed the protection purposes and the design and hardware of the reactor protection system. The RPS essentially senses any approach to unsafe conditions and takes appropriate automatic action (initiates ESF systems and/or trips the reactor) to protect the plant. The following is a discussion of conditions, coincidences, and set points that will initiate

C-7

There is a LOSS OF LOAD INTERLOCK C-7A light on the bypass and permissives light box that energizes if a load rejection (as measured by turbine impulse pressure) has occurred.

C-9

There is a CONDENSER AVAILABLE C-9 light on the bypass and permissives light box that energizes when both condenser pressures are less than 8 inches Hg vacuum and 1/2 circulation water pump motor breakers is shut.

C-11

This is the bank D rod withdrawal limit. An alarm (BANK D FULL ROD WTHDRL AUTO ROD STOP) energizes if the bank D group step counter exceeds the C-11 setpoint. Three minutes after receiving the alarm the BANK D AUTO ROD STOP C-11 light on the bypass and permissive box energizes and MCB alarm BANK D FULL ROD WTHDRL AUTO ROD STOP clears.

C-20

There is a LO TURB IMPULSE PRESS AMSAC TRIP BLOCKED light on the bypass and permissives light box that energizes when 2/2 turbine impulse pressure channels have been less than 40% for greater than 260 seconds.

Testing

Output Relay Test Panel (Figures 7 and 27)

The output relay test panel checks the master relay contacts and their associated slave relay coils by applying a low DC voltage to the slave relay coil. Selection of either the low voltage DC or 120V AC supply voltage (the AC supply is the normal supply), is made by the MODE SELECTOR switch. With the MODE SELECTOR switch in the OPERATE position, 120V AC power is available to operate the slave relays whenever a master relay energizes. In the TEST position, a low DC voltage can be applied to the slave relay coil.

TABLE 6, CONT.
CONTROL INTERLOCKS

PERMISSIVE	SOURCE	SETPOINT	COINCIDENCE	LIGHT STATUS	FUNCTION
C-7 Sudden Loss of Load	Turbine Impulse Pressure Instrument 447 rate circuit	15% Turbine Power Reduction 120 sec Time Constant	1/1 > setpoint	lit > setpoint	Arms steam dump valves, manually reset by placing the control mode selector switch to reset momentarily.
C-9 Condenser Available	Condenser Pressure Switch and Circ Water Pump Breakers	8" Hg Vacuum and Closed	2/2 > setpoint and 1/2 > setpoint	lit > setpoint	Allows steam dump valves to be armed.
C-11 Bank D Stop	P/A Converter Bank D Position	220 Steps	1/1 = setpoint	lit after being at setpoint for 3 minutes	Stops outward rod motion in auto.
C-20 AMSAC Enabled	Turbine Impulse Pressure Instruments 2446 and 2447	>40% and 2/3 S/G narrow range levels <10% for 25 seconds	2/2 > setpoint sealed in for 260 seconds after IMP < 40%	lit < setpoint	Trips main turbine and auto starts all AFW pumps

Bank Overlap Unit (BOU)

Refer to Figure 6 & 8. The BOU will run when the BSS is in either the AUTO or the manual (MAN) position. The BSS position, along with the BOU, determines through the bank selection circuit which bank selection contacts in the master cycler will be closed. In AUTO or MAN, the BOU makes the decision as to which bank or banks will be operated at any one time.

The BOU is a reversible counter that can count from zero to 999. In AUTO or MAN, the counter advances or backs up one count (step) each time the master cycler informs it that a complete step has been accomplished (pulse zero and three on the master cycler).

(Note: The following discussion assumes the BOU is set for All Rods Out, ARO @ 225 steps.)

Six thumbwheel switches at the logic cabinet determine when the overlap between the banks occurs. Starting at zero steps, only the bank A rods will move. The first thumbwheel is set at 128 steps, which starts the bank B rods. This provides for a 97 step overlap between banks A and B. The second thumbwheel, set at 225, stops the bank A rods. The third thumbwheel, set at 256 steps, starts the bank C rods. This sequence continues until all banks are properly overlapped.

There is not a thumbwheel to stop bank D at the current all rods out for bank D. In automatic, the C-11 control interlock will stop rod withdrawal at 220 steps on bank D. The rods are physically restrained from being withdrawn greater than 231 steps. Positioning the In-Hold-Out handswitch in the out position beyond 231 steps causes the BOU and the step counters for bank D to continue counting upward. When control rods are subsequently inserted, the actual rod position will be in disagreement with the BOU and the step counters.

The output of the BOU counter feeds the bank selection circuit. The bank selection circuit sends one signal to the bank selection contacts in the master cycler and a second signal to the power cabinets. The signal to the power cabinets is referred to as a multiplexing and inhibit signal.

Slave Cyclers

Refer to Figure 6 & 9. The slave cyclers receive directional go pulses from the master cycler. Once a go pulse is received, the slave cycler counts once from zero to 127 and resets back to zero. The time required for the 127 counts is 780 milliseconds. This is the time required for the CRDM to sequence through one full step-up or step-down. As the counter cycles through its 127 steps, it will send high, low, and zero current orders to the power cabinet. These orders will cause

determine which bank and group of rods are moving and the direction of rod movement. Each group of rods has its own data logging circuit. The data logging circuits essentially receive the same information that the power cabinets receive. When the power cabinets receive the information, they cause an individual group of rods to step in or out. When the data logging circuit receives the information, it causes an electronic counter to pulse up or down. For each group of rods, this up or down pulse is sent to the step counters on the MCB, the pulse-to-analog converter and the plant computer. The operator now has very accurate indication of where each group of rods should be.

Note that pulses from the data logging circuit will continue for a bank and group of rods even if actual rod motion is prevented physically at zero steps or the rod withdrawal mechanical limit. In this case, the group step counters, the plant computer, and the P-to-A converter would have to be manually adjusted to the actual rod position.

Pulse-to-Analog Converter

Refer to Figure 12. The pulse-to-analog converter (P to A) receives the up and down pulses only for the control banks from the data logging circuits. The P to A converter converts the pulses to an analog signal (DC voltage) that is proportional to bank height from zero to all rods out (ARO). The analog signal is then compared to the rod insertion limit (RIL) to generate rod position lo and lo-lo alarms. The same analog signal is used by the rod control circuits in the 7300 instrumentation system to determine when control bank D is above 220 steps. When control bank D is greater than 220 steps control interlock C-11 will be active. See the T_{avg}, ΔT, and P_{imp} lesson for further information on RIL.

A control panel for the P to A converter is located in the rear of the DC hold cabinet. This cabinet allows the operator to display the rod height for any one of the control banks. The selected bank position indication can be changed for the selected display by selecting manual and using the up or down push button.

Failures Affecting Operation of the Rod Control System

Instrument failures that could affect the operation of the rod control system include failure of nuclear power channel N-44, selected turbine impulse pressure input PT-446 or PT-447, or T_{avg} input. The following discussions assume the BSS in auto. The proper response to any unexpected rod motion would be to enter AOP-19, *Malfunction of Rod Control System.* This procedure will

tell the operator to attempt to stop unexpected rod motion by placing the BSS in manual.

Failure of nuclear power channel N-44

Failure of N-44 channel would affect the turbine power-reactor power mismatch rate of change input to the reactor control unit. Since this is a rate of change input, a very slow failure of N-44 would have little affect. The dominant temperature mismatch channel would keep the rods at program T_{avg}. An immediate failure of N-44 low would cause the rate of change circuit to respond by moving the control rods out (if below D at 220 steps). Rod speed could be as high as 72 steps per minute initially. RCS T_{avg} could quickly rise above program as the rods moved out. The temperature-mismatch channel of the reactor control unit would respond when the temperature mismatch with program T_{avg} reached 1.5 degrees. The temperature error signal would call for rods to step back in to restore T_{avg} to program. RCS temperature would likely rise several degrees before the rod control response to the temperature error would begin to bring the rods back in. Because there is a one degree deadband in the reactor control unit, rods would step in to restore T_{avg} to approximately one degree above program. Thus, without operator intervention, the rods would end up close to their original position.

Failure of T_{avg} Input

The temperature-mismatch channel of the reactor control unit gets its input from the median T_{avg} signal from the three RCS loop T_{avg} inputs. Failure of one of the T_{avg} inputs to the median T_{avg} circuit would not affect rod control since the bad input would automatically be selected out.

Failure of Selected P_{imp}

The operator selected P_{imp} provides the turbine power signal to the turbine power-reactor power mismatch rate of change channel and the T_{ref} signal to the temperature–mismatch channel of the reactor control unit. Thus, if PT-446 is the selected input, and it fails low, the turbine power-reactor power mismatch rate of change channel will see turbine power go to 0% and the temperature-mismatch channel will see program T_{avg} at a no-load value of 547 degrees. The temperature error portion of the reactor control unit will call for rods to drive in to reduce T_{avg} to the no-load value. If the failure of PT-446 is instantaneous, the rate of change portion of the reactor control unit will call for rods to step in to bring reactor power to 0%. Rods would initially step in at a rate of 72 steps per minute and possibly not stop without operator

intervention or reactor protection system automatic action.

TECHNICAL SPECIFICATIONS AND TECHNICAL REQUIREMENT

3.1.4 Rod Group Alignment Limits

LCO 3.1.4 All shutdown and control rods shall be OPERABLE, with all individual indicated rod positions within 12 steps of their group step counter demand position. Applicable in MODES 1 and 2.

The OPERABILITY (e.g., trippability) of the shutdown and control rods is an initial assumption in all safety analyses that assume rod insertion upon reactor trip. Maximum rod misalignment is an initial assumption in the safety analysis that directly affects core power distributions and assumptions of available SDM.

Mechanical or electrical failures may cause a control rod to become inoperable or to become misaligned from its group. Control rod inoperability or misalignment may cause increased power peaking, due to the asymmetric reactivity distribution and a reduction in the total available rod worth for reactor shutdown. Therefore, control rod alignment and OPERABILITY are related to core operation in design power peaking limits and the core design requirement of a minimum SDM.

Continued operation of the reactor with a misaligned control rod is allowed if the heat flux hot channel factor ($F_Q(Z)$) and the nuclear enthalpy hot channel factor ($F^N_{\Delta H}$) are verified to be within their limits in the COLR and the safety analysis is verified to remain valid. When a control rod is misaligned, the assumptions that are used to determine the rod insertion limits, AFD limits, and quadrant power tilt limits are not preserved. Therefore, the limits may not preserve the design peaking factors, and $F_Q(Z)$ and $F^N_{\Delta H}$ must be verified directly by incore mapping.

When one or more rods are untrippable, there is a possibility that the required SDM may be adversely affected. Under these conditions, it is important to determine the SDM, and if it is less than the required value, initiate boration until the required SDM is recovered. The completion time of 1 hour is adequate for determining SDM and, if necessary, for initiating emergency boration and restoring SDM.

If the untrippable rod(s) cannot be restored to OPERABLE status, the plant must be brought to a MODE or condition in which the LCO requirements are not applicable. To achieve this status, the unit must be brought to at least MODE 3 within 6 hours.

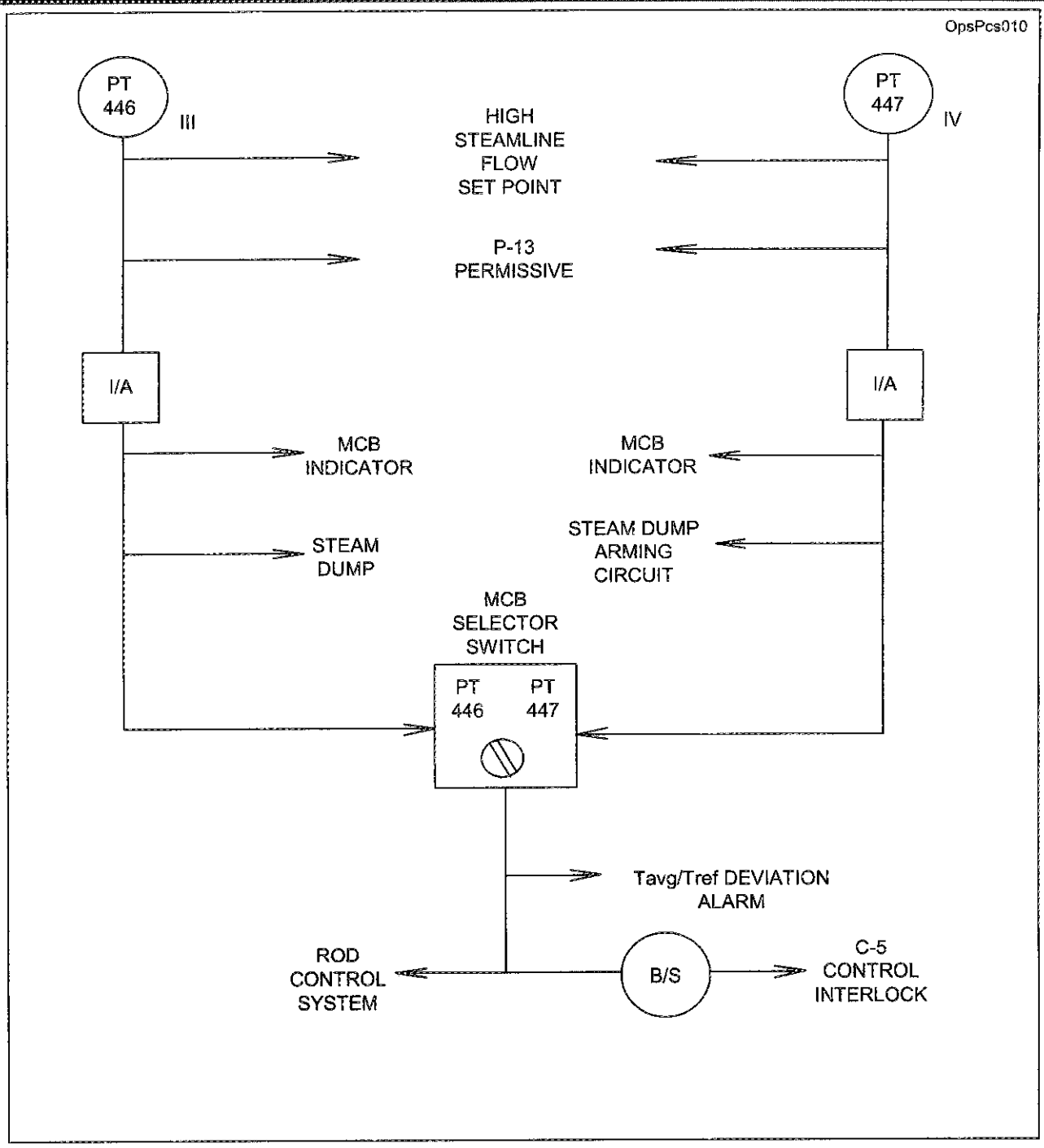

Turbine First Stage Impulse Pressure

Figure 8

Permissive P-13

The at-power trips are blocked when the power level is below the P-7 setpoint (10%). These trips include the loss-of-coolant flow related trips, high pressurizer level trips, and low pressurizer pressure trips. One of the inputs to P-7 is P-13. P-13 actuates when one of the two P_{IMP} signals is greater than 10 percent (when turbine power is greater than 10%).

Control Circuits

Steam Dump Control System

The steam dump system receives two control signals from P_{IMP} one from each channel. One signal provides the loss-of-load arming signal to the dump valves and the other signal generates the T_{ref} control signal for operating the dump valves.

The steam dump control system is armed whenever a sudden loss-of-load occurs (control interlock C-7). A sudden loss-of-load is defined as a load reduction of 15 percent or more (as measured by P_{IMP}) within any two-minute period. A load rejection of this magnitude is too large for the rod control system to cope with, so steam is dumped to provide an artificial load for the reactor until reactor power and temperature can be reduced to values consistent with turbine load. Once the steam dumps are armed, they will modulate open (or trip if the temperature error is larger than a preset setpoint) in proportion to the difference between the median T_{AVG} signal and T_{ref}. Refer to the Steam Dump Control lesson for more detail.

The P_{IMP} channel is selectable via a common MCB switch for the remaining control systems.

Rod Control System

P_{IMP} generates the programmed T_{ref} signal, which is compared to the median T_{AVG} signal. The difference between these two signals determines the speed and direction of control rod motion that is required to make the median T_{AVG} signal equal to T_{ref}. Turbine power (derived from P_{IMP}) is also compared to nuclear power (derived from power range nuclear instrument channel N-44) to produce a power mismatch signal. The rate of change of the power mismatch signal is used to modify the error signal due to the difference between T_{ref} and the median T_{AVG} signal. Thus, the

power mismatch provides an anticipating input to the rod control system for quicker response with minimum overshoot and hunting.

Control Interlock C-5

Automatic withdrawal of control rods is prohibited below 15 percent power. A bistable generates a block signal, which inhibits automatic control rod withdrawal when turbine power is less than 15 percent as indicated by P_{IMP}. Refer to the Full Length Rod Control lesson for more detail.

Control Interlock C-7

Control interlock C-7 automatically arms the steam dump valves upon indication of a sudden loss-of-load. A bistable generates the arming signal when turbine impulse pressure, as sensed by PT-447, decreases at a rate equivalent to 15 percent in 120 seconds. Refer to the Steam Dump lesson for more detail.

OPERATIONS

Instrumentation and Control

T_{AVG} Protection

The T_{AVG} protection channels are identical for sets I, II, and III, except for the numbering. Table I lists the instrument and channel numbers for all three protection sets.

T_{AVG} Signal Generation

The hot and cold leg RTDs generate an output proportional to the temperature of the reactor coolant flowing through the reactor coolant piping. The output is amplified, and a signal proportional to 530°F to 650°F (T_H) and 510°F to 630°F (T_C) is produced. The T_H and T_C signals are processed in a summing amplifier to produce a T_{AVG} output signal of 530°F to 630°F. A lag function on the output of the summing amplifier provides a filter to reduce circuit noise fed to the protection circuits.

Low T_{AVG} -- Feedwater Isolation/High T_{AVG} Alarm

Figure 9

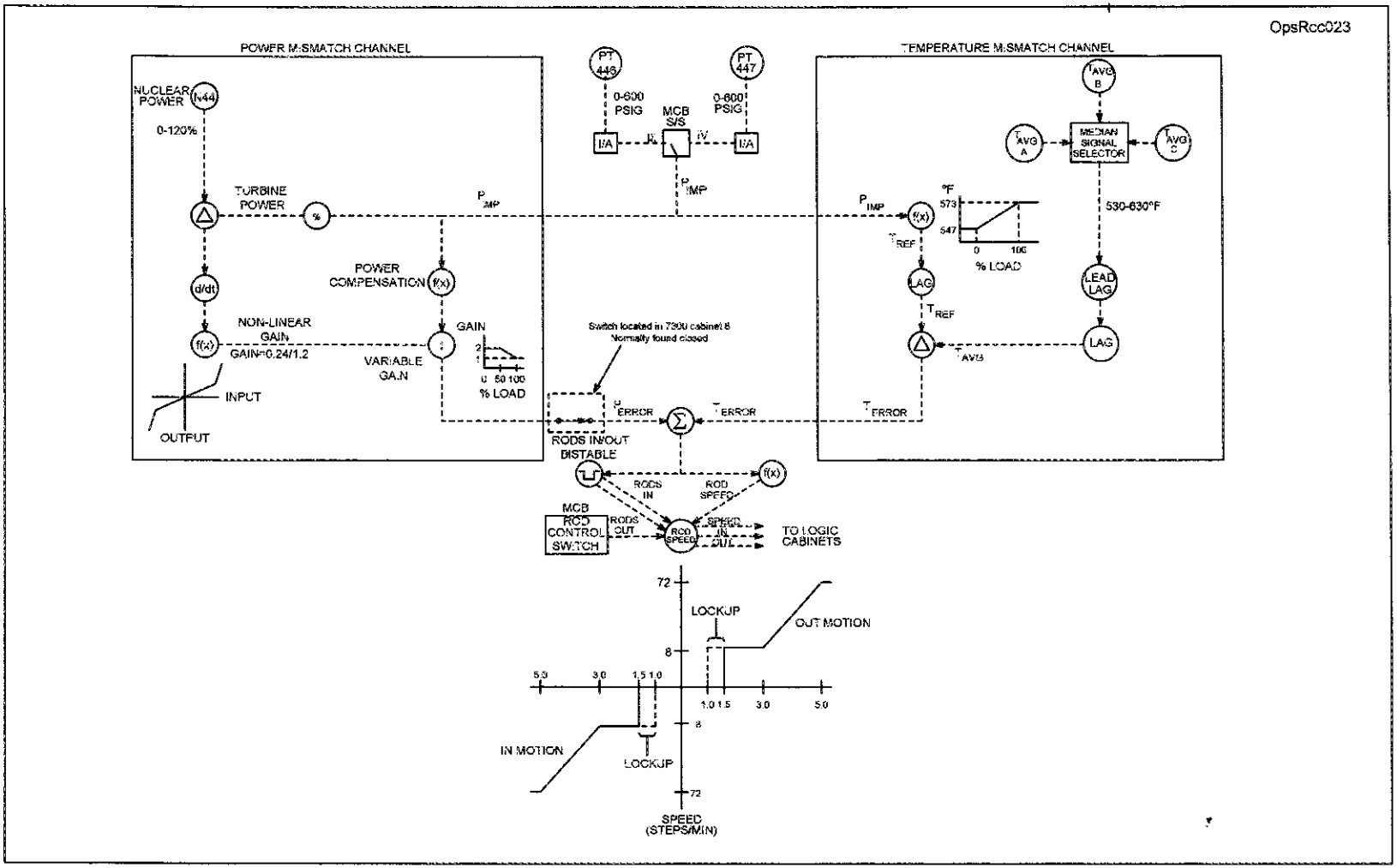

Reactor Control Unit

Figure 5

Figure 1
Rod Bank Insertion Limits versus Rated Thermal Power

Fully Withdrawn – 225 to 231 steps, inclusive

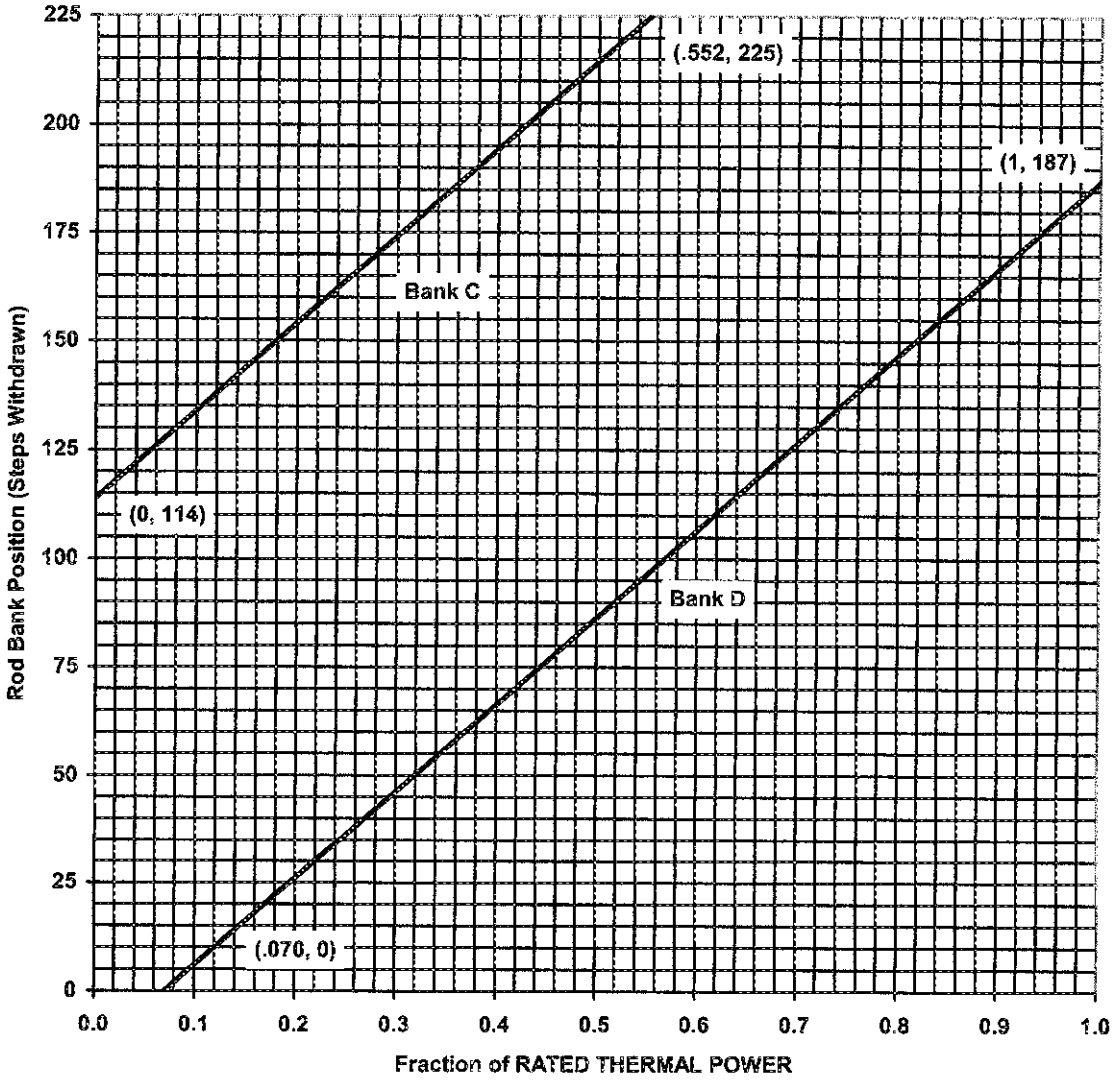

Fully Withdrawn shall be the condition where control rods are at a position within the interval ≥ 225 and ≤ 231 steps withdrawn.

Note: The Rod Bank Insertion Limits are based on the control bank withdrawal sequence A, B, C, D and a control bank tip-to-tip distance of 128 steps.

UNIT 1 VOLUME I CURVE 34 CYCLE 19 EOL
INTEGRAL WORTH VS. STEPS WITHDRAWN OF BANKS
C AND D MOVING IN OVERLAP; HZP, NO XENON

Note: Exempt from 50.59 Screening per AP-1, Attachment 1, Note 1.

Rev. 39 05/03/04 THW

Approved: [signature] 5/3/04
Engineering Support Manager Date

STEPS	WORTH (pcm)
D229	0.0
D228	4.4
D227	8.9
D226	13.3
D225	17.8
D224	22.2
D223	26.7
D222	31.1
D221	35.6
D220	40.0
D219	49.8
D218	59.5
D217	69.3
D216	79.0
D215	92.0
D214	105.0
D213	118.0
D212	131.0
D211	145.8
D210	160.5
D209	175.3
D208	190.0
D207	206.0
D206	222.0
D205	238.0
D204	254.0
D203	270.5
D202	287.0
D201	303.5
D200	320.0

STEPS	WORTH (pcm)
D199	336.3
D198	352.5
D197	368.8
D196	385.0
D195	400.5
D194	416.0
D193	431.5
D192	447.0
D191	461.8
D190	476.5
D189	491.3
D188	506.0
D187	519.8
D186	533.5
D185	547.3
D184	561.0
D183	573.8
D182	586.5
D181	599.3
D180	612.0
D179	624.3
D178	636.5
D177	648.8
D176	661.0
D175	672.3
D174	683.5

STEPS	WORTH (pcm)
D173	694.8
D172	706.0
D171	716.5
D170	727.0
D169	737.5
D168	748.0
D167	758.0
D166	768.0
D165	778.0
D164	788.0
D163	797.3
D162	806.5
D161	815.8
D160	825.0
D159	833.8
D158	842.5
D157	851.3
D156	860.0
D155	868.0
D154	876.0
D153	884.0
D152	892.0
D151	899.5
D150	907.0
D149	914.5
D148	922.0

STEPS	WORTH (pcm)
D147	929.0
D146	936.0
D145	943.0
D144	950.0
D143	956.5
D142	963.0
D141	969.5
D140	976.0
D139	982.0
D138	988.0
D137	994.0
D136	1000.0
D135	1005.3
D134	1010.5
D133	1015.8
D132	1021.0
D131	1026.0
D130	1031.0
D129	1036.0
D128	1041.0
D127	1045.3
D126	1049.5
D125	1053.8
D124	1058.0
D123	1062.0
D122	1066.0

Total worth of Shutdown Banks is **-3779** pcm
Total worth of the Control Banks is **-5247** pcm
Total worth of all banks is **-9026** pcm
Conservative worth of most reactive rod (M-4 at EOL) is **-1561** pcm

2. 003K5.04 001/2/1/RCP/C/A 3.2/3.5/BANK/FA011005/RO/CVR

Given the following plant conditions:

- Unit 1 is at 28% power.
- 1A RCP trips on overcurrent.

Which one of the following is the expected **INITIAL** plant response to the 1A RCP trip?

	1A S/G Narrow Range level	1A S/G Steam Flow
A.	increases	increases
B.	decreases	increases
C.	increases	decreases
D.	decreases	decreases

A. Incorrect. Both parts are wrong as explained in D. below.

B. Incorrect. The first part is correct, the second is incorrect due to the steam pressure in A SG going down, and at the same time the pressures in the other two SGs are higher than A SG, A steam flow must go down.

C. Incorrect. This would be true if the long term effects were asked in this question. After the initial shrink in level, the steam flow is so low, and the feed flow is still as high as it needed to be for the higher steam flow, level starts going up. AOP-4.0 requires taking manual control of the Feed Reg Valve and going to close to prevent overfilling the SG.

D. Correct. **decreases** **decreases**

The T cold water from the other two loops gets pumped through the idle A loop "backwards". The backflow that will occur will cause T cold to be flowing back through the steam generator tubes instead of T hot. T cold will then be flowing back into the reactor outlet nozzle for A loop. This causes the steam pressure to be lower in A SG. The steam flow will thus go down to almost zero flow in A SG. The reduction in steam flow causes a "shrink" in indicated level initially. Shrink and Swell is explained fully in the fundamental lesson material, but is simply a reduction in indicated SG level for a reduction in steam flow, and an increase in indicated SG Level with an increase in steam flow.

003K5.04 Reactor Coolant Pump
K5 Knowledge of the operational implications of the following concepts as they apply to the RCPS: (CFR: 41.5 / 45.7) – Effects of RCP shutdown on secondary parameters, such as steam pressure, steam flow and feed flow

2. Evaluate abnormal plant or equipment conditions associated with the Reactor Coolant System and determine the integrated plant actions needed to mitigate the consequence of the abnormality (OPS52101A02).

RCP-52101D02 #18

AOP-4.0, LOSS OF REACTOR COOLANT FLOW

INTRODUCTION

This lesson addresses operator actions necessary to respond to a loss of reactor coolant flow that does not result in a reactor trip and/or a reactor trip is not required. The actions taken will be determined by the resulting plant conditions following the transient. If a loss of reactor coolant flow results in a reactor trip, then the operator will go directly to the EEP-0, "Reactor Trip or Safety Injection." If the loss of coolant flow does not cause a reactor trip in Mode 1 or if the loss of coolant flow occurs while in Modes 2 - 4, the operator will carry out the required actions in accordance with AOP-4.0, "Loss of Reactor Coolant Flow."

DETAILED DESCRIPTION

Partial Loss of Flow

A reactor trip signal is generated if either of the following conditions occurs: a loss of coolant flow occurring in one loop if reactor power is greater than 30% (P-8) or a loss of coolant flow in two loops if reactor power is greater than 10% (P-7). For a discussion on the plant response and operator actions expected, refer to lesson plans OPS-52530A, "EEP-0, Reactor Trip or Safety Injection," and OPS-52531B, "ESP-0.1, Reactor Trip Response."

If the reactor is less than 30% power and there is a loss of coolant flow in one loop (two or more loops if below 10% power), the operator must respond in an efficient manner in order to minimize the effects on primary and secondary systems. In the loop that has lost coolant flow, temperatures will stabilize at approximately the cold leg temperature (T_C) of the unaffected loop(s). *This will drop the saturation temperature and pressure of the affected loop's steam generator (SG), causing SG level to drop (shrink), and will also reduce the amount of steaming and power output from the affected SG to a minimum.

Assuming reactor power hasn't changed, the core ΔT must increase to compensate for the reduced mass flow rate through the core. This means that the unaffected loop's hot leg temperature(s) (T_H) increases and cold leg temperature(s) (T_C) remains relatively stable. This

*This sentence is incomplete & misleading at best & will be fixed after this exam. It should read:

"The lower loop RCS temp tends to reduce S/G press which would by itself cause a "swell". However, the net effect of the reduction in steam flow causes a shrink

will effectively increase the unaffected SG's steaming rate and power output to compensate for the reduced steaming rate from the affected SG.

During the transient, the affected SG main feed regulating or bypass feed regulating valve controller(s) is in automatic. Initially, the regulating valve will go shut in response to the reduced steam flow from the affected SG. This causes SG level in the affected SG to begin to fall. Contributing to the drop in SG level is the phenomenon of SG shrink. Shrink is caused by the density change in the tube section of the SG, which occurs as a result of the drop in temperature on the primary side of the affected SG. The drop in indicated level causes the feed valves to reopen fully in an attempt to bring SG level back up. Overfeeding of the affected SG can occur, which could lead to a turbine trip and SG feed pump (SGFP) trips followed by a reactor trip. The turbine trip and SGFP trip occur at 82% SG level (P-14). To minimize the effects a loss of coolant flow has on the affected SG level, the operator is instructed to take manual control of the affected SGs feed regulating valves.

Another concern on any loss of coolant flow situation is pressurizer pressure control. Automatic control of pressurizer pressure will be affected due to the loss of spray flow if the loss of coolant flow occurs in loops A and/or B. If only one loop is involved, the affected loop's spray valve controller should be placed in MANUAL and the valve closed to prevent spray flow from the unaffected loop bypassing the pressurizer. If both A and B loops are affected, auxiliary spray flow should be utilized if normal letdown is available.

The loop flow indications observed by the operators would be as follows: For the affected loop, flow would slowly decrease to 0 and then return to approximately 10%; for the unaffected loops, the flow should increase to approximately 105% (each loop). The flow indication in the idle loop occurs as flow stops and then begins again in the reverse direction. Since flow rates in the RCS loops are derived from the differential pressure felt in an elbow in each loop, any flow at all will be indicated, regardless of the direction. The indication observed in the two loops with the running pumps is due simply to the pumps in those loops picking up a small portion of the flow lost in the idle loop.

SHRINK AND SWELL

Shrink and swell are steam generator phenomena that are characterized by a change in water level following a change in steam flow. Shrink is a reduction in water level following a reduction in steam flow, while swell is just the opposite.

The rate of heat transfer across the tubes can be calculated using the following equation:

$$\dot{Q} = UA\,(T_{avg} - T_{stm}).$$

Where:

$\dot{Q} = Rate\ of\ heat\ transfer, BTU\ /\ hr$

$U = Overall\ heat\ transfer\ coefficient, BTU\ /\ hr - ft^2 - {}^\circ F$

$A = Area\ of\ heat\ transfer\ surface, ft^2$

$T_{avg} = Avg.\ temperature\ of\ primary\ coolant = \dfrac{T_h + T_c}{2}$

$T_{stm} = Saturation\ temperature\ for\ the\ steam, {}^\circ F.$

$\dot{Q}$ is proportional to the power level, or the energy being removed from the primary system to the steam generator. The heat transfer coefficient (U) remains relatively constant, and is determined by the composition and characteristics of the tubes. The area of heat transfer surface (A) is constant. If you have ever seen a pot of water boiling on a stove, you noticed that tiny bubbles of steam were formed at the hottest portions of the pot and then rose to the surface where they escaped as steam. The same thing takes place around each steam generator tube. The rate of heat transfer or the boiling rate bubbles being formed determined the quantity of the steam. A given boiling rate (power) water mixture will have a corresponding density and specific volume. Looking closely now at an increase in power level, the following events take place:

As steam flow to the main turbine is increased, more energy will be drawn from the steam generator, which tends to decrease the steam pressure. This decrease in steam pressure causes the number and size of the steam bubbles in the boiling region to

increase, which increases the steam to water ratio and specific volume, with a subsequent decrease in density. Initially, the mass of water in the steam generator remains constant, so the decrease in density will be seen as an increased steam generator water level. This phenomenon is known as "swell." The steam generator water level control system will decrease the water level to the operating band causing the mass in the generator to decrease as power level increases.

The opposite effect will be observed in the steam generator when the power level is decreased. The lower heat transfer rate along with the higher steam pressure causes less boiling to occur and a contraction of the steam bubbles present. This decreases the steam-to-water ratio with a subsequent increase in density. Since the mass in the steam generator is initially constant, the increase in density will be seen as a decrease in steam generator water level. This phenomenon has been termed "shrink."

CIRCULATION AND RECIRCULATION RATIO

The moisture that is removed from the steam prior to the steam leaving the steam generator enters the downcomer region where it mixes with the incoming feedwater. Since this separated moisture, upon reaching the riser region, is making its second pass across the heat exchanging U-tubes; this moisture content is called recirculation flow. This recirculation flow mixes with and preheats the incoming makeup feedwater flow. This total flow entering the tube bundle section of the steam generator is called circulation flow.

Circulation flow aids in maintaining proper thermal hydraulic performance (increased steam generator efficiency) and allows for control of the inventory of corrosion products, erosion products, and impurities (sludge) at the tube sheet, which is readily removed by the blowdown system.

Circulation ratio is a measure of the quantity of water entering the tube bundle region as compared to the total feedwater flow.

$$Circ\ Ratio = \frac{Mass\ Flow\ Rate\ Entering\ Tube\ Bundle\ Region}{Mass\ Flow\ Rate\ of\ Feed\ Water}\ (Recirc\ Flow + Feed\ Flow).$$

3. 004G2.4.35 001/2/1/FCV-122/C/A 3.3/3.5/NEW/FA011005/RO/CVR

Local control of charging and letdown is being established on Unit 1 due to a fire in the cable spreading room.

- FNP-1-AOP-28.1, Fire or Inadvertent Protection System Actuation in the Cable Spreading Room, is in progress.
- FCV-122, CHG FLOW REG, is oscillating and not responding in manual or automatic from the controller.
- Pressurizer level is 13%.

Which one of the following is the preferred method to maintain Przr level per AOP-28.1?

A. Alternate opening and closing MOV-8885, CHG PUMP RECIRC TO RCS COLD LEGS, to maintain Przr level.

B. Open MOV-8884 or 8886, CHG PUMP RECIRC TO RCS HOT LEGS, THEN establish at least one letdown orifice on service.

C. Bypass FCV-122 to restore Przr level above 20%, THEN use Charging or Letdown as desired to maintain Przr level.

D. Open FCV-122 with the manual handwheel to restore Przr level above 15%, THEN establish at least one letdown orifice on service.

A. Incorrect - MOV 8885 is not addressed to be used by procedure but do provide a flow path to the RCS similar to 8886 and 8884.

B. Incorrect - Even though this would provide a makeup path the RCS, opening these valves is not addressed by AOP-28.1, and bypassing FCV-122 is directed by step 9.

C. Correct - **Bypass FCV-122 to restore Przr level above 20%, THEN use Charging or Letdown as desired to maintain Przr level.**
AOP-28.1 step 9 directs bypassing FCV-122 and step 28 directs using charging to maintain pressurizer level 20-60%.

D. Incorrect- There is no manual handwheel on FCV-122. That is why the bypass flow arrangement is directed by Step 9 of AOP-28.1. Letdown is not required even when above the automatic isolation setpoint of 15% or above the low limit of pressurizer level of 20% per AOP-28.1 Step 28. This may be confused with the new procedural guidance to use the handwheel on the valve which has a manual handwheel for Letdown Heat exchanger Temperature control. The manual handwheel step has been recently added for finer temp control of CCW to letdown hx.

004G2.4.35 Chemical and Volume Control
2.4 Emergency Procedures /Plan

G2.4.35 – Knowledge of local auxiliary operator tasks during emergency operations including system geography and system implications.

12. Evaluate abnormal plant or equipment conditions associated with the Chemical and Volume Control System and determine the local actions needed to mitigate the consequence of the abnormality. (OPS40301F12)

9.4 Locally verify the following valves are closed:

[] HHSI to RCS CL ISO Q1E21MOV8803A Room 172
[] HHSI to RCS CL ISO Q1E21MOV8803B Room 172
[] Chg Pump Recirc to Cold Leg s Q1E21MOV8885 Room 185

9.5 ATTACHMENT 17, RHR/CONTAINMENT SPRAY SUMP SUCTION ISOLATION

****

CAUTION: Equipment placed in local at the hot shutdown panel will not operate automatically.

****

10.0 Align C-HSDP components for local operation. (121' Communications Rm)

125 VDC CONT PWR FOR HSP XFER RELAYS
[] Q1H22HS0002-B to ON

1C
CHG PUMP
[] Q1E21P002C to LOCAL

1B CHG PUMP
B TRN
[] Q1E21P002B to LOCAL

1A
CCW PUMP
[] Q1P17P001A to LOCAL

1B CCW PUMP
B TRN
[] Q1P17P001B to LOCAL

B TRN SOLENOIDS FOR
MDAFWP FCV's
[] Q1N23HV3227A/B/C to LOCAL

1B
MDAFWP
[] Q1N23P001B to LOCAL

PRZR PORV
ISO
[] Q1B31MOV8000B to LOCAL

PRZR PORV
[] Q1B31PCV444B to LOCAL

____Page Completed

11.0 Align F-HSDP components for local operation. (121'Communication Rm)

TDAFWP
TO 1A(1B,1C) SG
[] Q1N23HV3228A to LOCAL
[] Q1N23HV3228B to LOCAL
[] Q1N23HV3228C to LOCAL

TDAFWP STM SUPP
FROM 1B(1C) SG
[] Q1N12HV3235A/26 to LOCAL
[] Q1N12HV3235B to LOCAL

12.0 Align G-HSDP components for local operation. (121' Hallway)

125 VDC CONT PWR FOR HSP XFER RELAYS
[] Q1H22HS0001-A to ON

PRZR PORV
[] Q1B31PCV445A to LOCAL

PRZR PORV
ISO
[] Q1B31MOV8000A to LOCAL

13.0 Align A-HSDP components for local operations. (121' Hallway)

13.1 Place the following in LOCAL.

MDAFWP
to 1A(1B,1C) SG
[] Q1N23HV3227A
[] Q1N23HV3227B
[] Q1N23HV3227C

1A(1B,1C) MS ATMOS
REL VLV
[] Q1N11PCV3371A
[] Q1N11PCV3371B
[] Q1N11PCV3371C

1A
CHG PUMP
[] Q1E21P002A

1B CHG PUMP
A TRN
[] Q1E21P002B

1A
MDAFWP
[] Q1N23P001A

Step 13 continued on next page.

____Page Completed

1C
CCW PUMP
[] Q1P17P001C

1B CCW PUMP
A TRN
[] Q1P17P001B

14.0 IF pressurizer pressure dropping in an uncontrolled manner, THEN close the associated block valve for any failed open PRZR PORV.

15.0 Check if a loss of all seal cooling has occurred.

16.0 IF all seal cooling is lost, THEN isolate the RCP SEALS and THERMAL BARRIER HX per ATTACHMENT 14, RCP SEAL AND THERMAL BARRIER HX ISOLATION.

NOTE: IF a loss of all seal cooling has occurred, THEN ATTACHMENT 14, RCP SEAL AND THERMAL BARRIER ISOLATION, must be completed prior to starting a Charging Pump, starting a CCW Pump, or reestablishing flow to the Miscellaneous Header.

17.0 Verify charging alignment.

17.1 Verify at least one CCW pump running.

1A
CCW PUMP
[] Q1P17P001A (B-HSDP)

1B CCW PUMP
B TRN
[] Q1P17P001B (B-HSDP)

1B CCW PUMP
A TRN
[] Q1P17P001B (A-HSDP)

1C
CCW PUMP
[] Q1P17P001C (A-HSDP)

Step 17 continued on next page.

___Page Completed

****

CAUTION: IF a loss of charging pump is suspected, THEN no charging pumps should be started until ATTACHMENT 13, VENTING OF CHARGING PUMP SUCTION is performed. A loss of suction could be indicated by either unexpectedly finding no charging pumps in service OR unexplainable fluctuations in charging flow as observed on N1E21FI122B, CHG HDR FLOW.

****

17.2 Verify a charging pump running in the same train as the running CCW pump.

1A
CHG PUMP
[] Q1E21P002A (A-HSDP)

1B CHG PUMP
A TRN
[] Q1E21P002B (A-HSDP)

1B CHG PUMP
B TRN
[] Q1E21P002B (B-HSDP)

1C
CHG PUMP
[] Q1E21P002C (B-HSDP)

___Page Completed

Step 17 continued on next page.

17.3 Verify charging pump suctions aligned to RWST.

17.3.1 Align the following C-HSDP component for local operation.

RWST
TO CHG PUMP
[] Q1E21LCV115D to LOCAL

17.3.2 Align the following G-HSDP component for local operation.

RWST
TO CHG PUMP
[] Q1E21LCV115B to LOCAL

****

CAUTION: IF both RWST TO CHG PUMP valves found closed AND loss of charging pump suction is suspected, THEN ATTACHMENT 13, VENTING OF CHARGING PUMP SUCTION should be performed prior to continuing.

****

17.3.3 Verify charging pump suctions aligned to RWST.

RWST
TO CHG PUMP
[] Q1E21LCV115B open (G-HSDP)
[] Q1E21LCV115D open (B-HSDP)

17.4 Verify CHG FLOW N1E21HIK122 adjusted to 50%.

17.5 Place CHG FLOW in LOCAL (A-HSDP).

Step 17 continued on next page.

_____Page Completed

NOTE: Isolation of letdown due to low pressurizer level 15% will unnecessarily complicate plant recovery (LCV 459 & 460 cannot be re-opened from the HSDP. Reactor head vents must then be used for removing mass from the primary system). Therefore, emphasis should be placed on controlling charging flow to establish a stable or slowly rising pressurizer level that compensates for any effect on level due to cooldown.

17.6 Adjust CHG FLOW N1E21HIK122 as required to maintain pressurizer level between 20%-60%.

17.6.1 IF FCV-122 is not available for control of charging flow,
THEN, manually control charging flow as follows:

17.6.1.1 Establish continuous communications between the HSD Panel, Control Room and CHG FLOW FK-122.

17.6.1.2 Open charging flow regulator bypass Q1E21V581.

17.6.1.3 Slowly open charging flow regulator bypass Q1E21V135(1-CVC-V-8403) while controlling charging flow and pressurizer level by slowly closing down on charging flow regulator inlet Q1E21V134B(1-CVC-V-8402B).

17.6.1.4 IF leak-by is found to exist on Q1E21V135(1-CVC-V-8403),
THEN charging flow regulator bypass Q1E21V581 may be throttled to control bypass flow.

17.6.1.5 WHEN transfer to manual bypass is complete,
THEN ensure the following valves are closed:

[] Charging flow regulator inlet Q1E21V134B(1-CVC-8402B).
[] Charging flow regulator outlet Q1E21V134A(1-CVC-8402A).

OR

17.6.2 Manually throttle open Q1E21MOV8803A or B, HHSI TO RCS CL, to control pressurizer level.

Step 17 continued on next page.

___Page Completed

****

CAUTION: To prevent potential seal damage, neither seal injection nor CCW cooling should be restored to a RCP which has lost both seal injection and CCW cooling.

****

18.0 Check seal injection flow established.

18.1 IF RCP seals already isolated per ATTACHMENT 14, proceed to step 19.0.

18.2 Verify SEAL WATER INJ N1E21HIK186 adjusted to 50%. (A HSDP)

18.3 Place SEAL WATER INJ N1E21HS0186 N in LOCAL (A-HSDP).

18.4 Verify 6-8 gpm seal injection flow per RCP.

18.4.1 Check seal injection flow to each RCP at the the local indicators. (121 ft, AUX BLDG PPR)

18.4.2 Adjust SEAL WATER INJ N1E21HIK186 to obtain 6-8 gpm seal injection flow per RCP (A-HSDP)

___Page Completed

19.0 Maintain steam generator wide range levels.

19.1 Verify both MDAFWPs running.

1A
MDAFWP
[] Q1N23P001A (A-HSDP)

1B
MDAFWP
[] Q1N23P001B (B-HSDP)

19.2 Maintain steam generator wide range level 64-66%.

1A(1B,1C) SG
WR LVL (A-HSDP)
[] LI-0477A
[] LI-0487A
[] LI-0497A

MDAFWP
TO 1A(1B,1C) SG (A-HSDP)
[] Q1N23HV3227A adjusted
[] Q1N23HV3227B adjusted
[] Q1N23HV3227C adjusted

19.3 <u>IF</u> TDAFWP required,
<u>THEN</u> perform the following.

19.3.1 Place TDAFWP STM SUPP FROM 1B SG Q1N12HV3235A/26 to START (D-HSDP).

19.3.2 Place TDAFWP STM SUPP FROM 1C SG Q1N12HV3235B to START (D-HSDP).

19.3.3 Adjust TDAFWP FCV's.

TDAFWP
TO 1A(1B,1C) SG (D-HSDP)
[] Q1N23HV3228A
[] Q1N23HV3228B
[] Q1N23HV3228C

____Page Completed

****

CAUTION: To prevent inadvertent steamline differential pressure SI, steam generator atmospheric relief valves should be adjusted to provide approximately equal SG demands. Consideration must be given to the steam load supplied to the TDAFWP.

****

20.0 Adjust steam generator atmospheric reliefs to maintain SG pressures at approximately 1005 psig.

1A(1B,1C) SG
PRESS (A-HSDP)
[] Q1N11PI3371A
[] Q1N11PI3371B
[] Q1N11PI3371C

1A(1B,1C) MS ATMOS
REL VLV
[] Q1N11PCV3371A
[] Q1N11PCV3371B
[] Q1N11PCV3371C

21.0 Locally trip all RCPs.

[] 1A RCP BKR DA-04 (139 ft, AUX BLDG)
[] 1B RCP BKR DB-03 (139 ft, AUX BLDG)
[] 1C RCP BKR DC-03 (139 ft, AUX BLDG)

22.0 Isolate the Main Steam system.

22.1 IF inadvertent SI occurs while closing MSIVs,
THEN perform recovery from inadvertent SI using ATTACHMENT 1, RESPONSE TO SPURIOUS OR INADVERTENT SAFETY INJECTION.

22.2 Align MSIV's for local operation.

1A(1B,1C) SG MSIV (G-HSDP)
[] Q1N11HV3369A to LOCAL
[] Q1N11HV3369B to LOCAL
[] Q1N11HV3369C to LOCAL

22.3 Close MSIV's.

1A(1B,1C) SG MSIV's (G-HSDP)
[] Q1N11HV3369A
[] Q1N11HV3369B
[] Q1N11HV3369C

____Page Completed

23.0 IF a LOSP has occurred,
THEN energize emergency sections of 1A and 1C 600 V LCs.

23.1 Verify 1D 600 V LC energized (139 ft, AUX BLDG switchgear rm)

23.2 Locally verify open 1A 600 V LC normal/emergency tie breaker EA-08 (139 ft, AUX BLDG switchgear rm)

23.3 Locally verify closed 1A 600 V LC feeder breakers. (139 ft, AUX BLDG switchgear rm)

[] BKR ED-08
[] BKR EA-09

23.4 Check 1A 600 V LC energized (139 ft, AUX BLDG switchgear rm)

23.5 Verify 1E 600 V LC energized (121 ft, AUX BLDG switchgear rm)

23.6 Locally Open 1C 600 V LC normal/emergency tie breaker EC-08. (121 ft, AUX BLDG switchgear rm)

23.7 Locally close 1C 600 V LC feeder breakers. (121 ft, AUX BLDG switchgear rm)

[] BKR EE-07
[] BKR EC-10

23.8 Check 1C 600 V LC energized. (121 ft, AUX BLDG switchgear rm)

24.0 Align the following A-HSDP components for local operation.

1A
PRZR HTR GROUP
[] BACKUP to LOCAL

1A BATP
[] Q1E21P005A to LOCAL

LTDN ORIF ISO
45(60) GPM
[] Q1E21HV8149A to LOCAL
[] Q1E21HV8149B to LOCAL
[] Q1E21HV8149C to LOCAL

25.0 Align the following G-HSDP components for local operation.

RX VESSEL HEAD
VENT OUTER ISO
[] Q1B13SV2213A to LOCAL

RX VESSEL HEAD
VENT INNER ISO
[] Q1B13SV2214A to LOCAL

____Page Completed

26.0 Align the following C-HSDP components for local operation.

1B BATP
[] Q1E21P005B to LOCAL

1B
PRZR HTR GROUP
[] BACKUP to LOCAL

RX VESSEL HEAD
VENT OUTER ISO
[] Q1B13SV2213B to LOCAL

RX VESSEL HEAD
VENT INNER ISO
[] Q1B13SV2214B to LOCAL

CCW TO
SECONDARY HXS
[] Q1P17MOV3047 to LOCAL

27.0 Verify open the block valve for each operable PRZR PORV.

PRZR PORV
ISO
[] Q1B31MOV8000A (G-HSDP)
[] Q1B31MOV8000B (B-HSDP)

Page Completed

TABLE 1

COMPONENT NUMBER	NAME	MANUAL OPERATOR	FAILED POSITION	OPERATOR DRAWING
Q1E21V340 (1-CVC-HV-8547)	BTRS BYPASS CONTROL	NO	OPEN	U-259973
Q1E21V341 (1-CVC-PCV-8157)	VCT HI PRESS VENT BACK PRESS REG	NO	CLOSED	U-259962
Q1E21V345 (1-CVC-FCV-114B)	REAC MAKEUP WATER TO BLENDER	NO	CLOSED	U-166865
Q1E21V347 (1-CVC-FCV-122)	CHG FLOW REG	NO	OPEN	U-357413
Q1E21V350 (1-CVC-TCV-381B)	REHEAT HX BYPASS	NO	OPEN	U-357413
Q1E21V351 (1-CVC-HCV-142)	RHR TO LETDOWN LINE	NO	CLOSED	U-357413
Q1E21V352 (1-CVC-PCV-145)	LETDOWN PCV	NO	OPEN	U-357413
Q1E21V353 (1-CVC-TCV-143)	LETDOWN HI TEMP DIVERT	NO	FLOW TO VCT	U-357413
Q1E21V354 (1-CVC-FCV-113A)	BORIC ACID TO BLENDER	NO	OPEN	U-357413
Q1E21V356 (1-CVC-HV-8101)	VCT TO VENT HEADER ISO	NO	CLOSED	U-176710
Q1E21V361 (1-CVC-TCV-250)	RECYCLE EVAP FEED DEMIN AUTO	NO	FLOW TO RECYCLE EVAP FIL	U-259971
Q1E21V365 (1-CVC-LCV-115A)	VCT HI LEVEL DIVERT	NO	FLOW TO VCT	U-357413
Q1E21V366 (1-CVC-PCV-251)	RHT VENT ISO	NO	CLOSED	U-259759
Q1E21V367 (1-CVC-LCV-460)	LETDOWN LINE ISO	NO	CLOSED	U-357413
Q1E21V368 (1-CVC-LCV-459)	LETDOWN LINE ISO	NO	CLOSED	U-357413
Q1E21V424A (1-CVC-HV-8170A)	BORON MEAS SYS INLET ISO	NO	CLOSED	U-199001

FARLEY NUCLEAR PLANT

ABNORMAL OPERATING PROCEDURE

FNP-1-AOP-28.1

FIRE OR INADVERTENT FIRE PROTECTION SYSTEM ACTUATION IN THE CABLE SPREADING ROOM

PROCEDURE USAGE REQUIREMENTS-per FNP-0-AP-6	SECTIONS
Continuous Use	**ALL**
Reference Use	
Information Use	

SAFETY RELATED

Approved:

TODD YOUNGBLOOD

Operations Manager

Date Issued: 11/04/2003

C. **PROCEDURE STEPS**

****

CAUTION: If a fire results in a loss of the operating train of charging and the redundant train cannot be quickly recovered, seal cooling to an RCP with less than 2.5 gpm seal leakoff is considered lost.(Ref NSAL-99-005) In that event, the RCP's will be tripped, and the seals will be cooled via RCS natural circulation cooldown.

****

****

CAUTION: If fire results in a loss of all seal cooling, and the RCP seal injection cannot be quickly recovered, neither seal injection nor CCW to the TBHX should be reestablished. Instead, the RCP's will be tripped, and the seals will be cooled via RCS natural circulation cooldown.

****

NOTE:

- Step 1.0 is a continuing action step.
- The operator should remain in this AOP instead of going to FNP-1-EEP-0, REACTOR TRIP OR SAFETY INJECTION. FNP-1-EEP-0, REACTOR TRIP OR SAFETY INJECTION assumes the control room is accessible and functional.
- When performing local actions personnel will have hand lights with them.

1.0 IF equipment control or instrumentation becomes erratic, THEN perform the following.

1.1 Trip the reactor.

1.2 Verify Turbine Tripped

1.3 Trip the Reactor Coolant Pumps

1.4 Proceed to step 3.0.

2.0 Place the unit in mode 3 as rapidly as possible using FNP-1-AOP-17.0, RAPID LOAD REDUCTION.

____Page Completed

3.0 IF ONE of the following conditions occur at anytime during the event, AND cannot be readily restored from the control room:

[] A total loss of RCP seal cooling as indicated by loss of seal injection and loss of CCW to the Thermal Barrier Heat Exchanger.

OR

[] A total loss of the operating train of charging without the ability to quickly restore the redundant train from the control room, and RCP seal leakoff before the loss was less than 2.5 gpm per pump.

THEN PERFORM THE FOLLOWING:

1. Verify the reactor is tripped

2. Verify the Turbine is tripped

3. Verify RCPs are tripped

2. Isolate RCP seals and thermal barriers per ATTACHMENT 14.

NOTE: Step 1.0 or 2.0 must be complete prior to commencing step 4.0.

4.0 Locally verify the reactor trip & bypass breakers open.

5.0 Locally place turbine overspeed lever to TRIP for at least 5 seconds. (TURB BLDG 189 ft)

___Page Completed

6.0 Perform the following:

NOTE: The following sub-step is to prevent a possible loss of charging pump NPSH due to spurious closing of Q1E21LCV115C VCT OUTLET ISO OR Q1E21LCV115E VCT OUTLET ISO.

6.1 Open the RWST to Charging Pump suction valves.

[] Q1E21LCV115B RWST TO CHG PUMP
[] Q1E21LCV115D RWST TO CHG PUMP

WHEN the RWST TO CHG PUMP valves are OPEN
THEN close the following valves:

[] Q1E21LCV115C VCT OUTLET ISO
[] Q1E21LCV115E VCT OUTLET ISO

6.2 Verify the following valves are closed:

[] Chg Pump Recirc to RCS Cold legs Q1E21MOV8885
[] HHSI to RCS CL Iso Q1E21MOV8803A
[] HHSI to RCS Cl Iso Q1E21MOV8803B

6.3 Verify the following valves are open:

[] Chg Pumps to Regenerative HX, Q1E21MOV8108
[] Chg Pumps to Regenerative HX, Q1E21MOV8107

NOTE: In the event of a fire in the cable spreading room, plant communications may be seriously degraded. Refer to ATTACHMENT 12, COMMUNICATIONS to determine which communications systems are reliable.

7.0 Announce "Fire in the Unit 1 cable spreading room. Shifting Unit 1 control room to the hot shutdown panel."

7.1 Establish sound powered phone communication between the hot shutdown panels and control room using Unit 2 sound powered phone circuits.

___Page Completed

NOTE: 1C air compressor should automatically align when 1A 600 V LC emergency section aligns to 1D 600 V LC during a LOSP or SI/LOSP. To ensure adequate supply voltage to class 1E loads and to meet short circuit analysis constraints, only one air compressor, 1C (preferred) or 1A, should be powered from the diesel generator. One air compressor will consume 0.16 MW of diesel generator load.

8.0 Verify instrument air available to Penetration Rooms and containment.

8.1 Check any selected air compressor N1P19C001A,B,or C.running.

8.1.1 If required, start any deselected air compressor from the MCB by taking its associated handswitch to the START/RUN position and returned to AUTO.

8.1.2 IF required, dispatch personnel to the Turbine Building to investigate the operation of the air compressor sequencer per FNP-1-SOP-31.0.

8.1.3 IF required, dispatch personnel to the Turbine Building to start an air compressor with air compressor panel key switch in the LOCAL position per FNP-1-SOP-31.0.

8.1.4 IF required to start 1A Air Compressor, THEN perform the following.

8.1.4.1 Verify 1C air compressor handswitch in OFF

8.1.4.2 If required, place BKR DF13 SYNCH SWITCH in MAN.

8.1.4.3 Close breaker DF13.

8.1.4.4 Verify 1H 4160V bus energized.

8.1.4.5 Energize 1G 600V LC

[] BKR DH01-1 Closed
[] BKR EG02-1 Closed

8.1.4.6 Start 1A Air Compressor using FNP-1-SOP-31.0.

8.1.5 IF no Unit 1 air compressor can be placed in service, AND 2C air compressor is available THEN align 2C air compressor to Unit 1 per FNP-1-SOP-31.0.

Page Completed

Step 8 continued on next page.

8.1.6 Perform the following to establish instrument air to containment and the Penetration Rooms.

NOTE: HV3611, CTMT Instrument Air Supply Valve,is a CTMT Phase B isolation valve, TRM 13.6.2.

8.1.6.1 Manually jack open the following valves.

[] IA TO PENE RM N1P19HV3885 (lower equipment room)
[] IA TO PENE RM N1P19HV3825 (lower equipment room)
[] IA TO CTMT Q1P19HV3611 (100 ft, PPR)

8.2 IF instrument air NOT restored,
THEN perform the following actions.

8.2.1 Align N2 to PORV's using FNP-1-SOP-62.1, BACK-UP AIR OR NITROGEN SUPPLY TO PRESSURIZER POWER OPERATED RELIEF VALVE. (Aux Bldg. 100')

8.2.2 Start an emergency air compressor and align emergency air supply to atmospheric relief valves and/or TDAFW Pump using FNP-1-SOP-62.0, EMERGENCY AIR SYSTEM.

___Page Completed

9.0 Dispatch personnel to perform the following:

9.1 Open the following power supply breakers.

600V MCC 1U Room 347
[] FU-A6 Power supply to HHSI to RCS CL ISO Q1E21MOV8803A
[] FU-E3 Power supply to Chg Pumps to Renegenrative HX Q1E21MOV8107
[] FU-F4 Power supply to Chg Pump Mini-flow Iso Q1E21MOV8106
[] FU-R3 Power supply to HHSI to RCS CL ISO Q1E21MOV8803B-A

600V MCC 1V Room 344

[] FV-N5 Power supply to Chg Pump Recirc to RCS Cold Legs Q1E21MOV8885.
[] FV-A4 Power supply to HHSI to RCS CL ISO Q1E21MOV8803B Rm 334
[] FV-A6 Power supply to 1A Chg Pump Mini-flow Iso Q1E21MOV8109A
[] FV-E3 Power supply to Chg Pumps to Renegenrative HX Q1E21MOV8108
[] FV-T3 Power supply to 1C Chg Pump Mini-flow Iso Q1E21MOV8109C
[] FV-T3 Power supply to 1B Chg Pump Mini-flow Iso Q1E21MOV8109B

9.2 Locally verify the following valves are open:

[] Chg Pumps to Renegenrative HX Q1E21MOV8107 Rm 223
[] Chg Pumps to Renegenrative HX Q1E21MOV8108 Rm 223
[] Chg Pump Mini-flow Iso Q1E21MOV8106 Rm 170
[] 1A Chg Pump Mini-flow Iso Q1E21MOV8109A Rm 181
[] 1B Chg Pump Mini-flow Iso Q1E21MOV8109B Rm 174
[] 1C Chg Pump Mini-flow Iso Q1E21MOV8109C Rm 173

9.3 <u>IF</u> FCV-122 is not available in automatic or manual control as indicated by high charging flow or erratic valve oscillation,THEN perform the following:

9.3.1 Establish continuous communications between the HSD Panel Control Room and CHG FLOW FK-122.

9.3.2 Isolate charging flow by closing Q1E21V134B.

9.3.3 Open charging flow regulator bypass Q1E21V581.

9.3.4 Slowly open charging flow regulator bypass Q1E21V135(1-CVC-V-8403) to establish and manually control charging flow. (Flow ind on A HSD panel N1E21FI122B)

9.3.5 <u>IF</u> leak-by is found to exist on Q1E21V135(1-CVC-V-8403), <u>THEN</u> charging flow regulator bypass Q1E21V581 may be throttled to control bypass flow.

9.3.6 <u>WHEN</u> charging flow is controlled on the manual bypass valve,
<u>THEN</u> ensure the following valves are closed:

[] Charging flow regulator inlet Q1E21V134B(1-CVC-8402B).
[] Charging flow regulator outlet Q1E21V134A(1-CVC-8402A).

Step 9 continued on next page.

___Page Completed

****

CAUTION: To prevent potential seal damage, neither seal injection nor CCW cooling should be restored to a RCP which has lost both seal injection and CCW cooling.

****

28.0 Maintain pressurizer level 20-60%.

28.1 Raise pressurizer level as follows.

28.1.1 Raise charging flow

OR

28.1.2 Raise seal water injection flow.

OR

28.1.3 Manually throttle open Q1E21MOV8803A or B, HHSI TO RCS CL ISO, to control pressurizer level.

Step 28 continued on next page.

___Page Completed

28.2 Reduce pressurizer level as follows.

28.2.1 Reduce charging flow.

OR

28.2.2 Place an additional letdown orifice on service.

LTDN ORIF ISO
45(60) GPM
[] Q1E21HV8149A
[] Q1E21HV8149B
[] Q1E21HV8149C

OR

****

CAUTION: The probability of valve failure increases if reactor vessel head vent valves are cycled excessively.

****

****

CAUTION: Personnel injury may result from opening reactor vessel head vent valves when personnel are in containment.

****

28.2.3 Control one train of RX vessel head vents.

A TRN	B TRN
RX VESSEL HEAD VENT OUTER ISO	RX VESSEL HEAD VENT OUTER ISO
[] Q1B13SV2213A	[] Q1B13SV2213B
RX VESSEL HEAD VENT INNER ISO	RX VESSEL HEAD VENT INNER ISO
[] Q1B13SV2214A	[] Q1B13SV2214B

28.3 IF letdown NOT effective for reducing pressurizer level, THEN perform ATTACHMENT 6, LOCAL CONTROL OF LETDOWN.

___Page Completed

004K5.49 001/2/1/RCS H2/MEM 2.7/3.3/NEW/FA011005/RO/CVR

In preparation for the upcoming refueling outage on Unit 1, Chemistry is performing a chemical degas of the RCS to reduce RCS hydrogen concentration to <5cc/kg.

Which one of the following is the correct reason for decreasing the Hydrogen concentration in the RCS?

A. To minimize RCS level indication fluctuations in the tygon hose.

B. To minimize the potential for a crud burst upon opening of the RCS.

C. To minimize corrosion in the RCS during shutdown/draindown conditions.

D. To minimize safety hazard of flammable/explosive gas during maintenance activites.

A. Incorrect. Candidate may believe that if too much H2 were in the system it could come out of solution and cause tygon hose level fluctuations. This is not the reason we degas to get rid of H2, just a by product.

B. Incorrect. We do some chemical additions such as H2 peroxide to scavenge oxygen and to cause a crud burst. The candidate may believe that opening the RCS and having too much H2 and could cause a crud burst.

C. Incorrect. Lowering the pressure in the RCS and opening up the RCS Systems allows any H2 to come out of solution and exit the system when the systems are opened. To ensure workers are not exposed to flammable atmospheres, the RCS H2 concentration is reduced to <5cc/kg prior to opening up RCS Systems. H2 is ADDED AT POWER to combine with O2 in the presence of Neutron flux for corrosion control.

D. Correct. **Minimize safety hazard of flammable/explosive gas during maintenance activites.**

Lowering the pressure in the RCS and opening up the RCS Systems allows any H2 to come out of solution and exit the system when the systems are opened. To ensure workers are not exposed to flamable atmospheres, the RCS H2 concentration is reduced to <5cc/kg prior to opening up RCS Systems.

004K5.49 Chemical and Volume Control
K5 Knowledge of the operational implications of the following concepts as they apply to the CVCS: (CFR: 41.5/45.7)

K5.49 – Purpose and method of hydrogen removal from the RCS before opening system: explosion hazard, nitrogen purge

11. Discuss the operation and alignment of each major component including precautions and limitations of operation, and applicable procedures, associated with the Chemical and Volume Control System including: (OPS40301F11)
• VCT Tank
• VCT Level Control Valve (LCV-115A)

4. Identify any special considerations such as safety hazards and plant condition changes that apply to the Chemical and Volume Control System (OPS52101F04).

I. RCS Cooldown to 340°F

Initial

* Additional I-131 monitoring for fuel integrity:

ENV Sample RCS 1/4 hours for all parameters listed in Table 1 except hydrogen peroxide. Maintain this sample frequency until RHR is placed in service. _____

NOTE: Whenever gas is added to a WGDT and the hydrogen recombiner is NOT in service, the WGDT must be sampled prior to the addition for compatibility, and after the addition to satisfy STP-424.

NOTE: VCT GAS CHANGEOUT - The goal of VCT burping is to ensure that following Chemical Degassing that the hydrogen concentration of the VCT gas space is approximately 4% or lower. This is required to prevent the formation of a potentially flammable mixture of gases from occurring in the VCT upon the addition of Hydrogen Peroxide for the purpose of cobalt solubility (forced oxidation). If following chemical degassing the VCT H_2 is ≥ 4% additional burping of the VCT will be required.

I. Soon after Rx Shutdown Hydrogen will be isolated to the VCT and a burp will be performed on the VCT and Nitrogen will be aligned. The purpose of this burp is to ensure that Nitrogen can be aligned properly and expected results achieved. It would be anticipated that the Nitrogen would increase to > 80% following this burp.

II. Monitoring of the VCT will continue at a frequency of once per 8 hours with burping performed as necessary. Additional burps should be performed as deemed necessary. It is suggested that burping be performed to maintain the nitrogen concentration > 80% in the VCT. It should be noted that prior to chemical degassing that the VCT hydrogen concentration will increase as hydrogen comes out of solution and goes into the gas space.

III. Approximately 8-12 hours prior to chemical degassing close attention should be given to the VCT Hydrogen concentration with efforts made to have it < 10% at the time of peroxide injection for chemical degassing. Note that chemical degassing is performed with the VCT level held high (90-95%) and lowered once the RCS and PZR hydrogen is <5 cc/kg. As this level is lowered OPS should ensure that Nitrogen is aligned to the VCT, this will allow nitrogen to be drawn into the VCT and lower any remaining hydrogen in the VCT.

IV. Once chemical degassing has lowered the RCS and PZR hydrogen to <5 cc/kg and the level in the VCT is lowered the VCT hydrogen must be verified to be <4%. If the VCT is greater than 4% hydrogen, further burping is required prior to the addition of peroxide for forced oxidation. This burping can impact the outage critical path schedule.

3.41 IF RCS pressure has NOT been maintained greater than 100 psig since the most recent RCS filling and venting, THEN the RCS loops are considered to be "not filled" per Technical Specification 3.4.8.

3.42 Prior to manually blocking any automatic SI signal, the RCS must be borated to the cold shutdown boron concentration. **{AIT 2003204688 – NSAL-02-14}**

4.0 Technical Specifications Data Requirements

4.1 The RCS temperature, pressure and pressurizer temperature shall be determined to be within limits by performing FNP-1-STP-35.0, REACTOR COOLANT SYSTEM PRESSURE AND TEMPERATURE/PRESSURIZER TEMPERATURE LIMITS VERIFICATION.

4.2 The flow rate through the RCS shall be determined to be greater than 3000 gpm prior to the start and at least once per hour during a reduction in RCS boron concentration by recording the required data per FNP-1-STP-1.0, OPERATIONS DAILY AND SHIFT SURVEILLANCE REQUIREMENTS, miscellaneous section.

4.3 IF primary OR secondary coolant temperature is ≤ 70°F, THEN verify that pressure in each side of the steam generators is <200 psig by performing FNP-1-STP-48.0, STEAM GENERATOR PRESSURE/TEMPERATURE VERIFICATION.

4.4 WHEN the temperature of one OR more of the RCS cold legs is ≤ 325°F, except when the reactor vessel head is removed, THEN ensure compliance with Tech. Spec. 3.4.12, Low Temperature Overpressure Protection (LTOP) System.

5.0 Instructions

5.1 IF the RCS is to be opened for maintenance OR refueling AND required by Chemistry (Chemical degas not planned), THEN perform the following:

____ / ____ * 5.1.1 Commence venting the non-condensable gases from the pressurizer gas space by aligning the sample system path from the pressurizer gas space to the letdown line per FNP-1-SOP-2.5, RCS CHEMICAL ADDITION, VCT GAS CONTROL AND DEMINERALIZER OPERATION, section 4.5. Continue venting until RCS hydrogen concentration is < 5 cc/kg. **{CMT 0004609}**

____ / ____ 5.1.2 Increase the purification flow rate to the maximum attainable rate not to exceed approximately 130 gpm.

*5.33 IF solid plant operation is to be established, THEN fill the pressurizer to the solid plant condition as follows:

CAUTION:	**After any significant change in charging flow, the reactor coolant pump seal flow should be checked and adjusted as required to maintain between 6-13 gpm seal flow to each RCP.**

CAUTION:	**When the water in the pressurizer enters the RCS loops, RCS temperature will rise 5-10 degrees.**

CAUTION:	**The temperature differential between the pressurizer and the RCS must not exceed 320°F. The pressurizer liquid, surge line and loop B hot leg temperatures should be monitored to ensure that a pressurizer outsurge is taking place whenever the pressurizer is being cooled or filled. This will prevent thermal stratification from taking place. A pressurizer outsurge is indicated by surge line temperature approximately equal to pressurizer liquid temp and greater than "B" Hot Leg temperature.**

NOTE:	**While taking the RCS solid or maintaining the RCS on solid plant pressure control, a strategy for RCS pressure control is to maintain the charging flow stable and adjust the letdown flow as necessary. A pre-job briefing is recommended to include actions to take if FCV-122 acts erratically which may include isolating letdown and securing RCPs.**

____ / 5.33.1 Chemistry has been notified to perform chemical degas prerequisites.

____ / 5.33.2 IF purging pressurizer steam space per step 5.1.1, THEN notify Chemistry to maximize pressurizer steam space purge time to the VCT by minimizing the time spent sampling other streams that interfere with pressurizer steam space purge.

____ / 5.33.3 Chemistry has completed chemical degas prerequisites (OLL 1793).

CHEM

5. 005A4.02 001/2/1/RHR/C/A 3.4/3.1/BANK/FA011005/RO/

Given the following plant conditions:

- Unit 1 is performing a plant cooldown using the B Train RHR System.
- 1B RHR pump is running with:
  - FCV-603B, 1B RHR HX DISCH VLV, 75% open
  - FCV-605B, RHR HX BYP valve, 75% open.

FCV-605B, RHR HX BYP valve, fails closed due to a loss of air. Which one of the following describes the effect on the total RHR flow and the cooldown rate of the plant?
Assume NO operator action.

A. Total RHR flow will increase and cooldown rate will decrease.

B. Total RHR flow will increase and cooldown rate will increase.

C. Total RHR flow will decrease and cooldown rate will decrease.

D. Total RHR flow will decrease and cooldown rate will increase.

D175041, D205041
A. Incorrect - Total flow decreases and cooldown rate increases

B. Incorrect - total flow decreases and cooldown rate increases

C. Incorrect - total flow decreases and cooldown rate increases

D. Correct - **Total RHR flow will decrease and cooldown rate will increase.**
FCV 605 failing closed will stop all flow bypassing the hx and force all remaining flow through the hx. Increased flow through the hx will decrease the temperature of water returning to the RCS thereby increase the cooldown rate. Bypass FCV failing closed will decrease the total flow through the system since the total flowmeter FIS605B is downstream of both 605B and 603B.

005A4.02 Ability to manually operate and/or monitor in the control room:
Heat exchanger bypass flow control.

Predict and explain the following instrument/equipment response expected when performing Residual Heat Removal System evolutions including the fail condition, alarms, and trip setpoints (OPS40301K08)

Discuss the operation and alignment of each major component including precautions and limitations of operation, and applicable procedures, associated with the Residual Heat Removal System including (OPS40301K11)

RHR-40301K07 #9

closed on the on-service RHR train will raise RCS temperature, causing RCS pressure to rise. Conversely, opening this valve will lower RCS temperature that will lower RCS pressure. The valves fail open on a loss of air. They are equipped with mechanical stops to limit LHSI flow to a maximum of 4500 gpm in recirculation alignment to ensure adequate NPSH for the RHR pumps if a loss of air occurs during recirculation. These valves are located in the RHR heat exchanger room on the 83' elevation of the Aux. Building.

RHR HX Bypass Flow Control Valves (FCV-605A and B)

The valves (FCV-605A and B) are located in the heat exchanger bypass line. They are air-operated butterfly valves, which are controlled by flow controllers on the MCB. The controllers can be set to automatic or manual. When the RHR heat exchanger flow control valves (HCV-603A and B) are adjusted to increase or decrease the flow through the heat exchangers, the flow controllers automatically adjust the bypass flow control valves to maintain the system flow rate to the value set on the flow controllers. This is normally set at 3000 gpm when controlled in auto. Normally the controllers are operated in manual. When the controller is operated in manual, the operating procedure will have the operator verify a minimum of 500 gpm flow through the pump to prevent dead heading the pump. This allows the operator to have control over RCS temperature and eliminates the possibility an instrument failure causing a perturbation. These valves fail closed on a loss of air.

RHR Pump Miniflow (FCV-602A and B)

To ensure that the RHR pumps do not overheat or vibrate at low flows, a miniflow return line is downstream of each RHR heat exchanger and discharges to the pump suction lines. A control valve (FCV-602A and B) located in each miniflow line is actuated by a signal from the pump discharge flow transmitters (FIS-602A and B). The control valves open when the RHR pump discharge flow is less than 750 gpm (Unit I), 1334 gpm (Unit II), and close when the flow exceeds 1399 gpm (Unit I), 2199 gpm (Unit II).

FCV-602A is located in the RHR heat exchanger room on the 83' elevation of the Aux. Building. FCV-602B is located above the waste evaporator feed pump.

Shutdown

The initial phase of plant shutdown is accomplished by transferring decay heat from the RCS to the secondary system via the steam generators.

When the reactor coolant temperature and pressure are reduced to approximately 350°F and 375 psig, the second phase of shutdown starts. The RHR system may be placed in operation approximately four hours after reactor shutdown. Prior to placing RHR in operation, the RHR system is prepared for cooldown by placing on recirc and having the boron concentration verified to be greater than or equal to the required cold shutdown boron concentration. An appendix is provide for verifying boron concentration following a Safety Injection.

In order to minimize thermal shock on the components, the startup of the RHR system includes a warm up period when the reactor coolant flow through the RHR heat exchangers is limited. The rate of heat removal from the reactor coolant is manually controlled by regulating the RCS flow through the RHR heat exchanger. By adjusting the control valves (HCV-603A and B) downstream of the RHR heat exchangers, the average temperature of the RHR heat exchanger return flows may be changed. To maintain total flow at desired rate, heat exchanger bypass flow (FCV-605A and B) must be in automatic or adjusted manually.

The plant cooldown rate is limited by the RCS equipment cooling rates, which are based on allowable stress limits as well as the operating temperature limits of the CCW system. See Tech. Spec. 3.4.3 for RCS cooldown limitations. As reactor coolant flow through the RHR heat exchanger is increased, the reactor coolant temperature decreases.

As cooldown continues, the pressurizer is filled with water, and the RCS is operated in the solid water condition. At this stage, RCS pressure is maintained by regulating the charging flow and the letdown flow (via HCV-142 to the low pressure letdown line and/or pressure control valve PCV-145).

After the reactor coolant pressure has been reduced and the temperature is 140°F or lower, the RCS may be opened for refueling or maintenance.

Refueling

Either RHR train may be used to transfer borated water from the RWST to the refueling cavity for refueling. Prior to performing the system alignment for filling the cavity, the reactor

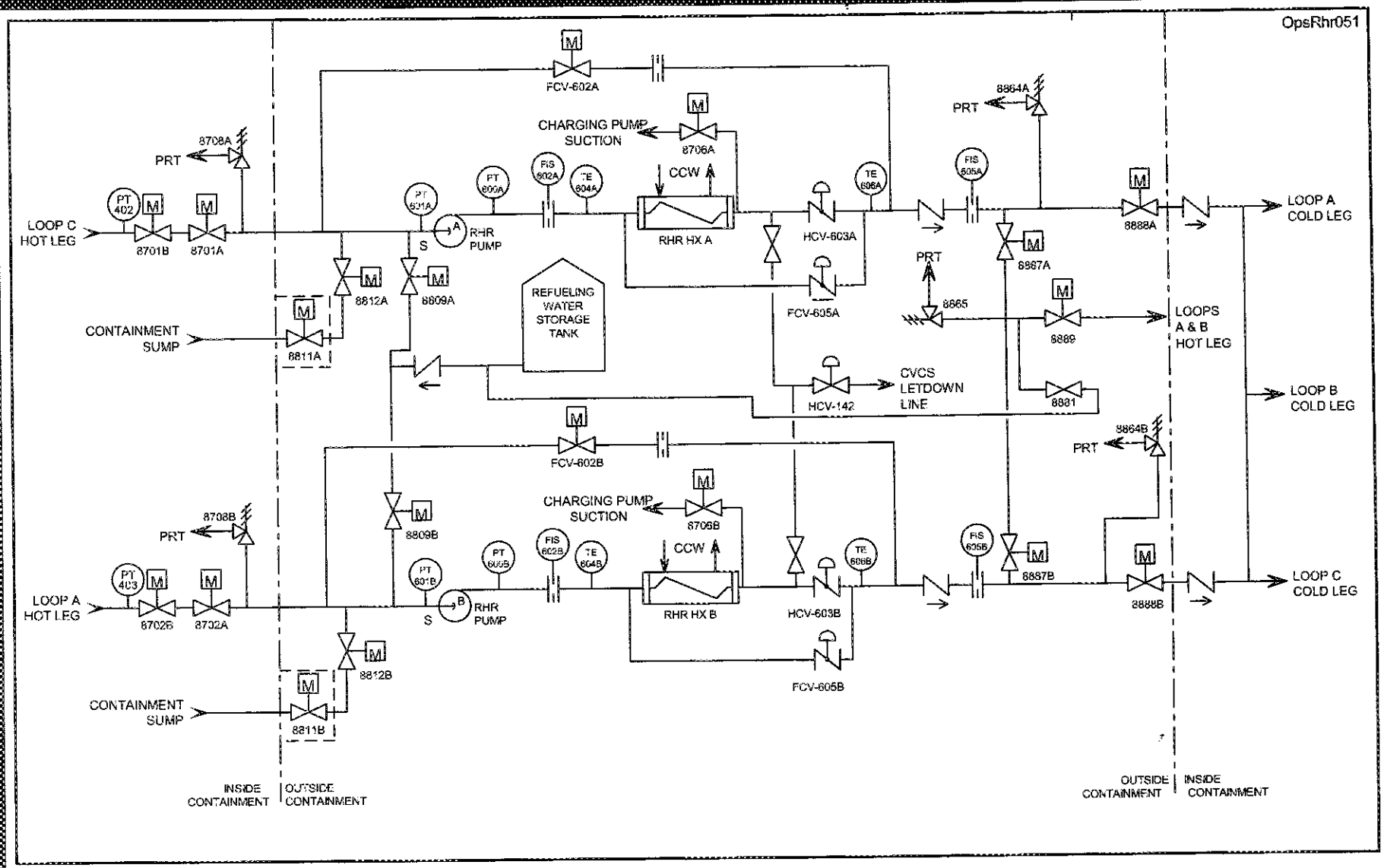

Residual-Heat Removal System

Figure 2

RHR Heat Exchanger Outlet Flow (FT-605A and B)

Flow transmitters (FT-605A and B), located on the discharge lines of the heat exchangers, provide the signal for maintaining a flow of at least 3000 gpm through the RHR system by controlling the heat exchanger bypass valves (FCV-605A and B). The indication and a low alarm are set at 2900 gpm on the MCB. See Figure 13.

RHR Discharge Cross Connect Valves (MOV-8887A and B)

MOV-8887A and B are motor-operated valves that can be opened to cross-connect trains A and B of the RHR system. These two valves also isolate each train from the hot leg recirculation line (8889) and the return to the RWST (8881). This return connects to the suction piping to all RHR, Charging and Containment Spray Pumps. These valves are located in the Aux. Bldg 121' piping penetration room.

RHR Discharge to RCS Hot Legs Isolation Valve (MOV-8889)

MOV-8889 is a motor operated valve that isolates RHR discharge to the RCS hot legs A and B. This flow path would be used 7.5 hours following a Loss of Coolant Accident. This valve is located in the 121' piping penetration room.

Pressure Relief Valves (8864A and B and 8865)

Pressure relief valves (8864A and B and 8865) are located in the heat exchanger discharge lines and the hot leg recirculation line. They are designed to relieve at 600 psig for the protection of the RHR system components, and discharge into the PRT. These relief valves are all located in the 121' piping penetration room of the Aux. Building.

RHR Discharge to RCS Cold Legs (MOV-8888A and B)

MOV-8888A and B, are motor-operated valves that isolate the RHR discharge to the cold legs. They are normally open during plant operation and are controlled from the MCB. Unit 1 MOV-8888A is "A" train and MOV-8888B is "B" train while on unit 2 MOV-8888B is on "A" train and MOV-8888A is "B" train. These valves are located in the 121' piping penetration room.

6. 005K2.01 001/2/1/RHR PWR/C/A 3.0/3.2/MOD/FA011005/RO/

Given the following:

- Unit 1 is operating at 100% power.
- Unit 2 is in mode 5.

Both units have just experienced a Loss of Site Power (LOSP). The power for the 2A Residual Heat Removal (RHR) pump will be supplied from which one of the following?

All systems and components operate properly.

A. 1-2A Diesel Generator through the 2F 4160 Volt bus.

B. 1B Diesel Generator through the 2G 4160 Volt bus.

C. 2B Diesel Generator through the 2G 4160 Volt bus.

D. 1C Diesel Generator through the 2H bus to the 2F 4160 Volt bus.

OPS 40301K - A RHR pump is the A train pump

Bus	Normal	Alternate	Emergency
4160V Bus F	S/U Xfmr 1(2)A	S/U Xfmr 1(2)B	1/2A Diesel Gen
4160V Bus G	S/U Xfmr 1(2)B	S/U Xfmr 1(2)A	1(2)B Diesel Gen

Above is shown in the lesson plan for a single unit LOSP on Unit 2 with no other failures. In the case of a dual unit LOSP, IAW lesson plan OPS-52103E DG sequencers, 1-2A DG will go to unit 1 and 1C DG will go to unit 2. 1C DG will align to the 2H 4160V bus and breaker DF13 will close to supply power to 2F bus.

A. Incorrect - The 1-2A DG will align to the 1F 4160v bus since unit 1 is affected by the LOSP.

B. Incorrect - 1B DG and the 1G 4160v bus is B train

C. Incorrect - 2B DG and the 2G 4160v bus is B train

D. Correct - **1C Diesel Generator through the 2H bus to the 2F 4160 Volt bus.**
1C DG will align to the 2H 4160V bus and breaker DF13 will close to supply power to 2F bus.

005K2.01 Residual Heat Removal Knowledge of the bus power supplies to the following: RHR pumps

Describe the effect on the Residual Heat Removal of a loss of an AC or DC bus or instrument air (OPS40301K06).
List the automatic actions associated with the Diesel Generator Sequencers System components and equipment during normal and abnormal operations including (OPS40102D07).

modified from RHR-40301K06 #3

QUESTIONS REPORT

for 005k2.01 Questions

RHR-40301K06 003/HLT/LOCT/SOIT/SOCT/RO/C/A (LEVEL 2/3) SYS/005K2.01///LOCT/SOCT/4

modified from thy

Unit 1 is operating at 100% power. Unit 2 has experienced a loss of site power (LOSP) while in mode 5. The power for the 2A residual heat removal (RHR) pump will be supplied from the;
(Assume all systems and components operate properly.)

A. 1-2 A Diesel Generator through the 2F 4160 Volt bus.

B. 1B Diesel Generator through the 2G 4160 Volt bus.

C. 2B Diesel Generator through the 2G 4160 Volt bus.

D. 1C Diesel Generator through the 2F 4160 Volt bus.

OPS 40301K - A pump is the A train pump

Bus	Normal	Alternate	Emergency
4160V Bus F	S/U Xfmr 1(2)A	S/U Xfmr 1(2)B	1/2A Diesel Gen
4160V Bus G	S/U Xfmr 1(2)B	S/U Xfmr 1(2)A	1(2)B Diesel Gen

A. Correct - The 1-2A DG will align to the 2F 4160v bus since unit 1 is not affected by the LOSP
B. Incorrect - 1B DG and the 1G 4160v bus is B train
C. Incorrect - 2B DG and the 2G 4160v bus is B train
D. Incorrect - The 1C DG will start but will not align to any bus

pump while the other pump is in operation. In addition to the RHR duty, the pumps are used for transferring refueling water before and after a refueling operation. The RHR pumps are located in their respective RHR pump rooms (83' elevation of the Aux Bldg).

Each RHR pump has a design flow rate of 3750 gpm at a design head of 280 feet. RHR/LHSI pump flows must be within the range of 4300 - 4500 gpm during cold or hot leg recirculation. These flow limitations ensure that the ECCS flow rate calculations are bounding and that adequate NPSH is available for the RHR/LHSI pumps. Each pump is driven by a single speed, 400-hp motor powered from a 4160V safeguard bus. Pump A is powered from 4160V F, and pump B is powered from 4160V G.

The two pumps are centrifugal units with mechanical seals to prevent reactor coolant leakage to the atmosphere. The motors are coupled to the pump shafts to allow the motors to be pulled for maintenance without having to pull the pump from its casing. The seals are cooled by RCS fluid circulated through an external heat exchanger cooled by CCW. Loss of CCW (low flow) annunciates on the MCB if the pump is running.

The pumps are controlled from the MCB and will automatically trip on an overcurrent, on a ground fault, and on a load shed signal. An overload condition resulting in a pump trip will actuate an annunciator on the MCB. The pumps will auto start on a safety injection and inject water into the RCS cold legs when RCS pressure is less than shut-off head of the pumps.

Pressure indicators PI-601A and B will provide local indication of RHR pump suction pressure but are normally isolated.

Each RHR pump room has a train-related room cooler that uses Service Water to cool the room . When the BOP handswitch for the room cooler is in "AUTO", it starts whenever the RHR pump starts. The room cooler also starts whenever a safety injection signal is present. The room cooler is considered attendant equipment for the RHR pump therefore it must be OPERABLE for the pump to be OPERABLE. Further discussion of the room coolers can be found in the AUXILIARY BUILDING HVAC lesson plan.

RHR Pump Discharge Pressure (PT-600A and B)

The pump discharge pressure transmitters give MCB indication and a high pressure alarm (587 psig). See Figure 13. A high pressure alarm may be indicative of an increase in RCS pressure

TABLE 3
POWER SUPPLIES

LOAD	SUPPLY	Control Power
RHR Hx B Bypass Flow Control Valve (FCV-605B)	Instrument Air	120 Vital AC Panel D

Bus	Normal	Alternate	Emergency
4160V Bus F	S/U Xfmr 1(2)A	S/U Xfmr 1(2)B	1/2A Diesel Gen
4160V Bus G	S/U Xfmr 1(2)B	S/U Xfmr 1(2)A	1(2)B Diesel Gen

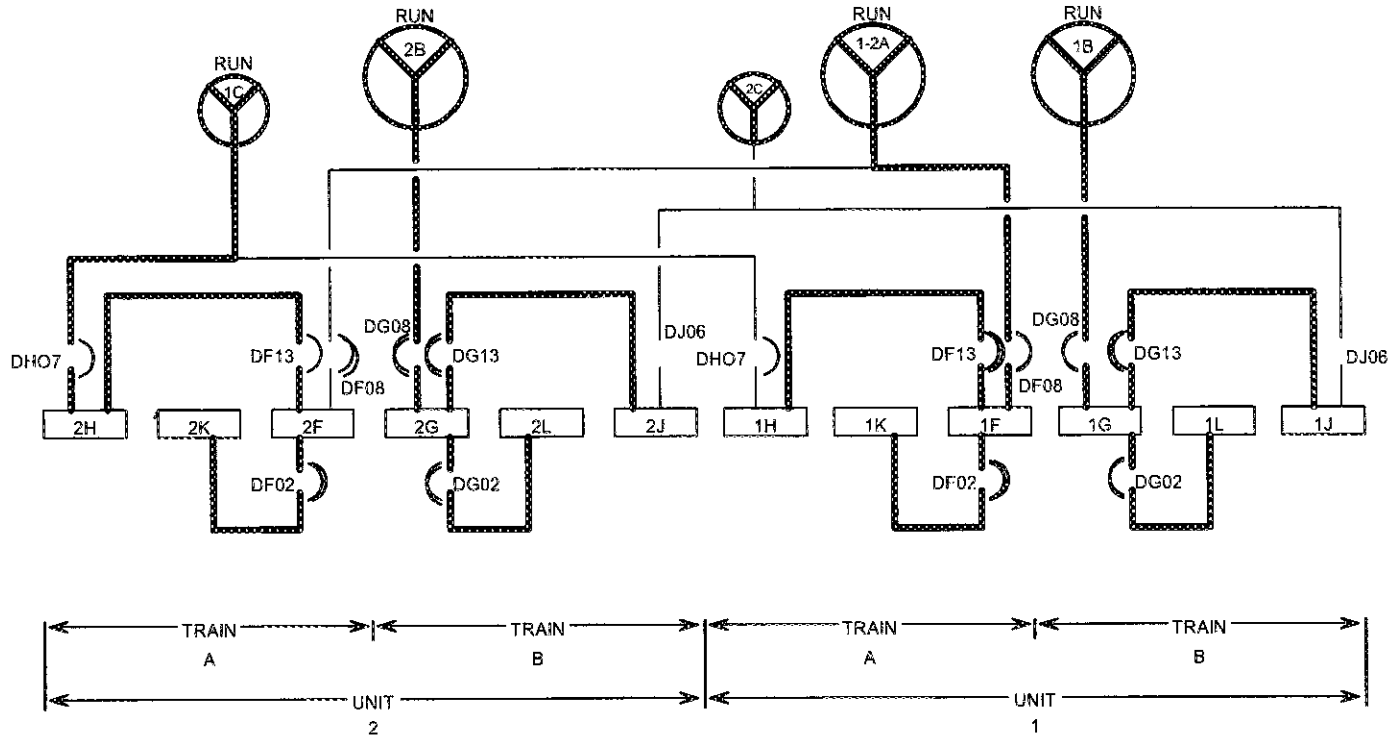

NOTES

DGs 1-2A, 1B, 2B, AND 1C START AND ALIGN AS SHOWN. DG 1-2A ALIGNS TO BUS 1F, AND, UPON COMPLETION OF THE B1F LOSP SEQUENCER RUN, DF13-1 CLOSES. DG 1C ALIGNS TO BUS 2F THROUGH DH07-2 AND DF13-2. B2F LOSP SEQUENCER RUNS. DG 1B ALIGNS TO BUS 1G, AND THE B1G LOSP SEQUENCER RUNS. DG 2B ALIGNS TO BUS 2G, AND THE B2G LOSP SEQUENCER RUNS.

Dual-Unit LOSP, No Failures

Figure 8

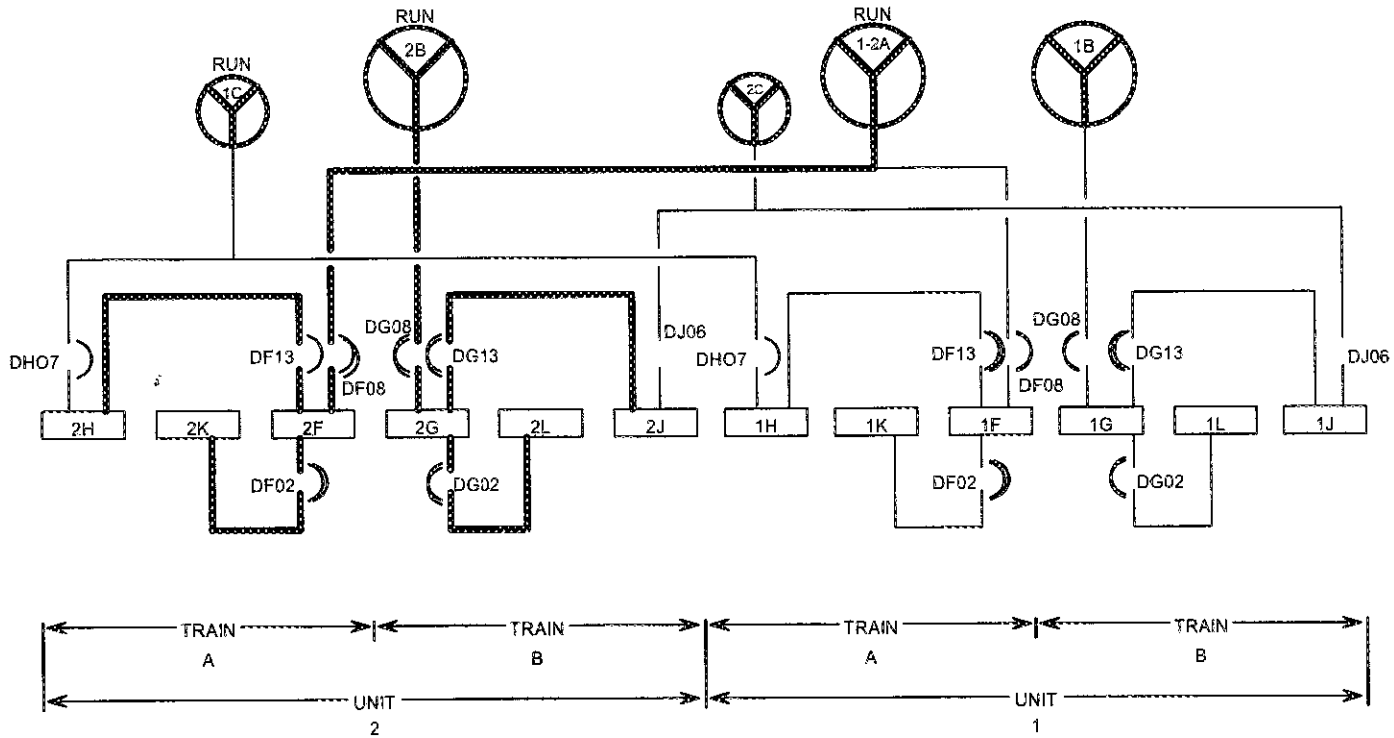

NOTES

DGs 1-2A; 2B, AND 1C START. DG 1C DOES NOT ALIGN TO BUS 2H. DG 1-2A ALIGNS TO BUS 2F, AND B2F SEQUENCER RUNS. UPON COMPLETION OF B2F LOSP SEQUENCER RUN, DF13-2 CLOSES. DG 2B ALIGNS TO BUS 2G, AND THE B2G SEQUENCER RUNS.

LOSP Unit 2, No Failures

Figure 6

7. 006G2.1.33 001/2/1/TS 3.5.1/C/A 3.4/4.0/BANK/FA011005/RO/CVR

Unit 1 is operating at 100% power on 3/19. 1A ACCUM CHECK VLV is experiencing seat leak-by. Given the following accumulator indications:

TIME	0200	0300	0400	0500
Level (%)	54	56	58	59
Pressure (psig)	603	635	650	655
Boron (ppm)	2205	2198	2195	2190

Assuming no operator action, what is the latest time that the plant can enter Mode 3 and still comply with Tech Spec requirements?

REFERENCES PROVIDED

A. Before 0400 on 3/20

B. Before 1000 on 3/20

C. Before 1100 on 3/20

D. Before 0900 on 3/22

Tech Spec 3.5.1 **Reference provided**

A. Incorrect. This is the time to enter Condition C which requires entry into MODE 3 in the next 6 hours, but it does not correctly identify the time to BE in Mode 3.

B. Correct. **Before 1000 on 3/20**
Pressure is out of required TS band at 0400 and requires correcting within 24 hours per Condition B. If not corrected, Condition C is then entered requiring Mode 3 entry in the following 6 hours (0400 3/19 + 24 hour completion time condition B + 6 hours completion time condition C = 1000 3/20).

C. Incorrect. This would be correct if the Volume was the only parameter which made the accum inoperable per condition B (0500 3/19 + 24 hour completion time condition B + 6 hours completion time condition C = 1100 3/20).

D. Incorrect. This would be correct if the Boron concentration was the only parameter which made the accum inoperable per condition A (0300 3/19 + 72 hour completion time condition A + 6 hours completion time condition C = 0900 3/22).

006G2.1.33
006 Emergency Core Cooling
2.1 Conduct of Operations
G2.1.33 – Ability to recognize indications for system operating parameters which are entry-level conditions for technical specifications.

Identify and apply the following Technical Specifications or TRM requirements, including the bases and attendant equipment, associated with the Emergency Core Cooling System (OPS52102B01).

- 3.5.1 Accumulators
- 3.5.2 ECCS—Operating
- 3.5.3 ECCS—Shutdown
- 3.5.4 Refueling Water Storage Tank (RWST)
- 2.1.1 Reactor Core Safety Limits

ECCS-52102B01 #2

3.5 EMERGENCY CORE COOLING SYSTEMS (ECCS)

3.5.1 Accumulators

LCO 3.5.1 Three ECCS accumulators shall be OPERABLE.

APPLICABILITY: MODES 1 and 2,
MODE 3 with RCS pressure > 1000 psig.

----------NOTE----------
In MODE 3, with RCS pressure > 1000 psig, the accumulators may be inoperable for up to 12 hours to perform pressure isolation valve testing per SR 3.4.14.1.

ACTIONS

CONDITION	REQUIRED ACTION		COMPLETION TIME
A. One accumulator inoperable due to boron concentration not within limits.	A.1	Restore boron concentration to within limits.	72 hours
B. One accumulator inoperable for reasons other than Condition A.	B.1	Restore accumulator to OPERABLE status.	24 hours
C. Required Action and associated Completion Time of Condition A or B not met.	C.1	Be in MODE 3.	6 hours
	AND		
	C.2	Reduce RCS pressure to ≤ 1000 psig.	12 hours
D. Two or more accumulators inoperable.	D.1	Enter LCO 3.0.3.	Immediately

0300 3/19 + 72 hrs CB
0300 3/22 + 6 hrs = 0900 3/22

Deleted: 1

0400 3/19 + 24 hrs
0400 3/20 + 6 hrs = 1000 3/20

N2

Boron alone: (A) m-3 0900 3/22 + Cond C 0300 3/22

N2 alone: ✓ (B) 1000 3/20 + (C) 0400 3/20

Vol alone: (B) 1100 3/20 + 0500 3/20

SURVEILLANCE REQUIREMENTS

SURVEILLANCE		FREQUENCY
SR 3.5.1.1	Verify each accumulator isolation valve is fully open.	12 hours
SR 3.5.1.2	Verify borated water volume in each accumulator is ≥ 7555 gallons (31.4%) and ≤ 7780 gallons (58.4%). 0500	12 hours
SR 3.5.1.3	Verify nitrogen cover pressure in each accumulator is ≥ 601 psig and ≤ 649 psig. 0400	12 hours
SR 3.5.1.4	Verify boron concentration in each accumulator is ≥ 2200 ppm and ≤ 2500 ppm. 0300	31 days AND -------NOTE------- Only required to be performed for affected accumulators ---------- Once within 6 hours after each solution volume increase of ≥ 12% level, indicated, that is not the result of addition from the refueling water storage tank
SR 3.5.1.5	Verify power is removed from each accumulator isolation valve operator when RCS pressure is ≥ 2000 psig.	31 days

8. 006K5.05 001/2/1/EPA SOLID/C/A 3.4/3.8/NEW/FA011005/RO/CVR

Unit 2 has had a Pressurizer Safety valve stick open. A Reactor Trip and Safety Injection has occurred. The Pressurizer is solid.

Which one of the following is correct concerning the actions that ESP-1.2, Post LOCA Cooldown and Depressurization, will direct?

A. Normal Charging will be established to control subcooling. Letdown will not be placed in service.

B. Normal Charging and Letdown will be placed in service to establish a bubble and level in the pressurizer.

C. Safety Injection flow will be maintained to establish and control subcooling. Letdown will not be placed in service.

D. Safety Injection flow will be reduced by securing HHSI pumps and letdown placed in service to establish a bubble and level in the pressurizer.

A. Correct. **Normal Charging will be established to control subcooling. Letdown will not be placed in service.**
ESP-1.2 note prior to step 21.2, Maintain pressurizer level greater than 48%, states that with a steam space LOCA, charging is used to maintain subcooling instead of pressurizer level.

B. Incorrect. Letdown is not placed in service in ESP-1.2 Due to the LOCA providing a letdown path. A bubble is not established.

C. Incorrect. This would be a true statement if asked whether or not you go to ESP-1.1, SI TERMINATION from EEP-1. However, in ESP-1.2, Normal charging is established and subcooling is maintained.

D. Incorrect. Normal charging is established and subcooling is maintained prior to ever drawing a bubble.

006K5.05 Emergency Core Cooling
K5 Knowledge of the operational implications of the following concepts as they apply to ECCS: (CFR: 41.5 / 45.7)

K5.05 – Effects of pressure on a solid system

3. State the basis for all cautions, notes, and actions associated with ESP-1.2 (OPS52531F03).

STEP: Check If Charging Flow Should Be Controlled To Maintain PRZR Level

PURPOSE: To maintain PRZR level on scale by either running a low-head SI pump or by adjusting normal charging flow

BASIS:

Pressurizer level will tend to decrease when SI flow is terminated as leakage from the RCS continues. The operator is instructed to control charging flow as necessary to compensate for this leakage and coolant shrinkage so that pressurizer level is maintained on span.

ACTIONS:

- o Determine if one low-head SI pump is running in the SI mode
- o Control charging flow to maintain PRZR level

INSTRUMENTATION:

- o PRZR level indication
- o Charging flow indication
- o Low-head SI pump status indication

CONTROL/EQUIPMENT:

Charging flow controls

KNOWLEDGE:

o If the PRZR is solid, charging flow will also control RCS pressure. In that case, flow should be controlled as necessary to maintain RCS subcooling greater than instrument uncertainties.

o The RCS depressurization in Step 20 will restore PRZR level if PRZR level continues to decrease with maximum normal charging flow.

PLANT-SPECIFIC INFORMATION:

N/A

Step	Action/Expected Response	Response NOT Obtained
	NOTE: During a LOCA, a full or rising pressurizer level may indicate a steam space LOCA exists. In that event, step 21.2, RNO provides guidance if the RCS must be operated water solid, and charging used to maintain subcooling instead of pressurizer level.	
	21.2 Maintain pressurizer level greater than 15%{48%}. 21.2.1 IF charging flow path aligned, THEN control charging flow. CHG FLOW [] FK 122 adjusted	21.2 IF solid plant operation required, THEN perform the following. a) Maintain SUBCOOLED MARGIN MONITOR indication greater than 26°F{55°F}. b) Control charging flow to stabilize subcooling at existing value. CHG FLOW [] FK 122 adjusted
	NOTE: • To ensure adequate pressurizer spray, the priority for operating RCPs is 1B, 1A and then 1C. • Changes in RCP configuration may affect pressurizer spray flow.	
___	**22 Check RCP Status.**	
	22.1 Check at least one RCP - STARTED.	22.1 Proceed to Step 23.
	22.2 Stop all but one RCP.	
	22.3 Proceed to Step 24.	

___Page Completed

The stabilization of RCS temperature is very important for successful completion of the subsequent diagnostic steps. If temperature has not been stabilized, the team must factor this into their decision/diagnostic processes to ensure that misdiagnosis of the accident does not occur.

Pressurizer PORVs and Spray valves

To prevent RCS depressurization and loss of inventory, the pressurizer PORVs should be verified closed each time pressurizer pressure falls to less than 2310 psig. Caution should be exercised any time a PORV has been cycled. History has proven these valves to have a potential for sticking open after cycling and should be checked closed by valve position indication and PRT indication after each valve operation.

An open pressurizer PORV, pressurizer code safety, or spray valve may cause a rapid RCS depressurization. The operator checks that these valves are closed if pressurizer pressure is below the appropriate setpoints.

If the pressurizer pressure is below 2310 psig and any pressurizer PORV or its block valve cannot be closed or there is evidence that leakage into the PRT exists, the operator is instructed to transfer to EEP-1, Loss of Reactor or Secondary Coolant, to address a potential small break loss of coolant accident (LOCA) condition. If the pressurizer pressure is below 2230 psig and any normal pressurizer spray valve cannot be closed, the operator is instructed to stop any RCP supplying the failed spray valve in order to minimize the RCS depressurization.

RCP Criteria

RCP trip criteria have been developed and incorporated into the ERPs to provide for RCP trip when required for small break (SB) LOCAs and to minimize the probability of RCP trip when not required. The RCP trip criteria consist of two fundamental parts:

1. Successful operation of the SI system
2. Selected plant parameters reaching critical setpoints

In the ERPs, the RCPs are not tripped unless this two-part criteria is satisfied. It cannot be emphasized too strongly that a fundamental condition which must be satisfied for RCP trip during an emergency condition is that at least one high-head safety injection (HHSI) pump be in operation delivering flow to the RCS. If this fundamental condition is not met, the RCPs should not be

LHSI Status

If RHR Pumps are operated on miniflow for longer than three hours with no CCW supplied to the RHR Heat Exchangers pump damage may occur. The residual heat removal (RHR) (LHSI) pumps can only deliver flow to the RCS when RCS pressure is lower than the shutoff head of the pumps. At higher RCS pressures, the pumps inject no water and are pumping water around a small closed loop. The RHR pumps will be stopped in this no-flow condition to prevent any damage from heatup if CCW cannot be established to provide cooling. Damage could occur in approximately three hours under these conditions.

A caution alerts the team to manually restart the RHR pumps should RCS pressure drop below the shutoff head of the pumps, thus allowing injection flow capability. No signal will be generated to restart them automatically unless a loss of off-site power (LOSP) condition should subsequently occur. ERP assumptions are that injection flow will not occur until RCS pressure is less than an indicated pressure of 263 psig. 265 psig is used as the setpoint in the caution step because it would be difficult to read 263 psig due to meter scaling. The adverse containment setpoint is 430 psig.

If RCS pressure is below the shutoff head of the RHR pumps, then a large primary coolant failure exists and sufficient RHR pump cooling flow exists. To ensure sufficient RHR pump cooling in all situations, CCW flow is established to the RHR heat exchangers regardless of RCS pressure. If CCW cooling cannot be established to remove pump heat, then the pumps are secured to prevent damage and the CAUTION statement continuous action statement applied.

Differentiate Between a Steam Break and a LOCA

If a secondary system fault exists, the procedure will direct the operator to return to step 1. This is to allow a recheck of SI termination criteria. If RCS pressure is rising, it could be due to compaction of a water-solid pressurizer, which could occur during a pressurizer steam space LOCA. This note guides the operator to continue with EEP-1 if a known primary LOCA exists.

If a faulted SG is still blowing down as indicated by decreasing SG pressure, step is designed to direct the team to loop back to step 1. By looping back to step 1, the team will be allowed to continuously monitor for proper plant operation per EEP-1 while waiting for SI termination criteria to be met. As previously discussed, SI termination criteria are not expected to be met until the faulted SG is nearly empty. Once the faulted SG empties, the faulted SG pressure

will stabilize at either containment or atmospheric pressure, RCS Tavg will begin to rise, and pressurizer level will begin to increase as the RCS temperature increases.

If the faulted SG has emptied by the time this step is reached, and the faulted SG pressure has stabilized (i.e., no longer dropping in uncontrolled manner), then the team is directed to continue.

Check RCS Pressure

As previously discussed, the team should be very alert if RCS pressure is being controlled by the team. If RCS pressure would be trending up if not being controlled by the team, then the team must remember this fact. For example, assume that the team is controlling RCS pressure stable instead of allowing it to increase naturally and does not apply this fact when performing this step. The team would naturally determine that the ACTION/EXPECTED RESPONSE was met and proceed when, in reality, the team should have looped per the RNO back to step 1 for the case of a secondary fault.

With the SG empty, the reactor should begin to heat up the cold RWST water that has been injected into the RCS. The result is a rapid rise in both pressurizer pressure and level. If the team determines that either RCS pressure is trending up or would be trending up if not being controlled using pressurizer spray, then the team should loop back to step 1 to allow a recheck of SI termination criteria. If RCS pressure is determined to be stable or trending down, then a fault other than the secondary fault probably exists, and the team is directed to continue in EEP-1.

4160V Buses Energized

Plant conditions may dictate the need to load the emergency diesel generators above the continuous load rating limit (i.e., 2.85 mw for small DGs, 4.075 mw for large DGs). Under these circumstances, diesel generator loading may be raised not to exceed the 2000 hour load rating limit (i.e., 3.1 mw for small DGs, 4.353 mw for large DGs). Diesel loading should be reduced within the diesel generator continuous load rating limit as soon as plant conditions allow

Normal off-site power supply lineups should be verified for both emergency and non-emergency buses. If the off-site lineup is correct and all AC buses are energized, no further action is required per this step. Attachment of EEP-0 may be used to identify engineered safeguards feature (ESF) loads that should have been started from the sequencers.

9. 007A1.03 001/2/1/PRT/C/A 2.6/2.7/BANK/FA011005/RO/

Given the following plant conditions:

- Operating at 100% power.
- PZR PORV, PCV-444B, is leaking past its seat.
- PRT pressure increases resulting in rupture of the PRT rupture disk.

What effect will the rupture of the PRT rupture disk have on PRT temperature and leakage through the PORV?

	PRT Temp	PORV Leakage
A.	Rises	Rises
B.	Rises	Drops
C✔	Drops	Rises
D.	Drops	Drops

OPS-52101E Pressurizer

A. Incorrect - examinee may believe temperature increases are due to an increase in leakage flow rate.

B. Incorrect - examinee may believe PRT temp rises due to influx of hot fluid and if pressure rises flow through PORV would drop.

C. Correct - **Drops** **Rises**
temperature drops when PRT diaphragm ruptures which will drop PRT pressure to containment pressure. PORV leakage should increase due ΔP drop across the valve.

D. Incorrect - temperature drops when PRT diaphragm ruptures which will drop PRT pressure to containment pressure. Examinee may believe the PORV body cooling may reduce leakage.

007A1.03 Pressurizer relief tank- Ability to predict and/or monitor changes in parameters (to prevent exceeding design limits) associated with operating the PRTS controls including: Monitoring Quench tank temperature.
REFERENCES: 10CFR55.41.7/45.5

8. Predict and explain the following instrument/equipment response expected when performing Pressurizer System evolutions including the fail condition, alarms, and trip setpoints (OPS40301E08).

Evaluate abnormal plant or equipment conditions associated with the Pressurizer System
and determine the local actions needed to mitigate the consequence of the abnormality (OPS40301E12).

PZR-40301E08 #3
SQNP 2002

the remaining steam. The heat transfer capacity of the RCDT heat exchanger is sufficient to cool the contents of the PRT to 120°F within eight hours following a design relief actuation. The RCDT is returned to normal operation after completing the PRT cooldown. This is the preferred cooldown method since no liquid waste is produced as a result of the PRT cooldown.

As a backup method for cooling, cool reactor makeup water can be sprayed into the PRT via HV-8028 and 8030 and then drained to the recycle holdup tank via the RCDT pumps. Reactor makeup water is the source of water for initial fill and makeup to the PRT. This backup method will cool the PRT contents from an initial temperature of 200°F to 120°F in one hour. The valves mentioned (HV-8028 and 8030) are controlled remotely from the MCB. HV-7141 is controlled from the liquid waste processing panel. All three valves fail closed on loss-of-electrical power or -air.

The PRT is not designed to accept a continuous discharge from the Pressurizer. If the pressure in the tank exceeds 100 psig, two rupture discs relieve the PRT contents to the containment atmosphere. This creates the potential for increased containment pressure, temperature, humidity, and radiation levels. Depending on the PRT contents, the system which is relieving to the PRT, and the flow rate into the PRT, the adverse containment parameters can or will increase to an extent where significant problems with containment equipment and instrumentation could be encountered. The rupture discs have a relief capacity equal to the combined capacity of the Pressurizer code safety valves. The PRT design pressure and the rupture disc setpoints are twice the calculated pressure resulting from the maximum code safety valve discharge. This margin prevents deformation of the discs during releases less than design. The PRT and rupture disc holders also are designed for full vacuum to prevent tank collapse if the contents cool following a discharge.

The PRT is equipped with temperature, level, and pressure detectors that provide indication on the MCB and alarms for high pressure, high temperature, and high or low level.

The PRT instrumentation is utilized in the Emergency Response Procedures (ERPs) as an indication of a leaking safety valve or PORV. High temperature, level, and pressure are indicative of inleakage into the tank. If a safety or PORV is suspected of leaking by its seat, the associated valve's tail piece temperature will indicate higher than the others. If a PORV is leaking by its seat, the valves will have to be isolated using their associated block valves, usually one at a time, while monitoring the tail piece temperature and PRT parameters for evidence of

continued leakage. If a safety valve is determined to be leaking by its seat, the PRT parameters must be monitored to determine when cooldown, drain-down, and possible venting of the PRT is required.

Pressurizer Instrumentation

Instrumentation for the Pressurizer (Figure 3) is derived from eight penetrations--six for level and pressure detectors and two for temperature detectors.

Pressurizer Temperature

The two resistance temperature detectors are installed in thermowells, TE-454 in the steam space and TE-453 in the water space. The steam space detector, located near the top of the vessel, is used during startup to determine water temperature when the Pressurizer is completely filled with water. The water space detector, located at an elevation near the center of the heaters, is used during cooldown when the steam space detector response is poor due to poor heat transfer. Both detectors indicate on the MCB and have high temperature alarms (Annunciator HC5).

Pressurizer Level

There are four Pressurizer level detectors (Figure 3 and 5), all of which have separate indicators on the MCB. LT-459, 460, and 461 are calibrated for hot operation, and LT-462 is calibrated for cold operation. LT-461 and 462 share common Pressurizer instrument penetrations. LT-459 also provides level indication in the lower equipment room, LT-459Z provides level indication on the HSP.

Level detectors LT-459, -460, and -461 are ΔP cells and use a sealed reference leg and condensate pot. This construction prevents reference leg flashing and the collection of Pressurizer H_2 gas in the reference leg, both of which can cause spurious level indication. LT-462, the cold calibrated channel, does not have a sealed reference leg.

The Pressurizer level control system (Figures 6) is programmed to maintain a constant inventory of water in the RCS during all normal plant operations. As the temperature increases, the density decreases and therefore a larger volume is required in order to maintain a constant mass. Maintaining a constant mass in the Pressurizer as RCS temperature increases from no load

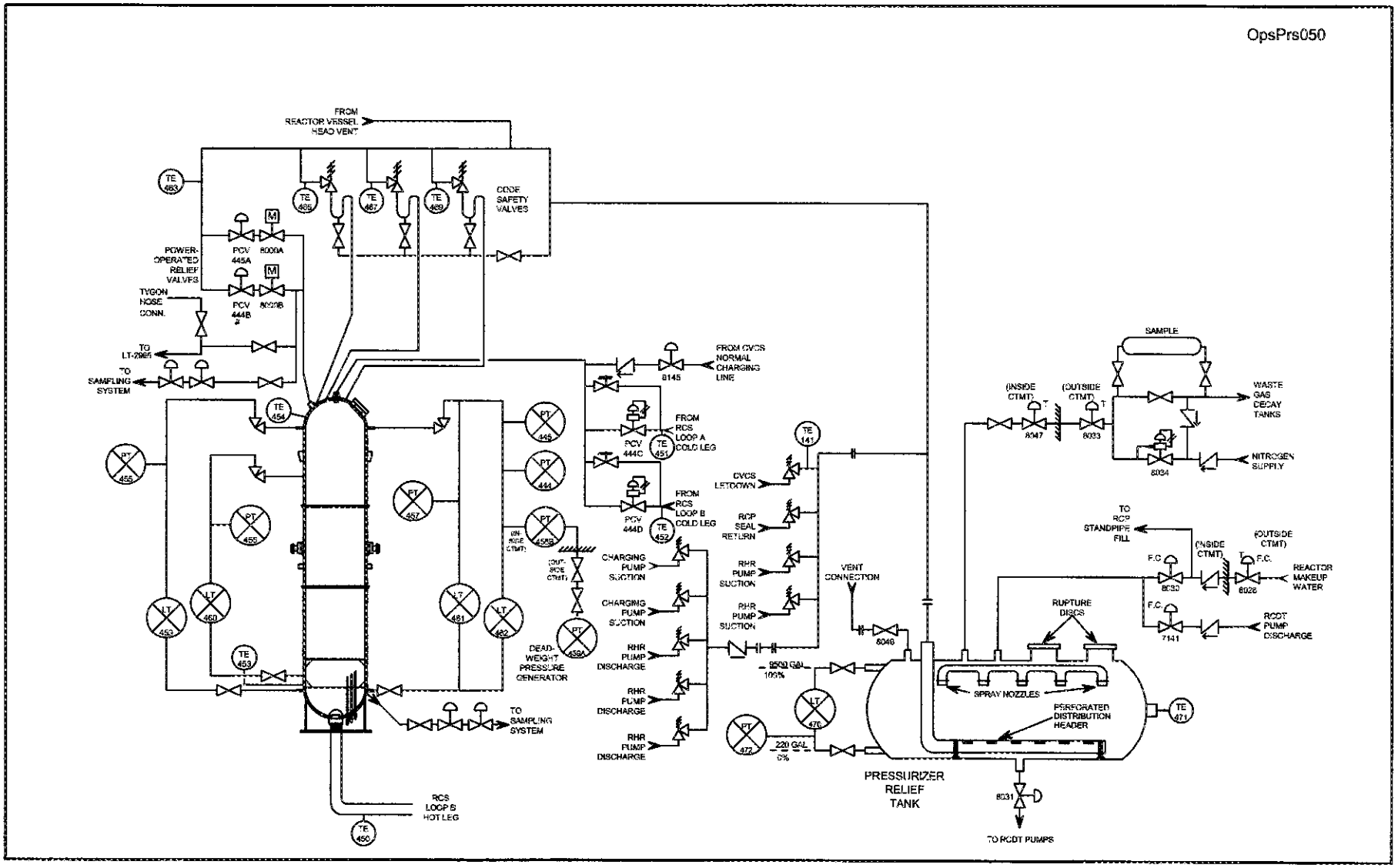

Pressurizer and Pressurizer Relief Tank

Figure 3

10. 008A4.07 001/2/1/CCW ST/MEM 2.9*/2.9/MOD/FA011005/RO/

Which one of the following describes the **normal** method for maintaining level in the CCW System Surge Tank IAW SOP-23.0, Component Cooling Water System?

Manual level control from the _____

A. Demineralized Water system by the Rover.

B. Reactor Makeup Water system by the Rover.

C. Reactor Makeup Water system from the Main Control Board.

D. Demineralized Water system from the Main Control Board.

A. Incorrect - The Rover can locally fill the surge tank by opening the MOVs. This is not procedurally correct and is not the normal method. DW is the normal source.

B. Incorrect - The Rover can locally fill the surge tank by opening the MOVs. This is not procedurally correct and is not the normal method. RMW is NOT the normal source.

C. Incorrect - Manual control can be accomplished from the MCB from RMW, but there is P&Ls and a caution in SOP-23 that RMW is the emergency source of water to the CCW ST.

D- Correct. **Manual level control from the Demineralized Water system from the Main Control Board.**
Normal makeup is from the demineralized water header through MOV-3030A and B for their respective trains. Alternate makeup comes from the reactor makeup water system through valves MOV-3031A and B. All four valves are operated from the MCB by three-position handswitches.
Reference: CFR: 41.7 / 45.5
OPS-52102G, CCW System

Makeup Valves (MOV-3030A and B and 3031A and B)

Makeup water is available to both trains from two sources--the demineralized water system and the reactor makeup water system. Normal makeup is from the demineralized water header through MOV-3030A and B for their respective trains. Alternate makeup comes from the reactor makeup water system through valves MOV-3031A and B. Reactor makeup water should only be used as an emergency source of makeup water to the CCW surge tank due to possible radioactive contamination of the system.
All four valves are operated from the MCB by three-position handswitches (CLOSE/Neutral/OPEN/spring return to Neutral). Green and red position indicating lights are provided for each valve. The makeup lines have check valves to prevent reverse flow in the event of a loss of power to the makeup system while the isolation valves are opened.

SOP-23.0 section 4.12 and 4.13.

008A4.07 Component Cooling Water - Ability to operate and/or monitor in the control room: Control of minimum level in the CCWS surge tank

Explain the purpose and operation including the design features and functions, capacities, and protective interlocks of the following major component associated with the Component Cooling Water System (OPS40204A02):
- Component Cooling Water Pumps
- Component Cooling Water Surge Tank
- Demineralized Water Fill
- Reactor Makeup Water Fill

Describe, when applicable, the Component Cooling Water System flow path to include all major components (OPS40204A05).
- Component Cooling Water Pumps
- Component Cooling Water Surge Tank
- Demineralized Water Fill
- Reactor Makeup Water Fill

modified from CCW-40204A05 #9

original [illegible]

QUESTIONS REPORT

for 008a4.07 Questions

CCW-40204A05 009/HLT//M (LEVEL 1) PROC/008A4.07////

Which of the following describes the normal method for maintaining/controlling the level in the Component Cooling Water System Surge Tank?

A. Manual control by the Plant Equipment Operator.

B. Automatic valve control set to maintain level between two setpoints.

C. Manual operation of the control switch for the fill valve on the Main Control Board.

D. Manual operation of the Demin Water transfer pumps on the Main Control Board.

C is correct. Normal makeup is from the demineralized water header through MOV-3030A and B for their respective trains. Alternate makeup comes from the reactor makeup water system through valves MOV-3031A and B. All four valves are operated from the MCB by three-position handswitches

C. Manual operation of the control switch for the fill valve on the Main Control Board.

A is wrong. The Plant Equipment Operator can locally fill the surge tank but this is not the normal method.

B is wrong. The surge tanks level is not controlled automatically.

Dis wrong. Starting a DW transfer pump will increase flow to the SW surge tank but only if the fill valve is opened manually.

Reference:
CFR: 41.7 / 45.5
OPS-52102G, CCW System

Makeup Valves (MOV-3030A and B and 3031A and B)

Makeup water is available to both trains from two sources--the demineralized water system and the reactor makeup water system. Normal makeup is from the demineralized water header through MOV-3030A and B for their respective trains. Alternate makeup comes from the reactor makeup water system through valves MOV-3031A and B. Reactor makeup water should only be used as an emergency source of makeup water to the CCW surge tank due to possible radioactive contamination of the system.

All four valves are operated from the MCB by three-position handswitches (CLOSE/Neutral/OPEN/spring return to Neutral). Green and red position indicating lights are provided for each valve. The makeup lines have check valves to prevent reverse flow in the event of a loss of power to the makeup system while the isolation valves are opened.

3.0 Precautions and Limitations

3.1 CCW is normally lined up so that one CCW pump and one CCW heat exchanger is in operation supplying the on-service train and the secondary heat exchangers. The swing pump and heat exchanger (1B CCW pump and 1B HX) is normally aligned in standby to the on-service train with the heat exchanger outlet valve shut. The remaining pump and heat exchanger is valved into a closed loop with the redundant safety train. This train is idle and is designated as the off-service train.

3.2 The off-service train CCW pump must be running before starting the off-service train charging pump or RHR pump.

3.3 CCW surge tank level must be maintained above 13 inches.

3.4 Reactor makeup water should only be used as an emergency source of makeup water to the CCW surge tank.

3.5 Do not operate more than one CCW pump through one CCW heat exchanger. Control circuitry does not allow auto start of two pumps in the same train.

3.6 CCW supply valve to SFP heat exchanger must remain open whenever CCW supply valve to RHR heat exchanger in the same train is closed.

3.7 Frequent starting may damage the component cooling water pump motors. Limit pump starts as follows:

3.7.1 Two successive starts from ambient temperature.

3.7.2 One start from rated temperature.

3.7.3 Subsequent starts: allow 30 minutes running time or 60 minutes idle time between starts.

3.8 Component cooling water flow to an idle RCP should not be isolated unless reactor coolant system temperature less than 150°F.

3.9 During normal operation component cooling heat exchanger outlet temperature should be maintained between 60°F and 105°F.

3.10 During plant cooldown component cooling water outlet temperature should not exceed 120°F.

4.10 Shifting on-service train from A Train to B Train.

4.10.1 Shift train alignment from A Train to B Train by performing Appendix FNP-1-SOP-23.0B.

4.11 Shifting on-service train from B Train to A Train.

4.11.1 Shift train alignment from B Train to A Train by performing Appendix FNP-1-SOP-23.0C.

4.12 Normal makeup to CCW surge tank.

4.12.1 Notify Shift Chemist that the CCW surge tank is to be made up to.

4.12.2 Open MKUP TO CCW FROM DW STOR TK Q1P17MOV3030A(B) (Q1P17V121A[B]) to add makeup to A(B) portion of CCW surge tank. Monitor CCW SRG TK LVL LI 3027A(B). Maintain level between 33 inches and 50 inches.

4.12.3 WHEN makeup addition is completed, THEN close MKUP TO CCW FROM DW STOR TK Q1P17MOV3030A(B) (Q1P17V121A[B]).

4.13 Emergency makeup to CCW surge tank.

CAUTION:	**Reactor makeup water should only be used as an emergency source of makeup water to the CCW surge tank.**

4.13.1 Close DEMIN WATER TO CCW SURGE TANK N1P11V045.

4.13.2 Open MKUP TO CCW FROM RMW Q1P17MOV3031A(B) (Q1P17V117A[B]) to add makeup to A(B) portion of CCW surge tank. Monitor CCW SRG TK LVL LI 3027A(B). Maintain level between 33 inches and 50 inches.

4.13.3 WHEN makeup addition is completed, THEN close MKUP TO CCW FROM RMW Q1P17MOV3031A(B) (Q1P17V117A[B]).

4.13.4 Open DEMIN WATER TO CCW SURGE TANK N1P11V045.

The CCW heat exchangers are designed for the flow from only one CCW pump. CCW heat exchanger discharge temperature and inlet flows indicate on the MCB.

Surge Tank

The seismic class I CCW surge tank is connected to the pump suction header at two places (one for each train) and accommodates cooling water expansion and contraction due to temperature changes. It also provides a water reservoir and head tank for the CCW pumps. The surge tank is not required to meet CCW design pressure because the tank is open to atmosphere and protected by relief valves. The surge tank design internal pressure is 14 psig.

The surge tank has a total volume capacity of 2000 gallons with a normal volume of 1000 gallons. It is divided into two sections by a metal partition that extends from the bottom of the tank to 30" from the tank bottom. This tank separation is to provide sufficient CCW inventory for the remaining train to perform its function in the event of leakage or a rupture occurring in any nonseismic portion of the operating train.

The surge tank is physically located above the non-rad ventilation room (Rm 506) on the 179' elevation.

The surge tank has level transmitters on each side of the partition. Alarms annunciate on the MCB on a high level, a Lo level, and a Lo-Lo level.

It is possible to make up to either side of the surge tank from 2 sources--one from the demineralized water storage tank and one from the reactor makeup water storage tank. Makeup is controlled by MOV-3030A and B and 3031A and B, which are operated from the MCB. The makeup control valves are located in room 185 on the 100' elevation of the Aux Building.

The surge tank also has a connection for adding chemicals to the CCW system. Potassium chromate is added as a corrosion inhibitor. Normally closed mixing valves are provided to ensure mixing flow with the surge tank during chemical addition. Only one chemical mixing isolation valve may be open at any time. Simultaneous opening of chemical mixing isolation valves in opposite trains will result in a loss of two independent CCW loops due to cross-connecting trains through the mixing valves.

Potassium chromate is an environmental hazard and any liquid drained from the Component Cooling Water System must be disposed of in accordance with Appendix 5 of SOP-23.0. Handling of Potassium Chromate shall be done in accordance with approved procedures.

reestablished so that post accident RCS chemistry samples can be obtained. A CCW surge tank Lo-Lo level from either train A or train B will also shut AOV-2229. A check valve on the downstream side prevents reverse flow during isolation of the sample coolers.

OPERATIONS

Instrumentation and Controls

The following instrumentation and controls associated with the CCW system are found on section A1 of the MCB.

Makeup Valves (MOV-3030A and B and 3031A and B)

Makeup water is available to both trains from two sources--the demineralized water system and the reactor makeup water system. Normal makeup is from the demineralized water header through MOV-3030A and B for their respective trains. Alternate makeup comes from the reactor makeup water system through valves MOV-3031A and B. Reactor makeup water should only be used as an emergency source of makeup water to the CCW surge tank due to possible radioactive contamination of the system.

All four valves are operated from the MCB by three-position handswitches (CLOSE/Neutral/OPEN/spring return to Neutral). Green and red position indicating lights are provided for each valve. The makeup lines have check valves to prevent reverse flow in the event of a loss of power to the makeup system while the isolation valves are opened.

CCW Pumps

The three CCW pumps (Figures 6 & 7) can be operated from the MCB or locally at the HSP by a three-position handswitch (STOP/AUTO/START, spring return to AUTO). A two-position selector switch (LOCAL/REMOTE) at the HSPs determines which station has control of the pumps. The dedicated pumps (A and C) will automatically start on receiving an "S"-signal or a loss of offsite power (LOSP) signal, provided that the local remote selector switch is in the REMOTE position and the MCB handswitch is in the AUTO position. The swing pump (B) acts as a backup for the dedicated pumps by being mechanically and electrically aligned to the same train as one or the other of the dedicated pumps. The swing pump will automatically start when: (1) the

Step	Action/Expected Response	Response NOT Obtained

****

CAUTION: To prevent pump damage the 86 lockout relay for a faulted CCW PUMP must not be reset until the cause of the fault has been determined. Placing the affected CCW PUMP handswitch to STOP will reset this relay.

****

NOTE:
- The standby CCW PUMP will automatically start if the pump in the train it is aligned to trips due to electrical overload.
- The term "on service train" refers to the train which is aligned to supply the miscellaneous header.

____ 1	**Verify CCW pump started in affected train.**	1 IF CCW cooling lost to running charging pump, THEN perform the following: 1.1 Verify CCW pump started in the non affected train. 1.2 IF CCW pump running in non affected train, THEN start charging pump in non affected train. 1.3 IF charging pump started in non affected train, THEN stop charging pump in affected train.
____ 2	**Check CCW surge tank level stable.**	2 Perform the following while continuing with step 3.0. 2.1 Maintain a level of 13 inches on CCW surge tank using SOP-23.0 sec 4.12 or 4.13. 2.2 Dispatch personnel to locate and isolate the source of leakage.

____Page Completed

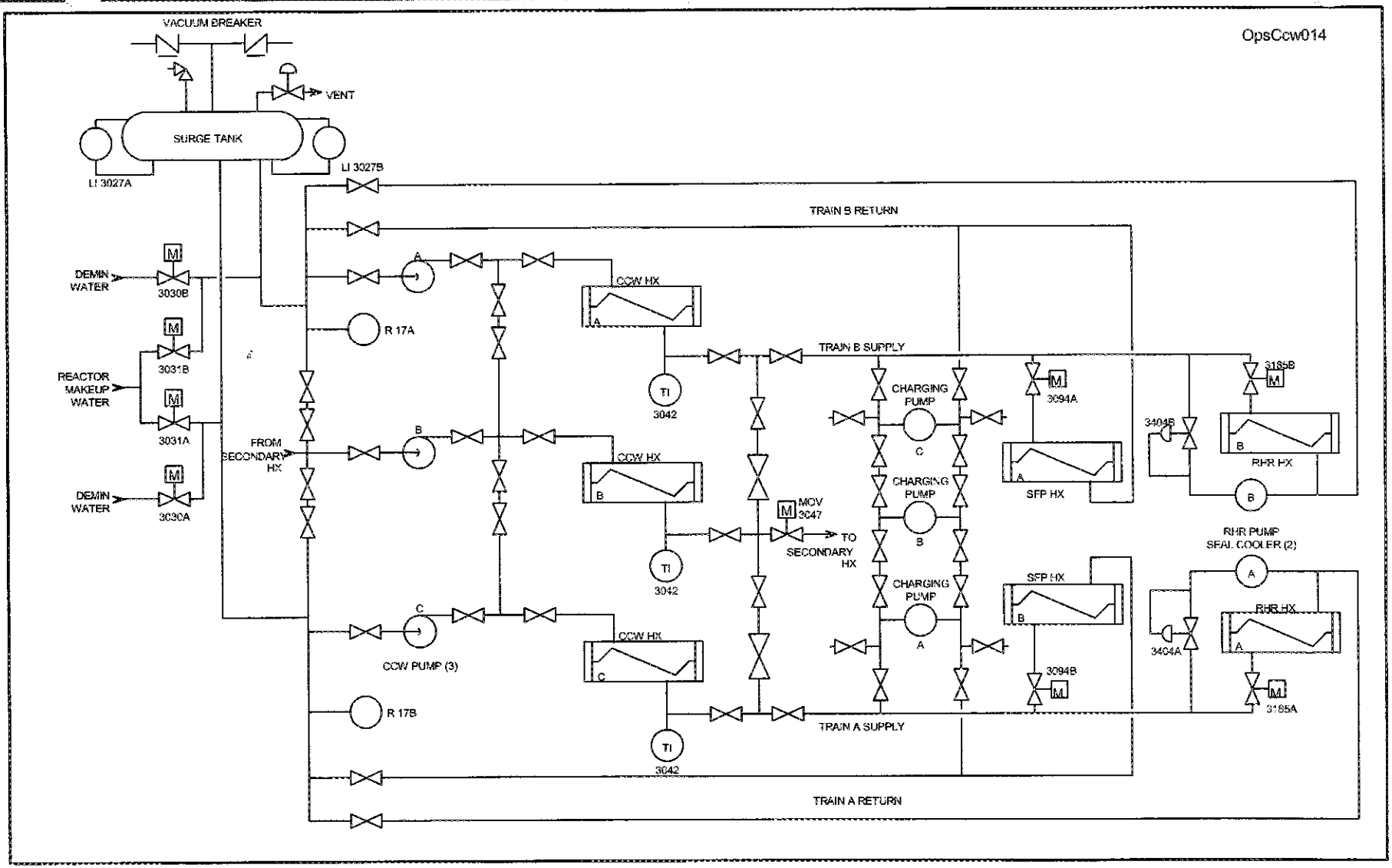

Component Cooling Water System

Figure 2

11. 008AK3.02 001/1/1/ISENTHALPY/MEM 3.6/4.1/NEW/FA011005/RO/

The following plant conditions exist:

- Pressurizer steam space temperature is 650°F.
- Pressurizer Relief Tank (PRT) pressure is 50 psia.
- The PORV is stuck partially open.

The approximate temperature downstream of the PORVs will be _____ than the Pressurizer steam space temperature since the PORV flow is a constant _____ _____.

(Fill in the blanks with the correct answers from below)

A. the same as; enthalpy process.

B. the same as; entropy process.

C. lower; enthalpy process.

D. lower; entropy process.

A. Incorrect - The temperature would not be the same as Pressurizer steam space temperature since the PORV flow is a constant enthalpy process, the downstream temperature would not be at saturation for the pressurizer. It would more closely approximate saturation temperature of the downstream PRT and be saturated, not superheated. Enthalpy is correct.

B. Incorrect- The temperature would not be the same as Pressurizer steam space temperature since the PORV flow is a constant enthalpy process, the downstream temperature would not be at saturation for the pressurizer. It would more closely approximate saturation temperature of the downstream PRT and be saturated, not superheated. Entropy is NOT correct.

C. Correct- **lower; enthalpy process.**
Using the Mollier, conditions are saturated and the temperature is 281°F. This is due to the process being a constant enthalpy process a defined in the General physics PWR thermodynamics book page 21-23

D. Incorrect- Using the Mollier, conditions are saturated and the temperature is 281°F. This is due to the process being a constant enthalpy process a defined in the General physics PWR thermodynamics book page 21-23. Entropy is NOT correct.

Reference:
CFR 41.8 / 41.10 / 45.3
AOP-1.0
OPS52520A, AOP-1.0 RCS Leakage

008AK3.02 Pressurizer Vapor space accident (Relief Valve Stuck open) - Why PORV or code safety exit temperature is below RCS or PZR temperature

Explain the condensing process using an enthalpy-entropy (h-s) diagram or temperature-entropy (T-s) diagram (OPS30901D09).

Solve throttling process problems, applying the General Energy Equation (OPS30901D10).

Explain the reduction of process pressure from throttling using an enthalpy-entropy (h-s) diagram or temperature-entropy (T-s) diagram (OPS30901D11).

Example 4-6

THROTTLING

A throttling process is one in which the fluid is made to flow through a restriction (for example, a partially opened valve, or orifice, although the concept also applies to a pipe break) causing a considerable drop in the pressure of the fluid. The main effect is a significant pressure drop without any work interactions or changes in kinetic or potential energy. This may also result in a small increase in the internal energy.

The General Energy Equation for a throttling event can be simplified by making reasonable assumptions.

1. The elevation difference is negligible, so the potential energy terms can be ignored.

2. For a typical throttling event where steady flow conditions hold, the velocity in is approximately equal to the velocity out. Therefore, the kinetic energy terms cancel.

3. Since the fluids are flowing through the valve (or crack), the fluids perform no work on the valve, and because valve does no work on the fluid, the work term can be ignored.

4. In most steady flow applications, the throttling device is insulated, so the heat transfer is insignificant.

For a typical throttling event, the General Energy Equation reduces to:

$$P_1V_1 + U_1 = P_2V_2 + U_2$$

Equation 4-37

This equation can be reduced even further by replacing the PV + U terms on both sides with enthalpy terms and then factoring out the mass. Making this substitution and rearranging will yield the following, so the General Energy

© 1999 GENERAL PHYSICS CORPORATION

Equation for a throttling process for specific energy terms can be reduced to:

$$P_1 \upsilon_1 + u_1 = P_2 \upsilon_2 + u_2$$

or

$$h_{in} = h_{out}$$

Equation 4-38

The points chosen in analyzing the process must be selected at sufficient distance from the point of throttling to ensure stable, uniform flow. The sudden expansion and pressure drop causes turbulence downstream of the flow obstruction.

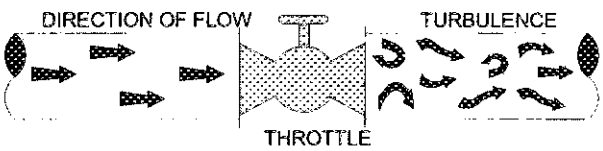

Figure 4-17 Flow Throttling

Throttling is essentially a constant enthalpy process, as shown in the h-s and T-s diagrams in Figure 4-18. Enthalpy remains constant while entropy increases. No work is done and no heat is added. The result is a pressure drop and a slight increase in velocity.

The change in specific volume (Equation 4-38) depends on the fluid being processed. Throttling is inherently irreversible with no ideal equivalent. For this reason, point 2′ is used in Figure 4-18. As the pressure decreases from P_1 to $P_{2'}$, enthalpy is constant and entropy increases. If the pressure decreases to a value found above or to the right of the saturated vapor line (point 3), then the process fluid (steam) will be in the superheated region. The value of throttling lies in the ability to provide a simple means of controlling equipment and processes. System efficiency is sacrificed to some degree to achieve simplification in the manipulation of equipment. Efficiency is lost due to an increase in entropy.

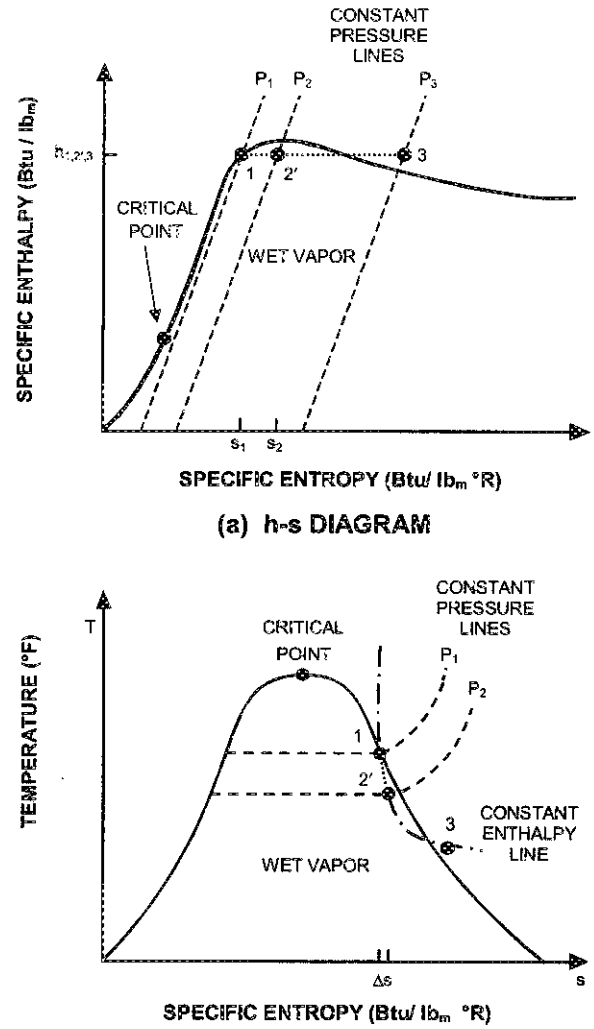

Figure 4-18 Property Diagrams of a Steam Throttling Process

A steam safety relief valve at 2250 psia is leaking a small amount. The relief tank is at 20 psia. Essentially the entire pressure drop occurs across the valve. Using a Mollier diagram, the quality of the steam exiting the valve is 66.5%.

When a throttling process is analyzed, a small opening of the valve is assumed. When the valve is nearly shut, the entire pressure drop is across the valve, and the process is considered isenthalpic. The more open the valve is, the

© 1999 GENERAL PHYSICS CORPORATION

smaller the pressure drop across the valve. A greater percentage of the pressure drop becomes a function of the head loss in the piping. Pressure reduction due to frictional head loss is not isenthalpic.

The temperature-enthalpy diagram indicates an interesting behavior of water with respect to enthalpy. The specific enthalpy of saturated water vapor increases with temperature until approximately 450°F. Above 450°F, the specific enthalpy decreases with increasing temperature up to the critical point.

This phenomenon is particularly important during rapid pressure drops occurring during plant operations. At initially high temperatures (i.e., 650°F), an isenthalpic drop to atmospheric pressure results in high quality steam at 212°F. At initially lower temperatures (i.e., 400°F), an isenthalpic drop to atmospheric pressure results in superheated steam at approximately 320°F. For example, if a relief valve in the main steam line fails partially open, steam is throttled through the valve. The steam exiting is initially at a temperature of approximately 545°F. The steam experiencing an isenthalpic pressure drop to atmospheric pressure exits the throttled valve as superheated steam at a temperature of 290°F. On the other hand, steam is throttled through a valve at a temperature of 653°F and enters the piping to the relief tank (20psia) as a saturated mixture at 230°F. Because the processes are isenthalpic, an originally higher steam temperature exits the throttle valve at a lower temperature.

A Safety Relief Valve lifts when the saturated steam pressure reaches 1,110 psia. Calculate the resultant steam temperature when pressure drops to atmospheric. Is the steam still saturated?

Example 4-7

© 1999 GENERAL PHYSICS CORPORATION

Pressurizer Code Safety Valves

The combined capacity of the three Pressurizer American Society of Mechanical Engineers (ASME) code safety valves (Figure 3) is designed to accommodate the maximum pressure insurge that could result from a complete loss-of-load. The design assumes that there is no reactor trip (until the first reactor protection trip setpoint is reached), no PORV or steam dump valve operation, and that the secondary steam side code safety valves open when their safety setpoint is reached.

The code safety valves are totally enclosed, pop-type valves with an individual capacity of 345,000 lbs/hr. They are installed with a flange connection so they may be removed for testing and inspection. Each valve is a spring-loaded, self-actuated valve, with backpressure compensation and is preset for a lifting pressure of 2485 psig.

The 6-inch pipe connecting the Pressurizer nozzles to their respective code safety valves is a loop seal. Condensate resulting from normal heat losses to the ambient accumulates in this loop. The condensate reduces any leakage of hydrogen gas or steam through the code safety valves' seats. If the Pressurizer pressure exceeds the setpoint of the code safety valves, they start lifting, and the water from the loop seal discharges during the accumulation period of the safety valve. (Accumulation is the period of time from when the valve starts to lift until the valve is fully open.) The three safety valves each relieve to a common line that is piped to the PRT. The safety valves are located at the top of the pressurizer inside the pressurizer cubicle. The safety valves are not designed to pass water and can be damaged if Pressurizer level is high enough to pass water through the valves when opened (NRC Information Notice 88-77, IN 88-77).

A resistance temperature detector (TE-465, 467, 469) in the discharge piping of each code safety valve provides indication on the MCB. When the discharge piping reaches 20°F above ambient, a high temperature alarm annunciates on the MCB (Annunciator HA4). An alarm annunciates on the MCB by the valve limit switches any time one of the code safety valves is not fully closed (Annunciator HE2). These alarms warn the operator of an actuated or leaky code safety valve. Valve position indicating lights are provided on the MCB for each code safety valve.

AOP-1.0-52520A02 013/HLT//C/A(LEVEL 2/3) PROC/APE008AK1.01//Y//

The following plant conditions exist:

- Reactor Coolant (RCS) pressure 2220 psia.
- Pressurizer ReliefTank (PRT) pressure is 50 psia.
- The PORV is stuck partially open.

What is the approximate temperature and phase of the fluid downstream of the PORV?

A. 649°F and Superheated

B. 298°F and Superheated

C. 281°F and Saturated

D. 259°F and Saturated

C is correct. Using the Mollier, conditions are saturated and the temperature is 281°F
C. 281°F and Saturated

A is wrong. This temperature is saturation for current pressurizer pressure but, since the PORV flow is a constant enthalpy process, the downstream temperature would not be at saturation for the pressurizer. It would more closely approximate saturation temperature of the downstream PRT and be saturated, not superheated.

B is wrong. Downstream conditions should be saturated, not superheated. This temperature can be obtained if the student adds 15 psi to the stem value of PRT pressure (50 psia).

D is wrong. Downstream conditions should be saturated, not superheated. This temperature can be obtained if the student subtracts 15 psi from the stem value of PRT pressure (50 psia).

Reference:
CFR 41.8 / 41.10 / 45.3
AOP-1.0
OPS52520A, AOP-1.0 RCS Leakage

12. 008K2.02 001/2/1/CCW PWR/MEM 3.0*/3.0*/BANK/FA011005/RO/

Unit 1 is at 100% power and all electrical buses are aligned to their normal power source, Component Cooling Water (CCW) Pump 1A is powered from which one of the following?

A. 4160V Bus 1F via S/U Transformer 1A.

B. 4160V Bus 1F via S/U Transformer 1B.

C. 4160V Bus 1G via S/U Transformer 1A.

D. 4160V Bus 1G via S/U Transformer 1B.

A. Incorrect - 1A S/U is the correct power source to 1F, but this is an A train power bus.

B. Incorrect - 1F 4160v bus is an A train power bus and is normally supplied by 1A SU xfrmer.

C. Incorrect - 1A S/U is the alternate power source for this bus.

D. Correct - **4160V Bus 1G via S/U Transformer 1B.**
This a B Train pump and is powered from 1G 4160 V bus which is normally supplied from the 1 B SU xfrmer.

Pump A is powered from 4160 bus G; pump B is powered from 4160 bus F or G; and pump C is powered from 4160 bus F. To ensure that both power supplies are never simultaneously connected to the swing pump, a key-interlock is used. The swing pump is mechanically aligned to the same train that it is connected to electrically. The pumps are normally controlled from the MCB or may be controlled from the hot shutdown panel (HSP).

LOAD	SUPPLY	SU X-FORM Normal/Alt	EDG Supply
CCW Pump A	4160V bus G	B / A	1B/2B D/G or 2C
CCW Pump B	4160V bus F or G	A or B	According to Train L/U
CCW Pump C	4160V bus F	A / B	1-2A or 1C

008K2.02 Component Cooling Water -Knowledge of the bus power supplies to the following: CCW pump, including emergency backup.

Identify the power supply for each major electrical component associated with the Component Cooling Water System including (OPS40204A04):
• Component Cooling Water Pumps

CCW-40204A04 #1

pressure and temperature for the pumps is 150 psig and 200°F. The pumps are driven by a 400-hp induction motor. The CCW system must provide a minimum of 6,555 gpm for the on-service train to the essential and nonessential users previously listed. Each pump is provided with a discharge check valve to prevent reverse flow through an idle pump in the on-service train.

Pump A is powered from 4160 bus G; pump B is powered from 4160 bus F or G; and pump C is powered from 4160 bus F. To ensure that both power supplies are never simultaneously connected to the swing pump, a key-interlock is used. The swing pump is mechanically aligned to the same train that it is connected to electrically. The pumps are normally controlled from the MCB or may be controlled from the hot shutdown panel (HSP).

Each pump takes a suction on a common suction line; the suction line has manual isolation valves which are used for train separation. In addition, each pump discharges into a common discharge line; the discharge line also has manual isolation valves which are used for train separation. The discharge line provides the inlet for the CCW heat exchangers. The miniflow line with manual isolation provides a minimum flow of 1,000 gpm back to the pump suction header.

When a CCW pump is started, the pump room coolers automatically start to maintain a room temperature below 104°F, which is design temperature to prevent degradation of motor windings. Analysis states that the maximum temperature in the CCW pump room without a room cooler during a DBA is 145°F with one train of service water. This is less than the maximum allowable temperature of 149°F. Therefore, the pump room coolers are not needed for the Design Basis Accident (DBA).

CCW Heat Exchangers

Three seismic class I heat exchangers receive their flow from the common CCW pump discharge line. These heat exchangers are designed to maintain CCW temperature at a maximum of 105° to essential and nonessential users during normal operation and less than 135°F to essential user (ESF loads) during post LOCA recirculation.

The CCW heat exchangers are cooled by service water. CCW flows through the shell side, and service water flows through the tube side. Manually controlling the service water flow through the heat exchangers regulates the outlet temperature of the CCW. The inlet service water design temperature is 95°F, and the outlet temperature is 104.1°F, with a minimum of 10,000 gpm during all operating modes and design basis accidents.

TABLE 5
POWER SUPPLIES

LOAD	SUPPLY	S/U X-FORM Normal/Alt	EDG Supply
CCW Pump A	4160V bus G	B/A	1B/2B D/G or 2C
CCW Pump B	4160V bus F or G	A or B	According to Train L/U
CCW Pump C	4160V bus F	A/B	1-2A or 1C
MOV-3030A	MCC-U		
MOV-3030B	MCC-V		
MOV-3030A	MCC-U		
MOV-3031B	MCC-V		
MOV-3047	MCC-V		
MOV-3094A	MCC-V		
MOV-3094B	MCC-U		
MOV-3052	MCC-U		
MOV-3046	MCC-V		
MOV-3182	MCC-U		
MOV-3185A	MCC-U		
MOV-3185B	MCC-V		

13. 009EA1.02 001/1/1/SBLOCA/C/A 3.8/3.8/NEW/FA011005/RO/

Unit 1 is at 100% power when PG3, CTMT SUMP LVL HI-HI OR TRBL, annunciator comes into alarm. AOP-1.0, RCS Leakage, is entered and STP-70, Containment Sump Surveillance, is performed. LI-3282A and B, CTMT SUMP LVL, shows a level rise from 1 foot to 2 feet in 30 seconds. Which one of the following describes the relative size of the leak and actions required?

A. The leak is approximately 50 gpm; Secure letdown and maintain PRZR level on program.

B. The leak is approximately 100 gpm; Secure letdown and maintain PRZR level on program.

C. The leak is approximately 150 gpm; Trip the reactor and SI.

D. The leak is approximately 300 gpm; Trip the reactor and SI.

A. Incorrect - This is the wrong number and not completely the corect answer for 50 gpm leak.

B. Incorrect - This is the wrong number and the correct actions for a leak this size.

C. Incorrect- This is the wrong number and the wrong actions to take for a leak of 150 gpm. Rollover to the RWST with letdown secured is the correct actions. This would be correct for the same level rise over 1 minute vice 30secs.

D. Correct- **The leak is approximately 300 gpm; Trip the reactor and SI.**
In STP 70 the leak rate is determined. Approx. 13 gal/in (actual is 12.47 gal/in) equates to 13 gal/in X $\frac{12''}{30\text{ sec}}$ X $\frac{60\text{ sec}}{1\text{ min}}$ = 312 gpm using 12.47 = 299 gpm

These are the correct actions to take for a leak this size.

009EA1.02 - Small Break LOCA - Ability to operate and monitor the following as they apply to a small break LOCA: RB sump level

Analyze plant indications to determine the successful completion of any step in AOP-1.0. (OPS52520A07)

Step	Action/Expected Response	Response NOT Obtained
	NOTE: • Charging flow is limited to approximately 120 gpm when FK 122 is operated in automatic. • The intent of step 1 is to ensure that SI is actuated if PRZR level cannot be restored, and maintained stable at the normal program value. A stable pressurizer level permits a controlled orderly shutdown and cooldown to cold shutdown.	
___ 1	**Maintain pressurizer level stable at normal programmed value.** [] Control charging flow OR [] Reduce letdown flow. OR [] IF required to maintain PRZR level, THEN isolate letdown.	1 Perform the following. 1.1 Verify reactor tripped. 1.2 IF reactor tripped, THEN actuate SI. 1.3 Go to FNP-1-EEP-0, REACTOR TRIP OR SAFETY INJECTION.
___ 2	**Maintain VCT level greater than 20%.** 2.1 Verify reactor makeup system - IN AUTOMATIC. OR 2.2 Control reactor makeup system in manual using FNP-1-SOP-2.3, CHEMICAL AND VOLUME CONTROL SYSTEM REACTOR MAKEUP CONTROL SYSTEM.	2 Perform the following. a) Verify charging pump suction aligned to RWST. RWST TO CHG PUMP [] Q1E21LCV115B open [] Q1E21LCV115D open VCT OUTLET ISO [] Q1E21LCV115C closed [] Q1E21LCV115E closed b) Begin unit shutdown using FNP-1-UOP-3.1, POWER OPERATION and FNP-1-UOP-2.1, SHUTDOWN OF UNIT FROM MINIMUM LOAD TO HOT STANDBY.

___ **Page Completed**

Step	Action/Expected Response	Response NOT Obtained
7.2	Check containment radiation - NORMAL. [] R-2 CTMT 155 ft [] R-7 SEAL TABLE [] R-11 CTMT PATICULATE [] R-12 CTMT GAS	7.2 Perform the following. 7.2.1 Consult Operations On Shift Superintendent to evaluate requirement for containment entry. 7.2.2 Evaluate placing CTMT sump pump handswitches in PULL-TO-LOCK to prevent overfilling the WHT. 7.2.3 Verify containment ventilation isolation. 7.2.3.1 Stop MINI PURGE SUPP/EXH FAN. 7.2.3.2 Verify containment mini purge dampers - CLOSED. CTMT PURGE DMPRS MINI-2866C & 2867C FULL-3198A & 3198D [] 2866C [] 2867C CTMT PURGE DMPRS MINI-2866D & 2867D FULL-3196 & 3197 BOTH-3198B & 3198C [] 2866D [] 2867D

Step 7 continued on next page.

____Page Completed

FNP 1-AOP-1.0	RCS LEAKAGE	Revision 13

Step	Action/Expected Response	Response NOT Obtained
7.6	Check PRT conditions normal.	
7.6.1	Check PRT pressure - LESS THAN 5 psig.	7.6.1 Perform annunciator HE5, PRT PRESS HI, annunciator response procedure in conjunction with this procedure.
7.6.2	Check PRT level - LESS THAN 78%.	7.6.2 Perform annunciator HE4, PRT LVL HI-LO, annunciator response procedure in conjunction with this procedure.
7.6.3	Check PRT temperature _ LESS THAN 120°F.	7.6.3 Perform annunciator HE3, PRT TEMP HI, annunciator response procedure in conjunction with this procedure.
7.7	Check VCT HI LVL DIVERT VLV Q1E21LCV115A - IN VCT POSITION.	7.7 Place VCT HI LVL DIVERT VLV Q1E21LCV115A in VCT position
7.8	Check auxiliary building room sumps - HI LVL ALARMS CLEAR AND NO SUMP PUMPS RUNNING IN AUTO.	
7.9	Check containment sump level - NOT RISING EXCESSIVELY USING FNP-1-STP-70.0, CONTAINMENT SUMP SURVEILLANCE.	7.9 Consult Operations On Shift Superintendent to evaluate requirement for containment entry.
7.10	Dispatch personnel to visually inspect accessible portions of charging, letdown, BTRS and seal injection systems using ATTACHMENT 3, LEAK INSPECTION - 121' Elevation and Above and ATTACHMENT 4, LEAK INSPECTION - 100' Elevation and Below.	

Step 7 continued on next page.

___Page Completed

APPENDIX B
WORK SHEET

		A TRAIN	B TRAIN
1.	INITIAL SUMP LEVEL	_____ IN.	_____ IN.
2.	FINAL SUMP LEVEL	_____ IN.	_____ IN.

NOTE: IF ITEM 1 (INITIAL SUMP LEVEL) IS > ITEM 2 (FINAL SUMP LEVEL), THEN CHANGE IN SUMP LEVEL (ITEM 3) WILL BE NEGATIVE.

3.	ITEM 2 - ITEM 1	_____ IN.	_____ IN.
4.	AVERAGE CHANGE		

NOTE: IF ONE TRAIN OF LEVEL INDICATION OUT OF SERVICE, THEN USE THE OPERATIONAL TRAIN AS THE AVERAGE.

$$\frac{\text{\_\_\_\_\_ IN.} + \text{\_\_\_\_\_ IN.}}{2} = \text{\_\_\_\_\_ IN.}$$

5. CHANGE IN WATER VOLUME = ITEM 4 x 12.47 GAL/IN.
_____IN. x 12.47 GAL/IN = _____GAL.

6. PUMP A RUN TIME X 75 GPM = GAL PUMPED OUT.
_____ MIN x 75 GPM = _____ GAL.

7. PUMP B RUN TIME X 75 GPM = GAL. PUMPED OUT.
_____ MIN x 75 GPM = _____ GAL.

8. LEAK RATE = $\frac{\text{ITEM 5 + ITEM 6 + ITEM 7}}{\text{OBSERVED TIME - MIN.}}$

$$\left[\frac{\text{\_\_\_\_\_ GAL.} + \text{\_\_\_\_\_ GAL.} + \text{\_\_\_\_\_ GAL.}}{(\qquad)\ \text{MIN}}\right] = \text{\_\_\_\_\_ GPM}$$

Sump Size:	4' x 5' x 3' Deep
Sump Capacity:	448.8 Gal.
Hi Level Alarm:	299.2 Gal or 24" above Bottom
2nd Pump ON	299.2 Gal or 24" above Bottom
1st Pump ON	286.8 Gal or 23" above Bottom
Both Pumps OFF	124.7 Gal or 10" above Bottom
Pump Capacity	75 GPM per pump

LOCATION PG3

SETPOINT: 24.0 inches

ORIGIN: LT-3282A & LT-3282B

G3	
	CTMT SUMP LVL HI-HI OR TRBL

PROBABLE CAUSE

1. A major leak from any of the following items.
   a. containment cooler condensate drains
   b. reactor coolant pump equipment drains
   c. steam generator shell side equipment drains
2. Excessive Leakage from various floor drains.
3. Breakers FD-C2 and FD-D2 for sump pumps 19A and 19B respectively, are open.
4. Loss of power to sump pump level control from DC Distribution Panel 1H.

AUTOMATIC ACTION

The idle sump pump starts.

IMMEDIATE ACTION

1. VERIFY THAT HIGH LEVEL EXISTS BY MONITORING THE TWO CTMT SUMP LEVEL INDICATION ON THE BOP.
2. DETERMINE THE CAUSE FOR THE EXCESS LEVEL.
3. VERIFY THAT BOTH SUMP PUMPS 19A AND 19B ARE RUNNING.

SUPPLEMENTARY ACTION

NOTE: IF CTMT sump level is high due to a LOCA or steam break, THEN place both CTMT sump pumps in PULL-TO-LOCK.

1. IF the pump breakers are open, THEN close them and verify that both sump pump 19A and 19B are running.

NOTE: IF the pump breakers are closed AND the sump pumps still fail to start, THEN verify that power is available to the sump pump level control circuit from DC Distribution Panel 1H.

2. Once the source of the leakage has been determined, isolate the leak.
3. At the earliest possible convenience, repair the leak and restore the affected equipment drain path to a normal lineup.

References: D-175004; D-177393, Sh. 2

14. 010K4.02 001/2/1/PZR HTRS/C/A 3.0/3.4/BANK/FA011005/RO/

Given the following:

- Unit 2 is at 100% power.
- All pressurizer backup heaters are in AUTO.
- Variable pressurizer heaters are in the ON position
- PK-444A, Pressurizer pressure master controller is in AUTO and is functioning properly.

Due to a pressurizer level control malfunction, pressurizer level dropped to 5% and pressurizer pressure dropped to 1965 psig.

Pressurizer level was then restored to 18% and pressurizer pressure was returned to 2200 psig. Which one of the following describes the current state of the heaters assuming **no operator action**?

A. Variable and backup heaters are off.

B. Variable and backup heaters came on automatically.

C. Variable heaters came on automatically; backup heaters are off.

D. Backup heaters came on automatically; variable heaters are off.

A. Incorrect - The variable heaters will remain off, backups will come on due to being in the auto position after Pzr level returns above 15% and pressure is at 2200 #.

B. Incorrect - The variable heaters will remain off.

C. Incorrect - This is backwards of what will happen.

D. Correct - **Backup heaters came on automatically; variable heaters are off.**

OPS-52201H PZR pressure and level control lesson plan figures 13 and 10.
Due to Pzr level dropping to less than 15%, all the heaters will turn off. When the level is returned to > 15%, the Backup heaters that are in ON or AUTO position, which in this case is all of them, will turn on due to RCS pressure being below the auto on setpoint of backup heaters (<2210 psig htrs come on, >2215 psig htrs go off). The Variable heaters will stay off until placed in ON by the operator.

010K4.02 Knowledge of the PZR PCS design feature(s) and/or interlocks which provide for the following:
Prevention of uncovering PZR heaters.

Explain the purpose and operation including the design features and functions, capacities, and protective interlocks of the following major components associated with the Pressurizer Pressure and Level Control System (OPS52201H02):
- Pressurizer Heat
- Master Pressure Controller

Discuss the operation and alignment of each major component including precautions and limitations of operation, and applicable procedures, associated with the Pressurizer Pressure and Level Control System including (OPS52201H11):
- Pressurizer Heaters
- Pressurizer Spray Valves
- Pressurizer Pressure Detectors

PZR PRS/LVL-52201H07 #17

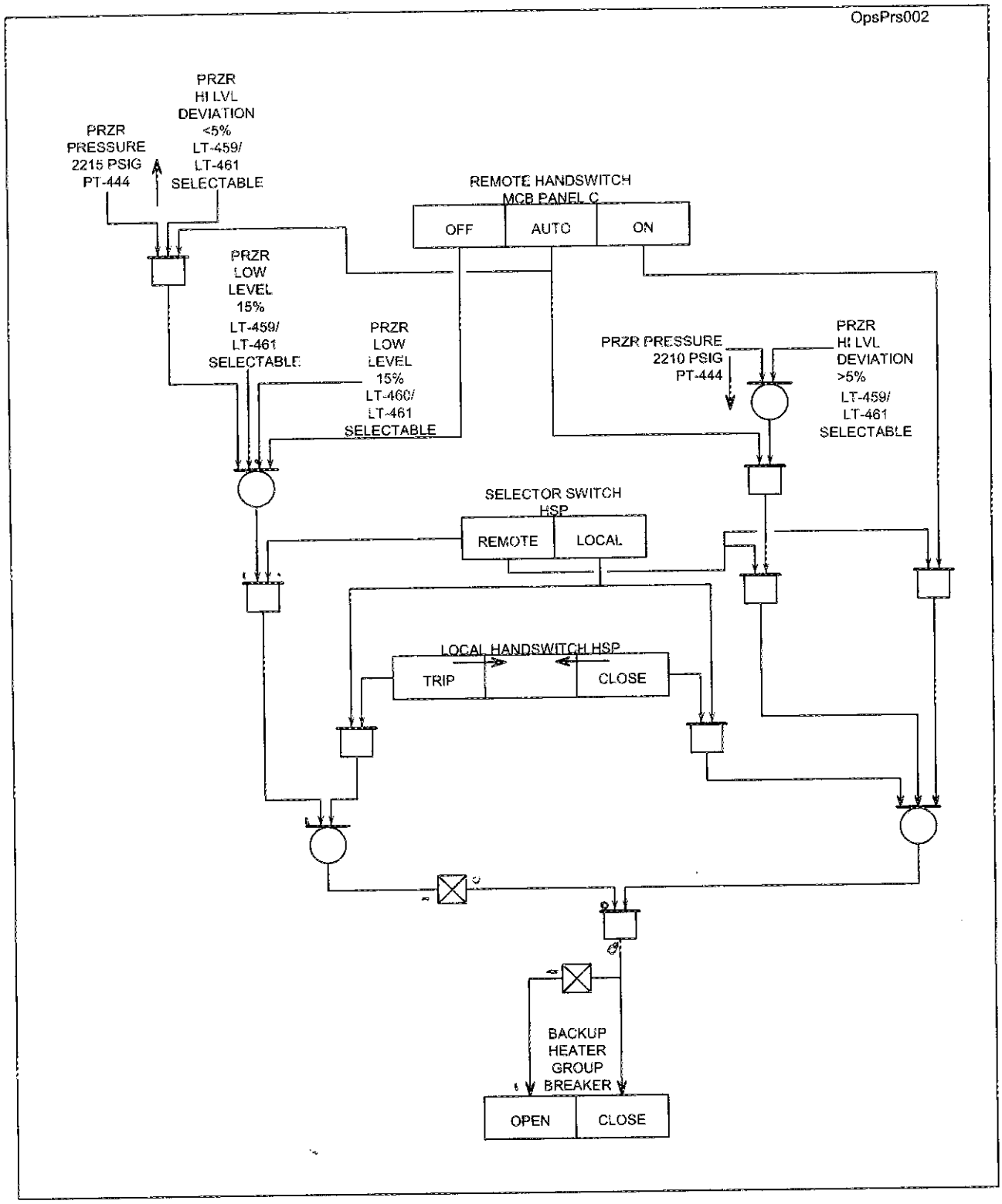

Pressurizer Heater Back-up
Group B Logic

Figure 10

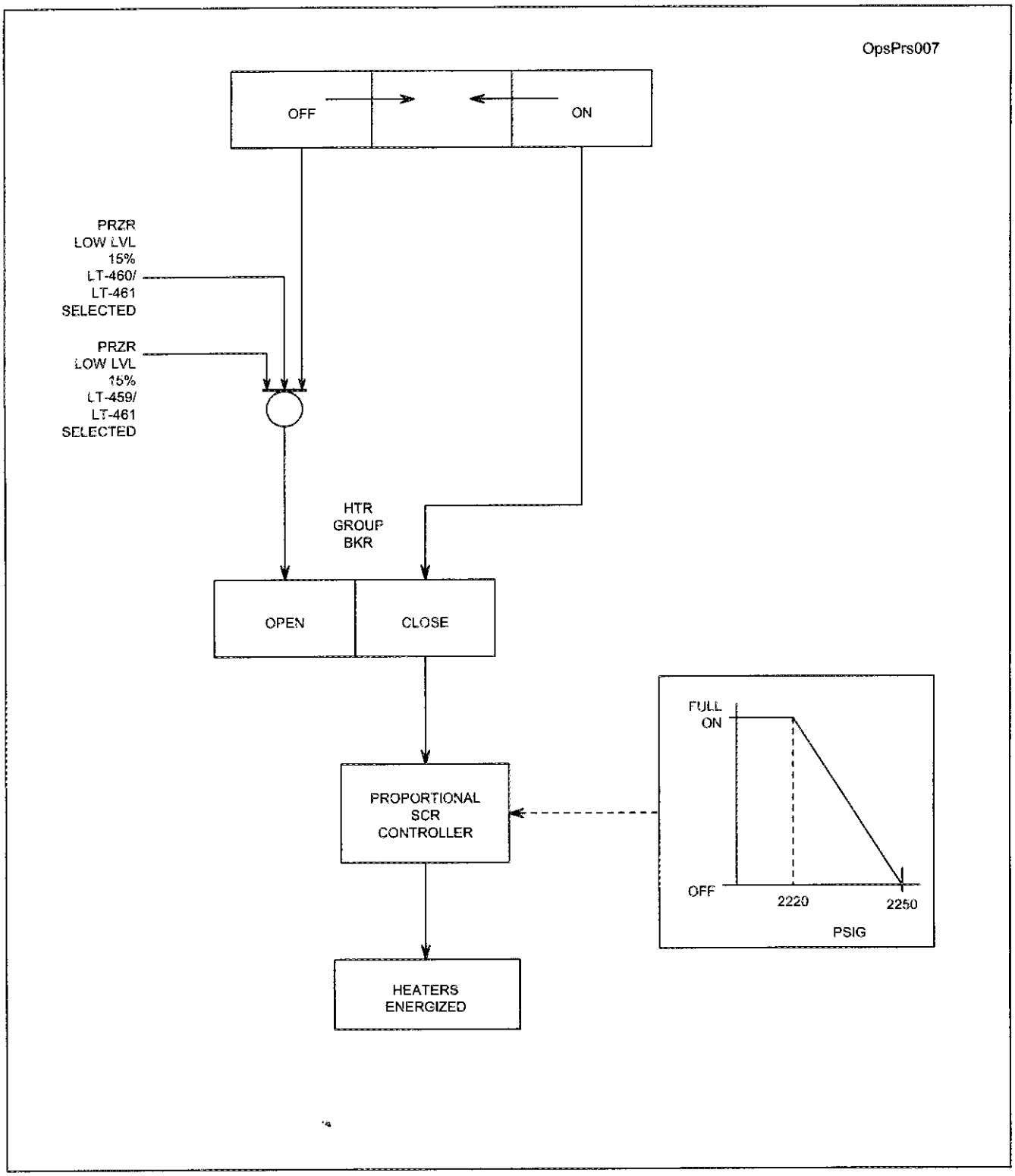

Pressurizer Proportional Heater
Group C Logic

Figure 13

above the switch. MOV 8000A is powered from 600V MCC U and MOV 8000B is powered from 600V MCC V.

Pressurizer Heater Back-up Groups A and B

Each heater group (Figures 10 and 11) has a separate, three-position switch (OFF/AUTO/ON). The A heater group also has a two-position, key-operated switch (BLOCK/BYPASS) associated with it. The BLOCK/BYPASS switch is normally in the BLOCK position when off-site power is available.

When in AUTO and off-site power is available, each heater group will turn on for a low pressurizer pressure or a high level deviation. When these conditions clear, the heaters will de-energize. A lo-lo pressurizer level will always turn off the heaters when in remote control.

In the event of an LOSP, the BLOCK/BYPASS switch must be placed in the BYPASS position to allow operation of the A heater group.

Each heater group has a LOCAL/REMOTE switch at the HSPs. When in local control, there are no automatic controls or interlocks.

Pressurizer Heater Back-up Groups D and E

These heaters (Figure 12) operate identically to Group A and B when in REMOTE.

Pressurizer Heater Variable Group C

The heater group (Figure 13) is controlled by a two-position handswitch (OFF/ON). In the ON position and its circuit breaker closed, this heater group automatically responds to varying power demand from the pressurizer pressure control circuits. This heater group also has breaker position indication lights and an amber trip light located above the switch.

Pressurizer Level Recorder Input (LS-459Y)

This switch selects the pressurizer level channel which is recorded by the red pen of recorder (LR-459). This switch is a three-position handswitch (I/II/III). In position I, pressurizer level channel (459) feeds the recorder (position II is 460; III is 461).

15. 011EK2.02 001/1/1/LBLOCA/C/A 2.6*/2.7*/MOD/FA011005/RO/CVR

Unit 1 has experienced a Large Break LOCA.

- EEP-0, Reactor trip or Safety Injection, is in progress.
- SI actuation did not occur and the operators have manually initiated a Safety Injection.
- At the step to start HHSI pumps, the operators cannot start any HHSI pumps.
- 1A, 1B and 1C RCPs are running.
- Containment pressure is 27.5 psig and rising.
- The STA reports that RCS subcooling has decreased to 0°F.

Which one of the following describes the correct operator response to this situation?

A. Trip all running RCPs and remain in EEP-0.

B. Do not trip the running RCPs and remain in EEP-0.

C. Transition to FRP-C.1, Response to Inadequate Core Cooling.

D. Transition to FRP-C.2, Response to Degraded Core Cooling.

Ref: EEP-0

A. Correct; **Trip all running RCPs and remain in EEP-0.**
EEP-0 fold out page RCP trip criteria has not been met due to failure of the HHSI pumps; however, with >27 psig in containment phase B actuates and isolates CCW to the RCPs. RCPs are not run without support conditions unless the core cooling is degraded to the point of entering FRP-C.1 at >1200°F CETC.

B - Incorrect; Even though RCP's are not tripped by fold out page criteria, and transition criteria to other procedures have not been met; CTMT Pressure peaked at >27 psig. A Phase B did occur and CCW is NOT cooling the RCPs.RCPs are not run without support conditions unless the core cooling is degraded to the point of entering FRP-C.1 at >1200°F CETC.

C. Incorrect. CSFs are not monitored this early in EEP-0, AND transition to FRP-C.1 is made if CETC's are > 1200°F, this can not be the case if subcooling has just decreased to 0°F with a LOCA in progress.

D. Incorrect. CSFs are not monitored this early in EEP-0, AND transition to FRP-C.2 is made if CETC's are > 700°F, this can not be the case if subcooling has just decreased to 0°F with a LOCA in progress.

EPE: 011 Large Break LOCA
EK2 Knowledge of the interrelations between the [there is apparentiy a typo here in the k/a document. This is as written except inside these brackets] and the following Large Break LOCA: (CFR 41.7 / 45.7) EK2.02 Pumps 2.6*

Evaluate plant conditions to determine if any system components need to be operated while performing EEP-0/ESP-0.0. (OPS52530A06)

modified from E-0/ESP-0.0-52530A06

Original Question

E-0/ESP-0.0-52530A06 002/HLT/LOCT/RO/C/A (LEVEL 2/3) PROC/EPE011EA1.03///LOCT/

Unit 1 has experienced a reactor trip. The crew had transitioned to ESP-0.1, Reactor Trip Response, when a large break LOCA occurred.

- SI actuation did not occur and the operators are unable to start any HHSI pumps.
- RCPs are running.
- A loss of containment integrity caused containment pressure to peak at 10 psig.
- The crew is verifying each train of CCW started per step 6 of EEP-0.0, Reactor trip or Safety Injection when the STA reports that RCS subcooling has decreased to 0°F.

Which ONE of the following describes the correct operator response to this situation?

A. Trip all running RCPs and remain in EEP-0.

B. Do not trip the running RCPs and remain in EEP-0.

C. Transition to FRP-C.1, "Response to Inadequate Core Cooling".

D. Transition to FRP-C.2, "Response to Degraded Core Cooling".

Ref: EEP-0

A - Incorrect; EEP-0 fold out page RCP trip criteria has not been met due to failure of the HHSI pumps

B - Correct; RCP's are not tripped by fold out page criteria. Transition criteria to other procedures have not been met. Since CTMT Pressure peaked at 10 psig (vice >27 psig), a Phase B did not occur and CCW is still lined up to the RCPs.

C - Incorrect; Transition to FRP-C.1 is made if CETC's are > 1200 °F, this can not be the case if subcooling has just decreased to 0 °F with a LOCA in progress.

D - Incorrect; Transition to FRP-C.2 is made if CETC's are > 700 °F, this can not be the case if subcooling has just decreased to 0 °F with a LOCA in progress.

2003 nrc exam

Step	Action/Expected Response	Response NOT Obtained
1	**Monitor RCP criteria.**	
1.1	Greater than 16°F(45°F) subcooled in CETC mode.	1.1 IF BHSI flow greater than 0 gpm, THEN stop all RCPs.
2	**Monitor CSF red path criteria when directed.**	
2.1	Nuclear power less than 5%.	2.1 Go to FNP-1-FRP-S.1.
2.2	Core exit T/Cs less than 1200°F.	2.2 Go to FNP-1-FRP-C.1.
2.3	Total AFW flow greater than 395 gpm or at least one SG narrow range level greater than 31%(48%).	2.3 Go to FNP-1-FRP-H.1.
2.4	RCS cold leg temperature greater than 250°F or cooldown rate less than 100°F in last 60 minutes.	2.4 Go to FNP-1-FRP-P.1.
2.5	CTMT pressure less than 54 psig.	2.5 Go to FNP-1-FRP-Z.1.
3	**Monitor switchover criteria.**	
3.1	CST level greater than 5.3 ft.	3.1 Align AFW pumps suction to SW using FNP-1-SOP-22.0.
4	**Monitor charging miniflow criteria (during SI).**	
4.1	RCS pressure less than 1900 psig.	4.1 Verify miniflow valves open.
4.2	RCS pressure greater than 1300 psig.	4.2 Verify miniflow valves closed.
5	**Monitor adverse containment criteria.**	
5.1	CTMT pressure less than 4 psig and radiation less than 10^5 R/hr.	5.1 Utilize bracketed adverse CTMT condition numbers.

Step	Action/Expected Response	Response NOT Obtained
	NOTE: Step 15 is a continuing action step until directed to monitor critical safety function status trees.	
15	**Check containment pressure - HAS REMAINED LESS THAN 27 psig.** CTMT PRESS [] PR 950	15 Perform the following. 15.1 Verify PHASE B CTMT ISO - ACTUATED. [] MLB-3 1-1 lit [] MLB-3 6-1 lit 15.2 Stop all RCPs. RCP [] 1A [] 1B [] 1C 15.3 Verify PHASE B CTMT ISO alignment. 15.3.1 Check All MLB-3 lights lit. 15.3.2 <u>IF</u> any MLB-3 light <u>NOT</u> lit, <u>THEN</u> verify PHASE B CTMT ISO using ATTACHMENT 1.

Step 15 continued on next page.

___Page Completed

16. 012K6.02 001/2/1/RPS/C/A 2.9/3.1/BANK/FA011005/RO/

Given the following plant conditions:

- Unit 1 is operating at 90% power.
- STP-33.0B, Solid State Protection System Train B Operability Test, is in progress.
- ED4, SSPS B TRN TRBL, is in alarm.
- Reactor Trip Breakers "A" & "B" are closed.
- Bypass Breaker "B" is racked in and closed.
- Bypass Breaker "A" is racked in and open.
- "B" Train SSPS Input Error Inhibit Switch is in INHIBIT.

Which one of the following describes the response of the Reactor Trip and Bypass Breakers if there is a loss of one "A" Train 48 volt power supply **with no operator action**?

A. Reactor Trip Breakers "A" & "B" open, Bypass Breaker "B" opens.

B. Reactor Trip Breaker "B" opens and "A" remains closed, Bypass Breaker "B" opens.

C✔ Reactor Trip Breaker "A" opens and "B" remains closed, Bypass Breaker "B" opens.

D. Reactor Trip Breaker "A" opens and "B" remains closed, Bypass Breaker "B" remains closed.

OPS-52201I

A. Incorrect - RTB "B" does not open since the "B" train signal is inhibited. Examinee may believe both trains receive a trip signal from either train. Also may incorrectly assume that when power is interrupted to the CRDMs, a rate trip will open B RTB. This is true only if the B Train SSPS Input error Inhibit SW. is not in INHIBIT.

B. Incorrect - RTB "B" does not open. Examinee may believe the RTBs and associated bypass breakers receive cross trained signals.

C. Correct - **Reactor Trip Breaker "A" opens and "B" remains closed, Bypass Breaker "B" opens.**
RTB "A" opens as it normally would, "B" train bypass breaker receives an "A" train trip signal.

D. Incorrect - RTB "A" opens however the examinee may believe that neither the "B" train RTB or bypass will open with "B" train signal inhibited. The bypass receives an "A" train signal.

Rx Protection lesson plan

The bypass breakers allow rod drive power to be shunted (diverted) around an open trip breaker for testing purposes. Bypass breaker BYB shunts RTB and is controlled by train A. Bypass breaker BYA shunts RTA, and is controlled by train B. Essentially, if BYB is closed, train B is considered inoperative and is accessible for maintenance and/or testing while train A supplies power to the rods. If train A senses an unsafe condition, it will trip the bypass breaker BYB and reactor trip breaker RTA, thereby interrupting power to the rod drive mechanism, and causing rods to gravity drop into the core.

012K6.02 Knowledge of a loss or malfunction of the following will have on the RPS: Redundant channels

Explain the purpose and operation including the design features and functions, capacities, and protective interlocks of the following major components associated with the Reactor Protection System (OPS52201I02):
Input error inhibit switch

Describe the operation and function of the following reactor trip signals, permissives, control interlocks, and engineered safeguards actuation signals associated with the Reactor Protection System and Engineered Safeguards Features to include setpoint, coincidence, rate functions (if any), reset features, and the potential consequences improper conditions (OPS52201I07):
• All reactor trip signals

Discuss the operation and alignment of each major component including precautions and limitations of operation, and applicable procedures, associated with the Reactor Protection System including (OPS52201I11):
• Reactor trip breakers (RTA and RTB)
• Bypass breakers (BYA and BYB)

RX PROT-52201I07 #19 this question was modified slightly in that the other question had a different reactor trip signal.

SQNP nrc exam 2002 - question was changed to add 48 volt power supply to tie directly to KA for loss or malfunction and ties to Input error inhibit switch.

original question

QUESTIONS REPORT

for Questions

RX PROT-52201I07 019/HLT//C/A (LEVEL 2/3) SYS/APE007EK2.02////

Given the following plant conditions:

- Unit 1 is operating at 12% power.
- Reactor Trip Breakers "A" & "B" are closed.
- Bypass Breaker "B" is racked in and closed.
- Bypass Breaker "A" is racked in and open.
- "B" Train SSPS Input Error Inhibit Switch is in INHIBIT for surveillance testing.

Which ONE of the following describes the response of the Reactor Trip and Bypass Breakers if RCS pressure drops below the Low Pressure Reactor trip setpoint with no operator action?

A. Reactor Trip Breakers "A" & "B" open, Bypass Breaker "B" opens.

B. Reactor Trip Breaker "A" opens and "B" remains closed, Bypass Breaker "B" remains closed.

C. Reactor Trip Breaker "B" opens and "A" remains closed, Bypass Breaker "B" opens.

D✔ Reactor Trip Breaker "A" opens and "B" remains closed, Bypass Breaker "B" opens.

OPS-52201I

A. Incorrect - RTB "B" does not open since the "B" train signal is inhibited. Examinee may believe both trains receive a trip signal from either train.
B. Incorrect - RTB "A" opens however the examinee may believe that neither
the "B" train RTB or bypass will open with "B" train signal inhibited. The bypass receives an "A" train signal.
C. Incorrrect - RTB "B" does not open. Examinee may believe the RTBs and
associated bypass breakers receive cross trained signals.
D. Correct - RTB "A" opens as it normally would, "B" train bypass breaker receives an "A" train trip signal.

Rx Protection lesson plan

The bypass breakers allow rod drive power to be shunted (diverted) around an open trip breaker for testing purposes. Bypass breaker BYB shunts RTB and is controlled by train A. Bypass breaker BYA shunts RTA, and is controlled by train B. Essentially, if BYB is closed, train B is considered inoperative and is accessible for maintenance and/or testing while train A supplies power to the rods. If train A senses an unsafe condition, it will trip the bypass breaker BYB and reactor trip breaker RTA, thereby interrupting power to the rod drive mechanism, and causing rods to gravity drop into the core.

SQNP nrc exam 2002

This interlock prevents both reactor trip breakers and both bypass breakers from being shut simultaneously. If all four breakers could be shut simultaneously, the redundancy requirement for reactor protection system design would be violated. (A reactor trip sensed by one train but not the other train would not cause a reactor trip.) The indication of a reactor trip, from receiving a general warning alarm on both trains, is the SSPS A TRN TRBL and SSPS B TRN TRBL (solid state protection system train A trouble and solid state protection system train B trouble) alarms. If both alarms are energized, a reactor trip signal is initiated.

Source Range Trip

There are two protection bistable status lights for the source range high flux bistables on TSLB-3. If a source range high flux reactor trip occurs, the SR HI FLUX RX TRIP (source range high flux level reactor trip) alarm will energize. The operator can bypass the source range trip and de-energize the source range when the P-6 interlock is energized. This interlock is energized when 1/2 intermediate range instruments are above 10^{-10} amps. This is indicated by the two, IR P-6 NC-35D and IR P-6 NC-36D, bistable status lights on TSLB-3 and the SOURCE RANGE PERMISSIVE P-6 light on the bypass and permissive light box.

The operator blocks source range trip by placing both the SOURCE RANGE BLOCK RESET A(B) TRN switches in the BLOCK position. On the bypass and permissives light box, the SOURCE RANGE TRAIN A(B) TRIP BLOCKED HI VOLT OFF lights should energize to confirm that source range reactor trips are blocked. The source range instruments are re-energized on a reactor shutdown by placing the SOURCE RANGE BLOCK RESET A(B) TRN switches in the RESET position. In case one IR channel failed high so the P-6 interlock cannot be de-energized, an interlock with P-10 allows the source range to be energized. Whenever 2/2 IR channels are below the P-6 setpoint and 3/4 PR channels are below the P-10 set point, the SR instruments will be energized and the SR high flux trips enabled.

An SR trip signal can be manually bypassed with switches at the nuclear instrumentation system (NIS) cabinets. If this is done, the associated SOURCE RANGE TRIP BYPASS NC-31D (32D) light on the bypass and permissives light box energizes. The common alarm NI SYS CH IN TRIP BYP (nuclear instrumentation system channel in trip bypass) also actuates.

The 23 positions on the MASTER RELAY SELECTOR switch select the master relay(s) of the circuits to be tested. When a master relay is selected, 48V DC will be applied to its coil energizing the master relay. At the same time 15V DC will be applied to the coils of the slave relays associated with the energized master relay. Operating either the SLAVE TEST A or SLAVE TEST B push buttons, as appropriate, will power the test indicating lamps which illuminate if the slave relay coils and associated wiring are not faulted (open circuited). The 15V DC power is not sufficient to cause actuation of the slave relay. The SLAVE TEST push buttons normally bypass power around the test indicating lamps.

Spray Test Panel (Figures 5 and 28)

The spray test panel checks the input relays associated with containment high-3 pressure. Remember that these bistables energize when containment pressure exceeds the setpoint. Therefore, when the process BISTABLE DEFEAT switches are placed in DEFEAT, the spray relays do not sense any change in state. The SPRAY TEST buttons allow individual energizing of the input relays and checking of the status lamps on the control board. The SPRAY TEST buttons are interlocked with the MODE SELECTOR switch on the relay test panel. The SPRAY TEST buttons will not operate the individual input relays unless the MODE SELECTOR switch is in the TEST position. The TEST position also interrupts 120V AC supply to the slave relays, and spray actuation is avoided. There are four lights on the bypass and permissives light box that energize as each containment spray channel is put in TEST. If more than one channel is put in TEST, the PROCESS CH SPR ACT TEST SEQ VIOLATION alarm energizes.

Logic Test Panel (Figures 6 and 26)

All of the logic functions and most functions of the reactor protection safeguards actuation system are checked from this panel.

The INPUT ERROR INHIBIT switch (one for each train) opens circuits to all input relay contacts, except those associated with permissive functions, when placed in INHIBIT. This prevents the input relays for that train from sending any trip signals to the respective train logic circuits. This is necessary to allow the semi-automatic tester to be the only source of trip signals.

The switch is placed in INHIBIT at the start of testing and effectively disables its train of automatic protection for the duration of the testing.

The MULTIPLEXER TEST switch has INHIBIT, NORMAL, and A + B positions. The INHIBIT position prevents the train from sending any information to the control board and computer. It is placed in the INHIBIT position at the start of logic testing to keep test signals from interfering with information from the operable train. The A + B position (referred to as A or B position) is used to split the two information trains and send their information out alternately.

The MULTIPLEXER INHIBIT DEFEAT push button prevents receiving any spurious alarms that might occur as the multiplexer test switch is rotated through its various positions.

The BLOCKING FUNCTION TEST switch checks that the logic circuits work correctly for two possible conditions: INHIBIT and NOT INHIBITED. For INHIBIT, trips which can be blocked are left unblocked (e.g., source range high flux). For NOT INHIBITED, these same trips are tested with their blocks reinstated to prove that they will not cause a trip when blocked.

The AUTOMATIC INPUT FUNCTION TEST section contains status lights as well as the TEST push button, which initiates a logic test. The amber TESTING light illuminates after the TEST push button is pressed and remains lit until the completion of the test. At this point, either the green GOOD light or red BAD lamp illuminates.

FUNCTION SELECTOR switches actually decide which logic circuit is tested. LOGIC A has an OFF position, and LOGIC B through D begin with position 1. The four switches are ganged so that no switch can function unless the switch at its left is in its highest position. Each switch position selects a different logic function (e.g., power range high flux reactor trip). A FUNCTION LOGIC lamp lights to inform the operator which type of circuit is being tested (1/2, 2/4, etc.).

When the TEST push button is pressed, trip pulses are sent to the logic circuit. For a 1/2 circuit, the semi-automatic tester tries both combinations (one of two inputs and two of two inputs tripped) before deciding if the circuit is functioning properly. For a 2/4 circuit, each possible combination is tested: 1/4, 2/4, 3/4, and 4/4. The duration of the logic test pulses is so short that the UV driver card output is never interrupted, and the train's reactor trip breaker is unaffected.

this failure mechanism is such that from one to several relays may fail to unlatch, even though MLBs 1-1 and 11-1 have extinguished. The bypass and permissive panel is another indicator used to verify reset of an SI signal. The lights on this panel could change state, indicating that the SI has reset, but some of the slave relays might not have reset. This would typically be realized when a valve does not stroke in response to a demand to a position other than the SI position. The impact is that the operator would not be able to regain control of some plant equipment associated with the affected slave relay. If this problem were to occur, operating the SI reset push buttons again would not correct the problem. To diagnose which relay or relays are affected, a walkdown of the SSPS output cabinet would have to be performed.

In lieu of requiring a walkdown and diagnosis of any affected relay during an event, FNP will rely on operator action to mitigate this event as follows: IF during any testing OR during actual operation, actuation of the MCB SI reset push buttons fails to reset any portion of the safety injection, THEN the operator will take the S821 RESET handswitch located in the SSPS test cabinet for the affected train(s) to the clockwise position to reset the slave relays.

For example, slave relay K603 lights MLB 1-1 and 11-1 from the respective train and slave relay K602 from each train lights bypass and permissive panel light 1-4. These lights could be showing an SI reset condition, but one of the other slave relays could still be latched. If slave relay K604 for A train was still latched, then the following components would not stroke in response to a demand to a position other than the SI position: 1C accumulator isolation valve V8808C, HHSI isolation valve V8803A, RCP SW INLET V3135, SW TO BLOWDOWN HX LETDOWN CHILLER INLET V3149, and SW FROM BLOWDOWN HX LETDOWN CHILLER OUTLET V3150.

General Warning (Figure 10)

The SSPS has a self-check feature that warns if the system is not entirely operational. When activated, the general warning circuitry energizes the red indicator on the front of the affected train's logic panel as well as de-energizing the green LED inside the logic bay. The nonaffected logic cabinet will indicate that the opposite train is in the general warning condition by de-energizing the "opposite train in general warning" amber LED. If both redundant trains develop trouble, the reactor will automatically be tripped.

Relays from the tester cards of both trains control contacts in the path between the UV driver card, the reactor trip, and bypass breaker UV coils. If both trains develop a fault, their relays energize to break current flow to the breakers.

Faults or actions which cause a protection train general warning are as follows:

1. Loss of either 48V DC power supply
2. Loss of either 15V DC power supply
3. The train's bypass breaker is closed (closure of both bypass breakers will trip the reactor)
4. INPUT ERROR INHIBIT switch in INHIBIT
5. MULTIPLEXER TEST switch in INHIBIT
6. LOGIC A switch out of OFF (LOGIC B, C, and D are interlocked with this switch so they do not cause an alarm)
7. PERMISSIVES switch out of OFF
8. MEMORIES switch out of OFF
9. MODE SELECTOR switch (in Relay Test Panel) in TEST
10. Loose or removed circuit board
11. Open ground return fuse

Review the functions of each of the above mentioned switches to ensure an understanding of why these positions cause a general warning.

The general warning circuit in a train will energize the appropriate SSPS A(B) TRN TRBL (solid state protection system train A(B) trouble) alarm, if any of the above problems are detected.

TECHNICAL SPECIFICATIONS

The following are the Technical Specifications associated with the Reactor Protection System. Those portions of the Technical Specifications related to other systems will be discussed in more detail in the appropriate lesson plan.

2. Undervoltage output cards--one card per train is provided. These cards supply the necessary current to keep the reactor trip breakers and reactor trip bypass breakers shut. A reactor trip occurs when the current output of the undervoltage output cards is interrupted.
3. Safeguards output cards--two cards per train are provided. These cards produce the current necessary to cause actuation of safeguards equipment. The cards are controlled by the logic circuits and in turn, control relays in the output relay bay.
4. Clock-counter card--produces the clock pulses used in both multiplexing and semi-automatic testing circuits. One card is used for each application.
5. Decoder card--converts clock pulses into addresses for multiplexing purposes.
6. Isolation cards--uses optical coupling to isolate the information sent to the control board and computer (via their de-multiplexers) from the critical protective system portions.
7. Semi-automatic tester cards--tests logic circuitry. It also senses failure conditions in the train and activates a GENERAL WARNING alarm to alert the operators that the system is not entirely operational.
8. Memory card--stores information regarding trip status, interlocks, bypasses and permissives.

The connector panel sends the multiplexed signals to the control board and plant computer. Train A is connected to the control board demultiplexer, and train B is connected to the computer demultiplexer (Figure 4). A data OR cable connected between the logic cabinets of both trains keeps multiplexed information consistent. This arrangement allows either train to inform either base (computer or control board) of an unsafe condition. The data OR cable also allows one train to be tested without affecting indications at the control board or computer. The synchronization cables allow the train with the faster clock to control the overall system multiplexing rate.

Power to the cards is taken from two of four instrumentation buses through redundant 48V DC (for trip and actuation signals) and 15V DC (for system electronics) power supplies (see figures 12 & 13). The two 48V DC and the two 15V DC power supplies share their respective loads. Each drawer is powered by a different 120V AC preferred instrument bus. Loss-of-any

one of the four buses will create a general warning indication on the train and on the main control board (MCB).

Below the power supply drawers is the spray test panel where push buttons provide for actuation and checking of the containment pressure input relays without the risk of spray actuation. The general warning test light emitting device (LED) indicators are also mounted on the spray test panel. (See Figure 5.) A door bracket, which contains the general warning and DC power supply indicators and general warning test LED indicators, overlaps the left side of the panel.

The logic test panel is between the spray test panel and card cages. (See Figures 6 and 26.) It uses a tester board and a clock-counter board (both located in the card cage) and selector switches located on the panel to locally perform a complete check of all solid-state logic. An automatic logic test sequencer permits rapid checks of the system (10 min/train) on a periodic basis. The logic circuits are tested without actuation of plant equipment by using pulse techniques and inhibit circuits. The logic tester also provides a method of manually checking the logics under certain precautions.

Output Relay Cabinet (Figures 4 and 11)

The output relay cabinet contains the master relays, slave relays, and fuses necessary to implement required safeguard outputs and/or train associated circuitry. The output relay cabinet also contains connection receptacles (used in conjunction with the safeguards test cabinet for functional testing of slave relays) and a test panel (to perform continuity checks of slave relay coils).

The output relay cabinet contains master relays which are energized by the safeguards output cards. The master relay contacts apply power to a number of slave relays. One master relay contact can control one slave relay. The slave relay contacts, in turn, apply power to plant process equipment (e.g., pumps, solenoid valves, drive motors, power relay coils). The slave relays are coil and plunger type, AC-operated relays. The master relays are general purpose, DC-operated, four-pole relays. Two master relay locations are reserved for use as general warning relays. The relay test panel (located near the bottom of the cabinet) is used to check the master

____ 5.3.2.7 Depress the black TRIP button located on the front of Reactor Trip BYPASS BREAKER B to energize it's shunt coil and check that the breaker opens.

____ 5.3.2.8 Depress the black CLOSE button on the front of Reactor Trip BYPASS BREAKER B and verify closure.

____ 5.3.2.9 Depress the BLOCK BYPASS-UV button, located in the A TRAIN SHUNT TRIP TEST CABINET, to deenergize the Reactor Trip BYPASS BREAKER B undervoltage trip coil and check that the breaker opens.

____ 5.3.2.10 Verify BYPASS BREAKER B open by observing the breaker open indication flag on the front of the breaker.

____ 5.3.2.11 Remove the BYPASS BREAKER B control power fuses from the top cubicle above the breaker. (See Figure 3.)

____ 5.3.2.12 Rack BYPASS BREAKER B to the CONNECT position.

5.3.2.13 Reinstall the BYPASS BREAKER B control power fuses.

____ I&C 5.3.2.14 In the B Train REACTOR TRIP SWITCHGEAR cabinet rear terminal panel Q1C11E004A-AB, verify the voltage between TB5-6 and TB5-7 is ~ 0 VDC. IF the voltage is > 0.5 volts, THEN notify Maintenance that either the bypass breaker's auxiliary switch contacts or secondary disconnects are not made up properly. Submit a DR to investigate and repair the problem.

5.3.2.15 In the B Train REACTOR TRIP SWITCHGEAR cabinet rear terminal panel Q1C11E004A-AB, verify the following voltages:

____ I&C 5.3.2.15.1 Voltage between TB5-1 (+) and TB5-4 (-) is 48 (44 to 52) VDC.

____ I&C 5.3.2.15.2 Voltage between TB4-1 (+) and TB4-4 (-) is 125 (110 to 140) VDC.

____ 5.3.2.16 Depress the black CLOSE button on the front of Reactor Trip BYPASS BREAKER B and verify closure.

Record Bypass Breaker closure time _____

5.3.3 In the B Train REACTOR TRIP SWITCHGEAR cabinet rear terminal panel Q1C11E004A-AB, verify the following (Ref. Fig. 1 and 2).

____ I&C 5.3.3.1 Voltage between TB5-1 (+) and TB5-4 (-) is 0 (-1.0 to 1.0) VDC.

____ I&C 5.3.3.2 Voltage between TB4-1 (+) and TB4-4 (-) is 0 (-1.0 to 1.0) VDC.

__/__ 5.3.4 On SOLID-STATE PROTECTION SYSTEM TRAIN-A LOGIC CABINET verify the GENERAL WARNING lamp OFF.

____ 5.3.5 On SOLID-STATE PROTECTION SYSTEM TRAIN-B LOGIC CABINET verify the GENERAL WARNING lamp ON.

____ 5.3.6 In SOLID-STATE PROTECTION SYSTEM TRAIN-B OUTPUT CABINET, at the OUTPUT RELAY TEST PANEL, place the MODE SELECTOR switch in the TEST position. Verify that the OPERATE lamp is OFF.

____ 5.3.7 In the SOLID-STATE PROTECTION SYSTEM TRAIN-B LOGIC CABINET, at the LOGIC TEST PANEL, verify that the CONTINUITY lamp is ON.

____ 5.3.8 In the SOLID-STATE PROTECTION SYSTEM TRAIN-B LOGIC CABINET, at the A108 tester card, verify that the top 4 LED's (CR80, CR78, CR86 and CR84) are ON.

____ *5.3.9 At the SOLID-STATE PROTECTION SYSTEM TRAIN-B LOGIC TEST PANEL, depress and hold the AUTOMATIC INPUT FUNCTION TEST push-button. Verify that the CONTINUITY lamp and the top 4 LED's (CR80, CR78, CR86, and CR84) of the A108 TESTER card are OFF while the test push-button is depressed, then release the push-button.

5.3.10 Place the INPUT ERROR INHIBIT switch to the INHIBIT position.

LOCATION EC4

SETPOINT: Not Applicable

C4
SSPS A TRN TRBL

NOTE: The following will cause a General Warning in A Trn SSPS except for item 14.

ORIGIN:
1. +48V Power Supply No. 1
2. +48V Power Supply No. 2
3. +15V Power Supply No. 1
4. +15V Power Supply No. 2
5. Card Interlock row No. 1, 2, 3, 4, & 5
6. Ground Return Fuse (5FU9)
7. Input Error Inhibit Switch (S509)
8. Logic "A" Switch (S501)
9. Multiplexer Test Switch (S508)
10. Permissives Switch (S505)
11. Memories Switch (S506)
12. Output Relay Mode Selector Switch (S602)
13. Reactor Trip Bypass Breaker auxiliary contact
14. Output Relay Power Fuse (6FU1) Monitor Relay K639

PROBABLE CAUSE

1. Solid State Protection Cabinet Train A, 48VDC or 15VDC Power Supply failure.
2. Loose or removed circuit card.
3. Ground fault resulting in Ground Return Fuse (5FU9) failing.
4. One or more of the above switches in any position other than Normal.
5. Train A Reactor Trip Bypass Breaker closed.
6. Output relay power fuse failure.
7. Vital panel supply breaker tripped.

AUTOMATIC ACTION

1. IF both Train A AND B Solid State Protection System Trouble alarms are actuated, THEN a reactor trip will occur.

LOCATION EC4

IMMEDIATE ACTION

1. IF ALARM IS DUE TO PREPLANNED OPERATIONAL OR MAINTENANCE ACTIVITIES, THEN NO ACTION IS NECESSARY, IF NOT, NOTIFY APPROPRIATE PERSONNEL TO DETERMINE AND CORRECT THE CAUSE OF THE ALARM.

SUPPLEMENTARY ACTION

1. Refer to FNP-1-SOP-40.0, REACTOR CONTROL AND PROTECTION SYSTEM.
2. Return all switches to normal as soon as possible.
3. IF 120V vital AC bus has lost power, THEN refer to the appropriate annunciator window WD1, or WD2, 1A or 1B INV FAULT, for guidance.
4. Refer to Technical Specifications LCOs 3.3.1 and 3.3.2.

References: A-177100, Sh. 244; U-198768, Sect. 2.5.7; Technical Specifications

FARLEY JANUARY 2005 EXAM

EXAM 50-348 AND 50-364/2005-301
JANUARY 10 - 14, 2005
JANUARY 18, 2005 (written)

DRAFT RO WRITTEN EXAM

OpsRcc100
Reactor Trip Switchgear
Trip & Test Scheme (Train "A")
Figure 14

INTENTIONALLY OMITTED

PER SISP REVIEW

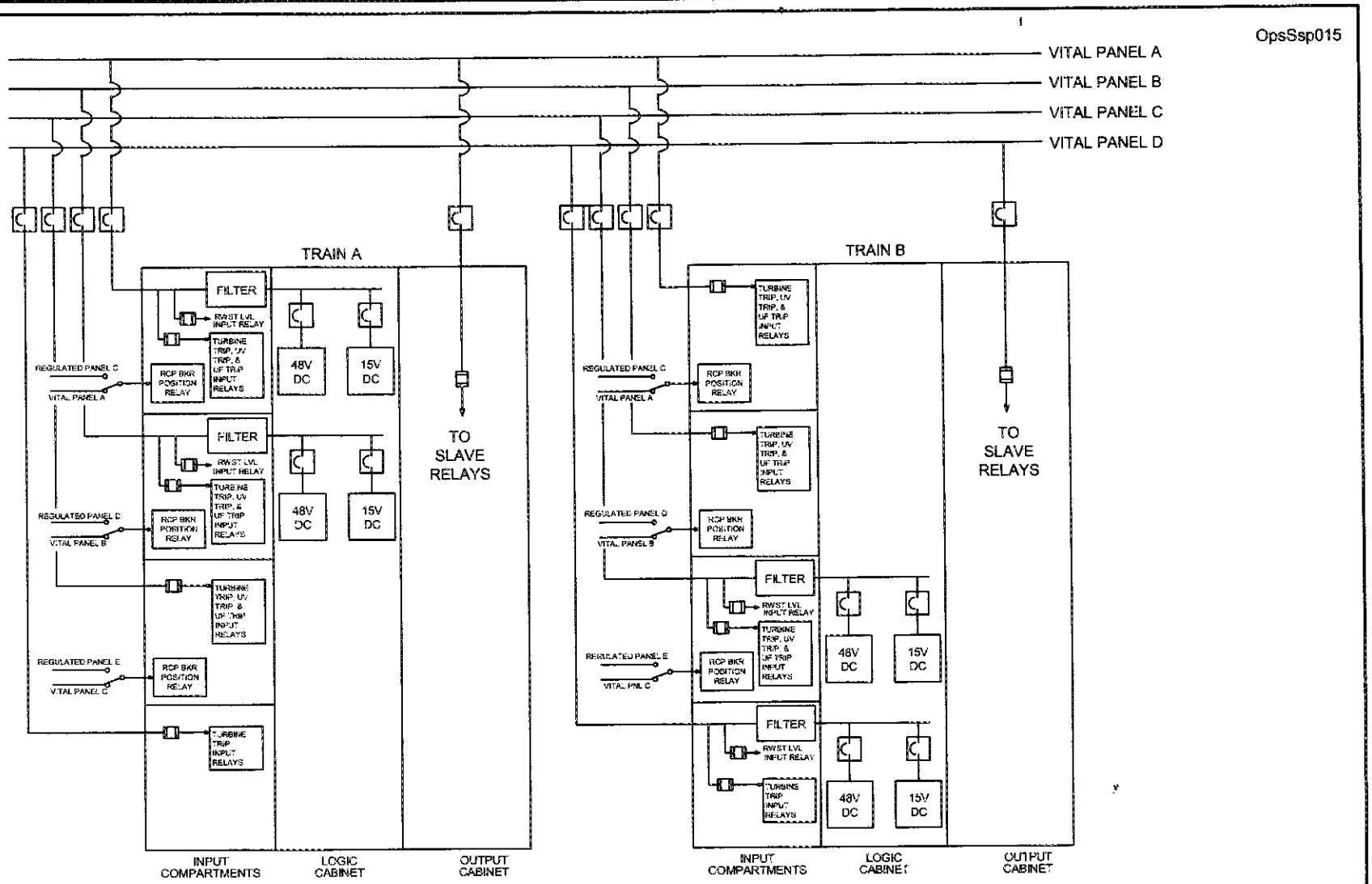

SSPS 120V AC Power Distribution

Figure 11

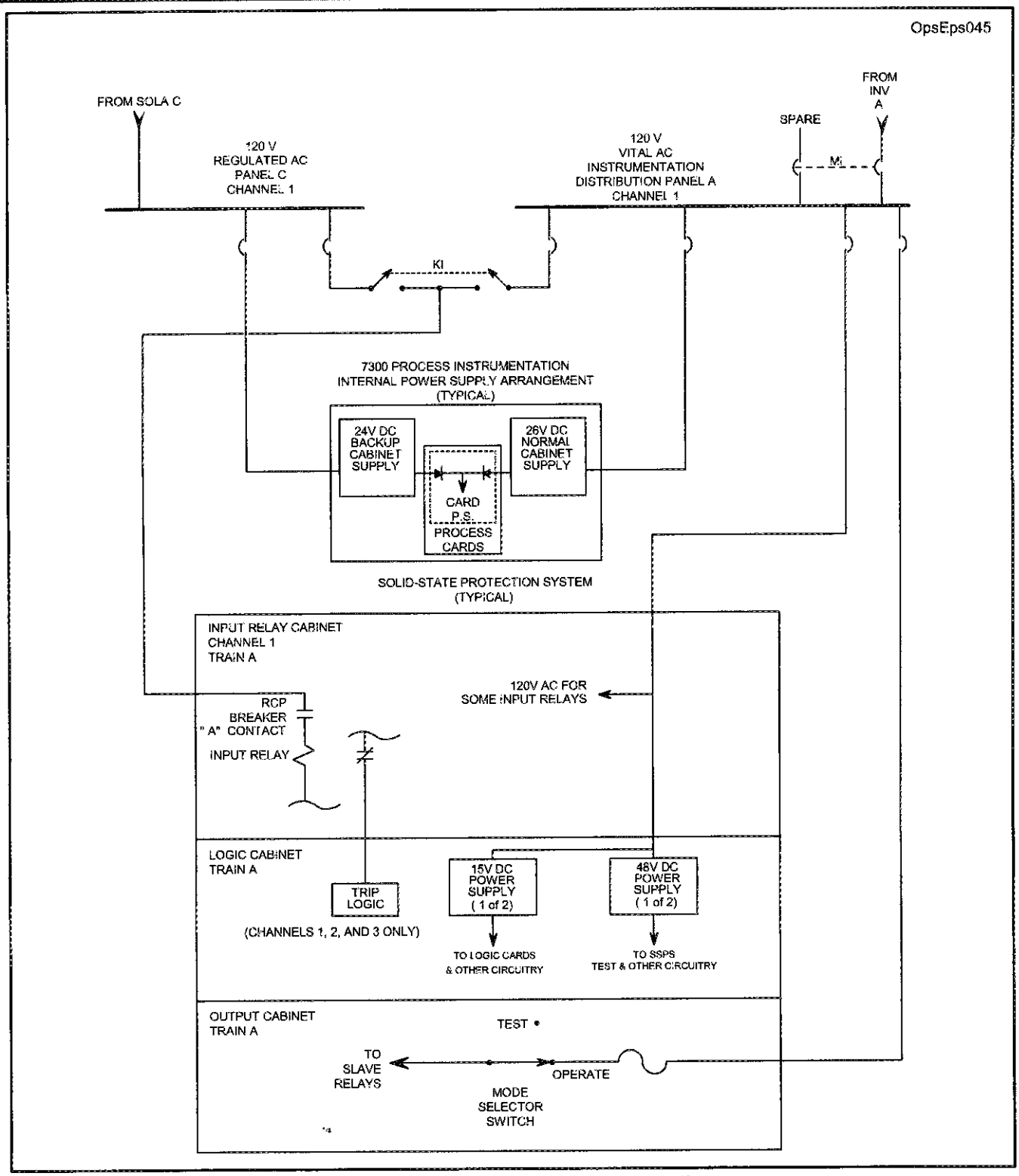

120V AC Distribution (Detail)

Figure 13

The 23 positions on the MASTER RELAY SELECTOR switch select the master relay(s) of the circuits to be tested. When a master relay is selected, 48V DC will be applied to its coil energizing the master relay. At the same time 15V DC will be applied to the coils of the slave relays associated with the energized master relay. Operating either the SLAVE TEST A or SLAVE TEST B push buttons, as appropriate, will power the test indicating lamps which illuminate if the slave relay coils and associated wiring are not faulted (open circuited). The 15V DC power is not sufficient to cause actuation of the slave relay. The SLAVE TEST push buttons normally bypass power around the test indicating lamps.

Spray Test Panel (Figures 5 and 28)

The spray test panel checks the input relays associated with containment high-3 pressure. Remember that these bistables energize when containment pressure exceeds the setpoint. Therefore, when the process BISTABLE DEFEAT switches are placed in DEFEAT, the spray relays do not sense any change in state. The SPRAY TEST buttons allow individual energizing of the input relays and checking of the status lamps on the control board. The SPRAY TEST buttons are interlocked with the MODE SELECTOR switch on the relay test panel. The SPRAY TEST buttons will not operate the individual input relays unless the MODE SELECTOR switch is in the TEST position. The TEST position also interrupts 120V AC supply to the slave relays, and spray actuation is avoided. There are four lights on the bypass and permissives light box that energize as each containment spray channel is put in TEST. If more than one channel is put in TEST, the PROCESS CH SPR ACT TEST SEQ VIOLATION alarm energizes.

Logic Test Panel (Figures 6 and 26)

All of the logic functions and most functions of the reactor protection safeguards actuation system are checked from this panel.

The INPUT ERROR INHIBIT switch (one for each train) opens circuits to all input relay contacts, except those associated with permissive functions, when placed in INHIBIT. This prevents the input relays for that train from sending any trip signals to the respective train logic circuits. This is necessary to allow the semi-automatic tester to be the only source of trip signals.

The switch is placed in INHIBIT at the start of testing and effectively disables its train of automatic protection for the duration of the testing.

The MULTIPLEXER TEST switch has INHIBIT, NORMAL, and A + B positions. The INHIBIT position prevents the train from sending any information to the control board and computer. It is placed in the INHIBIT position at the start of logic testing to keep test signals from interfering with information from the operable train. The A + B position (referred to as A or B position) is used to split the two information trains and send their information out alternately.

The MULTIPLEXER INHIBIT DEFEAT push button prevents receiving any spurious alarms that might occur as the multiplexer test switch is rotated through its various positions.

The BLOCKING FUNCTION TEST switch checks that the logic circuits work correctly for two possible conditions: INHIBIT and NOT INHIBITED. For INHIBIT, trips which can be blocked are left unblocked (e.g., source range high flux). For NOT INHIBITED, these same trips are tested with their blocks reinstated to prove that they will not cause a trip when blocked.

The AUTOMATIC INPUT FUNCTION TEST section contains status lights as well as the TEST push button, which initiates a logic test. The amber TESTING light illuminates after the TEST push button is pressed and remains lit until the completion of the test. At this point, either the green GOOD light or red BAD lamp illuminates.

FUNCTION SELECTOR switches actually decide which logic circuit is tested. LOGIC A has an OFF position, and LOGIC B through D begin with position 1. The four switches are ganged so that no switch can function unless the switch at its left is in its highest position. Each switch position selects a different logic function (e.g., power range high flux reactor trip). A FUNCTION LOGIC lamp lights to inform the operator which type of circuit is being tested (1/2, 2/4, etc.).

When the TEST push button is pressed, trip pulses are sent to the logic circuit. For a 1/2 circuit, the semi-automatic tester tries both combinations (one of two inputs and two of two inputs tripped) before deciding if the circuit is functioning properly. For a 2/4 circuit, each possible combination is tested: 1/4, 2/4, 3/4, and 4/4. The duration of the logic test pulses is so short that the UV driver card output is never interrupted, and the train's reactor trip breaker is unaffected.

17. 012K6.10 001/2/1/RPS/C/A 3.3/3.5/BANK/FA011005/RO/

The following plant conditions exist a few minutes after the Reactor tripped from 33% power due to a loss of "B" RCP:

• Tavg	549°F and falling
• Main Turbine	Not tripped
• Both SGFPs	running
• Feed reg valves	Open
• Steam Dumps	Not Armed and closed

This plant response to the reactor trip suggests that a failure has occurred in which permissive circuit?

A. P-4, Rx Trip Interlock.

B. P-7, Low Power Rx Trip Block Permissive.

C. P-8, Single Loop Loss of Flow Permissive.

D. P-9, Turbine Trip Permissive.

OPS-52201I Reactor Protection lesson plan
A. Correct - **P-4, Rx Trip Interlock.**
If P-4 had worked properly, when the Rx tripped the FRVs would be closed at 554°F, the main turbine would have tripped, the steam dumps, when armed by P-4, would be controlling temperature at 547°F and the steam dumps would be open at this point. The steam dumps are not armed by the C-7, loss of load b/c the turbine is removing staem from the Sgs and RCS temp is decreasing due to that. Since C-7 does not arm the dumps and the Rx tripped, P-4 failing would cause the dumps are closed in this situation.

B. Incorrect - P-7 prevents unnecessary Rx trips when <10% power. This Reactor trip did not occur as a result of P-7 not functioning properly. This Rx trip occurred due to a Loss of one RCP >30% power. P-7 auto unblocks the following Rx trips: Low PCS flow, RCP bkr trip, RCP bus UV and UF, Pzr low pressure and high level.

C. Incorrect - P-8 prevents a Rx trip from a loss of flow or RCP bkr open in a single loop when active and auto re-instates > 30% Rx power. Since there was a Rx trip at >30% power, this permissive worked as designed.

D. Incorrect - P-9 prevents a Rx trip from a turbine trip when <35% power. Since the power level is 33%, if the turbine tripped then the Rx would not trip. Since the turbine is still on line, something prevented the turbine from tripping and P-9 has nothing to do with this feature.

012K6.10 Knowledge of a loss or malfunction of the following will have on the RPS: Permissive circuits

Describe the operation and function of the following reactor trip signals, permissives, control interlocks, and engineered safeguards actuation signals associated with the Reactor Protection System and Engineered Safeguards Features to include setpoint, coincidence, rate functions (if any), reset features, and the potential consequences improper conditions (OPS52201I07):

- All reactor trip signals
- All permissive signals (P-4, P-6, P-7, P-8, P-9, P-10, P-11, P-12, P-13, and P-14)

RX PROT-52201I07 #12

TABLE 5, CONT.
PERMISSIVES

PERMISSIVE	SOURCE	SETPOINT	COINCIDENCE	LIGHT STATUS	FUNCTION
P-8 Single Loop Loss of Flow Permissive	NIS 41, 42, 43, and 44	30% Rx Power	P-8 active when: 3/4< setpoint P-8 inactive when: 2/4> setpoint	Lit < setpoint	Prevents a Rx trip from loss of flow or RCP breaker open in a single loop when active. Auto reinstates Rx trip when inactive.
P-9 Turbine Trip Permissive	NIS 41, 42, 43, and 44	35% Rx Power	2/4 > setpoint 3/4 < setpoint (Permission to trip turbine)	Lit < setpoint	Auto reinstates a Rx trip from turbine trip. Prevents a Rx trip from a turbine trip.
P-10 PR Power Escalation Permissive	NIS 41, 42, 43, and 44	10% Rx power	P-10 active when 2/4 > setpoint (permission to block trips) P-10 inactive when 3/4< setpoint	Lit > setpoint	Above setpoint. Allows power escalation into the PR up to 100% power by: 1. Turning Both Train A & B IR Blocks switches to BLOCK . a. Blocks IR Hi flux Rx trip b. Blocks IR Hi flux rod stop 2. Turning both train A & B PR Block switches to BLOCK blocking PR Hi flux (Low Setpoint) Rx trip. 3. Interlocks the SR Hi volt by inhibiting manual reset. Below setpoint. Auto unblocks: 1. IR Hi flux Rx trip IR Hi flux rod stop 2. PR Hi flux (low setpoint) Rx trip Allows manual reinstatement of SR Hi Volt & SR Hi flux Rx trip by turning both Train A & B source range block switches to reset. Provides input to P-7

TABLE 5
PERMISSIVES

PERMISSIVE	SOURCE	SETPOINT	COINCIDENCE	LIGHT STATUS	FUNCTION
P-4 Reactor Trip Interlock	Reactor Trip and Bypass Breakers	Breakers Open	Train A RTA & BYA open Train B RTB & BYB open	No Light	Prevents a rapid cooldown of primary system after a reactor trip. 1. Trips Turbine 2. Closes F.W. Reg Valves on low T_{avg} 3. Seals in F.W. Reg Valve isolation from S.I. and S/G Hi-Hi Level 4. Allows S.I. signal to be blocked after S.I. initiation 5. Resets Hi Steam Flow Setpoint 6. Arms steam dumps on reactor trip. Defeats the output of the load rejection controller and places the plant trip controller into control.
P-6 I/R Power Escalation Permissive	NIS 35 and 36	10^{-10} amps	1/2 > Setpoint Permission to Block Source Range 2/2 < setpoint	Lit > Setpoint	Allows power escalation into the IR by turning both Train A & B Source Range Block switches to BLOCK Above setpoint: 1. Blocks SR Hi Flux Reactor Trip 2. Turns off Hi Volt to SR Instruments Below setpoint: 1. auto reinstates Hi volt to SR Instruments 2. reinstates trip
P-7 Low Power Rx Trip Block Permissive	P-10 or P-13	10% Rx Power 10% Turbine Power	P-7 active when: 3/4 < P-10 or 2/2 < P-13 P-7 inactive when: 2/4 > P-10 or 1/2> P-13	Lit < setpoint	Prevents unnecessary reactor trips at low power by auto blocking following Rx trips below setpoint. 1. Low Rx Coolant Flow 2. RCP Breaker trip 3. RCP Bus U.V. 4. RCP Bus U.F. 5. PRZR Low Pressure 6. PRZR High Level Auto unblocks above Rx Trips above setpoint

The loss-of-load controller output feeds four signal circuits. Each signal circuit is adjusted to respond to specific loss-of-load controller output signal values. Each signal circuit, in turn, feeds the I/P converters associated with one steam dump valve bank. Through these signal circuits, the load rejection controller linearly modulates the four steam dump valve banks in their proper sequence. The following table lists the resultant steam dump valve bank response as the loss-of-load controller ΔT changes.

BANK LOAD REJECTION ΔT RESPONSE

Bank	Fully Closed	Fully Open
1	4.0°F	6.5°F
2	6.5°F	9.0°F
3	9.0°F	11.5°F
4	11.5°F	14.0°F

T_{AVG}-Plant Trip Controller

When the steam dump mode selector switch is selected to the T_{AVG} position and train B of reactor protection has sensed a Reactor trip, the output of the plant trip (Figure 7) controller is automatically lined up to the I/P converters. Conversely, the output of the loss-of-load controller is automatically blocked. In this T_{AVG}-plant trip submode of operation, the positioning signal strength varies in direct proportion to a temperature deviation between the output of the Tavg median signal selector and $T_{no\text{-}load}$. The same compensated; median T_{AVG} signal used in the loss-of-load submode is also used here. The $T_{no\text{-}load}$ signal (547°F) is a fixed signal. T_{AVG} and $T_{no\text{-}load}$ are inputs to a comparator whose output is converted to a positioning demand signal in the turbine trip/plant trip controller. The characteristics of this controller are also expressed in percent steam flow versus the deviation degrees between T_{AVG} and $T_{no\text{-}load}$ (refer to Figure 9). Failure of a T_{AVG} channel high would not affect the steam dumps due to the median signal selector, which would auctioneer out the high signal.

The plant trip controller provides the same process instrumentation to steam dump system link as the loss-of-load controller. The plant trip controller accomplishes this link for the

T_{AVG}-turbine trip submode. Because the rod control system reactivity control is not available, the plant trip controller ensures that following the reactor trip, the steam generator code safety valves do not actuate, and T_{AVG} returns to its no-load value.

The plant trip controller temperature deviation band evaluation is a simple process. Without the rod control system, no dead band ΔT is required. The proportional band is 28°F ΔT.

The plant trip controller output controls the steam dump valve signal circuits. Therefore, the plant trip controller output operates the steam dump valve banks according to the temperature changes listed in the following table.

BANK -PLANT TRIP ΔT RESPONSE

Bank	Fully Closed	Fully Open
1	0°F	7°F
2	7°F	14°F
3	14°F	21°F
4	21°F	28°F

Steam Pressure

When the operator selects the STM PRESS position (Figure 10) on the steam dump mode selector switch, the positioning signal varies with a pressure difference between PT-464 and the setpoint. The pressure transmitter (PT-464) measures the actual main steam common header pressure, which is also used as an input to the control circuitry for the automatic steam generator feed pump speed control. The pressure setpoint can be adjusted by using the dial on the steam pressure controller manual/auto (M/A) station (PK-464) located on the MCB. The normal setpoint, 1005 psig, is lower than the steam generator atmospheric relief setpoint so that the atmospheric relief actuation does not normally occur during the steam pressure mode of operation. The 1005 psig setting also corresponds to the plant no-load T_{AVG} value of 547°F. When the T_{AVG} position is selected, this automatic pressure setpoint has no effect on the operation of the steam dump system. Caution should be observed, however, to note the proper pressure setpoint before selecting the STM PRESS position. If the STM PRESS position is

interlock selector switches should be placed in the OFF/RESET position to prevent inadvertent operation of the steam dumps while transferring between modes of operation.

When a P-12 signal exists and the operator places the steam dump bypass interlock switch in the BYP INTLK position, a STEAM DUMP TRAIN A OR B INTERLOCK BYPASS status light is energized on the MCB. This light informs the operator that a P-12 bypass is actuated.

Arming Signals

There are three arming signals (Figure 13) associated with the blocking solenoid valves. They are:

1. Turbine Loss-of-Load (C-7)
2. Plant Trip (P-4)
3. STM PRESS mode of operation

During normal plant operation in the T_{AVG} mode, all blocking solenoid valves are deenergized, which prevents all steam dump valve operation. When the magnitude of a turbine load rejection exceeds 15 percent as indicated by the rate of change in turbine impulse chamber pressure from PT-447, the C-7 arm signal energizes the steam dump valve blocking solenoid valves. The source of this signal (PT-447) is different from the pressure signal (PT-446) used to generate T_{ref} for the loss-of-load controller and the automatic rod control circuit. This signal separation is important because it removes the possibility that low failure of a single impulse pressure transmitter would cause unwanted steam dump actuation. Failures of PT-446 have previously been discussed and, as was pointed out, resulted only in a change in valve demand signal. PT-447 failures result only in the generation of an arming signal with no demand signal being generated. PT-447 failing low may result in arming of the dumps but would not result in actual steam dump operation unless T_{AVG} was high. IF C-7 is received, operations management expectation is that C-7 will not be reset. Failure of PT-447 high would result in the inability to generate the loss-of-load arming signal. The loss-of-load setpoint is 15% with a 120 second time constant. When a loss-of-load is sensed then the loss-of-load bistable trips and energizes the steam dump valve blocking solenoid valves. This energization allows the loss-of-load controller to position the eight condenser dump valves.

The amount of turbine impulse chamber pressure change is differentiated in a rate-lag unit. Because of the characteristics of a rate-lag circuit, the below setpoints may be a little misleading. However, when a load rejection takes place at a continuous, steady ramp of 7.5 percent per minute, 150 seconds (figure 15) may actually pass before the output of the rate circuit reaches the C-7 bistable setpoint. The electronic conditioning circuits, such as lead-lag, integral, and rate, have time constant values associated with them. The significance of this time constant is that it is a relative measure of the time necessary for the circuit output to reach a value of 63.2% of its input. The C-7 arming bistable requires at least a 7.5 percent per minute load rejection to actuate, and this ramp must exist for at least 150 seconds. Any higher load rejection rates cause the circuit output to reach these arming setpoints much sooner. A 10 percent per minute ramp requires approximately 95 seconds to arm C-7, for example. The time period to trip the loss-of-load bistable decreases as the rate increases. When the bistable setpoint is reached, the blocking solenoid valves are energized.

As previously mentioned in the section on dump valve positioning signal generation, the C-7 arming signal seals or locks in once it has energized. This prevents the dump valves from shutting once impulse pressure stops decreasing. Upon completion of a large load rejection, the operator must momentarily select the RESET position on the steam dump mode selector switch to clear the C-7 arming signal. Failure to do so would keep the blocking solenoids energized, which leaves the steam dump system in other than its most reliable lineup. An indication that the C-7 arming signal is present is given by status lights (LOSS OF LOAD INTERLOCK C7-A) on the MCB. If the C-7 arming signal is due to a PT 447 failure, it is an operations management expectation that the C-7 signal <u>NOT</u> be reset.

When a Rx trip occurs in the T_{AVG} mode of operation, the plant trip (P-4) arming signal energizes the steam dump valve blocking solenoid valves. The (P-4) signal also shifts the steam dump valve control to the plant trip controller. The signal that arms the condenser steam dump valves is a plant trip, as sensed by train A of reactor protection, while the signal that aligns the plant trip controller to the I/P converters originates at train B of reactor protection.

The final action that energizes the arming solenoid valves is simply the selection of STM PRESS on the steam dump mode selector switch. This action arms only the condenser steam dump valves as they provide sufficient capacity for such operations as startup, shutdown, and cooldown.

18. 013K1.01 001/2/1/ESF/MEM 4.2/4.4/BANK/FA011005/RO/

With Unit 2 at 100% power, which one of the following is the method used to prevent an inadvertent spraydown of containment components due to a loss of detector power or protective train power, or an erroneous containment pressure trip signal sent to the protection system?

A. The Containment Spray pumps start on a "P" signal only if a Safety Injection signal is also present.

B. Two containment pressure bistables must energize to send a High-3 pressure signal to cause a "P" signal.

C. Two containment pressure bistables must energize to send both High-1 and High-3 pressure signals to cause a "P" signal.

D. The Containment Spray pumps start on a "P" signal, but the discharge valves open only if a Safety Injection signal also is present.

A. Incorrect - The CS pumps will start on a P signal with no SI signal unless an LOSP is present. If an LOSP signal is present, then CS pumps will start only with an SI signal present as well to prevent starting CS pumps w/o first looking at DG loading.

B. Correct - **Two containment pressure bistables must energize to send a High-3 pressure signal to cause a "P" signal.**
This is an energize to actuate design to prevent inadvertent spray actuation.OPS-52201I under fail-safeness.

C. Incorrect - Hi-1 is a ctmt pressure SI signal and Hi-1 does not have to be in to actuate CS bistables. 2/4 ctmt pressure transmitters will cause a CS actuation signal unless an LOSP has occured.

D. Incorrect - the CS discharge valves, 8820A/B always open on a P signal (CS actuation signal). It is not dependent on CS pump start or SI signal criteria.This distracter can be confused with the CS pumps that need a SI signal to start only IF an LOSP is in progress.

013K1.01 Knowledge of the physical connections and/or cause effect relationships between ESFAS and the following systems:
Initiation signals for the ESF circuit logic.

List the automatic actions associated with the Containment Spray and Cooling System components and equipment during normal and abnormal operations including (OPS40302D07):
• Normal control methods
• Automatic actuation including setpoint (example SI, Phase-B, LOSP) and the effect of selecting the containment cooler control to local.
• Protective isolations such as high flow, low pressure, low level including setpoint
• Protective interlocks

Describe the operation and function of the following reactor trip signals, permissives, control interlocks, and engineered safeguards actuation signals associated with the Reactor Protection System and Engineered Safeguards Features to include setpoint, coincidence, rate functions (if any), reset features, and the potential consequences improper conditions (OPS52201I07):
• All reactor trip signals
• All permissive signals (P-4, P-6, P-7, P-8, P-9, P-10, P-11, P-12, P-13, and P-14)
• All control interlocks (C-1, C-2, C-3, C-4, C-5, C-7, C-9, C-11, and C-20)
• Safety injection
• Phase A isolation
• Phase B isolation
• Steam line isolation
• Feedwater isolation
• Containment spray

RX PROT-52201I07 #52

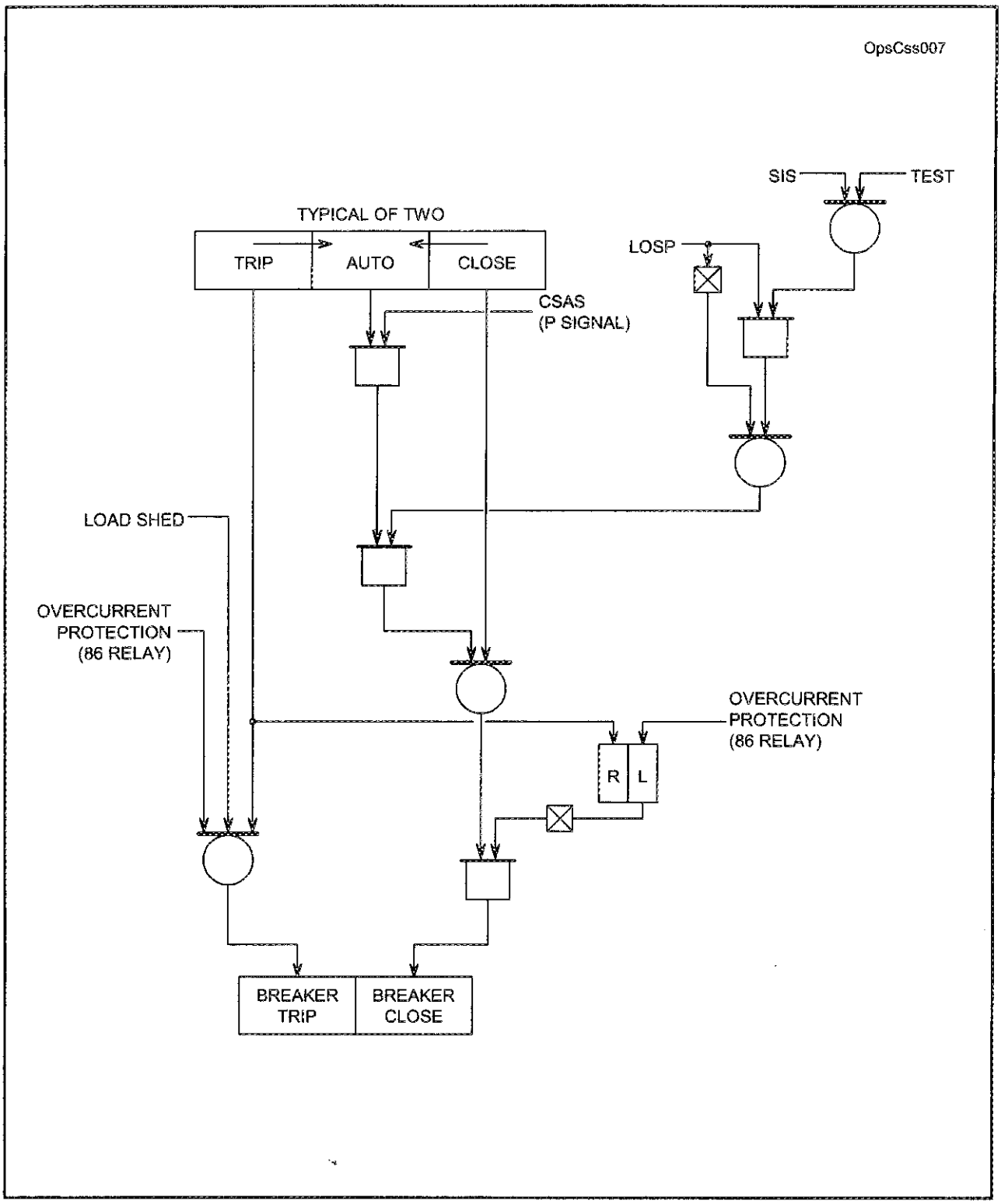

Containment Spray Pump Controls

Figure 6

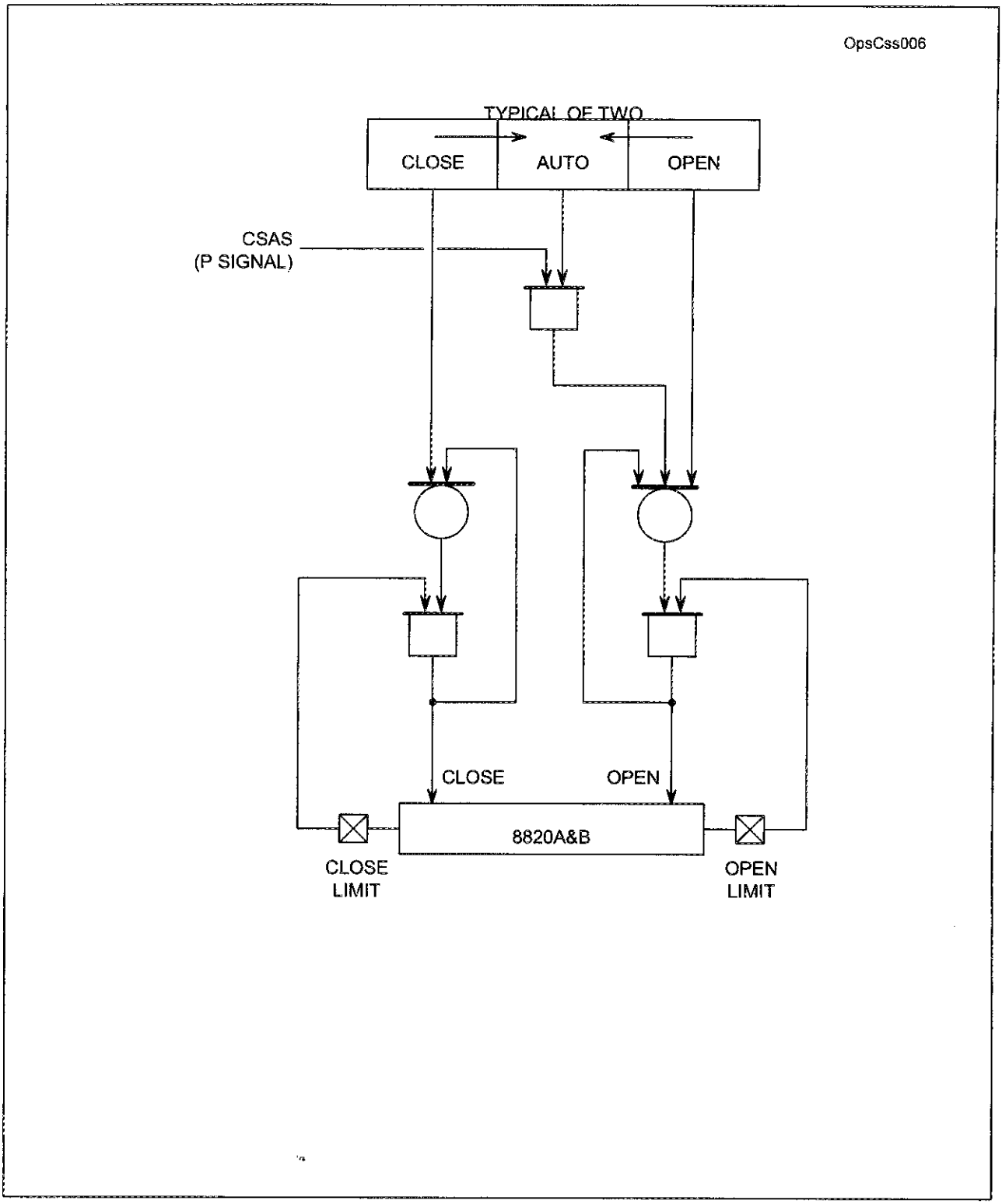

Containment Spray Pump to Spray Header Isolation 8820A(B)

Figure 5

surrounded by a concentric guard pipe. Three annular seal rings are installed around the guard pipe at each end to minimize any postulated bypass leakage along the outside of the guard pipe. The concentric guard pipes enter the auxiliary building in a trench within the spray pump room; therefore, any postulated airborne leakage that escapes outside the concentric guard pipes is processed by the auxiliary building ventilation. Within the auxiliary building, each suction line is located within a protective chamber called an encapsulating device. This chamber will withstand the containment design pressure in addition to the head of water present in the containment sump at the end of the injection phase. However, the valve encapsulations do not form part of the containment isolation boundary. From the protective chamber to the first motor-operated isolation valve inside the auxiliary building, a concentric guard pipe surrounds each suction line. The first motor-operated isolation valve (MOV-8826A and B) is surrounded by a watertight closure. This arrangement, which is the same as that used with the suction lines in the low-head safety injection system, ensures that, in the unlikely event of leakage from the suction pipe during long-term recirculation, the integrity of the recirculation system is not impaired, and public safety is not jeopardized. (See Containment Structure and Isolation lesson.)

Containment Spray Pumps

The horizontal, single-stage centrifugal type, motor-driven spray pumps have the capability of delivering 2600 gpm at 195 psid. Each pump is fitted with mechanical seals that do not require external means of cooling. The spray pumps each have a design flow rate equal to 100% of the heat removal capability necessary to maintain containment pressure below the design maximum. Both pumps start on a "P" signal (2/4 containment pressure transmitters /> 27 psig). The containment spray actuation signal can be reset by the operator by individual reset push buttons on the MCB for train A and train B. Local suction and discharge pressure indication is provided on each pump.

Periodic testing of the containment spray pumps may be accomplished by using the 2-inch recirculation line back to the RWST. FE-944 provides local indication of recirculation flow to the RWST. The recirculation line allows system testing without initiation of containment spray into containment.

High containment pressure is sensed by four detectors within the building. If 2/3 detectors sense greater that 4 psig, a safety injection signal is generated. The actions occurring as a result were covered previously.

Containment High-2 Pressure

If containment pressure increases to 16.2 psig on 2/3 containment pressure detectors, a main steam line isolation signal is generated. This signal is installed to isolate a leaking steam line and prevent further pressure increases in containment. Of course, if the source of the leak is upstream of the stop valves, the main steam line isolation signal will reduce the pressure increase only by isolating the other two SGs from discharging into containment.

Containment High-3 Pressure

The high-3 containment building pressure detection circuitry functions to actuate containment spray system. Spraying is necessary to prevent overpressurization of containment structure and subsequent building rupture. The high-3 pressure setpoint is 27 psig. An actual signal occurs when 2/4 detectors provided exceed their setpoints.

Low Pressurizer Pressure (Figure 20)

A steam break accident or a LOCA will cause a decrease in pressurizer pressure due to the outsurge of water to the reactor coolant system. The outsurge will be caused by either the water loss from the LOCA or the rapid cooldown produced by the steam break. Safety injection will be initiated by low pressurizer pressure of 1850 psig, as sensed by 2/3 pressure detectors.

The safety injection actuation signal can be blocked when pressurizer pressure is below 2000 psig (2/3, P-11) and two manual block switches are operated. The manual block feature is necessary to prevent safety injection actuation for deliberate cooldown and depressurization. Automatic unblocking occurs on increasing pressure when two of three channels exceed the P-11 setpoint.

the high-1 setpoint on 2/3 instruments, a safety injection occurs as indicated by the CTMT PRESS HI-1 RX TRIP SI alarm.

There are containment pressure indications on the MCB.

Containment Isolation Phase A (Figure 35)

A containment isolation phase A signal closes various valves in lines that penetrate containment. A safety injection or manual switch operation will cause containment isolation phase A. A containment phase A isolation will also cause a containment ventilation isolation.

There are two containment isolation phase A switches, one on the safeguards panel (PHASE A CTMT ISO ACTUATION) and the other on the reactor control panel (PHASE A CTMT ISO ACTUATION). On one of the safeguards panel are the PHASE A CTMT ISO RESET A(B) TRN push buttons that allow the containment isolation phase A signal to be cleared. Both push buttons must be depressed to clear the phase A signal. Valves that are shut by the phase A signal must be opened with their individual valve controls. MLB-2 has an indication for each component that receives a Phase A signal. When all lights on MLB-2 are lit, the operator can easily recognize that all equipment receiving a Phase A signal has responded properly.

Containment Isolation Phase B and Containment Spray (Figure 35)

A containment isolation phase B signal and a containment spray actuation signal are caused by 2/4 high-3 containment pressure. There are four protection bistable status lights on TSLB-1 that indicate the status of the high-3 containment pressure bistable. If a single bistable trips (pressure exceeds 27 psig), the CTMT PRESS HI-3 ALERT alarm energizes.

IF 2/4 containment pressure instruments exceed the setpoint, the CS ACTUATION (containment spray actuation) and CTMT ISO PH B (containment isolation phase B) alarms energize. MLB-3 has an indication for each component that receives a Phase B signal. When all MLB-3 lights are lit, the operator can easily recognize that each component that receives a Phase B signal has responded properly.

A containment isolation phase B and containment spray actuation can be manually initiated from the safeguards panel. There are four PHASE B CTMT ISO CS ACTUATION

Diversity--several different methods are used to perform similar functions or to indicate the same casualty. For example, reactor power is detected by excore nuclear instruments and by measuring the differential temperature across the reactor, which is proportional to reactor power for a constant flow. Diversity is provided in systems, equipment, interlocks, and trip features. It includes different kinds of trip protection for the same accident.

Fail-Safeness--the system is designed to provide the safest signal for a failure. Examples are: (1) loss-of-power to a trip bistable will supply a trip signal to the protection logics, and (2) loss-of-power to the rod control system will result in the control rods falling into the core. There is one counter example to the fail-safe criteria--containment spray actuation. The containment spray bistables must energize to actuate. This is necessary to preclude inadvertent spray actuation.

Testability--the RPS is capable of being calibrated or tested at power without loss-of-protection. Surveillance requirements in the Technical Specifications require that the system instrumentation channels and protection trains are to be tested at various time intervals.

Redundancy and Independence

Redundancy ensures that a single failure of an instrument channel will not prevent proper protection action when needed. The use of coincidence circuitry also ensures that the single failure of equipment will not result in a protective action when it is not warranted. The coincidence circuitry enhances the reliability of the reactor system to provide power.

The degree of coincidence required between channels (e.g., 2/3 (two out of three channels), 2/4, or 1/4, etc.) depends on what the channel provides: protection signals and/or control signals. If it monitors a non-safety grade component, a 1/2 or 2/3 coincidence logic may suffice. However, for a safety grade system or if a channel is used for both protection and control purposes, a 2/4 logic is generally required. The power range high flux reactor trip is an example of a 2/4 logic.

A 2/3 logic is allowed if no control action occurs from the protection channel, or a backup form of protection exists. The pressurizer high level is an example of a 2/3 coincidence logic. The pressurizer high level reactor trip is backed up by the high pressurizer pressure reactor trip.

5. A control board demultiplexer
6. A computer demultiplexer

Together, the hardware is referred to as the solid-state protection system (SSPS). All of the above equipment except the control board demultiplexer and the computer demultiplexer are divided between the two protection trains. Each SSPS cabinet (A train and B Train) houses the sub-cabinets necessary to receive the plant input, make subsequent logic decisions, and implement required safeguards output to provide reactor protection. These sub-cabinets are an input relay cabinet, a logic cabinet, and an output relay cabinet.

The following component description will only discuss train A. The other train is similar.

Input Relay Cabinet (Figures 4 and 11)

The input relay cabinet is the left-hand cabinet in each cabinet set, and serves as the interface between the protection train and incoming signals. These signals come from both nuclear process and plant process bistable outputs as well as from field contacts. This cabinet is provided with vital instrumentation power 120 volts alternating current (120V AC), which is routed to the logic cabinet to power direct current (DC) power supplies (see figures 12 & 13).

The input relay cabinet is divided into four compartments with each compartment serving one of four redundant RPS channels: I, II, III, or IV. Each compartment is isolated from the others by metal barriers and enclosed input wiring. The wireway for a particular compartment opens only into that compartment. Each compartment contains the fuses for its corresponding 120V AC instrument bus power.

The four input cabinet compartments each have front and rear doors, corresponding to the four instrument channels. A relay mounting plate divides the compartment into front and rear sections. Relay coil connections from the input wiring are made through terminal boards located on the walls of the front section. Wiring from the relay contacts to the solid-state logic is located in the rear section.

Bistables in the nuclear process and plant process cabinets sense unsafe conditions. The input relays will be electrically energized when their associated bistables sense that the process parameter being measured is within limits. A trip signal from the bistable, whether due to a variable exceeding its setpoint or the bistable inadvertently losing control power, will interrupt

input relay power (e.g., the pressurizer high pressure bistable turns off at 2385 psig; this action interrupts power to the input relay). (Note: Containment high-3 pressure is an exception. Its input relay energizes when an unsafe condition occurs. This reverse scheme is designed to eliminate containment spray actuation in the event of loss-of-instrument power. In this particular case, inadvertent spray actuation is considered more harmful than containment spray not actuating when required due to a loss of power to the input relays.) When relay power is interrupted, the input cabinet relay contacts close to signal an unsafe condition to the logic cabinets for the affected channel. The input relays provide isolation between trains since inputs are provided in parallel to both trains. The separate input compartments maintain isolation between the input channels.

Logic Cabinet (Figures 4 and 11)

The logic cabinet is to the right of the input relay cabinet. It houses the circuitry to make logic decisions. The logic circuitry receives signals from the input relay cabinet and if appropriate signals are received, it will initiate a reactor trip or actuate the ESF systems. In addition to logic decision making, information is collected, stored, and transmitted (via multiplexing techniques) to the computer and control board (via demultiplexing techniques).

The logic cabinet also has front and rear doors, which extend the height of the cabinet. It contains five card cages, a connector panel, two DC power supplies, a spray test panel, and a logic test panel.

A bracket protrudes through an opening in the front door of the logic cabinet. Mounted on this bracket are four bus lights, which are wired to indicate that AC power is applied to the input cabinet and logic cabinet compartments. For normal conditions, all four bus lights will be illuminated, indicating that all four instrumentation channels are receiving power.

The card cages use eight types of circuit cards. The majority of the circuit cards are universal logic cards used for actuation and trip decisions. The circuit cards are systematically located for trouble shooting and maintenance purposes. The eight types of cards used are the following:

1. Universal logic cards--used to perform all logic functions. Each card can perform several functions.

19. 013K4.03 001/2/1/MSLI/C/A 3.9/4.4/BANK/FA011005/RO/

Given the following:

- Unit 1 Reactor and turbine power is approximately 15% power during a startup.
- Tavg is 553°F.
- 1A SGFP is on service.
- The steam dumps are in the STM PRESS mode and in automatic.

The main steam header pressure transmitter, PT-464, fails high. Which one of the following will be a result of this failure?

Assume no operator action

A. SGFP speed decreases.

B. Main steam line isolation occurs.

C. Feed Regulating Valves go full open.

D. Steam dumps immediately go full closed.

A. Incorrect - SGFP speed will actually increase for this failure.

B. Correct - **Main steam line isolation occurs.**
Due to the temperature and power level, when the steam dumps go full open, which they would for this failure, with P-imp < 20%, the setpoint for Hi stm flow would be 40% steam flow, and the stm dumps are rated for 40% steam flow. Actual capacity of the FNP Steam dumps is closer to 50% than 40%. This would cause a MSLI signal with Tavg < 554°F.

C. Incorrect - PT-464 does not directly affect FRV position. However, the SGFPs speed would increase some and SGWL would start to rise. There would also be a swell in SG Level. These would cause the FRV to go in the close direction, not go full open.

D. Incorrect- The steam dumps would go full open in auto. Candidate may incorrectly believe the stm dumps are inversely proportional to PT-464 values.
This originally said the stm dumps will shift to manual and go to min value, but this correct when the temp reaches 543°F. The MSLI will also occur
A high steam flow and low-low T_{avg} exist concurrently. (The high steam flow signal occurs at 40% steam flow from 0% to 20% turbine load and is programmed to increase linearly to 110% as turbine load increases from 20 to 100% as sensed by 1/2 steam flow detectors in 2/3 steam lines. Low-low T_{avg} signal occurs when 2/3 primary loop temperature detectors indicate less than 543°F).

The low-low TAVG (P-12) block actuates when 2/3 TAVG instruments indicate below 543°F. A LO-LO TAVG SAFETY INJ STEAM DUMP INTLK P-12 status light, located on the MCB, represents the P-12 actuation.

Secondly, if the low-low TAVG signal (P-12) exists and the BYP INTLK position on both A and B Train STEAM DUMP INTERLOCK SWITCHES has not been selected, PK-464 will shift to manual control. By shifting to manual control, the output of the P+I portion of the controller is set to zero and thus prevents small pressure errors from being integrated into large controller output signals.

013K4.03 Knowledge of ESFAS design feature(s) and/or interlock(s) which provide for the following: Main Steam Isolation Signal

Explain the purpose and operation including the design features and functions, capacities, and protective interlocks of the following major components associated with the Steam Generator Protection System (OPS52201K02):
• Safety Injections
• Main Steam Line Isolations

Predict and explain the following instrument/equipment response expected when performing Steam Generator Water Level Control System evolutions including the fail condition, alarms, trip setpoints (OPS52201B08).
• Steam Flow
• Steam Pressure
• Steam Header Pressure

Predict and explain the following instrument/equipment response expected when performing Steam Dump evolutions including fail condition, alarms and trip setpoints. (OPS52201G08)
• PT-446
• PT-447
• PT-464

RX PROT-52201I07 #4

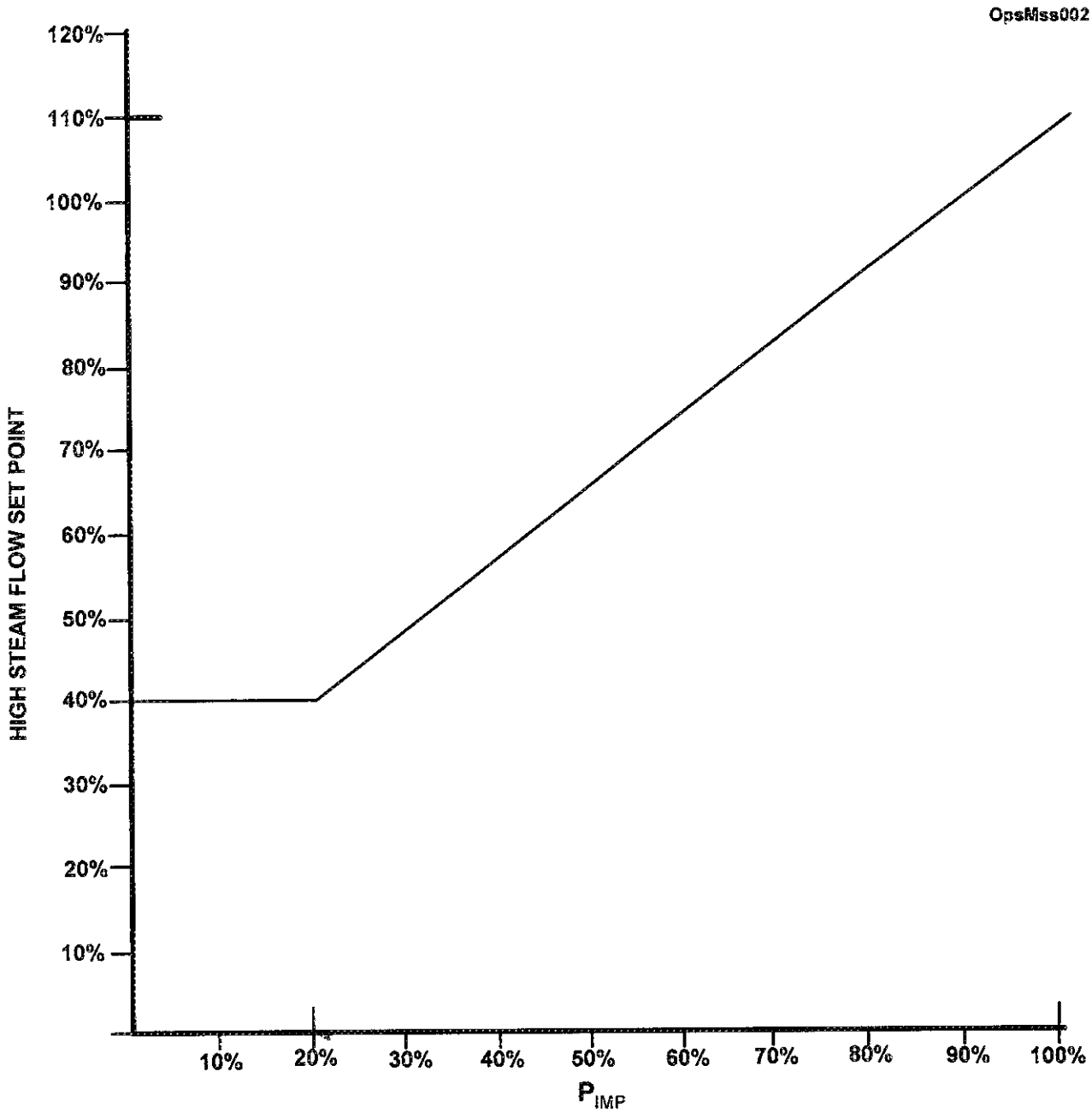

High Steam Flow Set Point for MSLIAS

Figure 5

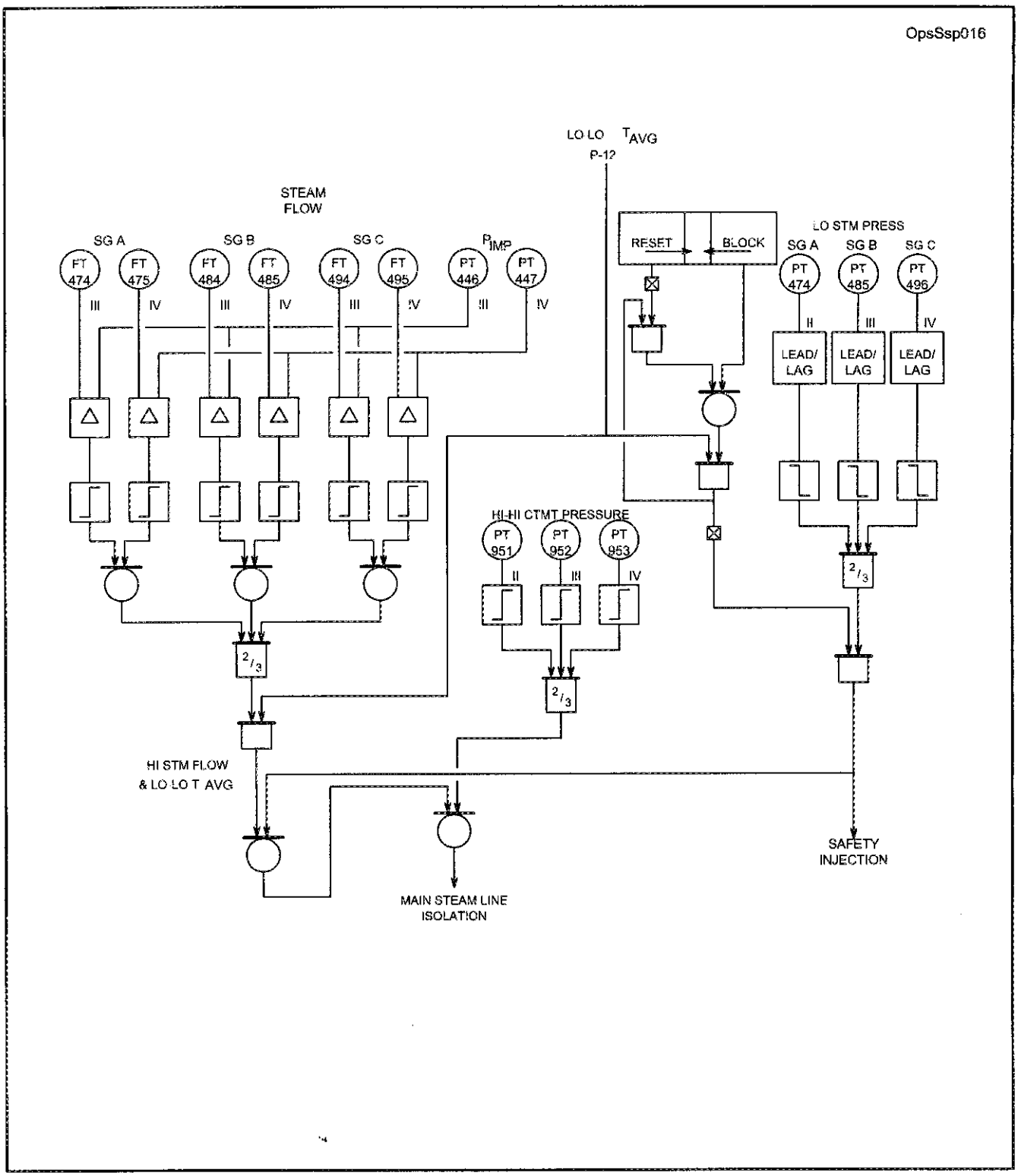

Steam Flow and Pressure Protection

Figure 3

that of the main feedwater regulating valve control. Valve position indication lights are located below each M/A station.

Operational Dynamics

The major control element in the bypass control system is the bypass flow controller. The same convention applies to input signal designations as established in the main flow control circuit.

Feed Pump Speed Control (Figures 12 and 13)

ΔP Program

A summing amplifier in the feed pump control system sums the compensated steam flow signals from each flow loop. Using a combination of gain and lower limit settings, the amplifier generates an output that is a function of total steam flow. The gain of the summing amplifier is 0.4. A lag function delays the ΔP program signal by 120 seconds to compensate for system dynamic effect and process noise. The output, which is sent to the master speed controller, is the voltage equivalent of the programmed feedwater/main steam ΔP. The lower limit is the no-load ΔP of 50 psi (43 psi-Unit II). This no-load ΔP setpoint ensures flow into the steam generators from the feed system. The ΔP program follows linearly from 28.1-percent to 100-percent (9.4 to 100%-Unit II) power (steam flow). The ΔP is 50 to 177.14 psi (43 to 182 psi-Unit II), respectively.

Actual ΔP

The steam header pressure (PT-464) downstream of the main steam isolation valves (MSIVs) and the feed pump common discharge header pressure (PT-508) provide inputs to a differential amplifier. This amplifier produces an output proportional to the main feed pressure minus main steam pressure. This amplifier signal provides an actual ΔP input to the master speed controller. (The actual ΔP signal is processed such that if the differential amplifier fails low, the master speed controller will still have a signal from the ΔP program to maintain feedwater pump speed.)

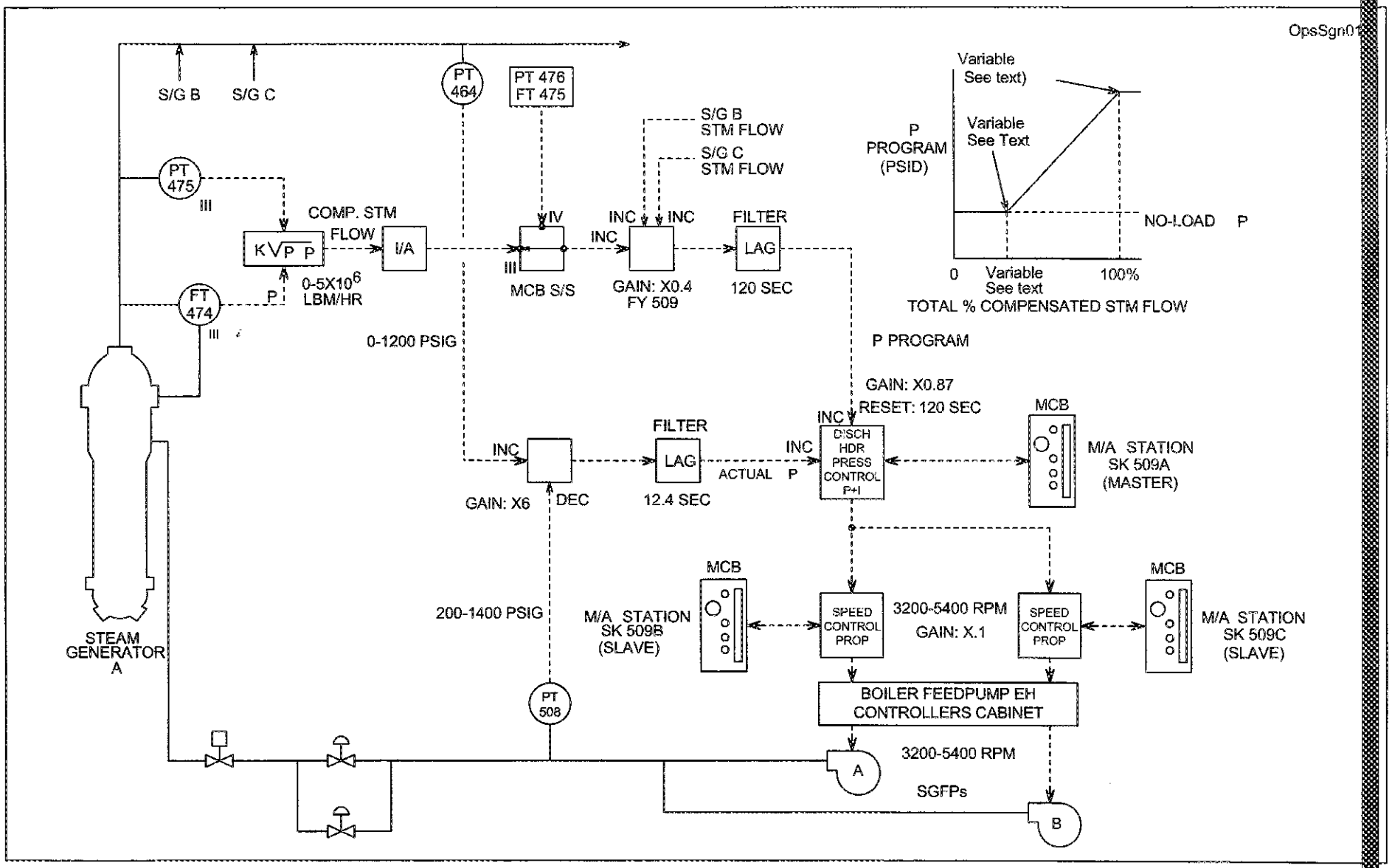

Steam Generator Water Level Control
Feed Pump Speed Control

Figure 12

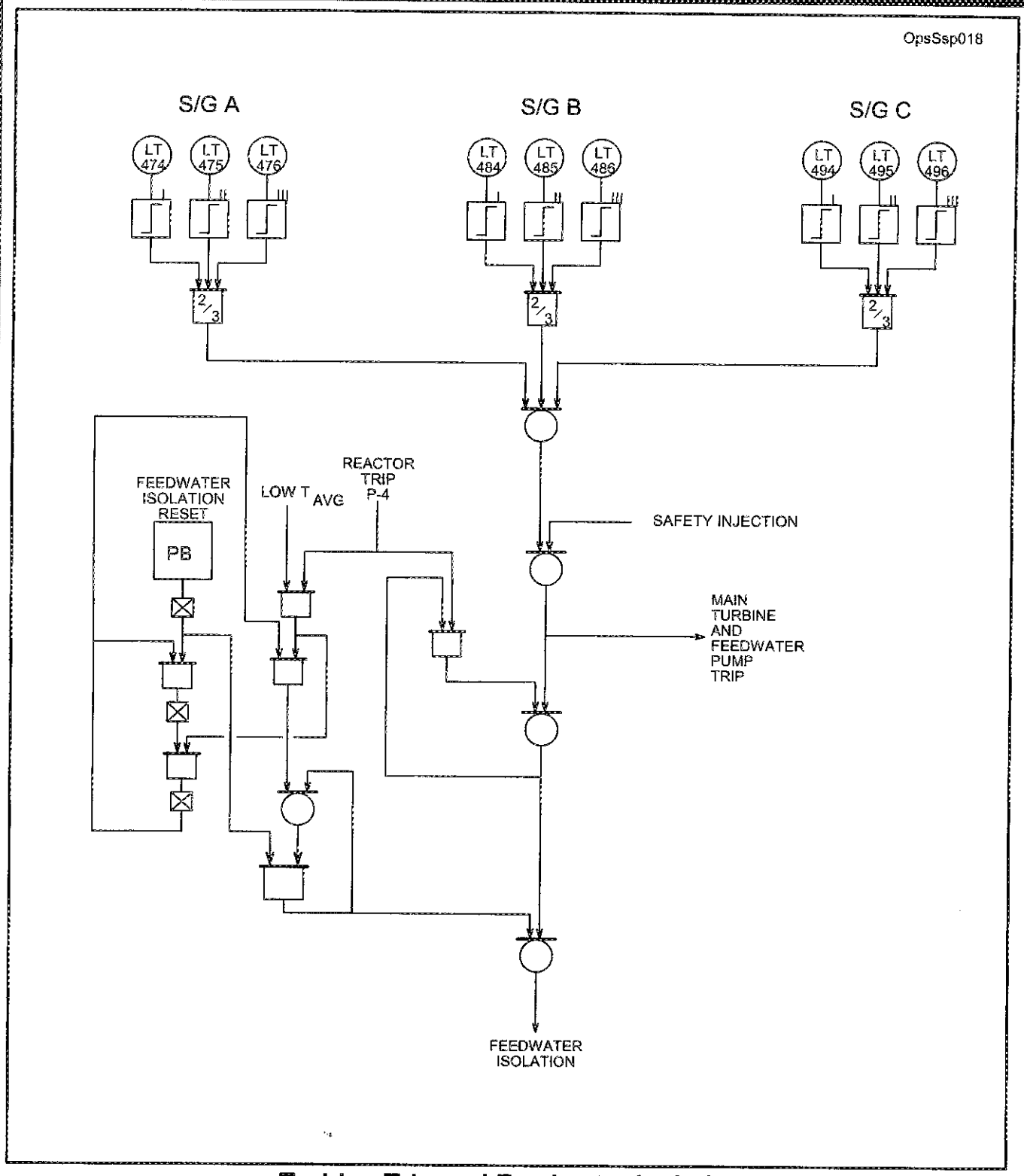

Turbine Trip and Feedwater Isolation

Figure 7

II. The following are symptoms of a reactor trip:

a. Any reactor trip annunciator lit.

b. Rapid decrease in neutron level indicated by nuclear instrumentation.

c. All shutdown and control rods are fully inserted. Rod bottom lights are lit.

III. The following are symptoms that require safety injection, if one has not occurred:

SI Signal	Instrumentation (TSLB)	Setpoint	Coincidence
1. Pressurizer pressure low (If not blocked)	PI-455,456,457 (TSLB2 17-1,17-2,17-3)	1850 psig	2/3
2. Steam Line Differential pressure	PI-474,484,494, PI-475,485,495, PI-476,486,496 (TSLB4 10-2,10-3,10-4, 11-2,11-3,11-4, 12-2,12-3,12-4, 13-2,13-3,13-4, 14-2,14-3,14-4, 15-2,15-3,15-4)	100 psid	1 steam line 100 psig less than other two on 2/3 protection sets
3. Low Steam Line pressure (If not blocked)	PI-474,485,496 (TSLB4 19-2,19-3,19-4)	585 psig (rate compensated)	2/3
4. Containment pressure high	PI-951,952,953 (TSLB1 1-2,1-3,1-4)	4 psig	2/3
5. Manual	N/A	N/A	1/2

IV. The following are symptoms of a safety injection:

a. Any SI annunciator lit.

b. BYP & PERMISSIVE SAFETY INJECTION ACTUATED status light lit

c. MLB-1 1-1 or MLB-1 11-1 lit

d. HHSI flow greater than 0 gpm.

B. **Symptoms**

1. The following are symptoms that require a reactor trip, if one has not occurred:

Reactor Trip	Instrumentation (TSLB)	Setpoint	Coincidence
1. Source Range High Flux (If not blocked)	NI-31,32 (TSLB3 1-1,1-2)	10^5 cps	1/2
2. Intermediate Range High Flux (If not blocked)	NI-35,36 (TSLB3 2-1,2-2)	Reference Surveillance Test Data Book for current S.P.	1/2
3. Power Range High Flux, Low Setpoint (If not blocked)	NI-41,42,43,44 (TSLB3 6-1,6-2,6-3,6-4)	25% Rx Pwr	2/4
4. Power Range High Flux, High Setpoint	NI-41,42,43,44 (TSLB2 11-1,11-2,11-3, 11-4)	109% Rx Pwr	2/4
5. Power Range High Positive Flux Rate	NI Cabinets (TSLB2 12-1,12-2,12-3, 12-4)	+5%/2 sec.	2/4
6. Power Range High Negative Flux Rate	NI Cabinets (TSLB2 12-1,12-2,12-3, 12-4)	-5%/2 sec.	2/4
7. OTΔT	TI-412C,422C,432C (TSLB2 7-1,7-2,7-3)	+credits 117% -penalties	2/3
8. OPΔT	TI-412B,422B,432B (TSLB2 8-1,8-2,8-3)	110%-penalties	2/3
9. Pressurizer Low Pressure	PI-455,456,457 (TSLB2 19-1,19-2,19-3)	1865 psig (rate compensated)	2/3 (Rx Pwr > 10%)
10. Pressurizer High Pressure	PI-455,456,457 (TSLB2 20-1,20-2,20-3)	2385 psig	2/3

Reactor Trip	Instrumentation (TSLB)	Setpoint	Coincidence
11. Pressurizer High Water Level	LI-459A,460,461 (TSLB2 18-1,18-2,18-3	92%	2/3 (RX Pwr >10%)
12. Low Reactor Coolant Flow	FI-414,415,416 FI-424,425,426 FI-434,435,436 (TSLB2 4-1,4-2,4-3, 5-1,5-2,5-3, 6-1,6-2,6-3)	90%	2/3 per loop on 1/3 loops (Rx Pwr > 30%) 2/3 per loop on 2/3 loops (30% > Rx Pwr > 10%)
13. RCP Breakers Open	Breaker Contacts (TSLB2 3-1,3-2,3-3)	Contacts Open	1/3 loops (Rx Pwr > 30%) 2/3 loops (30% > Rx Pwr > 10%)
14. RCP Bus Undervoltage	BUS Undervoltage Relays (TSLB2 1-1,1-2,1-3)	2680 V (0.6 sec time delay)	1/2 detectors on 2/3 Busses (Rx Pwr > 10%)
15. RCP Bus Underfrequency	BUS Underfrequency Relays (TSLB2 2-1,2-2,2-3)	57 Hz (0.3 sec . time delay)	1/2 detectors on 2/3 Busses (Rx Pwr > 10%)
16. Low Low SG Water Level	LI-474,475,476 LI-484,485,486 LI-494,495,496 (TSLB4 4-1,4-2,4-3, 5-1,5-2,5-3, 6-1,6-2,6-3)	28%	2/3 Detectors on 1/3 SGs
17. Turbine Trip	DEHC (TSLB2 13-1,13-2,13-3, 14-1,14-2,14-3, 14-4)	Low Auto Stop Oil at 45 psig or Throttle Valves Closed	2/3 for Auto Stop Oil or 4/4 Throttle Valves Closed (Rx Pwr > 35%)
18. SI	N/A	Any SI Signal	1/2 Trains
19. General Warning	N/A	N/A	2/2 Trains
20. Manual	N/A	N/A	1/2

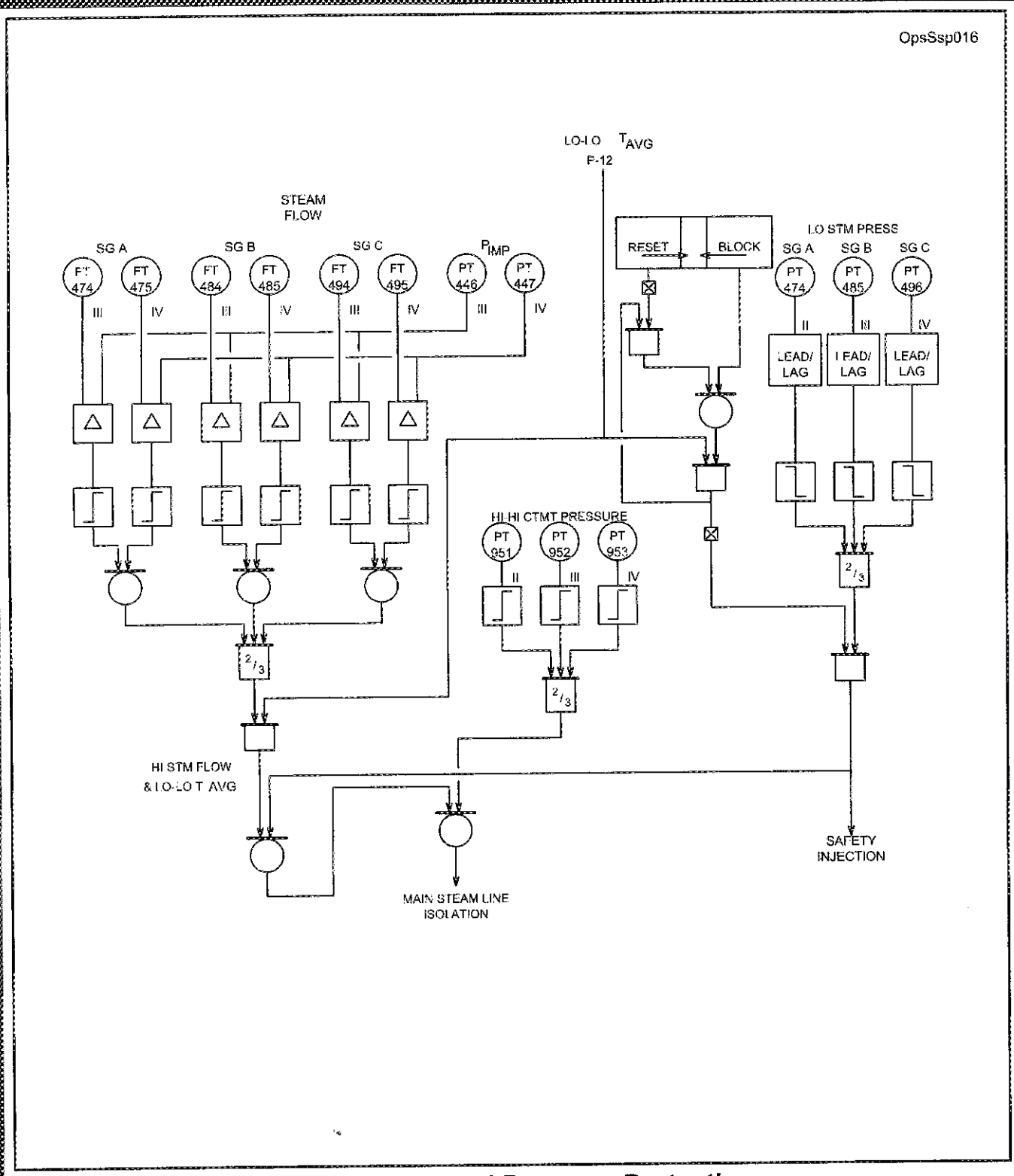

Steam Flow and Pressure Protection

Figure 3

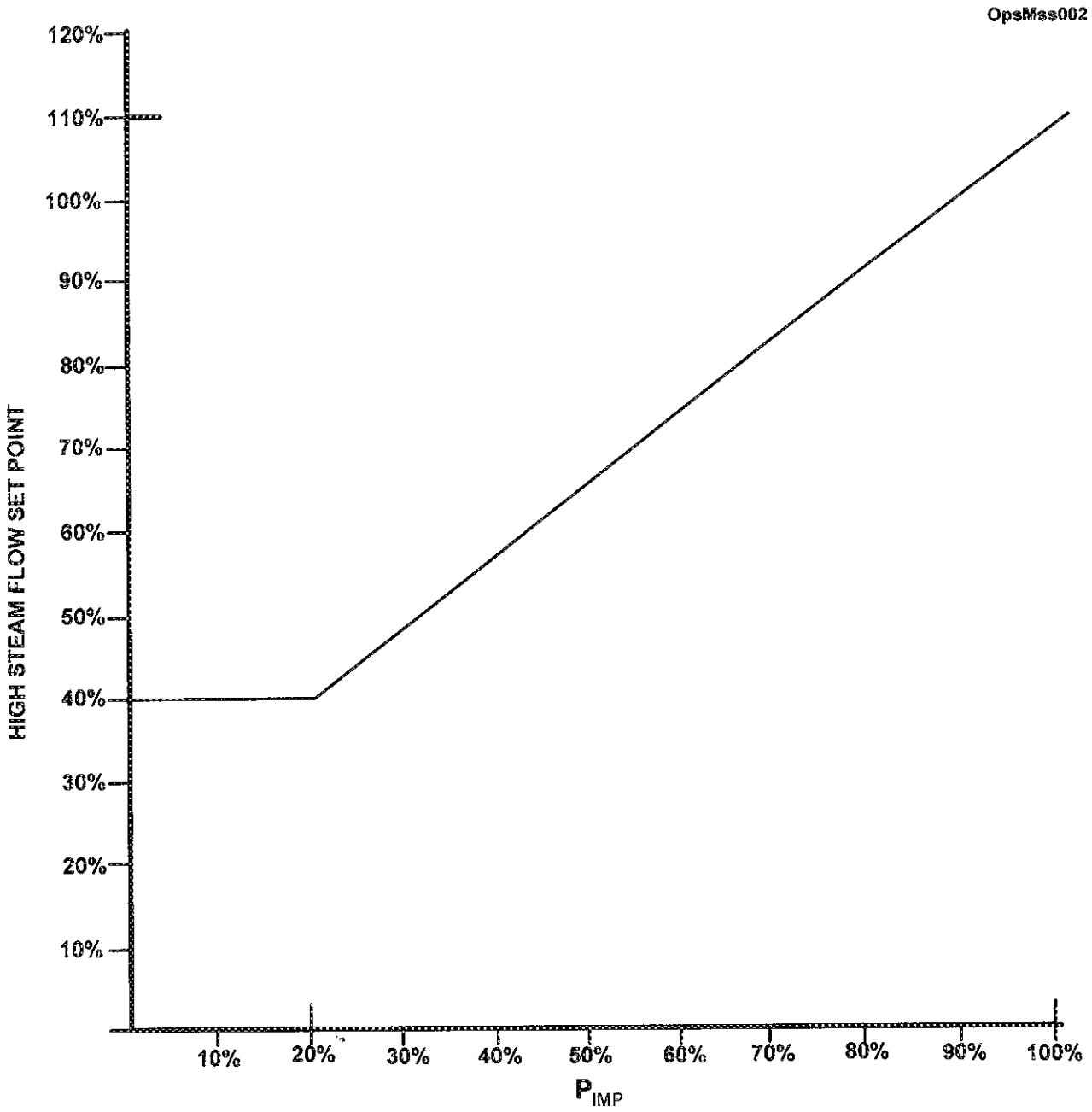

High Steam Flow Set Point for MSLIAS

Figure 5

High Steam Line Flow Main Steam Line Isolation

Refer to Figure 3 and 5. A higher than expected steam flow from the steam generators, along with a decreasing T_{avg}, is another indication of a steam break that will shut the MSIVs.

The high steam flow set point is varied with turbine power by P_{imp}. The set point is 40 percent steam flow from 0 percent to 20 percent turbine power. It then increases linearly from 20 percent turbine power to 100 percent turbine power where the set point is 110 percent steam flow.

2/3 steam lines reaching the set point and T_{avg} below the P-12 set point will shut the MSIVs. It requires only one of the two, density-compensated steam flow detectors per steam line to reach the set point to actuate the MSIV closure with a one second time delay. This main steam line isolation is not able to be blocked or bypassed.

Hi-Hi Containment Pressure Main Steam Line Isolation

A main steam line rupture inside the containment will increase the containment pressure. When 2/3 containment pressure detectors reach the Hi-Hi set point (16.2 psig), a main steam line isolation will be actuated with a one second time delay.

Reactor Trips

The reactor trips discussed in the lesson will only be those associated with steam generator level. A loss-of-level in a steam generator would remove that steam generator's capability to act as a heat sink for the reactor.

Lo-Lo Steam Generator Level Reactor Trip

Refer to Figure 6. Three narrow range level detectors provide the input for the reactor trip. The level set point has been set at 28 percent. When 2/3 level detectors in any one steam generator fall below the set point, a reactor trip will occur.

In addition to causing a reactor trip, 2/3 levels below the reactor trip set point in 1/3 steam generators will also start both motor-driven auxiliary feedwater pumps. In the event 2/3 steam generators fall below the set point, the turbine-driven auxiliary feedwater pump will also start. For further details of the Auxiliary Feedwater System operation, see the Auxiliary Feedwater lesson.

Turbine Trip and Main Feedwater Isolation

Refer to Figure 7. If the level in the steam generator becomes excessively high, the moisture separator will become flooded. When the moisture separators become flooded, they lose their moisture separating capabilities, allowing water droplets to be entrained with the steam. Water droplets entrained in the high velocity steam will impinge on the turbine blading, damaging the blading. This will require main turbine and SGFP turbine trips to protect the turbines.

In addition to tripping the main turbine and SGFP turbines, a main feedwater isolation (close Feedwater Regulation Valves and Associated Bypass Valves) should also occur to prevent continuing to overfeed the steam generators.

A safety injection signal would also result in feedwater isolation and tripping of the main feedwater pumps.

Three narrow range steam generator level detectors per steam generator provide the input to this turbine trip. Two level indications at the high level set point of 82% in any one steam generator will actuate the turbine trip and feedwater isolation. The signal that causes the turbine trip and feedwater isolation is referred to as permissive signal P-14.

When steam generator level drops back below the P-14 setpoint, the FW isolation signal will automatically reset unless a reactor trip (P-4) has occurred. This reset will allow starting the MFPs and feeding the steam generators. If the reactor trip breakers are opened when steam generator level is above P-14 setpoint, the feedwater isolation is sealed in and cannot be reset until closing the reactor trip breakers, which will automatically reset it. The feedwater isolation signal on SI is also sealed in by P-4 and is reset when reactor trip breakers are shut with the SI signal cleared.

It is important to realize that P-14 does not directly cause a reactor trip. A turbine trip occurring at greater than the P-9 set point (35% nuclear power) will cause a reactor trip.

Low T_{avg} Feedwater Isolation

Following a reactor trip, the plant will cool down. Too much cooldown, however, would cause control problems. An excessive amount of feed flow following a reactor trip could cause an excessive cooldown.

After a reactor trip, the P-4 signal, in coincidence with the low T_{avg} (554° 2/3), will cause a feedwater isolation. The feedwater isolation occurs prior to the no load T_{avg} of 547°F to help ensure T_{avg} will not drop below 547°F.

The feedwater isolation can be reset on the main control board (MCB) using two reset push buttons, one for train A and one for train B. This circuit uses a retentive memory. Therefore, the feedwater isolation signal from low T_{avg} and P-4 can be reset with the actuation signal still present.

AMSAC System

Refer to Figure 8. The AMSAC system provides a back-up to the reactor trip system (RTS) and ESF actuation system (ESFAS) for initiating turbine trip and auxiliary feedwater flow in the event of an anticipated transient (e.g., in the complete loss of main feedwater).

The AMSAC continuously monitors level in the steam generators, which is an anticipatory indication of a loss of heat sink, and initiates certain functions when the level drops below a predetermined setpoint for at least a preselected time and for two of the three steam generator levels. These initiated functions are the tripping of the turbine, the initiation of auxiliary feedwater, and isolation of the steam generator blowdown and sample lines.

AMSAC utilizes the signals from LI-474, LI-485, and LI-496 for steam generator level in steam generators A, B, and C, respectively. AMSAC also utilizes PT-2446 and PT-2447 for P_{imp} input.

AMSAC will trip the main turbine and start MDAFW and turbine-driven AFW for the following conditions:

Turbine load > 40% with a 2/2 coincidence and a 260 second time delay to drop out (C-20)

and

Steam generator level < 10% in 2/3 steam generators with a 25 sec. time delay to pick-up.

OPERATIONS

Instrumentation and Control

The instrumentation and control for the steam generators has been divided into four protection sets. All instruments that deal with any type of protection have been included within a

Containment Hi-Hi Pressure Main Steam Line Isolation

Refer to Figure 3. Containment pressure detectors PT-951, 952, and 953 provide the input to isolate the main steam lines at 16.2 psig inside the containment. 2/3 protection sets are required to actuate the MSLIAS. This MSLIAS cannot be blocked or bypassed.

High Steam Flow Main Steam Line Isolation

Refer to Figure 3 and 5 and Table 1. Steam flow transmitters 474, 484, and 494 and turbine impulse pressure (P_{imp}) transmitter 446 form protection set III for steam generators A, B, and C respectively. Steam flow transmitters 475, 485, and 495 and P_{imp} transmitters 447 form protection set IV for steam generators A, B, and C, respectively. P_{imp} feeds differential amplifiers for all three steam generators to establish the power level the plant is at and therefore, the amount of steam flow that should exist. Figure 6 illustrates the variable set point, which is 40 percent steam flow from 0 percent to 20 percent. From 20 percent power to 100 percent power, the set point varies linearly from 40 percent steam flow to 110 percent steam flow. One out of two protection sets on 2/3 steam generators provide one of the required inputs to cause a MSLIAS. The second required input comes from lo-lo T_{avg} (P-12) at 543°F. This MSLIAS is not blockable and has a one second time delay.

Reactor Trips

Steam Generator Lo-Lo Level Reactor Trip

Refer to Figure 6 and Table 1. Each steam generator has three protection oriented level transmitters, one each from protection sets I, II, and III. Protection set I includes LT-474, LT-484, and LT-494. Protection set II includes LT-475, LT-485, and LT-495. Protection set III includes LT-476, LT-486, and LT-496. 2/3 protection sets at less than or equal to 28 percent steam generator level on 1/3 steam generators will actuate a reactor trip and start the motor-driven auxiliary feedwater (MDAFW) pumps. 2/3 protection sets at less than or equal to 28 percent steam generator level on 2/3 steam generators will start the turbine-driven auxiliary feedwater (TDAFW) pump.

20. 014A4.04 001/2/2/RPI/MEM 2.7/2.7/NEW/FA011005/RO/

Unit 2 is starting up the reactor after a reactor trip. DRPI shows all rods on the bottom and the step counters show the At Power rod positions prior to the reactor trip.

IAW UOP-1.3, Startup of Unit following an At Power Reactor Trip, the ROD CONTROL STARTUP RESET switch on the MCB is taken to the RESET position. Which one of the following will result from this action?

A. The Bank Overlap Unit will indicate zero.

B. FF3, DRPI Urgent Failure, annunciator will come into alarm.

C. FF1, Rod Cont Urgent Failure, annunciator will come into alarm.

D. Rod Insertion Limit computer will generate a rod position Lo and Lo-Lo alarm.

A. Correct - **The Bank Overlap Unit will indicate zero.**
This is one of six actions that occur when the ROD CONTROL STARTUP RESET switch on the MCB is taken to the RESET position.

B. Incorrect - This alarm could be confused with the Rod Cont Urgent Failure annunciator.

C. Incorrect - This alarm will clear, not come in to alarm, if in alarm and the condition corrected when the ROD CONTROL STARTUP RESET switch is taken to the RESET position.

D. Incorrect - This is a correct answer if the ROD CONTROL STARTUP RESET switch on the MCB is taken to the RESET position while at 100% power.

Prior to doing a reactor startup, all counters should be set to zero, and any urgent failures should be cleared. The rod control startup reset switch on the MCB performs the following six functions:
1. Resets the step counters on MCB to zero.
2. Resets the master cycler 0-5 counter to zero (This will ensure correct group action.)
3. Resets the slave cyclers 0-127 counters to zero (This will ensure correct sequence of a step.)
4. Resets the bank overlap unit 0-999 counter to zero (This will ensure correct bank overlap.)
5. Resets all urgent failure alarms if the conditions have been corrected.
6. Resets the pulse-to-analog convertors in the rod position indication system to zero (This will ensure correct insertion limit surveillance.)

014A4.04 Ability to manually operate and/or monitor in the control room:
Re-zeroing of rod position prior to startup

Explain the purpose and operation including the design features and functions, capacities,
and protective interlocks of the following major component associated with the Rod Control System (OPS40204I02):
•Rod Control Startup Reset Switch

the condition is cleared, the urgent failure can be cleared by depressing the rod control alarm reset push button on the MCB, or by locally resetting the urgent failure alarm at the logic or power cabinets. Rod Control Startup Reset Switch

Prior to doing a reactor startup, all counters should be set to zero, and any urgent failures should be cleared. The rod control startup reset switch on the MCB performs the following six functions:

1. Resets the step counters on MCB to zero.
2. Resets the master cycler 0-5 counter to zero (This will ensure correct group action.)
3. Resets the slave cyclers 0-127 counters to zero (This will ensure correct sequence of a step.)
4. Resets the bank overlap unit 0-999 counter to zero (This will ensure correct bank overlap.)
5. Resets all urgent failure alarms if the conditions have been corrected.
6. Resets the pulse-to-analog convertors in the rod position indication system to zero (This will ensure correct insertion limit surveillance.)

The rod control startup reset switch should not be used unless all rods are on the bottom.

Power Cabinet Non-Urgent Failure

A power cabinet non-urgent failure will be caused by a loss of any one of four DC power supply modules in the power cabinet (main and auxiliary, +24 and -24V DC). This may be due to low line voltage, a blown fuse, or failure of the module's AC supply. If only one of each redundant pair fails, the other will continue supplying the cabinet's DC circuits through a blocking diode arrangement. The non-urgent failure does not affect rod motion.

A power cabinet non-urgent failure will annunciate the ROD CONTROL NON-URGENT FAILURE alarm on the MCB. The alarm will automatically clear when the non-urgent failure clears.

For Unit 2 only, the +24V DC power supplies have status lights on the front of the power cabinets (PS1 and PS2). These status lights must be checked within one hour of receiving the ROD CONTROL NON-URGENT FAILURE alarm. If both status lights are not lit, then at least one +24V DC power supply must be reset within one hour or rod drops may occur due to a depleted backup battery.

NOTE: WHEN the reactor is critical, the low low Tavg Alarm shall be verified reset (RX COOLANT LOOPS 1A, 1B or 1C TAVG LO-LO annunciator HF4) AND all RCS Loop Tavg shall be verified greater than or equal to 547°F, OR each reactor coolant loop Tavg shall be verified greater than or equal to 541°F every 30 minutes per FNP-1-STP-35.1, UNIT STARTUP TECHNICAL SPECIFICATION VERIFICATION. (Technical Specification 3.4.2)

3.27 On FNP-1-STP-35.1, UNIT STARTUP TECHNICAL SPECIFICATION VERIFICATION, record time of criticality, the temperature of last observed lowest reading Tavg prior to criticality and the time of the observation

3.28 Smoothed SUR is useful in anticipating the trend in reactor power and RCS TAVG especially when there is a positive moderator temperature coefficient. The expected moderator temperature coefficient can be obtained by referring to Curve 5. It is important to remember that while using smoothed SUR to anticipate trends, the actual parameters to be controlled are reactor power level and RCS average temperature. Appropriate response to control temperature must be taken even if smoothed SUR does not show a change. **{CMT 0009899}**

3.29 Correct operation of the SGFP speed control system is very important for proper steam generator water level control system operation. Ensure feed header to steam header ΔP is being maintained at the correct program value. **{CMT 0009899}**

NOTE: •TAVG changes affect NI indicated power but do not affect ΔT indicated power. Consider TAVG value when comparing NI and ΔT indications. (IR 1-94-118)

•Thermal streaming should simultaneously affect all three ΔT loops in a similar way -- if only a single loop ΔT deviates from calorimetric power or is markedly different from the other loops, an instrumentation problem may be indicated.

3.30 WHEN reactor power is in the power range, THEN compare reactor power indications and check for agreement. Continue monitoring and checking for agreement during the subsequent reactor power ascension. (IR 1-94-118)

- Average of RCS ΔTs
- Average of Power Range NIs
- AFW flow requirements (rough estimate of power level)
- Steam dump or S/G Atmospheric relief valve demand (rough estimate of power level)

3.30.1 IF any power disagreement greater than 2% is indicated, THEN resolve the discrepancy prior to power ascension.

3.31 Resetting the ROD CONTROL STARTUP RESET switch resets the following: Bank Overlap Unit, Master Cycler, Slave Cyclers, Pulse-to-analog converters, Urgent Failure Alarms, and Step Counters.

NOTE:
- **All surveillance reviews, whether it is for the nightly review or for a Mode change, should be performed in an environment free from distractions. It is the responsibility of the person performing the review, and the person performing the verification to establish such an environment (including moving to an empty office if necessary) before commencing the task, and to ensure they are not distracted from the task. (IR 1-95-297)**
- **It is intended that the following step be completed within a reasonable time frame, however, it is not meant to be a stopping point until it is completed. The operating crew should perform this step in parallel with the remainder of this procedure.**

____ / SSS ____ / SSS 5.6.5 Verify a Weekly STP Schedule list of Operations STPs required for Modes 3, 2 and 1 exists. IF required, THEN review the Operations Surveillance Schedules and prepare a Weekly STP Schedule list of Operations STPs required for Modes 3, 2 and 1 for the next 7 day period. Following verification, provide this list to the Shift Supervisor.

____ / 5.6.6 Ensure that no MODE 2 LCOs exist.

____ / *5.7 IF reactor decay heat diminishes to the point where gland seal can NOT be maintained, THEN place auxiliary steam on Unit 2 per FNP-1-SOP-55.1, AUXILIARY STEAM AND CONDENSATE SYSTEM, and gland seal on auxiliary steam per FNP-1-SOP-28.4, GLAND SEALING STEAM SYSTEM. IF necessary, THEN place a hogger in operation, FNP-1-SOP-28.5, CONDENSER AIR REMOVAL SYSTEM.

NOTE: IF less than 2 reactor coolant pumps are running in Mode 3, THEN the rod control system shall be disabled for rod withdrawal.

5.8 WHEN all reactor trip conditions have cleared, THEN perform the following:

____ / 5.8.1 Verify reactor trip breakers closed.

____ / 5.8.2 Reset Rod Control Start-up Reset switch.

____ / 5.8.3 Verify Bank Overlap Unit is reset to 0.

____ / 5.8.4 Withdraw shutdown banks A and B.

21. 015K2.01 001/2/2/NIS/C/A 3.3/3.7/MOD/FA011005/RO/

Given the following conditions:

- A Unit 1 Reactor Startup is in progress.
- The startup is on hold due to a problem with SR N-31.
- SR N-32 indicates 1000 cps.
- SR N-31 LEVEL TRIP switch is in the BYPASS position.
- 1A inverter has been placed on the alternate source.

DF01, 1A S/U transformer to 1F 4160V bus, has tripped open. Which one of the following is correct **after** the associated Diesel Generator ties on 1F 4160V bus?

A. The reactor trip breakers will be open and N-31, N-35 and N-41 will be de-energized.

B. The reactor trip breakers will be open and N-31, N-35 and N-41 will be energized.

C. The reactor trip breakers will be closed and N-31, N-35 and N-41 will be energized.

D. The reactor trip breakers will be closed and N-31, N-35 and N-41 will be de-energized.

A. Incorrect - There will be a Rx trip, however the NIs will be powered up after the DG ties on.

B. **The reactor trip breakers will be open and N-31, N-35 and N-41 will be energized.**
Due to the inverter being on the the alternate source, the power comes from 1F 4160V bus. When the bus is de-energized, 1A Vital panel will be de-energized and power is lost to SR N-31. Even though the level trip BYPASS SW is in BYPASS, control power is lost and trips the HI flux SR B/S anyway. A Rx trip is generated. Then when the DG ties on and energizes the bus, 1A Vital panel will now have power again and all Nis will be energized.

C. Incorrect - The Rx trip breakers will be open.

D. Incorrect - The Rx trip breakers will be open and all Nis will be energized.

Possible symptoms/indications of a source range (SR) channel failure include,
SR LOSS OF DET VOLTAGE annunciator (FA3)
The control power fuses supply control power for drawer.
Below the P-6 set point (1/2 intermediate range [IR] channels > 10-10 amps), a reactor trip signal would be generated if either SR channel exceeded 105 cps as a result of the failure.

ARP-1.6 (In Part)
A3 SR LOSS OF DET VOLTAGE
PROBABLE CAUSE
1. During Startup or Shutdown below P-6;
   a) Loss of 118 VAC Instrument Power
   b) Loss of 118 VAC Control Power
   c) High Voltage Power Supply malfunction
2. During Power Operation above P-6, this alarm will normally be on as a result of manually blocking the Source Range Level Trip from the MCB until power level exceeds the P-10 setpoint above which this alarm is disabled.
3. During power reduction, this alarm should come in when P-10 clears.
AUTOMATIC ACTION
NOTE: This trip will normally be manually blocked after Permissive P-6 is satisfied.
IF a malfunction causes a Source Range trip setpoint to be reached on one out of two detectors, THEN a reactor trip will occur.

015K2.01 Knowledge of bus power supplies to the following:
NIS channels, components and interconnections.

Identify the power supply for each major electrical component associated with the Excore Nuclear Instrumentation System including (OPS52201D04):
· Power Range Channels
· Intermediate Range Channels
· Source Range Channels

Predict and explain the following instrument/equipment response expected when performing Excore Nuclear Instrumentation System evolutions including the fail condition, alarms, and trip set points (OPS52201D08).
·Source Range Channels

modified from EXCORE-52201D08 #35

original question

QUESTIONS REPORT

for 015k2.01 Questions

EXCORE-52201D08 035/ILT//M (LEVEL 1) PROC/015K2.01////

Given the following conditions:

-Reactor Startup in progress
-Startup is on hold due to problem with SR N-31
-SR N-32 indicates 1000 cps
-SR N-31 is in bypass

Which ONE of the following will occur if the control power fuse for SR N-31 blows?

A. Reactor will trip.

B. Rod withdrawal is blocked.

C. Both SR drawers deenergize.

D. Indication lost for SR NI-31 on MCB and NIS cabinets.

TABLE 1
POWER SUPPLIES

LOAD	SUPPLY	EMERGENCY DIESEL GENERATOR	Transformer	
			Normal	Alternate
NIS Channel 1 N41 N35 N31	120V AC Vital Inst Panel A	A Train	S/U A	S/U B
NIS Reg Cab A (outlets)	120V AC Vital Inst Panel A	A Train	S/U A	S/U B
NIS Channel 2 N42 N36 N32	120V AC Vital Inst Panel B	A Train	S/U A	S/U B
NIS Reg Cab B (outlets) N43	120V AC Vital Inst Panel B	A Train	S/U A	S/U B
NIS Channel 3 N43	120V AC Vital Inst Panel C	B Train	S/U B	S/U A
NIS Reg Cab C Outlets	120V AC Vital Inst Panel C	B Train	S/U B	S/U A
NIS Channel 4 N44 Misc Drawer Audio Count Rate Comp & Rate Drawer	120V AC Vital Inst Panel D	B Train	S/U B	S/U A
NIS Reg Cab D Outlets	120V AC Vital Inst Panel D	B Train	S/U B	S/U A
Gamma-Metrics Neutron Flux Monitor	120V AC Dist Panel J	A Train	S/U A	S/U B

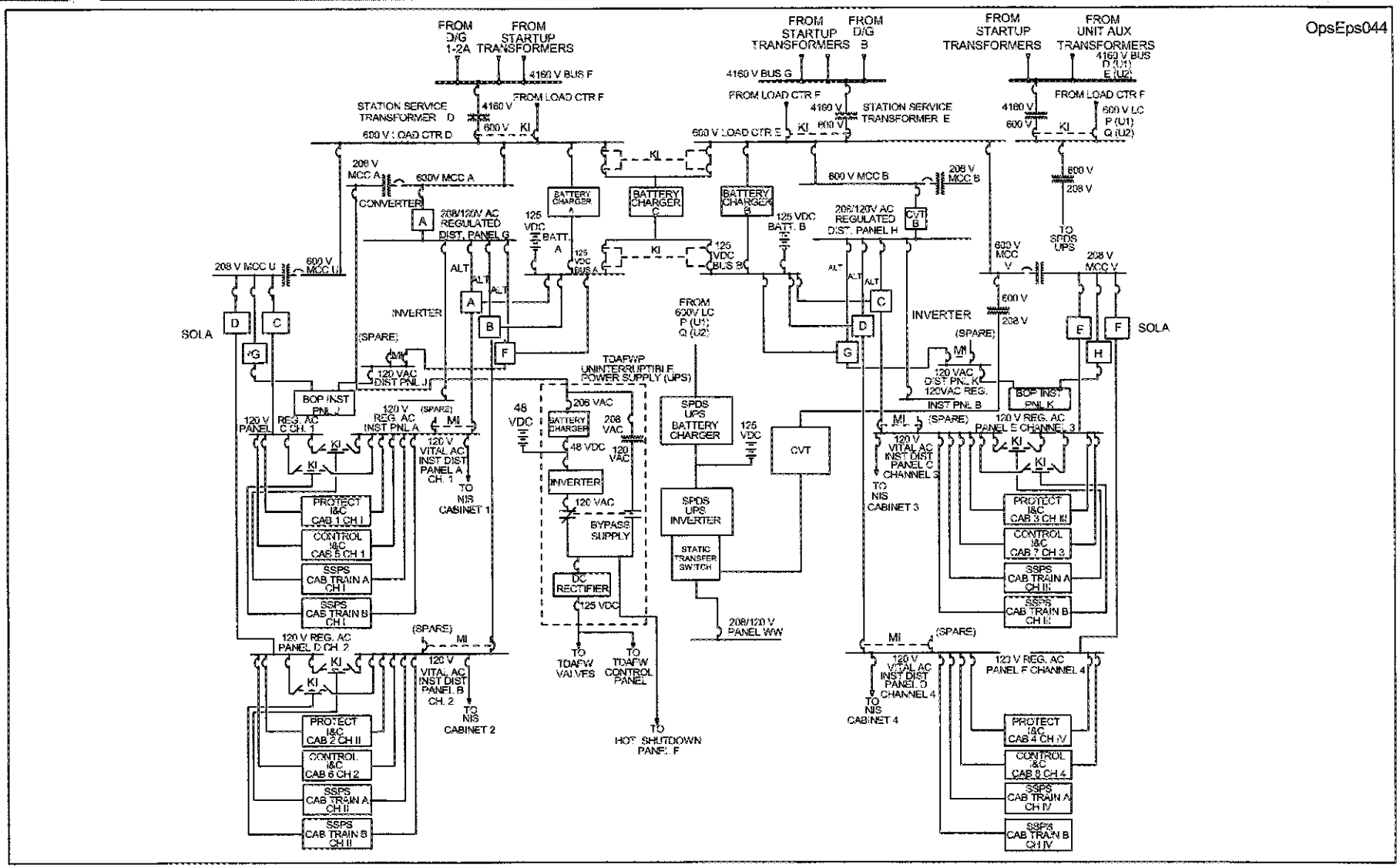

120-Volt AC Distribution

Figure 2

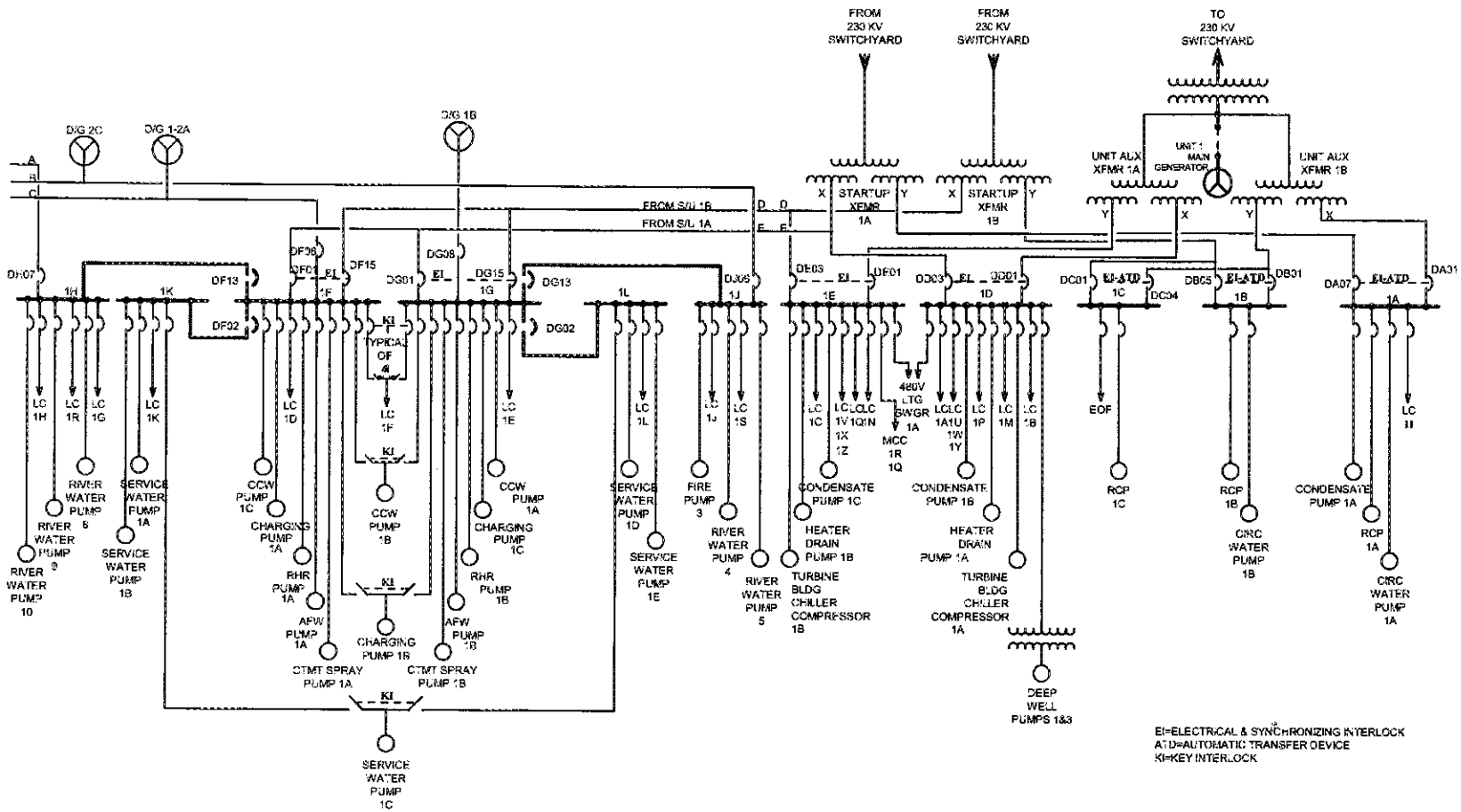

Unit 1 4160 Volt Electrical Distribution

Figure 3

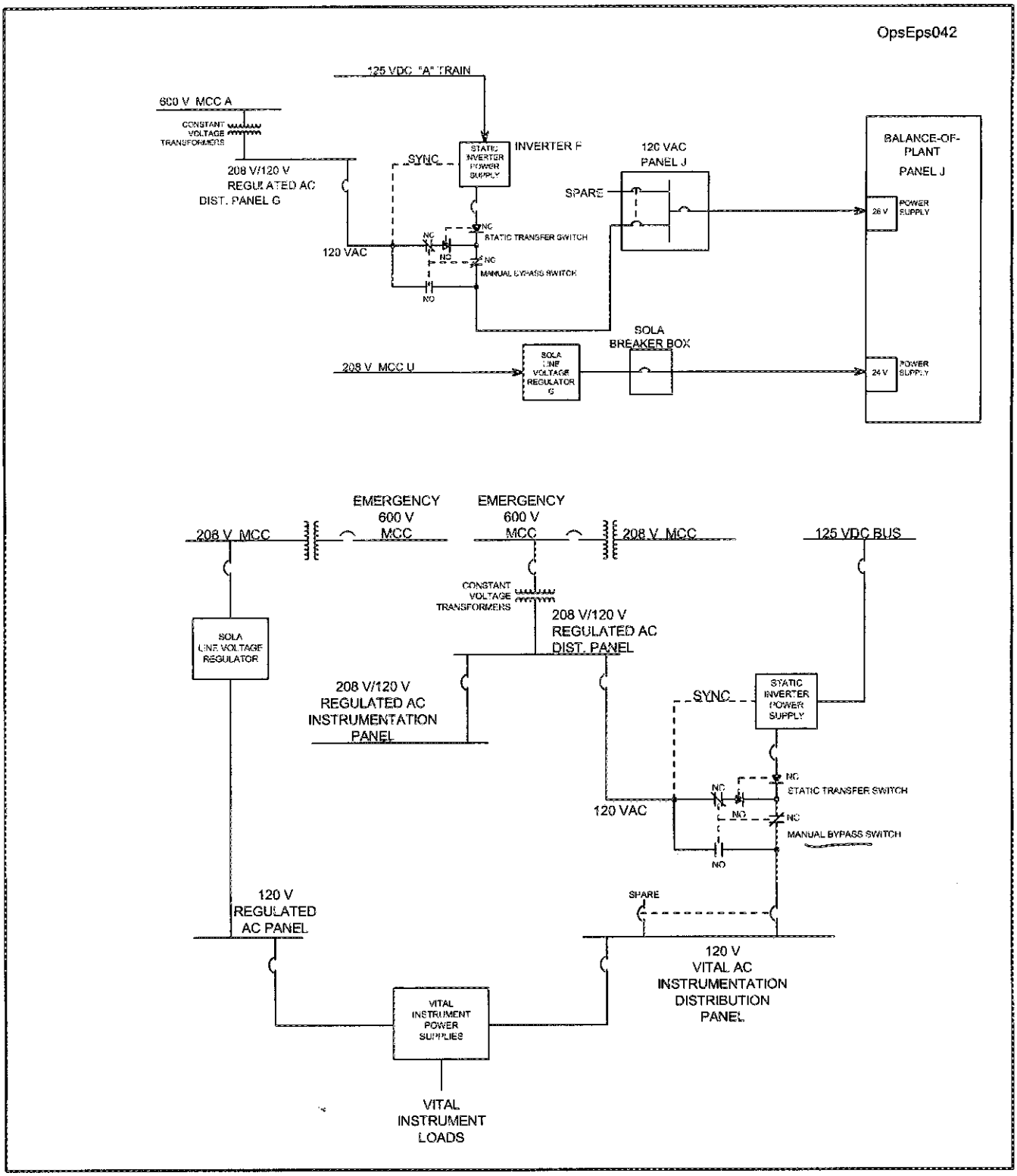

Basic 120 Volt Vital Distribution

Figure 1

An indicating light will illuminate when the transfer is complete. If the static transfer switch were to fail, it would fail to the alternate source supplying the load.

To allow maintenance on the inverter, without a loss of power to the load, a make-before-break manual bypass switch is used.

The following two conditions will result in an INVERTER FAULT alarm on the EPB:

1. Low DC input voltage (battery near exhaustion)
2. Low AC output voltage (inverter output undervoltage)

If the DC input voltage drops to 103V DC, the static transfer switch will operate to supply the load from the alternate source. If the DC input voltage rises to 145V DC, the DC input breaker will open and the load will shift to the alternate source.

The inverter instrumentation and controls are mounted on the inverter cabinet front. Each inverter provides meter indication for system AC output volts and amps, DC input volts and amps, inverter AC output amps, and inverter AC output frequency.

The controls for the inverter consist of the following:

1. Inverter to load push button; depressing this push button causes the static transfer switch to supply the load from the inverter.
2. Bypass source to load; depressing this push button causes the static transfer switch to supply the load from the alternate source (regulated panel G or H).
3. Battery input breaker; closing this breaker connects the battery bus to the inverter. Breaker will open if input voltage exceeds 145V DC.
4. Inverter output breaker; connects the AC output of the inverter to the static transfer switch.
5. Heater circuit breaker; normally open, used to prevent condensation during periods when the inverter is deenergized.
6. Manual bypass switch; used to manually transfer the load to the alternate source.

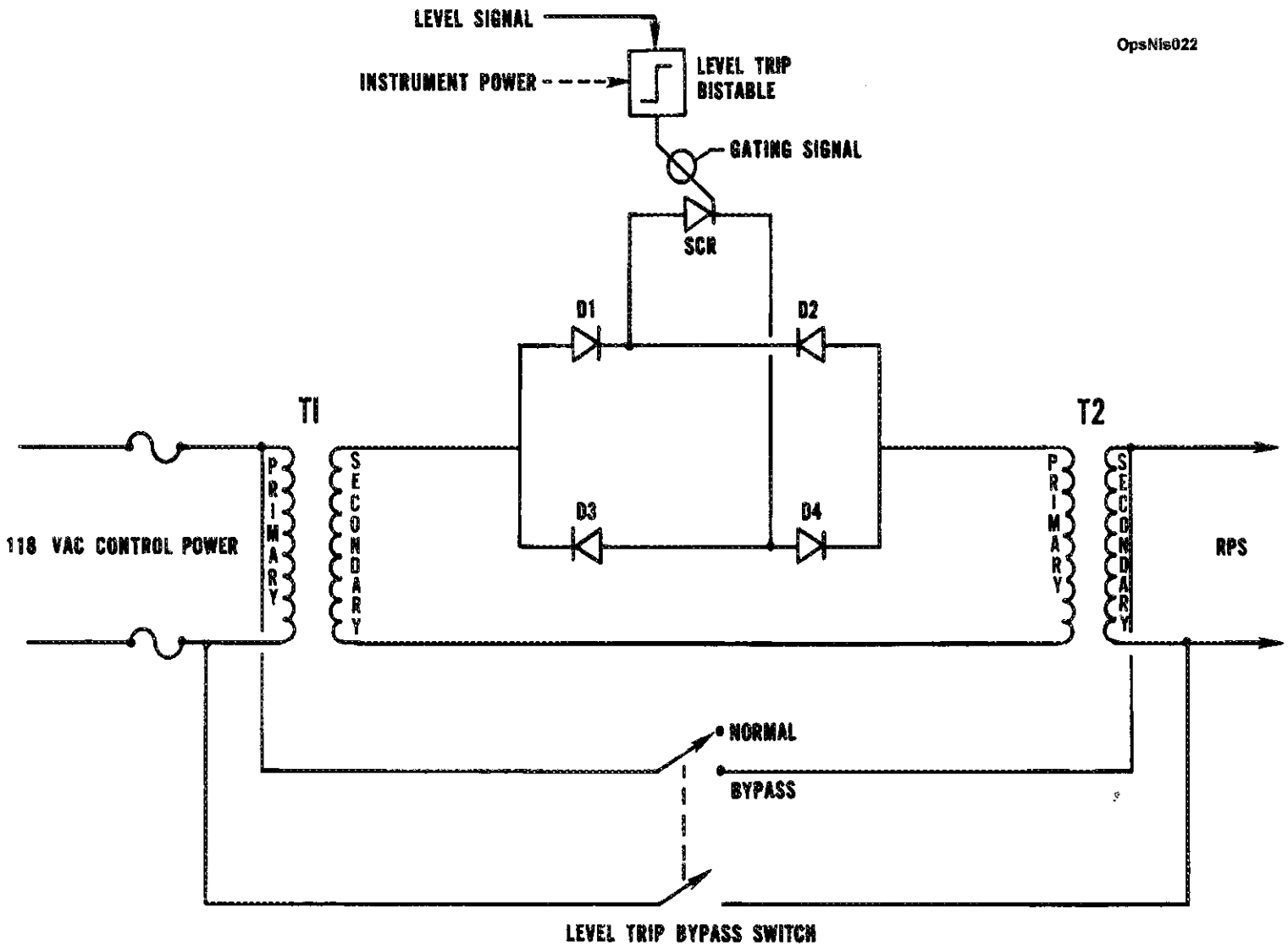

Source and Intermediate Range Level Trip Circuit

Figure 20

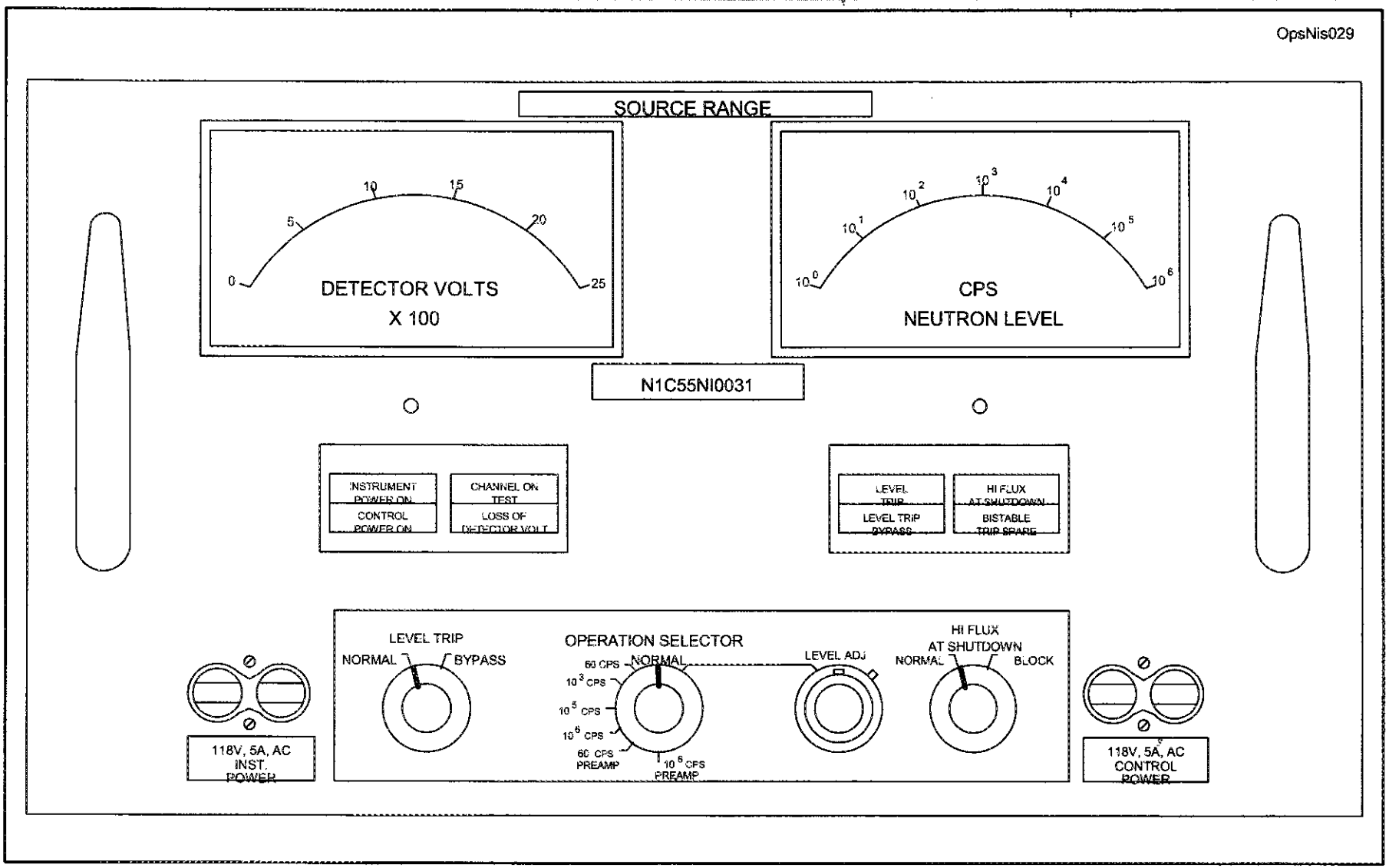

Source Range Drawer

Figure 21

TABLE 4
REACTOR TRIPS

REACTOR TRIP	SET POINT	COINCIDENCE	INTERLOCKS	PROTECTION AFFORDED
1. SR High flux	10^5 cps	1/2 > Set point	1. May be manually blocked above P-6 by turning Both Train A & B SR Block switches to BLOCK on MCB. 2. Automatically resets below P-6. 3. Each channel may be by-passed at the NIS racks. 4. May be manually reset below P-10.	S/U accident positive reactivity addition accident
2. IR High flux	Current Equal to 35% Rx Power	1/2 ≥ set point	1. May be manually blocked above P-10 by turning Both Train A & B IR Block switches to BLOCK 2. Trip auto reset below P-10 3. Each channel may be bypassed at the NIS racks.	S/U accident positive reactivity addition accident
3. PR High Flux Low Set point	25% Rx Power	2/4 ≥ set point	1. May be manually blocked above P-10 by turning Both Train A & B P/R Block switches to BLOCK on MCB. 2. Trip auto reset below P-10.	S/U accident positive reactivity addition accident
4. PR High flux High Set point	109% Rx Power	2/4 ≥ set point	None	Over power accident

22. 016K3.08 001/2/2/PZR PCS MALF/C/A 3.5*/3.7*/BANK/FA011005/RO/CVR

Unit 1 is operating at 100% steady-state power. All systems are in automatic and functioning properly.

- Pressurizer pressure channel PT-444 fails high.

Which ONE of the following represents the plant/system response if **NO operator action** is taken?

A. The Pressurizer heaters will de-energize and both PORVs open, thus reducing RCS pressure resulting in a Pressurizer low pressure reactor trip and SI.

B. The Pressurizer heaters will de-energize and both spray valves will open, thus reducing RCS pressure resulting in a Pressurizer low pressure reactor trip and SI.

C. Both spray valves close and Pressurizer heaters energize, thus raising RCS pressure resulting in a Pressurizer high pressure reactor trip.

D. The reactor will not trip on high pressure due to PORV-445A opening, thus reducing RCS pressure.

A. Incorrect. PORV 445A does not open. Only PORV-444B opens and then closes by P-11 at 2000 psig.

B. Correct.**The Pressurizer heaters will de-energize and both spray valves will open, thus reducing RCS pressure resulting in a Pressurizer low pressure reactor trip and SI.**
Spray valves go full open, the reactor trips at 1865 psig, and SI actuates at 1850 psig.

C. Incorrect. The spray valves open and the heaters deenergize.

D. Incorrect. Pressurizer pressure will be decreasing due to the spray valves opening.

016K3.08 Non-nuclear Instrumentation
Knowledge of the effect that a loss or malfunction of the NNIS will have on the following: (CFR: 41.7 / 45.6)
K3.08 – PZR PCS

7. Predict and explain the following instrument/equipment response expected when performing Pressurizer Pressure and Level Control System evolutions including the fail condition, alarms, trip setpoints (OPS52201H08):
- PT-444
- PT-445
- PT-455
- PT-456
- PT-457
- LT-459
- LT-460
- LT-462

15. Given a set of plant conditions describe the actions/effects that will occur following a PZR Pressure Malfunction with no operator action (OPS52201H17).

16. Given a set of plant conditions determine the corrective actions which are required to be taken following a PZR Pressure Malfunction (OPS52201H18).

Source: Farley Bank Question #O52201H08 #2
2001 nrc exam

APPENDIX 2

MALFUNCTION OF RCS PRESSURE CONTROL SYSTEM

NORMAL OPERATIONS

During normal operation and design transients, the pressurizer pressure control system acts to automatically control RCS pressure within limits. The system utilizes transmitters PT-444 and PT-445 for this function. The output functions and equipment controlled have been previously discussed but are summarized below.

Channel PT-444 provides pressure input for the master pressure controller PK-444A which controls the following components:

1. PORV PCV-444B control
2. Backup heater control
3. Variable heater control
4. Spray valve PCV-444C & 444D control
5. Controller output high alarm

Channel PT-445 provides pressure input signals for the following:

1. PORV PCV-445A control
2. High pressurizer pressure alarm
3. Low pressurizer pressure alarm

Pressure Control Channel Failure Response

Plant response to a control channel failure depends on the channel and the direction of the failure (high or low). The following assumes that all component controllers and the master pressurizer pressure controller are in AUTO and no operator action is taken.

FAILED CHANNEL	FAILURE DIRECTION	PLANT RESPONSE
445	Low	Pressurizer pressure low alarm
445	High	PORV-445A opens Pressurizer pressure high alarm Actual pressurizer pressure decreases rapidly PT-444 detects actual pressure decrease and causes the following to occur: • All backup heaters turn on • Variable heaters turn on to maximum • Spray valves close (if open) • PORV-445A closes at P-11 setpoint • Plant trip should not occur • Plant pressure should cycle at P-11 setpoint (NOTE: Pressurizer low pressure trip is rate sensitive; a trip may occur on rapid pressure decrease when PORV PCV-445A opens.)
444	Low	Backup heaters turn on Variable heaters turn on to maximum Spray valves close (if open) Actual pressurizer pressure increases to PORV PCV-445A open setpoint causing PORV to open Actual pressurizer pressure eventually decreases to the PORV PCV-445A close setpoint, causing PORV to close Plant pressure cycles around PORV open/close setpoints
444	High	PORV PCV-444B opens Backup heaters turn off Variable heaters turn off Spray valves open Plant pressure decreases rapidly PORV PCV-444B closes at P-11 setpoint Plant pressure continues to decrease due to spray valves still open Plant trip and SI should occur on low RCS pressure

If a channel failure causes a PORV to open, closing the PORV block valve (MOV-8000A/B) for the corresponding PORV will isolate the flow path to the pressurizer relief tank (PRT) and RCS pressure should stop decreasing. If the failed channel causes spray valves to open, manually closing the spray valves will terminate the pressure decrease. Since pressurizer heaters turning on or off will affect plant pressure more slowly than the opening of PORVs or spray valves, your priority should be toward controlling the PORV and spray valve effect on RCS pressure.

Component Failures

Individual component failures can have a significant effect on plant conditions. A pressurizer PORV, safety valve, or the auxiliary spray valve failing open will cause pressurizer (RCS) pressure to decrease rapidly, which in turn may cause a reactor trip and safety injection. The other operable components that control pressurizer pressure (heaters, spray valves, etc.) should respond in an attempt to counteract the effects the failed component has on plant conditions.

A failure of pressurizer heaters will cause pressure to slowly decrease, which allows sufficient time for operator action to restore pressure.

The failed components effect on various plant parameters and other components will be further discussed during classroom sessions and will be experienced as part of various simulator training sessions.

Malfunction Of RCS Pressure Control System

Any one of several annunciators previously mentioned in the main body of this lesson will sound to initiate operator investigation and response. All of these annunciators encompass primarily the same procedural actions and usually refer the operator to the response for window HC1, PRZR PRESS HI-LO. The actions required are summarized below.

Immediate Actions

Attempts to stabilize pressurizer pressure and secure the pressure transient that is occurring are directed by taking manual control of components, as necessary. These components include, but are not limited to, the spray valves, PORVs, and heaters. Priority should be given to the PORVs and spray valves since the pressurizer heaters have a slower effect on pressurizer pressure.

23. 017K1.02 001/2/2/CETC/MEM 3.3/3.5/NEW/FA011005/RO/CVR

Subcooling is constantly calculated by the Subcooled Margin Monitor using the output of several instruments. Which one of the following is correct concerning the temperature instruments used in the Subcooling calculations?

A. In the RTD mode, the lowest reading RTD of the 3 RCS Hot leg and 3 RCS Cold Legs is used.

B. In the Individual Value display mode, the lowest reading of Core Exit and Upper Head Thermocouples is used.

C. In the Individual Value display mode, the fifth hottest of all Core Exit Thermocouples (excluding the Upper Head thermocouples) is used.

D. In the Core Exit Thermocouple mode, the hottest of all Core Exit Thermocouples (excluding the Upper Head thermocouples) is used.

A. Incorrect. This would be correct if it said the "highest" instead of the lowest.

B. Incorrect. This would be correct if it said the "highest" instead of the lowest.

C. Incorrect. The upper head TCs are not excluded from the calc in the individual value mode, and also the fifth hottest is not used in the calc. even though the fifth hottest is used for diagnostic purposes throughout the ERG procedure network.

D. Correct. **In the Core Exit Thermocouple Mode, the hottest of all Core Exit Thermocouples (excluding the Upper Head thermocouples) is used.**

This instrument is correct for this one (of the three) Subcooled Margin Monitor Modes. The CETC mode is the normal mode of the Subcooled Margin Monitor because the outlet of the core is the most significant area of concern to monitor the potential for boiling in the core. The upper head region is somewhat physically separated from the core outlet, and the Subcooling may be higher or lower in the Upper Head than at the core outlet.

017K1.02 In-core Temperature Monitor
K1 Knowledge of the physical connections and/or cause effect relationships between the ITM system and the following systems: (CFR: 41.2 to 41.9 / 45.7 to 45.8)
K1.02 – RCS

2. Explain the purpose and operation including the design features and functions as well as protective interlocks of the following major components associated with the Inadequate Core Cooling Monitor System (OPS52202E02):
- Reactor Vessel Level Indication System (RVLIS)
- HJTC Sensors
- HJTC Level Displays
- Level Display Mimic
- Subcooled Margin Monitor (SMM)
- CETC Monitor
- ICCMS Defeat Panel
- Front Display Panel

3. Describe the physical in plant location of the following major components associated with the Inadequate Core Cooling Monitor System (OPS52202E03):
- HJTC sensors
- HJTC level displays
- Subcooled Margin Monitor (SMM)
- CETC Monitor
- ICCMS defeat panel
- Front Display Panel

INADEQUATE CORE COOLING MONITORING SYSTEM (ICCMS)

INTRODUCTION

The inadequate core cooling monitoring system (ICCMS) is a safety grade processing and display system. It meets the following Nuclear Regulatory Commission (NRC) requirements:

1. Monitors the approach to inadequate core cooling
2. Monitors the existence of inadequate core cooling
3. Monitors the recovery from inadequate core cooling

These monitoring requirements are met by measuring and displaying the following parameters:

1. Margin to saturation
2. Reactor vessel water level
3. Core exit temperatures (CETs)

GENERAL DESCRIPTION

The ICCMS consists of the following: (Figure 1)

1. The subcooled margin monitor (SMM), which measures saturation/superheat margin
2. The heated junction thermocouple (HJTC) system, which monitors level and temperature in the upper plenum and upper head area
3. The CETC monitor, which measures the temperature of the reactor coolant as it leaves the reactor core as well as the temperature at selected locations in the head plenum.
4. Various displays, cabinets, thermocouples, controls, and data link to the safety parameter display system (SPDS)

The function of the HJTC portion of the ICCMS is to monitor reactor coolant inventory in the reactor vessel during saturation conditions. The need for monitoring ICCMS begins with the reactor coolant system (RCS) at saturation conditions. During an accident, the RCS is at saturation until sufficient coolant is lost to uncover the top of the active core. Instrumentation is, therefore,

needed to directly measure this coolant inventory loss. The HJTC system provides this measurement of the collapsed liquid level above the upper core plate.

The system configuration consists of two identical channels. Each channel consists of a cabinet, panel inserts, a reactor vessel level (RVL) mimic display, a thermocouple probe assembly, two heater controllers, and a microprocessor.

The reactor vessel level indication system (RVLIS) is available during normal and abnormal conditions in all modes except refueling. It is seismically and environmentally qualified. The RVLIS utilizes heated junction thermocouple and unheated junction thermocouple pairs placed in a probe. There are two probes that utilize two of the 12 spare control rod drive mechanism (CRDM) reactor vessel head penetrations, located 180° apart. There are eight thermocouple pairs located in each of the two probes (Figure 2). These eight pairs are located in eight discrete levels above the core in the upper plenum and upper head area. These thermocouple pairs, one heated and one unheated junction, provide a voltage input to the HJTC processor. The processor uses the signal (voltage) from the heated and unheated junctions to determine if that point in the reactor is covered with water. When the junctions are covered with water, the ΔT will be relatively small. When the junction is uncovered and steam exists around it, the ΔT will become large and the processor will change the LED from green to red on the MCB mimic. The heated junction voltage is like a reference voltage. The unheated junction provides actual temperature (voltage). The differential temperature (ΔT) is calculated by the HJTC processor from the two voltage inputs.

The function of the SMM portion of the ICCMS is to display the margin to saturation in degrees Fahrenheit (°F) or psig and includes superheated conditions. The two channels utilize various temperature inputs (excluding upper head temp for the normal display) and RCS and pressurizer pressure.

The function of the core exit thermocouple (CETC) monitor portion of the ICCMS is to display the highest CETC temperature, including the upper head thermocouples.

DETAILED DESCRIPTION

Functional Design

The ICCMS provides a two-channel, seismically qualified class 1E display of inadequate core cooling information necessary to comply with NRC requirements. In addition, the ICCMS meets the criteria for uninterrupted performance during and subsequent to events expected to occur during the life of the plant, including earthquakes.

The ICCMS utilizes a microprocessor-based design for the signal processing equipment in conjunction with LED displays and associated push buttons for each of the two channels, along with a reactor vessel mimic that displays RVL in eight increments above the upper core plate.

The HJTC processing and control function receives inputs from HJTCs and calculates the level above the upper core plate and upper support plate.

The ICCMS consists of two redundant channels from signal input through processing to ICCMS displays and data links to the SPDS (using fiber optics). Each channel is electrically independent and physically separated up to the isolation for the SPDS data link.

The power supply for the ICCMS cabinet is from class 1E distributions (120V AC panels J & K) with diesel generator backup capability, which allows the use of the ICCMS during all plant modes. The ICCMS system is powered from the Train related Aux Building 125V DC bus and therefore will be available during an LOSP condition.

Reactor Vessel Level (RVL)

RVL is calculated for the following:

1. The region above the upper core plate and below the upper support plate - the upper plenum region
2. The region above the upper support plate - the upper head region

The RVL measurement in the head is independent of the RVL measurement in the plenum since it is possible to have water level indications in both regions during early stages of a loss-of-coolant accident (LOCA). When an inventory loss event, such as a LOCA, occurs, flashing occurs throughout the reactor vessel. The collapsed water level initially falls rapidly due to void formation and the loss of inventory. Steam bubbles formed in the liquid of the upper head and CRDM support columns rise and form a steam region in the top of the vessel. Meanwhile, steam

shall be considered uncovered if the sensor above it is uncovered. Top sensors will be considered covered for failed sensors, and the next sensor will trigger the low RVL alarm.

If one heater fails (shorts), the low differential temperature alarm setpoint of 25°F will be exceeded, and the appropriate error for that sensor will be displayed on the HJTC monitor. If one heater fails (open), four sensor locations will be affected. When an odd numbered sensor fails, all the odd numbered sensors in that channel will exceed the low alarm setpoint. An additional error will be displayed, which notes that a heater power controller may be failed. This open heater failure also is displayed for even numbered heaters.

Subcooled Margin Monitor (SMM) (Figure 11)

The SMM displays the temperature margin to saturation (including superheat) in degrees Fahrenheit and coolant pressure margin to saturation in psig on the MCB.

First, saturation temperature is calculated using the minimum of the pressure inputs, and saturation pressure is calculated using the maximum temperature input. The temperature margin to saturation is the saturation temperature minus the maximum temperature excluding the upper head thermocouples (in the CETC mode). The pressure margin to saturation is the minimum pressure input minus the saturation pressure. Superheat margin to saturation is displayed as a negative number, while the subcooling is displayed as a positive number.

The temperature margin and the pressure margin to saturation are both calculated for the three following areas:

1. RCS using resistance temperature detectors (RTDs) (in the RTD mode)
2. Highest thermocouple - core exit or upper head (in the individual valve display mode)
3. Highest CETC (in the CETC mode)

The inputs to the SMM are as follows per channel:

1. RTDs
   a. 3 T_{hot}
   b. 3 T_{cold}
2. Thermocouples (highest)
3. Pressurizer pressure (lowest compared to RCS pressure)
   a. Channel A - PT-455

b. Channel B - PT-457

4. RCS pressure (lowest compared to pressurizer pressure)

a. PT-402 - feeds each channel

b. PT-403 - feeds each channel

The normal display mode for the SMM is the "CETC" mode. This displays the margin to saturation (°F) using the highest CETC (excluding the upper head) and the lowest pressure input.

Another mode is the "RTD" mode, which displays the margin to saturation (°F) using the hottest RCS RTD (T_h or T_c) and the lowest pressure. Due to the slower response of the RTDs, a loss of core subcooling may not be detected as rapidly as in the "CETC" mode.

These modes are selected by depressing the "CETC/RTD" push button until the appropriate half of the split lens is illuminated.

A method is also provided to perform a lamp test and display the following:

1. T_{hot} and T_{cold} RTDs
2. PT-402, PT-403, and pressurizer (1) pressures
3. Pressure margins for:

a. RCS using RTDs

b. CETCs

c. Upper head/CETC (highest)

4. Upper head/CETC temperature margin

These functions are accessed similarly to the individual value displays for the HJTC monitor in accordance with SOP-68.0.

Individual value displays are exited by one of the following two methods:

1. No operator/monitor interaction for three minutes, except for point 16 (automatic exit).
2. Wait for "----," then depress "CETC/RTD" push button.

Alarms are generated by any one or more of the following:

1. Any individual failed input
2. Less than eight valid CETC inputs
3. Only one valid RCS hot leg input
4. CETC or RCS temperature margin alarm or failure (<10°F subcooled)

The alarms are acknowledged and identified similarly to the alarm functions for the HJTC monitor in accordance with SOP-68.0.

Core Exit Thermocouple (CETC) Monitor

The CETC monitor on the MCB (Figure 12) displays the highest CETC temperature, including the upper head, for each channel and allows individual CETC temperatures to be displayed on the MCB. The thermocouple ranges are 200°F to 2300°F and are environmentally qualified using the control room installed panel as the reference junction point, instead of the containment (no adjustment needed due to adverse containment temperature).

The following are the CETC monitor inputs:

1. Unit I, channel A (Tables 9, 10, and 11)
   a. 18 CETCs
   b. 8 upper head thermocouples
2. Unit I, channel B (Tables 9, 10, and 11)
   a. 21 CETCs
   b. 4 upper head thermocouples
3. Unit II, channel A (Tables 12, 13, and 14)
   a. 24 CETCs
   b. 2 upper head thermocouples
4. Unit II, channel B (Tables 12, 13, and 14)
   a. 23 CETCs
   b. 2 upper head thermocouples

The normal mode for the CETC monitor is the "T-MAX" mode, which continuously displays the highest core exit or upper head thermocouple.

There are three submodes selectable for the CETC monitor, which include (1) the "CE" submode, (2) the "HI" submode, and (3) the "ALL" submode. The "CE" submode allows individual thermocouple temperatures to be displayed (Table 8). The "HI" submode allows the operator to display the highest or second highest thermocouple temperature in a quadrant (Table 7). The "ALL" submode displays the highest and next highest thermocouple temperature per quadrant, then all the individual thermocouple temperatures sequentially. Refer to SOP-68.0 for guidance for actually

manipulating the push buttons to enter the desired mode. To exit any of the submodes, the following may be utilized:

1. Push the "T-MAX/CET" push button.
2. Wait three minutes with no operator/monitor interaction.
3. Push the "SUBMODE" push button.

Alarms are generated by the CETC monitor for any of the following conditions:

1. Any failed (high or low) or disconnected CETC input
2. One or more CETC temperature > 700°F
3. Less than eight valid CETCs

Alarms can be acknowledged similarly to the HJTC monitor using SOP-68.0 for guidance.

ICCMS Defeat Panel

The ICCMS defeat panel (located in the control room rack area) is used for reading individual inputs for troubleshooting with external equipment and associated switches for removing these inputs from service (Figure 8). When the switches are in the normal position, the inputs are used by the processor. When these switches are in disconnect, the inputs do not get to the processor and are no longer used by the ICCMS for display and/or calculations. These disconnected inputs are treated as failed inputs by the processors. These disconnect switches are used to remove failed inputs and to prevent the system from monitoring an invalid input.

Front Panel Display

The front panel display is located on the front of the microprocessor chassis in the ICCMS cabinet. It contains four push button switches and a four-digit indicator as shown on Figure 9. Reference SOP-68.0 for the operation of the front panel display.

Push Button Module - Light Bulb Replacement

Since the ICCMS is seismically qualified, the indication lights have been seismically mounted. There is a small spring loaded lever at the bottom of the push button display module which must be pushed to the right to release the display module. The display module will pop out about 1/16 of an inch for removal. Replace the bulbs and push the display module back into position until a click is heard or the lever pops back to the original (approximate center) position.

HJTC Heater Power Controller

A heater power controller provides input power to the heated junction heaters. There are two heater power controllers per channel, each controlling four sensors, giving a total of four controllers. The first heater power controller controls HJTCs 1, 3, 5, and 7, while the second controls 2, 4, 6, and 8. The purpose of the heater controller is to provide a sufficient differential temperature (DT) signal to give an indication of voiding when the heated junction is uncovered and, at the same time, reduce heater power when the heated junction is uncovered in order to prevent burnout.

One of the inputs of the heater controller is, therefore, based on heated junction temperature (Figure 10). Heater controller signal will remain at a maximum value until the highest heated junction temperature reaches a preset value (1100°F). As the highest heated junction temperature increases past this preset value, the output will be reduced at a linear rate down to zero at a second preset value (1400°F). This prevents heater burnout.

A second term in the heater control circuitry is calculated to prevent excessive thermal shock during quenching at low pressure operation. When the highest DT from an HJTC exceeds a certain preset value (500°F), power to the heaters will be ramped down linearly to zero at a second preset value (700°F). The minimum output value of the two control circuits will be selected and output to the heater power supplies in the corresponding probe assembly.

INSTRUMENTATION AND CONTROL

Main Control Board

Instrumentation and controls available to the operator on the MCB section C is the RVL mimic, the SMM (channels A and B), and the CETC monitor (channels A and B).

ICCMS Cabinet

The ICCMS cabinets are located in the rack area of the control room. Inside the ICCMS cabinet is the HJTC monitor and the HJTC heater controllers, the processor, the ICCMS monitoring panel (bypass panel), and cabinet power switches.

TECHNICAL SPECIFICATIONS

TABLE 5

SUBCOOLED MARGIN MONITOR (SMM) DISPLAY ERROR CODES

NOTE

- IF a SMM Input is disconnected by the ICCMS Monitoring Panel or the signal is set up too high out-of-range, THEN the error number will change from EXX to ELXX, indicating that SMM input XX has been eliminated.

- The highest of the RCS hot or cold leg temperatures is used for Saturation Margin Calculations in the RTD mode. IF 2 of the 3 hot leg inputs are failed, THEN RTD saturation margin is failed (E14).

ERROR NUMBER	DESCRIPTION
E0	ICCMS Hardware Error
E1	RCS Loop 1 Cold Leg low out of range
E2	RCS Loop 1 Hot Leg low out of range
E3	RCS Loop 2 Cold Leg low out of range
E4	RCS Loop 2 Hot Leg low out of range
E5	RCS Loop 3 Cold Leg low out of range
E6	RCS Loop 3 Hot Leg low out of range
E7	RCS Loop 1 Pressure PT-403 low out of range
E8	RCS Loop 3 Pressure PT-402 low out of range
E9	Pressurizer Pressure Train A(B) PT-455 (PT-457) low out of range
E10	Spare SMM Input
E11	Spare SMM Input
E12	Spare SMM Input
E13	Less than 8 Valid CETC Temperatures (CETC Margin Failed)
E14	Only One Valid RCS Temperature (RTD Margin Failed)
E15	CETC, Upperhead/CETC, or RTD Temperature Margin Alarm (< 10 °F subcooled RTD margin or > 10 °F superheated CETC margin)

TABLE 6

CORE EXIT THERMOCOUPLE MONITOR (CETC) DISPLAY ERROR CODES

NOTE

- IF a CETC input is disconnected by the ICCMS monitoring panel OR the signal is set too high out-of-range, THEN the error number will change from EXX to ELXX, indicating that CETC input XX has been eliminated.

- Channel A has 26 CETC inputs and channel B has 25 CETC inputs.

- A tag inside the door of the ICCMS cabinet gives the CETC tag number corresponding to the ICCMS monitoring panel identification. Table 8 (Core Exit Thermocouple Monitor Display CE Submode) also gives tag and core identification.

ERROR NUMBER	DESCRIPTION
E0	ICCMS Hardware Error
E1	CETC Input 1 Shorted or Open
E2	CETC Input 2 Shorted or Open
E3	CETC Input 3 Shorted or Open
E4	CETC Input 4 Shorted or Open
E5	CETC Input 5 Shorted or Open
E6	CETC Input 6 Shorted or Open
E7	CETC Input 7 Shorted or Open
E8	CETC Input 8 Shorted or Open
E9	CETC Input 9 Shorted or Open
E10	CETC Input 10 Shorted or Open
E11	CETC Input 11 Shorted or Open
E12	CETC Input 12 Shorted or Open
E13	CETC Input 13 Shorted or Open
E14	CETC Input 14 Shorted or Open
E15	CETC Input 15 Shorted or Open
E16	CETC Input 16 Shorted or Open
E17	CETC Input 17 Shorted or Open
E18	CETC Input 18 Shorted or Open

TABLE 6 (CONT)

CORE EXIT THERMOCOUPLE MONITOR (CETC) DISPLAY ERROR CODES

ERROR NUMBER	DESCRIPTION
E19	CETC Input 19 Shorted or Open
E20	CETC Input 20 Shorted or Open
E21	CETC Input 21 Shorted or Open
E22	CETC Input 22 Shorted or Open
E23	CETC Input 23 Shorted or Open
E24	CETC Input 24 Shorted or Open
E25	CETC Input 25 Shorted or Open
E26	CETC Input 26 Shorted or Open (Spare on Channel B)
E27	CETC Input 27 Shorted or Open (Spare)
E28	CETC Input 28 Shorted or Open (Spare)
E29	CETC Input 29 Shorted or Open (Spare)
E30	CETC Input 30 Shorted or Open (Spare)
E31	CETC Input 31 Shorted or Open (Spare)
E32	CETC Input 32 Shorted or Open (Spare)
E33	One or more CETC Temperatures above 700 °F
E34	Less than 8 Valid CETCs (CETC margin and TMAX Failed)

TABLE 7

CORE EXIT THERMOCOUPLE MONITOR DISPLAY HI SUBMODE

	DESCRIPTION
H11	Highest CETC in Quadrant 1
H12	Next highest CETC in Quadrant 1
H21	Highest CETC in Quadrant 2
H22	Next highest CETC in Quadrant 2
H31	Highest CETC in Quadrant 3
H32	Next highest CETC in Quadrant 3
H41	Highest CETC in Quadrant 4
H42	Next highest CETC in Quadrant 4

TABLE 8

CORE EXIT THERMOCOUPLE MONITOR DISPLAY CE SUBMODE

FARLEY UNIT II

NOTE

- Channel A of the ICCMS has 26 CETC inputs Channel B of the ICCMS has 25 CETC inputs

- In the core location and tag number columns CHA and CHB mean channel A and channel B, respectively. The last 2 digits of the instrument tag number are shown in the tag number column. The preceding information for both A and B channels is TE-23——; where —— are the numbers listed in this table.

ADDRESS	CORE LOCATION		DESCRIPTION	NUMBER		TAG
	CHA	CHB		CHA	CHB	UNITS
CE00	--	--	Lamp Test	--	--	--
CE01	A8	B5	CETC Input 1	01	02	°F
CE02	B10	E4	CETC Input 2	03	04	°F
CE03	E7	E12	CETC Input 3	05	06	°F
CE04	E14	J12	CETC Input 4	07	18	°F
CE05	F3	K8	CETC Input 5	08	21	°F
CE06	F5	C8	CETC Input 6	09	27	°F
CE07	F9	C12	CETC Input 7	10	28	°F
CE08	F11	D3	CETC Input 8	11	29	°F
CE09	G11	D5	CETC Input 9	12	30	°F
CE10	G6	E10	CETC Input 10	13	32	°F
CE11	H8	F13	CETC Input 11	14	33	°F
CE12	H15	G2	CETC Input 12	15	34	°F
CE13	J2	G8	CETC Input 13	16	35	°F
CE14	J10	G15	CETC Input 14	17	36	°F
CE15	K3	H3	CETC Input 15	19	37	°F
CE16	K5	H5*	CETC Input 16	20	38	°F
CE17	K11	H9	CETC Input 17	22	39	°F
CE18	M9	H13	CETC Input 18	23	41	°F

TABLE 8 (CONT)

CORE EXIT THERMOCOUPLE MONITOR DISPLAY CE SUBMODE

FARLEY UNIT II

ADDRESS	CORE LOCATION		DESCRIPTION	NUMBER		TAG
	CHA	CHB		CHA	CHB	UNITS
CE19	N6	L6	CETC Input 19	24	42	°F
CE20	P8	L8*	CETC Input 20	25	43	°F
CE21	R7	L12	CETC Input 21	26	44	°F
CE22	E8*	L14	CETC Input 22	31	45	°F
CE23	H11*	M3	CETC Input 23	40	46	°F
CE24	M11	N10	CETC Input 24	47	50	°F
CE25	N4	P7	CETC Input 25	48	51	°F
CE26	N8	--	CETC Input 26	49	--	°F
CE27	--	--	CETC Input 27 Spare	--	--	°F
CE28	--	--	CETC Input 28 Spare	--	--	°F
CE29	--	--	CETC Input 29 Spare	--	--	°F
CE30	--	--	CETC Input 30 Spare	--	--	°F
CE31	--	--	CETC Input 31 Spare	--	--	°F
CE32	--	--	CETC Input 32 Spare	--	--	°F

*Upperhead Thermocouple

TABLE 9

UNIT I

CHANNEL A THERMOCOUPLES (TC) (18)

LOCATION	TAG #
B05	G0002B
E04	G0004B
F03	G0008B
F05	G0009B
H08	G0014B
A08	G0001B
C12	G0020B
F11	G0011B
F13	G0033B
H15	G0015B
J02	G0016B
N06	G0024B
N08	G0049B
R07	G0026B
J10	G0017B
J12	G0018B
M11	G0047B
P08	G0025B

TABLE 10

UNIT I

CHANNEL B THERMOCOUPLES (TC) (21)

LOCATION	TAG #
C08	G0027B
D03	G0029B
D05	G0030B
G01	G0012B
G08	G0035B
H03	G0037B
B10	G0003B
E08	G0031B
E10	G0032B
G15	G0036B
H11	G0040B
H05	G0038B
K03	G0019B
L06	G0042B
M03	G0046B
H09	G0039B
H13	G0041B
L08	G0043B
L12	G0044B
L14	G0045B
N10	G0050B

TABLE 11

UNIT I

UPPER HEAD THERMOCOUPLES (TC) (12 - 8 CHA; 4 CH B)

LOCATION	CHANNEL	TAG #
A/B12	B	G0007B
E09	B	G0006B
E09	A	G0010B
E09	A	G0005B
E09	A	G0022B
G/H09/10	B	G0021B
H/J07/08	A	G0013B
L07	A	G0023B
L07	A	G0020B
L07	B	G0034B
L07	A	G0048B
N/M05/06	A	G0051B

TABLE 12

UNIT II CHANNEL A THERMOCOUPLES (TC) (24)

LOCATION	TAG #
E07	G0005B
F03	G0008B
F05	G0009B
G01	G0012B
G06	G0013B
H08	G0014B
A08	G0001B
B10	G0003B
E14	G0007B
F09	G0010B
F11	G0011B
H15	G0015B
J02	G0016B
K03	G0019B
K05	G0020B
N04	G0048B
N06	G0024B
N08	G0049B
R07	G0026B
J10	G0017B
K11	G0022B
M09	G0023B
M11	G0047B
P08	G0025B

TABLE 13

UNIT II

CHANNEL B THERMOCOUPLES (TC) (23)

LOCATION	TAG #
B05	G0002B
C08	G0027B
D03	G0029B
D05	GOO30B
E04	G0004B
G02	G0034B
G08	G0035B
H03	G0037B
C12	G0020B
E10	G0032B
E12	G0006B
F13	G0033B
G15	G0036B
K08	G0021B
L06	G0042B
M03	G0046B
P07	G0051B
H09	G0039B
H13	G0041B
J12	G0018B
L12	G0044B
L14	G0045B
M10	G0050B

TABLE 14

UNIT II

UPPER HEAD THERMOCOUPLES (TC) (4 - 2 CH A; 2 CH B)

LOCATION	CHANNEL	TAG #
E08	A	G0031B
H05	B	G0038B
H11	A	G0040B
L08	B	G0043B

SUBCOOLED MARGIN MONITOR

Displays temperature margin to saturation in °F and coolant pressure margin to saturation in psig on the MCB.

First, saturation temperature is calculated using the minimum of the pressure inputs and saturation pressure is calculated using the maximum temperature input.

The temperature margin to saturation is the maximum temperature minus the saturation temperature. The pressure margin to saturation is the saturation pressure minus the minimum pressure input.

The temperature margin and the pressure margin to saturation are both calculated for the three following areas:

1. RCS - using RTDs
2. Highest thermocouple (core exit or upper head)
3. Highest core exit thermocouple

Inputs to the subcooled margin monitor are as follows per channel:

1. RTDs
   a. 3 T_{Hot}
   b. 3 T_{Cold}
2. Thermocouples (highest)
3. Pressurizer Pressure (lowest compared to RCS press)
   a. Channel A - PT 455
   b. Channel B - PT 457
4. RCS Pressure - (PT 402 & 403 - lowest compared to pressurizer)

Normal display mode for the subcooled margin monitor is the "CETC" (core exit thermocouple) mode. This displays the margin to saturation (°F) using the highest core exit thermocouple and the lowest pressure input.

Another mode is the "RTD" mode which displays the margin to saturation (°F) using the hottest RCS RTD and the lowest pressure.

A method is provided to perform a lamp test and display the following:

1. T_{Hot} and T_{Cold} RTDs
2. PT 402, 403, and Pressurizer (1) Pressures
3. Pressure Margins for:
   a. RCS
   b. CETC
   c. Upper Head/CETC (highest)
4. Upper Head/CETC Temperature Margin

Alarms are generated by any one or more of the following:

1. Any individual failed input
2. Less than 8 valid CETC inputs
3. Only 1 valid RCS hot leg input
4. CETC or RCS temperature margin alarm or failure (< 10°F subcooled)

Individual value display exits:

1. No operator - monitor interaction for 3 minutes (Automatic)
2. Wait for "----" then press CETC/RTD push button

CORE EXIT THERMOCOUPLE MONITOR

Displays highest CETC temperature for each channel and allows individual CETC temperatures to be displayed on the MCB.

Thermocouple ranges are 200°F to 2300°F and are environmentally qualified using the control room installed panel as the reference junction point instead of the containment.

The following are the CETC monitor inputs:

1. Unit 1, Channel A
   a. 18 CETCs
   b. 8 upper head thermocouples
2. Unit 1, Channel B
   a. 21 CETCs
   b. 4 upper head thermocouples
3. Unit 2, Channel A
   a. 24 CETCs
   b. 2 upper head thermocouples
4. Unit 2, Channel B
   a. 23 CETCs
   b. 2 upper head thermocouples

There are 3 submodes selectable for the CETC monitor: the CE, HI, and all submodes.
Alarms generated by the CETC monitor are:

1. Any failed (high or low) or disconnected CETC input
2. One or more CETC temperature > 700°F
3. Less than 8 valid CETCs

Individual value display exits:

1. Push "T_{Max}/CET" button
2. Wait 3 minutes with no operator-monitor interaction
3. Push "submode"

24. 022A2.04 001/2/1/CTMT CLG/C/A 2.9*/3.2/MOD/FA011005/RO/

The following conditions exist on Unit 1:

- A Large Break LOCA has just occurred.
- A Dual Unit LOSP has occurred.
- 4160v Bus 1K is de-energized due to an electrical fault.
- No other failures have occurred.

Which one of the following is the required action and reason for that action due to the loss of Service Water for this event?

A. Immediately secure ALL running "A" Train Diesel Generators to prevent overheating.

B. Immediately secure ALL CCW and HHSI pumps to prevent the HHSI pumps from overheating.

C. Align ONE Unit 2 air compressor to Unit 1 to prevent ALL Unit 1 air compressors from tripping on high temperature.

D. Verify ONE CS pump and ONE B Train containment cooler operating to ensure design bases containment pressure reduction capability is maintained.

A. Incorrect - A Train DGs are supplied by unit 2 SW and do not have to be secured immediately. IAW AOP-10 they will be left running as long as the other unit is available to provide flow and the LO temp alarm can be kept clear. Also the 1C DG is running supplying the unit 2 busses and this would not be secured.

B. Incorrect - HHSI flow in the affected train is secured in AOP-9.0 at step 10, but **all** HHSI flow and CCW flow would not be secured.

C. Incorrect - The air compressors are supplied by both trains of SW and have an emergency supply of SW when TB isolation valves go closed on a T signal.

D. Correct - **Verify EITHER CS pump and a B Train containment cooler operating to ensure design bases containment pressure reduction capability is maintained.**
Due to the loss of SW and the LOSP, one train of SW will not be available to the Ctmt coolers and only 1 CTMT cooler will be running in the other train. Even though the CS system is available and running when Ctmt pressure reaches 27 psig, having less Ctmt coolers will cause pressure reduction capability to be less than with more Ctmt coolers and will be seriously degraded in the initial stages of the accident due to only having one Ctmt cooler available. Ctmt pressure will not exceed design pressure and will be reduced due to the CS pumps availability, but it will not be reduced as quickly as with more ctmt coolers.

022A2.04 Ability to (a) predict the impacts of the following malfunctions or operations on the CCS; and (b) based on those predictions, use procedures to correct, control, or mitigate the consequences of those malfunctions or operations:
Loss of Service Water

Identify any special considerations such as safety hazards and plant condition changes that apply to the Service Water System (OPS52102F04).

Explain the purpose and operation including the design features and functions, capacities,
and protective interlocks of the following major components associated with the Containment Spray and Cooling System (OPS40302D02):

- Containment Spray Pumps
- Containment Spray Rings and Nozzles
- Containment Cooling Fans
- Containment Coolers

Kewannee 1 1997 nrc exam

original question

..022.A2.04 | 12/18/1997

Kewaunee 1 | Exam Level R | Mark Question | Print Recor | New Sear

Question

The following conditions exist:

-The plant was operating at 100% power, when a Large Break LOCA into Containment occurred

- Both Train "A" Service Water Pumps have tripped

-NO other failures have occurred

Which ONE (1) of the following will result from the loss of Train "A" Service Water?

Answer: Containment pressure reduction capability will be degraded

Distracter 1 Auxiliary Feedwater flow to the "A" Steam Generator will be less than required

Distracter 2 The "A" Safety Injection Pump will lose electrical power

Distracter 3 Station and Instrument Air will be lost

Distracter Analysis:

Answer:

Distracter 1:

Distracter 2:

Distracter 3:

This does not meet A2 standards so it was modified to meet it.

I did not use Dist 1 or 2 B/c these are not cred.ble distractors at FNP.
I did not put RCPs on this as a distractor since a SI signal will isolate SW to the RCP air cooler & a Phase B will isolate CCW to seals & oil & RCPs will be secured.

Step	Action/Expected Response	Response NOT Obtained

6.5 Verify SW isolated to standby CCW heat exchanger.

Standby CCW HX	1C	1B	1A
SW TO 1C(1B,1A) CCW HX Q1P16MOV	[]3130C closed	[]3130B closed	[]3130A closed

6.6 Maintain SW flow to in service CCW heat exchanger 3500-4000 gpm.

In Service CCW HX	1C	1B	1A
1C(1B,1A) CCW HX DISCH FCV HIC	[]3009C adjusted	[]3009B adjusted	[]3009A adjusted

___ 7 **Check operating CCW train - SUPPLIED FROM AFFECTED SW TRAIN.**

7 Proceed to step 14.

___ 8 **Verify CCW PUMP in non affected train - STARTED.**

___ 9 **Verify CHG PUMP in non affected train - STARTED.**

****

CAUTION: Steps 8 and 9 must be complete before step 10 is performed to ensure seal injection is maintained to the RCPs.

****

___10 **Verify all CHG PUMPs in affected train - STOPPED.**

___11 **Perform FNP-1-AOP-9.0, LOSS OF COMPONENT COOLING WATER in conjunction with this procedure.**

Page Completed

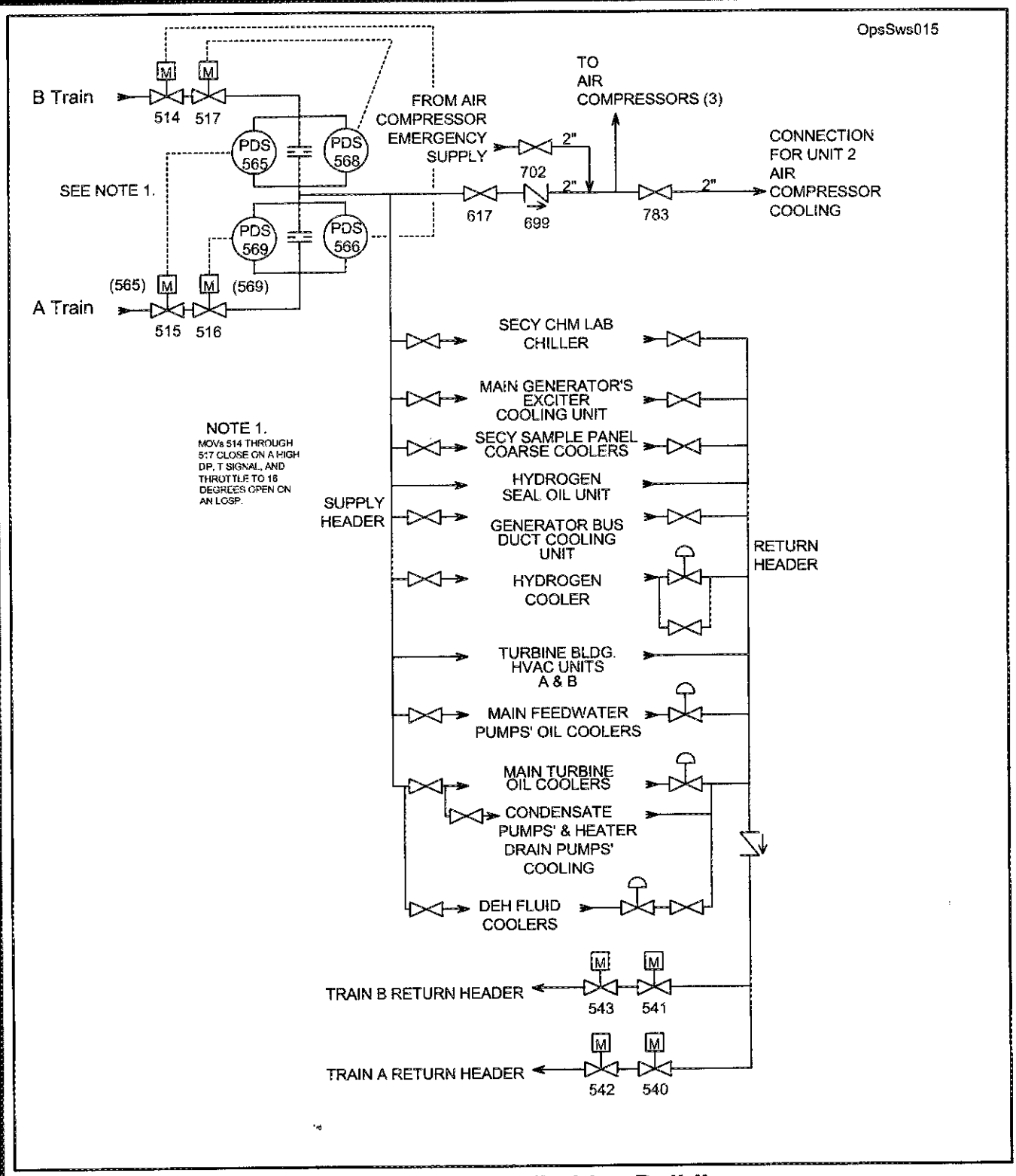

Service Water To Turbine Building

Figure 8

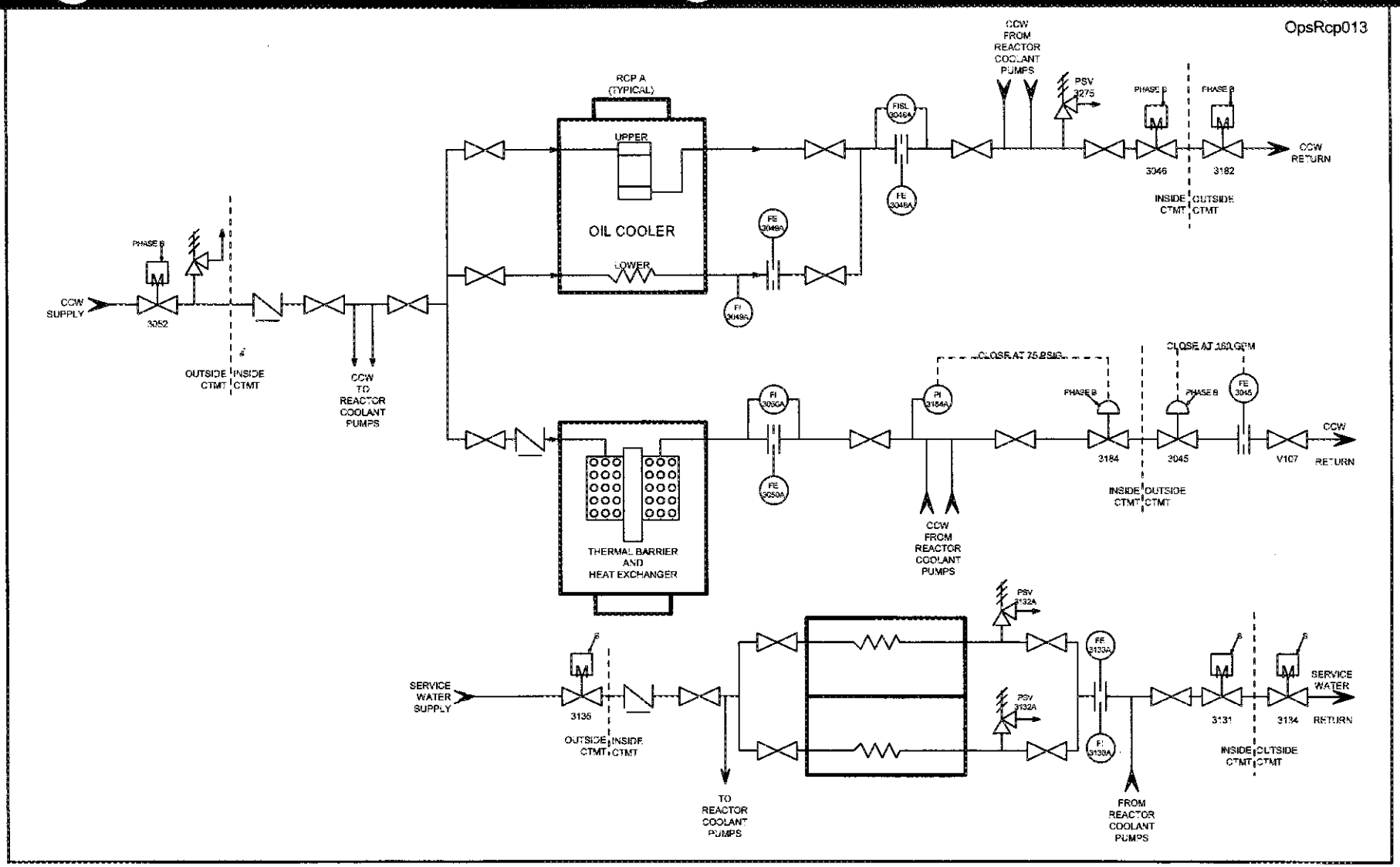

RCP - CCW & SW System

Figure 11

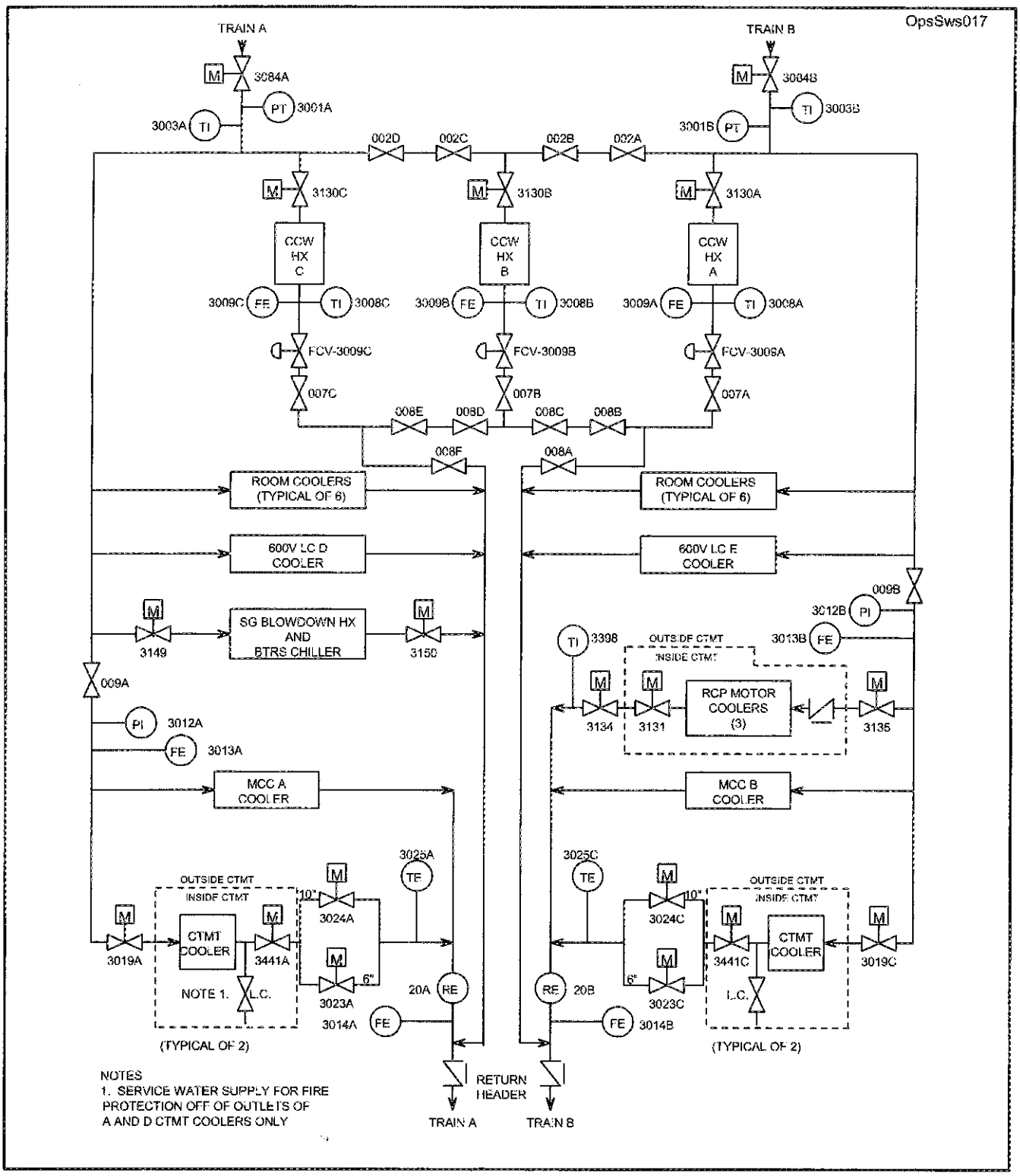

Service Water To Auxiliary Building

Figure 10

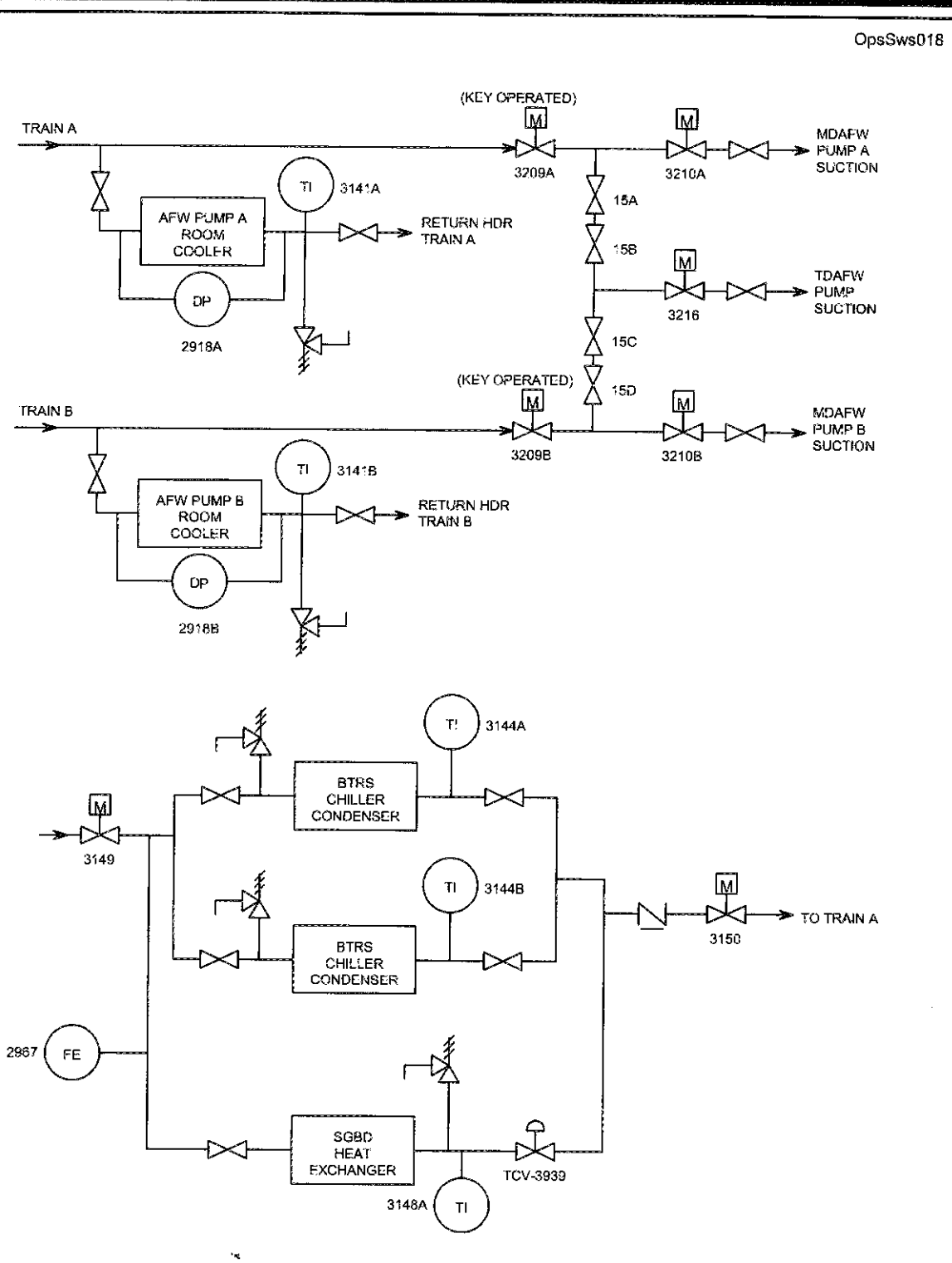

Service Water To AFW Pumps, BTRS Chillers, and SGBD Heat Exchanger

Figure 11

During normal operation, the fan cooler units will provide adequate cooling and mixing of the containment atmosphere. During accident conditions, the fan coolers provide the required cooling and depressurization of the containment. Each cooler was originally designed to handle 1/3 of the normal containment heat load.

Each fan cooler unit consists of a 2-speed fan and a finned cooling coil, which is supplied with service water. During normal operation, each fan takes a suction at the 155-foot elevation of the containment. The air then flows through an inlet screen, over the cooling coils through the fan, past the normally closed dropout damper, and into a common discharge header. The discharge header distributes the cooled air to the lower regions of containment via distribution ductwork. During this mode of operation, the fans are in fast speed with service water being supplied to each cooling coil.

Upon receipt of a safety injection signal (SIS), the fan coolers operating in fast speed will stop. If a loss of off-site power has occurred, the selected fan cooler in each train will automatically start in slow speed. With off-site power available, all available fan coolers will automatically start in slow speed. The fans run in slow speed to protect them from motor overload in a steam environment. The service water flow will automatically increase to 2000 gallons per minute per cooling unit, thus increasing the cooling capacity of the fan coolers. Each fan discharge duct has a dropout type damper held in place by fusible links. If the temperature reaches 135°F, the fusible link will fail open, the damper will drop out, and the backpressure on the fan will be reduced to provide free flow through the fan.

The fan coolers can be controlled locally at their respective load center or remotely from the main control board (MCB). The service water valves are controlled from the MCB and the balance of plant (BOP) panel. The outlet damper opens and closes automatically when starting or stopping the fan. Appropriate instrumentation on the main control board determines proper operation in both the normal and emergency mode.

dissolves, and the pH of the water is raised within four hours to a range of 7.5 to 10.5. After the containment spray system is switched to the recirculation phase (i.e., the spray pumps are taking a suction on the containment sump), containment is re-sprayed with the alkaline solution. Studies have indicated no adverse effects on austenitic stainless steel stress corrosion crack initiation as a result of this short-duration exposure to low pH spray.

Containment Cooling System

The containment cooling system consists of four containment air coolers, each with a one-third cooling capacity during normal operation. Each air cooler consists of a fan and finned-tube coil water supplied by the service water system.

As the post-accident containment atmosphere, which consists of a steam-air mixture, is circulated through the cooling coils, it is cooled, and a portion of the steam is condensed. Coil capacity adequately maintains pressure and temperature below peak calculated LOCA conditions.

The containment cooling system design assumes that core residual heat appears as steam in containment.

Coil design and arrangement provide for rapid drainage of large quantities of condensed steam, thereby preventing loss of cooling capacity.

Unmodulated service water flow to the containment air cooling coils reduces the probability of a failure due to a modulating valve or controller malfunction. Each of the four containment coolers has a separate branch supply and return run through the containment wall with appropriate isolation valves.

The heat sink for the containment air cooling units is the service water system. Adequate redundancy in this system assures continued availability in the event of a single failure. Failure of an inlet or outlet valve to a containment cooler will be detected by flow reduction.

One spray train adequately provides the required heat removal capability inside containment for all postulated accidents. This capability equates to that of three containment cooling fans. Thus, the containment spray system provides adequate back-up cooling capacity. The cooling units cannot provide back-up capability to the containment spray system because the units cannot remove iodine.

The unreactive methyl iodide (CH_3I) has little solubility in water. Therefore, it is removed very slowly from the containment atmosphere and becomes the dominant form of iodine in the containment atmosphere after several hours. This phenomenon is of only minor consequence since only 4% of the total iodine released is in the organic form (CH_3I), and the containment preaccess charcoal filtration units are 99% efficient in the removal of organic iodides.

Spray Pump Discharge Flow (FT-958A and B)

A flow element is located on the discharge of each spray pump downstream of the discharge isolation valve. Indication is provided on the MCB.

Spray Headers and Nozzles

Each of the two independent spray header trains contains five semicircular spray rings and one vertical spray pipe supplied by each pump. The ring arrangement ensures that one train will supply 360° coverage of the containment.

Each nozzle has a 3/8-inch outlet for maximum spray dispersion. By varying each ring's nozzle angle orientation and relative locations, a minimum area coverage of 90% of the containment is ensured. This provides uniform containment atmospheric heat and fission product removal.

On Unit 1, each of the two spray header trains has a test line installed inside containment. The test line connects to the spray header between the spray header check valve (V-8822A and B) and the spray header manual isolation valve (V-8823A and B). Each spray header test line contains a normally removed spool piece. During testing, the spool piece is inserted, and flow is admitted to test the spray header check valve. Flow is controlled by a common throttle valve and directed to the fuel transfer canal.

Containment Coolers (Figures 2 and 4)

Four 1/3 capacity containment air coolers are located just above the 155-foot elevation of the containment. Each cooler consists of twelve cooling coils, a vaneaxial fan, and a structural

steel housing with an integral post-accident dropout plate. The fan is located in the central portion of the cooler housing with the cooling coils surrounding it. Air is drawn from the containment atmosphere through the coils, up through the fan, and discharged back to the containment via ductwork. During accident conditions, the fusible links holding the dropout plate will be released due to the elevated containment temperature at 135°F. The outlet flow from the cooler will then be directed through the dropout plate into the containment, bypassing the distribution ductwork. This reduces the backpressure on the fan and thus reduces steam damage (erosion) to the fan, increases its capacity, and prevents overloading the motor.

The fan may operate at two speeds, 40,000 scfm and 80,000 scfm. The fast speed is for normal operation. The slower speed is used for accident conditions to prevent motor overload in a steam environment. A loss of off-site power (LOSP) or a safety injection actuation will trip all four coolers in fast speed. If an LOSP has occurred, the selected fan cooler in each train will be sequenced on from the LOSP sequencer in slow speed. If a safety injection occurs and off-site power is available, then all available containment cooler fans will automatically start in slow speed. If a safety injection occurs and off-site power is not available, then the selected fan cooler for each train will be sequenced on in slow speed. The fan coolers may be controlled from their respective load control center panel or from the MCB. A discharge damper is located in the outlet duct of each cooler.

The motor-operated damper (MOV-3186A, B, C or D) will open automatically when the associated fan is started in either slow or fast speed. Position indication is located both locally at the load control center panel and on the MCB.

As air passes through the cooler, the moisture in the air is condensed on the cooling coils. The physical arrangement of the coils directs the condensate to the lower portion of the cooler. A drain line directs the condensate from each cooler to the containment waste sump. Each line has an air-operated isolation valve controlled from the BOP panel. Level indication in each line, as well as a high level alarm (Figure 12), is provided on the MCB. This drainage system is part of the RCS leakage detection system and is covered in the Technical Specifications 3.4.15 (Figure 4).

Per DCP 9637-2 and 9636-1, both Units have eliminated the Containment Cooler Drain System needle valves and the CTMT CLR DRN LVL HI-HI annunciator (BB2). The controls for the CTMT Cooler Drain AOVs (HS-3395A, B, C & D) have been modified by adding timers, rescaling the level transmitters, changing the valve handswitches on the BOP Q panel to OFF-AUTO-OPEN and tying in low and high level switch setpoints to circuit. The AOVs are normally closed and will fail closed on a loss of power.

This control system functions as follows:

Condensation collects behind the now normally closed drain AOVs. At 12" level in the standpipe, a four-minute timer starts. If the timer times out before the level in the standpipe reaches 55", then the drain AOV will open for 30 seconds to drain the accumulated condensate. If the level reaches 55" before the four-minute timer times out, then annunciator BB1 (CTMT CLR DRN LVL HI) will come in and the associated drain AOV will be interlocked closed. If a high level alarm occurs, the abnormal condensate level can be evaluated. After the condition has been evaluated, the system can be manually purged by going to the OPEN position on the appropriate AOV and the alarm reset.

Each cooler is supplied with inlet and outlet moisture indicators, outlet temperature indicators and alarms, and a fan fault alarm (Figure 12) on the MCB.

Service water is capable of supplying cooling water to the coolers at two different rates, 800 and 2000 gpm. On an "S" signal, the fan speed shifts to slow, and the service water flow increases to the maximum flow rate. Service water supplies the coolers through MOV-3019A, B, C and D. The service water is train-separated, with train A supplying coolers A and B, while train B supplies C and D (Figure 4). These valves are located on the rad side 121' elevation.

Cooling water normally discharges through a 10-inch line including MOV-3441A, B, C, and D, which are located inside containment, then through a 6-inch line and MOV-3023A, B, C, and D. On an "S" signal, water also discharges through a 10-inch discharge line through MOV-3024A, B, C, and D, thus increasing the flow through the coolers. These valves are located in the auxiliary building rad side 121' elevation. B train service water inlet and coolers C and D outlet pressures have local indications in 121' piping penetration room. A train indicators are in the BTRS package room (both units). Inlet and outlet flow transmitters provide indication

on the MCB and provide a differential flow alarm to detect leakage (Figure 11). The difference in inlet and outlet flow is measured and compared against a setpoint. The setpoint is 300 gpm (+0,-75) for total flow rates < 1980 gpm and it automatically increases to a setpoint of 750 gpm (+0, -30) for total flow rates ≥ 1980gpm. Radiation monitors (RE-20A and B) are provided on the outlet from each containment cooler service water train to detect the release of radioactive service water to the environment. They provide alarm function only refer to RCP-252.2 for setpoint.

OPERATIONS

Instrumentation and Control

The following discusses the major controls associated with the containment spray system and the containment coolers. These controls are found on the MCB, with the exception of the containment cooler service water discharge valves and the containment cooler condensate drain header isolation valves, which are located on the BOP.

Containment Spray Pump to Spray Header Isolation Valves (MOV-8820A and B) (Figure 5)

A three-position (CLOSE/AUTO/OPEN, spring return to AUTO) handswitch controls each valve. In the AUTO position, the valve will automatically open on a containment spray actuation signal ("P" signal). Valve position indication lights are located above the switch.

Containment Spray Pumps (Figure 6)

A three-position (STOP/AUTO/START, spring return to AUTO) handswitch controls each pump. Placing the switch in the START position will start the pump. Placing the switch in the STOP position will stop the pump and reset the 86 relay. In the AUTO position, the pump will automatically start upon receipt of a containment spray actuation signal ("P" signal) if an LOSP has not occurred. If an LOSP has occurred with the "P" signal present, a safety injection signal to the ESF sequencer must also be present, or the ESF sequencer must be in test, to start the pump. The load shed signal will automatically stop the pump. The pump will also trip on an

shutdown/cooldown of the secondary side, while at the same time ensuring maximum cooling water flow is available for the emergency diesel generators. A 2-inch line from each train upstream of these valves supplies cooling water to the air compressors when the turbine building is isolated.

Each service water system inside the containment and the auxiliary building train supplies cooling water to at least one component cooling water system heat exchanger, two containment air coolers, one 600V load center cooler, one battery charging room cooler, one motor control center room cooler, one residual heat removal pump room cooler, one containment spray pump room cooler, one auxiliary feedwater pump room cooler and high head safety injection pump room cooler, and one component cooling water system pump room cooler. Service water is also supplied to the following nonsafety-related equipment: steam generator blowdown heat exchanger, BTRS chillers, and reactor coolant pump motor air coolers.

Service water discharging from the auxiliary building, the turbine building, the diesel generator building, and the dilution bypass line junctions in another valve box. Exiting from this valve box are the redundant 30-in. discharge headers supplying water to the circulating water canal and service water return to the river. Each line is equipped with an isolation valve (Q1P16V545 and 546). Service water is supplied to the circulating water makeup system via a 30-in. line. This line is equipped with an isolation valve (Q1P16V550) and a circulating water makeup control valve (Q1P16V560). The control valve is an automatic air-operated control valve, controlled by the level controller located in the circulating water pump structure wet pit. Unit 1 only has a manual isolation valve (N1P16V748) in the makeup line to the circulating water canal.

The service water return line to the river is a 36-in. line. It is equipped with an isolation valve (Q1P16V549) and a standpipe discharging into a surge tank. The standpipe maintains a backpressure on the service water return lines from the auxiliary building, containment, and turbine building. During normal operation the standpipe provides the necessary backpressure on the systems being serviced. The surge tank provides the volumetric capacity to allow for flow transients. Upstream of the standpipe/surge tank, cooling tower blowdown joins this stream and the line continues to the standpipe/surge tank across a flow measuring device. The flow rate is displayed in the control room and is input into a totalizer that displays the cumulative amount of

Step	Action/Expected Response	Response NOT Obtained

NOTE: The loss of Service Water to the Turbine Building could be unisolable and would affect both trains of Service Water. The intent of Step 4.2 RNO is to allow isolation of an affected train if possible. If both trains are affected then the Turbine Building must be isolated and the turbine generator removed from service.

4.2	IF diesel generator NOT required, THEN secure diesel generator using ATTACHMENT 1.	4.2 Perform the following SW isolations: 4.2.1 Isolate SW on the affected train(s) to the turbine building. Close SW TO TURB BLDG ISO A TRN valves [] Q1P16V515 [] Q1P16V516(B Trn Elec) Close SW TO TURB BLDG ISO B TRN valves. [] Q1P16V514 [] Q1P16V517(A Trn Elec) Close SW FROM TURB BLDG A HDR ISO valves. [] Q1P16V540 [] Q1P16V542 Close SW FROM TURB BLDG B HDR ISO valves. [] Q1P16V541 [] Q1P16V543

Step 4 continued on next page.

___Page Completed

Step	Action/Expected Response	Response NOT Obtained
		4.2.2 IF both trains of service water have been isolated to the Turbine Building, THEN perform the following:
		4.2.2.1 IF Rx power is less than 35% AND SW flow cannot be immediately restored, THEN trip the turbine and refer to FNP-1-AOP-3.0, TURBINE TRIP BELOW THE P9 SETPOINT.
		4.2.2.2 IF Rx power is greater than 35% AND SW flow cannot be immediately restored, THEN trip the reactor and refer to FNP-1-EEP-0.0, REACTOR TRIP
		4.2.3 Perform FNP-1-AOP-7.0, LOSS OF TURBINE SERVICE BUILDING WATER in conjunction with this procedure.
		4.2.4 Close SW TO RCP MTR AIR CLRS Q1P16MOV3135 and SW TO BLDN HX & BTRS CHLR Q1P16MOV3149.
		4.2.5 Verify diesel building SW header valves open. [] SW TO/FROM DG BLDG HDR A Q1P16V519/537 open [] SW TO/FROM DG BLDG HDR B Q1P16V518/536 open

Step 4 continued on next page.

____Page Completed

Step	Action/Expected Response	Response NOT Obtained
		4.2.6 IF unable to maintain running diesel generator(s) lube oil temperature below the alarm(155' DG BLDG local control panel), THEN perform the following: 4.2.6.1 For Shared diesel generators verify Unit 2 Service Water aligned.
NOTE:	No evaluation has been performed to demonstrate that the Unit 2 'B' Train Service Water System is capable of supplying the cooling requirements for 1B and 2B diesel at the same time.	
		4.2.6.2 For 1B diesel generator, IF available from Unit 2 THEN align Unit 2 Service Water. 1B DIESEL GENERATOR SW SUPP TO/FROM UNIT-2 (UNIT 1) [] Q1P16V522/530 open [] Q1P16V523/531 closed 4.2.7 IF, unable to maintain the running diesel generator(s)lube oil temperature alarm clear(155' DG BLDG local control panel), THEN stop the affected diesel generator ATTACHMENT 1.
___ 5	**Verify all available SW PUMPs in non affected train STARTED.**	

___Page Completed

25. 022AA2.02 001/1/1/CVCS/C/A 3.2/3.7/BANK-N/FA011005/RO/

Unit 1 is operating at 100% power when the following annunciators come into alarm:

- EA2, CHG HDR FLOW HI-LO.
- DD1, RCP SEAL INJ FLOW LO.
- DE1, REGEN HX LTDN FLOW DISCH TEMP HI.

The OATC notices the following:

- Pressurizer level has begun to fall.
- VCT level has begun to rise.

Which one of the following events has occurred?

A. Loss of charging.

B. Letdown isolation.

C. Small break LOCA.

D. Pressurizer PORV failed open.

Reference: FNP-1-ARP-1.4 Loc. DD1 & DE1, FNP-1-ARP-1.5 Loc. EA2

A - Correct- **Loss of charging.**
all conditions given would be a result of loss of all charging flow.

B - Incorrect- During a loss of letdown, PRZR level would be rising and VCT level would be lowering.

C - Incorrect- If a SBLOCA or PORV OPEN had occurred, PRZR level could be falling (depending on break size) but VCT level would also be falling due to increased charging flow and constant LTDN flow. REGEN HX LTDN FLOW DISCH TEMP HI alarm would also not be in because there is max. cooling occuring due to the high CHG flow. CHG HDR FLOW HI-LO alarm and RCP SEAL INJ FLOW LO alarm could both be in alarm.

D - Incorrect- If a SBLOCA or PORV OPEN had occurred, PRZR level could be falling (depending on break size) but VCT level would also be falling due to increased charging flow and constant LTDN flow. REGEN HX LTDN FLOW DISCH TEMP HI alarm would also not be in because there is max. cooling occuring due to the high CHG flow. CHG HDR FLOW HI-LO alarm and RCP SEAL INJ FLOW LO alarm could both be in alarm.

000022 Loss of Rx Coolant Makeup /2 Ability to determine and interpret the following as they apply to Loss of Reactor Coolant pump makeup: AA2.02 – charging pump problems

Predict and explain the following instrument/equipment response expected when performing Chemical and Volume Control System evolutions including the fail condition, alarms, trip setpoints. (OPS40301F08).

CVCS-40301F07 #32
2003 nrc exam - only question available

LOCATION EA2

A2
CHG HDR FLOW HI-LO

SETPOINT: 1. High: 125 GPM
2. Low: 23 GPM

ORIGIN: Flow Bistable FB-122 from Flow Transmitter (Q1E21FT122)

PROBABLE CAUSE

1. High Flow
   a) Charging Flow Control Valve Q1E21FCV122 (Q1E21V347) failed open.
   b) Letdown flow rate exceeding ~ 140 gpm.
   c) RCS leakage.
   d) Pressurizer level controller LK-459F fails high.
2. Low Flow
   a) CHG FLOW FK 122 controller malfunction.
   b) Operating Charging Pump tripped.
   c) Pressurizer level controller LK-459F fails low.

CAUTION: Oscillating flow indications and/or oscillating ammeter indications could be indicative of air or gas intrusion into the charging pump suction. IF such indications are present, THEN consideration should be given to securing both letdown and any running charging pump AND ensuring the charging pump suction piping is adequately vented prior to return to service. (Ref. SOER 97-1)

AUTOMATIC ACTION

NOTE: With FK-122 M/A station in AUTO flow controller FK-122 limits high flow to 130 gpm and low flow to 18 gpm.

1. LTDN LINE ISO valve Q1E21LCV459 closes when pressurizer level on LT 459 reaches 15% and Q1E21LCV460 closes when pressurizer level decreases to 15% on LT460 (refer to FNP-1-ARP-1.8 window HA3).
2. The orifice isolation valves close when either LT459 or LT 460 reaches 15%.
3 IF the operating pump trips on overload, THEN the associated swing OR dedicated pump in the same train will automatically start.

IMMEDIATE ACTION

NONE

SUPPLEMENTARY ACTION

1. Place turbine load on HOLD.
2. Determine the cause of the malfunction by checking the status of the following:
   - 2.1 Charging flow.
   - 2.2 Letdown flow.
   - 2.3 BTRS flow (if in operation)
   - 2.4 Charging pump running.
   - 2.5 Pressurizer level controller LK459F.
3. IF there is indication of a controller malfunction, THEN perform one of the following:
   - 3.1 IF the pressurizer level controller has malfunctioned, THEN pressurizer level controller LK 459F may be placed in manual and adjusted to control level with FK-122 remaining in AUTO.
   - 3.2 IF desired, THEN place CHG FLOW FK 122 in MANUAL and adjust as required to maintain pressurizer level at the programmed level.
4. Maintain pressurizer level at the program level until the affected component (s) can be restored to normal operation as follows:
   - 4.1 IF charging flow control valve Q1E21FCV122 fails open, and solid plant operations is NOT in effect, THEN perform the following:
     - 4.1.1 Increase letdown flow to 120 gpm.
     - 4.1.2 Adjust SEAL WTR INJECTION HIK 186 as required to maintain RCP seal injection flow 6-13 gpm not to exceed the limits of T.S. Bases figure B 3.5.5-1.

NOTE:	**Letdown flow is isolated prior to isolating charging flow to protect the regenerative heat exchanger from the effects of uncooled letdown flow. Refer to FNP-1-AOP-16.0, LOSS OF LETDOWN, for guidance as necessary.**

     - 4.1.3 IF necessary to control increasing pressurizer level, THEN isolate the RCS as follows:
       - 4.1.3.1 Secure letdown.
       - 4.1.3.2 Close CHG PUMPS TO REGENERATIVE HX Q1E21MOV8107 or MOV8108.

CAUTION: The following steps for establishing bypass flow around FCV-122 should be performed as quickly as possible.

4.1.4 Open charging flow regulator bypass valve Q1E21V581.

4.1.5 Close charging flow regulator inlet valve 1-CVC-V-8402B (Q1E21V134B).

4.1.6 IF not isolated in step 4.1.3.1, THEN reduce letdown flow to 60 gpm.

4.1.7 IF closed in step 4.1.3.2, THEN open CHG PUMPS TO REGENERATIVE HX Q1E21MOV8107 or MOV8108.

NOTE: Q1E21V135 is a designed throttle valve and should be used for throttling first. IF it is not effective, THEN Q1E21V581 may be used as required.

4.1.8 Throttle charging flow regulator bypass valve Q1E21V135 (1-CVC-V-8403) OR Q1E21V581 to maintain pressurizer level at the programmed level.

4.1.9 WHEN charging flow established, THEN establish normal letdown as required using FNP-1-SOP-2.1, CHEMICAL AND VOLUME CONTROL SYSTEM, PLANT STARTUP AND OPERATION.

4.2 IF charging flow control valve Q1E21FCV122 fails open and solid plant operations is in effect, THEN verify proper response of LP LTDN PRESS PK 145.

4.2.1 IF necessary to prevent an undesirable RCS pressure rise, THEN close CHG PUMPS TO REGENERATIVE HX Q1E21MOV8107 or MOV8108.

4.2.2 IF charging flow is isolated, THEN verify LP LTDN PRESS PK 145 closes.

5. WHEN the affected component(s) is restored to normal operation, THEN return charging to normal operation as follows:

5.1 IF charging flow control valve Q1E21FCV122 failed, THEN restore normal control of charging flow per Section 4.6.3 of FNP-1-SOP-2.1, CHEMICAL AND VOLUME CONTROL SYSTEM PLANT STARTUP AND OPERATION.

6. IF A PRIMARY COOLANT LEAK OR RUPTURE IS INDICATED, THEN PERFORM THE ACTIONS OF THE APPROPRIATE AOP OR EEP.

a) FNP-1-AOP-1.0, RCS LEAKAGE.

b) FNP-1-EEP-0, REACTOR TRIP OR SAFETY INJECTION

c) FNP-1-AOP-2.0, STEAM GENERATOR TUBE LEAKAGE

7. Notify appropriate personnel to determine and correct the cause of the alarm.
8. Refer to Technical Specifications LCOs 3.5.2 and 3.5.3, and Technical Requirements TRs 13.1.2, 13.1.3, 13.1.4, and 13.1.5.

References: A-177100, Sh. 232; D-175039, Sh. 2; U-176023; U-260610; U-264624; PLS Document; Technical Specifications

LOCATION DD1

D1	RCP SEAL INJ FLOW LO

SETPOINT: 6.7 GPM

ORIGIN:
1. RCP 1A Seal Water Injection Flow Transmitter (Q1E21FT0130-N)
2. RCP 1B Seal Water Injection Flow Transmitter (Q1E21FT0127-N)
3. RCP 1C Seal Water Injection Flow Transmitter (Q1E21FT0124-N)

PROBABLE CAUSE

NOTE: This annunciator has REFLASH capability.

1. All Charging Pumps stopped.
2. Improper setting on SEAL WTR INJECTION HIK 186.
3. Clogging seal injection filter.

AUTOMATIC ACTION

NONE

IMMEDIATE ACTION

1. IF A LOSS OF SEAL INJECTION FLOW HAS OCCURRED AND A LOSS OF COMPONENT COOLING WATER TO THE THERMAL BARRIER HEAT EXCHANGER HAS OCCURRED AND AT LEAST ONE METHOD OF SEAL COOLING CAN NOT BE IMMEDIATELY RESTORED, THEN
   a) MANUALLY TRIP THE REACTOR.
   b) STOP THE REACTOR COOLANT PUMPS.
   c) PERFORM THE ACTIONS REQUIRED BY FNP-1-EEP-0, REACTOR TRIP OR SAFETY INJECTION. (SEN 201)
2. DETERMINE THE CAUSE OF THE ALARM.
3. MONITOR RCP LOWER BEARING TEMPERATURES AND #1 SEAL LEAKOFF FLOWS.

CAUTION: No attempt to raise seal injection flow should be made if annunciator DC4, SEAL WTR INJ FLTR HI ΔP, is in alarm to prevent possible overpressurization and failure of a clogged seal injection filter.

4. IF SEAL INJECTION FLOW IS LOW AND ANNUNCIATOR DC4, SEAL WTR INJ FLTR HI ΔP, IS NOT IN ALARM, THEN RE-ESTABLISH PROPER INJECTION FLOW BY OPENING SEAL WTR INJECTION HIK 186.

5. IF OPERATION OF SEAL WTR INJECTION HIK186 IS ERRATIC AND OPERATION VIA THE BYPASS IS DESIRED, THEN REFER TO FNP-1-SOP-2.1, CHEMICAL AND VOLUME CONTROL SYSTEM PLANT STARTUP AND OPERATION, SECTION 4.16 FOR GUIDANCE.
6. CHECK THE ON-SERVICE SEAL INJECTION FILTER ΔP.

CAUTION: RCP's with #1 Seal Leakoff less than 2.5 gpm may develop lower bearing and seal temperatures that 2xceed 225°F within 1 to 2 hours following a loss of seal injection.

CAUTION: Long term operation of the RCP under loss of seal injection conditions increases the risk of a loss of all seal cooling incident if the CCW system supply to the RCP thermal barrier should also fail.

CAUTION: RCS water being cooled by the RCP thermal barrier contains particulate matter, since it is not filtered, which can have an impact on the long term operability of the RCP seals.

CAUTION: Particulate matter which will deposit in the seal package as the result of a loss of seal injection will be radioactive and will impact dose to received by workers during repair efforts.

SUPPLEMENTARY ACTION

1. IF a Loss of Seal Injection Flow has occurred, THEN;
   a) Ensure that RCP, Component Cooling Water inlet temperature remains below 105°F.
   b) Ensure that at least one Charging Pump is running.
   c) Carefully re-establish the Injection Water Flow, reducing the RCP Lower Bearing Temperatures at a maximum rate of 1°F per minute, using SEAL WTR INJECTION HIK 186, or by establishing flow via HIK186 bypass using FNP-1-SOP-2.1, CHEMICAL AND VOLUME CONTROL SYSTEM PLANT STARTUP AND OPERATION, Section 4.16 for guidance.

SUPPLEMENTARY ACTION

2. IF a Loss of Seal Injection Flow has occurred, THEN;
   a) Monitor lower bearing or seal water outlet temperatures of any operating RCPs paying particular attention to those RCPs with pre-event seal leakoffs of < 2.5 gpm.
      1. IF bearing or seal water outlet tmperature of any operating RCP reaches 190°F, and continues to rise, THEN initiate a controlled reactor shutdown using the guidance of FNP-1-UOP-3.1, POWER OPERATION or FNP-1-AOP-17.0, RAPID LOAD REDUCTION, as deemed necessary.
      2. WHEN the reactor is shutdown, THEN secure the affected RCP.
      3. WHEN RCP has come to acomplete stop as indicated by minimum RCS flow in affected loop, THEN close the 1A (B or C) RCP Seal Leakoff Q1E21HV8141A (B or C) for the affected pump.
      4. IF 1A or 1B RCP is secured, THEN close the pressurizer spray valve for the affected RCP (PK-444C for 1A RCP, PK-444D for 1B RCP).
   b) IF the bearing or seal water outlet temperature for any operating RCP reaches 225°F, THEN:
      1. Manually trip the reactor, and perform the next steps concurrently with FNP-1-EEP-0, REACTOR TRIP OR SAFETY INJECTION.
      2. Secure the affected RCP.
      3. WHEN RCP has come to a complete stop as indicated by minimum RCS flow in the affected loop, THEN close the 1A (B or C) RCP Seal Leakoff Q1E21HV8141A (B or C) for the affected RCP.
      4. IF 1A or 1B RCP is secured, THEN close the pressurizer spray valve for the affected RCP (PK-444C for 1A RCP, 44D for 1B RCP)

References: A-177100, Sh. 196; D-175039, Sh. 1 & 2; PLS Document; U-175985; U-176001; U-176031; U-258242. {CMT 0003153} {CMT 0005756} {CMT 0007558} {CR-1-2000-257}

LOCATION DE1

E1	REGEN HX LTDN FLOW DISCH TEMP HI

SETPOINT: 365°F

ORIGIN: Temperature Bistable TB-140 from Temperature Element (N1E21TE140-N)

PROBABLE CAUSE

1. Low Charging Flow.

AUTOMATIC ACTION

NONE

IMMEDIATE ACTION

CAUTION: If actual VCT level is low, refer to immediate action 4 for annunciator DF3. (SOER 97-1)

1. DETERMINE ACTUAL LETDOWN FLOW TEMPERATURE AS INDICATED BY TI 140 (REGEN HX OUTLET TEMP) ON THE MCB.
2. MONITOR CHARGING AND LETDOWN FLOWS AND TEMPERATURES.
3. DETERMINE THE CAUSE OF THE ALARM.
4. IF THE CAUSE IS DETERMINED TO BE A CHARGING SYSTEM MALFUNCTION, THEN PERFORM THE ACTIONS FOR ANNUNCIATOR WINDOW EA2, CHG HDR FLOW HI-LO.

SUPPLEMENTARY ACTION

1. Refer to FNP-1-SOP-2.1, CHEMICAL AND VOLUME CONTROL SYSTEM PLANT STARTUP AND OPERATION.
2. IF operating at a minimum Charging Flow rate, THEN;
   a) Verify that the Letdown Flow is being cooled below 380°F.
   b) Adjust Charging or Letdown Flow, if required, to lower the temperature.
3. Correct the cause of the alarm and return the system to normal as soon as possible.

References: A-177100, Sh. 201; D-175039, Sh. 1; U-175992; PLS Document

26. 024AK2.04 001/1/2/EMERG BOR/MEM 26./2.5/NEW/FA011005/RO/

Given the following conditions:

- Unit 1 is in Mode 5 with RCS temperature at 165°F.
- 1A RHR loop is being used for cooldown.
- 1B BAT pump is on service.
- 1A BAT is on recirc.
- 1A CHG pump is on service.
- 1B and1C CHG pumps are electrically tagged out.
- The supply breaker to 600V MCC 1B has tripped.

The OATC has determined that an Emergency Boration is required due to the Shutdown Margin is less than required IAW STP-29.2, Shutdown Margin Calculation (Tavg <547°F or before the initial criticality following refueling).

Which one of the following emergency boration flowpaths is **Immediately** available to restore the Shutdown Margin?

A. Borate using the 1A CHG pump and the RWST.

B. Borate using the 1A RHR pump and the RWST.

C. Borate using the 1B BAT pump and 1B BAT.

D. Borate using the 1A BAT pump and 1A BAT.

A. Correct -**Borate using the 1A CHG pump and the RWST.**
This is the only flow path available in this configuration and this IAW AOP-27 guidance.

B. Incorrect - The RHR system is not an option in AOP-27. However, in this mode, it seems to be a good alternative since RHR is in the cooldown lineup, 2 valve swaps would give a flowpath from the RWST to the RCS.

C. Incorrect - With the other BAT on recirc, this would make this BAT the only available tank and the MCC that feeds the pump has no power.

D. Incorrect - This BAT tank is not available when on recirc.

024AK2.04 - Emergency Boration - Knowledge of the interrelations between the Emergency Boration and the following: Pumps

Analyze plant indications to determine the successful completion of any step in AOP-27.0, Emergency Boration (OPS52521A06).

Evaluate plant conditions to determine if any system components need to be operated while performing AOP-27.0, Emergency Boration (OPS52521A05).

AOP-27.0, EMERGENCY BORATION
STEP AND BRANCHING SUMMARY

1. Start a boric acid transfer pump ..... align RWST/Step 3
2. Align normal emergency boration flow path
3. Verify at least one CHG PUMP-STARTED
4. Establish adequate letdown
5. Verify emergency boration flow path ..... Attachment 1
6. Check emergency boration complete ..... Step 8
7. Stop running boric acid transfer pump ..... align VCT/Step 10
8. IF normal emergency boration flow path aligned,
   THEN secure normal emergency flow path
9. Direct Chemistry to sample RCS for boron concentration ...
10. Align reactor makeup system
11. Go to procedure and step in effect

AOP-27.0, Symptoms

An emergency boration is required to ensure an adequate SDM is established or maintained if it has been determined to be less than that required by Technical Specifications or TRM, if it is being challenged by an unexplained or uncontrolled reactivity addition, inadvertent cooldown below 525°F with critical boron established, or by control rods being positioned below the RIL. Actuation of the control rod bank position lo-lo annunciator warns the operators that control rods are at the RIL.

Start a Boric Acid Transfer Pump

In order to supply a concentrated boric acid solution to the suction of the charging pumps, once the flow path is aligned, a boric acid transfer must be started. The normal boric acid system alignment has one boric acid tank (BAT) on service and the other on standby. Both boric acid pumps are aligned to the on-service tank and either may be started in this first step. If, however, the off-service or standby BAT is on recirc, its associated pump will not be available for use in establishing an emergency boration.

If a boric acid pump cannot be started and aligned to supply boric acid to the suction of the charging pumps, then the suction of the charging pumps should be shifted to the RWST. This alignment involves opening the RWST to charging pump valves, LCV-115B and D, and closing the volume control tank (VCT) outlet valves, LCV-115C and E.

NOTE

If emergency boration is being aligned to the manual emergency boration flow path, THEN consideration should be given to starting a boration through the blender via FCV113A & B in accordance with SOP-2.3, CHEMICAL AND VOLUME CONTROL SYSTEM REACTOR MAKEUP CONTROL SYSTEM, while personnel are being dispatched to locally open Q1E21V185.

This will provide some amount of negative reactivity during the time personnel are responding.

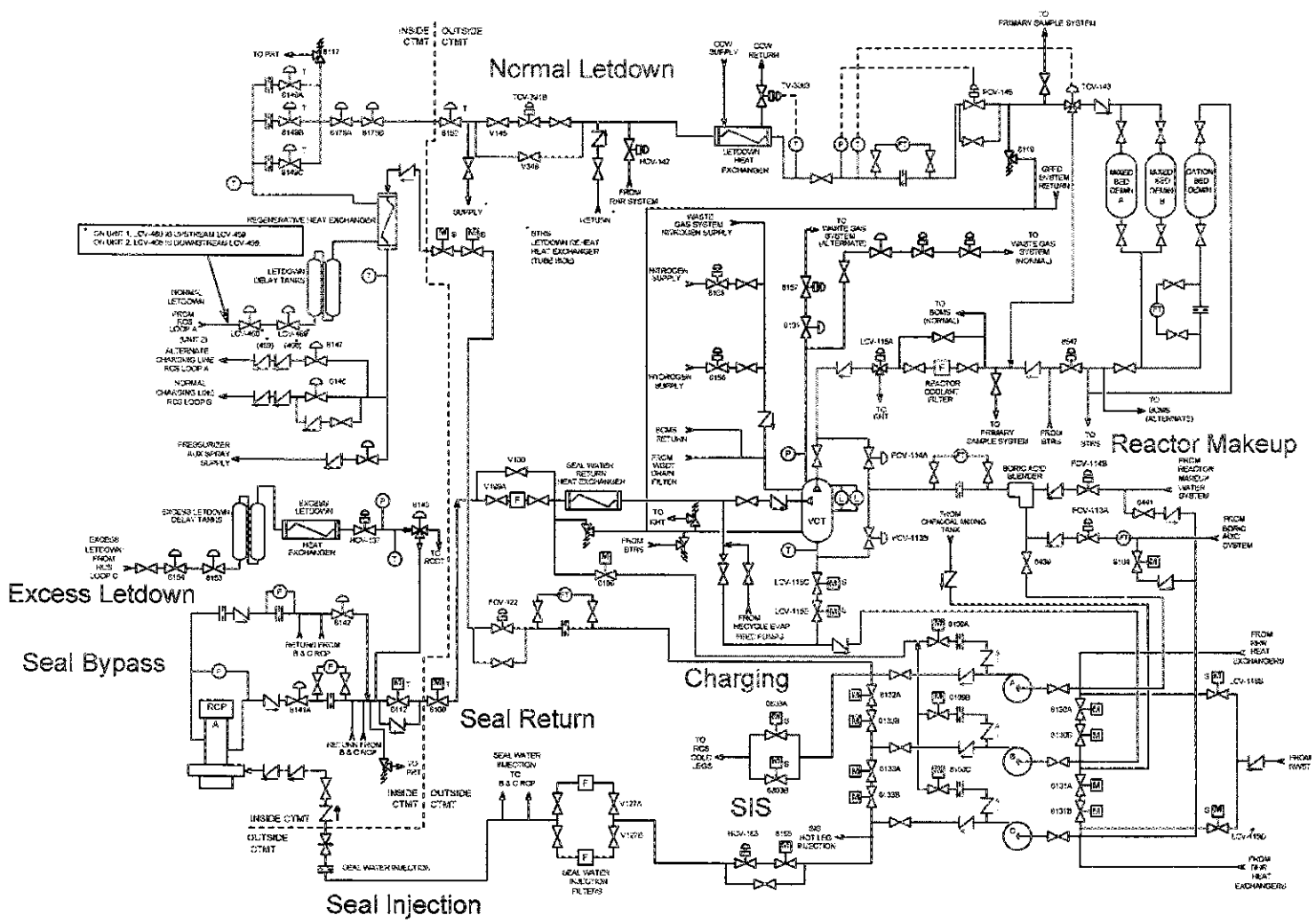

Chemical and Volume Control System
Figure 1

FARLEY NUCLEAR PLANT
SURVEILLANCE TEST REVIEW SHEET

SURVEILLANCE TEST NO. FNP-1-STP-29.2	TECHNICAL SPECIFICATION REFERENCE SR 3.1.1.1
TITLE SHUTDOWN MARGIN CALCULATION (TAVG <547°F OR BEFORE THE INITIAL CRITICALITY FOLLOWING REFUELING)	MODE(S) REQUIRING TEST: 3, 4, 5; (When TAVG <547°F or before the criticality following refueling)

TEST RESULTS (TO BE COMPLETED BY TEST PERFORMER)

PERFORMED BY _____ DATE/TIME _____

COMPONENT OR TRAIN TESTED (if applicable) _____

[ ] ENTIRE STP PERFORMED [ ] FOR SURVEILLANCE CREDIT

[ ] PARTIAL STP PERFORMED: [ ] NOT FOR SURVEILLANCE CREDIT

REASON FOR PARTIAL: _____

TEST COMPLETED: [ ] Satisfactory [ ] Unsatisfactory

[ ] The following deficiencies occurred:

_____

_____

[ ] Corrective action taken or initiated:

_____

_____

_____

SHIFT SUPPORT SUPERVISOR REVIEW

REVIEWED BY _____ DATE _____

[ ] Procedure properly completed and satisfactory

[ ] Comments: _____

_____

TECHNICAL GROUP
REACTOR ENG. REVIEW REVIEWED BY _____ DATE _____

[ ] Satisfactory and Approved
[ ] Comments: _____

_____

FARLEY NUCLEAR PLANT
UNIT 1
SURVEILLANCE TEST PROCEDURE STP-29.2

SHUTDOWN MARGIN CALCULATION (TAVG <547 °F OR BEFORE THE INITIAL CRITICALITY FOLLOWING REFUELING)

1.0 Purpose

To determine the shutdown margin at TAVG < 547°F OR before the initial unit startup following refueling.

2.0 Acceptance Criteria

2.1 The shutdown margin shall be greater than OR equal to the value specified in the COLR: 1.77% Δk/k (1770 pcm) when RCS temperature is greater than 200°F.

2.2 The shutdown margin shall be greater than OR equal to the value specified in the COLR: 1.0% Δk/k (1000 pcm) when RCS temperature is less than OR equal to 200°F.

2.3 The RCS boron concentration shall be greater than curve 61a when RHR is in operation.

NOTE: Asterisked steps (*) are those associated with Acceptance Criteria.

3.0 Initial Conditions

_____ 3.1 The revision of this procedure has been verified to be the current revision and correct unit for the task. (OR 1-98-498)

_____ 3.2 The plant is in Mode 3, 4, 5 or proceeding to Mode 5.

_____ 3.3 TAVG is less than 547°F OR SDM is being performed before the initial startup following refueling.

Shutdown Margin Calculations

D.1 Shutdown reactivity variance from required Shutdown Margin

[( )_____ + (–)_____ – (–)_____] = ( )_____pcm
(C.8) (Boron) (C.5) (Xenon) (C.9.b) (Stuck Rod Penalty)

*D.2 Shutdown Margin (SDM)

[( )_____ pcm + (–)_____pcm] = ( )_____pcm
(D.1) (1770 if >200°F, 1000 if ≤ 200°F)

Total Shutdown Margin SDM

ACCEPTANCE CRITERIA:	**1**	**The shutdown margin shall be greater than or equal to 1.77% Δk/k (1770 pcm) when RCS temperature is greater than 200°F.**
	2	**The shutdown margin shall be greater than or equal to 1.0% Δk/k (1000 pcm) when RCS temperature is less than or equal to 200°F**

*D.3 IF on RHR, THEN RCS C_B is greater than required C_B from Curve 61a. (N/A if not on RHR)

RCS Boron _____ppm – Curve 61a Required C_B_____ppm = _____ppm
(B.3) (C.1.b)

ACCEPTANCE CRITERIA:	**IF on RHR, THEN existing boron concentration is > boron concentration required for boron dilution per Curve 61a.**

*D.4 IF the acceptance criteria in D.2 or D.3 is not met, THEN emergency borate per FNP-1-AOP-27.0, EMERGENCY BORATION, to establish the required shutdown margin.

Date:_____ Performed by:_____

Date:_____ Verified by:_____

TABLE 3
POWER SUPPLIES

LOAD	SUPPLY
Boric Acid Transfer Pump A	600V MCC A
Boric Acid Transfer Pump B	600V MCC B
Agitator	208V MCC D

5.30.1 IF the steam generators are to be placed in wet layup, THEN adjust the steam generators, feedwater/condensate system for wet layup conditions by:

____ / 5.30.1.1 Perform FNP-1-STP-22.12, MOTOR DRIVEN AUXILIARY FEEDWATER CHECK VALVES FLOW VERIFICATION, prior to filling steam generators.

____ / 5.30.1.2 Remove the SGBD System from operation per FNP-1-SOP-16.1, STEAM GENERATOR BLOWDOWN PROCESSING SYSTEM.

____ / CHEM 5.30.1.3 Chemistry has added the necessary chemicals to each system as required.

____ / 5.30.1.4 Fill the steam generators to wet layup conditions per FNP-1-SOP-16.3, STEAM GENERATOR FILLING AND DRAINING.

____ / 5.30.1.5 IF required by the Chemistry Department, THEN maintain the reactor coolant system temperature between 240°F and 260°F for a minimum of 3 hours for mixing of the wet layup chemicals.

____ / CHEM 5.30.1.6 Recirculate the feedwater/condensate system until the system is homogeneous (No temperature hold is applied to this step).

NOTE: Mode 5 entry requires two trains of RHR to be operable and one train of RHR to be in service. Three filled and vented RCS loops, capable of being pressurized AND at least two Steam Generators having levels ≥ 75 % wide range indication (with an available source of makeup water) may be substituted for one RHR loop. (Tech. Spec. 3.4.7)

____ / 5.31 Stop the cooldown ~ 210°F and perform the following:

____ / 5.31.1 The Shift Supervisor has verified the note above concerning Technical Specification 3.4.7 is met AND a review of LCOs for Mode 5 entry has been completed. **{CMT 10273}**

NOTE: The following step is intended to ensure necessary fire watches are established for containment penetration breaches since containment is a fire barrier.

____ / 5.31.2 Coordinate with the fire administrator to initiate appropriate fire watches in rooms containing containment penetrations.

____ / 5.31.3 With the Shift Supervisor's permission, recommence the RCS cooldown to < 200°F to enter Mode 5.

5.32 WHEN RCS temperature is reduced below 200°F, THEN complete the following:

CAUTION: Ensure that all charging pumps except the one designated to be the operable pump are racked out prior to going below 180°F.

NOTE:
- **Steps 5.32.1 through 5.32.11 may be performed concurrently.**
- **Performance of certain sections of STP-158, REACTOR COOLANT SYSTEM PRESSURE ISOLATION VALVE LEAK TEST, by Engineering Support will require isolating an individual train of RHR. Ensure compliance with Technical Specifications and actions required for inoperable Low Temperature Overpressure Protection System (3.4.12) and an inoperable train of RHR (3.4.7) when applicable. Three filled and vented RCS loops, capable of being pressurized AND at least two Steam Generators having levels ≥ 75 % wide range indication (with an available source of makeup water) may be substituted for one RHR loop.**

____ / 5.32.1 Notify Facilities to install covers over the ECCS sump suction screens. (LER 97-012)

____ / 5.32.2 IF the purpose of this shutdown has been for refueling OR flow has been put through the hot leg injection lines, THEN perform the following:

____ / 5.32.2.1 A pre-job briefing is held by Engineering Support and the Shift Supervisor concerning performance of FNP-1-STP-158.0, REACTOR COOLANT SYSTEM PRESSURE ISOLATION VALVE LEAK TEST. During this briefing, management's expectations of closely monitoring RCS temperature to prevent a mode change due to temperature rise and the following course of action to take if temperature control becomes a problem will be discussed.

a) Station or designate personnel for the purpose of operating the RHR loop suction valve power supply breakers in the event the off service train of RHR is required to be placed in service.

b) Secure up to two of the three RCPs as necessary to control temperature. IF possible, THEN maintain one RCP running, preferably B RCP.

c) IF temperature control is still a problem after securing two RCPs, THEN notify the test coordinator to secure the test lineup AND place the train of RHR, which was being tested, in service.

____ / 5.32.2.2 Coordinate with ES to perform FNP-1-STP-158, REACTOR COOLANT SYSTEM PRESSURE ISOLATION VALVE LEAK TEST.

A. Purpose

This procedure provides actions to emergency borate the RCS when a reactor trip is not required.

This procedure is applicable in Modes 1, 2, 3, 4, 5 and 6.

B. Symptoms or Entry Conditions

I. This procedure is entered when emergency boration is required by any of the following:

a. Shutdown margin is determined to be less than required by Technical Specifications (or the TRM)

b. Unexplained or uncontrolled reactivity insertion

c. Actuation of CONT ROD BANK POSITION LO-LO annunciator FE2

d. Inadvertent cooldown below 525°F with critical boron concentration established

Step	Action/Expected Response	Response NOT Obtained
___ 1	Start a boric acid transfer pump. BATP [] 2A [] 2B	1 Perform the following. 1.1 Align charging pump suction to RWST. RWST TO CHG PUMP [] Q2E21LCV115B open [] Q2E21LCV115D open VCT OUTLET ISO [] Q2E21LCV115C closed [] Q2E21LCV115E closed 1.2 Proceed to step 3.

NOTE: IF emergency boration is being aligned to the manual emergency boration flow path, THEN consideration should be given to starting a boration through the blender via FCV113A & B in accordance with FNP-2-SOP-2.3, CHEMICAL AND VOLUME CONTROL SYSTEM REACTOR MAKEUP CONTROL SYSTEM, while personnel are being dispatched to locally open Q2E21V185.

___ 2	Align normal emergency boration flow path. EMERG BORATE TO CHG PUMP SUCT [] Q2E21MOV8104 open	2 Align manual emergency boration flow path. BORIC ACID TO BLENDER [] Q2E21FCV113A open MAN EMERG BORATION [] Q2E21V185 open (100 ft. AUX BLDG rad-side chemical mixing tank area)
___ 3	Verify at least one CHG PUMP - STARTED.	

___Page Completed

Step	Action/Expected Response	Response NOT Obtained
___ 4	Establish adequate letdown.	
	4.1 Verify 45 gpm letdown orifice - IN SERVICE. LTDN ORIF ISO 45 GPM [] Q2E21HV8149A open	
	4.2 Verify at least one 60 gpm letdown orifice - IN SERVICE. LTDN ORIF ISO 60 GPM [] Q2E21HV8149B open [] Q2E21HV8149C open	
___ 5	Establish adequate charging flow. • <u>IF</u> boration is from boric acid storage tank, <u>THEN</u> verify charging flow - GREATER THAN 40 gpm. <u>OR</u> • <u>IF</u> boration is from the RWST, <u>THEN</u> verify charging flow - GREATER THAN 92 gpm.	

___Page Completed

Step	Action/Expected Response	Response NOT Obtained
___ 6	Verify emergency boration flow adequate. • IF normal emergency boration flow path aligned, THEN check emergency boration flow greater than 30 gpm. BORIC ACID EMERG BORATE [] FI 110 OR • IF manual emergency boration flow path aligned, THEN check boric acid flow greater than 30 gpm. MAKEUP FLOW TO CHG/VCT [] BA FI 113 OR • IF boration is from the RWST, THEN verify charging flow - GREATER THAN 92 gpm.	6 Verify boration flow path using ATTACHMENT 1.
___ 7	Direct Chemistry to secure the zinc addition system (ZAS).	

___Page Completed

Step	Action/Expected Response	Response NOT Obtained
8	Check emergency boration complete.	
8.1	Check reactor - NOT CRITICAL.	8.1 Perform the following. 8.1.1 <u>IF</u> control rod insertion below rod insertion limit, <u>THEN</u> continue emergency boration and return to step 5. <u>IF NOT</u>, proceed to RNO step 8.1.2. 8.1.2 <u>IF</u> emergency borating as a result of inoperable (untrippable) control rods per Tech. Spec. 3.1.3.1 (3.1.4.A), <u>THEN</u> verify shutdown margin greater than Technical Specification requirement using FNP-2-STP-29.5, SHUTDOWN MARGIN CALCULATION IN MODES 1 AND 2 (TAVG ≥ 547°F) WITH INOPERABLE OR IMMOVABLE CONTROL ROD(S) (WITH UNTRIPPABLE CONTROL ROD(S)). <u>IF NOT</u>, proceed to step 9. 8.1.3 <u>WHEN</u> shutdown margin greater than Technical Specification requirement, <u>THEN</u> proceed to step 9. 8.1.4 Continue emergency boration and return to step 5.

Step 8 continued on next page.

___Page Completed

27. 025AK2.02 001/1/1/LOSS OF RHR/C/A 3.2*/3.2/NEW/FA011005/RO/

Given the following:

- RCS temperature is 118°F.
- RCS level is at mid loop and indicates 123' 3" preparing for vacuum refill.
- 1B RHR pump is running with indicated flow of 2300 gpm.

A leak develops in the RHR system and RCS level begins to drop. 1B RHR pump has fluctuating pump amps and flow oscillations, and a possible loss of the 1B RHR pump is imminent. Which one of the following is the **lowest flow rate** for the RCS level given that would prevent a loss of RHR?

REFERENCE PROVIDED

A. RHR flow is 1500 gpm and RCS level is 122' 7".

B. RHR flow is 1700 gpm and RCS level is 122' 9".

C. RHR flow is 2000 gpm and RCS level is 122' 10".

D. RHR flow is 2300 gpm and RCS level is 122' 8".

REFERENCE PROVIDED FIGURE 1 of AOP-12

A. Incorrect - This is the lowest flow but is below the line.

B. Correct- **RHR flow is 1700 gpm and RCS level is 122' 9".**
Figure 1 has a line on it and it has to be determined what the line means. If the flow VS. level is above the line, then there is no cavitation. Below the line indicates cavitation. Figure 1 shows this to be just above the line and it is the lowest flow rate of the 2 above the line.

C. Incorrect- This is above the line but is NOT the lowest flow rate given.

D. Incorrect- This is below the line and it is not the lowest.

025AK2.02 Loss of Residual Heat Removal System (RHRS) - Knowledge of the interrelations between the Loss of RHRS and the following:
LPI or Decay Heat Removal /RHR pumps.

Describe how an operator would determine if actual reactor coolant system (RCS) level is sufficient to prevent vortex formation (Generic Letter 88-17)(OPS52520L10).

FIGURE 1

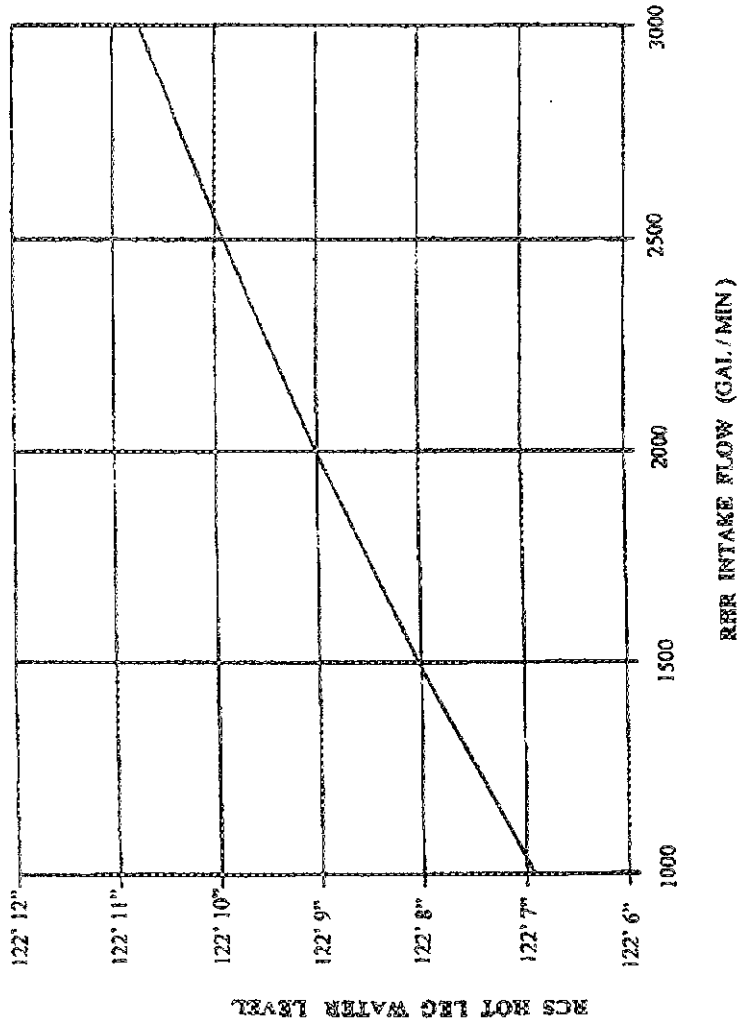
RCS HOT LEG WATER LEVEL
122' 12"
122' 11"
122' 10"
122' 9"
122' 8"
122' 7"
122' 6"
1000
1500
2000
2500
3000
RHR INTAKE FLOW (GAL / MIN)

FNP-2-AOP-12.0	RESIDUAL HEAT REMOVAL SYSTEM MALFUNCTION	Revision 16

A. **Purpose**

This procedure provides actions for response to a malfunction of the RHR system.

This procedure is applicable in modes 4, 5 and 6.

B. **Symptoms or Entry Conditions**

I. This procedure is entered when a malfunction of the RHR system is indicated by any of the following:

a. Trip of any operating RHR pump

b. Excessive RHR system leakage

c. Evidence of running RHR pump cavitation

d. Closure of loop suction valve

e. High RCS or core exit T/C temperature

Step	Action/Expected Response	Response NOT Obtained

****

CAUTION: Continued operation of an RHR PUMP experiencing severe cavitation will result in pump damage.

****

NOTE:

- Erratic pump parameters (flow, suction pressure, discharge pressure, noise level, amps, etc.) are indication of pump cavitation.
- Rapid flow adjustments may cause more severe pump cavitation.
- FIGURE 1 provides minimum RCS level versus RHR flow to prevent cavitation due to vortexing.
- Technical Specification 3.9.8.1 (3.9.4 and 3.9.5) action requirements are applicable with RHR flow rate less than 3000 gpm.

___	3	**Check RHR PUMPs - NOT CAVITATING.**	3 Perform the following. 3.1 Reduce RHR flow rate to eliminate cavitation. 3.2 IF cavitation NOT eliminated, THEN stop affected RHR PUMP, AND go to Step 8.0.

__ Page Completed

AOP-12.0, RESIDUAL HEAT REMOVAL SYSTEM MALFUNCTION

STP-18.4, CONTAINMENT CLOSURE

INTRODUCTION

The primary objective of AOP-12.0 is to restore RHR flow. In addition, other means of core cooling are established and protective measures are taken (e.g., containment closure and evacuation) while performing actions to reestablish RHR flow. These actions are accomplished in the performance of the following high-level action categories:

- Check If RHR Pumps Should Be Stopped
- Address Containment Related Concerns
- Establish Alternate Means of Decay Heat Removal
- Establish Support Conditions and Restore RHR

Check If RHR Pumps Should Be Stopped

If air is ingested into the suction of the RHR pumps, the pumps are likely to start cavitating. The symptoms of cavitation are typically erratic behavior of pump current (oscillations between high amperage values and low amperage values), erratic behavior of pump flow, and excessive pump noise. Pump suction pressure will also oscillate. If any plant personnel are in the immediate vicinity of the pump, loud audible noises can typically be heard when air ingestion starts. If no actions are taken, damage to the pump may occur due to vibration and the pump may eventually seize and stop running. As soon as the operator is aware that air ingestion or cavitation is occurring, actions should be initiated to protect the RHR pump. A reduction of flow may stop the air ingestion and pump cavitation. Inadequate level in the RCS hot leg will also result in air ingestion and pump cavitation. The operator should increase RCS level to ensure adequate level exists in the hot leg for continued pump operation. RHR pump flow during normal long term operation is 3000 gpm minimum and should be maintained >2750 gpm to minimize thrust bearing wear. Reducing flow to stop cavitation is a short term condition and does not have a minimum flow rate

associated with it other than miniflow protection. When flow is reduced to stop cavitation, then RCS level is restored, and the RHR flow rate is raised to the longer term RHR minimum of 3000 gpm per running pump. If the RHR pump continues to cavitate at reduced flow, then the operator should immediately stop the RHR pump.

Address Containment Related Concerns

When the RHR system is lost, any non-essential personnel in the containment building should be evacuated. As an additional precautionary measure, those essential personnel entering the containment building to perform recovery or contingency actions may need to use respirators and don protective clothing due to the possibility of increasing radiation levels.

Since RHR cooling has been lost, actions must be initiated to address the possibility of core uncovery and subsequent fuel damage due to RCS inventory boil-off. Since two of the three fission product barriers are open (the RCS and the containment), actions must now be taken to close the containment and provide a barrier to the release of radioactive material should the event proceed to a core damage situation.

The time available between the loss of RHR cooling, core uncovery, and core damage varies depending on plant conditions at the time of event initiation. For adverse RCS configurations, (e.g., a significant cold leg opening with the hot legs isolated), the time to core uncovery could be as short as 30 minutes. Procedurally, containment closure should be established prior to entry into this condition. For more favorable RCS configurations (e.g., the hot legs vented), but shortly after plant shutdown, the core uncovery time may be two hours. Longer times after shutdown, and/or especially favorable RCS configurations (e.g., water in secondary side of at least two of the SGs), may increase the available core uncovery time up to four hours or more. Curves of decay heat versus time after shutdown are shown on Figures 1 and 2. Curves of the time required to reach saturation conditions (boiling) for various water volumes available to accept decay heat are shown on Figures 3 and 4.

In any event, containment closure must be accomplished before potential core damage is predicted to occur. Therefore, the containment must always be in a condition

If the indicated RCS level is below the bottom of the loops, then it is difficult to accurately estimate the inventory remaining prior to core uncovery. The operator should initiate makeup to the RCS at a rate adequate to compensate for potential boil-off, which can be as much as 90 gpm, and replenish RCS inventory. If a large hot side opening exists with an unobstructed flow path, the operator should refill the RCS with charging pumps at maximum available flow.

An undesirable situation occurs when there is a large cold side opening and the loop with the opening is isolated on the hot side. The cold side opening could be caused by removal of a SG manway for SG tube inspection or maintenance, removal of a cold leg check valve, or failure of a SG nozzle dam. The loop would be considered isolated due to installation of the SG nozzle dams. If a large hot side vent were not available to limit pressurization of the hot side, prolonged core uncovery would occur starting within several minutes after boiling starts (i.e., as early as 10 minutes). For this case, hot leg (or upper plenum) injection from one charging pump is necessary to prevent or limit core uncovery. Hot leg (or upper plenum) injection should be initiated prior to or within minutes after boiling starts (possibly as early as 10 minutes) to avoid significant loss of RCS inventory. Hot leg (or upper plenum) injection would also be required if SG nozzle dams are installed in all SGs and a cold side dam were to fail first due to the increased RCS pressure resulting from RCS boiling.

Once air has been ingested into the RHR system, it is necessary to purge the air from the lines in order to reestablish normal system operation. The air entrainment is the result of vortexing at the RHR suction connection to the hot leg. Typically, air ingestion into the running RHR pump should not affect the standby RHR pump unless both RHR pumps were in operation. Due to plant layout (e.g., a long horizontal piping run), a significant amount of air may be trapped in the RHR inlet piping and it could take over one hour for the air to bubble back into the RCS. If the RHR pumps are needed before complete venting is accomplished, the RCS level should be increased to the top of the RCS hot legs and one RHR pump should be started at high flow rates to sweep the air through the pump. Caution must be exercised because if too much air is left in the piping, this method has the potential of causing pump cavitation and pump damage.

Once adequate level has been restored to the RCS and the RHR pumps have been vented, the operator can restart one RHR pump to restore cooling to the RCS water. Prior to the actual start of the pump, the operator should be aware of the RCS level vs. RHR flow limitations (See Figure 7) to prevent the recurrence of vortexing and air entrainment. Also, starting an RHR pump may result in an RCS level decrease due to shrink or void collapse. It may be necessary to add makeup to the RCS to sustain RHR pump operation. To restart one RHR pump, the operator would typically close the RHR heat exchanger flow control valves and start the pump on miniflow and then gradually increase the RHR flow until the desired flow rate is achieved.

If the operator is successful in restoring RHR flow, then AOP-12.0 can be terminated and the operator can return to normal operating procedures for the condition that the plant was in (plant draindown, etc.). If the operator is not successful in restoring RHR flow, then he should start trending core exit thermocouple temperatures and implement any alternate actions for cooling the RCS (e.g., bleed and feed, feed and spill, cooling) while continuing efforts to return RHR to service.

PROCEDURE DETAILED

Purpose

AOP-12.0 provides actions for malfunction of RHR system in modes 4 through 6. RHR is only aligned to the RCS in these modes.

Symptoms or Entry Conditions

AOP-12.0 has five specific conditions for entry: (1) operating RHR pump trip, (2) excessive leakage, (3) indication of pump cavitation, (4) closure of loop suction valves, (5) high RCS or core exit T/C temperature. Figure 5 shows the flowpath for entry into AOP-12.0 and the initial action steps.

Cautions Before Step 1.0

A caution addresses:

- Severe cavitation on an isolated suction may cause pump damage. (As discussed earlier, pumps operating with large quantities of ingested air can be damaged within a few minutes and should be tripped to prevent failure.)
- There is a caution that alerts the operator of the effects of loss of RHR on letdown. Normally on RHR the majority of letdown flow is via the low-pressure letdown system, which can be aligned to either train. In this mode, the RHR pump is the driving force for letdown flow and its loss will significantly reduce letdown. If letdown is lowered, then charging flow must be adjusted to control RCS level.
- If the pressurizer is filled to 100%, a loss of nozzle dam due to the head of water will occur.

Notes Before Step 1

Actions in this procedure for restoring RHR pumps assume electrical power is available. During loss of electrical power conditions, AOP-5.0, Loss of A or B Train Electrical Power, provides actions for restoration of power, which should be performed in addition with continuing with this procedure.

The RHR loop suction valves will be deenergized if RCS Tavg is less than 180°F. The power supplies for the MOVs are also given.

Check RHR Loop Suction Valves Open

The loop suctions are checked open, and, if closed, the associated pump is stopped. Check at least one RHR pump started. If no RHR pump running, proceed to step 8; steps 1 through 7 check to see if an RHR pump should be stopped.

Check RHR Pumps Not Cavitating

The fastest way to attempt to stop cavitation is to decrease flow. This is accomplished by adjusting the RHR heat exchanger discharge and bypass valves. The notes preceding the step refer the operator to a Figure of a Flow versus Level Curve to Minimize Vortexing), (See Figure 7 in this text.) which informs him that rapid adjustment could

increase cavitation and reminds him of the Tech Spec minimum RHR flow of 3000 gpm during dilution evolutions.

Check RCS Level – Adequate

Instructions are given with appropriate notes and cautions to raise RCS level. Increasing RCS level will allow flow to be restored to normal value of 3000 gpm total to the RCS and will aid in stopping any cavitation that is still occurring. There are two cautions associated with this action. The first caution reminds the operator that increases in RCS pressure will cause RCS indicated level to increase if indication is not pressure compensated. This means that indicated level must be compensated by subtracting 1 ft for every .5 psi positive pressure in the RCS. This should normally not be a problem since the tygon hose and RCS level transmitter are usually vented back to the pressurizer, and pressure has no effect on the narrow range level indicators. The second caution reminds the operator that adding unborated water to the RCS may cause an inadequate shutdown margin.

Several notes establish maximum level for certain plant conditions. Maximum level should be limited as follows:

123'4" If personnel in the channel heads without nozzle dams installed

123'9" If primary manways removed and nozzle dams are not installed

123'9" If seal injection not established and RCPs are not backseated (prevents flushing unfiltered RCS water through the seals to minimize chance of seal failure)

124'0" If safety injection check valves are disassembled

Level is raised by aligning the Technical Requirements Manual boration flow path. Level should be raised to a minimum of 123'3", but the higher the level, the less the chance of cavitation occurring.

Check RHR System - Not Leaking

The RNO for this step states, "Isolate RHR leakage." This also implies leakage from any system that is directly connected to the RHR system, which could be the source of inventory loss from the RCS. If the source of leakage cannot be identified, then consideration should be given to isolating both trains of RHR until the leakage source can be

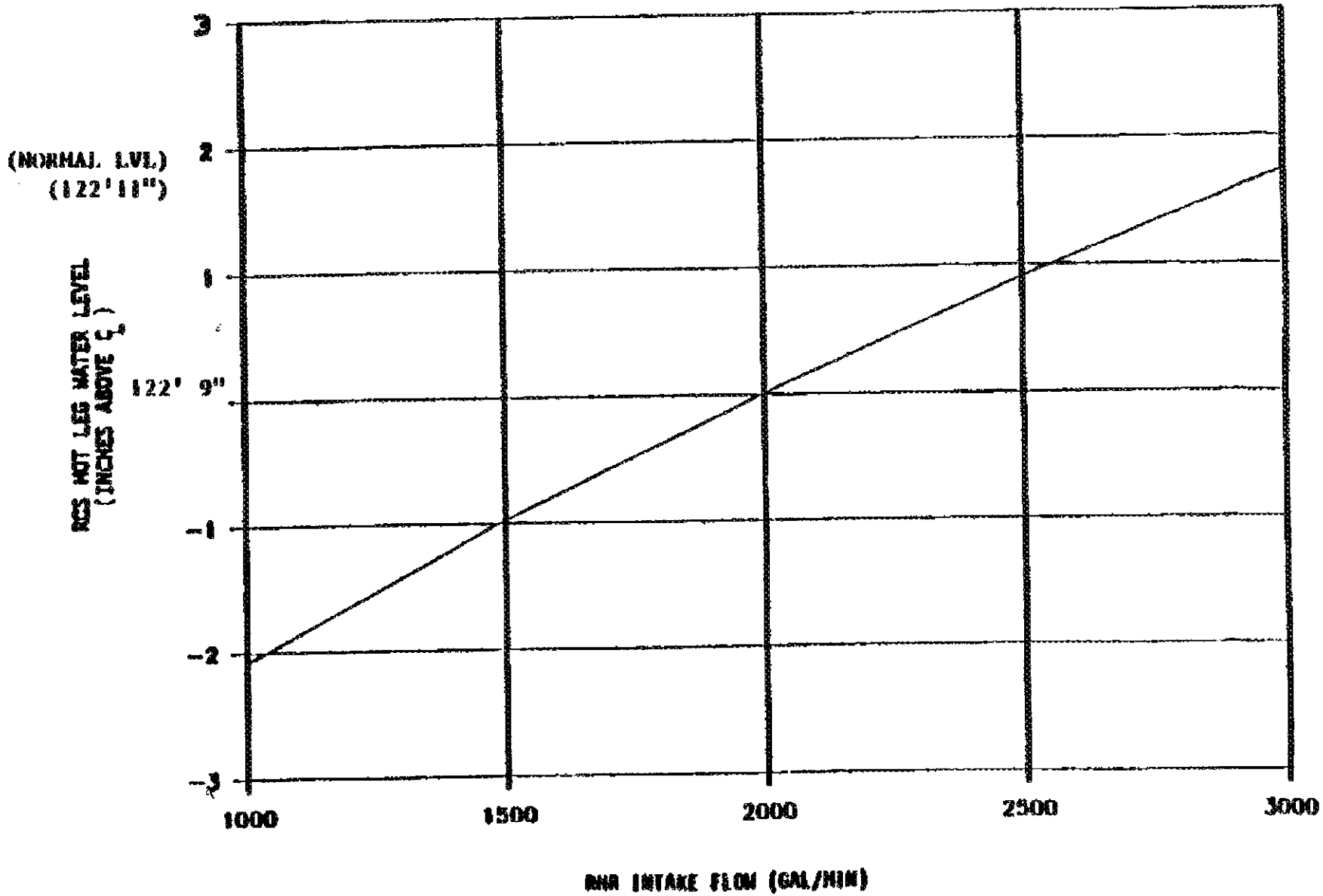

Required RCS Water Level to Minimize Vortexing
UOP-4.3

Figure 7

28. 026A4.05 001/2/1/CS/MEM 3.5/3.5/BANK/FA011005/RO/

A steamline break has occurred and the containment spray system has actuated. In order to close MOV-8820A and B, CS pump to spray header isolation valves, and have them remain closed, what **minimum** action must the operator take prior to closing the valves?

A. Reset the Phase B actuation signal by depressing a pair of reset pushbuttons on the MCB.

B. Wait one minute since the open signal is only present for one minute after the valves open.

C. Reset the containment spray actuation signal by depressing a pair of reset pushbuttons on the MCB.

D. Reset both the containment spray actuation signal and the Phase B actuation signal by depressing 2 sets of reset pushbuttons on the MCB.

OPS-52102C

A. Incorrect – Phase B is a containment isolation signal and does not open any valves including MOV8820A/B

B. Incorrect – If the CS actuation signal is not reset then the valves will roll back open

C. Correct – **Reset the containment spray actuation signal by depressing a pair of reset pushbuttons on the MCB.**
P signal or CS actuation opens this valve and remains Sealed in with an R/L logic and is reset with 2 Pushbutttons on the MCB

D. Incorrect – this is not the min. since Phase B does not need to be reset

A containment isolation phase B and containment spray actuation can be manually initiated from the safeguards panel. There are four PHASE B CTMT ISO CS ACTUATION switches. These switches are grouped in two sets of two switches each. Simultaneously placing both switches in a set in the ACTUATE position will cause a manual containment phase B isolation and containment spray actuation signal. There are four reset push buttons on the safeguards panel--two for containment spray (train A and train B) and two for containment isolation phase B (train A and B). All four push buttons must be momentarily depressed to clear the containment spray actuation and containment isolation phase B signals.

026A4.05 Ability to manually operate and/or monitor in the control room:
Containment spray reset switches

Explain the purpose and operation including the design features and functions, capacities, and protective interlocks of the following major components associated with the Containment Spray and Cooling System (OPS40302D02):
Containment Spray Pump to Spray Header Isolation Valves (MOV-8820A and B)

List the automatic actions associated with the Containment Spray and Cooling System components and equipment during normal and abnormal operations including (OPS40302D07):
• Normal control methods
• Automatic actuation including setpoint (example SI, Phase-B, LOSP) and the effect of selecting the containment cooler control to local.

CS&COOL-40302D07 #14

the high-1 setpoint on 2/3 instruments, a safety injection occurs as indicated by the CTMT PRESS HI-1 RX TRIP SI alarm.

There are containment pressure indications on the MCB.

Containment Isolation Phase A (Figure 35)

A containment isolation phase A signal closes various valves in lines that penetrate containment. A safety injection or manual switch operation will cause containment isolation phase A. A containment phase A isolation will also cause a containment ventilation isolation.

There are two containment isolation phase A switches, one on the safeguards panel (PHASE A CTMT ISO ACTUATION) and the other on the reactor control panel (PHASE A CTMT ISO ACTUATION). On one of the safeguards panel are the PHASE A CTMT ISO RESET A(B) TRN push buttons that allow the containment isolation phase A signal to be cleared. Both push buttons must be depressed to clear the phase A signal. Valves that are shut by the phase A signal must be opened with their individual valve controls. MLB-2 has an indication for each component that receives a Phase A signal. When all lights on MLB-2 are lit, the operator can easily recognize that all equipment receiving a Phase A signal has responded properly.

Containment Isolation Phase B and Containment Spray (Figure 35)

A containment isolation phase B signal and a containment spray actuation signal are caused by 2/4 high-3 containment pressure. There are four protection bistable status lights on TSLB-1 that indicate the status of the high-3 containment pressure bistable. If a single bistable trips (pressure exceeds 27 psig), the CTMT PRESS HI-3 ALERT alarm energizes.

IF 2/4 containment pressure instruments exceed the setpoint, the CS ACTUATION (containment spray actuation) and CTMT ISO PH B (containment isolation phase B) alarms energize. MLB-3 has an indication for each component that receives a Phase B signal. When all MLB-3 lights are lit, the operator can easily recognize that each component that receives a Phase B signal has responded properly.

A containment isolation phase B and containment spray actuation can be manually initiated from the safeguards panel. There are four PHASE B CTMT ISO CS ACTUATION

switches. These switches are grouped in two sets of two switches each. Simultaneously placing both switches in a set in the ACTUATE position will cause a manual containment phase B isolation and containment spray actuation signal. There are four reset push buttons on the safeguards panel--two for containment spray (train A and train B) and two for containment isolation phase B (train A and B). All four push buttons must be momentarily depressed to clear the containment spray actuation and containment isolation phase B signals.

Feedwater Isolation (Figure 17)

A feedwater isolation signal occurs automatically from the following conditions:

1. Safety injection
2. Reactor trip and low T_{avg}
3. (high-high steam generator level)

Indications and control associated with a reactor trip, safety injection, and high-high steam generator water level are discussed previously in this system description. A low T_{avg} condition is indicated by three protection bistable lights on TSLB-2. There are also three T_{avg} indications on the MCB.

If 2/3 loop T_{avg} drops below 554°F and a reactor trip occurs, a feedwater isolation signal is generated. This is indicated by the RX TRIP AND LO T_{AVG} FW CONT VLV ISO alarm on the MCB. The signal can be reset at any time using two push buttons on the MCB (FW ISO RESET A(B) TRN).

When an SI or P-14 occurs and results in a reactor trip, the feedwater isolation signal is sealed by P-4. The feedwater isolation signal can be reset when the initiating signal has cleared and when the reactor trip breakers have been reclosed.

Main Steam Line Isolation (Figure 18)

A main steam line isolation signal (SLIAS) occurs automatically from the following conditions:

1. Low steam pressure
2. High steam flow with lo-lo T_{avg}
3. High-2 containment pressure

on the MCB and provide a differential flow alarm to detect leakage (Figure 11). The difference in inlet and outlet flow is measured and compared against a setpoint. The setpoint is 300 gpm (+0,-75) for total flow rates < 1980 gpm and it automatically increases to a setpoint of 750 gpm (+0, -30) for total flow rates ≥ 1980gpm. Radiation monitors (RE-20A and B) are provided on the outlet from each containment cooler service water train to detect the release of radioactive service water to the environment. They provide alarm function only refer to RCP-252.2 for setpoint.

OPERATIONS

Instrumentation and Control

The following discusses the major controls associated with the containment spray system and the containment coolers. These controls are found on the MCB, with the exception of the containment cooler service water discharge valves and the containment cooler condensate drain header isolation valves, which are located on the BOP.

Containment Spray Pump to Spray Header Isolation Valves (MOV-8820A and B) (Figure 5)

A three-position (CLOSE/AUTO/OPEN, spring return to AUTO) handswitch controls each valve. In the AUTO position, the valve will automatically open on a containment spray actuation signal ("P" signal). Valve position indication lights are located above the switch.

Containment Spray Pumps (Figure 6)

A three-position (STOP/AUTO/START, spring return to AUTO) handswitch controls each pump. Placing the switch in the START position will start the pump. Placing the switch in the STOP position will stop the pump and reset the 86 relay. In the AUTO position, the pump will automatically start upon receipt of a containment spray actuation signal ("P" signal) if an LOSP has not occurred. If an LOSP has occurred with the "P" signal present, a safety injection signal to the ESF sequencer must also be present, or the ESF sequencer must be in test, to start the pump. The load shed signal will automatically stop the pump. The pump will also trip on an

29. 026AA1.02 001/1/1/CCW/C/A 3.2/3.3/BANK-N/FA011005/RO/CVR

A leak has developed in the 1A RCP thermal barrier heat exchanger. "A" Train CCW is the on service train.

Which one of the following describes the correct sequence of events that would occur with no operator involvement?

A. -AA4 (AB4), CCW SRG TK LVL A (B) TRN HI-LO, annunciator lit;
-DD2, RCP THRM BARR CCW FLOW HI, annunciator lit;
-HV-3045, CCW FROM RCP THRM BARR, closes;
-HV-3184, CCW FROM RCP THRM BARR, closes;
-DD3, CCW FLOW FROM RCP OIL CLRS LO, annunciator lit.

B. -AA4 (AB4), CCW SRG TK LVL A (B) TRN HI-LO, annunciator lit;
-HV-3184, CCW FROM RCP THRM BARR valve, goes closed;
-DD2, RCP THRM BARR CCW FLOW HI, annunciator lit;
-HV-3045, CCW FROM RCP THRM BARR valve, goes closed.

C. -AA4 (AB4), CCW SRG TK LVL A (B) TRN HI-LO annunciator lit;
-DD2, RCP THRM BARR CCW FLOW HI, annunciator lit;
-HV-3045, CCW FROM RCP THRM BARR valve closes;
-HV-3184, CCW FROM RCP THRM BARR valve closes.

D. -HV-3184, CCW FROM RCP THRM BARR valve, goes closed;
-AA4 (AB4), CCW SRG TK LVL A (B) TRN HI-LO, annunciator lit.

A. Incorrect; The closing of the HV-3045 and HV-3184 does not affect the flow path through the RCP oil cooler.

B. Incorrect; Once HV-3184 is closed flow will no longer be going past FE-3045 therefore, DD2 will not alarm if if had not alarmed prior to the closing of HV-3184 and HV-3045 will not get a close signal.

C. Correct;
-AA4 (AB4), CCW SRG TK LVL A (B) TRN HI-LO annunciator lit;
-DD2, RCP THRM BARR CCW FLOW HI, annunciator lit;
-HV-3045, CCW FROM RCP THRM BARR valve closes;
-HV-3184, CCW FROM RCP THRM BARR valve closes
The CCW leak from the higher pressure RCS source into the CCW system causes CCW tank level to increase (AA4); high flow in the CCW line from the RCS fluid causes DD2 to alarm and HV-3045 to shut stopping flow; Pressure increases in CCW piping and shuts HV-3185 in order to prevent overpressurization of the CCW system. Pressure and flow are sensed on the thermal barrier CCW discharge line. The pressure sensors (PI-3184A, B, and C) signal HV-3184 to shut when pressure increases to 75 psig. Flow element FE-3045 shuts HV-3045 if the flow increases to 160 gpm.

D. Incorrect; Once HV-3184 goes closed no more fluid is added to the CCW surge tank therefore, if this alarm did not alarm prior to the closing of HV-3184 it will not alarm afterward (unless check valves in the CCW to thermal barrier leak and this would not be a reasonable assumption). The thermal barrier check valves shall isolate the CCWS piping upstream of the RCPs from the RCS in the event of a rupture of the reactor coolant pump thermal barrier. On a thermal barrier failure, the check valves shall prevent a pressure transient from propagating to the low pressure piping.

APE: 026 Loss of Component Cooling Water (CCW)
AA1. Ability to operate and / or monitor the following as they apply to the Loss of Component Cooling Water:
(CFR 41.7 / 45.5 / 45.6)
AA1.02 Loads on the CCWS in the control room .. 3.2

2. Evaluate abnormal plant or equipment conditions associated with the Component Cooling Water System and determine the integrated plant actions needed to mitigate the consequence of the abnormality (OPS52102G02).

2003 NRC EXAM
CCW-40204A11 #11

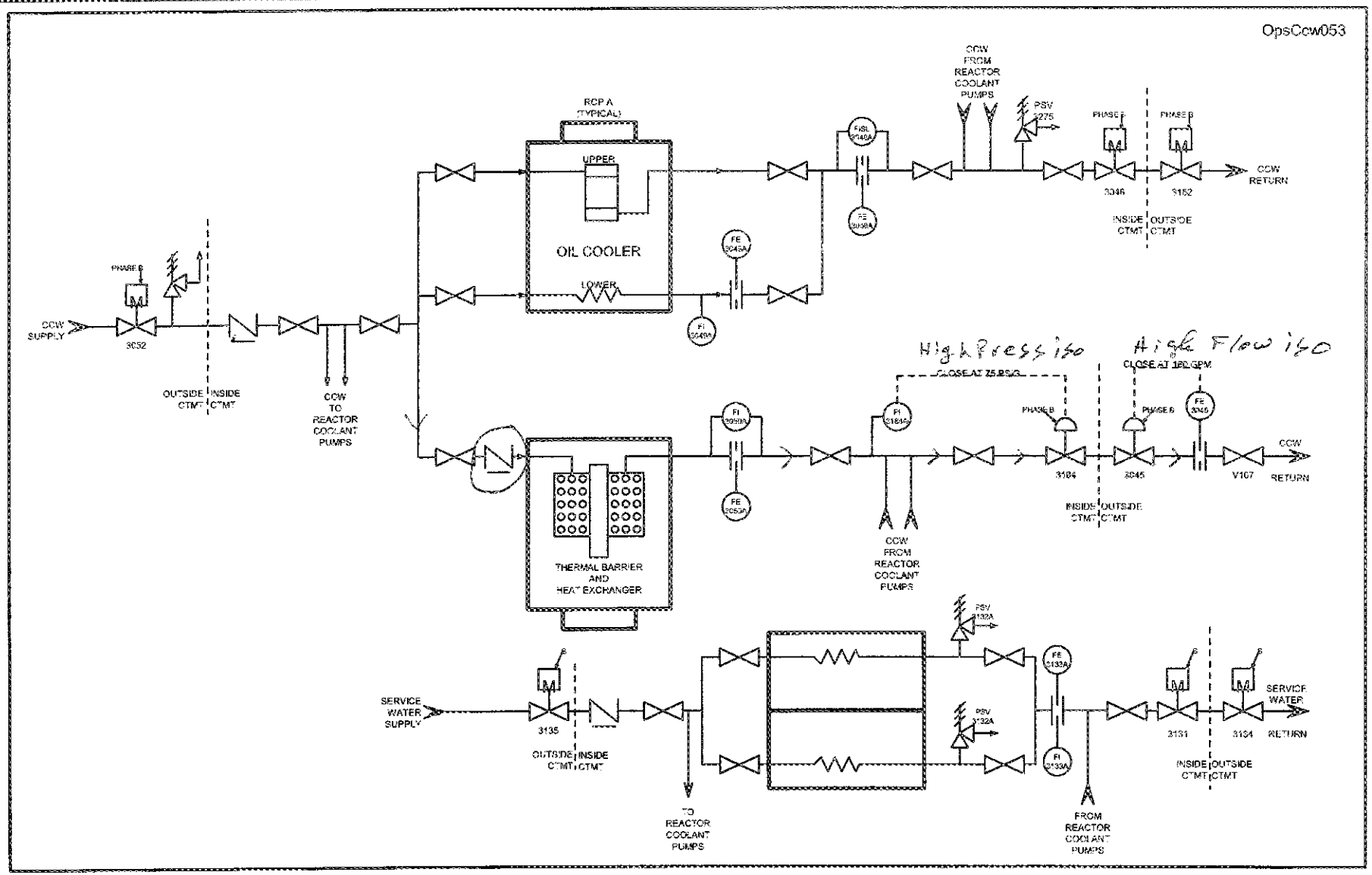

RCP - CCW & SW System

Figure 5

supply valve to the RHR heat exchanger in the on-service CCW train will be maintained closed to prevent unnecessary RHR heat exchanger wear and high CCW pump flow operation.

The cooling water supply to the RHR pumps taps off the same supply line to the RHR heat exchangers. A total of 15 gpm is supplied to the pumps at a pressure maintained below 60 psig by pressure control valves (PCV-3404A and B). A low flow of 3 gpm to each RHR pump annunciates on the MCB. (Note: PCV-3404A & B are for Unit 1 only. Unit 2 does not have PCVs.)

RCP Thermal Barrier Heat Exchangers and Oil Coolers

A total of 585 gpm of CCW is supplied to the RCPs (Figure 5). Of this total, 120 gpm goes to the thermal barrier heat exchangers, 450 gpm goes to the upper motor bearing oil coolers, and 15 gpm goes to the lower motor bearing oil coolers. The supply is controlled by MOV-3052, which is located outside of containment and is controlled from the MCB. The supply line penetrates containment and passes through a check valve before splitting into three separate lines, one for each RCP. The line to each RCP splits into two lines for the oil coolers and a separate line for the thermal barrier heat exchanger.

The oil coolers can maintain acceptable oil temperatures with a maximum CCW temperature of 105°F. Flow instruments FE-3048A, B, and C (located on the outlet of the oil cooler) annunciate on the MCB on low flow. After exiting the oil coolers, the flow then passes through two motor-operated isolation valves, one inside containment (MOV-3046) and one outside containment (MOV-3182). Both of these valves are operated from the MCB.

Loss of CCW flow to the RCP motor oil coolers will cause high bearing temperatures on any running RCP within approximately two minutes.

In order to prevent overpressurization of the CCW system if a thermal barrier heat exchanger ruptures, pressure and flow are sensed on the thermal barrier CCW discharge line. The pressure sensors (PI-3184A, B, and C) signal HV-3184 to shut when pressure reaches 75 psig. Flow element FE-3045 shuts HV-3045 if the flow reaches 160 gpm. A balance of plant (BOP) annunciator for each valve alarms when instrument air supply pressure to the valve decreases to 40 psig. The CCW piping on the inlet side is protected by a check valve that prevents RCS pressure from reaching the low pressure piping.

CCW piping in containment (CTMT) from the check valve in the supply line to each RCP thermal barrier heat exchanger to downstream of HV-3045 in the combined return line is designed

to withstand 2500 psig. Therefore, closure of either HV-3184 or HV-3045 can contain any high pressure reactor coolant leaking to the component cooling water side of the thermal barrier heat exchanger.

SOP-23.0 contains instructions for reopening HV-3045 when a high differential pressure is suspected of preventing reopening the valve after auto-closure (OR 2-99-603). When operating the valve locally, do not use any mechanical leverage on the valve handwheel because damage to the pin which connects the handwheel to the valve stem may result. (OR 2-98-320)

A "P"-signal (phase B containment isolation) will close the five CCW valves associated with the RCPs (MOV-3052, MOV-3046, MOV-3182, HV-3184, and HV-3045). Only one other valve closes on a "P"-signal. That valve is the instrument air to containment valve (HV-3611).

HV-3184 and HV-3045 are air operated valves. They fail closed on loss of air pressure. A solenoid valve, for each air operated valve, energizes to vent the air from the actuator which causes the air operated valve to close. See Figures 12 and 13 for the valve control logics. This means that a loss of power to either solenoid valve will cause the associated HV-3184 or HV-3045 to fail open since the valve actuator cannot be vented.

One pressure switch for HV-3184 and one pressure switch for HV-3045 senses air pressure in the line between the solenoid valve and the actuator. If the air pressure decreases to 40 psig, an alarm will be received on a Balance of Plant Annunciator Panel. HV-3184 alarms on Panel L. HV-3045 alarms on Panel N.

Loss of CCW to a RCP thermal barrier heat exchanger is not damaging to the RCP as long as seal injection flow from the Chemical and Volume Control System is maintained. However, loss of both CCW and seal injection flow could cause RCP seal failure resulting in a Loss of Coolant Accident. All RCP seal cooling is isolated if all seal cooling is lost. This will prevent further seal damage due to thermal shock or water hammer when the cooling water sources are restored to operation.

RCDT and Excess Letdown Heat Exchangers

One penetration into containment supplies CCW (Figure 3) to the RCDT heat exchanger and the excess letdown heat exchanger. The RCDT heat exchanger and the excess letdown heat exchanger use 300 and 230 gpm, respectively. The supply (AOV-3095) and discharge (AOV-3443

30. 027AK2.03 001/1/1/PZR PCS/C/A 2.6/2.8/BANK/FA011005/RO/

Given the following:

- Pressurizer pressure is 2230 psig and increasing.
- The proportional heaters are energized.
- The spray valves are closed.
- The Master Pressure Controller, PK-444A, fails such that it senses a constant input pressure equivalent to 2219 psig.

Which one of the following describes the response of the pressure control system if the operator takes no further action?

A. Pressure will cycle the variable heaters at a higher setpoint.

B. Pressure will rise until the spray valves open to control pressure.

C. Pressure will rise until PRZR PORV, PCV 445A opens to control pressure.

D. Pressure will rise until PRZR PORV, PCV 444B opens to control pressure.

A. Incorrect - Variable heaters receive a signal from the master pressure controller and will be ON exactly like the backup heaters. The master pressure controller will see 2219 psig and the controller will slowly raise the indicated demand signal to 100% at which time the BU heaters and the Variable heaters will be on. The variable heaters will not cycle.

B. Incorrect- Spray valves are controlled by control signal from the master pressure controller. The actual PZR pressure will increase due to B/U heater operation, but the master controller indicated demand and error signal will continue to increase due to the integral function and remain below the spray valve setpoint.

C. Correct - **Pressure will rise until PRZR PORV, PCV 445A opens to control pressure.**
The Error signal caused by the integral function of master pressure controller will maintain B/U Heaters on causing actual PZR pressure to rise to the setpoint of PCV-445A which receives its signal from the pressure B/Ss.

D. Incorrect- PORV-444B receives its control signal form the master pressure controller. This scenario will provide a close signal from the master pressure controller even though actual PZR pressure is increasing due to B/U & Variable heater operation.

Discussion:
The pressure input to the master pressure controller channel is from pressurizer pressure detector PT-444. This pressure input is compared with an operator-selected pressure setpoint to give an error signal. The error signal produced is processed through a proportional-plus-integral (P+I) controller, where the error signal is conditioned to produce a compensated output.

The P portion of the P+I controller produces an output that is directly proportional to the input and is also multiplied by an amplification factor (gain). The I portion of the controller produces an output equivalent to the integral of the error signal (also known as the reset).

The longer an error exists, the larger the integral output becomes. This means that there may be an

output from the integral section of the controller when there is no longer a pressure error.

The I portion of the P+I controller may cause pressure to be controlled above or below the nominal 2235 psig setpoint following a transient. The off-nominal pressure is normal following a transient. The operator should not adjust the setpoint on the M/A station during these transients. Indication of control demand is shown by a meter on PK-444A. On this meter, indication going towards zero percent means the system is trying to lower pressure, and indication going towards 100% means the system is trying to raise pressure.

The four back-up heater groups receive a control signal from the master pressure controller. With a -25 psig error signal present or 70% Indicated Demand, all back-up heater circuit breakers shut and energize the shared annunciator, PRZR PRESS REL VLV 445A OR B/U HTRS ON (pressurizer pressure relief valve 445A or back-up heaters on). This corresponds roughly to 2210 psig if the master pressure controller setpoint is set at 2235 psig. When the error signal rises above -20 psig, 67.5% Indicated Demand (or about 2215 psig), all back-up heaters' circuit breakers again open, and the annunciator clears.

PORV PCV-444B receives a pressure error input from the master pressure controller. The following conditions are required for PCV-444B to automatically open: (See Figure 9)

1. The pressure error output of the master pressure controller is +100 psig or 7.5% Indicated Demand or less. (Remember that the controller is normally adjusted to control plant pressure at 2235 psig. A +100 psig error implies that actual pressure is approximately 2335 psig.)

Each PORV is manually controlled through separate PORV control switches located on the MCB. Each switch is a three-position handswitch (CLOSE/AUTO/OPEN). With its switch selected to the AUTO position, PCV-444B is controlled through the master pressure controller and protective interlock circuit. Furthermore, PCV-445A is controlled through the secondary pressure control channel circuit when its switch is placed in the AUTO position.

Unlike the master pressure controller channel, the secondary pressure control channel does not have P+I circuitry to condition the pressure signal. Power-operated relief valve (PCV-445A) operates similarly to the other PORV (PCV-444B). The following conditions are required for PCV-445A to automatically open: (See Figure 9.)

1. The secondary control channel pressure (PT-445) must sense greater than the PORV setpoint value of 2335 psig.
2. Two of the three protective interlock pressure inputs must exceed 2000 psig.
3. The PCV-445A CLOSE/AUTO/OPEN control switch is selected to the AUTO position.

The SCR controller receives a control input from the master pressure controller channel. When the control input is high (the actual pressure is less than the setpoint), the heaters will receive the full voltage from the SCR controller. When the control input is low, the SCR controller does not allow current flow to the heaters. The control signal to the SCR operates in a band equivalent to a ± 15 psig error (2220 to 2250 psig if the AUTO set point is 2235 psig).

The two spray valves, PCV-444C from loop A and PCV-444D from loop B, operate on the same control signal from the pressurizer pressure master controller. Each spray valve also has its own individual proportional-type controller. They are set so that an input from the master pressure controller corresponding to a +25 psig error signal, 45% Indicated Demand, will cause the spray valves to begin to open.

To make a different question put in level decrease.

027AK2.03 Knowledge of the interrelations between the Pressurizer Pressure control Malfunctions and the following:
Controllers and Positioners.

Describe the local actions needed to support plant operation during normal, abnormal and emergency conditions associated with the Pressurizer Pressure and Level Control System (OPS52201H09).

List the automatic actions associated with the Pressurizer Pressure and Level Control System components and equipment during normal and abnormal operations including (OPS52201H07):
• Normal control methods
• Automatic actuation including setpoint, if applicable

PZR PRS/LVL-52201H08 #6

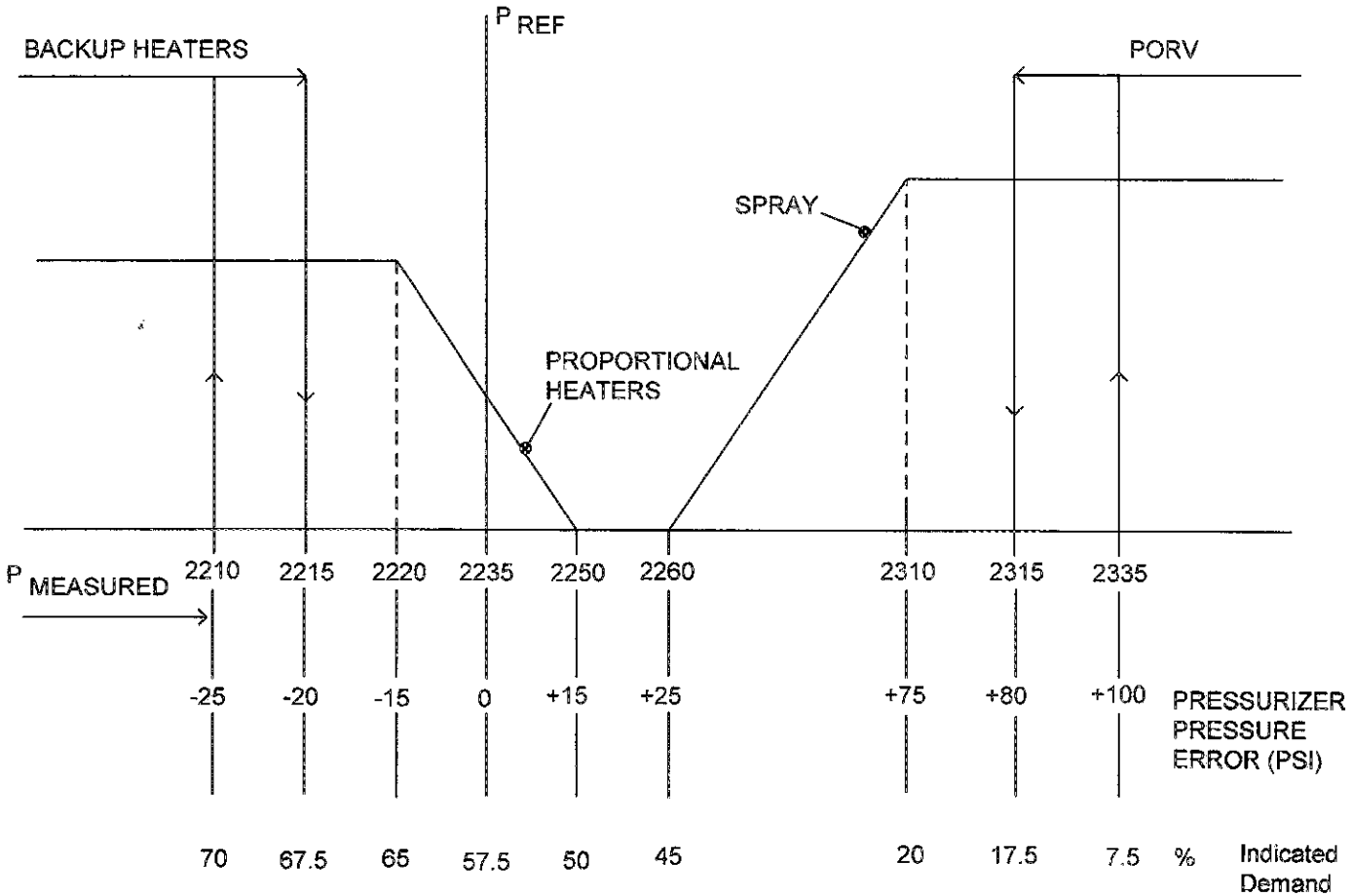

Pressurizer Pressure Control Program

Figure 4

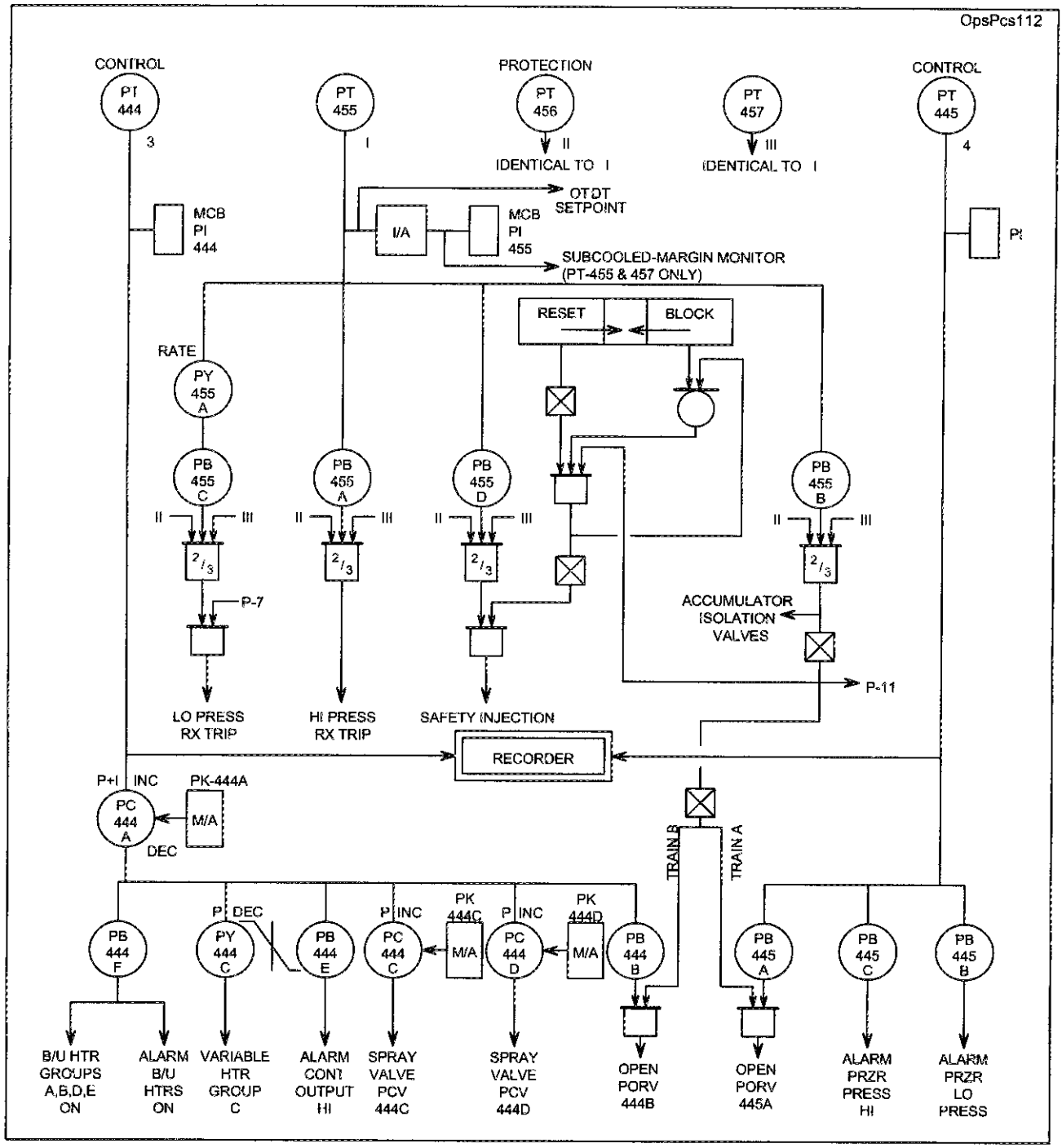

Pressurizer Pressure Protection and Control

Figure 3

The pressurizer has 78 vertically-mounted, electrical immersion heaters. The total heater capacity of 1400 kW is divided among one variable group (group C, rated at 400 kW) and four back-up groups (groups A, B, D, and E, rated at 250 kW each). Variable heaters are used during steady-state operation to compensate for ambient heat losses and the continuous spray flow. The back-up heater groups are used to initially heat the pressurizer when drawing a bubble and to aid the variable heaters during large reactor coolant system transients.

There are two spray valves (PCV-444C and PCV-444D) associated with the pressurizer. Each valve has a full flow capacity of 300 gpm. The valves connect to the loop A and B cold legs. The spray valves are air-operated, throttle valves which fail closed. Each spray valve has a minimum continuous flow of 0.5 gpm, which keeps the spray line in thermal equilibrium with the loops. Without the minimum spray flow, the spray line would cool to containment ambient temperature. Subsequent spray actuation would cause severe thermal shock to the spray valves, spray line, and spray nozzle. The continuous minimum spray flow also helps keep the boron concentration in the pressurizer at the same value as the reactor coolant system by causing a continuous recirculation through the pressurizer. Finally, the continuous flow keeps the entire pressurizer in thermal equilibrium, preventing stratified temperature layers from causing erratic pressure control.

The two air-operated PORVs (PCV-445A and PCV-444B) each have a relieving capacity of 210,000 lbm/hr at 2235 psig. These valves are set to open at 2335 psig. During power operation, they prevent excessive pressure increases in the reactor coolant system, while minimizing the actuation of the code safety valves.

Three self-actuated pressurizer code safety valves (8010A, B, and C), each with a capacity of 345,000 lbm/hr at 2485 psig, are also installed on the pressurizer. These valves are set to open at 2485 psig. They will prevent the reactor coolant system pressure from exceeding 110 percent of its design value (2735 psig) for the worst case accident of a turbine trip without a direct reactor trip at 100 percent power.

Master Pressure Controller

The master pressure controller (Figures 3 and 4) develops control signals for the following:

1. Variable (Proportional) heaters
2. Back-up heater control bistable
3. Spray valves (PCV-444C and PCV-444D)
4. One power-operated relief valve (PCV-444B)
5. Control pressure high annunciator

The pressure input to the master pressure controller channel is from pressurizer pressure detector PT-444. This pressure input is compared with an operator-selected pressure setpoint to give an error signal. The error signal produced is processed through a proportional-plus-integral (P+I) controller, where the error signal is conditioned to produce a compensated output.

The P portion of the P+I controller produces an output that is directly proportional to the input and is also multiplied by an amplification factor (gain). The I portion of the controller produces an output equivalent to the integral of the error signal (also known as the reset).

The longer an error exists, the larger the integral output becomes. This means that there may be an output from the integral section of the controller when there is no longer a pressure error.

The conditioned ERROR signal is developed in the pressurizer pressure master controller located in the process racks. With the master controller in AUTOMATIC (as selected by manual/auto (M/A) station PK-444A on the MCB), the reference pressure may be varied by adjusting a potentiometer dial. The potentiometer is normally set so that in automatic, the pressurizer heaters, spray valves, and PORVs will control plant pressure at 2235 psig. Variation of the reference setpoint will result in automatic control of plant pressure at a value other than 2235 psig.

The I portion of the P+I controller may cause pressure to be controlled above or below the nominal 2235 psig setpoint following a transient. The off-nominal pressure is normal following a transient. The operator should not adjust the setpoint on the M/A station during these transients. Indication of control demand is shown by a meter on PK-444A. On this meter, indication going towards zero percent means the system is trying to lower pressure, and indication going towards 100% means the system is trying to raise pressure.

Selecting MANUAL on PK-444A allows the operator to directly control components such as pressurizer spray valves and pressurizer heaters. In MANUAL, the normal automatic

controller output is interrupted, and the output depends on two manual push buttons on PK-444A. The INCREASE push button causes the controller to raise pressure, while the DECREASE push button causes the controller to lower pressure. This signal is neither rate nor integral compensated. As will be seen in the discussion of individual components, a control demand less than 50 percent in either AUTO or MANUAL is a demand to lower plant pressure. A control demand greater than 50 percent is a demand to raise plant pressure.

The variable heaters control reactor coolant system pressure during steady-state operation and are operated by a two-position ON/OFF switch located on the MCB. This switch is normally selected to the ON position, which closes the variable heater circuit breaker at the 600V LC M. A silicon-controlled rectifier (SCR) is between the variable heater circuit breaker and the heaters themselves. This solid-state device determines the voltage of the electrical power delivered to the variable heaters.

The SCR controller receives a control input from the master pressure controller channel. When the control input is high (the actual pressure is less than the setpoint), the heaters will receive the full voltage from the SCR controller. When the control input is low, the SCR controller does not allow current flow to the heaters. The control signal to the SCR operates in a band equivalent to a ± 15 psig error (2220 to 2250 psig if the AUTO set point is 2235 psig). Faults in the SCR controller energize the PRZR HTR CONT TRBL (pressurizer heater controller trouble) annunciator on the MCB.

The pressurizer back-up heaters are operated by separate three-position ON/AUTO/OFF switches located on the MCB. There is a need for pressurizer heaters to maintain plant pressure after certain types of accidents, such as a station blackout. For this reason, group A and group B heaters can be alternately powered by emergency buses (600V LC A (Emerg) and 600V LC C (Emerg) respectively). These two heater groups also have local controls and LOCAL/REMOTE control transfer switches on the hot shutdown panel. If the group A or group B pressurizer heaters are placed in local control, the PRZR HTRS IN LOCAL CONT (pressurizer heaters in local control) annunciator on the MCB energizes. Back-up heater groups D and E are powered from 600V LC M and 600V LC N, respectively.

In the event of a loss of site power (LOSP), the emergency section of load control center (LCC) 1A will automatically align to LCC 1D. This makes power available for the 1A

31. 028AK2.03 001/1/2/PZR LCS/C/A 2.6/2.9/NEW/FA011005/RO/CVR

Unit 1 is at 100% power with conditions as follows:

- Pressurizer Level Selector Switch is in the I/II Position.
- LT-459, Pressurizer level Transmitter failed high

Which one of the following is correct concerning LK-459F, PRZR LVL Controller demand; Charging Flow; and the position the PRZR LVL CONT CH Switch needs to be selected to to restore automatic level control?

A. Demand goes up, Charging flow goes up, Select position I/III.

B. Demand goes up, Charging flow goes up, Select position III/II.

C. Demand goes down, Charging flow goes down, Select position I/III.

D. Demand goes down, Charging flow goes down, Select position III/II.

A. Incorrect. This would be true if LT-459 failed low, except selecting I/III would not allow automatic control since LT-459 is channel I.

B. Incorrect. Demand does go down, except charging flow goes the same direction as demand.

C. Incorrect. This would be true if LT-459 failed low, except charging flow would also go up, and selecting I/III would not allow automatic control since LT-459 is channel I.

D. Correct. Demand goes down, Charging flow goes down, Select position III/II. The controlling channel is channel 1, LT-459. When it fails hi, the controller tries to lower level by lowering demand. This lowers charging flow. Selecting III/II will allow LT-461 to control and LT-459 will isolated from the control function.

028AK2.03 Pressurizer level Malfunction - Knowledge of the interrelations between the Pressurizer Level control Malfunctions and the following:
Controllers and Positioners.

Explain the purpose and operation including the design features and functions, capacities, and protective interlocks of the following major components associated with the Pressurizer Pressure and Level Control System (OPS52201H02):
- Master Level Controller
- Secondary Level Controller

PZR PRS/LVL-52201H02 #10

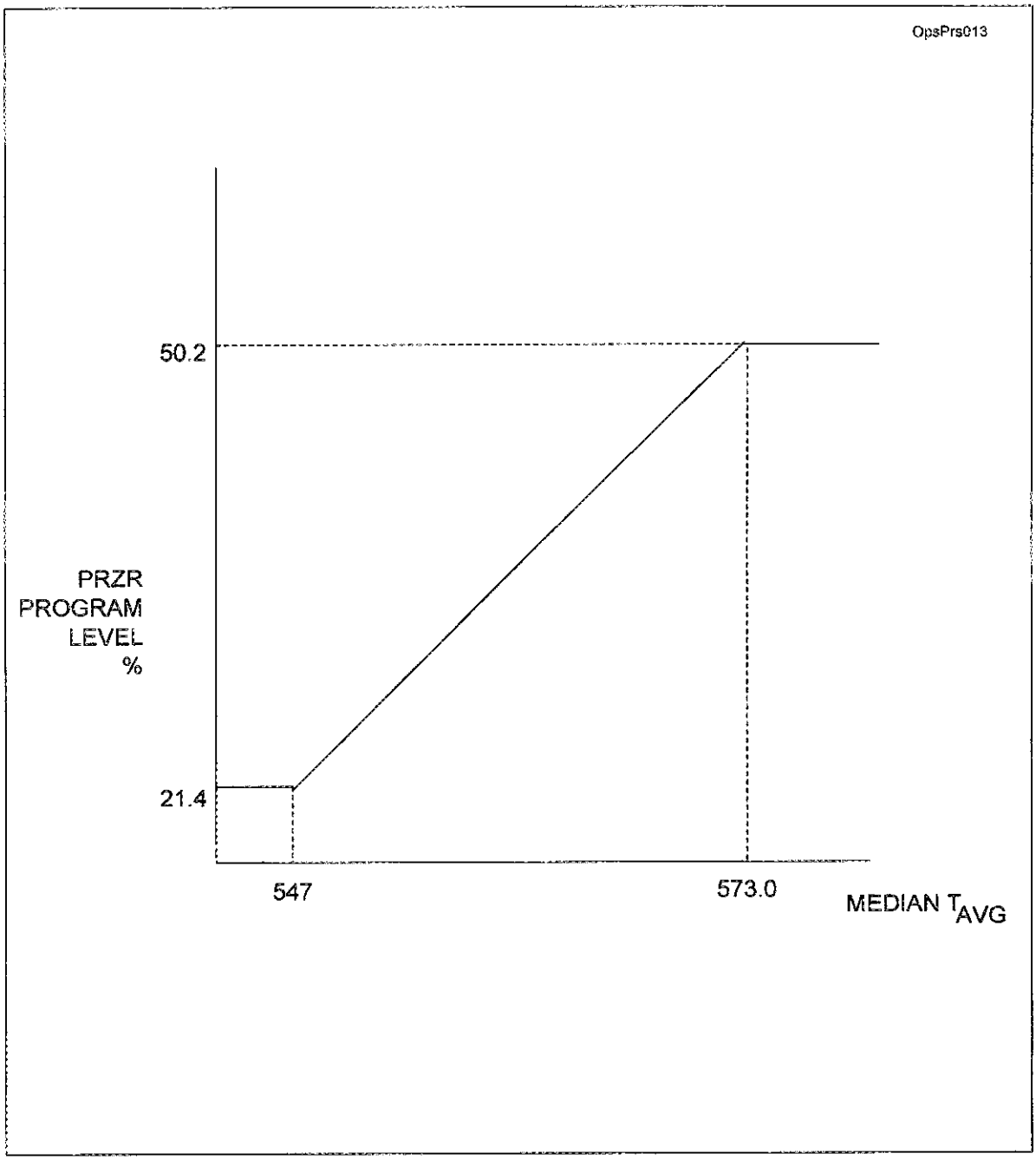

Pressurizer Program Level

Figure 8

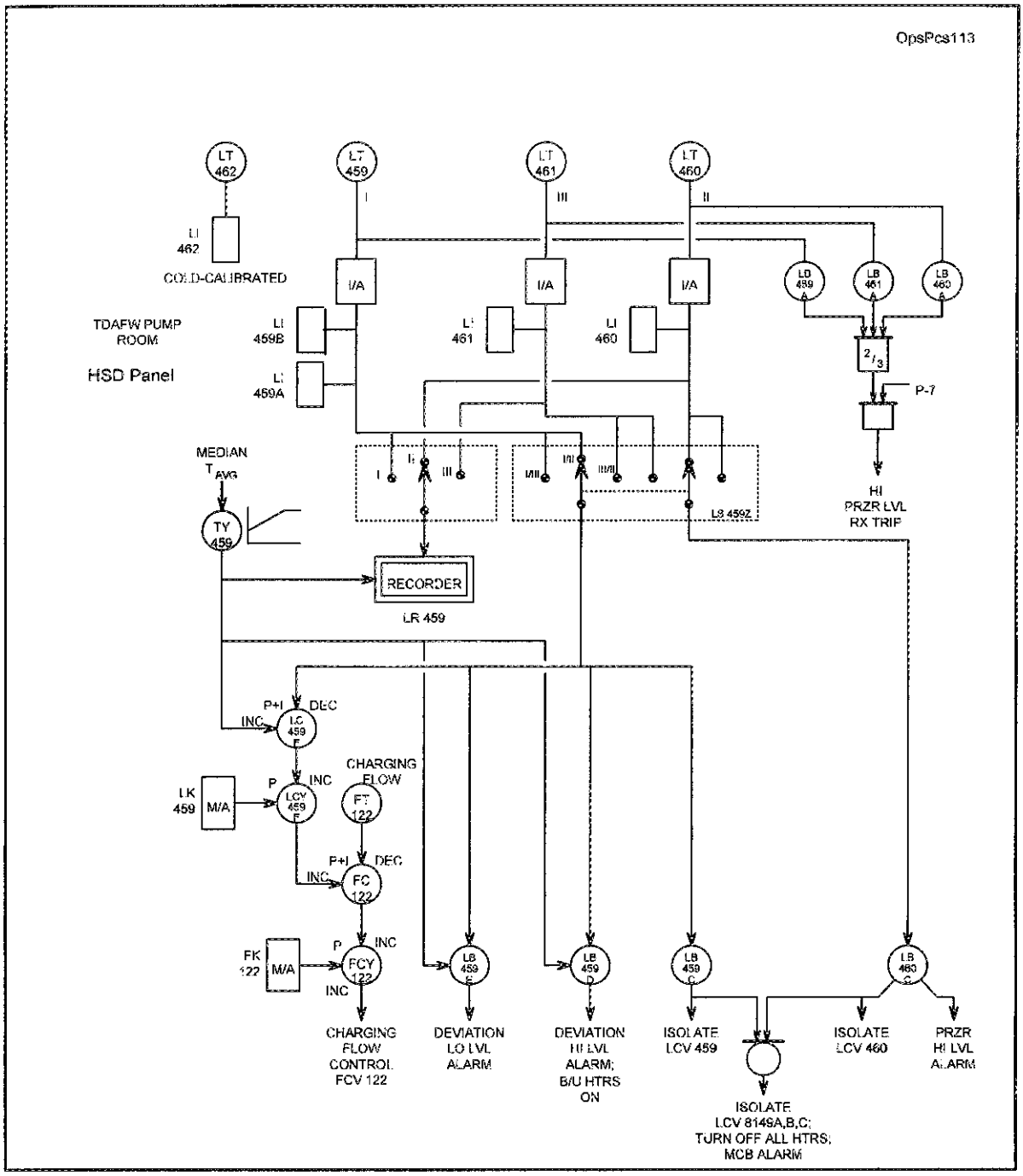

Pressurizer Level Protection And Control

Figure 7

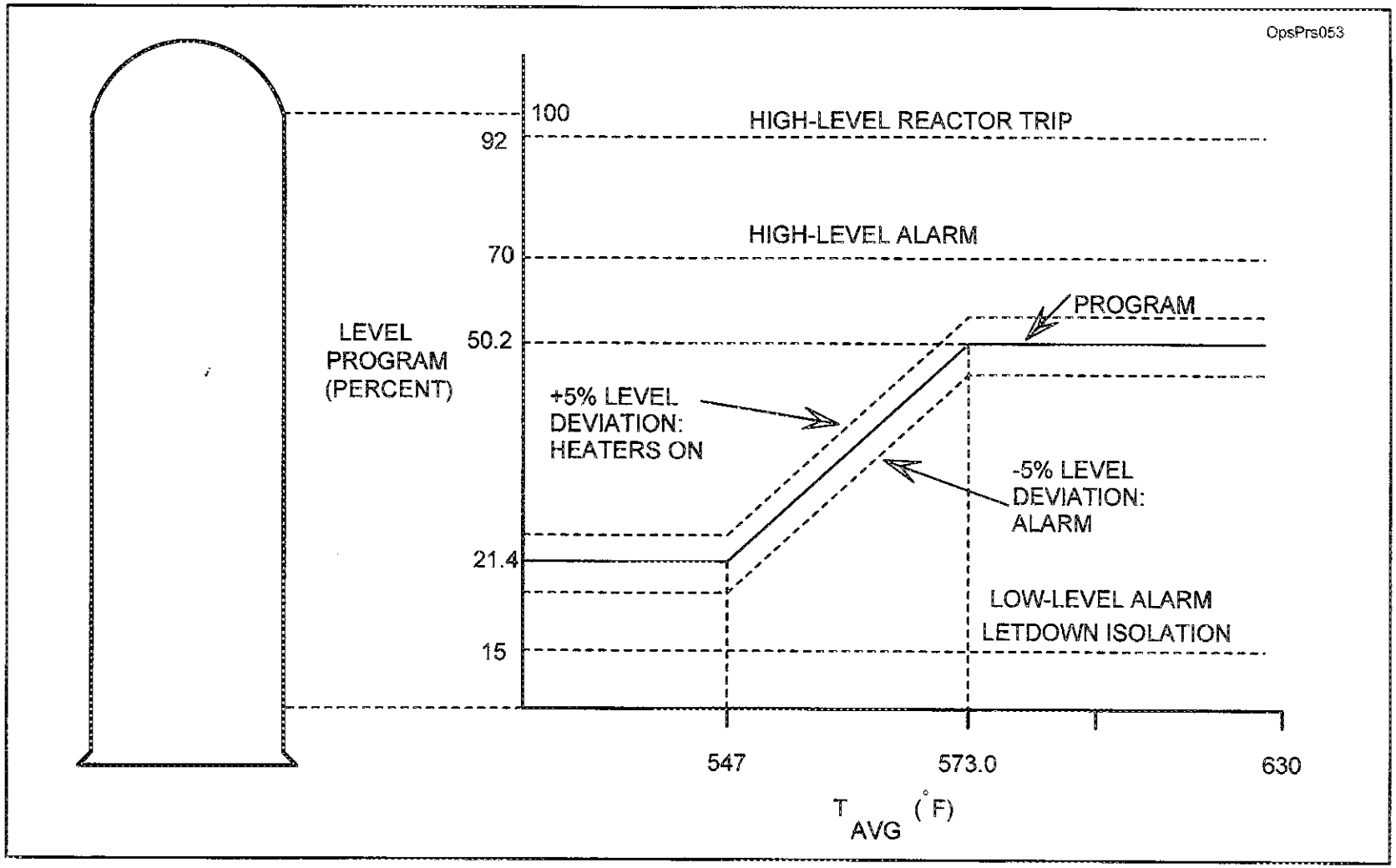

Pressurizer Level Program

Figure 6

If the reference leg leaks, pressurizer level indication will read erroneously high. This failure can be detected by comparison among the other independent level indications.

The ΔP between the reference leg and the variable leg is sensed by a bellows in the D/P cell. Maximum ΔP across the bellows results in an indicated level of 0% and zero ΔP across the bellows results in an indicated level of 100%. If a rupture were to occur in the bellows for the ΔP cell, then the ΔP across the bellows would be zero giving an indicated level at 100%. This failure can be detected by comparison among the other independent level indications.

LT-462 doesn't have a sealed reference leg. A large, rapid pressure drop will affect LI-462 accuracy by either causing gases to come out of solution or water to flash in the reference leg. Both of these events will cause indicated level to be greater than actual level.

Master Level Control Channel

The master controller (Figure 7) of the pressurizer level control system controls the charging flow to maintain the actual level at the program setpoint. The system uses charging flow rate, actual pressurizer level, and programmed level as control inputs. The master controller also provides input to the low level heater cutoff circuit, the orifice isolation valve interlock circuitry, and the letdown isolation valve interlock circuitry for LCV-459. The level channel input to the master controller can be selected to one of two hot calibrated instrument channels with the pressurizer level control selector switch (LS-459Z). If the three-position switch (I/III, I/II, III/II) is in the I/II position, then LT-459 (protection channel I) provides the input to the master controller. The other two switch positions, I/III and III/II, work in a similar manner to that described for CHAN I/II. For a discussion of the orifice isolation and letdown valves, refer to the Chemical and Volume Control lesson plan.

The level control circuitry uses median loop T_{avg}. The median T_{avg} signal is processed to obtain the programmed level. (See Figure 8.) Programmed level is compared with actual level to give a level error. The level error is used to do the following (See Figure 6.):

1. The back-up heaters energize on a +5 percent level deviation and actuate the PRZR LVL DEV HI B/U HTRS ON (pressurizer level deviation high back-up heaters on) annunciator on the MCB.

2. The PRZR LVL DEV LO (pressurizer level deviation low) annunciator actuates on the MCB (-5 percent level deviation).

3. The signal provides an input for control of the chemical and volume control system charging flow via the master level controller (LC-459F) and the charging pump flow control valve controller (FC-122). The flow control valve controller (FC-122) is a slave to the master level controller (LC-459F). In other words, when in AUTO, the valve controller input is the output from the master controller.

The master level controller is a P+I type controller and is located in the process racks. Manual/auto station (LK-459) on the MCB is associated with the P+I controller. Although a dial is available, no automatic setpoint adjustment is possible on the station because the median T_{avg} determines the programmed level setpoint. The programmed level value is read on the green pen of the pressurizer level recorder (LR-459). If selected to MANUAL, however, the operator can use the INCREASE and DECREASE push buttons to raise or lower pressurizer level.

The charging pump flow control valve slave controller (FC-122) is also a P+I type controller. An M/A station is provided at the hot shutdown panel (HSP) (HIK-122) and the MCB (FK-122). Local control at the HSP is assumed by selecting the FCV-122 control transfer switch from REMOTE (MCB) to the LOCAL (HSP) position. If local control of FCV-122 is taken, an annunciator energizes on the MCB, CHG OR SEAL INJ FLOW CONT VLV IN LOCAL CONT (charging or seal injection flow control valve in local control). In MANUAL, either of the M/A stations can control valve position without reference to the conditioned level error signal from the master level controller.

The charging flow valve P+I controller adjusts the position of the charging flow control valve (FCV-122) which, in turn, throttles the output flow of the charging pumps. This is accomplished by comparing charging flow demand (output of the pressurizer level master controller) to a measurement of charging flow from a flow transmitter in the charging line. Any time an integral controller is used, a setpoint must be provided for comparison to the input signal. This will ensure that the P+I controller has a zero error input signal, with the level control system maintaining steady-state conditions in the pressurizer. Since charging flow is a measured plant parameter, it provides a convenient variable to be used as a controller setpoint. With the master

controller in AUTO and the flow controller in AUTO, FCV-122 will adjust its output as necessary to match charging flow with pressurizer level requirements.

Each pressurizer level channel can sound a low level alarm. This alarm, PRZR LVL LO B/U HTRS OFF LTDN SEC (pressurizer level low back-up heaters off and letdown secured), occurs at 15 percent on the MCB.

Secondary Level Control Channel

The secondary controller (Figure 7) of the pressurizer level control system provides for redundant input to the low level heater cutoff circuit, the orifice isolation valve interlock circuitry, and the letdown isolation valve interlock circuitry for LCV-460. The level channel input to the secondary controller can be selected to one of two hot calibrated instrument channels with the pressurizer level control selector switch (LS-459Z). If the three-position switch (I/III, I/II, III/II) is in the I/II position, the LT-460 (protection channel II) provides the input to the secondary controller.

Inputs to the Reactor Protection System

The three, hot calibrated instrument channels are used to provide inputs to the high pressurizer level reactor trip at 92-percent level. The trip logic requires 2/3 level detectors to sense 92-percent level. Indication of a single channel trip is given by PRZR LVL HI RX TRIP ALERT (pressurizer level high reactor trip alert) on the MCB and PRZR HI LEVEL on the trip status light box 2 (TSLB2). A reactor trip signal from high pressurizer level is indicated by PRZR HI LVL RX TRIP (pressurizer high water level reactor trip) on the reactor trip first out annunciator panel.

Response to a Failed Instrument

This discussion describes the failure of one instrument. It is not intended to discuss all the possible failures with each instrument, but to give a model to be applied toward analyzing the failure of any instrument.

If LT-459 fails low, the master level controller will sense pressurizer level being much lower than setpoint. The demand signal for the master level controller (LC-459F) will go to

100% in an attempt to raise pressurizer level. Because pressurizer level is being sensed at 0%, letdown will isolate (8149A, B, and C closed and LCV-459 closed), all pressurizer heaters will deenergize, and charging flow controller, FK-122, demand will go to flow equivalent to 130 gpm (upper limit in auto control). MCB annunciators PRZR LVL DEV LO (pressurizer level deviation low) (HB2) and PRZR LVL LO B/U HTRS OFF LTDN SEC (pressurizer level low back-up heaters off & letdown secured) (HA3) alarm. Charging flow control valve FCV-122 will open more until charging flow reaches 130 gpm. Actual pressurizer level will increase. At 70% level, as sensed by the secondary control channel, MCB annunciator PRZR LVL HI (pressurizer water level high) (HB1) will alarm. A reactor trip will occur when actual pressurizer level reaches 92%.

For more detailed information on system failures and required responses, refer to Appendix 2 of this lesson.

OPERATIONS

Instrumentation and Controls

The following is a discussion of all the major controls associated with the pressurizer pressure and level control system. These controls are found on section C of the MCB, unless otherwise noted.

Pressurizer Power-Operated Relief Valves (PCV-445A and PCV-444B)

Each of the air-operated valves (Figure 9) is controlled by a three-position handswitch (CLOSE/AUTO/OPEN). In the AUTO position, the valve will automatically respond to pressurizer pressure control circuits. These valves fail closed on a loss-of-power or loss-of-air. Valve position indication lights are located above the switch.

Pressurizer Power-Operated Relief Isolation Valves (8000A and 8000B)

These motor-operated valves serve as isolation valves between their PORV and the pressurizer. Each valve is controlled by a three-position handswitch (CLOSE/Neutral/OPEN, spring return to Neutral). Once the valve is fully open, the switch may be released to the Neutral position. The valve fails as is on a loss-of-power. Valve position indication lights are located

If letdown flow is lost, charging flow must be secured to minimize the rate of pressurizer level increase and to prevent excessive thermal stresses on the piping where the charging line penetrates the RCS loop.

Charging Flow Malfunction

During normal operations, the charging pumps supply the necessary makeup water to the RCS to maintain pressurizer level on program. FK-122, which controls the charging flow control valve (FCV-122), in AUTO will respond accordingly to maintain pressurizer level on program. FK-122 receives an input signal from the master pressurizer level controller (LK-459) which in turn receives an input signal from the selected pressurizer level control channel (actual level) and from the T_{avg} median signal selector (program level). If the selected level channel is higher than the pressurizer level program, then FCV-122 will respond to decrease charging flow. If the selected level channel were low in comparison to the pressurizer level program, then FCV-122 will respond to increase charging flow. The operator should attempt to maintain pressurizer level on program by taking manual control of the controller (FK-122) and repositioning FCV-122 as necessary.

Seal injection flow variations can also affect charging flow. However, the effect is minimal. FCV-122 will normally respond accordingly to maintain pressurizer level on program.

If the operating charging pump trips, (which would cause a loss of charging and seal injection flow) then the operator should verify the dedicated standby pump has started.

If the operating charging pump is tripped, and the standby pump fails to start, charging flow will be interrupted; there will be no charging flow to either the regenerative heat exchanger or the RCP seals. A non-operating charging pump should then be manually started. However, if the operating pump had tripped because of low suction pressure, the standby (non-operating) pump will probably trip for the same reason.

If charging flow to the regenerative heat exchanger is lost, letdown cannot be cooled properly. Flashing of the reactor coolant may occur as it passes through the letdown orifices and the hot letdown can also cause resin degradation in the demineralizers. If all available charging pumps are tripped, consideration should be given to isolating letdown. This will also minimize the effects of pressurizer level decreasing.

LOCATION HA1

A1
PRZR LVL HI RX TRIP ALERT

SETPOINT: 92% of Span

ORIGIN: Pressurizer High Water Level Bistables from PRZR Level Transmitters LT-459, LT-460 or LT-461 1/3 Detectors

PROBABLE CAUSE

1. Pressurizer Level Instrument or Control System malfunction.
2. Charging or Letdown System malfunction.
3. Void formation in the Reactor Coolant System.

AUTOMATIC ACTION

NONE

OPERATOR ACTION

1. Determine actual pressurizer water level as indicated by LI-459, LI-460 AND LI-461, on the MCB.
2. Determine the cause of the alarm.
3. IF a charging OR letdown system malfunction exists, THEN refer to annunciator window HA2, PRZR LVL DEV HI B/U HTRS ON.
4. Ensure the cause is not due to void formation by verifying a minimum of 50°F subcooling of the reactor coolant system.
5. IF a minimum of 50°F subcooling of the RCS does NOT exist, AND the alarm is not due to an instrument failure, THEN establish and maintain the required subcooling by raising system pressure or lowering system temperature.
6. IF the cause was due to an instrument OR component failure, THEN notify appropriate personnel to determine the cause and correct the failure.
7. Refer to Technical Specifications section on Instrumentation for LCO Requirements.

References: A-177100, Sh. 356; U-260610; U-198768; U-266647 PLS Document; Technical Specifications

LOCATION HA2

SETPOINT: 5% of Span above Level Program

ORIGIN: Level Bistable LB-459D from Level Transmitter LT-459 or LT-461 and TY-408 median TAVG.

A2
PRZR LVL DEV HI B/U HTRS ON

PROBABLE CAUSE

1. Pressurizer Level Instrument or Control System malfunction.
2. Plant Transient while in manual rod control.
3. Rod Control System malfunction.
4. Charging or Letdown System malfunction.

AUTOMATIC ACTION

1. Pressurizer Backup Heaters energize.

OPERATOR ACTION

1. Place turbine load on HOLD.
2. Check pressurizer level indications and determine the actual level deviation.
3. Ensure that the pressurizer backup heaters are energized.
4. IF required, THEN take manual control of CHG FLOW FK 122 and decrease charging flow to return pressurizer level to the program band.
5. Determine the cause of the level deviation by checking:
   - 5.1 Charging flow
   - 5.2 Letdown flow
   - 5.3 BTRS flow
   - 5.4 Charging pump status
6. IF the alarm was caused by a plant transient, THEN control the transient and return Pressurizer Level to normal.
7. IF the alarm is due to an instrument fault, THEN:
   - 7.1 IF Level Transmitter LT-459 (461) has malfunctioned, THEN it may be replaced temporarily by LT-461 (459) through the use of the Pressurizer Level Selector Switch located on the MCB.
   - 7.2 Notify appropriate personnel to determine the cause and correct the fault.

LOCATION HA2

OPERATOR ACTION (cont.)

8. Maintain pressurizer level at the program level until the affected component (s) can be restored to normal operation as follows:
   8.1 IF charging flow control valve Q1E21FCV122 fails open, THEN perform the following:
      8.1.1 Increase letdown flow to 120 gpm.
      8.1.2 Adjust SEAL WTR INJECTION HIK 186 as required to maintain RCP seal injection flow 6-13 gpm not to exceed the limits of Tech. Spec. Bases figure B 3.5.5-1.

NOTE: Letdown flow is isolated prior to isolating charging flow to protect the regenerative heat exchanger from the effects of uncooled letdown flow. Refer to FNP-1-AOP-16.0, LOSS OF LETDOWN, for guidance as necessary.

      8.1.3 IF necessary to control increasing pressurizer level, THEN isolate the RCS as follows:
         8.1.3.1 Secure letdown.
         8.1.3.2 Close CHG PUMPS TO REGENERATIVE HX Q1E21MOV8107 or MOV8108.

CAUTION: The following steps for establishing bypass flow around FCV-122 should be performed as quickly as possible.

      8.1.4 Open charging flow regulator bypass valve Q1E21V581.
      8.1.5 Close charging flow regulator inlet valve 1-CVC-V-8402B (Q1E21V134B).
      8.1.6 IF not isolated in step 8.1.3.1, THEN reduce letdown flow to 60 gpm.
      8.1.7 IF closed in step 8.1.3.2, THEN open CHG PUMPS TO REGENERATIVE HX Q1E21MOV8107 or MOV8108.

NOTE: Q1E21V135 is a designed throttle valve and should be used for throttling first. IF it is not effective, THEN Q1E21V581 may be used as required.

      8.1.8 Throttle charging flow regulator bypass valve Q1E21V135 (1-CVC-V-8403) OR Q1E21V581 to maintain pressurizer level at the programmed level.
      8.1.9 WHEN charging flow established, THEN establish normal letdown as required using FNP-1-SOP-2.1, CHEMICAL AND VOLUME CONTROL SYSTEM, PLANT STARTUP AND OPERATION.

References: A-177100, Sh. 357; U-260610; D-177109; D-177111; D-177112; D-177113; U-266647 PLS Document; Technical Specifications

LOCATION HA3

SETPOINT: 15% of Level Span

ORIGIN: Level Bistable LB-459C or LB-460C from Level Transmitters LT-459 and LT-460 respectively (or LT-461 when selected in place of LT-459 or LT-460).

A3
PRZR LVL LO HTRS OFF LTDN SEC

PROBABLE CAUSE

1. Pressurizer Level Instrument or Control System malfunction.
2. Charging System malfunction.
3. Primary Coolant leak.
4. Plant Transient.

AUTOMATIC ACTION

1. Pressurizer backup AND proportional heaters de-energized.
2. LB459C closes LTDN LINE ISO Q1E21LCV459 and LB460C closes LTDN LINE ISO Q1E21LCV460.
3. LTDN ORIF ISO VALVES Q1E21HV8149A, B & C close.

OPERATOR ACTION

1. Check indications and determine actual pressurizer level and pressure.
2. Ensure that the automatic actions have occurred.
3. IF actual level is low, THEN take actions as necessary to increase charging flow and maintain pressurizer level.
4. Determine the cause of the alarm.
5. IF a primary coolant leak is indicated, THEN perform the actions required by the appropriate AOP or EEP.
   a) FNP-1-AOP-1.0, RCS LEAKAGE.
   b) FNP-1-EEP-0, REACTOR TRIP OR SAFETY INJECTION
   c) FNP-1-AOP-2.0, STEAM GENERATOR TUBE LEAKAGE
6. IF a charging system malfunction is the cause, THEN refer to annunciator window HB2, PRZR LVL DEV LO.
7. IF a loss of normal letdown has occurred, THEN perform the actions required by FNP-1-AOP-16.0, LOSS OF LETDOWN.

8. IF the alarm is determined to be due to an instrument malfunction AND actual Pressurizer level and pressure are normal, THEN;
   a) Take manual control of CHG FLOW FK 122 and decrease Charging Flow to zero.
   b) Verify proper response of pressurizer spray valves PCV-444C (D) to prevent an inadvertent pressure reduction.
   c) Check RCP Seal Injection Flows and IF required, THEN adjust flow.
   d) IF Level Transmitter LT-459 or LT-460 has malfunctioned, THEN it may be replaced temporarily by LT-461 through the use of the Pressurizer Level Selector Switch located on the MCB.
   e) Notify appropriate personnel to determine the cause and correct the failure.
   f) Re-establish Charging and Letdown Flow in accordance with FNP-1-SOP-2.1, CHEMICAL AND VOLUME CONTROL SYSTEM PLANT STARTUP AND OPERATION.
   g) IF the 1C variable group heaters are desired then momentarily place the 1C PRZR HTR GROUP VARIABLE switch to the "ON" position.
   h) Refer to Tech. Spec 3.3.1 for LCO requirements.

References: A-177100, Sh. 358; U-260610; D-177179; D-177376; D-177377; D-177378; D-177585; D-177586; U-266647 PLS Document; Technical Specifications

32. 029A2.03 001/2/2/CTMT PURGE/MEM 2.7/3.1/MOD/FA011005/RO/CVR

Plant conditions are as follows:

- Unit 1 is shut down in Mode 6 with Refueling in progress.
- Containment Minipurge is in service.
- The Unit Operator was directed to secure Minipurge for an STP.
- Prior to commencing the procedure to secure Minipurge, the Unit Operator inadvertently places one of the CTMT PURGE DMPRS handswitches to FULL.

Which one of the following describes how the containment purge system is affected by this action, and IAW UOP-4.1, Controlling Procedure for Refueling, how is refueling affected?

A. The minipurge supply and exhaust fans will stop. Refueling may continue.

B. The main purge supply and exhaust fans will start in high speed. Refueling may **NOT** continue.

C. A set of minipurge supply and exhaust valves will close. **NO** main purge supply and exhaust dampers will open. Refueling may **NOT** continue.

D. A set of minipurge supply and exhaust valves will close **AND** a set of main purge supply and exhaust dampers will open. Refueling may continue.

A. Incorrect -no fan functions with the HS, ONLY dampers. Refueling may continue with mini or main purge in service as long as the automatic closure functions are operable.

B. Incorrect - no fan functions with the HS, ONLY dampers. Refueling may continue with mini or main purge in service as long as the automatic closure functions are operable.

C. Incorrect -this is only partially true. Some main purge supply and exhaust dampers DO open. Some do not. Refueling may continue with mini or main purge in service as long as the automatic closure functions are operable.

D. Correct -**A set of minipurge supply and exhaust valves will close AND a set of main purge supply and exhaust dampers will open.**
this will cause a set of Main purge dampers to open and a set of mini purge dampers to close. Placing the handswitch in FULL PURGE causes (1) HV-3197, HV-3196, HV-3198C, and HV-3198B to open (Main purge dampers) and (2) closes HV-2866D and HV-2867D (minipurge dampers). Refueling may continue with mini or main purge in service as long as the automatic closure functions are operable, there was no mention of inoperability of the auto close functions for purge dampers.

029A2.03 Containment Purge
Ability to (a) predict the impacts of the following malfunctions or operations on the Containment Purge System; and (b) based on those predictions, use procedures to correct, control, or mitigate the consequences of those malfunctions or operations: (CFR: 41.5 / 43.5 / 45.3 / 45.13)
A2.03 – Startup operations and the associated required valve lineups

12. Evaluate abnormal plant or equipment conditions associated with the Containment Ventilation and Purge System and determine the local actions needed to mitigate the consequence of the abnormality (OPS40304A12).

2. Evaluate abnormal plant or equipment conditions associated with the Containment Ventilation and Purge System and determine the integrated plant actions needed to mitigate the consequence of the abnormality (OPS52107A02).

CMNT VENT-40304A07 01

QUESTIONS REPORT

for Plant Systems Questions 6-11-2004

CMNT VENT-40304A07 001/HLT/LOCT/RO/C/A (LEVEL 2/3) SYS/029K4.03///LOCT/5

Original

Plant conditions are as follows:

- Unit 1 is shut down in Mode 6 with Containment Minipurge in service.
- A control room operator has inadvertently placed one of the CTMT PURGE DMPRS handswitches to FULL.

Which ONE of the following describes how the containment purge system is affected by this action?

A. The minipurge supply and exhaust fans will stop.

B. A set of minipurge supply and exhaust valves will close and a set of main purge supply and exhaust dampers will open.

C. The main purge supply and exhaust fans will start in high speed.

D. A set of minipurge supply and exhaust valves will close.

Placing the handswitch in FULL PURGE causes (1) HV-3197, HV-3196, HV-3198C, and HV-3198B to open and (2) closes HV-2866D and HV-2867D

A. Incorrect -no fan functions with the HS

B. Correct - this will Main purge valve to open and mini purge to close

C. Incorrect -no fan functions with the HS

D. Incorrect - this is only partially true.

2.11 The following radiation monitors are in operation per FNP-1-SOP-45.0, RADIATION MONITORING SYSTEM, or required action is being taken per Tech. Specs 3.3.6, 3.3.7, and 3.3.8, and TR 13.3.4.

____ / 2.11.1 R-5 Spent fuel pool or portable monitoring instrumentation used to monitor SFP area at least once per 24 hours.

____ / 2.11.2 R-25A or B Spent fuel pool - Gaseous

____ / 2.11.3 R-24A or B - Containment purge system with main or mini purge in operation.

____ / 2.11.4 R-35A or B - Control Room HVAC.

____ / 2.12 The fuel handling area HVAC is in operation per FNP-1-SOP-58.0, AUXILIARY BUILDING HVAC SYSTEM.

____ / 2.13 The direct communications system between the below listed stations is verified available for use within one hour prior to fuel movement.

____ / 2.13.1 Control Room

____ / 2.13.2 Manipulator Crane

____ / 2.13.3 Spent fuel pool side fuel transfer system control panel.

____ / 2.13.4 Reactor side fuel transfer system control panel.

____ / 2.14 Fuel assembly status board is available in the control room.

____ / 2.15 The manipulator crane gripper has been load tested within 100 hours prior to movement of fuel assemblies per FNP-1-STP-36.0, MANIPULATOR CRANE CUTOFF AND LOAD TEST. (Required prior to Cavity flood up, OLL 1848)

____ / 2.16 The manipulator crane auxiliary hoist has been load tested within 100 hours of movement of control rods per FNP-1-STP-36.0, MANIPULATOR CRANE CUTOFF AND LOAD TEST. (Required prior to Cavity flood up, OLL 1848)

____ / 2.17 The Reactor Cavity water level is ≥ 142'2" (≥ 23 feet over the top of the irradiated fuel assemblies seated in the core) within 2 hours prior to movement of control rods within the reactor pressure vessel.

____ / 2.18 The Spent Fuel Pool water level is ≥ 151'6" (≥ 23 feet over the top of irradiated fuel assemblies seated in the storage racks).

2.5.4 Inspect all assembly-to-assembly gaps, assembly-to-baffle gaps, and all top nozzle corner-to-corner junctions during core verification.

2.5.5 If misalignments exist, determine the source of the misalignment. Using normal fuel handling procedures, remove designated assemblies and reseat them in the core as appropriate. Re-inspect all gaps and misalignments that may have been changed by reseating assemblies.

____ 2.6 Perform FNP-1-STP-13.0, REACTOR DECAY TIME, to verify reactor has been
__/__ subcritical for at least 140 hours.

____ 2.7 The reactor coolant system boron concentration is greater than the limits
__/__ specified in the COLR and referenced by Tech. Spec 3.9.1 and has been verified in the last 72 hours per SR 3.9.1.1 prior to the start of head stud detensioning.

____ 2.8 The containment building penetrations are in the following status within 100
__/__ hours prior to the start of core alterations.

____ 2.8.1 The equipment door closed and held in place by a minimum four bolts.
__/__

____ 2.8.2 A minimum of one door in each air lock is closed.
__/__

____ 2.8.3 Each penetration providing direct access from the containment
__/__ atmosphere (except pens 71, 72, 90, and 92 which are addressed in step 2.8.4) shall be either closed by an isolation valve, blind flange or manual valve per FNP-1-STP-18.4, CONTAINMENT MID-LOOP AND/OR REFUELING INTEGRITY VERIFICATION AND CONTAINMENT CLOSURE, OR capable of being closed by an operable automatic containment purge and exhaust isolation valve as tested per FNP-1-STP-18.1, CONTAINMENT PURGE AND EXHAUST ISOLATION TEST MODES 5 & 6.

NOTE:	**Water or air lines which penetrate through the adapter nozzles must be pressurized or isolated with their individual isolation valves.**

____ 2.8.4 Blind flanges are installed at CTMT penetrations 71, 72, 90, and 92,
__/__ OR the special adapter nozzles for these penetrations are installed.

____ 2.8.5 FNP-1-STP-18.4, CONTAINMENT MIDLOOP AND/OR
__/__ REFUELING INTEGRITY VERIFICATION AND CONTAINMENT CLOSURE, has been reviewed and verified to satisfy refueling integrity.

of a prefilter, HEPA filter, and an impregnated activated charcoal filter for absorption of radioiodine on the charcoal surface. Both filtration units normally are secured.

The pre-access filtration fans may be operated from their respective MCC auxiliary relay cabinet located in the auxiliary building. An MCB alarm informs the operator of fan overload, fan low differential pressure, or filter high differential pressure.

Containment Purge System

Refer to Figure 2. The containment purge system is an independent system that supplies and exhausts air to and from containment. Supply air is drawn from the outside atmosphere through a ventilation inlet on the auxiliary building roof. It passes through the inlet supply damper (HV-3202B), through the purge air handling unit (AHU) particulate filter and through the heating coil. The air then passes through the main purge supply fan, through purge supply damper (HV-3198C) and then can pass through main purge supply damper outside CTMT (HV-3198D) or through the minipurge supply fan and supply damper (HV-2866C) into CTMT. The air passes enters CTMT through the main purge or minipurge supply damper (HV-3197 or HV-2866D). Exhaust air is directed from containment through the main purge or minipurge exhaust dampers (HV-3196 or HV-2867D) into the auxiliary building main or minipurge damper (HV3198A or HV-2867C). It then passes through purge exhaust damper 3198B and into the CTMT purge filtration unit. The air passes through a PAC (particulate, absolute, charcoal) filter and then through the main purge exhaust fan and then through the purge outlet exhaust damper (HV3203A) The exhaust air then passes through the auxiliary building main exhaust plenum to the plant vent stack for controlled dispersion to the atmosphere.

The supply portion of the system includes an inlet supply damper, the containment purge air handling unit (AHU), five isolation butterfly valves, and the minipurge supply fan. The exhaust portion of the system includes five isolation butterfly valves, the minipurge exhaust fan, the containment purge filtration unit and cooling valves, the main purge exhaust fan, and an outlet exhaust damper.

The inlet supply damper (HV-3203B) and the outlet exhaust damper (HV-3203A) open when either the containment purge AHU or the minipurge supply fans are running. Damper position indication is provided on the MCB for these dampers.

The containment purge AHU consists of a high-efficiency particulate filter, a heating coil, and the main purge supply fan. The particulate filter cleanses the outside air before it is drawn into containment. The heating coil, which is supplied by the plant hot water heating system, provides a means for heating air entering containment to improve personnel habitability during shutdown operations. The main purge supply fan and the main purge exhaust fan are two-speed fans controlled by a common handswitch on the MCB. Indication is provided on the MCB for both slow and fast fan operation.

The containment purge isolation valves operate in groups controlled by two handswitches on the MCB. One handswitch operates valves HV-3198B and C (open during both full purge and minipurge), valves HV-2867D and HV-2866D (open during minipurge), and valves HV-3196 and HV-3197 (open during full purge). The other handswitch operates HV-3198A and D (open during full purge) and valves HV-2867C and HV-2866C (open during minipurge).

All of the isolation butterfly valves are quick-closing valves that have been designed to close within five seconds of receiving a "T"-signal or high radiation alarm from purge discharge monitors (RE-24A and B). The series alignment of valves within the containment purge system ensures positive tight shutoff of containment from the outside atmosphere when necessary. All valves have valve position indication on MCB.

The minipurge supply and exhaust fans are operated by a common handswitch on the MCB. The single-speed minipurge fans are used when containment purge is required, and the reactor coolant system (RCS) temperature is greater than or equal to 200°F. Full purge may be used only when RCS temperature is less than 200°F.

As shown on Figure 2, the minipurge supply and exhaust fans operate through much smaller ductwork than main purge. Since the ductwork is smaller, the minipurge isolation butterfly valves are much more likely to shut and provide positive isolation of containment than the main purge isolation butterfly valves.

Steam line break accidents and LOCAs are more likely to occur when the plant is above 200°F. For this reason, the minipurge, with its more positive isolation capability, is used above 200°F. Minipurge fan operation is controlled from and indicated on the MCB.

Containment purge line fill and bleed lines have been installed on both the supply and exhaust ducts. These lines allow for surveillance leak tests of the purge line containment

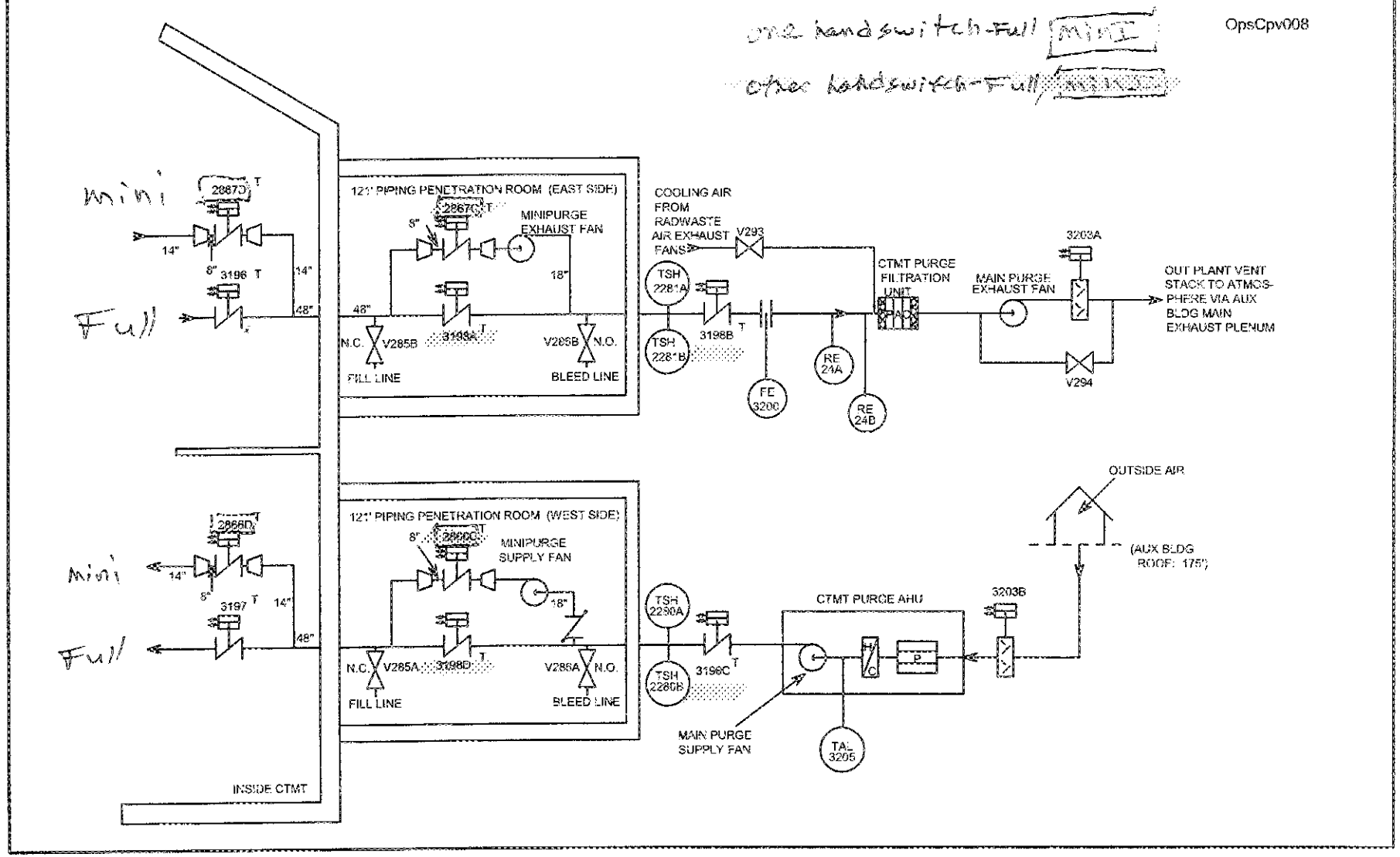

Containment Purge System

Figure 2

33. 029EA2.09 001/1/1/ATWS/MEM 4.4/4.5/NEW/FA011005/RO/

While responding to a nuclear power generation ATWT event, the team is verifying that the Main Turbine is tripped. This is accomplished in accordance with FRP-S.1 by which one of the following?

A. TSLB2, 13-1, 13-2 and 13-3, TURB AUTO STOP, bistables are illuminated; and the DEH Valve Test Display may be used for an alternate indication that the turbine is tripped.

B. TSLB2, 13-1, 13-2 and 13-3, TURB AUTO STOP, bistables are NOT illuminated; and any FIRST OUT annunciator that shows the Main Turbine is tripped may be used for an alternate indication.

C. TSLB2, 14-1,14-2,14-3 and 14-4, TURB STOP VLV CLOSED, bistables are illuminated; and the DEH Valve Test Display may be used for an alternate indication that the turbine is tripped.

D. TSLB2, 14-1 through 14-4, TURB STOP VLV CLOSED, bistables are NOT illuminated; and any FIRST OUT annunciator that shows the Main Turbine is tripped may be used for an alternate indication.

FFRP-S.1 Step 2 and note above
NOTE: The DEH Valve Test Display may be used for alternate indication of turbine stop valve and governor valve position.
2 Check turbine - TRIPPED.
[] TSLB2 14-1 lit
[] TSLB2 14-2 lit
[] TSLB2 14-3 lit
[] TSLB2 14-4 lit

A. Incorrect - TSLB-1 thru 3 will show this the turbine is tripped by autostop oil pressure being low but it is the wrong indication to use IAW FRP-S.1.

B. Incorrect - TSLB-1 thru 3 will show this the turbine is tripped by autostop oil pressure being low but it is the wrong indication to use IAW FRP-S.1. Also the first out annunciators are not indications to be used in the S.1 procedure to check if the turbine is tripped.

C. Correct - **TSLB2, 14-1,14-2,14-3 and 14-4, TURB STOP VLV CLOSED, bistables are illuminated; and the DEH Valve Test Display may be used for an alternate indication that the turbine is tripped.**
this is the correct first method and alternate method to use to ensure the Main Turbine is tripped IAW FRP-S.1.

D. Incorrect - the first out annunciators are not indications to be used in the S.1 procedure to check if the turbine is tripped.

029EA2.09 Ability to determine and interpret the following as they apply to a AWTS: occurrence of a main turbine/reactor trip.

Analyze plant indications to determine the successful completion of any step in FRP-S.1 /FRP-S.2. (OPS52533A07)
Describe the sequence of major actions associated with FRP-S.1/FRP-S.2. (OPS52533A04)

Step	Action/Expected Response	Response NOT Obtained
	NOTE: The DEH Valve Test Display may be used for alternate indication of turbine stop valve and governor valve position.	
2	**Check turbine - TRIPPED.** [] TSLB2 14-1 lit [] TSLB2 14-2 lit [] TSLB2 14-3 lit [] TSLB2 14-4 lit	2 Perform the following. 2.1 Place MAIN TURB EMERG TRIP switch to TRIP for at least 5 seconds. 2.2 <u>IF</u> turbine <u>NOT</u> tripped, <u>THEN</u> close GVs. 2.2.1 Reduce GV position demand signal to zero from DEH panel. [] TURBINE MANUAL depressed [] GV CLOSE depressed [] FAST ACTION depressed

Step 2 continued on next page.

Page Completed

If neither a manual reactor trip nor deenergizing the CRDM MG sets is effective in inserting control rods, the operator should begin manually inserting them. Control rods should be inserted using whichever mode of rod control produces the fastest inward rod speed. In manual, rod speed is fixed at 48 steps per minute. In automatic, rod speed is variable from eight steps per minute up to 72 steps per minute, depending upon the power and temperature mismatch present.

Speed indicator 408 will display demanded rod speed. In manual, SI-408 should read 48 steps per minute. In order to determine demanded rod speed for automatic rod control, auto must be selected on the bank selector switch and SI-408 monitored. If auto rod speed is greater than 48 steps per minute, rods should be left in automatic. When auto rod speed decreases back to 48 steps per minute or less, manual should be selected and control rods driven in by the operator.

DEH Valve Test Display May Be Used for Alternate Indication

The purpose of tripping the main turbine during the performance of FRP-S.1 due to an ATWT event is to isolate steam flow through the turbine. Indication that the main turbine throttle valves (TVs) are closed (steam flow isolated) is provided by bistables 14-1 through 14-4 on trip status light box (TSLB) 2. If the TVs cannot be closed, steam flow should be stopped by closing the governor valves (GVs), using the DEHC system in manual control. Verification of GV positions, or an alternate indication of TV positions, is provided by monitoring valve position indications on the valve test display page. This note informs the operator that this DEH display may be used to verify TV and GV positions.

Turbine Trip

Tripping the turbine during an ATWT event has characteristically created some frustration. It seems logical to leave the heat sink available for the RCS if a reactor trip is required but has not occurred. Other actions are initiated to shut down the reactor, however, and the turbine must be tripped (steam flow isolated) to prevent an uncontrolled cooldown of the RCS due to the steam flow the turbine would require. A turbine trip is essential if the initiating event for the ATWT was a loss of main feedwater. For this ATWT event, a turbine trip is required within 30 seconds to preserve steam generator inventories. For other postulated ATWT events (with the exception of the loss of load ATWT), manually tripping the turbine may result in a somewhat higher RCS pressure, depending upon the initiating event and time in core life. However, this action has been determined to be necessary based on the analysis run for the various ATWT events. Since there are many initiating ATWT events and time is a critical factor in responding to these events, a diagnosis of the initiating event would not be feasible and separate guidance for different ATWT events would complicate training and possibly delay the timely performance of necessary operator actions. As a result, the turbine is tripped as part of the immediate actions in FRP-S.1.

The turbine is verified tripped as indicated by all four turbine stop (throttle) valves being closed. TSLB 2, bistables 14-1 through 14-4, when lit, indicate that the TVs are closed. If the reactor trip breakers are opened, the P-4 permissive will generate a turbine trip signal, which should trip the turbine. Under these circumstances, monitoring TSLB2 for proper bistable indication should inform the operator the turbine is tripped. If the reactor trip breakers are still closed and no other turbine trip signals are present, then a turbine trip may not be verified. If a turbine trip is not verified, the operator is directed to the RNO column to perform actions to close all turbine stop valves or all GVs. An attempt to manually trip the turbine is accomplished by holding the MN TURB EMERG TRIP switch in the trip position for approximately five seconds. The trip switch is held for five seconds to ensure that auto stop oil pressure decreases sufficiently to allow the overspeed trip device cup valve to unseat. With the cup valve unseated, the auto stop oil system will remain depressurized once the handswitch is released. Verification that the turbine is tripped after five seconds would again be performed by monitoring TSLB2 throttle valve position indications.

If attempts to trip the turbine are unsuccessful, some other action must be taken to isolate the steam flow through the turbine. A manual decrease in turbine load at the maximum rate will also reduce steam flow in a delayed manner. An attempt to close the governor valves is made in lieu of securing the EH fluid pumps as directed for these circumstances in EEP-0. Securing the EH fluid pumps should result in closure of the TVs but will also cause a loss of any running steam generator feed pump (SGFP)(s) which may be providing necessary feedwater to the steam generators.

If steam flow cannot be isolated to the turbine by closing either all TVs or all GVs, then the main steam isolation valves (MSIVs) and main steam isolation bypass valves should be closed.

Closing the MSIVs is accomplished by taking the handswitches for each MSIV to the closed position. This energizes a solenoid in the air supply flow path to the MSIV, venting air from the actuator, and allowing the disc for each valve to drop into the flow stream, which will force the valve closed. The MSIVs have been known to bind in the open position. If the valve binds (and instrument air is available), the test cylinder may be used in an attempt to close the valve. Past experience has shown that using the test cylinder has been helpful in achieving valve closure when binding occurs. When air is supplied to the test cylinder, it will attempt to move the valve disc in the closed direction, possibly freeing it from being bound open.

AFW Pumps

Under accident conditions, auxiliary feedwater (AFW) provides feedwater flow to the steam generators to provide for decay heat removal. During an ATWT event, the reactor may still be at power, and more than just decay heat will be transferred to the steam generators. As a result, significant amounts of AFW flow may be required to maintain a secondary heat sink. To ensure an adequate amount of AFW is available, all available AFW pumps are verified started. Both motor-driven auxiliary feedwater (MDAFW) pumps should be verified started by monitoring amperage indications for each pump on the MCB > 0. These pumps may already be running as a result of an auto start signal; if not, they should be started and amps verified greater than zero. The turbine-driven auxiliary feedwater (TDAFW) pump should also be verified started. Monitor light box (MLB) 4, bistables 1-3, 2-3, and 3-3 will provide indications that HV-3235A, HV-3235B, and HV-3226, respectively, are opened and TDAFW pump speed should be checked > 0 revolutions per minute (rpm) with the TDAFW pump speed controller adjusted to 100%.

MAIN CONTROL BOARD ANNUNCIATOR PANEL G

A1 SR HI FLUX RX TRIP	B1 PRZR HI PRESS RX TRIP	C1 OPΔT RX TRIP	D1 RCP BUSSES UV RX TRIP	E1 ONE LOOP LO FLOW OR RCP BKR OPEN RX TRIP	F1 CTMT PRESS HI-1 RX TRIP SI	G1 AMSAC TURB TRIP AFW START	H1 MAN TURB TRIP	J1 TURB BRG OIL PRESS LO TURB TRIP
A2 IR HI FLUX RX TRIP	B2 PRZR LO PRESS RX TRIP	C2 OTΔT RX TRIP	D2 RCP BUSSES UF RX TRIP	E2 TWO LOOP LO FLOW OR RCP BKRS OPEN RX TRIP	F2 MAN RX TRIP SI		H2 TURB AUTO STOP OIL TURB TRIP	J2 LO VAC TURB TRIP
A3 PR HI FLUX LO RNG RX TRIP	B3 PRZR HI LVL RX TRIP				F3 MAN RX TRIP		H3 DEHC DC PWR FAILURE TURB TRIP	J3 TURB OVERSPEED TURB TRIP
A4 PR HI FLUX HI RNG RX TRIP	B4 PRZR LO PRESS RX TRIP SI	C4 1A SG LO-LO LVL RX TRIP	D4 1B SG LO-LO LVL RX TRIP	E4 1C SG LO-LO LVL RX TRIP	F4 RX TRIP CAUSED BY TURB TRIP			J4 TURB THRUST BRG WEAR TURB TRIP
A5 PR HI PWR RATE RX TRIP	B5 STM LINE LO PRESS RX TRIP SI	C5 1A SG STM LINE HI ΔP RX TRIP SI	D5 1B SG STM LINE HI ΔP RX TRIP SI	E5 1C SG STM LINE HI ΔP RX TRIP SI		G5 1A SG HI-HI LVL TURB TRIP	H5 1B SG HI-HI LVL TURB TRIP	J5 1C SG HI-HI LVL TURB TRIP

34. 034K4.03 001/2/2/FUEL HANDLING/MEM 2.5/3.2/NEW/FA011005/RO/

Which one of the following is the device on the **Unit 1** manipulator crane that will protect the core internals from excessive lifting force in the event it becomes inadvertently engaged during lifting operations and describes what is accomplished by this device?

A. Hoist Weight Indicator; stops the Hoist movement in the UP direction and lights an Overload lamp.

B. Slack Cable Interlock; stops the Hoist movement in the UP direction and lights a Slack Cable lamp.

C. Gripper Weight Indicator; closes the Gripper air solenoid valve to prevent the gripper from operating and has no indicating lamp.

D. Hoist Gripper Interlock; stops the Hoist movement in the UP direction and closes the Gripper air solenoid valve to prevent the gripper from operating and has no indicating lamp.

A. Correct - **Hoist Weight Indicator; stops the Hoist movement in the UP direction and lights an Overload lamp.**
This is per page 28 of OPS-52108D and FNP-1-FHP-5.13 step 1.1**.
Also **FNP-1 FHP-5.13 page 6**
**1.1.5.6 Hoist - Weight Indicator. The weight indicator is connected into the hoist drive circuit to stop the hoist in the up direction and light the Overload lamp when the sensed weight is greater than 2825 lbs (15% above the combined weight of gripper tube, fuel assembly and RCC assembly).

B. Incorrect - In the down direction, the weight indicator stops the hoist drive and lights the Slack Cable lamp when the suspended weight drops to approximately 600 lbs. This is not for overload protection.

C. Incorrect - This indicator ensures there is no fuel assembly suspended from the gripper so the gripper can be released or disengaged.This is not for overload protection.

D. Incorrect -this enables operation of the hoist in both the up and down direction to prevent operation of the hoist with a partially engaged gripper on a fuel asembly. This does not clos ethe solenoid valve for the Gripper. This is not for overload protection.

Technical Requirement 13.9.3, Manipulator Crane BASES
The OPERABILITY requirements for the manipulator cranes ensure the following. The manipulator cranes will be used for movement of control rods and fuel assemblies. Each crane has sufficient load capacity to lift a control rod or fuel assembly. **The core internals and pressure vessel are protected from excessive lifting force in the event they are inadvertently engaged during lifting operations.**

034 K4.03 Fuel Handling Equipment Knowledge of the design feature(s) and/or interlock(s) which provide for the following:
Overload protection.

Explain the purpose and operation including the design features and functions, capacities, and protective interlocks of the following major components associated with the Fuel Storage, Handling and Refueling System (OPS40305B02):
• Manipulator Crane

Discuss the operation and alignment of each major component including precautions and limitations of operation, and applicable procedures, associated with the Fuel Storage, Handling and Refueling System including (OPS40305B11):
• Manipulator Crane
• Hoist Control
• Manipulator Crane Checkout

**1.1.4.6 Hoist - Weight Indicator. The weight indicator is connected into the hoist drive circuit to stop the hoist in the up direction and light the Overload lamp when the sensed weight is greater than 2825 lbs (15% above the combined weight of gripper tube, fuel assembly and RCC assembly). In the down direction, the weight indicator stops the hoist drive and lights the Slack Cable lamp when the suspended weight drops to approximately 600 lbs. A B

The overload interlock, in the up direction, can be bypassed through the overload interlock bypass switch. The slack cable switch, in the down direction, cannot be bypassed.

A separate overload switch is provided in the sheave support as a backup to the weight indicator. This switch trips at approximately 25% above the normal load. There is no readout or indicating light for this switch nor is there a bypass circuit.

1.1.4.7 Hoist Slow Zones. The hoist drive circuit is interlocked through geared limit switches in the hoist to cut out the main hoist control and transfer control to the pushbutton box at critical elevations of gripper travel. There is no bypass provided to cut out the slow zones.

The upper slow zone is approximately 20 inches and is set to operate as the bottom of a fuel assembly in the gripper is entering or leaving the top of the core. This slow zone is operable only in the core area and only when the gripper is engaged, indicating that there is a fuel assembly in the gripper.

The lower slow zone is effective both raising and lowering for approximately 10 inches above the full down position of the fuel in the core. This slow zone operates with the gripper either engaged or disengaged.

1.1.4.8 Gripper Lock. The gripper mechanism contains a mechanical spring locking device that locks the fingers in either the engaged or disengaged position unless the gripper is supported on top of a fuel assembly and the gripper tube weight is exerting a downward force of about 250 lbs. The lock will prevent operation of the gripper even if the interlock in the air supply line is bypassed and the operating cylinder is pressurized.

Slow Zone indicating lamps are located on the support structure to the right of the control console. These lamps light when the gripper is passing through the automatic slow zone. The lamps indicate elevation only and do not necessarily mean the slow zone is in effect.

Interlocks and Stops

Bridge-Trolley-Hoist - The bridge, trolley, main hoist, and hoist push button controls are mutually interlocked through the use of the same control panel such that only one drive is operable at a time. When one of the control handles is moved off neutral the other drive circuits are opened. There is no way of bypassing this interlock.

Gripper Tube Up - The gripper tube must be at its top stop position to energize the bridge or trolley circuits. The top stop circuit can discriminate between an empty gripper and a gripper with a fuel assembly and will stop the hoist at the correct position automatically.

Bridge-Trolley Position - Bridge and trolley positions are mutually interlocked to limit the outer mast to a path of travel that clears the guide stud in the vessel and the upper internals in their storage position. With the outer mast over the core area, trolley travel towards the transfer system center line (refueling cavity) is stopped at the last row of fuel assemblies to protect the guide stud on this side of the vessel. Bridge travel towards the transfer system (refueling cavity) is stopped when the mast passes over the end core coordinate unless the mast is positioned in the zone between the control rod change fixture center line and the transfer system (refueling cavity) center line. When the bridge is beyond the core area, trolley travel is limited to this zone. On the return trip from the transfer system (refueling cavity) to the core, the interlocks keep the mast following the same travel path in reverse.

Hoist-Gripper - The gripper must be in either the ENGAGED or DISENGAGED position, as indicated by ENGAGED or DISENGAGED indicating lamps to enable operation of hoist in either the up or down direction. D

Gripper-Weight Indicator - The air line to the gripper disengage controls is closed by a solenoid valve until the load sensed by the weight indicator drops below approximately 950 lbs indicating that there is no fuel assembly suspended from the gripper. C

Hoist-Weight Indicator - The refueling machine load control system (RMLCS) for Unit 1 lights the hoist OVERLOAD lamps and stops the hoist drive when the weight suspended from the hoist exceeds the limits set per the refueling procedure. The overload limits are set to prevent fuel A

assembly damage and are active in both the hoist up and hoist down directions. In addition, the RMLCS stops hoist movement and lights the SLACK CABLE lamp when the suspended weight drops to approximately 450 lbs. The overload interlock in the up direction can be bypassed using the OVERLOAD INTERLOCK BYPASS switch. The overload interlock in the down direction cannot be bypassed.

A separate mechanical overload switch is provided on the sheave support as a backup to the weight indicator. The switch trips at approximately 25 percent above the normal load. There is no readout or indicating light for this switch, nor is there a bypass circuit.

Hoist Slow Zones - The hoist drive circuit is interlocked through geared limit switches in the hoist to cut out the main hoist control and transfer control to the push button box at critical elevations of gripper travel. There is no bypass provided to cut out the slow zones.

The upper slow zone spans approximately 20 inches and is set to operate as the bottom of a fuel assembly in the gripper is entering or leaving the top of the core. This slow zone is operable only in the core area and only when the gripper is engaged, indicating that there is a fuel assembly in the gripper.

When raising and lowering, the lower slow zone is effective for approximately 10 inches above the fully down position of the fuel in the core. This slow zone operates with the gripper either engaged or disengaged.

Gripper Lock - The gripper mechanism contains a mechanical spring-locking device that locks the fingers in either the ENGAGED or DISENGAGED position unless the gripper tube weight is exerting a downward force of about 450 lbs. The lock will prevent the operation of the gripper even if the interlock in the air supply line is bypassed and the operating cylinder is pressurized.

Unit 1 Gripper Operation and Interlocks

(Figures 8, 11, and 25)

The gripper assembly is mounted on the bottom of the gripper tube, which telescopes into and out of the manipulator crane outer mast. Raising and lowering of the gripper tube is accomplished by the gripper tube hoist. This hoist is located on the manipulator crane trolley adjacent to the mast. The gripper assembly is air-operated; it requires air pressure to disengage the gripper. The gripper air cylinder is a double-acting cylinder and is spring-loaded to the engage position. Air pressure is required to disengage the gripper and is used to assist the spring force to engage the gripper. The gripper is designed with a couple of safety interlocks that are designed to prevent accidental disengagement of the gripper while a fuel assembly is suspended; these are the mechanical interlock and the gripper weight indicator interlock.

The mechanical interlock is a mechanical locking device that will hold the gripper fingers in the engaged or disengaged position unless it is operated. The mechanical locking device is operated by lowering the gripper tube onto a fuel assembly. Once the guide pins have engaged the fuel assembly, the continued downward motion of the gripper tube allows the weight of the mast to compress the springs and lift the locking device up. When slack cable condition is present (as indicated by the slack cable light coming on), the locking device will have been lifted out of the slots in the gripper fingers, permitting them to operate. With the gripper in the engaged or disengaged position, raising the mast removes the load and allows the spring to force the mechanical locking device back down into position, locking the fingers. When the slack cable light is lit, there is approximately 450 pounds of indicated weight and about 500 pounds of weight exerted on the gripper. That is enough downward force to release the mechanical interlock (mast weight = 950 pounds; at indicated weight of 450 pounds [slack cable light lit], there is 500 pounds exerted on the gripper).

The gripper weight indicator interlock is an electrical signal that energizes a solenoid valve to supply air to the "disengage" gripper controls. When the indicated weight as seen by the RMLCS is > 950 pounds, the air supply solenoid is deenergized, and air is isolated to the "disengage" gripper controls. The solenoid valve is energized, and air to the "disengage" gripper controls is restored when the indicated weight is < 950 pounds. Since the mast weighs 950 pounds, this interlock ensures that no fuel assembly is suspended from the gripper prior to allowing air to be

1.1.4.2 Gripper Tube Up the gripper tube must be at one of the top stop positions circuits. The top stop circuit can discriminate between an empty gripper and a gripper with a fuel assembly and will stop the hoist at the correct position automatically.

1.1.4.3 Bridge-Trolley Position Bridge and trolley positions are mutually interlocked to limit the outer mast to a path of travel that clears the guide stud in the vessel and the upper internals in their storage position.

With the outer mast over the core area, trolley travel towards the transfer system centerline is stopped at the last row of fuel assemblies to protect the guide stud on this side of the vessel. Bridge travel towards the transfer system is stopped when the mast passes over the end core coordinate. At this point the trolley can be positioned over the Transfer System center line which in turn releases the bridge drive to continue to the Transfer System loading point.

During travel down the transfer canal the trolley drive is interlocked so the mast cannot be moved off the canal center line until the bridge reaches its end of travel stops. The trolley point to allow the mast to be positioned over the RCC Change Fixture. The bridge can also be moved approximately 20 in. to reach both fuel positions in the RCC Change Fixture.

On the return trip from the transfer system to the core the interlocks keep the mast following the same travel path in reverse.

1.1.4.4 Hoist-Gripper. The gripper must be in either the engaged or disengaged position, as indicated by Engaged or Disengaged indicating lamps, to enable operation of the hoist in either the Up or Down direction. D

1.1.4.5 Gripper - Weight Indicator. The air line to the gripper control knob is closed by a solenoid valve until the load sensed by the weight indicator drops below 950 lbs, indicating that there is no fuel assembly suspended from the gripper. C

1.2 Control Console

a. Turn on ACB circuit breaker located inside the manipulator crane control console. Make sure all by-pass switches in control console are in the off position.

Check all indicating lights on the control console and slow zone indicating lights for burned out bulbs before any operational movement of bridge, hoist or trolley. All lights are push to test.

**1.3 Dillon Readout

a. Turn Dillon readout power switch to on and check range selector in A position. The weight of the inner mast (empty) should read approximately 900 lbs on the readout scale.

b. The three limiting circuits should be set to the following readings. B
Limiting circuit 1 is the slack cable circuit, which is set at 600 lbs descending. WHEN the readout shows 600 lbs OR less, THEN the hoist will not operate in the down direction and the blue slack cable light on the console will be illuminated.

Limiting circuit #2 is the gripper interlock circuit. Limiting circuit #2 should be set at 1200 lbs ascending. WHEN the readout shows 1200 lbs, THEN the gripper air solenoid valve will not operate. C

Limiting circuit #3 is the overload circuit. Limiting circuit #3 should be set at 2700 lbs ascending. A

WHEN the readout shows 2700 lbs, THEN the hoist will not operate in the up direction and the red overload light on the console will be illuminated.

These three circuits can be checked to see if they are functioning properly by adjusting the tare weight to those settings. By adjusting the tare weight to 600 lbs the blue slack cable light will illuminate. By adjusting the tare to read 1200 lbs, you will be able to hear an audible click, this cuts out the gripper solenoid valve. By adjusting the tare to read 2700 lbs the red overload light will illuminate on the console. Adjust the tare weight back to the original setting of 0 lbs.

IF any of the circuits need adjustment, THEN refer to the Dillon readout section of the manipulator crane manual for recalibration of the readout and limiting circuits.

FARLEY NUCLEAR PLANT
UNIT 1
SURVEILLANCE TEST PROCEDURE STP-36.0

MANIPULATOR CRANE CUTOFF AND LOAD TEST

1.0 Purpose

To demonstrate the operability of the manipulator crane by performing an automatic load cutoff and load test.

2.0 Acceptance Criteria

2.1 The main hoist automatic load cutoff operates at a hoist load of less than or equal to 2850 pounds.

2.2 The main hoist lifts and holds a load of at least 3250 pounds.

2.3 The auxiliary hoist and its associated spring scale lifts and holds a load of at least 700 pounds.

NOTE: Asterisked steps (*) are those associated with Acceptance Criteria.

3.0 Initial Conditions

_____ 3.1 The revision of this procedure has been verified to be the current revision and correct unit for the task. (OR 1-98-498)

_____ 3.2 The test shall be performed when the plant is shutdown.

NOTE: The intent of the following step is to allow any needed repairs to be made if the test is unsuccessful. This step may be N/A'd following initial refueling checkouts with either Shift Supervisor or Refueling Coordinator approval by initial / date next to step.

_____ 3.3 The test should be performed before the reactor cavity is flooded for refueling.

_____ 3.4 Verify the load control system is calibrated per the latest (current) Westinghouse Refueling Procedure, Dry Setup Data Minimum.

_____ 3.5 A calibrated 1000 lb. or 2000 lb. spring scale or calibrated load cell is available.

Serial No. _____ Cal Due Date _____

____ 3.6 Verify that the Initial Conditions listed in FNP-1-FHP-5.13, Manipulator Crane, have been met with the exception of the limit switch checks of checklist 5.13B OR manipulator crane checkout of the Westinghouse Refueling Procedure has been completed (section 9.2.2.A).

4.0 Precautions and Limitations

4.1 Have the crane operator observe caution when the Trolley interlock is bypassed to attach hoist mast to adapter attachment.

4.2 Only the applicable sections being tested need to be signed off. The other sections can be marked N/A with the Shift Supervisor's review and approval as designated by his initial next to the steps that are marked N/A/

5.0 Instructions

____ 5.1 Position the manipulator crane main hoist mast directly above the adapter attachment.

____ 5.2 Attach the gripper tube to the adapter.

NOTE: The overload light will illuminate on underload (slack cable) as well as overload.

____ 5.3 Ensure the Load Control System is operational.

____ *5.4 Raise the gripper. WHEN the load cutoff stops the gripper movement THEN verify that the red overload light is illuminated AND record the reading on the Load Control System remote readout indicator.

Load Control System Remote Indication_____

ACCEPTANCE CRITERIA: Load Control System reading ≤ 2850 pounds.

____ 5.5 Release the load and verify that the red overload light is not illuminated.

____ 5.6 Bypass the raise limits using the console keyboard on the Load Control System. Refer to the Westinghouse Refueling Procedure for guidance.

____ 5.7 Load the gripper to 3250 pounds by overriding the electric brake and adjusting the load with the manual hand wheel. Hold for at least one (1) minute.

ACCEPTANCE CRITERIA: > 3250 pounds for ≥ 1 min.

____ 5.8 Release the load and disconnect the gripper tube from the test weight.

_____ 5.9 Reinstate raise limits using console keyboard on the Load Control System.

_____ 5.10 Verify the auxiliary hoist spring scale or calibrated load cell is installed.

_____ 5.11 Position the auxiliary hoist directly above test attachment.

_____ 5.12 Attach the auxiliary hoist to the test attachment or to bridge of crane using rigging and a 1000 lb. or 2000 lb. spring scale or the load cell.

_____ *5.13 Manually operate the auxiliary hoist to load the auxiliary hook to 700 lbs. for at least one (1) minute.

ACCEPTANCE CRITERIA: > 700 pounds for ≥ 1 min.

_____ 5.14 Release the load and disconnect the hook from the test attachment.

6.0 References

6.1 File No. U-183877A, Instruction Manual-Reactor Cavity Manipulator Crane.

6.2 Westinghouse Nuclear Training Manual.

6.3 FNP-1-FHP-5.13, Manipulator Crane.

6.4 FSAR section 9.1.4.

6.5 PCN 87-1-4271.

{6.6 Technical Requirements Manual.}

The hoist has a second set of controls in the pushbutton box on the side of the console. These pushbuttons operate the hoist at a preset speed of 2 fpm. Control of the hoist is automatically transferred to the pushbuttons at certain critical elevations of the gripper; although, the pushbuttons can be used at any elevation. It should be noted that the purpose of the pushbuttons is to provide an interlock against high speed at certain elevations. They are not necessarily the best or slowest control. Slower speeds and finer control are provided using the main control handle.

1.1.2 Control Console

The control console has switches and indicating lamps as follows:

1.1.2.1 Bridge Trolley and Hoist control levers control their respective drive in the direction indicated on the panel. See Section 1.1.1.

1.1.2.2 Hoist Pushbuttons drive the hoist in the direction indicated at speed of 2 fpm. Automatic transfer of control to these pushbuttons is described in Section 1.1.1.

1.1.2.3 Gripper operating knob turns a pneumatic plug valve the delivers cylinder to disengage the gripper, and vents the cylinder to engage.

1.1.2.4 Air Pressure gage indicates air pressure in the control panel. Normal air pressure should be 70 - 100 psig.

1.1.2.5 Gripper Disengaged indicating lamp lights when the gripper is in the fully disengaged position.

1.1.2.6 Gripper Engaged indicating lamp lights when gripper is in fully engaged position.

**1.1.2.7 Overload indicating lamp lights when the weight indicator reads excessive weight on hoist. Hoist drive up will stop when this lamp lights.

1.1.2.8 Tube Up indicating lamp lights when the gripper tube has reached the top limit position for carrying a fuel assembly.

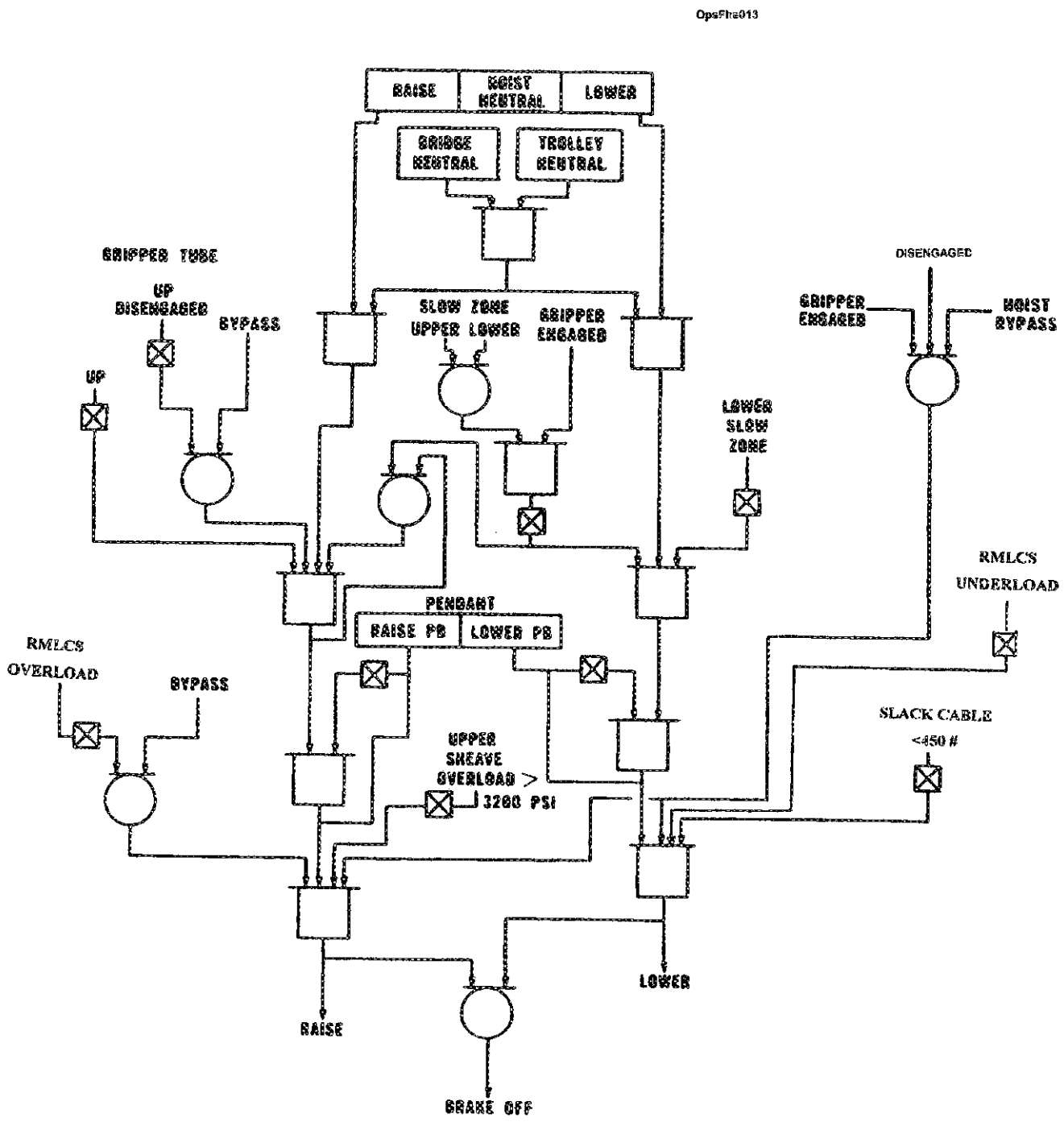

Manipulator Crane Hoist Control

Figure 21

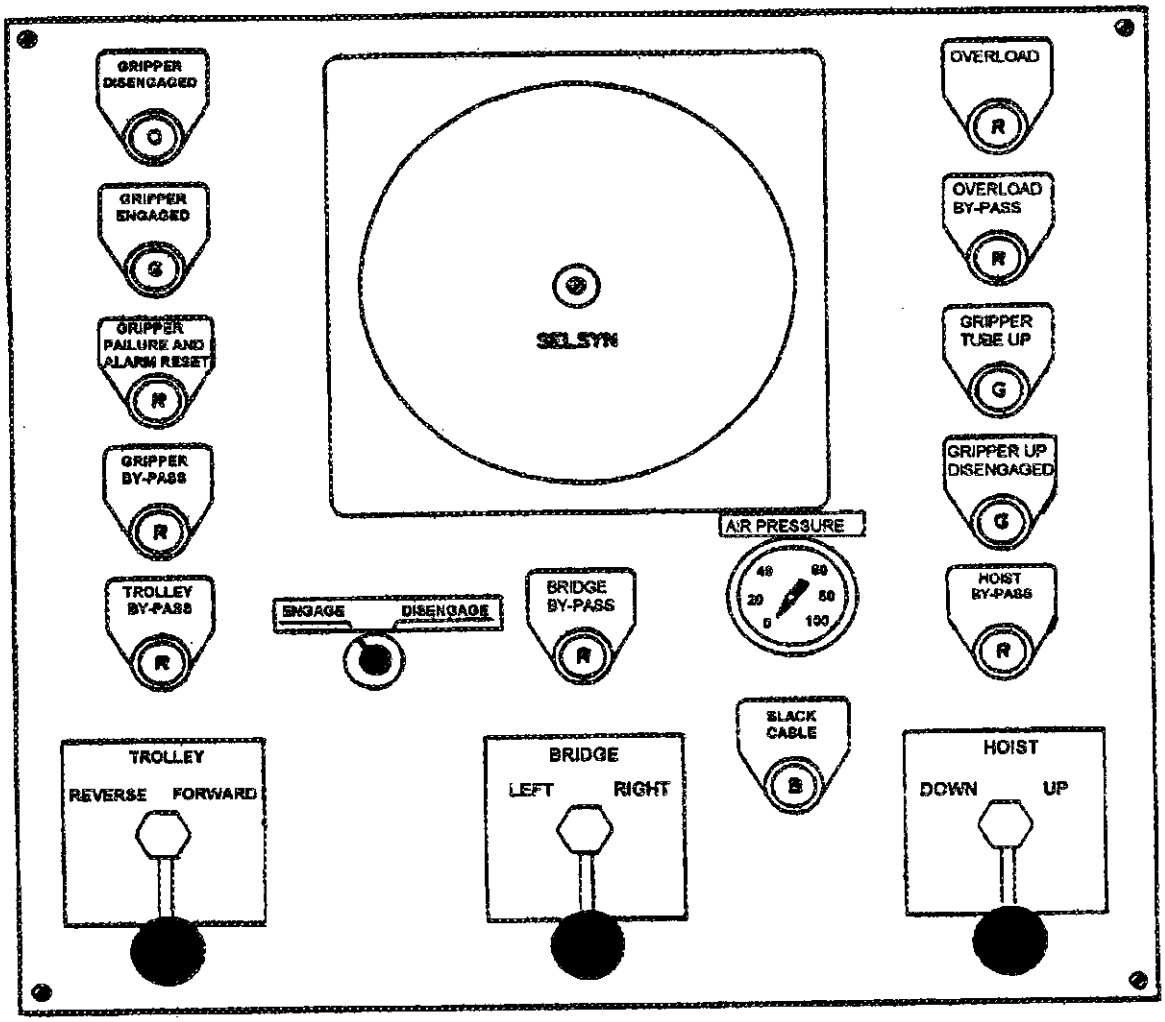

Unit 1 Manipulator Crane Control Panel

Figure 9

13.9 Refueling Operations

TR 13.9.3 Manipulator Crane

TR 13.9.3 The manipulator crane and auxiliary hoist shall be used for movement of drive rods or fuel assemblies and shall be OPERABLE with:

a. The manipulator crane used for movement of fuel assemblies having:

1) A minimum capacity of 3250 pounds, and

2) An overload cut off limit less than or equal to 2850 pounds.

b. The auxiliary hoist used for movement of control rods having:

1) A minimum capacity of 700 pounds, and

2) Load indicators which shall be used to assure that loads in excess of 600 pounds are not lifted.

APPLICABILITY: During movement of drive rods or fuel assemblies within the reactor pressure vessel.

----------NOTE----------
TR 13.0.3 is not applicable.

ACTIONS

CONDITION	REQUIRED ACTION	COMPLETION TIME
A. Manipulator crane inoperable.	A.1 Suspend use of manipulator crane from operations involving the movement of fuel assemblies within the reactor pressure vessel.	Immediately

ACTIONS

CONDITION	REQUIRED ACTION	COMPLETION TIME
B. Auxiliary hoist inoperable.	B.1 Suspend use of auxiliary hoist from operations involving the movement of control rods within the reactor pressure vessel.	Immediately

TECHNICAL REQUIREMENT SURVEILLANCES

SURVEILLANCE		FREQUENCY
TRS 13.9.3.1	Verify manipulator crane operability by: a. Performing a load test of ≥ 3250 pounds, and b. Demonstrating operation of the automatic load cutoff when the crane load exceeds 2850 pounds.	Once within 100 hours prior to the start of movement of fuel assemblies within the reactor pressure vessel
TRS 13.9.3.2	Verify auxiliary hoist and associated load indicator operable by performance of a load test ≥ 700 pounds.	Once within 100 hours prior to the start of movement of drive rods within the reactor pressure vessel

B 13.9 REFUELING OPERATIONS

BASES

TR 13.9.1 Decay Time

The minimum requirement for reactor subcriticality prior to movement of irradiated fuel assemblies in the reactor pressure vessel ensures that sufficient time has elapsed to allow the radioactive decay of the short lived fission products. This decay time is consistent with the assumptions used in the accident analyses.

TR 13.9.2 Communications

The requirement for communications capability ensures that refueling station personnel can be promptly informed of significant changes in the facility status or core reactivity conditions during CORE ALTERATIONS.

TR 13.9.3 Manipulator Crane

The OPERABILITY requirements for the manipulator cranes ensure that:

1) manipulator cranes will be used for movement of control rods and fuel assemblies,
2) each crane has sufficient load capacity to lift a control rod or fuel assembly, and
3) the core internals and pressure vessel are protected from excessive lifting force in the event they are inadvertently engaged during lifting operations.

TR 13.9.4 Crane Travel- Spent Fuel Storage Building
TR 13.9.5 Spent Fuel Cask Crane

The restriction on movement of loads in excess of the nominal weight of a fuel and control rod assembly and associated handling tool over other fuel assemblies in the storage pool ensures that in the event this load is dropped:

1) the activity release will be limited to that contained in a single fuel assembly, and
2) any possible distortion of fuel in the storage racks will not result in a critical array.

This assumption is consistent with the activity release assumed in the accident analyses.

(continued)

Technical Requirement 13.9.3, Manipulator Crane

The manipulator crane and auxiliary hoist shall be used for movement of drive rods or fuel assemblies and shall be OPERABLE with:

> The manipulator crane used for movement of fuel assemblies having a a minimum capacity of 3250 pounds, and an overload cut off limit less than or equal to 2850 pounds.
>
> The auxiliary hoist used for movement of control rods having a minimum capacity of 700 pounds, and load indicators which shall be used to assure that loads in excess of 600 pounds are not lifted.

The requirement is applicable during movement of drive rods or fuel assemblies within the reactor pressure vessel. TR 13.0.3 is not applicable.

If the manipulator crane is inoperable, immediately suspend use of the manipulator crane from operations involving the movement of fuel assemblies within the reactor pressure vessel. If the auxiliary hoist is inoperable, immediately suspend use of the auxiliary hoist from operations involving the movement of control rods within the reactor pressure vessel.

The OPERABILITY requirements for the manipulator cranes ensure the following. The manipulator cranes will be used for movement of control rods and fuel assemblies. Each crane has sufficient load capacity to lift a control rod or fuel assembly. The core internals and pressure vessel are protected from excessive lifting force in the event they are inadvertently engaged during lifting operations.

The surveillance states to verify manipulator crane operability by performing a load test of ≥ 3250 pounds, and demonstrating operation of the automatic load cutoff when the crane load exceeds 2850 pounds once within 100 hours prior to the start of movement of fuel assemblies within the reactor pressure vessel. In addition, the auxiliary hoist and associated load indicator shall be verified operable by performance of a load test ≥ 700 pounds once within 100 hours prior to the start of movement of drive rods within the reactor pressure vessel.

35. 035K6.02 001/1/1/ATMOS/C/A 3.5*/3.4*/MOD/FA011005/RO/

The following plant conditions exist on Unit 2:

- The reactor has been tripped due to loss of instrument air.
- No station air compressors are running.
- 2A emergency air compressor has been started and is running.
- Tavg is stable at 556°F and being controlled by the lowest set pressure SG code safeties.
- SG Atmospheric Relief Valves (ARVs) are being lined up locally in the lower equipment room to control SG pressure.

The air regulator for the 2A ARV fails and 50 psig is inadvertently admitted to the valve actuator. Which one of the following is correct regarding SG pressure, the ARV position and the effects on the RCS temperature?

A. 2A SG pressure will lower rapidly, the 2A ARV will be full open and a large cooldown of the RCS will commence.

B. 2A SG pressure will lower slowly, the 2A ARV will be partially open and a slow cooldown of the RCS will commence.

C. 2A SG pressure will remain constant, the 2A ARV will be closed and RCS temperature will remain at the current value.

D. 2A SG pressure will lower slowly, the 2A ARV will be partially open just enough to keep the SG code safeties closed and RCS temperature will remain at the current value.

SOP-62.0

CAUTION: Atmospheric reliefs will start to open at 24 ± 2 psig and will be full open at 45 psig. Observe local air supply pressure gauge N2P18PI2872 AB (BB,CB). IF the atmospheric relief is full open, THEN Tech Spec cooldown limits may be exceeded.

A. Correct - **2A SG pressure will lower rapidly, the 2A ARV will be full open and a large cooldown of the RCS will commence.**
This is correct due to the fact that the valve is full open at 45# pressure, on one loop this will cause SG pressure to drop quickly and become 100 psid lower than the other 2 SGs which will cause a SI to occur.

B. Incorrect; per caution the atmospheric will be full open 45#, a large cooldown will commence and the ARV will be full open, not partially open and a large cooldown will result.

C. Incorrect - per caution the atmospheric will be full open 45#, a large cooldown will commence and the ARV will be full open, not closed.

D. Incorrect; per caution the atmospheric will be full open 45#, a large cooldown will commence and the ARV will be full open, not partially open and a large cooldown will result.

035K6.02 Steam Generator system - Knowledge of a Loss or malfunction of the following will have on the S/GS: secondary PORV

Describe the local actions needed to support plant operation during normal, abnormal and emergency conditions associated with the Main and Reheat Steam System (OPS40201A09).

Explain the purpose and operation including the design features and functions, capacities, and protective interlocks of the following major components associated with the Main and Reheat Steam System (OPS40201A02):
• N-16 Primary to Secondary Leak Detection System
• Main Steam Atmospheric Relief Valves

modified from MN&RHT STM-40201A11 #9

original question

QUESTIONS REPORT
for 1 HLT-29 EXAM

MN&RHT STM-40201A11 009/HLT/LOCT/RO/C/A (LEVEL 2/3) SYS////LOCT/G

The following plant conditions exist on Unit 2:

- The reactor has been tripped due to loss of instrument air
- No station air compressors are running
- SG atmospheric reliefs are being controlled locally in the lower equipment room
- 2A emergency air compressor is running
- Tavg is stable at 555°F and being controlled by the lowest set pressure SG safety

Which one of the following is correct regarding RCS Tavg and atmospheric relief valves if air pressure to the atmospheric reliefs is adjusted to 29 psig?

A. Tavg will lower rapidly, the atmospheric reliefs are fully open

B. Tavg will lower slowly, the atmospheric reliefs are partially open

C. Tavg will remain constant, the atmospherics are closed

D. Tavg will remain constant, the atmospheric reliefs are open but not enough to overcome decay heat production

SOP-62.0

Caution prior to step 4.1:

CAUTION:	**Atmospheric reliefs will start to open at 29.6 psig and will be full open at 45 psig. Observe local air supply pressure gauge N2P18PI2872 AB (BB,CB). IF the atmospheric relief is full open, THEN Tech Spec cooldown limits may be exceeded.**

A. Incorrect; per caution the atmospheric will not start to open untill 29.6#, therfore it will be closed.
B. Incorrect; per caution the atmospheric will not start to open untill 29.6#, therfore it will be closed.
C. Correct
D. Incorrect; per caution the atmospheric will not start to open untill 29.6#, therfore it will be closed.

4.0 Instructions

CAUTION: Atmospheric reliefs will start to open at 24 ± 2 psig and will be full open at 45 psig. Observe local air supply pressure gauge N1P18PI2872AB (BB,CB). IF the atmospheric relief is full open, THEN Tech Spec cooldown limits may be exceeded.

NOTE: The compressors are rated at 41.6 Ft^3/min at 100 psig.

4.1 Placing the Emergency Air Compressors in Operation

4.1.1 Place emergency air compressor 1A hand switch in ON.

4.1.2 Place emergency air compressor 1B hand switch in ON.

4.1.3 With power available to MCB controllers PC 3371A (B,C) proceed to step 4.3. With no power available, proceed to step 4.4.

4.2 Removing the Emergency Air Compressors from Operation

4.2.1 Place emergency air compressor 1A hand switch in OFF.

4.2.2 Place emergency air compressor 1B hand switch in OFF.

4.3 Manual-Electric Operation of Steam Generator Atmospheric Relief Valves

4.3.1 Place the emergency air compressors in operation per step 4.1.

4.3.2 Open emergency air header isolation valve N1P18V073A, N1P18V073B and N1P18V073C.

4.3.3 Open emergency air header to normal air header cross connect valve N1P18V074A, N1P18V074B and N1P18V074C.

4.3.4 Operate steam generator atmospheric reliefs from the main control board using controllers PC 3371A (B,C).

4.3.5 With normal air supply available, remove the emergency air compressors from operation per step 4.2.

4.3.6 Close emergency air header to normal air header cross connect valve N1P18V074A, N1P18V074B and N1P18V074C.

4.3.7 Close emergency air header isolation valve N1P18V073A, N1P18V073B and N1P18V073C.

4.6 Removing the Breathing Air System from Operation

4.6.1 Close and lock Breathing Air inside CTMT isolation valve Q1P18V002 (105 El CTMT, behind elevator). (Key Z-278)

4.6.2 Close and lock Breathing Air outside CTMT isolation valve Q1P18V001 (100' El rad side, piping penetration room). (Key Z-231)

4.6.3 Close compressed breathing air bottle isolation valves.

4.6.4 Close and lock the Service Air to penetration rooms isolation valve N1P18V062 (in Main Steam Valve Room). (Key Z-218)

4.7 Supplying Emergency Air to TDAFW Pump Steam Supply Valves

4.7.1 Place the emergency air compressors in operation per Step 4.1.

4.7.2 Open N1P18V095A and N1P18V095B, emergency air supply to TDAFWP steam supply valves.

4.7.3 WHEN normal air supply available, THEN remove emergency air compressors from operation per step 4.2.

4.7.4 Close N1P18V095A and N1P18V095B, emergency air supply to TDAFWP steam supply valves.

4.8 Selection of Operating Mode for Emergency Air Compressors

NOTE: The preferred Mode of Operation for the Emergency Air Compressors is the Constant Speed Control Mode.

4.8.1 To select the Constant Speed Control mode of operation, screw the selector knob on the auxiliary valve fully out (see Figure 1). This will allow the compressor to run continuously and load or unload as governed by the auxiliary valve.

4.8.2 To select the Auto Start and Stop mode of operation, screw the selector knob on the auxiliary valve fully in (see Figure 1). This allows the compressor to start and stop as controlled by pressure switch PS-1A.

5.0 References

5.1 Drawings: D-175034, D-175035, D-175159
5.2 FSAR Chapter 10.3.8
5.3 FNP-1-ARP-3.2
5.4 FNP-1-RCP-112

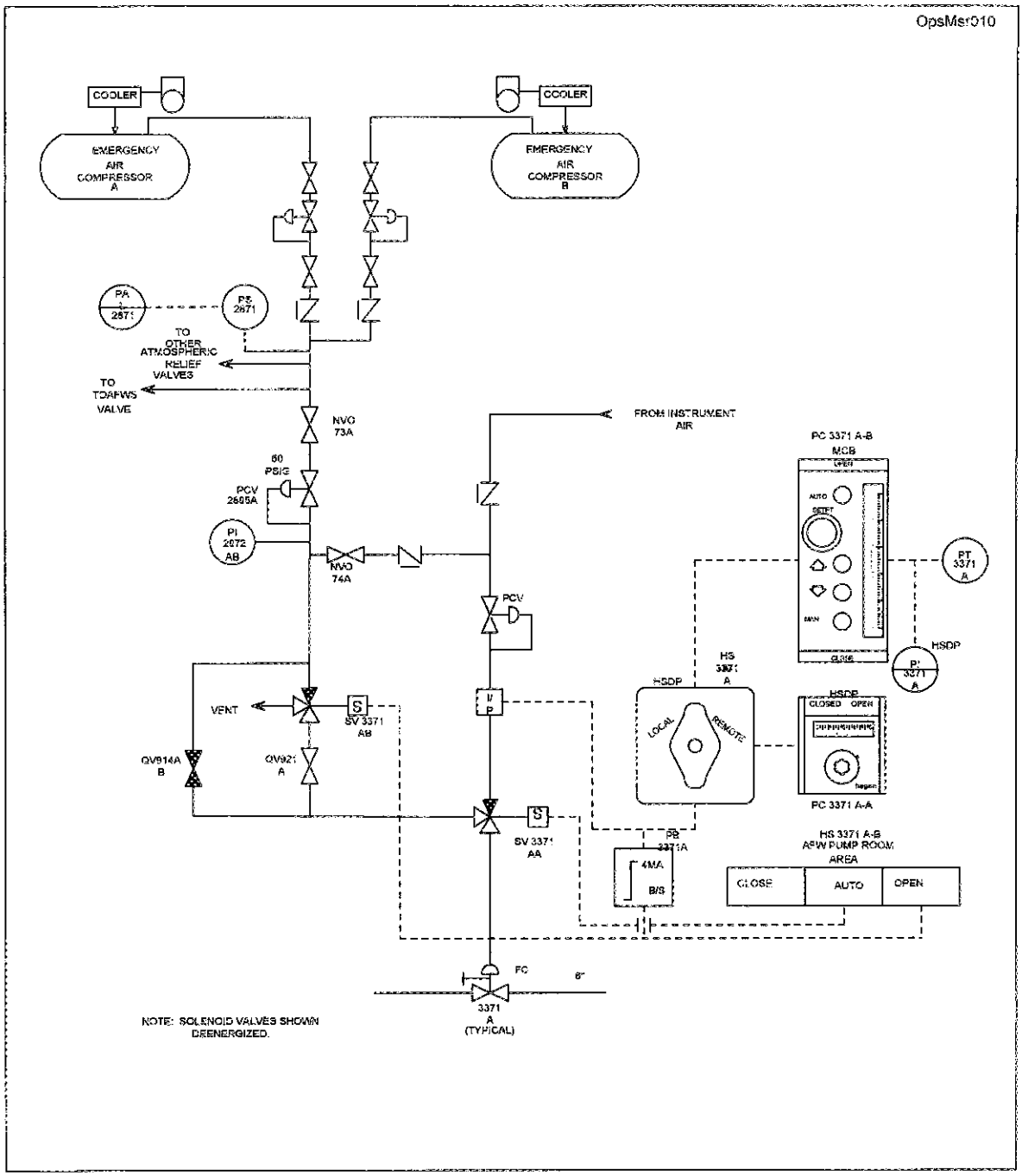

Air Supply to Main Steam Atmospheric Relief Valve
(Unit 2)

Figure 6b

4.0 Instructions

CAUTION: Atmospheric reliefs will start to open at 24 ± 2 psig and will be full open at 45 psig. Observe local air supply pressure gauge N2P18PI2872 AB (BB,CB). IF the atmospheric relief is full open, THEN Tech Spec cooldown limits may be exceeded.

NOTE: The compressors are rated at 41.6 Ft^3/min at 100 psig.

4.1 Placing the Emergency Air Compressors in Operation

4.1.1 Place emergency air compressor 2A hand switch in ON.

4.1.2 Place emergency air compressor 2B hand switch in ON.

4.2 Removing the Emergency Air Compressors from Operation

4.2.1 Place emergency air compressor 2A hand switch in OFF.

4.2.2 Place emergency air compressor 2B hand switch in OFF.

4.3 Manual-Electric Operation of Steam Generator Atmospheric Relief Valves

4.3.1 IF power is available to MCB controllers PC 3371A (B, C,), THEN proceed to step 4.3.2. IF power is NOT available to the MCB controllers, THEN proceed to section 4.4.

4.3.2 Place the emergency air compressors in operation per section 4.1.

4.3.3 Open emergency air header isolation valve N2P18V073A, N2P18V073B and N2P18V073C.

4.3.4 Open emergency air header to normal air header cross connect valve N2P18V074A, N2P18V074B and N2P18V074C.

4.3.5 Operate steam generator atmospheric reliefs from the main control board using controllers PC 3371A (B, C).

4.3.6 With normal air supply available, remove the emergency air compressors from service per section 4.2.

4.3.7 Close emergency air header to normal air header cross connect valve N2P18V074A, N2P18V074B and N2P18V074C.

4.3.8 Close emergency air header isolation valve N2P18V073A, N2P18V073B and N2P18V073C.

CAUTION: Watch for 100 psid on steam generators as steam is being bypassed to warmup the steam header.

CAUTION: IF a vacuum has been established in the main condenser, THEN the dangers of thermal stress and water hammer are more severe and extra caution should be used while warming the steam lines.

4.3.6 Slowly open warmup valve N2N11V019 while monitoring RCS temperature, pressure, and core flux level. IF the reactor is critical, THEN also monitor power level.

4.3.7 WHEN steam header pressure is within approximately 25 psig of SG pressure, THEN fully open warmup valve N2N11V019.

4.3.8 Verify that **ALL** steam lines have been drained per section 4.1.

NOTE:
- **It may be necessary to open the atmospheric relief valves in order to sufficiently reduce the ΔP across the MSIVs.**
- **IF Unit 2 is supplying gland sealing steam, air ejectors OR Unit 1, THEN consideration should be given to securing these steam loads so ΔP can be sufficiently reduced to open the MSIVs.**

4.3.8 Open 2A and 2B SG MSIV bypass valves while monitoring RCS temperature, pressure and core flux level. IF the reactor is critical, THEN also monitor power level.

4.3.9 WHEN steam header pressure AND individual steam generator pressures are approximately equal, THEN open the MSIVs.

4.3.10 WHEN the MSIVs reach the fully open position, THEN verify that the associated bypass valves automatically close.

4.3.11 WHEN desired,THEN unisolate main steam drain pot level control valves by performing the following:

- Open N2N11V905A 1A Main Turbine Inlet Steam Line Drain Pot LCV Isolation
- Open N2N11V905B 1B Main Turbine Inlet Steam Line Drain Pot LCV Isolation
- OpenN2N11V905C 1C Main Turbine Inlet Steam Line Drain Pot LCV Isolation

control center (MCC) A and B. The following discussion of emergency operation of the A atmospheric relief valve is typical for all three valves. See figure 6a for Unit 1 and 6b for Unit 2.

The normal means of relief valve operation would be prohibited if either SV-3371AA failed to energize or there was a failure of the I/P converter. In either case, operation of the atmospheric relief valve would be accomplished locally using handswitch (HS-3371AB). Placing HS-3371AB in the close position de-energizes SV-3371AA and AB. This closes the atmospheric relief valve by venting air from the valve actuator through SV-3371AA and AB to the atmosphere. When HS-3371AB is placed in the OPEN position, SV-3371AA is de-energized, and SV-3371AB is energized. This allows air from the emergency air compressors to be directed through SV-3371 AB and AA to fully open PV-3371A. On Unit 1, if train A electrical power is lost, SV-3371AB may be placed in the energized position by use of the manual operator. With SV-3371AB in the energized position, the atmospheric relief can be modulated by throttling NV073A to control actuator pressurization and NV098A to control venting. On Unit 2, if Train A electrical power is lost, SV-3371AB must be isolated using QV921A and bypassed using QV914AB. Then the atmospheric relief can be modulated by throttling NV073A to control actuator pressurization. QV921A must be used to control venting. For both units, a local pressure indicator (PI-2872 AB), mounted in the vicinity of NV073A, indicates actuator pressure. Atmospheric relief starts opening at 24 +/-2 psig and is fully open at 45 psig. If no air supply is available, the atmospheric relief valve (PV-3371A) may be opened by use of the local operator on the relief valve. Local operation of the atmospheric relief valve requires access to the main steam and feedwater valve room. The operator can determine if the atmospheric relief is in manual at the HSD panel, or the AFW area handswitch is in other than "auto" by looking at the MCB annunciators. Annunciator JA5 comes in if the atmospheric is in local at the HSD panel, or the AFW area handswitch is out of "auto."

The operator can determine if instrument air is available by looking at the instrument air pressure indication on the MCB or the "ATM. Relief Air Pressure Low" annunciator on the balance of plant (BOP) (PG2).

The main steam atmospheric relief valves have four different locations from which their position can be controlled. The following is a list of these locations and the valve position indication that is available at each location.

II. The following are symptoms of a reactor trip:

a. Any reactor trip annunciator lit.

b. Rapid decrease in neutron level indicated by nuclear instrumentation.

c. All shutdown and control rods are fully inserted. Rod bottom lights are lit.

III. The following are symptoms that require safety injection, if one has not occurred:

SI Signal	Instrumentation (TSLB)	Setpoint	Coincidence
1. Pressurizer pressure low (If not blocked)	PI-455,456,457 (TSLB2 17-1,17-2,17-3)	1850 psig	2/3
2. Steam Line Differential pressure	PI-474,484,494, PI-475,485,495, PI-476,486,496 (TSLB4 10-2,10-3,10-4, 11-2,11-3,11-4, 12-2,12-3,12-4, 13-2,13-3,13-4, 14-2,14-3,14-4, 15-2,15-3,15-4)	100 psid	1 steam line 100 psig less than other two on 2/3 protection sets
3. Low Steam Line pressure (If not blocked)	PI-474,485,496 (TSLB4 19-2,19-3,19-4)	585 psig (rate compensated)	2/3
4. Containment pressure high	PI-951,952,953 (TSLB1 1-2,1-3,1-4)	4 psig	2/3
5. Manual	N/A	N/A	1/2

IV. The following are symptoms of a safety injection:

a. Any SI annunciator lit.

b. BYP & PERMISSIVE SAFETY INJECTION ACTUATED status light lit

c. MLB-1 1-1 or MLB-1 11-1 lit

d. HHSI flow greater than 0 gpm.

..035.K6.02 | 12/18/1997

Kewaunee 1 | Exam Level R

Mark Question | Print Recor | New Sear

Question

The following conditions exist:

- Plant is operating at 100% power

Which ONE (1) of the following will result if BOTH Main Steam Isolation Valves suddenly close?

Answer: Secondary PORVs will fully open and at least one S/G Safety Valve will open to prevent S/G over pressure

Distracter 1 Secondary PORVs will remain shut and S/G Safety Valves will open to prevent S/G over pressure

Distracter 2 Secondary PORVs will modulate open and prevent Steam Generator pressure from getting high enough to ope

Distracter 3 Secondary PORVs will modulate open and one S/G Safety Valve may open to assist in preventing S/G over pressure

Distracter Analysis:

Answer:

Distracter 1:

Distracter 2:

Distracter 3:

c Exit

n the S/G Safety Valves

36. 036AK1.01 001/1/2/AOP-30/C/A 3.5/4.1/MOD/FA011005/RO/

Both units are in MODE 1 and Unit 1 is conducting a fuel shuffle in the SFP when the following occurs:

- EH2, SFP LVL HI-LO, annunciator comes into alarm.
- R-5, SFP Area Radiation Monitor, comes into alarm and reads 10 R/HR.
- FH5, SFP AREA RE25 A OR B HI RAD, annunciator comes into alarm.
- R-25A & B, SFP Ventilation Radiation Monitor, reads off scale high.

All automatic actions have taken place as expected. AOP-30, REFUELING ACCIDENT, is entered. Which one of the following is the correct action for the conditions stated?

A. Immediately commence filling the SFP and monitor the SFP level.

B. Have HP verify the R-5 alarm is valid and the extent of damage to the fuel.

C. Place a second control room air conditioning unit on service and place the control room exhaust fans in service.

D. Dispatch personnel to close ALL SFP hatches and doors and evacuate the SFP area.

A. Incorrect - filling the SFP may need to be done, however with the indications given, sending a person into this area would require a special RWP and prejob brief as well as HP coverage and dose extensions. Monitoring the SFP level would have to be done locally and would require an individual to recieve a high dose rate.

B. Incorrect - This is not required by procedure and would not be done until the reason for the above alarms have come in. Also due to the number of supporting alarms, this would not be prudent judgement to send HP in to an area of such high dose rates without more investigation.

C. Incorrect - Placing the CREFS in service is required per step 2 but placing a control room AC and exhaust fan is not required.
The note below is in part from FNP-0-SOP-56.0
The Control Room Exhaust System should not be operated with either Unit in Modes 1 through 4 except in the case of smoke or toxic gas in the Control Room. Operation of this system will require that there be no movement of irradiated fuel or loads over irradiated fuel.

D. Correct - **Dispatch personnel to close ALL SFP hatches and doors and evacuate the SFP area.**
AOP-30 has the crew evacuate the affected area. ARP FH5 also has the area evacuated and HP notified and the area surveyed prior to access being allowed. Closing the doors and hatches is also accomplished per AOP-30.0.

036AK1.01 Fuel Handling Incidents - Knowledge of the operational implications of the following concepts as they apply to Fuel Handling Incidents: Radiation exposure hazards

Evaluate plant conditions to determine if entry into AOP-30.0 is required (OPS52521H02).

State the basis for all cautions, notes, and actions associated with AOP-30.0 (OPS52521H03).

Describe the sequence of major actions associated with AOP-30.0 (OPS52521H04).

modified from AOP-30.0-52521H04 #2 and Summer 1 2002 exam

Original question

QUESTIONS REPORT

for 036ak1.01 Questions

AOP-30.0-52521H04 002/HLT/LOCT/RO/C/A (LEVEL 2/3) PROC/APE036AK1.01///LOCT/

Both units are in MODE 1 when high radiation alarms occur on R-5, Spent Fuel Pool Area Radiation Monitor, and R-25A & B, Spent Fuel Pool Atmosphere Radioactive Gas Monitor. The Unit 1 fuel building HVAC isolates, and penetration room filtration actuation occurs during the movement of irradiated fuel in the SFP. The operator observes no bubbles from the pool and pool level is not lowering. Procedure AOP-30, "REFUELING ACCIDENT," is entered.

Which ONE of the following is the correct action for the conditions stated?

A. Evacuate the Spent Fuel Pool area.

B. Immediately close the fuel transfer tube gate valve and Secure Unit 1 containment purge if in progress.

C. Enter AOP-36.0 , "Loss of Spent Fuel Pool Cooling ."

D. Have HP verify the R-5 alarm is valid and the extent of damage to the fuel.

A. Correct - since the level is NOT lowering, there are no actions to be taken since this is a SFP area problem. AOP-30 has the crew evacuate the affected area.
B. Incorrect - there are items to check prior to closong the gate valve and since level is not lowering, this is not a required action. Personnel safety is more important at this point. Ctmt purge isolation is required for ctmt rad alarms.
C. Incorrect - AOP-36 is not entered for these conditions.
D. Incorrect - This is not required by procedure.

OPERATIONS

Procedure Step Description

This section contains a step-by-step description of the actions required to be performed per AOP-30.0.

AOP-30.0, Symptoms

AOP-30.0 is entered when a fuel handling accident causes damage to fuel with high radiation on R-2, R-5, R-11, R-12, R-24A, R24B, R-25A, or R-25B or due to a rapidly falling refueling cavity level.

Communication between the SRO in charge of refueling and the control room is essential to evaluate that this symptom of a refueling accident exists inside CTMT. Radiation monitor R-2 provides local indication in CTMT, along with an audible alarm; however, due to its location with respect to refueling operations, it may not be obvious to those involved in refueling. In the SFP, radiation monitor R-5 provides local indication and will sound a local alarm if the alarm setpoint is reached. The alarm and indication for R-5 is in close enough proximity to the refueling operations taking place in the SFP that this symptom should be readily identified. All radiation monitors listed for use in evaluating this symptom provide indication and annunciation in the control room or provide local indication (R-25A[B], R-24A[B], R-11, R-12) with annunciation in the control room and locally away from refueling operations. The operator needs to be aware that R-11 and R-12 may be isolated or not in operation during fuel handling.

A rapid drop in the refueling cavity level during refueling is also a symptom of a refueling accident. Even though the mechanisms through which gross leakage could occur have been evaluated to pose only a minimal threat, the potential does exist and needs to be addressed. An assessment of the rate of cavity level decrease must be made and must be evaluated as to whether or not the decrease is rapid. Any notable decrease in level should be suspect and actions should be initiated to correct the leakage.

LOCATION FH5

SETPOINT: Variable, as per FNP-1-RCP-252

ORIGIN: Radiation Monitor Cabinet Channels R-25A or R-25B, Spent Fuel Pool Vent

H5
SFP AREA
RE25 A OR B
HI RAD

PROBABLE CAUSE

1. High Radiation Level in the discharged air from the Spent Fuel Pool Area Ventilation Fans.
2. The radiation monitors fail to a "High Radiation" condition on loss of instrument and/or control power that will result in actuation of associated automatic functions.

AUTOMATIC ACTION

NOTE: The unaffected train penetration room filtration system may also start, due to low ΔP in the spent fuel pool.

Trips the Fuel Handling Area Supply and Exhaust Fans, closes the Fuel Handling Area Supply and Exhaust Dampers AND starts the Penetration Room 1A OR 1B Filtration Units.

IMMEDIATE ACTION

NONE

SUPPLEMENTARY ACTION

1. Determine which radiation monitor indicates high activity.
2. Verify that any required automatic actions have occurred.
3. Announce receipt of the alarm and the affected area on the public address system.
4. Have all personnel evacuate the affected area.
5. Implement FNP-0-EIP-9, EMERGENCY CLASSIFICATION AND ACTIONS.
6. Determine the validity of the high activity indication as follows:
   6.1 Verify that the instrument is aligned for normal operation and is functioning properly.
   6.2 Sample or survey the affected system or area as required.

LOCATION FH5

SUPPLEMENTARY ACTION

7. Determine the source or cause of the high activity and correct or isolate as required.
8. DO NOT allow personnel to enter the affected area without the approval of the Health Physics Department.
9. IF high activity indication is due to instrument failure, THEN refer to Technical Specifications, section 3.3.8.

{CMT 0008659} applies to entire annunciator.

References: A-177100, Sh. 310; U-258400; D-181658; D-181671; D-177394 Sh. 1 & 2; FSAR, Section 11.4; D-175045

LOCATION EH2

H2
SFP LVL HI-LO

SETPOINT: 1. High: 153'10"
2. Low: 153'4"

ORIGIN: Level Switch (N1G31LS651-N)

PROBABLE CAUSE

1. High Level
   a) Improper valve alignment
   b) Leakage into Spent Fuel Pit (SFP) from other systems
2. Low Level
   a) Normal evaporation
   b) Improper valve alignment

AUTOMATIC ACTION

NONE

IMMEDIATE ACTION

1. DISPATCH OPERATOR TO DETERMINE ACTUAL LEVEL FROM THE LOCAL INDICATOR.
2. IF LEVEL IS LOW, THEN MAKEUP TO THE SPENT FUEL PIT IN ACCORDANCE WITH FNP-1-SOP-54.0, SPENT FUEL PIT COOLING AND PURIFICATION SYSTEM.

SUPPLEMENTARY ACTION

CAUTION: SFP pump suction vortexing may occur below 153' 4" level. (NEL-98-0329)

1. IF level is low AND evaporation is NOT suspected to be the cause of the low level alarm, THEN perform the following:
   a. Check the WHT, FDT, RHTs and RWST for abnormal level increases to determine possible leakage flowpaths.
   b. Check for leakage past the weir gate into the Fuel Transfer Canal or Cask Wash Area.
   c. Check for leakage into CTMT by checking Refueling Cavity level (if accessible) and CTMT Waste Sump Level.
   d. Perform a SFP liner leak check in accordance with FNP-1-SOP-54.0, SPENT FUEL PIT COOLING AND PURIFICATION SYSTEM.
   e. Refer to Technical Specifications LCO 3.7.13.
2. IF level is high, THEN perform the following:
   a. Check for any signs of obvious in-leakage to the SFP at the SFP area (e.g. fire protection, demineralized water).
   b. Check for other sources of in-leakage to the SFP, if necessary (e.g. Component Cooling Water System, Reactor Makeup Water via the SFP demineralizer).
   c. Terminate source of in-leakage.
   d. Contact Chemistry to obtain current SFP boron concentration.
   e. IF boron concentration determined to be <2000 ppm, THEN suspend any movement of fuel assemblies in the storage pool and initiate action to restore the SFP boron concentration to ≥2000 ppm. (Ref. Technical Specifications LCO 3.7.14)
3. Verify proper system valve alignment.
4. Return the Spent Fuel Pit Level to normal.

References: A-177100, Sh. 267; D-175043; OCR-383; CN-BC2200; Technical Specifications

UNIT 1

FARLEY NUCLEAR PLANT

ABNORMAL OPERATING PROCEDURE

FNP-1-AOP-30.0

REFUELING ACCIDENT

PROCEDURE USAGE REQUIREMENTS per FNP-0-AP-6	SECTIONS
Continuous Use	
Reference Use	ALL
Information Use	

SAFETY RELATED

Approved:

TODD YOUNGBLOOD

Operations Manager

Date Issued: 10/08/2003

TABLE OF CONTENTS

Procedure Contains	Number of Pages
Body	8
Attachment 1	2

A. Purpose

This procedure provides actions for response to fuel handling accident or a loss of refueling cavity water level.

This procedure is applicable at all times.

B. Symptoms or Entry Conditions

I. This procedure is entered when a fuel handling accident causes damage to a fuel assembly in conjunction with high radiation indication on any of the following:

a. R-2 CTMT 155 ft

b. R-5 SFP ROOM

c. R-11 CTMT PARTICULATE

d. R-12 CTMT GAS

e. R-24A(B) CTMT PURGE

f. R-25A(B) SPENT FUEL BLDG EXH

II. This procedure is entered when rapidly falling refueling cavity level is observed.

Step	Action/Expected Response	Response NOT Obtained

NOTE:
- A high alarm from R-25A or B will automatically isolate fuel building HVAC and start penetration room filtration.
- The SRO in charge of fuel handling shall have sole responsibility for evaluating placement of fuel in step 1.
- The SRO in charge of fuel handling shall have sole responsibility for evacuation of the refueling crew.

1 Secure all Fuel Handling operations:

1.1 If fuel movement in progress and conditions permit, <u>THEN</u> place fuel assembly in a safe location.

- Return fuel assembly to assigned location in the core.

<u>OR</u>

- Place fuel assembly in upender with manipulator crane gripper disengaged and raised to the GRIPPER UP DISENGAGED position.

<u>OR</u>

- Place fuel assembly in the spent fuel rack.

1.2 Verify CTMT and spent fuel room upenders - LOWERED.

1.3 Verify CONVEYER CONTROL switch in ON at CONTAINMENT BUILDING panel.

1.4 Verify CARRIAGE AT PIT lamp is ON. (155 ft, AUX BLDG spent fuel room control panel)

Step 1 continued on next page.

___Page Completed

Step	Action/Expected Response	Response NOT Obtained
	1.5 Close fuel transfer tube gate valve. (155 ft, AUX BLDG spent fuel room)	
	1.6 Dispatch personnel to close all spent fuel area fuel handling hatches.	
___ 2	While continuing with the remainder of this procedure, perform ATTACHMENT 1 to ensure control room isolation with CREFS placed in service.	

****

CAUTION: Dangerously high dose rates will result from uncovering reactor internals.

****

___ 3 IF reactor internals are removed, or are being removed from the vessel, THEN place them in a safe location as follows.

- IF this procedure was entered due to rapidly falling refueling cavity level, AND normal cavity level has been temporarily restored, THEN return internals to the vessel if time permits.

OR

- IF level is falling, THEN place internals back in the vessel, or at the lowest point in the refueling cavity.

___Page Completed

Step	Action/Expected Response	Response NOT Obtained

****

CAUTION: Rapidly falling refueling cavity level will affect the containment and the spent fuel room.

****

___ 4 Evacuate all non-essential personnel from accident area.

___ 5 Verify all access doors to accident area - CLOSED.

___ 6 Evaluate actuating the plant emergency alarm.

NOTE: Step 7 is a Continuing Action step.

---

7 IF fuel damage has resulted in elevated containment radiation levels,
THEN perform the following.

7.1 Verify containment ventilation isolation.

7.1.1 Verify containment purge dampers - CLOSED

[] 3197
[] 3198D
[] 3198C
[] 3196
[] 3198A
[] 3198B

Step 7 continued on next page.

___Page Completed

Step	Action/Expected Response	Response NOT Obtained
	7.1.2 Verify containment mini purge dampers - CLOSED. CTMT PURGE DMPRS MINI-2866C & 2867C FULL-3198A & 3198D [] 2866C [] 2867C CTMT PURGE DMPRS MINI-2866D & 2867D FULL-3196 & 3197 BOTH-3198B & 3198C [] 2866D [] 2867D	
	7.1.3 Stop MINI PURGE SUPP/EXH FAN.	
	7.1.4 Stop or verify stopped CTMT PURGE SUPP/EXH FANs	

NOTE: Step 8 is a Continuing Action step.

___	8	IF SFP Ventilation tripped OR SFP EXH FAN SUCT DMPR HV3990A(B) closed, THEN perform the following.	
		8.1 Verify PRF exhaust fan A(B) running.	
		8.2 Verify PRF recirculation fan A(B) running.	
		8.3 Verify SFP to PRF FLTR UNIT 3538A(B) open.	
___	9	Check Refueling Cavity Level - STABLE.	9 Proceed to step 17.

Page Completed

Step	Action/Expected Response	Response NOT Obtained
___10	Monitor affected area radiation. • Monitor containment radiation. [] R-2 CTMT 155 FT [] R-11 CTMT PARTICULATE [] R-12 CTMT GAS [] R-24A CTMT PURGE [] R-24B CTMT PURGE OR • Monitor spent fuel room radiation. [] R-5 SPENT FUEL ROOM [] R-25A SPENT FUEL BLDG EXH [] R-25B SPENT FUEL BLDG EXH	
___11	Evaluate event classification and notification requirements using FNP-0-EIP-9, EMERGENCY CLASSIFICATION AND ACTIONS AND FNP-0-EIP-8, NON-EMERGENCY NOTIFICATION.	

NOTE: Entry into a previously evacuated area should be made using FNP-0-EIP-14, PERSONNEL MOVEMENT, RELOCATION, RE-ENTRY AND SITE EVACUATION.

___12	Evaluate the need for Chemistry to sample refueling cavity and spent fuel pool for activity.	
___13	Evaluate the need for Chemistry to sample the spent fuel pool and reactor cavity for boron concentration.	
___14	Evaluate placing spent fuel pool purification system in service using FNP-1-SOP-54.0, SPENT FUEL PIT COOLING AND PURIFICATION SYSTEM.	

___Page Completed

Step	Action/Expected Response	Response NOT Obtained
___15	Consult Operations Manager to evaluate futher plant response.	
___16	Go to procedure and step in effect.	

NOTE: Efforts to determine source of inventory loss should be performed in parallel with makeup efforts below. Possible sources of inventory loss include damaged nozzle dams, reactor cavity seal or spent fuel pool liner, or RHR system malfunctions. Refer to FNP-1-AOP-12.0, RESIDUAL HEAT REMOVAL SYSTEM MALFUNCTION for response to RHR malfunctions.

___17	Place CTMT SUMP PUMPs Q1G21P019A and Q1G21P019B in PULL-TO-LOCK. (BOP)	
___18	Align RHR system.	
18.1	Verify only one RHR PUMP - STARTED IN COOLDOWN ALIGNMENT.	
18.2	Monitor running RHR pump for evidence of cavitation.	
18.3	Align remaining RHR pump to fill refueling cavity from RWST using FNP-1-SOP-7.0, RESIDUAL HEAT REMOVAL SYSTEM.	18.3 Align one charging pump or the refueling water purification pump to fill the refueling cavity.
___19	Check RWST level - GREATER THAN 3 ft.	19 Consult Operations Manager to evaluate method for RWST makeup.
___20	Evaluate the need for Chemistry to sample the spent fuel pool and reactor cavity for boron concentration.	
___21	Evaluate event classification and notification requirements using FNP-0-EIP-9, EMERGENCY CLASSIFICATION AND ACTIONS AND FNP-0-EIP-8, NON-EMERGENCY NOTIFICATION.	

___Page Completed

Step	Action/Expected Response	Response NOT Obtained
___22	Consult Operations Manager to evaluate further plant response.	
___23	Go to procedure and step in effect.	

-END-

ATTACHMENT 1

****

CAUTION: This Attachment should be completed without delay to ensure continued control room habitability.

****

NOTE: A control room isolation should occur and the TSC HVAC System should shift to its emergency (recirculation) mode upon receipt of a high radiation alarm from R-35A or R-35B.

1 Ensure a control room is isolated by closing or verifying closed the following dampers:

1.1 CONTROL RM UTILITY EXH

[] HV-3628
[] HV-3629

1.2 COMPUTER RM HVAC SUPP

[] HV-3626
[] HV-3627

1.3 COMPUTER RM HVAC RTN

[] HV-3622
[] HV-3623

1.4 CONTROL RM HVAC SUPP

[] HV-3624
[] HV-3625

1.5 CONT RM EXH FAN INLET DMPR

[] HV-3649A
[] HV-3649B
[] HV-3649C

ATTACHMENT 1

NOTE: Steps 2 and 3 place the Control Room Emergency Filtration/Pressurization System (CREFS) in service.

2 Place one of the redundant Control Room Pressurization Units inservice per FNP-0-SOP-56.0, CONTROL ROOM HVAC SYSTEM.

3 Place one of the redundant Control Room Recirculation Units inservice per FNP-0-SOP-56.0, CONTROL ROOM HVAC SYSTEM.

4 Stop or verify stopped the Control Room Utility Exhaust Fan.

5 Ensure the TSC HVAC System is placed into its emergency (recirculation) mode of operation per FNP-0-SOP-56.1, TECHNICAL SUPPORT SYSTEM HVAC SYSTEM.

-END-

37. 038EK1.03 001/1/1/SGTR/C/A 3.9/4.2/NEW/FA011005/RO/

Given the following:

- A SG tube rupture has occurred on Unit 1.
- EEP-3, Steam Generator Tube Rupture, has been entered.
- ALL RCPs have been tripped.

Which one of the following could be a result of the step, "Reduce RCS pressure using pressurizer PORV to minimize break flow and refill pressurizer" per EEP-3?

A. A rapid rise in core delta T as natural circulation flow is interrupted.

B. A rapid rise in pressurizer level due to reactor vessel steam voiding.

C. A rapid drop in the cold leg temperature due to the loop being stagnant during the pressure reduction.

D. A rapid rise in containment pressure due to overpressurization of the PRT and subsequent rupture disc failure.

EEP-3
A. Incorrect - The core delta T will not be affected by the pressure reduction and will be aided due to the cooldown done before this.

B. Correct - **A rapid rise in pressurizer level due to reactor vessel steam voiding.** This is a caution prior to step 19 of EEP-3.0.

C. Incorrect - The RCS CL temperature may rapidly decrease due to the SI flow going into the stagnant loop cold leg. EEP-3 lesson plan, page 9

C. Incorrect - If the PRT would rupture due to the use of the PORVs, which is highly unlikely, Ctmt pressure would not rise rapidly. It would be a very small rise in pressure, humidity and temperature.

038EK1.03 SGTR - Knowledge of the operational implications of the following concepts as they apply to SGTR: Natural Circulation

State the basis for all cautions, notes, and actions associated with EEP-3 (OPS52530D03)

Describe the sequence of major actions associated with EEP-3. (OPS52530D04)

Step	Action/Expected Response	Response NOT Obtained
___17	**Check SUB COOLED MARGIN MONITOR indication - GREATER THAN 36°F(65°F) SUBCOOLED IN CETC MODE.**	17 Go to FNP-1-ECP-3.1, SGTR WITH LOSS OF REACTOR COOLANT SUBCOOLED RECOVERY DESIRED.

NOTE: Pressurizer heaters may automatically reenergize when pressurizer level exceeds 15%.

18 Reduce RCS pressure to minimize break flow and refill pressurizer.

NOTE: Normal pressurizer spray may become ineffective during pressure reduction. This situation justifies using a PRZR PORV per step 19.

18.1 <u>IF</u> normal pressurizer spray available, <u>THEN</u> open all available normal pressurizer spray valves. 1A(1B) LOOP SPRAY VLV [] PK 444C [] PK 444D	18.1 Proceed to Step 19. OBSERVE CAUTIONS PRIOR TO STEP 19.

Step 18 continued on next page.

Step	Action/Expected Response	Response NOT Obtained

****

CAUTION: To prevent pressurizer PORV failure, cycling of pressurizer PORVs should be minimized.

****

****

CAUTION: The PRT may rupture causing abnormal containment conditions while using pressurizer PORVs.

****

****

CAUTION: Reactor vessel steam voiding may occur during pressure reduction while on natural circulation. This will cause a rapid rise in pressurizer level.

****

NOTE: Pressurizer heaters may automatically reenergize when pressurizer level exceeds 15%.

19 **Reduce RCS pressure using pressurizer PORV to minimize break flow and refill pressurizer.**

NOTE: Any pressurizer PORV previously isolated due to excessive seat leakage only, may be unisolated if needed to make an RCS pressure reduction. The leaking PORV must be re-isolated once the desired pressure is reached.

19.1	Check pressurizer PORV - AT LEAST ONE AVAILABLE	19.1	IF no equipment available for RCS pressure reduction, THEN go to FNP-1-ECP-3.3, SGTR WITHOUT PRESSURIZER PRESSURE CONTROL.

Step 19 continued on next page.

Page Completed

As shown in Figure 16, RCS temperature, pressurizer level, and affected steam generator levels will stabilize (Figure 17), and no further uncontrolled releases of radiological effluent from the ruptured steam generator will occur. Note that although the level in the affected steam generator may reach the top of the narrow range span, significant volume still exists before the steam generator fills with water. The team's primary goal now becomes one of maintaining RCS pressure equal to ruptured steam generator pressure, therefore keeping break flow stopped.

SGTR Transient: Off-Site Power Unavailable

The principal systems/components affected by loss of off-site power are the steam removal systems, RCS, and RCS pressure control. The effect of each of these on the system response and recovery is discussed below. A typical sequence of events without off-site power available is also presented in Table 1.

The steam dump system and/or atmospheric relief valves are designed to actuate following loss of load or reactor trip to limit the increase in secondary side pressure. Without off-site power available, the steam dump valves, which bypass the turbine to the condenser, will remain closed as will the atmospheric relief valves due to loss of instrument air. Energy transferred from the primary will rapidly increase steam generator pressures after the reactor trip until the steam generator safety valves lift to dissipate this energy, as shown in Figure 18. Because the secondary side temperature increase is greater, sensible energy transfer from the primary side following reactor trip is reduced. Consequently, RCS pressure decreases more slowly (see Figure 19), and SI actuation and all attendant automatic actions are delayed.

RCPs trip on a loss of off-site power, and a gradual transition to natural circulation flow ensues. The cold leg temperature trends toward the steam generator temperature as the fluid residence time in the tube region increases. Initially, the core ΔT decreases as core power decays following reactor trip and, subsequently, increases as natural circulation flow develops (Figures 20 and 21). Without RCPs running, the upper head region becomes inactive, and the fluid temperature in that region will significantly lag the temperature in the active RCS regions. This creates a situation more prone to voiding during the subsequent cooldown and depressurization.

Sufficient instrumentation and controls are provided to ensure that necessary recovery actions can be completed without off-site power available. Although the recovery method is the

same with or without off-site power available, the equipment used may be different. The RCS is cooled using the steam generator atmospheric relief valves on the intact steam generators because neither the steam dump valves nor the condenser would be available without off-site power. Even with one steam generator out of service, these valves provide sufficient capacity to complete the initial RCS cooldown rapidly, as shown in Figure 22. Note that the hot leg temperature does not respond as quickly as the cold leg and steam generator temperatures since RCPs are not running.

Under natural circulation conditions, subsequent actions to isolate the affected steam generators and to cool down the intact RCS loops may stagnate the affected loop. Consequently, the hot leg fluid in that loop may remain warmer than in the unaffected loops. Similarly, SI flow into the stagnant loop cold leg may rapidly decrease the fluid temperature in the cold leg, downcomer, and pump suction regions significantly below the rest of the RCS, as observed during the tube failure event at R. E. Ginna (Figure 23). Although the Ginna plant is a low pressure SI plant, a similar response would occur for a high pressure SI plant like Farley Nuclear Plant.

With RCPs stopped, normal pressurizer spray would not be available. Consequently, initial RCS pressure reduction must be performed using pressurizer PORVs. Although a PORV enables more rapid RCS depressurization (Figure 24), it also results in an additional loss of reactor coolant, which may rupture the pressurizer relief tank (PRT) and contaminate containment. Auxiliary spray conserves reactor coolant but may create excessive thermal stresses in the spray nozzle, which could result in nozzle failure. Consequently, this method is not used during the initial pressure reduction if normal spray is not available. After letdown is established then auxiliary spray is the preferred alternative to the normal spray valves for controlling and maintaining RCS pressure to minimize leakage.

Because the upper head region is inactive, voiding may occur in this region during RCS depressurization. This will result in a rapidly increasing pressurizer level indication as water displaced from the upper head replaces steam released or condensed from the pressurizer. This behavior was observed during the Ginna tube failure event, as shown in Figure 25, when a pressurizer PORV failed to close. The extent of voiding is limited to the inactive regions of the RCS provided subcooling is maintained at the core exit. However, flashing in the inactive regions may slow further RCS depressurization to cold shutdown conditions.

maintaining subcooling criteria) in order to limit leakage and potential overfilling of the steam generator.

SI Termination and Overfill

Continued operation with SI flow in progress after SI termination criteria have been met could result in serious problems. These include opening of steam generator relief and safety valves, in overfilling the steam generator, in flooding the steam lines, and in pressurized thermal shock of the reactor vessel. Proper use of the EEP-3 series procedures should preclude these problems. Additional procedural guidance is provided in many yellow path Function Restoration Procedures (FRPs). FRP-H.2, Response to Steam Generator Overpressure, provides guidance to preclude steam generator relief or safety valve operation due to steam generator high pressure. FRP-H.3, Response to Steam Generator High Level, provides guidance in the event of steam generator overfill. FRP-P.2, Response to Anticipated Pressurized Thermal Shock Condition, provides guidance should conditions that might lead to pressurized thermal shock occur. FRP-I.1, Response to High Pressurizer Level, aids the team in coping with high pressurizer level once SI has been terminated.

RCS Voiding

Void formation in the reactor vessel upper head is possible during SGTR events, especially if RCPs have been stopped. Voiding does not pose a safety concern as long as subcooling is restored, and natural circulation flow is maintained. Cooling and collapse of voided areas can be accomplished most effectively by restart of an RCP pump through guidance in the EEP-3 series procedures or within FRP-I.3, Response to Voids in Reactor Vessel.

Ruptured Steam Generator Cooldown Methods

ESP-3.1, Post-SGTR Cooldown Using Backfill, is the preferred method because it minimizes radiological releases and facilitates the processing of contaminated primary coolant. Because the secondary side water might have adverse effects on the primary system components and cause boron dilution, its chemistry should be considered before initiating backflow. The backfill method may require repeated draining of the affected steam generators through small capacity lines, and will proceed slowly. If no RCP is running, the water in the steam generator

LOCA. If a pressurizer PORV is opened to decrease RCS pressure, steam will be discharged into the PRT. Depending on RCS pressure, this discharge may be sufficient to break the PRT rupture disk before primary pressure is reduced to the ruptured steam generator pressure. If that occurs, leakage of contaminated coolant into containment may result in abnormal containment radiation and humidity. Since these symptoms are also characteristic of a LOCA, this caution is provided to alert the operator that the more likely source in this case is the PRT. The operator should continue recovery in this procedure to stop primary-to-seconday leakage unless otherwise directed by subsequent steps.

Without RCPs running, there is very little flow into the upper head region. Fluid in that region remains relatively hot, even though the fluid temperature in the active regions of the primary system has been significantly reduced. As the RCS is depressurized, this hotter fluid may flash to steam, forming an upper head void. Similar behavior may occur in the steam generator tube region of the ruptured loop, although the fluid temperature in the tubes is expected to follow the temperature in the active regions more closely. Pressurizer level will increase rapidly as water displaced from these hotter regions replaces steam vented through the PORV. The pressurizer may fill within a few minutes, resulting in water relief through the PORV unless the PORV is closed. This note informs the operator of this condition so that the PORV can be closed quickly, as directed in the following step.

Although voiding may occur in the inactive regions of the RCS, it is not expected to occur when the primary pressure is initially reduced to equilibrium with the ruptured steam generator even if no RCPs are running. It would be expected if the ruptured steam generator pressure is significantly below no-load or significant overshoot occurs during RCS depressurization.

As RCS pressure falls and pressurizer level is rising, the spray valves begin to lose their ability to lower pressure. If this rate of pressure reduction is such that the steam generator will overfill or the pressurizer high level termination condition will be reached, the operator should use the PORV to facilitate RCS pressure drop. A note provides the guidance to use the RNO. If a PORV is used, there is a note to remind the operator that it may have been previously isolated due to seat leakage and should be re-isolated at the desired pressure.

Normal spray is the preferred method of depressurization. If normal spray is unavailable, then transition to RNO should be made. Normal spray may not be available for a number of

reasons. This could range from not having either A or B RCP in operation and, therefore, no differential pressure to provide the flow, or the spray valves themselves may not be operable; it is up to the operator to make the determination.

If normal pressurizer spray is either unavailable or ineffective, an alternative means must be used. This means is use of the pressurizer PORVs. Although auxiliary spray would conserve reactor coolant inventory, it may also lead to failure of the spray nozzle since the spray would not be heated by letdown at this time. In addition, it is unlikely that sufficient pressure differential will exist across the auxiliary spray line with the SI lines open to deliver adequate auxiliary spray. Consequently, a pressurizer PORV is the recommended alternative to normal pressurizer spray.. To further ensure recovery in the event that no pressurizer pressure control is available, the operator is directed to guideline ECP-3.3, which provides for restarting RCPs to restore normal spray, SI reduction to establish auxiliary spray, and SI termination without pressurizer level to stop primary-to-secondary leakage.

The use of a pressurizer PORV to depressurize the RCS results in an additional loss of reactor coolant. Consequently, if a pressurizer PORV is used to depressurize the RCS, additional guidance is provided to ensure that the PORV has been properly closed or isolated, if necessary. Additional guidance is also provided to address upper head voiding and PORV operation, as described in the preceding cautions.

RCS pressure is to be reduced as rapidly as possible in an effort to prevent steam generator overfill and the ultimate challenge to the steam generator safeties, which would be a direct radioactive release to the environment. Therefore, if using the spray valves, the operator is instructed to open all available spray valves fully, whether one is available or both are available.

If the PORVs are the method to be used for depressurization, then the operator is instructed to open only one PORV.

Once RCS depressurization is initiated, it is to continue until one of the following three conditions is met:

1. RCS pressure is less than the ruptured SG pressure <u>AND</u> pressurizer level greater than 7% {50%}
2. Pressurizer level greater than 73% {50%}
3. Subcooled margin less than 16°F {45°F}

As pressure decreases, break flow decreases and SI flow increases, resulting in pressurizer level recovery. Natural circulation conditions could result in bubble formation in the upper head, causing pressurizer level to suddenly increase. In addition, a slow depressurization could result in pressurizer level reaching the 73% criterion prior to stopping break flow.

Depressurization of the RCS is terminated on high pressurizer level to prevent filling the pressurizer with resultant loss of pressure control. For most SGTRs, termination of SI in subsequent steps will allow pressurizer level to decrease, which will help stop break flow if not already stopped prior to reaching the high level criteria.

For multiple tube failures, it may be necessary to decrease RCS pressure below that of the ruptured steam generator pressure in order to restore pressurizer level. In this case, reverse flow from the ruptured steam generator to the RCS will supplement SI flow to recover pressurizer level and allow SI termination. This is the case for which the subcooling criteria apply. If RCS pressure was allowed to continue decreasing to saturation in an attempt to restore pressurizer level, voiding in the RCS could result in unreliable pressurizer level indication and a delay in SI termination. To avoid this, depressurization of the RCS is terminated if minimum RCS subcooling is reached.

With pressurizer spray stopped, both pressurizer pressure and level should increase toward equilibrium conditions. If level continues to increase without a corresponding increase in pressure, leakage from the spray valves should be suspected. If this persists until filling of the pressurizer is imminent, appropriate measures to stop the leakage, such as stopping the RCPs supplying the failed spray valves, or isolating the auxiliary spray line, should be performed. Depressurization of the RCS due to leakage from the spray valves will stop once the pressurizer fills with water. Therefore, this condition should not prevent or delay termination of SI flow in subsequent steps when all the necessary criteria are satisfied.

RCS Pressure Rising

The use of a pressurizer PORV results in a loss of reactor coolant. Since all SI pumps will be stopped in subsequent steps, this PORV must close properly to ensure that adequate coolant inventory can be maintained with only normal charging capacity. Although SI reinitiation criteria are provided to ensure that adequate core cooling will be maintained,

minimizing pressurized thermal shock and boron dilution concerns, this also aids in cooling the ruptured steam generator. This step provides guidance on establishing conditions for starting an RCP to prevent RCP damage and minimize any perturbations in RCS conditions.

Depressurization of the RCS may generate a steam bubble in the upper head region of the reactor vessel if no RCP is running. This bubble could rapidly condense during pump startup, drawing liquid from the pressurizer and reducing reactor coolant subcooling. If pressurizer inventory is not sufficient, level may decrease off-span. In addition, local flashing of reactor coolant could occur if RCS subcooling is not adequate. These conditions would require SI reinitiation, thereby increasing leakage into the ruptured steam generator, and may confuse the operator if such behavior was unexpected.

If a running RCP is determined not to have all support conditions, the operator is directed to secure the affected pump. If no RCP is running, RCP support conditions are checked to see if any pump may be started. An RCP will not be started unless all conditions are satisfied. The desired priority for starting an RCP is the B, A and C due to the order of desired spray flow. If more than one pump is running, the team is directed to minimize RCS heat input by securing all but one RCP.

A caution directs the operator to check for reactor head voiding prior to starting an RCP. If head voiding does exist as indicated by vessel level indication less than 100%, then the operator is further directed to ensure pressurizer level is greater than 67%, and subcooling is greater than 40°F. This is to ensure that sufficient volume exists in the pressurizer to maintain the heaters covered on an outsurge in the pressurizer when the bubble is quenched and collapsed by RCP flow. Ensuring the heaters are covered allows the operator to maintain RCS pressure control.

If no RCP can be started due to lack of support conditions or electrical power, then natural circulation flow should be verified satisfactory. The conditions indicative of natural circulation are provided and include RCS subcooling, stable or decreasing core exit TCs, and cold leg temperatures in the active loops approximately equal to saturation at the associated steam generator pressure. If these conditions are not verified, the operator should increase steam flow from the intact steam generators to establish and maintain natural circulation.

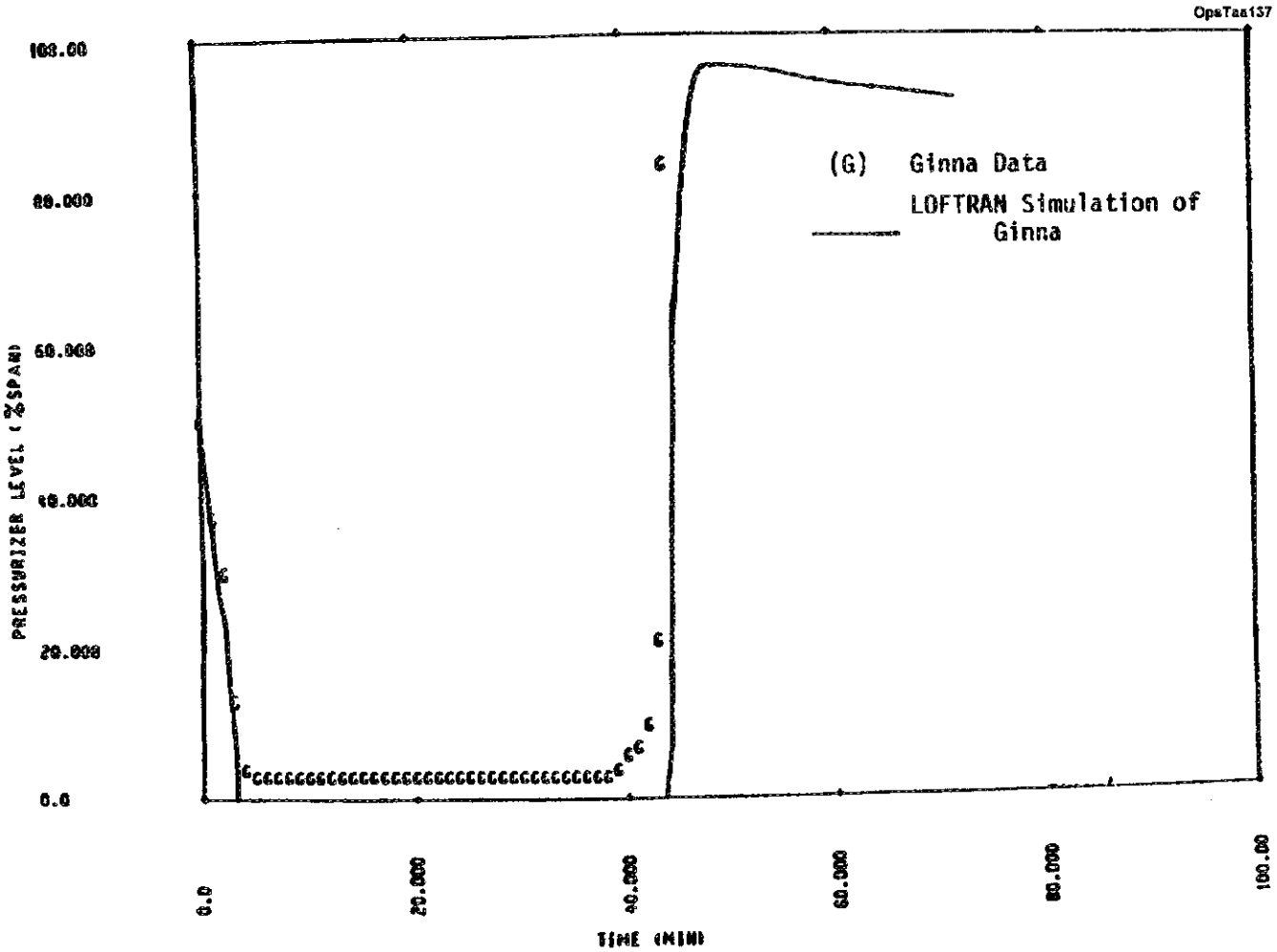

PRZR Level Response To Upper Head Voiding

Figure 25

38. 039K3.04 001/2/1/SGFP/C/A 2.5*/2.6*/NEW/FA011005/RO/

Unit 2 is at 45% power with the 1A SGFP running. The Low Pressure Stop valve closes due to an EH system malfunction. Which one of the following describes the response of the 1A SGFP five minutes later? The SGFP speed will _____

A. increase to 5400 rpm.

B. remain essentially the same.

C. decrease and the SGFP will go on BOILER control.

D. decrease until it stops with no SGFP trip annunciators.

A. Incorrect - Speed will not increase due to the HP gov taking over.

B. Correct - **remain essentially the same.**
The HP is shut at 45% power and the LP gov. has control. When the steam flow decreases due to the LP stop valve being closed, the HP gov will open when speed starts to drop. The final effect is that the SGFP will be at essentially the same speed as before.

C. Incorrect - The SGFP would already be on BOILER control. It would go to speed setter control when shutting down the SGFP when speed is lowered using the SGFP controller.

D. Incorrect - The SGFP would go all the way to zero if no steam was present, ie. in the case of the HP gov or stop valve being shut in addition to the LP stop valve closing.

As main turbine load is increased, reheat steam pressure in the shell side of the MSRs also increases. At approximately 25 percent main turbine power, the reheat steam pressure is high enough to cause the feed pump turbine speed to increase. In an effort to maintain the desired feed pump turbine speed, the control system begins to shut the HP governor valve. Once the HP governor valve approaches the fully shut position, the control system starts closing the LP governor valves. During 100 percent power operation, the governor valve alignment is as follows:
1. The HP governor valve is fully shut.
2. The LP governor valve is throttled partially shut and consequently controls feed pump turbine speed.

039K3.04 Main and Reheat steam - Knowledge of the effect that a loss or malfunction of the MRSS will have on the following: MFW pumps

Evaluate abnormal plant or equipment conditions associated with Condensate and Feedwater System and determine the local actions needed to mitigate the consequence of the abnormality (OPS40201B12).

Discuss the operation and alignment of each major component including precautions and limitations of operation, and applicable procedures, associated with the Condensate and Feedwater including (OPS40201B11)
• Steam Generator Feed Pumps

Explain the purpose and operation including the design features and functions, capacities, and protective interlocks of each major component associated with the Condensate and Feedwater System including (OPS40201B02):
• Steam Generator Feed Pumps

Steam Generator Feed Pump Turbine Steam Supply

Main steam and reheat steam from moisture separator reheaters (MSRs) 1A and 2A are supplied to the feed pump turbine through separate headers, stop valves, and governor valves. Main steam is used to initially roll the turbine and supply the driving force until reheat steam is available in sufficient quantity. Main steam supplies the steam requirements of the feed pump turbine to approximately 25 percent power when reheat steam, controlled by the LP governor valves, takes over.

Bumpless transfer between the steam supplies is accomplished by the control system.

Initially, as the feed pump turbine accelerates from operation on the turning gear to operating speed, both the LP and HP stop valves are open. The first governor valve to open on an increase speed signal from the control system is the LP governor. Since reheat steam is not available, the turbine speed does not increase. Once the LP governor valves begin to reach their fully open position, the HP governor valve begins to open. The turbine now accelerates to the demanded speed using the main steam supply via the HP governor valve.

As main turbine load is increased, reheat steam pressure in the shell side of the MSRs also increases. At approximately 25 percent main turbine power, the reheat steam pressure is high enough to cause the feed pump turbine speed to increase. In an effort to maintain the desired feed pump turbine speed, the control system begins to shut the HP governor valve. Once the HP governor valve approaches the fully shut position, the control system starts closing the LP governor valves. During 100 percent power operation, the governor valve alignment is as follows:

1. The HP governor valve is fully shut.
2. The LP governor valve is throttled partially shut and consequently controls feed pump turbine speed.

SGFP Low Pressure Oil System and EH Fluid Systems

(Figure 6, Table 6)

The relationships of the various elements that comprise the LP oil system and the high pressure fluid system are shown diagrammatically in Figure 6. The two systems are separate and distinct from one another, serving different functions and each employing a different hydraulic medium. The LP oil system uses refined mineral oil, while the HP system requires a synthetic fluid. The two systems are linked together by the interface trip valve.

The LP oil system functions to provide lubricating oil, LP trip oil, and remote trip reset oil. The LP oil requirements are supplied from the oil reservoir assembly built into the inlet end of the

SGFP Emergency Oil Pump

A three-position handswitch (STOP/AUTO/START) on the MCB controls the emergency oil pump for each SGFP. In the AUTO position, the pump automatically starts on low oil pressure. Pump status lights indicate above the switch.

SGFP EH Control Panel (Upper)

The upper control panel, located on the MCB, for each SGFP contains the following indications:

1. High pressure governor valve open light (red)
2. High pressure governor valve closed light (green)
3. Turbine tripped light (red)
4. Speed setter control light (white)
5. Boiler control light (amber)
6. Low pressure governor valve open light (red)
7. Low pressure governor valve closed light (green)
8. Boiler feed pump turbine speed indication (0-6500 rpm)

SGFP EH Control Panel (Lower)

(Figure 12)

The lower control panel, located on the MCB, contains the controls necessary for remote operation of the SGFP turbine. The HP and LP stop valves may be opened, closed, or tested; the turbine may be latched or tripped; and the governor valve position may be adjusted.

Depressing the appropriate push buttons on the control panel fully opens both the HP and LP stop valves. The push buttons illuminate when the stop valves are fully open. As either stop valve begins to open, interlock contacts open to stop the turning gear.

Test pushbuttons for the low pressure and the high pressure stop valves are utilized to verify these valves cycle when the test button is depressed for surveillance testing.

With the turning gear disengaged, interlock contacts close to enable the speed setter to open the governor valves. Depressing the INCREASE SPEED push button opens the governor valves. At a predetermined speed, turbine control will transfer to the feedwater control system. This transfer will be indicated by illumination of the BOILER CONTROL light on the upper panel. The speed setter will automatically run to its maximum speed setting since it no longer controls the turbine. The INCREASE SPEED push button will illuminate upon reaching the maximum setting.

3200 rpm

5400 rpm

Pressing the DECREASE SPEED push button will decrease the speed setter setting until the turbine control transfers to the EH control system. A turbine trip will result in the speed setter running back to minimum speed setting. The DECREASE SPEED push button will illuminate upon reaching the minimum setting. The turbine trip signal will also shut the stop and governor valves immediately.

SGFP Turning Gear Motor

(Figure 13)

The SGFPs are placed on their turning gears to allow even cooling of the SGFP rotor and prevent SGFP rotor bowing. A two-position handswitch (OFF/AUTO) on the MCB controls each SGFP turning gear motor. Following a turbine trip, the turning gear will automatically engage under the following conditions:

1. Both the HP and LP stop valves are fully closed.
2. SGFP turbine speed is less than or equal to 2 rpm.
3. Lube oil pressure is greater than or equal to 15 psig.

The turning gear will automatically disengage on motor over-temperature.

While the turning gear is designed to operate automatically, automatic operation hinges on the premise that the rotor has been rotating (greater than 2 rpm), and the turbine has been tripped before the rotor comes to rest. SGFP speed will not normally decrease below 2 rpm following a trip due to condensate pump discharge flow through the SGFP and recirc line to the condenser. After maintenance or whenever the motor breaker is opened, the turning gear must be manually started. With the MCB switch in AUTO, the turning gear override start push button on the SGFP supervisory instrument cabinet must be momentarily depressed. If the stop valve and oil pressure conditions are met, the motor will start and engage the turning gear. If the SGFP rotor does not start rotating, it may be necessary to manually engage the turning gear clutch.

SGFP Vibration Monitoring Panel

The vibration monitoring panel provides indications and alarms associated with both SGFPs. The system monitors four bearings--two per pump. Provisions are made for calibration, set point adjustment, individual indication, and alarm reset on the MCB panel. A bearing also may be monitored on an MCB recorder as determined by the time sequencer.

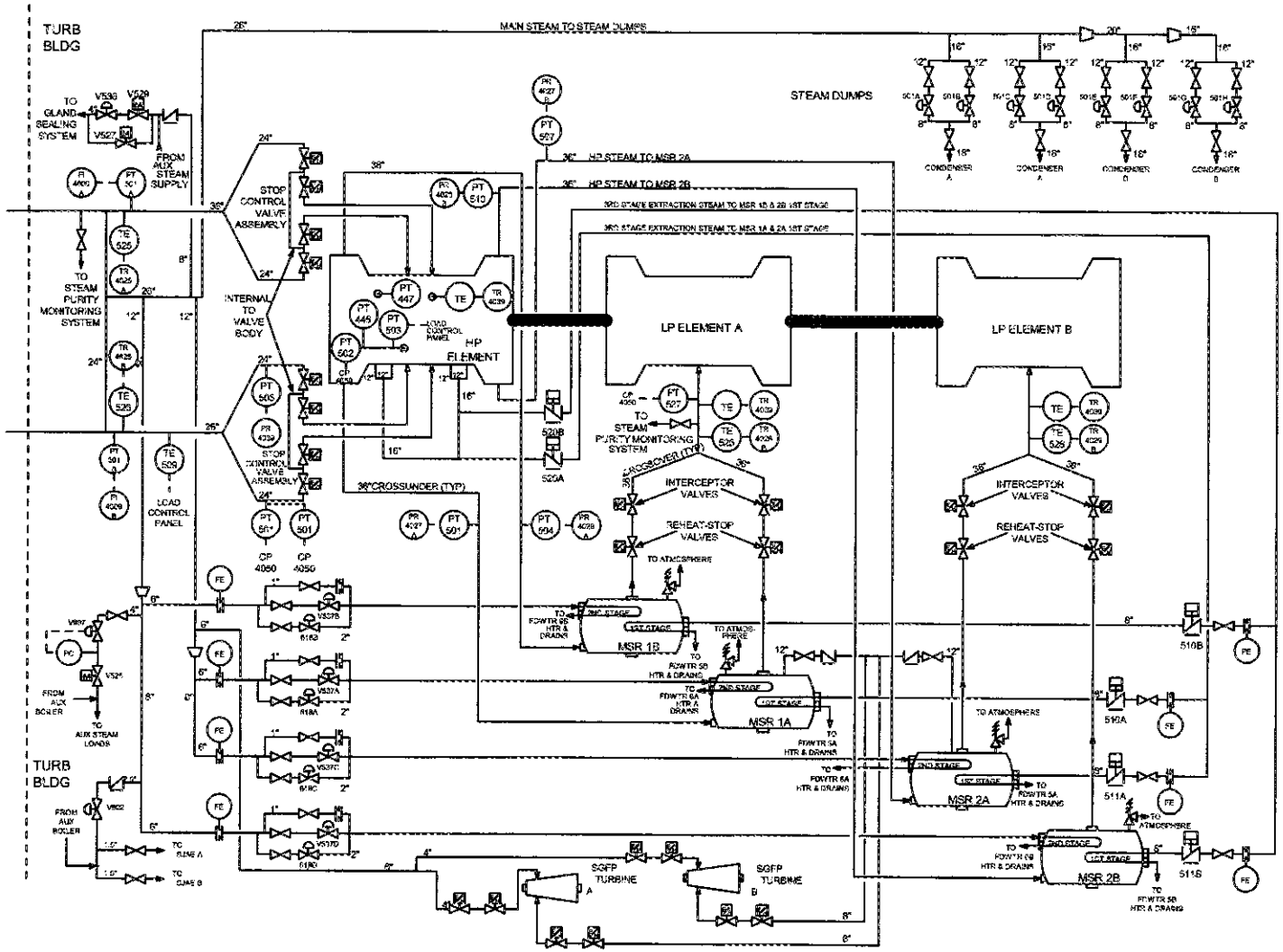

Main and Reheat Steam System
(Detailed-Sheet Two)

Figure 3

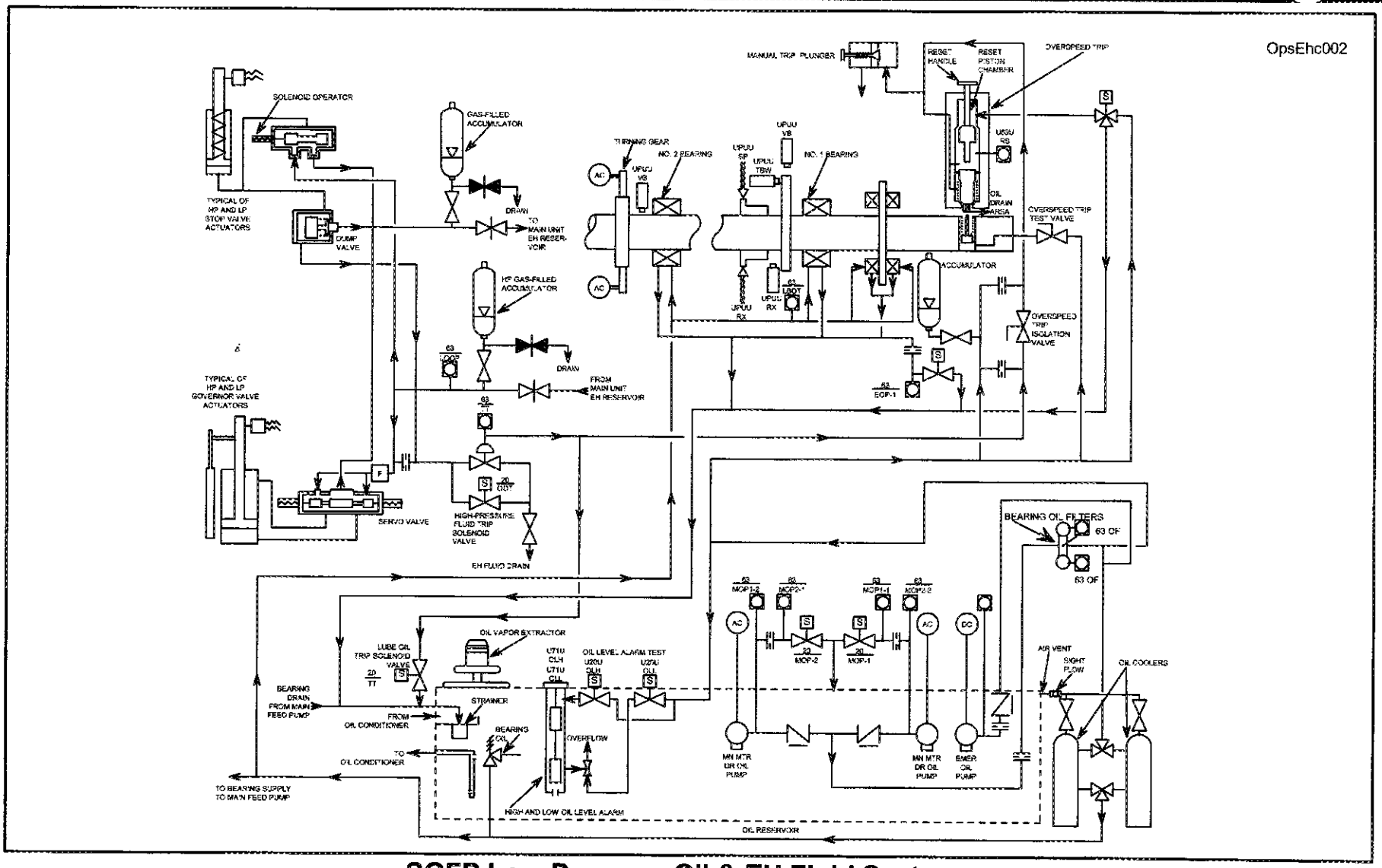

SGFP Low-Pressure Oil & EH Fluid Systems

Figure 6

4.3.16 Open the SGFP high pressure stop valve by depressing the HIGH PRESSURE STOP VALVE OPEN pushbutton.

4.3.17 Dispatch an operator to the SGFP to observe the pump during startup and to report any rubbing or vibration.

4.3.18 Check that the following valves are open:

- 1A(1B) SGFP MINIFLOW (SECONDARY VALVE INDICATION PANEL)
- 1A(1B) SGFP RECIRC FCV INLET ISO N1N21V502A(B)
- 1A(1B) SGFP SUCTION ISO N1N21V526A(B)

4.3.19 Verify that the 1A(1B) SGFP has either been on the turning gear or freewheeling on mini-flow for at least 45 minutes.

CAUTION: Abnormal vibration can result if the SGFP is rolled up to speed without having been on the turning gear, or freewheeling for at least 45 minutes.

CAUTION Accelerate the SGFP through its critical speed (2300- 2400 RPM) as rapidly as possible.

4.3.20 Roll the SGFP to minimum controller speed by depressing the INCREASE SPEED pushbutton. 0 to 3200 rpm + above

4.3.21 Monitor the SGFP supervisory instruments to ensure rotor vibration does not exceed the limits as specified in Precaution 3.7. Ensure thrust bearing wear limits are not exceeded as specified in Precaution 3.8.

4.3.22 WHEN the "Boiler Control" light illuminates, THEN turbine speed control is transferred to the SGFP controller SK-509B (C). 3200 rpm auction-eared low w/ speed safety control

CAUTION: SGFP may trip when the first out panel is reset.

4.3.23 Reset 1A and 1B SGFP first out panels.

NOTE: Below ~ 25% power the LP GOV valve should be open with the HP GOV valve throttled.

4.3.24 Verify the LP GOV valve AND HP GOV valve has the proper position indication for plant conditions.

39. 040G2.1.2 001/1/1/SGTR/C/A 3.0/4.0/BANK/FA011005/RO/CVR

EEP-2.0, Faulted Steam Generator Isolation, is in progess. It provides several steps which are required to identify and isolate any faulted SG. One of the isolation steps has the operator isolate all feedwater to the affected SG(s).

Which one of the following is the basis for this isolation step?

A. To minimize RCS cooldown, energy release, and secondary mass release following a steam line break.

B. To ensure proper diagnosis of a steam generator tube rupture if it occurs in the faulted steam generator.

C. To prevent damage to Environmentally Qualified (EQ) Equipment in the vicinity of the steam generator fault.

D. To ensure the release to the environment remains below the 10CFR100 limits on a design basis Steam Break outside of containment.

A. Correct. **To minimize RCS cooldown and mass and energy release following a steam line break.**
Per the Background Document for EEP-2.0.

B. Incorrect. Even though it is easier to diagnose a SGTR in a faulted SG which is not being fed, this is not the basis for isolating AFW to the faulted SG.

C. Incorrect. Even though hot steam has the potential to damage equipment, EQ Equipment is designed to withstand hostile accident environments. It is good practice to minimize the length of time a steam leak exists because of potentially adversely affecting NON-EQ Equipment, but this is not the basis for isolating AFW.

D. Incorrect. This would be a concern in the event of a SGTR, but radiation release in a steam fault is not expected.

APE: 040 Steam Line Rupture

2.1 Conduct of Operations

2.1.2 **Knowledge of operator responsibilities during all modes of plant operation.**
(CFR: 41.10 / 45.13) RO 3.0

6. Evaluate plant conditions to determine if any system components need to be operated while performing EEP-3. (OPS52530D06)

STEP: Isolate Faulted SG(s)

PURPOSE: To isolate all feedwater to and steam flow from the faulted SG(s)

BASIS:

Isolation of the feedwater to the faulted SG maximizes the cooldown capability of the nonfaulted loops following a feedline break and minimizes the RCS cooldown and mass and energy release following a steamline break. Isolation of steam paths from the faulted SG also minimizes the RCS cooldown and mass and energy release to containment. In addition, isolation of these steam paths could isolate the break.

ACTIONS:

- o Determine if SG PORVs are closed
- o Determine if appropriate valves cannot be closed
- o Isolate main feedline
- o Isolate AFW flow
- o Close steam supply valves to turbine-driven AFW pump
- o Determine if SG blowdown isolation valves are closed
- o Isolate other secondary piping
- o Close appropriate valves
- o Dispatch operator to locally close appropriate valves or block valves

INSTRUMENTATION:

- o SG PORVs position indication
- o Position for plant specific valves associated with feedwater to and steam flow from SGs

CONTROL/EQUIPMENT:

- o FW isolation valve control switches
- o AFW isolation valve control switches
- o Steam supply vales to turbine-driven AFW pump control switches
- o SG PORV control switches
- o SG blowdown isolation valve control switches
- o Other plant specific secondary piping isolation valve control switches

KNOWLEDGE:

Recovery actions affected by isolation of the faulted SG or secondary break

PLANT-SPECIFIC INFORMATION:

Other secondary piping where a break could cause SG pressure to decrease in an uncontrolled manner

STEP: Check CST Level - GREATER THAN (U.01)

PURPOSE: To determine if an alternate water supply is necessary for the AFW pumps

BASIS:

When CST level decreases below (U.01), inadequate suction pressure may result in AFW pump trip. An alternate suction source should be provided. During secondary break events, depletion of the CST is of greater concern than during other types of breaks.

ACTIONS:

- o Determine if CST level is greater than (U.01)
- o Switch to alternate AFW water supply

INSTRUMENTATION:

CST level indication

CONTROL/EQUIPMENT:

Plant specific controls to switch to alternate AFW water supply

KNOWLEDGE:

N/A

PLANT-SPECIFIC INFORMATION:

- o (U.01) CST low level switchover setpoint in plant specific units.
- o Alternate suction source for AFW pumps

CAUTION: Any faulted SG or secondary break should remain isolated during subsequent recovery actions unless needed for RCS cooldown.

PURPOSE: To alert the operator that an isolated SG should not be used for cooldown unless it is the only one available

BASIS:

During isolation of a faulted SG or secondary break, normal cooldown paths are likely to be isolated. Cooldown procedures may direct the operator to open one of the isolated cooldown paths resulting in a reinitiation of the event. However, in cases where an isolated SG is the only SG available, this SG can be unisolated and used for RCS cooldown.

ACTIONS:

Determine if a faulted SG is needed for RCS cooldown

INSTRUMENTATION:

N/A

CONTROL/EQUIPMENT:

N/A

KNOWLEDGE:

N/A

PLANT-SPECIFIC INFORMATION:

N/A

40. 041G2.2.2 001/2/2/STM DUMPS/C/A 4.0/3.5/BANK-N/FA011005/RO/

Unit 1 is at 32% power and ramping up. All systems are in automatic and controlling properly. Control bank "D" is at 72 steps and controlling RCS temperature.

A DEH control system malfunction results in a turbine trip. The control rods drive into the core 12 steps prior to being taken to MANUAL. The control rods and the steam dumps are used to restore reactor power to 32%. Bank "D" control rods were raised to 65 steps.

Which one of the following describes the action(s) should be taken in accordance with AOP-3.0, Turbine Trip Below P-9 Setpoint?

A. Reduce reactor power to 18%, then swap the steam dumps to the steam pressure mode of operation.

B. Maintain reactor power and slowly open the atmospheric relief valves to close the steam dump valves, then swap the steam dumps to the steam pressure mode of operation.

C. Reduce reactor power to less than 8%, slowly open the atmospheric relief valves to close the steam dump valves, then swap the steam dumps to the steam pressure mode of operation.

D. Reduce reactor power to between 8% and 15%, slowly open the atmospheric relief valves to close the steam dump valves, then swap the steam dumps to the steam pressure mode of operation.

A - Incorrect; Power level is incorrect. a large plant transient would be caused by this action when the steam dumps closed and then reopened.

B - Incorrect; Power level is incorrect, too high.

C - Correct; **Reduce reactor power to less than 8%, slowly open the atmospheric relief valves to close the steam dump valves, then swap the steam dumps to the steam pressure mode of operation.**
Per step 9 of AOP-3.0 and SOP-18.0, Steam Dump System. Power must be low enough for ARV to pass all the steam load.

D - Incorrect; Power level is incorrect, power level is for steam dumps already being in steam pressure mode. If the Stm dumps were shifted to stm press mode at this time then the dumps would close and Tavg would increase.

041G2.2.2 Steam Dump System - Ability to manipulate the console controls as required to operate the facility between shutdown and designated power levels.

Describe the sequence of major actions associated with AOP-3.0, Turbine Trip < P-9 Set Point (OPS52520C04).

Evaluate plant conditions to determine if any system components need to be operated while performing AOP-3.0, Turbine Trip < P-9 Set Point (OPS52520C05).

Analyze plant indications to determine the successful completion of any step in AOP-3.0, Turbine Trip < P-9 Set Point (OPS52520C06).

AOP-3.0-52520C04 #2
2003 nrc exam - only question that met KA

4.3 Placing the Steam Dumps in the Steam Pressure Mode

CAUTION: When reactor power is ≥ 15%, the steam dumps should only be aligned to the Steam Pressure Mode as necessary to support maintenance or testing and the time in this condition should be minimized (current analysis assumes < 50 hours per year).

NOTE: The following steps should be completed prior to removing the main generator from the grid.

4.3.1 Verify that all steam dump valves indicate closed.

4.3.2 Verify STM HDR PRESS PK-464 in MAN with 0 demand.

4.3.3 Verify steam pressure indicated on PI-464A is correct for current plant conditions.

4.3.4 Verify STM DUMP INTLK TRAIN A and B in ON.

4.3.5 Verify that the STM HDR PRESS PK-464 potentiometer is set at 8.35.

4.3.6 IF reactor power is ≥ 15%, THEN perform the following:

NOTE: In the following step, 0-5 volts corresponds to 0.0-10.0 on the PK-464 potentiometer. The 4.08 volt limit is set to ensure no more than a 25 psig error in the setpoint with the potentiometer set at 8.35.

4.3.6.1 In Process Control Cabinet 8 (Q1H11NGPIC2505H), Card location C8-622, have I&C measure voltage between Setpoint (SP) and Common (COM). If voltage is < 4.08 volts, consult the OSS to determine if further troubleshooting is warranted prior to placing the steam dumps in steam pressure mode.

4.3.7 Place STM DUMP MODE SEL TRAINS A-B in STM PRESS.

4.3.8 Place STM HDR PRESS PK-464 in AUTO.

NOTE: As plant shutdown continues, verify that steam dump operation begins when steam pressure reaches approximately 1005 psig.

Step	Action/Expected Response	Response NOT Obtained

___ 7 **Stop both heater drain pumps.**

HDP
[] 1A
[] 1B

___ 8 **Check main turbine status.**

8.1 WHEN main turbine is < 600rpm, THEN verify main turbine shaft lift pump - RUNNING.

MN TURB
SHAFT LIFT PUMP
[] N1N33P504

8.2 Verify proper turbine generator shutdown using FNP-1-SOP-28.1, TURBINE GENERATOR OPERATION.

****

CAUTION: The steam dumps will close if they are transferred from TAVG mode to STM PRESS mode. Therefore, the steam dump demand must be reduced to 0% prior to transfer.

****

****

CAUTION: A reactor trip will occur if either intermediate range high flux trip bistable does not reset before reactor power is reduced below 10%.

****

9 **IF steam dump system in TAVG mode, THEN transfer to STM PRESS mode.**

9.1 Reduce reactor power to less than 8%.

9.2 Place standby CNDS PUMP in STOP.

Step 9 continued on next page.

___Page Completed

41. 054AK1.01 001/1/1/FEED RUPTURE/C/A 4.1/4.3/MOD/FA011005/RO/

Unit 1 experienced an event 2 minutes ago and the following conditions now exist:

- Reactor power is 26% and STABLE.
- RCS Tavg is at normal operating temperature and STABLE.
- RCS pressure is at normal operating pressure and STABLE.
- 1B and 1C SGs are operating normally.
- Containment pressure is 2.2 psig and rising slowly.

The following conditions now exist on 1A SG:

• Steam flow	STABLE
• Feed flow	RISING
• Pressure	DECREASING
• Level	35% and DECREASING RAPIDLY

Which one of the following are the correct actions to take for this event?

A. Trip the reactor and close the MSIVs, then initiate a Safety Injection and isolate feed flow to 1A SG.

B. Ramp to 1-2% power and feed the SGs as necessary with AFW pumps to keep levels in the operating band.

C. Trip the reactor and close the MSIVs, start AFW to increase 1A SG water level to the normal band and recover the plant IAW the UOPs.

D. Commence ramping off line at 10 MW/min, open the FRV valves as necessary to increase the feed rate, start AFW and feed 1A SG to keep level in the operating band.

A - Correct- **Trip the reactor and close the MSIVs, then initiate a Safety Injection and isolate feed flow to 1A SG.**
Main Feed line break INSIDE containment due to the indications given. with Ctmt pressure rising and no rad moniotrs in alarm, AOP-14 would be entered as well as the rise in FW flow and decreasing SG level. With Ctmt pressure greater than 2 psig, AOP-14 has the operator trip the reactor and then close the MSIVs. When EEP-0 is entered the operator would initiate a SI at step 4 due to pressure rising in ctmt. When the team reached EEP-2 the feed flow would be secured to the 1A SG. This could also be done early if the team noticed that the event was a steam/feed leak and tis would help protect ctmt.

B - Incorrect- The ramp criteria is Loss of Feedwater AOP actions.

C - Incorrect, Trip the Rx is correct and close MSIVs, however, increasing the feed rate to the SG to raise level would cause a challenge to ctmt integrity and is not procedurally guided.

D - Incorrect, This would be AOP-17 actions if the event is not diagnosed properly. If it were possible to stay on line and if the leak was not in CTMT, then this might make sense.

054AK1.01 Loss of Main Feedwater: Knowledge of the operational implications of the following concepts as they apply to Loss of Main Feedwater (MFW):
MFW line break depressurizes the S/G (similar to a steam line break)

Describe the sequence of major actions associated with AOP-14.0. (OPS52521O04)

Evaluate plant conditions and determine if transition to another section of AOP-14.0 or to another procedure is required. (OPS52521O08)

modifed from EEP-2-52530C02 #1
Source: Byron 2000-301
2001 nrc exam

original question

QUESTIONS REPORT

for 054ak1.01 Questions

EEP-2-52530C02 001/DESELECT//C/A (LEVEL 2/3) PROC/APE054AK1.01////

Unit 1 experienced an event 2 minutes ago and the following conditions now exist:

- Reactor power is 100% and STABLE.
- RCS Tavg is at normal operating temperature and STABLE.
- RCS pressure is at normal operating pressure and STABLE.
- Containment pressure is INCREASING.

The following conditions now exist on Unit 1 Steam Generators:

	'A'	'B'	'C'
Steam flow	STABLE	STABLE	STABLE
Feed flow	PEGGED HIGH	STABLE	STABLE
Pressure	STABLE	STABLE	STABLE
Level	DECREASING	STABLE	STABLE

Which ONE of the following events is in progress?

A. Main Feed line break INSIDE containment.

B. Main Steam line break INSIDE containment.

C. 1A Main Feed Water Regulating valve has failed OPEN.

D. 1A Feed Flow Indicator has failed high.

A - Correct
B - Incorrect, Tavg is stable.
C - Incorrect, S/G level decreasing and containment pressure increasing.
D - Incorrect, Containment pressure increasing.
Per discussions with JLD, review of the accident analysis section and the containment section of the FSAR, a review of the KA catalog, a review of EEP-2 and its background document, and a review of the EEP-2 and Accident Analysis lesson plans, it was agreed our procedural flow is not affected in any way by the determination of whether the event is a steam break or a feed line break. For this reason the questions centered around the determination of whether the event is a steam leak, or a feedwater leak are being DESELECTED.
Source: Byron 2000-301
2001 nrc exam

FIGURE 1

Allowable error between SF or FF channels in each set. Loop A, B and C.

$\times 10^6 \frac{\text{lbm}}{\text{hr}}$

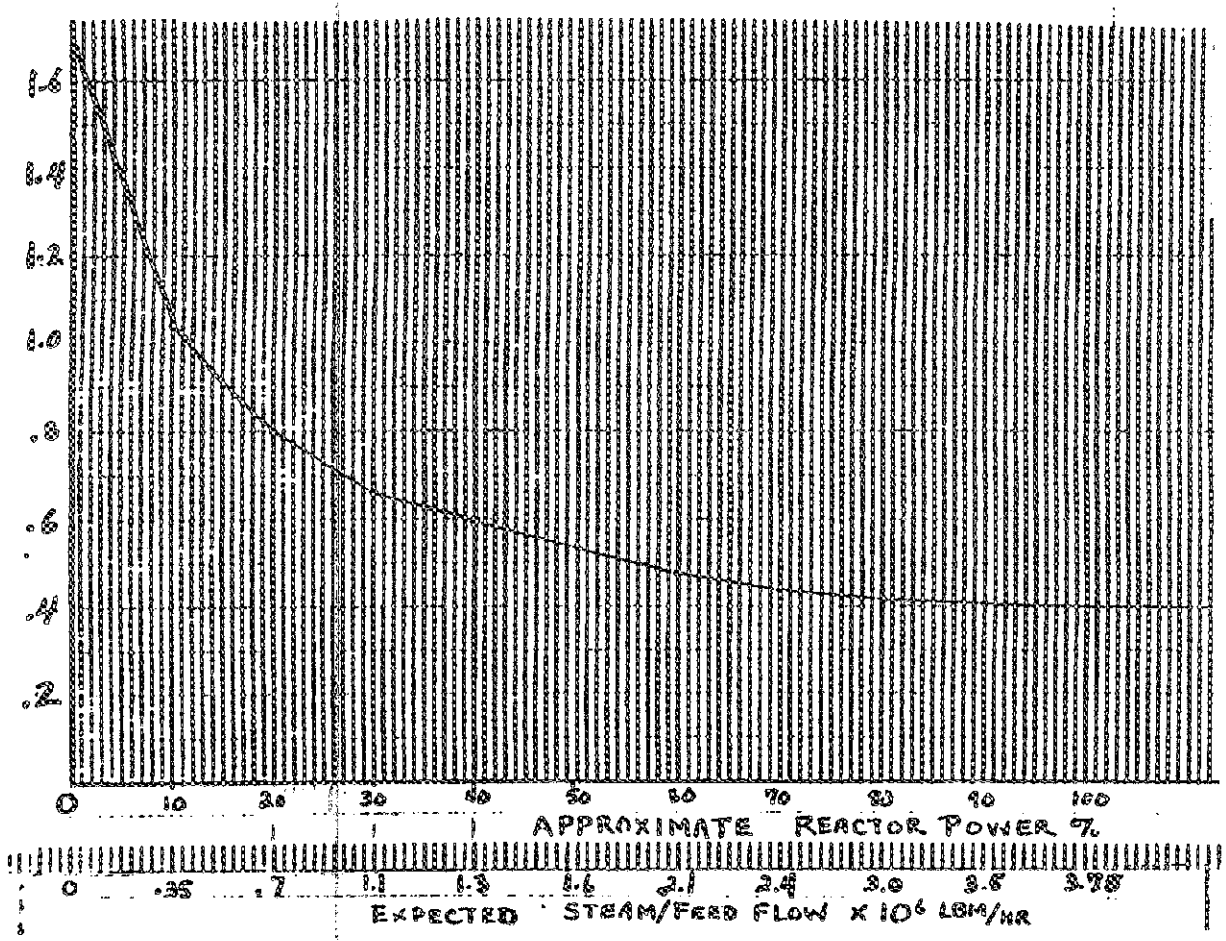

Instructions: Determine current reactor power and find corresponding power on horizontal axis of above graph. Follow vertical line from power level to where it intersects curve. Read value for allowable error between each feed flow channel per set and each steam flow channel per set in each loop. IF one set is out of the allowable tolerance, THEN find expected STEAM/FEED flow corresponding to current power level to determine inoperable channel.

≈ .9 @ 25% power

$\frac{.8}{.4} = \frac{2.5}{.1}$

DETAILED DESCRIPTION

Purpose

This procedure provides actions for response to a secondary system leak. This procedure is applicable in Modes 1, 2, and 3.

Entry Conditions

AOP-14.0, "Secondary System Leakage," is entered when the symptoms or characteristics of secondary system leakage are evident.

The procedure is entered when excessive secondary leakage is indicated by any of the following:

1. Unexplained reduction in Tavg with Tavg below Tref
2. Unexplained reduction in RCS/PRZR pressure and/or level
3. Unexplained rise in steam flow
4. Unexplained rise in feedwater flow
5. Unexplained reduction in steam generator level and/or pressure
6. Report of excessive secondary/steam leakage
7. Unexplained rise in containment temperature, humidity, and/or pressure without RMS indication
8. Steam generator atmospheric relief valve and/or main steam safety valve stuck open
9. Steam dump demand less than expected for existing reactor power

Action Steps

Evaluate plant status for safe operation.

This step has the operator check pressurizer level and pressure, steam generator pressures, containment pressure, reactor power/steam flow mismatch to determine if it is safe for continued operation. If the required conditions are not met, the operator is directed to trip the reactor and close the steam generator main steam isolation and bypass valves.

There are four Notes prior to this step.

Note: "If the secondary leakage is upstream of the MSIVs, closing the MSIVs in Step 1 may result in a safety injection." If the secondary leakage is upstream of the MSIVs and they are

closed in step 1 RNO, a steam line differential safety injection may occur. If one steam line drops to 100 psig less than the other two, the operator would then go to EEP-0, "Reactor Trip or Safety Injection."

Note: "Step 1 assumes attempts have been made to stabilize plant status in accordance with normal operating procedure(s) in effect." If attempts to stabilize the plant using normal operating procedures are ineffective, then the criteria in step 1 probably will not be met, and the operator will transition to the RNO column.

Note: "A rule of thumb for steam dumps is ~ 0.5% reactor power equates to ~ 1% Steam Dump demand." This reflects the fact that the steam dumps will handle greater than design steam flow (~40% of full power steam flow). During low power operations when dumping steam using the steam dumps, this thumb rule can aid the operator in determining the amount of steam produced by the reactor that is being received by the steam dumps.

Note: "Step 1 is a continuing action step." If, at any time during the procedure, the criteria in step 1 cannot be maintained, then the operator should go to the RNO for step 1. The operator should trip the reactor; close the MSIVs and MSIV bypass valves, and enter EEP-0.

Identify SECONDARY leakage source.

This step is intended to identify the source of leakage and isolate. Items checked are:

- Steam generator atmospheric relief valves
- Main steam safety valves
- Steam dumps
- Turbine building components
  - Feedwater heater vents and drains
  - Main steam drain pots
  - Turbine drains
  - Moisture separator reheaters (MSRs)
- Steam generator blowdown
- Containment sump level/radiation monitors
- Containment conditions – temperature, pressure and humidity

A. **Purpose**

This procedure provides actions for response to a secondary system leak.

This procedure is applicable in Modes 1, 2, and 3.

B. **Symptoms or Entry Conditions**

This procedure is entered when excessive secondary leakage is indicated by any of the following:

a. Unexplained reduction in Tavg with Tavg below Tref.

b. Unexplained reduction in RCS/PRZR pressure and/or level

c. Unexplained rise in steam flow

d. Unexplained rise in feedwater flow

e. Unexplained reduction in steam generator level and/or pressure.

f. Report of excessive secondary/steam leakage

g. Unexplained rise in containment temperature, humidity, and/or pressure without RMS indication.

h. Steam generator atmospheric relief valve and/or main steam safety valve stuck open.

i. Steam dump demand less than expected for existing reactor power.

Step	Action/Expected Response	Response NOT Obtained

NOTE:

- If the secondary leakage is upstream of the MSIVs, closing the MSIVs in step 1 may result in a safety injection.
- Step 1 assumes attempts have been made to stabilize plant status in accordance with normal operating procedure(s) in effect.
- A rule of thumb for steam dumps is ~ 0.5% reactor power equates to ~ 1% steam dump demand. This reflects the fact that the steam dumps will handle greater than design flow.
- Step 1 is a continuing action step.

__ 1 **Evaluate plant status for safe operation.**

- Pressurizer level GREATER THAN 15%

  AND

- Pressurizer pressure GREATER THAN 2000 psig

  AND

- Steam generator pressure GREATER THAN 650 psig

  AND

- Containment pressure LESS THAN 2 psig

  AND

- IF main generator on line, THEN (check reactor power)/(turbine power + any steam dump power) mismatch LESS THAN 10%.
- IF main generator off line, THEN check reactor power less than ~ 15%.

1 Perform the following.

1.1 Verify reactor tripped.

1.2 IF reactor tripped, THEN CLOSE SG main steam isolation and bypass valves.

SG	1A	1B	1C
1A(1B,1C) SG MSIV - TRIP Q1N11HV	[]3369A []3370A	[]3369B []3370B	[]3369C []3370C
1A(1B,1C) SG MSIV - BYPASS Q1N11HV	[]3368A []3976A	[]3368B []3976B	[]3368C []3976C

1.3 IF SG main steam isolation and bypass valves did not close, THEN place associated test switch to TEST position.

Affected SG	1A	1B	1C
1A(1B,1C) SG MSIV - TEST Q1N11HV	[]3369A/70A	[]3369B/70B	[]3369C/70C

1.4 Go to FNP-1-EEP-0, REACTOR TRIP OR SAFETY INJECTION.

__ Page Completed

reactivity available from the rods would be greatly reduced. For this reason, rod insertion limits are provided. By ensuring that the control rods are always above the insertion limit, the rods are guaranteed to provide sufficient shutdown margin.

Concerns and Consequences of a Steam Line Break

In summary, faulted SGs are isolated in EEP-2 for the following three reasons:

1. To minimize the RCS cooldown
2. To possibly isolate the break
3. To minimize the mass/energy release to containment

Isolation minimizes the loss of secondary system water inventory that threatens the long-term heat removal capability of the plant. Additionally, without isolation, the large energy release may seriously endanger the containment building integrity.

If the steam release is caused by a valve failure, the DNB ratio will remain above the design limit of 1.23, and the dose limits of 10CFR20 will be met.

The overall concern with steam line ruptures is the prevention of core damage and loss of long-term cooling. For large steam line breaks, the radiation limits imposed by 10CFR100 must be met. In actuality, the Final Safety Analysis Report (FSAR) will demonstrate that margin to DNB exists even for the double-ended break of a main steam line.

The consequences of a secondary break vary considerably, depending upon several system parameters: initial power level, location of break, size of break, safety systems that are operational, control systems that are operational, and any failures that occur. Secondary faults can best be discussed by considering small breaks, intermediate size breaks, and large breaks.

If normal plant systems can keep up with the loss, the break is considered to be a small break. If the break is so large that the protective functions of reactor trip, SI, and steam line isolation occur within five minutes, the break is considered to be a large break. The intermediate category includes all breaks in between. Although these categories are arbitrary, they are helpful in describing how the plant responds to different sized breaks.

Small Secondary Break

Normal plant control systems are capable of maintaining nominal or near nominal operating conditions for small breaks in the secondary system, whether the break is on the steam

line or the feed line. For a small steam line break, the system transient would be similar to a small step load increase. The secondary system would indicate an increase in load with a resultant decrease in primary system average temperature and pressure. The control rods would withdraw from the core in an effort to restore the primary average temperature if the rod control system was in an automatic mode of operation and no rod stops are present. An increase in reactor power will occur with the increase in steam flow. This increase in power could initiate a high flux reactor trip. Due to the apparent increased load, the steam flow from the SGs would be increasing in at least one loop, depending on the location of the break. If the break occurred in the steam header, all loops would experience increased steam flow. Due to the increased steam flow, the feedwater control valves would modulate to a more open position in an attempt to maintain SG water level. As a result, the main feed flow in at least one loop (all loops if break is in steam header) would be increased. Another indication of this type of break would be a decreasing water level in the condenser hotwells, causing the makeup valve to stay open, and the condensate storage tank (CST) level to decrease.

The plant would respond in essentially the same way if a small feed line break occurred. The normal plant control systems could maintain near normal operating conditions. For the small feed line break, the feedwater control valve in at least one loop, depending upon the location of the break, would modulate to a more open position in an attempt to compensate for the flow out of the break and to maintain SG water level. The steam flow in all other loops would remain approximately normal. Again, water level in the CST would decrease slowly due to increased makeup requirements.

For either of the transients listed above, a containment temperature, pressure, or humidity increase would be observed if the break occurred inside containment. Also, containment sump level would increase, and it is likely that the containment cooler alarms would annunciate. If the break was outside containment, an audible or visual confirmation of the break could be possible.

It is not expected that an automatic reactor trip or SI would occur for a small break; therefore, the operator will most likely not enter the emergency procedures. The normal operating procedures would be used to perform an orderly plant shutdown if required.

Intermediate Size Secondary Break

The intermediate steam line break is categorized by a slowly decreasing steam line pressure in at least one loop, depending upon the location of the break. If the break occurs in the steam header, all loops will experience decreasing pressure. Due to the increased steam load for which the control systems are unable to compensate, the primary average temperature will slowly decrease. The control rods will step outward in an attempt to maintain nominal primary system average temperature. However, due to the decreasing primary temperature, a decreasing primary pressure will occur. An increase in reactor power will occur with the increase in steam flow. This increase in power could initiate a high flux reactor trip. It is expected that the operating crew will attempt to decrease load to first stabilize power and then to shut down the unit. If, with the turbine ramped to minimum load, reactor power remains above the P-9 setpoint of 35% power, tripping the turbine will result in a reactor trip. If power is less than 35% power, then tripping the turbine will not result in an automatic reactor trip. The crew should discuss the transient that will follow the turbine trip and ensure all team members understand the actions that they are to perform to help mitigate the accident. Actions might include the following:

- Performing EEP-0 immediate actions
- Performing AOP-3.0 actions following turbine trip < P-9
- Checking steam flow following turbine trip and closing ALL main steam isolation valves (MSIVs) if steam flow is still present
- With ALL MSIVs closed, checking steam flow to determine if the break is isolated. If steam flow has stopped, then the break is isolated downstream of the MSIVs, and ESP-0.1 actions will stabilize the unit. If steam flow exists on any SG, then the break has been identified upstream of the MSIVs on the SG with steam flow, and SI is required
- Manually tripping the reactor and safety injecting if a fault is identified as unisolable

If action is not taken by the crew, then the intermediate size break will more than likely result in the low steam line pressure setpoint or the low pressurizer pressure setpoint being reached. In either case, an SI signal and a reactor trip signal are generated. This results in an automatic turbine trip, feedwater isolation, steam line isolation, and AFW initiation. If the break occurs upstream of the MSIVs, the SG associated with the faulted loop will blow down to atmospheric pressure. If the break occurs downstream of the steam line isolation valves, the transient is terminated following MSIV closure. The emergency response procedure (ERP) key

indications used to identify a faulted SG are an uncontrolled pressure decrease in at least one steam line or an SG that is completely depressurized. A completely depressurized SG for a faulted SG inside CTMT may indicate as high as 50 psig the expected CTMT pressure for this event. Other symptoms would include uncontrolled steam flow, increased main feed flow to at least one SG, slowly decreasing primary average temperature, and slowly decreasing SG water level in at least one SG.

Refer to Figures 4 and 5. Some of the key plant parameters that are most affected by an intermediate steam line break are shown in Figures 4 and 5. In this sample transient, loop 1 was the faulted loop, and loop 2 represented the intact loops. (In the Emergency Event Procedures [EEPs], "faulted" is a specific term used to indicate a failed pressure boundary other than the SG tubes. "Ruptured" is the term used only for the SG tubes.) The break shown was large enough to cause primary system temperature to slowly decrease until a reactor trip and subsequent turbine trip occurred due to an overpower delta temperature condition at 23 seconds (see Figure 4). The RCS pressure continued to decrease (see Figure 5) and SI initiated at 55 seconds. Due to the decreasing primary temperature and pressure, the pressurizer level dropped rapidly and eventually emptied. Steam generator pressure decreased in all loops initially until steam line isolation occurred at 56 seconds due to low steam line pressure. The SG associated with the faulted loop blew down to atmospheric pressure and was dry at approximately 10 minutes.

For an intermediate feed line break in which the control systems are incapable of compensating for the loss of flow, the secondary side would experience a slowly decreasing SG water level in at least one SG. Depending on the size of the break, a slowly increasing primary average temperature before the reactor trip may occur due to the loss of main feedwater and degraded SG heat transfer. This is one of the few differences between a feed line break and a steam line break. The transient is eventually terminated by manual reactor trip or SG low-low level. SG low-low level results in a reactor trip and AFW initiation. A subsequent turbine trip occurs due to reactor trip. If the break occurs downstream of the main feed line check valves, all SGs continue to experience a reverse blowdown through the SG associated with the faulted loop: Feedwater and steam mass from the faulted generator are blown back through the broken feed line to the atmosphere. Because all of the SGs are connected via the steam line header, the other SGs will supply steam to the faulted SG. The faulted SG will blow down this steam through the

42. 055EA2.03 001/1/1/BLACKOUT/C/A 3.9/4.7/NEW/FA011005/RO/

There is a Station Blackout in progress for Unit 1. The 2C DG is being started for Unit 1 IAW ECP-0.0, Loss Of All A.C. Power. Which one of the following describes the actions that will need to be taken or will automatically occur to ensure 2C DG is running properly with service water supplied after the start pushbutton is depressed?

A. • Check DJ06, Unit 1 2C DG output breaker, automatically closes.
• Close DG13, 1G 4160 V bus tie to 1J 4160 V bus.
• Manually start two service water pumps on B Train.

B. • Close DJ06, Unit 1 2C DG output breaker, from the EPB.
• Close DG13, 1G 4160 V bus tie to 1J 4160 V bus.
• Manually start two service water pumps on B Train.

C. • Check DJ06, Unit 1 2C DG output breaker, automatically closes.
• The LOSP sequencer will automatically run.
• All LOSP loads will automatically start.

D. • Close DJ06, Unit 1 2C DG output breaker, from the EPB.
• The LOSP sequencer will automatically run.
• All LOSP loads will automatically start.

A. Incorrect - DJ06 will auto close, however, DG13 will auto close and the SW pumps will auto start since there is no SI.

B. Incorrect - DJ06 will auto close, and the LOSP sequencer will run and start all loads.

C. Correct - **Check DJ06, Unit 1 2C DG output breaker, automatically closes, the LOSP sequencer will automatically run, and all LOSP loads will start.**
The Unit I output breaker **(DJ06-1) will close automatically when the 2C diesel is running at rated voltage and frequency, and it was manually started from the EPB in mode 1 with the USS in the Unit I position.** Also, an undervoltage condition must exist on the 1J bus, and the 1B diesel output breaker must be open.
Load shed of bus loads must be completed prior to closing the output breaker for any diesel generator. When the output breaker for the 2C DG is closed, then the LOSP sequencer on 4160V G *should run if no SI Signal is present*. This will load the 2C diesel from the G sequencer, in which case the operator needs to carefully monitor the loading on the diesel so that it will not exceed the continuous load rating of the diesel (2850 kW). If a safety injection signal is present, then the operator is reminded that neither the LOSP or the SI sequencer will run and the SI loads must be manually started.

D. Incorrect- DJ06 will auto close.

055EA2.03 Station Blackout- Ability to determine and interpret the following as they apply to a Station Blackout : actions necessary to restore power.

State the basis for all cautions, notes, and actions associated with ECP-0.0/0.1/02 (OPS52532A03)
Describe the sequence of major actions associated with ECP-0.0/0.1/02. (OPS52532A04)

subsequent steps. Each time a step energizes, a white lamp lights to indicate sequencer progress. A green lamp (LOSP MANUAL LOAD START) lights at the completion of the sixth step if all steps were energized. This lamp provides indication that all six steps received the proper signal and that additional loads may be started safely. A red lamp (LOSP INCOMPLETE SEQUENCE) lights at the completion of the sixth step if all steps did not energize, indicating that a malfunction has occurred. The lamps lock in and must be reset by depressing the lamp reset push button located beneath each light display.

At the completion of the sixth step, the sequencer signal feeds back to block the sequencer run signal. Blocking the run signal removes the close signal from the breakers on each step and returns the sequencer to a standby condition. This allows manual operation of all LOSP loads.

During an LOSP, bus 1J will normally be supplied emergency power from diesel generator 1B. With diesel generator 1B breaker (DG08-1) closed, the diesel generator 2C output breaker (DJ06-1) will be blocked from closing.

DG 2C Output Breaker (DJ06) Logic

Because the 2C diesel is the SBO diesel, its output breaker (Figure 20) controls are different from the emergency diesel breaker controls.

The Unit I output breaker (DJ06-1) will close automatically when the 2C diesel is running at rated voltage and frequency, and it was manually started from the EPB in mode 1 with the USS in the Unit I position. Also, an undervoltage condition must exist on the 1J bus, and the 1B diesel output breaker must be open.

The Unit II output breaker (DJ06-2) operates the same as the Unit I output breaker. To manually close DJ06-1 from the EPB, 2C diesel must be operating in mode 2. To start the diesel in mode 2, the USS must be in the TEST position.

B1J and B2J Sequencer Logic

Normally, an UV condition on 4160V bus 1J or 2J will generate a load shed signal. The load shed signal for the B1J sequencer will trip river water pumps 4 and 5. The load shed signal

If no emergency bus can be loaded on any DG for whatever reason (no excitation, breaker won't close, etc.), then the RNO column will direct the operator to attempt to load an emergency bus from an off-site power supply while continuing efforts to start one diesel generator.

If an emergency bus (4160V bus F or G) has been restored with electrical power from a DG, then the power supply should be sufficiently stable to accept automatic sequencing of loss of off-site power (LOSP) or SI loads on the emergency bus without detrimental effects. In this case, the operator will verify Service Water (SW) pumps are running with adequate SW flow to DGs being delivered and then will be directed to procedure and step in effect (EEP-0 in all likelihood).

A caution applies any time a diesel is started to help to ensure the running diesel is provided immediately with service water (SW) for cooling to protect it from overheating. If the DG cannot be provided with sufficient cooling water, then it should be secured until SW is available to be provided to the running DG.

Load shed of bus loads must be completed prior to closing the output breaker for any diesel generator. When the output breaker for the 2C DG is closed, then the LOSP sequencer on 4160V G should run if no SI Signal is present . This will load the 2C diesel from the G sequencer, in which case the operator needs to carefully monitor the loading on the diesel so that it will not exceed the continuous load rating of the diesel (2850 kW). If a safety injection signal is present, then the operator is reminded that neither the LOSP or the SI sequencer will run and the SI loads must be manually started.

Because of the increased capacity that is available from the big diesels (4075 kW versus 2850 kW), the operator should attempt to start one of them first. Also, the big diesels can be emergency started by one of two methods locally per SOP-38.1.

Any attempted start of a diesel generator that has automatically tripped should be performed locally in Mode 4. This note reminds the operator that if the local mode selector switch (located on the diesel local control panel) is placed in MODE 4 position, then the diesel cannot be controlled from the EPB. To return control to the operator in the control room, then the local control switch must be placed in the OFF position.

Failure to perform steps to shutdown a DG that is running without adequate SW immediately may result in restart of the diesel generator when the low speed relay de-energizes. If the diesel generator is supplying power to the emergency bus and does not have SW cooling being supplied to it, then the diesel generator must be rapidly shutdown. This rapid shutdown should

prevent diesel engine failure, if the shutdown occurs within 3 minutes of diesel engine being started. The immediacy of these steps is to prevent a subsequent restart of the diesel generator after the DG Stop pushbutton has been depressed.

The LOSP sequencer may run when the output breaker is closed. The LOSP sequencer should run when output breaker closes, if no SI signal is present. If a SI signal is present, neither sequencer will run and SI loads must be started manually.

Caution. If both Unit 1 and Unit 2 B Train 4160V busses become de-energized, then make one attempt per unit to restore power to at least one unit's B Train 4160V bus by starting the designated B Train DG. If power cannot be restored using either 1B or 2B DGs, then immediately align and start the SBO DG to provide power to one unit's B Train 4160V bus.

Caution. When energizing any dead bus from a startup transformer, the SYNCH BYPASS switch must be held in the BYPASS position when closing the associated startup transformer output breaker. Closing the alternate output breaker from a startup transformer may cause safety related AC power to be cross-connected.

Recovery Actions

At this point in the procedure, all attempts to restore AC power to an emergency bus from any source (DGs or off-site) have failed. With no AC power available to any emergency bus, plant conditions will begin to deteriorate due to RCP seal leakage. Actions should now be initiated to minimize the deterioration of the plant conditions. Actions will be taken to prevent auto start of emergency loads, reduce DC loads, and isolate the RCP seals. Because of the changes made to various equipment and system lineups that are going to be completed in subsequent steps, the operator must proceed to an appropriate recovery procedure whenever AC power is restored.

When the point of the procedure has been reached when power to any bus cannot be restored, the step will direct the operator to proceed in the procedure to verify SW flow and a flowpath to the DGs available when power is restored to any emergency bus. The procedure will then direct the operator to perform the necessary actions to restore plant equipment to a "normal" configuration needed for recovery following a loss of all AC power.

Whenever a SI signal is present, the operator is directed to reset the SI signal so that SI equipment (i.e., pumps and valves) will not automatically actuate upon AC power restoration. This will permit manual loading of equipment as directed following restoration of power to the

Step	Action/Expected Response	Response NOT Obtained

****

CAUTION: A running diesel generator will overheat if adequate SW flow is not provided within 3 minutes. Steps 5.3 through 5.7 must be performed immediately to verify adequate SW flow once a diesel generator has been started.

****

NOTE: Load shed of bus loads must be completed prior to closing the output breaker for any diesel generator.

5.2 Check 1-2A, 1C or 1B diesel generator running for Unit 1.

- Check DIESEL SPEED indication - GREATER THAN 0 rpm.

OR

- Check FREQUENCY METER indication - GREATER THAN 58 Hz.

OR

- Check DIESEL AT SYN SPEED light - LIT.

5.2 Perform 2C DG SBO start as follows.

5.2.1 Verify 2C DG MODE SELECTOR switch in MODE 1.

5.2.2 Place 2C DG UNIT SELECTOR switch in UNIT 1.

5.2.3 WHEN load shed verified, THEN depress 2C DG DIESEL START pushbutton.

5.2.4 Verify 2C DG starts.

NOTE: The LOSP sequencer should run when output breaker closes, if no SI signal is present. If an SI signal is present, neither sequencer will run and SI loads must be started manually.

5.2.5 Verify Unit 1 2C DG output breaker DJ06 closes.

5.2.6 Verify breaker DG13 closed. (1G 4160 V bus tie to 1J 4160 V BUS)

Step 5 continued on next page.

Step	Action/Expected Response	Response NOT Obtained
		5.2.7 Verify breaker DG02 closed. (1G 4160 V bus tie to 1L 4160 V bus) 5.2.8 IF 1G 4160V bus energized, THEN proceed to step 5.7.
NOTE:	• Starting 1-2A or 1B diesel generator should be attempted first. • Any attempted start of a diesel generator which has automatically tripped should be performed locally in Mode 4.	
		5.2.9 WHEN load shed verified, THEN start any diesel generator. 5.2.9.1 Start diesel generator from EPB in Mode 2 using START pushbutton. OR 5.2.9.2 Direct diesel operator to start diesel generator in MODE 4 using FNP-0-SOP-38.1, EMERGENCY STARTING OF A DIESEL GENERATOR. OR 5.2.9.3 Direct diesel operator to perform a manual emergency start of 1-2A or 1B diesel generator using FNP-0-SOP-38.1, EMERGENCY STARTING OF A DIESEL GENERATOR. OR 5.2.9.4 IF attempts to start a diesel generator fail, THEN proceed to step 5.9.

Step 5 continued on next page.

___Page Completed

Step	Action/Expected Response	Response NOT Obtained
		5.5.7 IF 1F 4160 V bus energized, THEN proceed to step 5.7.
5.6	Check 1G 4160 V bus - ENERGIZED.	5.6 IF 2C DG available for SBO start, THEN perform 2C DG SBO start as follows, IF NOT, proceed to step 5.8
		5.6.1 Verify 2C DG MODE SELECTOR SWITCH in MODE 1.
		5.6.2 Place 2C DG UNIT SELECTOR SWITCH in UNIT 1.
		5.6.3 WHEN load shed verified, THEN depress 2C DG DIESEL START pushbutton.
		5.6.4 Verify 2C DG starts.

NOTE: The LOSP sequencer should run when output breaker closes, if no SI signal is present. If an SI signal is present, neither sequencer will run and SI loads must be started manually.

		5.6.5 Verify UNIT 1 2C DG output BKR DJ06 closes.
		5.6.6 Verify BKR DG13 closed. (1G 4160 V bus tie to 1J 4160 V bus)
		5.6.7 Verify breaker DG02 closed. (1G 4160 V bus tie to 1L 4160 V bus)
		5.6.8 Monitor 2C diesel generator load, voltage and frequency.

Step 5 continued on next page.

___Page Completed

43. 056AK3.01 001/1/1/SEQUENCER/MEM 3.5/3.9/NEW/FA011005/RO/

Concerning the HHSI pumps during a Loss of Off-Site Power (LOSP), which one of the following indicates the sequencer step when the HHSI pumps will be running from the start of the accident and the reason?

A. At step 1; to allow time for DG start, MOV alignment and supplying flow to the RCS within 22 seconds.

B. At step 6; to allow time for Load shed, bus alignment, DG start and supplying flow to the RCS within 55 seconds.

C. At step 4; to allow time for DG start, MOV alignment and sequential loading of the HHSI pumps within 27.4 seconds.

D. At step 2 and 3; to allow time for Load shed, bus alignment and load starting current to decay within 48.6 seconds.

A. Correct - **At step 1; to allow time for DG start, MOV alignment and supplying flow to the RCS within 22 seconds.**
Step 1 of the ESF and LOSP sequencers start the HHSI Pumps. given a DG start of 12 sec and loading of 5 sec intervals, at 25 sec steps 1 and 2 should have occured.
OPS-52103F- DG sequencer lesson plan
1. The SI system is required to begin supplying injection flow to the reactor coolant system within 22 seconds from the moment the accident occurs. To accomplish this, the charging pumps must be assigned to step 1 of the load sequencers. This allows time for the diesel generator to start and the motor-operated valves to open, leaving a small margin for the generation of the SI.

B. Incorrect - Step 6 is wrong and the reason and time is that given for CS flow.

C. Incorrect - Step 4 is wrong and the reason and time is for the Ctmt coolers.

D. Incorrect - Step 2 and 3 is taken from the SW pumps being split up and the time is incorrect and the reason is that given for the 5 sec intervals between loading the steps.

2. Containment spray is required to deliver flow to the spray nozzles within 55 seconds from the generation of the containment spray actuation signal. To accomplish this, the containment spray pumps must be assigned to step 2 of the load sequencers. An LOSP is assumed to occur coincident with the generation of the containment spray actuation signal, so that time must be allowed for the diesel generator to start, the motor-operated valves to open, and flow to be delivered to the spray nozzles. A small time margin is incorporated to account for the closure of the pump breakers and any inaccuracies of the assumed times.
3. Containment coolers are required to start within 27.4 seconds following an LOSP. However, the service water pumps must be running prior to starting the containment coolers. The service water pumps have been assigned to step 3, and the containment coolers have been assigned to step 4 of the load sequencers. The sequencer step in which the containment fan coolers must be started is determined by a load sequence time interval of five seconds between any two subsequent steps, diesel start time, fan cooler breaker closure time, and fan acceleration time.

056AK3.01 Loss of Offsite Power - Knowledge of the reasons for the following responses as they apply to the Loss of Offsite Power:
order and time to initiation of the power for the load sequencer.

Discuss the operation and alignment of each major component including precautions and limitations of operation, and applicable procedures, associated with the Diesel Generator Sequencers System including (OPS40102D11):
• B1F and B2F ESS/LOSP Sequencer
• B1G and B2G ESS/LOSP Sequencer

Evaluate abnormal plant or equipment conditions associated with the Containment Structure and Isolation System and determine the integrated plant actions needed to mitigate the consequence of the abnormality (OPS552102A02).

DG SEQ-40102D07 #30

event of an LOSP and/or SI, the diesels are automatically started and become available to supply power to the emergency buses.

Prior to aligning the diesel generators to the emergency buses, the diesel generator sequencers send a signal to trip the circuit breakers of the large pump motors and nonessential bus loads. If these circuit breakers were not opened prior to aligning the diesel to the bus, a large amount of electrical load would instantaneously be placed on the diesel generator. The load shedding of the buses, prior to generator alignment, prevents the generator output voltage and frequency from dropping below minimum requirements.

The diesel generator and sequencer design assumes the worst case situation--an SI on one unit with an LOSP on both units. This design is very conservative since the probability of a simultaneous dual unit SI is very low.

Either the LOSP or SI results in a reactor trip on that unit. The electrical load requirements for safely shutting down a reactor after an LOSP are considerably less than the electrical load requirements for a unit with an LOSP concurrent with an SI. Consequently, the unit with the SI will have the higher priority for emergency electrical power.

The diesel generator sequencers utilize logic memory circuits to determine and remember which unit has the highest priority. The diesel generator sequencers then assign the swing diesel generator outputs accordingly to re-energize the emergency buses. The swing diesels (1-2A and 1C) each have two output breakers so that they may be used to supply their associated buses on either unit. The dedicated diesels (1B and 2B) each have one output breaker and may only supply their associated bus on their designated unit.

Following the re-energization of the buses from the diesel generators, the sequencers start equipment that is supplied from the emergency buses. The essential loads controlled by the sequencers have been arranged into two load groups, each having six steps. Each loading step is energized by the diesel generator in a predetermined sequence. The time interval between each step (approximately five seconds) is sufficient to allow the load starting current (five to seven times normal load current) to decay before proceeding with the next sequential load step. Allowing the starting current to decay ensures that the emergency bus's voltage and frequency remain above design requirements.

The first load group, the ESS sequencer group, will be restored whenever an SIAS occurs. This load group consists of loads supplied from buses F, G, K, and L. The ESS sequencer receives input from the memory circuit. If an SI exists and off-site power is available to the emergency buses, the ESS sequencer will start all ESS loads at one time. If off-site power is not available, the ESS sequencer will start the ESS loads sequentially.

The second load group, the LOSP sequencer group, will be restarted sequentially whenever an LOSP condition exists without an SI. The little diesel (1C) river water sequencers also may be considered as LOSP sequencers. The river water sequencers start the 1C diesel generator and re-energize its associated emergency bus, making power available to start river water pumps manually, as needed, to maintain service water pond level. No river water pumps are sequenced automatically by the sequencers.

The ESS and LOSP loads are divided between the two emergency bus trains for each unit in a balanced and redundant manner. Due to the load arrangement, only one train per unit needs to be operable to supply the loads required for the safe shutdown of the unit. The following chart denotes the loads started on each step for both an ESS and LOSP sequencer signal:

Step	ESS Sequencer Loads	LOSP Sequencer Loads
1	Charging pump	Charging pump Rx cavity cooling fan
2	RHR pump, CTMT spray pump	Service water pump, CRDM cooler fan
3	Service water pumps	Service water pump
4	CCW pump, CTMT cooler	CCW pump, CTMT cooler
5	MDAFW pump, Rx cavity H2 dilution fan	MDAFW pump
6	Battery charger Air compressor	Battery charger Air compressor

closing signal ensures sufficient time for proper closing action of the breakers, thus providing the required electrical power to the preselected ESS loads in a timely manner.

During an accident with an LOSP, each loading step will be energized by the diesel generator in a predetermined sequence. Variable timers determine the time interval between each step. The timer setpoints were chosen with two major considerations involved. The first consideration deals with maintaining the diesel generator frequency and voltage within tolerance. The second consideration involves the starting of the various engineered safety features within required safety analysis response time values.

When starting a large electrical load on the diesel generator, the diesel generator's speed will drop, causing the initial emergency bus frequency and voltage to drop. The time intervals between each step must be sufficient to allow the starting current to decay before proceeding with the next step. The diesel generator frequency and voltage should not decrease to less than 95 percent of nominal frequency (57 Hz) and 75 percent of nominal voltage (3120 volts AC). In addition, the diesel generator should be restored to within two percent of nominal frequency (58.8 Hz) and 10 percent of nominal voltage (3745 volts AC) within two seconds of a sequence action.

The required response time values of the various emergency safety features are based on the accident analysis of the plant for the design based accident and the diesel generator capability. The particular sequencer step chosen for each emergency safety feature load was determined with the above in mind and with the following basic considerations:

1. The SI system is required to begin supplying injection flow to the reactor coolant system within 22 seconds from the moment the accident occurs. To accomplish this, the charging pumps must be assigned to step 1 of the load sequencers. This allows time for the diesel generator to start and the motor-operated valves to open, leaving a small margin for the generation of the SI.
2. Containment spray is required to deliver flow to the spray nozzles within 55 seconds from the generation of the containment spray actuation signal. To accomplish this, the containment spray pumps must be assigned to step 2 of the load sequencers. An LOSP is assumed to occur coincident with the generation of the containment spray actuation signal, so that time must be allowed for the diesel generator to start, the

motor-operated valves to open, and flow to be delivered to the spray nozzles. A small time margin is incorporated to account for the closure of the pump breakers and any inaccuracies of the assumed times.

3. Containment coolers are required to start within 27.4 seconds following an LOSP. However, the service water pumps must be running prior to starting the containment coolers. The service water pumps have been assigned to step 3, and the containment coolers have been assigned to step 4 of the load sequencers. The sequencer step in which the containment fan coolers must be started is determined by a load sequence time interval of five seconds between any two subsequent steps, diesel start time, fan cooler breaker closure time, and fan acceleration time.

These considerations, together with the diesel generator frequency and voltage requirements, led to the selection of the load sequence time interval of five seconds. Evaluation of the load sequencers and the diesel starting time indicates that neither a diesel generator starting time of 12 seconds nor the load sequence time interval of five seconds can be increased without exceeding the required response time values of the various engineered safety features and the diesel generator capability.

LOSP Load Sequencers

If off-site power becomes unavailable, a reactor trip will occur. The loads required to safely shut down the unit after a reactor trip will be started in a predetermined sequence by the big diesel LOSP sequencers. The loads have been divided into six steps, with five-second time intervals between steps. The time intervals are based on the diesel generator capabilities. If an SI is received subsequent to an LOSP condition, the LOSP sequencer will stop where it is, and the ESS sequencer will start at step one to run those ESF loads not already started by the LOSP sequencer. This could lead to an emergency diesel generator being above its continuous load rating because all the LOSP and ESS loads will be running. The major ESS loads that would not already be running would be the RHR pumps and, possibly, containment spray pumps.

STOP push button. This description of manual operation is the same for all diesel generator output breakers.

The diesel generator output breaker will trip under certain circumstances, regardless of the position of either the MSS or the Mode 4 selector switch. Either a diesel generator or bus differential will trip the breaker and lock out the breaker (86 relay). If the 1B diesel receives an essential trip (or non-essential engine trip with no auto-start signal present), the output breaker will trip. If either of the normal supply breakers (DG01-1 or DG15-1) is closed and a train B SIAS exists, a signal will trip the diesel generator output breaker to isolate the diesel from the off-site power source. Three UF relays on bus 1G actuate at 57 hertz. If any two of the three relays actuate, the diesel generator output breaker will trip if either of the normal bus 1G supply breakers is closed.

The 1B and 2B diesel generator output breakers operate identically; therefore, 2B will not be discussed. Any questions concerning the 2B diesel generator output breaker may be answered using the 1B output breaker logic and explanation.

B1G LOSP Sequencer Logic

The following explanation assumes positioning of the mode selector switch in either the MODE 1 or MODE 2 position. It further assumes that the Mode 4 selector switch is in OFF. For functional explanation of the LOSP sequencer operation (Figure 12) with switch positions other than those assumed, drawings D-177032 and D-207032 should be referenced. The B1G and B2G LOSP sequencers are similar.

An LOSP signal will be generated any time the bus 1G normal supply breakers from the startup transformer (DG01-1 and DG15-1) trip, no SI B train signal exists, and the 1B diesel generator output breaker is not closed. Once generated, the signal will exist as long as the startup transformer supply breakers remain open, and no SI appears. After a two-second time delay and the closing of the 1B diesel generator output breaker, the LOSP signal will cause the sequencer to run.

When the B1G sequencer runs, the required LOSP loads start sequentially. The breakers for the loads on step 1 close with no time delay. Five seconds after step 1 becomes energized, the breakers for the loads on step 2 close. An additional five-second time delay exists between

subsequent steps. Each time a step energizes, a white lamp lights to indicate sequencer progress. A green lamp (LOSP MANUAL LOAD START) lights at the completion of the sixth step if all steps were energized. This lamp provides indication that all six steps received the proper signal and that additional loads may be started safely. A red lamp (LOSP INCOMPLETE SEQUENCE) lights at the completion of the sixth step if all steps did not energize, indicating that a malfunction has occurred. The lamps lock in and must be reset by depressing the lamp reset push button located beneath each light display.

At the completion of the sixth step, the sequencer signal feeds back to block the sequencer run signal. Blocking the run signal removes the close signal from the breakers on each step and returns the sequencer to a standby condition. This allows manual operation of all LOSP loads.

During an LOSP, bus 1J will normally be supplied emergency power from diesel generator 1B. With diesel generator 1B breaker (DG08-1) closed, the diesel generator 2C output breaker (DJ06-1) will be blocked from closing.

DG 2C Output Breaker (DJ06) Logic

Because the 2C diesel is the SBO diesel, its output breaker (Figure 20) controls are different from the emergency diesel breaker controls.

The Unit I output breaker (DJ06-1) will close automatically when the 2C diesel is running at rated voltage and frequency, and it was manually started from the EPB in mode 1 with the USS in the Unit I position. Also, an undervoltage condition must exist on the 1J bus, and the 1B diesel output breaker must be open.

The Unit II output breaker (DJ06-2) operates the same as the Unit I output breaker. To manually close DJ06-1 from the EPB, 2C diesel must be operating in mode 2. To start the diesel in mode 2, the USS must be in the TEST position.

B1J and B2J Sequencer Logic

Normally, an UV condition on 4160V bus 1J or 2J will generate a load shed signal. The load shed signal for the B1J sequencer will trip river water pumps 4 and 5. The load shed signal

44. 057G2.4.31 001/1/1/LOSS OF 120VAC BUS/C/A 3.3/3.4/NEW/FA011005/RO/CVR

Unit 1 is at 100% power.

- WD1, 1A INV FAULT, comes into alarm.
- N-41 is de-energized.
- 1A INVERTER EPB ammeter reads 0 amps.
- Local 1A INVERTER indications are:
  - BATTERY INPUT BKR tripped
  - INVERTER OUTPUT BKR closed
  - Bypass Source Powering Load light NOT lit
  - BYPASS SOURCE AVAILABLE light lit

Which one of the following is the correct action to take with1A Inverter in order to re-energize vital loads per ARP-2.2, WD1?

A. Push the BYPASS SOURCE TO LOAD pushbutton.

B. The STATIC TRANSFER switch must be repaired prior to re-energizing vital loads.

C. Transfer the MANUAL BYPASS switch to the BYPASS SOURCE TO LOAD position.

D. The electrical fault which caused the DC input breaker to trip must be repaired prior to re-energizing vital loads.

A. Incorrect. Even though this button would be pushed under normal conditions with the inverter powering the load, in this condition there would be no "In sync" light lit, and the "out of sync" light would be lit. This would prevent operation of the push button. Additionally, the push button operates the static transfer switch which has already demonstrated that it is not functioning. The ARP thus directs the manual Bypass switch to be operated to bypass both the inverter and the static bypass switch in this condition.

B. Incorrect. Even though the static transfer switch needs repair, it does not have to be repaired prior to energizing the 120VAC vital loads.

C. Correct. Transfer the MANUAL BYPASS switch to the BYPASS SOURCE TO LOAD position. The indications show a DC problem with the Input breaker being tripped. No AC problem is indicated since the AC output breaker is still closed. The reason the vital AC Loads are deenergized is that the static bypass switch did not work to transfer the power source from the deen. inverter to the energized bypass source. The ARP, for this condition, directs switching the MANUAL BYPASS switch to the BYPASS SOURCE TO LOAD position as long as the "BYPASS SOURCE AVAILABLE" light is lit.

D. Incorrect. Even though the electrical fault needs repair, it does not have to be repaired prior to energizing the 120VAC vital loads. The indications and basic construction of the inverter indicate a DC fault that is electrically isolated from the AC output. The ARP in this condition gives direction to switch the MANUAL BYPASS switch to the BYPASS SOURCE TO LOAD position

LOCATION WD1
IMMEDIATE ACTION
1. IF 120 VAC VITAL INSTRUMENTATION PANEL 1A IS DE-ENERGIZED, THEN ATTEMPT TO RESTORE POWER TO THE BYPASS SOURCE BY PERFORMING THE FOLLOWING:
A. IF THE "BYPASS SOURCE AVAILABLE" LAMP IS ILLUMINATED ON THE INVERTER, THEN TRANSFER 1A INVERTER MANUAL BYPASS SWITCH TO THE "BYPASS SOURCE TO LOAD" POSITION.

APE: 057 Loss of Vital AC Electrical Instrument Bus

2.4 Emergency Procedures /Plan

2.4.31 **Knowledge of annunciators alarms and indications, and use of the response instructions.** (CFR: 41.10 / 45.3) RO 3.3

2. Evaluate abnormal plant or equipment conditions associated with the 120 Volt AC Distribution System and determine the integrated plant actions needed to mitigate the consequence of the abnormality (OPS52103D02).

LOCATION WD1

D1
1A INV FAULT

SETPOINT:
1. Battery near exhaustion 107V DC.
2. Inverter output undervoltage 108V AC

ORIGIN:
1. Battery near exhaustion X7 Voltage sense board
2. Inverter current limit A3 Ammerter Relay
3. Inverter output undervoltage K3 Relay via X8 voltage sense board
4. Inverter overheating X10 relay board
5. Out of sync X12 relay board
6. Fan failure
7. Bypass source supplying load

PROBABLE CAUSE

1. Bypass source carrying load.
2. Inverter out of sync with bypass supply.

AUTOMATIC ACTION

1. IF DC input voltage drops to 103 V DC, THEN inverter transfers to bypass source.
2. IF inverter fails, THEN the bypass source should carry the load.
3. An inverter fault when the bypass source is not available resulting in a loss of power to 1A 120 VAC Vital Instrument Panel will be indicated by the following:

   A. Source Range Channel 31 will be de-energized.

CAUTION: Outward rod motion is blocked by the High Power Rod Stop Bistable being tripped.

   B. NI-41 will be de-energized with associated alarms and indications.

   C. Annunciators FD3, FD4, DF1 and DK3 will alarm.

   D. No amperage indication on 1A Inverter ammeter.

OPERATOR ACTION

1. IF 1A 120 VAC VITAL INSTRUMENT PANEL is de-energized, THEN immediately perform the following:

   A. IF a reactor trip occurs, THEN refer to FNP-1-EEP-0, REACTOR TRIP OR SAFETY INJECTION.

   B. Attempt to restore power from the bypass source by performing the following:

      1. IF the "BYPASS SOURCE AVAILABLE" lamp is illuminated on the inverter, THEN transfer 1A INVERTER MANUAL BYPASS SWITCH to the "BYPASS SOURCE TO LOAD" position.

      2. IF the "BYPASS SOURCE AVAILABLE" lamp is NOT illuminated on the inverter, THEN perform the following:

         - Verify 1A MCC Energized
         - Verify Closed Q1R17BKRFAF5L Supply to 1G 208V/120V REGULATED AC DISTRIBUTION PANEL
         - Verify closed Breaker #8 IN 1G REGULATED AC DISTRIBUTION PANEL
         - Transfer 1A INVERTER MANUAL BYPASS SWITCH to the BYPASS SOURCE TO LOAD position.

2. Notify appropriate personnel to determine the cause and correct.

NOTE: The following controls are affected if 1A 120 VAC Vital Instrument Panel is De-energized:

- **A TRN SSPS output relay power is lost.**
- **VCT Hi Lvl Divert Valve - Q1E21LCV115A diverts to the RHT if in auto.**
- **LTDN Hi Temp Divert Valve - Q1E21TCV143 bypasses the demineralizers.**
- **1A & 1B Reactor makeup water pumps start.**
- **1A & 1B BAT pumps start.**
- **RMW to Blender - Q1E21FCV114B and Boric Acid to blender - Q1E21FCV113A opens if Rx M/U Control System is in auto.**
- **If LT 112 VCT level is out of service, RWST to Chg Pump Suction Valves - Q1E21LCV115B & D open.**
- **The auto functions associated with LT460 pressurizer level are disabled.**
- **Annunciator KG4, TURB TV closed alert, will be in alarm and bistable TSLB2, 14-1 will be lit.**
- **Annunciator KH5, TURB Auto/Stop oil press low, will be in alarm and bistable TSLB2, 13-1 will be lit.**

OPERATOR ACTION cont'd

NOTE: Per Table 3 of FNP-0-ACP-52.1, Guidelines for Scheduling of On-Line Maintenance, A, B, C, D or F Inverters on bypass source are considered to be unavailable due to being status A1 for the Maintenance Rule. This unavailability should be logged for tracking purposes.

2. Refer to Technical Specification 3.8.9 and 3.8.10.

3. IF 1A 120 VAC VITAL INSTRUMENT PANEL was de-energized, THEN perform the following when it is re-energized:

   A. Verify proper operation of Pressurizer level control and heaters.

   B. Reset hi flux rate trip signals on NI-41 and verify proper operation of NI-41, if necessary.

   C. Realign CVCS to normal per FNP-1-SOP-2.1, CVCS PLANT STARTUP AND OPERATIONS.

   D. Realign Reactor Makeup Control System to normal per FNP-1-SOP-2.3, CVCS REACTOR MAKEUP CONTROL SYSTEM.

   E. Stop unnecessary Reactor Makeup Water and BAT pumps.

   F. Verify all other MCB controls and indications have returned to normal.

4. Verify control systems outside the control room have returned to normal.

5. WHEN the cause of the fault has been determined AND corrected, THEN return 1A Inverter to service.

{CMT 0009705} {CMT 0005094} applies to entire annunciator

References: D-177024; U-279610; PCN B87-1-2899; D-177218, Sh. 2; D-177214; {CMT 0009705} {CMT 0005094}

3.9 208/120V regulated AC distribution panel 1G and 1H are each supplied by a constant voltage transformer consisting of three separate devices called isolimeters--one per phase. The loss of an isolimeter only affects the loads in the distribution cabinet that are powered off of the phase supplied by that isolimeter. Drawing D-181599, sh. 3, shows the relationship of the load in each cabinet to the isolimeters.

3.10 120V regulated AC distribution cabinet 1A and 1B are supplied with three phase AC from 208/120V regulated AC distribution panel 1G and 1H. Therefore step 3.9 also applies to 120V regulated AC distribution cabinet 1A and 1B. Drawings D-181599, sh. 3, D-177024, and D-177025 shows the relationship of the loads in each cabinet to the isolimeters.

3.11 Operation of the120V AC instrumentation inverters without batteries connected to the DC bus should be minimized. Transient AC input conditions to the 125V Battery Chargers can lead to fluctuations in the DC input to the inverters, causing the inverter fuses to blow.

4.0 Instruction

4.1 120V AC instrumentation inverter 1A (B, C, D, F, G) operation.

4.1.1 Placing 120V AC instrumentation inverter 1A (B, C, D, F, G) in service.

4.1.1.1 Verify the BATTERY INPUT breaker OPEN.

4.1.1.2 Verify the INVERTER OUTPUT breaker OPEN.

4.1.1.3 Verify closed respective inverter bypass AC supply breaker as follows:

INVERTER	AC SUPPLY BREAKER
	120V AC Distribution:
1A	Panel 1G Brk #8
1B	Panel 1G Brk #5
1C	Panel 1H Brk #7
1D	Panel 1H Brk #2
1F	Panel 1G Brk #1
1G	Panel 1H Brk #6

4.1.1.4 Close respective inverter DC supply breaker as follows:

INVERTER	DC SUPPLY BREAKER	
1A	LA	10
1B	LA	12
1C	LB	04
1D	LB	06
1F	LA	16
1G	LB	10

NOTE: At startup an audible alarm will be heard.

4.1.1.5 Close the BATTERY INPUT breaker.

4.1.1.6 Close the INVERTER OUTPUT breaker.

4.1.1.7 Verify that the inverter is in sync with the bypass source as indicated by IN SYNC lamp lit and OUT OF SYNC lamp not lit.

CAUTION: Do not transfer unless unit is in sync.

NOTE: In the following step, the FAN FAILURE light will go out (if illuminated) and the BYPASS SOURCE AVAILABLE light will illuminate (if not already on).

4.1.1.8 Transfer the MANUAL BYPASS Switch to the NORMAL OPERATION position.

4.1.1.9 Press the INVERTER TO LOAD pushbutton.

4.1.2 Removing 120V AC instrumentation inverter 1A (B, C, D, F, G) from service.

4.1.2.1 Verify the BYPASS SOURCE AVAILABLE lamp lit.

4.1.2.2 Verify that the bypass source is in sync with the inverter as indicated by the IN SYNC lamp lit and the OUT OF SYNC lamp not lit.

CAUTION: Do not transfer unless unit is in sync.

4.1.2.3 Press the BYPASS SOURCE TO LOAD pushbutton.

NOTE: In the following step, the FAN FAILURE light will illuminate and the BYPASS SOURCE AVAILABLE light will go out.

4.1.2.4 Transfer the manual bypass switch to the BYPASS SOURCE TO LOAD position.

4.1.2.5 Open the following breakers for respective inverter.

- BATTERY INPUT breaker
- INVERTER OUTPUT breaker

4.1.2.6 Open respective inverter DC supply breaker as follows:

INVERTER	DC SUPPLY BREAKER	
1A	LA	10
1B	LA	12
1C	LB	04
1D	LB	06
1F	LA	16
1G	LB	10

INDICATING LIGHTS

A. BATTERY NEAR EXHAUSTION

B. INVERTER CURRENT LIMIT

C. INVERTER POWERING LOAD

D. IN SYNC

E. BYPASS SOURCE POWERING LOAD

F. FAN FAILURE

G. INVERTER OVERHEATING

H. INVERTER OUTPUT UNDERVOLTAGE

I. OUT OF SYNC

J. BYPASS SOURCE AVAILABLE

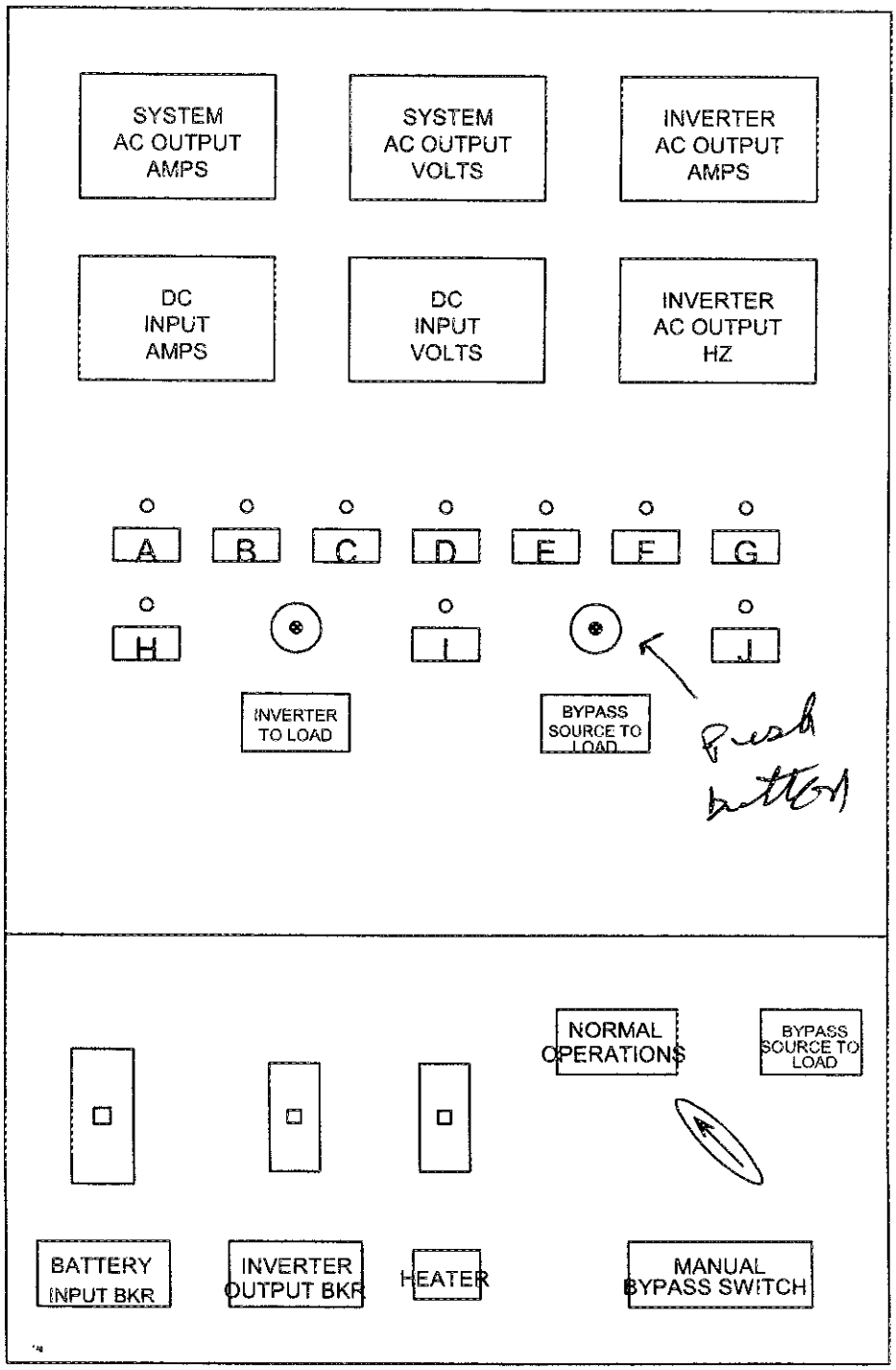

120V AC Instrument Inverter

Figure 6

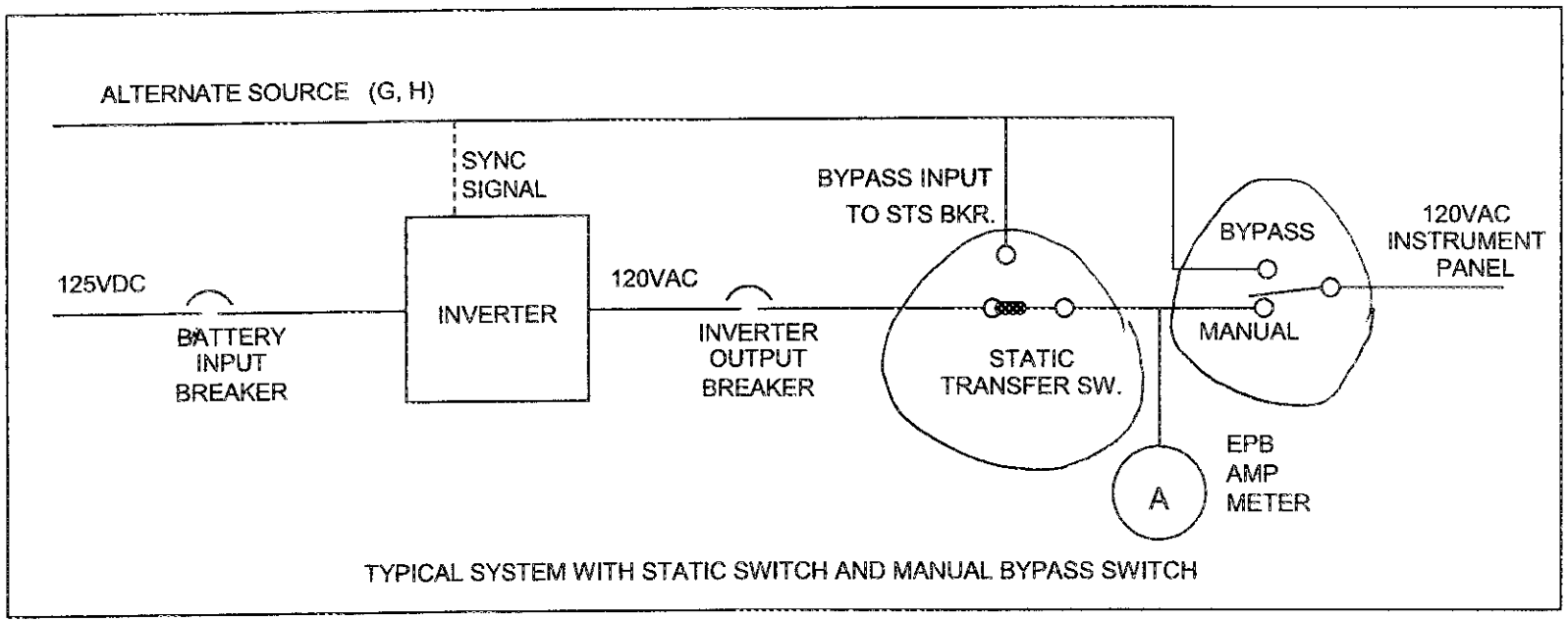

120 VAC Instrument Inverter

Figure 7

120 Volt Vital AC Instrumentation Distribution System

The 120V vital AC instrumentation distribution system, shown in Figures 1 and 2 for each unit, consists of four redundant 120V vital AC instrumentation distribution panels (A, B, C, and D). These panels supply uninterruptible power for essential instrumentation and control loads under all operating conditions.

Each panel receives 120V AC power from its own separate static inverter. The inverters receive normal power from a vital 125V DC bus. Should the normal supply fail, the inverter static transfer switch will function to supply the vital AC instrumentation distribution panels from an alternate source. When the normal power supply returns, the inverter controls must be manually operated for the static transfer switch to swap output back to the inverter. This alternate power source is a 600V vital motor control center (MCC) via a 208/120V regulated AC distribution panel. The static inverter also has a manual bypass switch that allows the operator to select the regulated AC source to supply the vital AC instrumentation distribution panel.

The design of the static inverters assures that the transfer between power sources does not interrupt the 120V AC power to the vital AC instrumentation distribution panels. The inverter unit with its static transfer switch and a constant voltage transformer (CVT) as an alternate power source forms a complete Class 1E uninterruptible power source.

208/120 Volt Regulated AC Distribution System

The 208/120 volt regulated AC distribution system shown in Figures 1 and 2 is comprised of two 208/120V regulated AC distribution panels. The two 208/120V regulated AC distribution panels (G and H) are the alternate power supply for the vital AC instrumentation distribution panels. 208/120V Regulated AC Distribution panels G and H receive regulated power from two 45 KVA constant voltage transformers (CVTs). The CVTs for the 208/120V regulated AC panels receive power from an emergency 600V MCC.

208/120 Volt Regulated AC Instrumentation Distribution System

The 208/120 volt regulated AC instrumentation distribution system shown in Figures 1 and 2 is comprised of two 208/120V regulated AC instrumentation panels. 208/120V Regulated AC instrumentation panels (A and B) receive power from 208/120V regulated AC distribution panels G and H.

DETAILED DESCRIPTION

120 Volt Vital AC Instrumentation Distribution System Power Supplies

The 120V vital AC instrumentation distribution system shown in Figure 2 consists of four panels: A, B, C, and D (120V vital AC instrumentation distribution panels). Each panel is normally supplied from a 7.5 KVA static inverter. The static inverters have been designed specifically to supply an uninterruptible source of AC power.

The normal supply to the static inverters is from 125V DC bus A for inverters A and B, and 125V DC bus B for inverters C and D. Emergency 600V MCC A is the alternate supply for inverters A and B via the A CVT and 208/120V regulated AC distribution panel G, while emergency 600V MCC B is the alternate supply for inverters C and D via the B CVT and 208/120V regulated AC distribution panel H.

Each 125V DC bus normally receives power from one of two battery chargers, with a bumpless emergency supply from a 125V DC battery. The 125V DC bus A receives power from either battery charger A, C, or 125V DC battery A. The 125V DC bus B receives power from either battery charger B, C, or 125V DC battery B. The three battery chargers and two batteries are located in the Aux Building non-rad side on the 121' elevation.

If a static inverter fails a 208/120V regulated AC distribution panel serves as the alternate supply to each 120V vital AC instrumentation panel. The 208/120V regulated AC distribution panel G supplies 120V vital AC instrumentation distribution panels A and B, while 208/120V regulated AC distribution panel H supplies 120V vital AC instrumentation distribution panels C and D.

The transfer to the alternate supply, for an inverter fault, is performed automatically by the static transfer switch on each inverter. The operator, using the manual bypass switch located on each inverter, can also align the alternate supply. Inverter load amps are indicated in the control room on the EPB. If the manual bypass switch is used to select alternate power, the control room indication is lost.

The four 120V vital AC instrumentation distribution panels are color coded as follows:

Vital Panel A - Yellow

Vital Panel B - Green

Vital Panel C - Orange

DEHC Uninterruptible Power Supplies

(Figures 15A and 15B)

The DEHC system is powered from DEHC inverter H, which selects either the normal DC supply or the AC bypass supply. Upon loss of the DC supply, the inverter's static transfer switch (STS) switches to the AC bypass supply. The AC bypass supply has a line conditioner to protect the DEHC system from voltage spikes and transients when the DEHC is powered from the AC bypass source. The AC bypass power feed to the DEHC inverter is from 120/208 VAC cabinet 1U(2GG). The normal power feed to the DEHC inverter is from 250V DC cabinet "L."

The primary power feed to the DEHC cabinets is from the H inverter, either from the 250V DC supply or the AC bypass source. The DEHC cabinets also have a secondary power feed to them; this power feed is from AC distribution cabinet GG (MCC 2BB) via a line conditioner. The primary and secondary power feed to the DEHC cabinets are both aligned continuously.

OPERATIONS

Instrument Inverters

(Figures 6 and 7)

The 7.5 KVA static inverters (A, B, C, D, E, and F) convert DC power from their respective 125V DC bus to 120V, single phase, AC power. The DC power is supplied through the battery input breaker. The output of the inverter goes through the inverter output breaker to the static transfer switch. The static transfer switch is a solid state device that provides a bumpless transfer of power, to the load, from the inverter to the alternate source in the event the output from the inverter fails. The alternate source for inverters A, B, and F (C, D, and G) is 208/120V regulated AC distribution panel G (H). 208/120V regulated AC distribution panel G (H) is supplied by the A (B) CVT which receives power from 600V MCC A (B).

In the inverter is a special circuit that samples the alternate source and adjusts the inverter's output to be in synch with the alternate source. This ensures the inverter's output is not paralleled out of phase with the alternate source when a transfer by the static transfer switch occurs.

When the output of the inverter returns to a normal condition, the inverter output can be manually realigned to supply the load by depressing the "INVERTER TO LOAD" push button.

An indicating light will illuminate when the transfer is complete. If the static transfer switch were to fail, it would fail to the alternate source supplying the load.

To allow maintenance on the inverter, without a loss of power to the load, a make-before-break manual bypass switch is used.

The following two conditions will result in an INVERTER FAULT alarm on the EPB:

1. Low DC input voltage (battery near exhaustion)
2. Low AC output voltage (inverter output undervoltage)

If the DC input voltage drops to 103V DC, the static transfer switch will operate to supply the load from the alternate source. If the DC input voltage rises to 145V DC, the DC input breaker will open and the load will shift to the alternate source.

The inverter instrumentation and controls are mounted on the inverter cabinet front. Each inverter provides meter indication for system AC output volts and amps, DC input volts and amps, inverter AC output amps, and inverter AC output frequency.

The controls for the inverter consist of the following:

1. Inverter to load push button; depressing this push button causes the static transfer switch to supply the load from the inverter.
2. Bypass source to load; depressing this push button causes the static transfer switch to supply the load from the alternate source (regulated panel G or H).
3. Battery input breaker; closing this breaker connects the battery bus to the inverter. Breaker will open if input voltage exceeds 145V DC.
4. Inverter output breaker; connects the AC output of the inverter to the static transfer switch.
5. Heater circuit breaker; normally open, used to prevent condensation during periods when the inverter is deenergized.
6. Manual bypass switch; used to manually transfer the load to the alternate source.

INVERTER INDICATING LIGHTS

Amber	Red
Inverter power load	Battery near exhaustion
Bypass source available	Inverter output undervoltage
In synch	Inverter current limit
	Out of synch
	Bypass source powering load
	Fan failure
	Inverter overheating

Constant Voltage Transformers (CVTs)

(Figure 2)

Each 45 KVA, Class 1E, 3 phase CVT consists of three 15 KVA, single phase units that transform the unregulated incoming 600V AC power into regulated 120V AC power. CVTs are sometimes referred to as isolimiters. CVTs A and B supply 208/120V regulated AC distribution panels G and H, respectively. 208/120V regulated AC distribution panels G and H supply regulated AC instrument panels A and B as well as providing an alternate power source for the instrument inverters. Each of the single phase units provides front panel indication of AC output volts and amps. A red indicating light denotes fan failure.

Safety Parameter Display System Computer Uninterruptible Power Supply

(Figure 11 and 19)

The SPDS UPS consists of a battery charger, a static inverter with a static transfer switch, and a battery. The battery charger is powered from 600V LC 1P for Unit One and 600V LC 2Q for Unit Two. It is designed to provide 100 percent of the static inverter needs plus charge the battery from a fully discharged condition to a fully charged condition in eight hours.

The batteries are normally maintained in the fully charged state by a float charge from the battery charger. The batteries are sized to provide a minimum of 2 hours of operation with a full load on the static inverter.

The 30 KVA static inverter (Figure 11) converts DC power from the batteries or battery charger to 208/120V, 3 phase AC power. The DC power is supplied through a DC input breaker.

A precharge push button is in parallel with the DC input breaker and is used for initial

45. 058AK1.01 001/1/1/DC/MEM 2.8/3.1*/BANK-N/FA011005/RO/SDR

A loss of Aux. Building DC power has occurred due to a Station Blackout event that has lasted for 3 hours. Offsite power has finally been restored and the lineups complete for restoring the battery charging lineup.

Which ONE of the following describes the operational implications of the Aux. Building 125 volt DC System?

A. The battery chargers will be unable to carry steady state normal or emergency loads until its associated battery has been fully charged.

B. The battery chargers will be unable to carry steady state normal or emergency loads until its associated battery is charged for at least 2 hours.

C. The battery chargers will be immediately able to carry steady state normal or emergency loads while its associated battery is being charged.

D. The battery chargers will be immediately able to carry steady state normal loads but unable to carry emergency loads until its associated battery has been fully charged.

A - Incorrect; Each battery charger is designed to provide adequate capacity to restore its associated battery to full charge in 12 hours after the battery has been fully discharged, while carrying steady state normal or emergency loads.

B - Incorrect; Each battery charger is designed to provide adequate capacity to restore its associated battery to full charge in 12 hours after the battery has been fully discharged, while carrying steady state normal or emergency loads

C - Correct - **The battery chargers will be immediately able to carry steady state normal or emergency loads while its associated battery is being charged and will not be fully charged for 12 hours.**
Each battery charger is designed to provide adequate capacity to restore its associated battery to full charge in 12 hours after the battery has been fully discharged, while carrying steady state normal or emergency loads. OPS-52103C lesson plan page 4 and 6 and 13.

D - Incorrect; Each battery charger is designed to provide adequate capacity to restore its associated battery to full charge in 12 hours after the battery has been fully discharged, while carrying steady state normal or emergency loads

058AK1.01 Knowledge of the operational implications of the following concepts as they apply to Loss of DC Power: Battery charger equipment and Instrumentation

Explain the purpose and operation including the design features and functions, capacities, and protective interlocks of the following major component associated with the DC Distribution System (OPS40204E02):
•Batteries
•Battery Chargers
•The auxiliary building 125V DC distribution system

DC DIST-40204E02 #19
2003 NRC exam - only question available

The turbine building batteries and battery chargers operation is similar to the auxiliary building system; however, the ratings differ. The design rated capacity for batteries C and D is 1500 amp-hrs based on an eight hour discharge to a limit of 1.75 volts per cell. The maximum capacity of the battery chargers is 400 amps. A battery charger fault annunciates on the MCB (TURB BLDG DC SYS TRBL).

The service water battery charger maximum capacity is 3 amps. The FSAR, Section 8.3.2.1.1.2 defines the Service Water Battery Load profile requirements. The Service Water Building safety-related station batteries are sized in accordance with Section 6 of IEEE-485-1983 for operation at a minimum electrolyte temperature of 35°F and including an aging factor of 25 percent. The batteries have a capacity of 75 amp-hours based on an 8-hour discharge rate to 1.75 volts per cell. The battery load primarily includes switchgear controls and indication. Each battery has adequate storage capacity to carry its load without charger support for a period of at least 2 hours.

Battery terminal voltage shall remain greater than or equal to 105 volts and ICVs should remain greater or equal to 1.75 volts when the batteries are subjected to a service test with the load profile below which envelops the load requirements under all conditions.

Time	Load
0 to 1 minute	30 Amps
1 to 120 minutes	3 Amps

Test voltage listed above are greater than the minimum required design voltage and provide acceptable margin to support future design load additions or variations. In the event post-test terminal voltages are lower, comparison of actual values to minimum acceptable design voltages is required to determine whether the battery is capable of satisfactorily supplying design loads. In addition, all Individual Cell Voltages (ICVs) at the end of the test should be greater than or equal to 1.75 volts. While overall battery terminal voltage may be acceptable, single (or multiple) ICVs of less than 1.75 volts are indicative of degraded cell(s) that must be evaluated for corrective action or potential replacement. Operation of both battery chargers and batteries is

drops below 90 percent of rated voltage. If power to the DC bus the ATS is selected to is lost, the ATS will switch to the DC bus on the unaffected unit. If power to the affected unit's DC bus is restored, the ATS will not automatically switch back to it. FNP-0-SOP-38.0, DIESEL GENERATORS, describes the operation of the 1-2A and 2C ATSs.

Bus A also feeds distribution panels A, B, and C, while bus B supplies panels D, E, and F. The three DC distribution panels connected to each DC bus supply safety-related loads as indicated in the power supply and load tables.

Reliability of the DC system is assured during normal operation by energizing all battery chargers and by maintaining a constant voltage. Consequently, the battery chargers supply the batteries with sufficient current to keep them fully charged to maintain the DC loads. In case of an LOSP, the batteries supply the required DC and vital AC equipment. When AC power is regained from the diesel generators, any battery charger that was on service prior to the LOSP is re-energized by either the LOSP or the engineered safety features (ESF) sequencer and normal operation is resumed.

Under normal conditions, the batteries are sized to supply safety-related and non-safety-related loads without support from the battery chargers for two hours. The two hour duration is based on the time required for the operators to align the spare battery charger to the affected train. During this two hour period, the non-affected train of DC power is operable and available for accident mitigation if required. During the design basis accident (LOSP or LOSP and LOCA), the batteries shall be capable of carrying the DC loads necessary to support accident mitigation for a minimum of the 40 second period from the LOSP until the battery charger is reenergized from the emergency diesel generator. The battery charger design provides adequate capacity to restore its battery to full charge within 12 hours after a two hour discharge while simultaneously supplying the steady state normal or emergency loads.

Turbine Building DC Distribution System

(Figure 4)

The turbine building DC distribution system for each unit consists of two 125V batteries, three 125V battery chargers, four 125V DC distribution panels, and a 250V DC distribution panel. Two of the 125V DC distribution panels are located in the auxiliary building and supply

same time. The switchhouse distribution panels supply power to local instrumentation and provide control power for switchyard circuit breaker operation.

DETAILED DESCRIPTION

Auxiliary Building 125V DC Distribution System

(Figure 3)

The auxiliary building 125V DC distribution system for each unit consists of two 125V DC distribution buses, three 125V DC battery chargers, two 125V DC batteries, and six DC distribution panels. Each 125V DC bus receives power from one of the battery chargers with one battery floating on the bus. The 125V DC system is ungrounded and has ground indicating lights on the emergency power board (EPB).

The 125V DC bus A normally receives power from battery charger A with an emergency source from battery A. Bus A also has an alternate source of power from battery charger C--the swing battery charger--that can be used to supply either bus A or B. Battery charger C is key-interlocked to prevent paralleling the redundant DC buses or the AC buses through the battery charger and to prevent cross-connecting trains.

Bus B normally receives power from battery charger B, with battery B as an emergency source.

Battery charger A receives AC power from 600V LC D, and battery charger B receives power from 600V LC E. Battery charger C may be supplied from either 600V LC D or E.

In the unlikely event that a battery charger fails, the swing battery charger is manually placed in service. During the changeover to the spare battery charger, the battery for that bus carries the load.

Each battery charger is designed to provide adequate capacity to restore its associated battery to full charge in 12 hours after the battery has been fully discharged, while carrying steady state normal or emergency loads.

The two batteries used in the auxiliary building 125V DC system contain 60 lead-calcium cells electrically connected in series to establish a nominal 125V DC power supply. Each cell is sealed and assembled in a shock absorbing, clear plastic container with its cover securely attached. The batteries are mounted on corrosion resistant racks.

059A3.02 001/2/1/MFW/C/A 2.9/3.1/NEW/FA011005/RO/

Unit 2 is at 85% reactor power and stable, holding for chemistry with the following conditions:

- Rod control is in MANUAL.
- All other systems are in automatic.

A 200 MW load rejection occurs. Which one of the following describes initial SG water level response and then the final SG water level, **assuming no operator action** is taken?

A. Decreases, then returns to original level.

B. Increases, then returns to original level.

C. Increases, then stabilizes at a level lower than the original level.

D. Decreases, then stabilizes at a level lower than the original level.

A.Correct -**Decreases, then returns to original level.**
This event has several things that need to be taken into account. First, rod control is in manual, then steam dumps are in auto and lastly there is no operator action. When the load rejection occurs, Steam Flow drops significantly and FF > SF. SGWL will decrease approximately 10% due to shrink. The level decrease causes FRV position to increase and SGFP speed then to increase. As the shrink effect goes away and more feed causes level to increase FRV position will close and SGFP speed will decrease. Since there is no auto rod control and steam dumps open to take up the 200 MW load rejection, there is no overall change at the end of the transient.

The opposite effect will be observed in the steam generator when the power level is decreased. The lower heat transfer rate along with the higher steam pressure causes less boiling to occur and a contraction of the steam bubbles present. This decreases the steam-to-water ratio with a subsequent increase in density. Since the mass in the steam generator is initially constant, the increase in density will be seen as a decrease in steam generator water level. This phenomenon has been termed "shrink."

B. Incorrect - SGWL does not increase to start with, instead it shrinks.

C. Incorrect- SGWL does not increase to start with, instead it shrinks. The program level is constant for the SGWL control but does control lower for the Przr LCS for the power level.

D. Incorrect- First part is correct. The program level is constant for the SGWL control but does control lower for the Przr LCS for the power level.

059A3.02 Main Feedwater - Ability to monitor automatic operation of the MFW, including: Programmed levels of the S/G

Explain the purpose and operation including the design features and functions, capacities, and protective interlocks of the following major components associated with the Steam Generator Water Level Control System (OPS52201B02):

- Program DP for Feedwater Regulating Valves
- FRVs
- SGFPs

SHRINK AND SWELL

Shrink and swell are steam generator phenomena that are characterized by a change in water level following a change in steam flow. Shrink is a reduction in water level following a reduction in steam flow, while swell is just the opposite.

The rate of heat transfer across the tubes can be calculated using the following equation:

$$\dot{Q} = UA\,(T_{avg} - T_{stm}).$$

Where:

$$\dot{Q} = Rate\ of\ heat\ transfer, BTU\ /\ hr$$

$$U = Overall\ heat\ transfer\ coefficient, BTU\ /\ hr - ft^2 - {}^\circ F$$

$$A = Area\ of\ heat\ transfer\ surface, ft^2$$

$$T_{avg} = Avg.\,temperature\ of\ primary\ coolant = \frac{T_h + T_c}{2}$$

$$T_{stm} = Saturation\ temperature\ for\ the\ steam, {}^\circ F.$$

$\dot{Q}$ is proportional to the power level, or the energy being removed from the primary system to the steam generator. The heat transfer coefficient (U) remains relatively constant, and is determined by the composition and characteristics of the tubes. The area of heat transfer surface (A) is constant. If you have ever seen a pot of water boiling on a stove, you noticed that tiny bubbles of steam were formed at the hottest portions of the pot and then rose to the surface where they escaped as steam. The same thing takes place around each steam generator tube. The rate of heat transfer or the boiling rate bubbles being formed determined the quantity of the steam. A given boiling rate (power) water mixture will have a corresponding density and specific volume. Looking closely now at an increase in power level, the following events take place:

As steam flow to the main turbine is increased, more energy will be drawn from the steam generator, which tends to decrease the steam pressure. This decrease in steam pressure causes the number and size of the steam bubbles in the boiling region to

increase, which increases the steam to water ratio and specific volume, with a subsequent decrease in density. Initially, the mass of water in the steam generator remains constant, so the decrease in density will be seen as an increased steam generator water level. This phenomenon is known as "swell." The steam generator water level control system will decrease the water level to the operating band causing the mass in the generator to decrease as power level increases.

The opposite effect will be observed in the steam generator when the power level is decreased. The lower heat transfer rate along with the higher steam pressure causes less boiling to occur and a contraction of the steam bubbles present. This decreases the steam-to-water ratio with a subsequent increase in density. Since the mass in the steam generator is initially constant, the increase in density will be seen as a decrease in steam generator water level. This phenomenon has been termed "shrink."

CIRCULATION AND RECIRCULATION RATIO

The moisture that is removed from the steam prior to the steam leaving the steam generator enters the downcomer region where it mixes with the incoming feedwater. Since this separated moisture, upon reaching the riser region, is making its second pass across the heat exchanging U-tubes; this moisture content is called recirculation flow. This recirculation flow mixes with and preheats the incoming makeup feedwater flow. This total flow entering the tube bundle section of the steam generator is called circulation flow.

Circulation flow aids in maintaining proper thermal hydraulic performance (increased steam generator efficiency) and allows for control of the inventory of corrosion products, erosion products, and impurities (sludge) at the tube sheet, which is readily removed by the blowdown system.

Circulation ratio is a measure of the quantity of water entering the tube bundle region as compared to the total feedwater flow.

$$Circ\ Ratio = \frac{Mass\ Flow\ Rate\ Entering\ Tube\ Bundle\ Region}{Mass\ Flow\ Rate\ of\ Feed\ Water}\ (Recirc\ Flow\ +\ Feed\ Flow).$$

of the feed pump turbine. The programmed pressure difference (target value) increases as a function of total plant load. By varying the differential pressure (ΔP) across the feed regulating valves, the optimum valve position can be more closely achieved. This optimum position allows for a more responsive control system, and also reduces valve disc erosion due to excessive throttling.

Actual ΔP

A signal from a main steam header pressure instrument and the main feed pump discharge header pressure instrument combine to develop an actual differential pressure signal (ΔP). The process circuitry electronically subtracts steam pressure from feed pressure to develop this signal.

Programmed ΔP

Refer to Figure 7. The programmed pressure difference represents the target value for the difference in pressure (ΔP) between the steam header and the discharge of the feed pumps. This ΔP increases as a function of total plant load. A plant load signal (total steam flow), coupled with a no-load reference signal, is used to calculate the programmed ΔP signal. The plant load signal is determined by summing all three density-compensated steam flow signals. Two selectable channels on each steam generator provide each steam flow signal. The no-load setpoint, set in the control element, ensures a minimum or reference output level. The no-load setpoint is 50 psid for Unit I (43 psid for Unit II). The programmed ΔP for Unit I ranges linear from 28.1-percent to 100-percent power. The ΔP is 50 to 177.14 psi, respectively. The programmed ΔP for Unit II ranges linearly from 9.4-percent to 100-percent power. The ΔP is 43 to 182 psi, respectively.

Master Speed Controller

The master speed controller compares the actual ΔP with the programmed ΔP (target value). The resulting output, a speed signal, supplies the feed pump speed controllers when the master control M/A station is in AUTO. The output speed signal may be varied manually by the operator using the master control M/A station. The P+I controller ensures a speed signal is

available to the pumps when no error signal is present (i.e., difference in actual ΔP and programmed ΔP is zero).

Individual Speed Controllers (Slave Controllers)

The individual speed controllers (slaves) receive a signal from the master controller, which will vary the feed pump speed when the M/A station is in AUTO. The pump speed may be controlled manually by the operator using the associated M/A station. The speed controllers are proportional type controllers.

OPERATIONS

Instrumentation and Controls

Refer to Figure 8. The following discussion of the process control instrumentation associated with the main feedwater regulating valve control system will apply specifically to steam generator A. Table 1 lists instrument and channel numbers for all three steam generators. Figures 9 and 4 show the location of the steam and feed system instruments, respectively.

Main Flow Control (Figure 4)

Steam Pressure

Each steam generator has three associated pressure channels-one each in protection sets II, III, and IV. All three pressure channels provide protection. The channels in protection sets III (PT-475) and IV (PT-476) also provide control functions. This control function provides density compensation for the steam flow signal used for flow control. The range of this instrument is 0 to 1200 psig.

Steam Flow

Two detectors per steam generator measure the differential pressure across the flow restrictors in the outlet nozzle. The measured differential pressure increases in proportion to the square of the volume flow rate of steam leaving the steam generator. This makes it necessary to extract the square root of the differential pressure signal and to apply density compensation in proportion to steam pressure. The derived signal will be linearly proportional to the mass flow

that of the main feedwater regulating valve control. Valve position indication lights are located below each M/A station.

Operational Dynamics

The major control element in the bypass control system is the bypass flow controller. The same convention applies to input signal designations as established in the main flow control circuit.

Feed Pump Speed Control (Figures 12 and 13)

ΔP Program

A summing amplifier in the feed pump control system sums the compensated steam flow signals from each flow loop. Using a combination of gain and lower limit settings, the amplifier generates an output that is a function of total steam flow. The gain of the summing amplifier is 0.4. A lag function delays the ΔP program signal by 120 seconds to compensate for system dynamic effect and process noise. The output, which is sent to the master speed controller, is the voltage equivalent of the programmed feedwater/main steam ΔP. The lower limit is the no-load ΔP of 50 psi (43 psi-Unit II). This no-load ΔP setpoint ensures flow into the steam generators from the feed system. The ΔP program follows linearly from 28.1-percent to 100-percent (9.4 to 100%-Unit II) power (steam flow). The ΔP is 50 to 177.14 psi (43 to 182 psi-Unit II), respectively.

Actual ΔP

The steam header pressure (PT-464) downstream of the main steam isolation valves (MSIVs) and the feed pump common discharge header pressure (PT-508) provide inputs to a differential amplifier. This amplifier produces an output proportional to the main feed pressure minus main steam pressure. This amplifier signal provides an actual ΔP input to the master speed controller. (The actual ΔP signal is processed such that if the differential amplifier fails low, the master speed controller will still have a signal from the ΔP program to maintain feedwater pump speed.)

Discharge Header Pressure Controller (Master Controller)

The actual ΔP and the programmed ΔP signals are processed by the discharge header pressure controller and produce a control signal. The controller is a P+I type of controller. The integral portion of the controller ensures an output is maintained to provide the feed pumps with a speed signal. The master controller output supplies the controlling input to the individual pump speed controllers when their associated M/A stations are in AUTO.

FW Pump Discharge Header Pressure Manual/Auto Station (SK-509A)

This M/A setpoint station provides the control signal to the individual feed pump speed controllers in the MANUAL mode. In the AUTO mode, the master speed controller provides the control signal. The potentiometer is not connected to the circuit. In MANUAL control, an output of 0 percent corresponds to 3200 rpm.

Individual Speed Controllers

The individual speed controllers (proportional type controllers) provide the control signal to the individual feed pump electrohydraulic control (EHC) systems. The controllers respond automatically to an input from the master controller when their associated M/A stations are in AUTO. The output signal equates to 3200 to 5400 rpm.

Feedwater Pumps A and B Speed Manual/Auto Stations (SK-509B and C)

The master controller controls the individual controllers in the AUTO mode. In MANUAL control, the associated feed pump is controlled by an output from the M/A station. A 0-percent controller output corresponds to 3200 rpm, and 100 percent corresponds to 5400 rpm.

Operational Dynamics

The main control elements of the system include the differential amplifier, the master speed controller, and individual speed controllers. The same convention applies to input signal designations as previously established. During startup and shutdown, the feed pump speed control will automatically shift between the EHC electronic controller and the discharge header pressure controller. (See Figure 13.) Below 3200 rpm, the EHC electronic controller will control pump speed. Above 3200 rpm, the master controller, in conjunction with the slave

controllers, will control pump speed. A low auctioneering circuit determines which controller will govern pump speed. For example, during startup, the EHC system controller will be used to bring the feed pump up to 3200 rpm. At 3200 rpm, the low auctioneering circuit will shift control to the slave controllers. At this point, the EHC control signal will be increased to maximum, ensuring the slave controllers maintain control. The slave controllers will be used to control pump speed for the remainder of the startup.

As pointed out in the condensate and feedwater system procedure, SOP-21.0, the steam generator feed pump (SGFP) vibration may be excessive during operation at or near the critical speeds for the SGFP. Operation in these areas should be minimized as much as possible to prevent excessive wear on the pumps. Critical speed for the SGFP is 2300-2400 rpm, with a harmonic critical speed existing between 3600 and 3700 rpm.

PROCEDURES

SOP-21.0, Condensate and Feedwater System

This procedure provides initial conditions, precautions, limitations, and instructions for operating the condensate and feedwater system. Instructions include the following:

1. Condensate system startup
2. SGFP pre-start test
3. Feedwater system startup
4. Starting the second SGFP
5. Shutting down a SGFP during plant load reduction
6. Feedwater system shutdown
7. Condensate system shutdown
8. Removing feedwater heater from service and returning heaters to service
9. Filling the condensate storage tank
10. Isolating and restoring air to the main feed regulating valves
11. Isolating and restoring air to the main feed regulating bypass valves
12. Operation of the wet layup recirc filtration system (Unit I only)
13. Cleaning condensate pump and heater drain pump SW cooling strainers
14. Post trip cooldown of 6A and 6B FW heaters
15. Hotwell flush

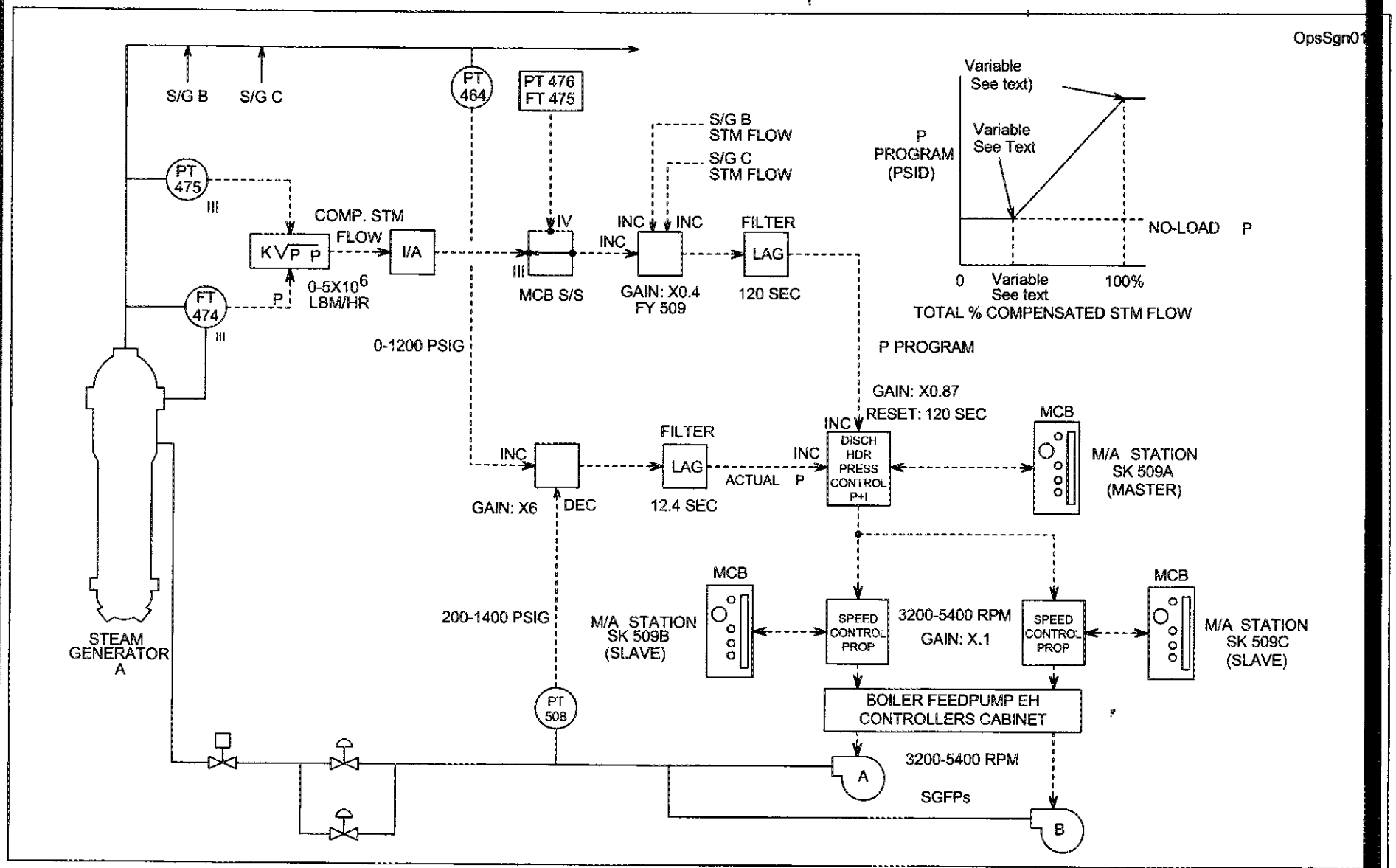

Steam Generator Water Level Control
Feed Pump Speed Control

Figure 12

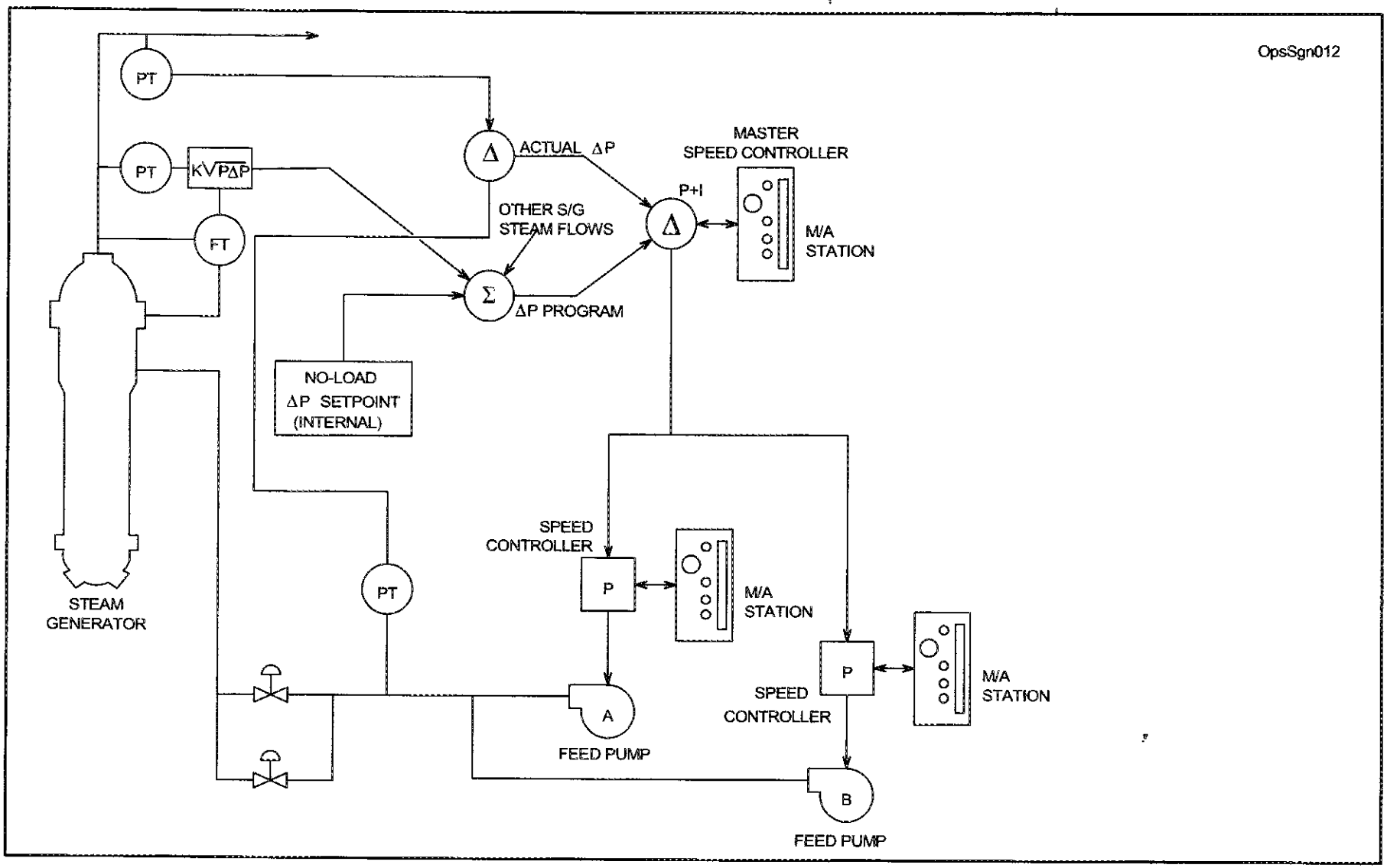

Steam Generator Water Level Control
Feed Pump Speed Control

Figure 7

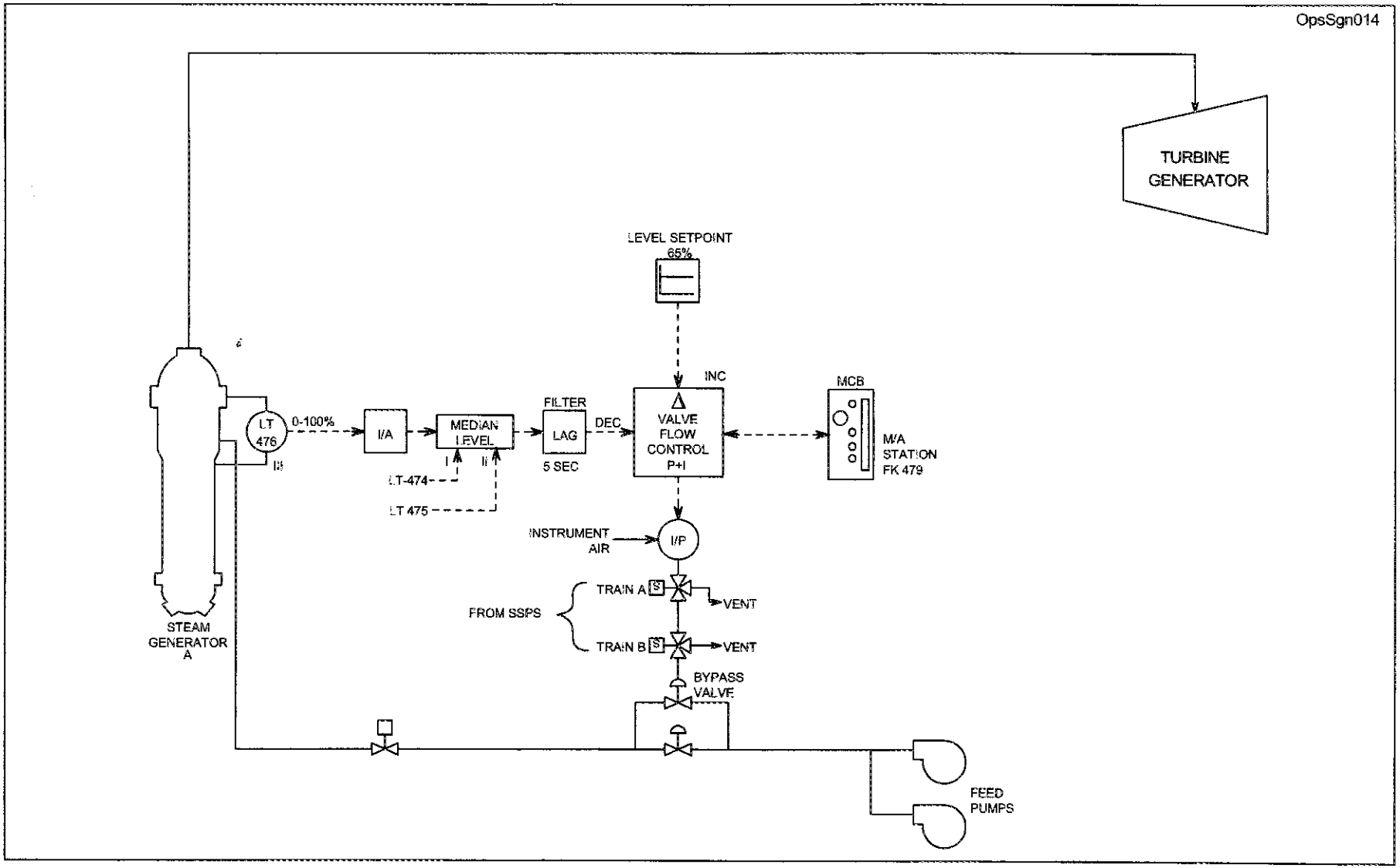

Steam Generator Water Level Control
Bypass Flow Control

Figure 6

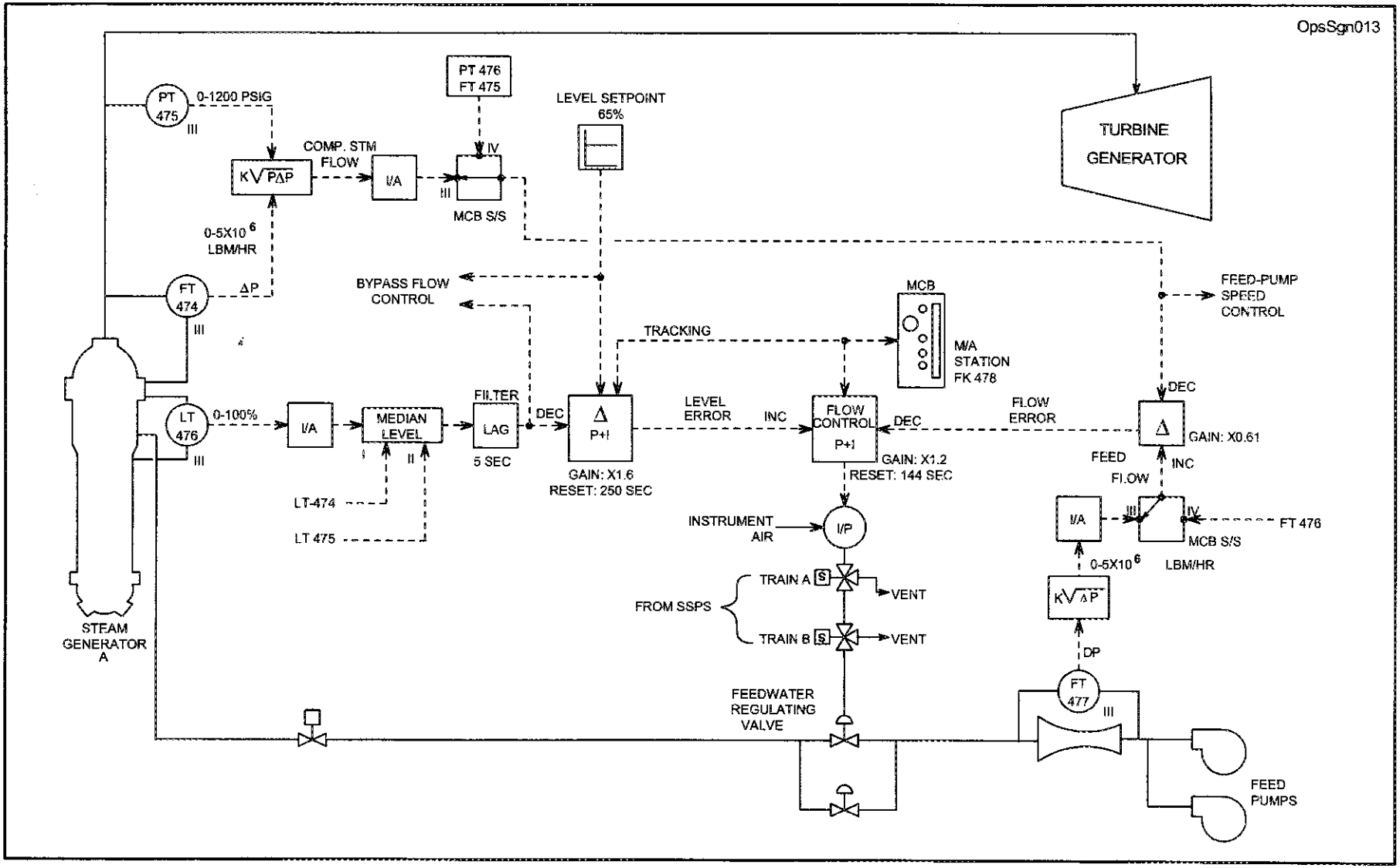

Steam Generator Water Level Control
Main Flow Control

Figure 4

47. 059AA2.05 001/1/2/R18/MEM 3.6/3.9/BANK/FA011005/RO/CVR

Given the following conditions on Unit 1:

- The plant is stable at 100% power.
- A Steam Generator Tube leak has occurred.
- Chemistry reports that RCS activity is elevated.

If SGBD Flow Control Valve, FCV-1152, fails to close, which one of the following radiation monitors will normally detect, alarm and automatically stop the accidental liquid radwaste release to the environment in progress?

A. R-23A, Steam Generator Blowdown Processing System Monitor.

B. R-23B, Steam Generator Blowdown Discharge Radiation Monitor.

C. R-19, Steam Generator Liquid Sample Monitor.

D. R-18, Waste Processing System Liquid Effluent Monitor.

A. Incorrect. This would normally shut FCV-1152 at the inlet of the SGBD surge tank, but FCV-1152 malfunctions and does not shut per stem.

B. Correct. **R-23B, Steam Generator Blowdown Discharge Radiation Monitor.** R-23B shuts RCV-23B at the outlet of the SGBD Surge tank which stops the release.

C. Incorrect. This isolates SGBD sample which isolates the contaminated water in the SG from the sample room.

D. Incorrect. This monitor isolates a Liquid Waste Release from either Waste monitor tank to the river, but does not isolate the SGBD release path.

APE: 059 Accidental Liquid Radwaste Release
AA1. Ability to operate and / or monitor the following as they apply to the Accidental Liquid Radwaste Release: (CFR 41.7 / 45.5 / 45.6)
AA2.05 The occurrence of automatic safety actions as a result of a high PRM system signal 3.6

2. Evaluate abnormal plant or equipment conditions associated with the radiation monitoring System and determine the integrated plant actions needed to mitigate the consequence of the abnormality (OPS52106D02).

RMS-40305A02 13

Steam Generator Blowdown Processing System Monitor (R-23A) (Figure 12)

The steam generator blowdown process radiation monitor (R-23A) continuously monitors the radioactivity level of the blowdown fluid entering the blowdown surge tank. This full-flow, in-line scintillation detector monitors large fluctuations in activity concentration due to variations in steam generator in-leakage conditions or to radioactive breakthrough of the system demineralizers. A high signal from this instrument sounds an alarm and stops blowdown by closing the system's process control isolation valve (FCV-1152).

Steam Generator Blowdown Discharge Radiation Monitor (R-23B)

This in-line detector continuously monitors the liquid activity level of the discharged or recycled fluid. It also provides the final radioactive control of the system's effluents. A high activity signal from this instrument sounds an alarm and closes the discharge valve to the river (RCV-23B) if it is open. Since it is downstream of R-23A, this instrument provides redundant protection against the discharge of excessive amounts of radioactivity. A separate, single-pen recorder is provided in the main control room.

Waste and Recycle Evaporator Condensate Recovery Units' Monitors (R-26A and B) (Figure 11)

This channel monitors the condensate returned from the waste evaporator (R-26B) and recycle evaporator feed preheater (R-26A) to their respective auxiliary steam generators in order to observe contaminated leakage in the electric steam generator condensate from the feed preheater.

Each off-line liquid monitor uses a scintillation detector. These monitors provide both meter and recorder indication in the main control room.

Victoreen Process and Effluent Monitors (Figures 12 and 13)

The Victoreen portion of the PERMS consists of two, dual-channel, off-line radiogas monitors (R-24A and B and R-25A and B). The monitors utilize a beta sensitive scintillation detector.

The Victoreen differs from the Westinghouse scintillator in four ways:

Scintillation detectors are located in in-line wells. A high radiation-level alarm signal initiates closure of the valve (RCV-3028) located in the component cooling surge tank vent line to prevent gaseous radiation release.

R-17A is monitoring "B" train CCW and R-17B is monitoring "A" train CCW.

Adequate lead shielding reduces the effect of background radiation so that it does not interfere with the detector's sensitivity.

Waste Processing System Liquid Effluent Monitor (R-18) (Figure 11)

This channel continuously monitors all waste processing system liquid releases from the plant. Automatic closure of RCV-18, which is initiated by this monitor, prevents further release after a high radiation level is indicated and alarmed. A scintillation detector in an in-line sample assembly monitors these effluent discharges. Remote indication and annunciation are provided on the liquid waste processing system control board. A separate, single-pen recorder is provided in the main control room.

Adequate lead shielding reduces the effect of background radiation so that it does not interfere with the detector's sensitivity.

Steam Generator Liquid Sample Monitor (R-19) (Figure 11)

This channel monitors the liquid phase of the secondary side of the steam generator for radioactivity that would indicate a primary-to-secondary system leak. This channel provides back-up information to that of the condenser air ejector gas monitor. Samples are taken from the bottom of each steam generator and combine in a common header, and a scintillation detector in an in-line sampler assembly continuously monitors the resulting sample.

Adequate lead shielding reduces the effect of background radiation so that it does not interfere with the detector's sensitivity.

Indication is displayed at the radiation monitoring system cabinets and at the monitor.

In the event of high activity, isolation valves (3328, 3329, and 3330) in the sample lines would close. Subsequent identification of the steam generator that is leaking would be made by manually overriding the sample line isolation signal and drawing samples from each steam generator for analysis.

48. 061A3.03 001/2/1/AFW/C/A 3.9/3.9/MOD/FA011005/RO/

The following events just occurred on Unit 1:

- The reactor tripped from 50% power due to the trip of the only operating SGFP.
- The TDAFW pump is tagged out.
- 1B SU transformer just tripped and 1B DG is tied to the 1G 4160 V Emergency bus.
- 1C SG water level is 44% NR and rising.
- 1A and 1B SG water levels are 25% NR and rising.
- A spurious safety injection has occurred on 'A' Train.
- The team is at step 7 of EEP-0, Reactor Trip or Safety Injection.

Light smoke has just been reported coming from 1B MDAFW pump. The Shift Supervisor has determined the pump must be stopped. Which one of the following are the **minimum** actions that would keep the 1B MDAFW pump secured and allow for control of the MDAFW pump Flow Control Valves (FCVs)?

A. Place the 1B MDAFW pump MCB handswitch to stop; Place the MDAFWP FCV 3227 RESET A TRAIN and B TRAIN handswitches to RESET and adjust the FCV controller.

B. Place the Local/Remote handswitch on the HSD panel for 1B MDAFW pump to LOCAL, Then place the 1B MDAFW pump MCB handswitch to stop; Adjust the MDAFWP FCV controllers.

C. Place the 'B' train AUTO/DEFEAT switch in DEFEAT, Wait for 2/3 SG water levels to rise above the Lo-Lo level setpoint, Then place the 1B MDAFW pump MCB handswitch to stop; Adjust the MDAFWP FCV controllers.

D. Reset the SI, Then place the 1B MDAFW pump MCB handswitch to stop; When 2/3 SG water levels rise above the Lo-Lo level setpoint, then place the 3227 RESET A TRAIN handswitch to RESETand adjust the FCV controller.

A. Correct - **Place the 1B MDAFW pump MCB handswitch to stop; Place the MDAFWP FCV 3227 RESET A TRAIN and B TRAIN handswitches to RESET and adjust the FCV controller.**
This is the minimum action required. Due to the B train LOSP and diesel running on that bus, the MDAFW pump can be secured at any time on the MCB regardless of autostart signals available. The MDAFWP FCVs can be reset by placing both trains HS's to RESET and adjusted from the pots at any time.

B. Incorrect - The HSD panel local/remote switch is not required to stop the pump and the pump will not stop from the MCB after the switch is in LOCAL, and the TDAFWP FCVs have to have the MDAFWP FCV 3227 RESET switches to RESET before the pot will control the valve.

C. Incorrect - Placing the AUTO/DEFEAT switches in DEFEAT is not necessary for this event and waiting for SGWL to increase above 28% normally would be required, but since the DG is carrying the load it is not necessary and the MDAFWP FCVs have to have the MDAFWP FCV 3227 RESET switches to RESET before the pot will control the valve.

D. Incorrect - Resetting the SI is not necessary to stop the MDAFWP and waiting for the SGWL to increase above the Lo-Lo level setpoint is not necessary, the MDAFWP FCV 3227 RESET switches both have to be reset not just one train.

061A3.03 Auxiliary/Emergency Feedwater - Ability to monitor automatic operation of the AFW, including: AFW S/G level control on automatic start

Explain the purpose and operation including design features and functions, capacities and protective interlocks of each major component associated with auxiliary feedwater (AFW) including (OPS-40201D02):
•Motor-driven auxiliary feedwater (MDAFW) pumps
• HV-3228A, B, C - TDAFW Pump Flow Control Valves

Describe the effect on the Auxiliary Feedwater of a loss of an AC or DC bus or instrument air (OPS-40201D06).

List the automatic actions associated with the auxiliary feedwater (AFW) system components and equipment during normal and abnormal operations including (OPS-40201D07).
• Normal Control Methods
• Automatic actuation including setpoints (examples - SI, Phase A, Phase B, MSLIAS, LOSP or SG level)

Predict and explain the following instrument/equipment response expected when performing auxiliary feedwater evolutions including the fail condition, alarms, trip setpoints (OPS-40201D08). This also includes:
• HV-3228A, B, C - TDAFW Pump Flow Control Valves

modified from AFW-40201D07 #35

Original question

QUESTIONS REPORT
for 1 HLT-29 EXAM

AFW-40201D07 035/HLT//C/A (LEVEL 2/3) SYS/061K4.02////

The following events just occurred on Unit 1:

- The reactor tripped from 50% power due to the trip of the only operating SGFP
- 1B SU transformer just tripped and 1B DG did not start
- All SG water levels are greater than 34% NR
- A spurious safety injection has occurred on 'A' Train

Smoke has just been reported coming from 1A MDAFW pump while the crew is at step 4 of EEP-0. The Shift Supervisor has determined the pump must be stopped. Which one of the following actions would keep the MDAFW pump stopped?

A. Place the 1A MDAFW start/stop handswitch on MCB to stop and release.

B. Reset SI, then place the 1A MDAFW pump MCB handswitch to stop.

C. Place the 'A' train AUTO/DEFEAT switch in DEFEAT and place the 1A MDAFW pump MCB handswitch to STOP.

D. The 1A MDAFW pump cannot be secured from the MCB. Operation at the HSD panel is required to secure the pump.

A. Incorrect - this will result in the MDAFW pump remaining to run
B. Incorrect - The SI signal remains for a short period of time (approx.2 sec) and then the MDAFW pump can be turned off
C. Correct - The MDAFW pump is running due to both SGFPs tripped and not in AUTO/DEFEAT
d. Incorrect - The pump can be secured from the MCB with some extra actions on the BOP

OPERATIONS

Instrumentation and Control (Figure 2, 5, 11, and 13)

MDAFW Pump Service Water Intake Valves (3209A and B)

A two-position, key-locked switch (CLOSE/OPEN) located on the BOP panel controls each valve. The lights located above each switch indicate valve position. These valves are located on the non-rad side, 100 foot elevation.

Service Water Intake Valves (3210A and B; 3216)

A three-position handswitch (CLOSE/Neutral/OPEN, spring return to Neutral) located on the BOP panel controls each motor-operated valve. Valve position indication lights may be found above each switch. An alarm sounds on the MCB when any one of these valves is not fully closed. These valves are located on the non-rad side, 100 foot elevation.

MDAFW Pump Control (Figure 5)

A three-position handswitch (STOP/AUTO/START, spring return to AUTO) on the MCB provides remote control for each MDAFW pump. A three-position handswitch (STOP/Neutral/START, spring return to Neutral) on the HSP provides local control for each pump. Selector switches (LOCAL/REMOTE) located on the HSP determines whether the remote or local controls are operable. The selector switch must be in the REMOTE position for the MCB switch and the auto-start features to be operable.

Placing the MCB switch in the START position will start the pump if the overcurrent protection circuit (86 relay) has not actuated. In the AUTO position on the MCB, the pump will automatically start on one of the following, if the overcurrent protection circuit (86 relay) has not actuated:

1. A steam generator lo-lo level of 28% NR (2/3 level instruments in 1/3 steam generators) and one S/U Transformer breaker closed for that Train *
2. Both main feed pumps tripped with the BOP AUTO/DEFEAT switches in AUTO and one S/U Transformer breaker closed for that Train *
3. An engineered safety feature (ESF) sequencer signal
4. An LOSP sequencer signal

FARLEY JANUARY 2005 EXAM

EXAM 50-348 AND 50-364/2005-301
JANUARY 10 - 14, 2005
JANUARY 18, 2005 (written)

DRAFT RO WRITTEN EXAM

OpsAfw009
Motor-Driven Auxiliary Feedwater Pump Control
Figure 5

INTENTIONALLY OMITTED

PER SISP REVIEW

5. AMSAC (2/3 steam generators < 10% NR level for 25 seconds; blocked below C-20 after 260 sec (Figure 13) and one S/U Transformer breaker closed for that Train *

* (i.e. DF01 and DF15 for Train A or DG01 and DG15 open for Train B)

Item 3, a loss-of-feed, occurs when both the high and low pressure stop valves for both main feed pumps indicate closed.

Any MDAFW pump auto-start signal also isolates SG blowdown and sampling. The auto-start signal must be cleared and the MDAFW pump handswitches must be taken to the STOP position (not necessarily at the same time) or control power cycled to the 4160v breaker to reestablish SG blowdown and sampling.

The MDAFW pumps should not be stopped until after the auto-start signal has cleared. A running MDAFW pump will be stopped by any of the following:

1. Placing MCB switch momentarily in the STOP position if pump in REMOTE
2. Placing HSP switch momentarily in the STOP position if pump in LOCAL
3. A load shed signal
4. An overcurrent condition (86 relay); placing the MCB switch momentarily in the STOP position will reset the 86 relay.

When securing the MDAFW pumps manually, all auto-start signals must be cleared or defeated unless the S/U transformer supply breakers to the F and G emergency busses are open. If the F and G emergency busses are being powered from the emergency diesels, the MDAFW pumps can be stopped from the MCB at the operator's discretion regardless of autostart signals. In the LOCAL position, all automatic start signals are bypassed. A common alarm sounds on the MCB when either MDAFW pump is placed in local control.

Each pump has an associated AUTO/DEFEAT switch on the BOP panel. This switch may be used to defeat the loss-of-feed pump signal to the MDAFW pump during shutdown and accident conditions. The switch is also used for individual testing of the MDAFW pumps.

Pump status lights indicate above each control switch on both the MCB and HSP. An amber light above each MCB switch indicates a breaker trip due to an overcurrent condition.

TDAFW Pump Steam Header Warmup Isolation Valves (3234A and B) (Figure 6)

A three-position handswitch (CLOSE/Neutral/OPEN, spring return to Neutral) on the BOP panel controls each air-operated valve. In the neutral position, the valve automatically closes on a

phase A containment isolation signal. Valve position indication lights are located above each switch. The valve will fail closed on a loss-of-power or loss-of-air or power. These valves are located on the non-rad side, 127 foot elevation, in the MSVR.

TDAFW Pump Steam Supply from Steam Generator B (C) (3235A and B; 3226) (Figure 4 and 7)

A three-position handswitch (STOP/AUTO/START, spring return to AUTO) on the MCB provides remote control for each air-operated steam supply valve to the TDAFW pump. A three-position handswitch (STOP/Neutral/START, spring return to Neutral) on the HSP provides local control of the steam supply valves. Steam admission valve 3226 is controlled in conjunction with the steam supply valve from steam generator B. A LOCAL/REMOTE selector switch on the HSP determines whether the local or remote controls are operable. The selector switch must be in REMOTE for the associated MCB switch and auto-start features to be operable.

In the AUTO position of the MCB switch, the associated valve(s) will open automatically on one of the following:

1. A steam generator lo-lo level of 28% NR (2/3 level instruments in 2/3 steam generators)
2. Blackout (An undervoltage signal of 64.4% on 1/2 UV relays on 2/3 RCP buses)**
4. AMSAC (2/3 steam generators < 10% NR level for 25 seconds; blocked below C-20 after 260 sec (Figure 13)

**It is important to note that on Unit 1, Startup transformer 1A feeds 4160v bus 1A and Startup transformer 1B feeds 4160v bus 1B and 1C. Unit 2 is different in that Startup transformer 2A feeds 4160v bus 2B and 2C and Startup transformer 2B feeds 4160v bus 2A. This is important because, depending which unit is being discussed, the loss of a particular Startup transformer may or may not cause a blackout signal to the TDAFW Pump.

With the selector switches in LOCAL, all automatic start signals are bypassed. A common alarm sounds on the MCB when the TDAFW pump is placed in local control.

Unit 1 and Unit 2 differ in operation in that, to manually start the TDAFW pump, Unit 1's valve switches must be held in the START position until the valves are fully open to seal in; Unit 2's valves will open shortly after the switch is taken to START for the 3235A/3226 handswitches.

common three-position handswitch (OPEN/MOD/CLOSE) on the MCB controls the train B solenoid valve (SV-C) for all three discharge valves. The associated LOCAL/REMOTE selector switch on the HSP must be in the REMOTE position to operate a discharge valve from the MCB.

To open a discharge valve, either the associated train A switch or the common train B switch must be placed in the OPEN position. To close a discharge valve, the train A switch must be in the CLOSE position, the train B switch must be in either the CLOSE or MOD position, and the MDAFW pump for that train must be secured. To modulate a discharge valve, the train A switch must be in the MOD position, and the train B switch must be in the MOD position. In the MOD position, 0% demand on the controller will position the FCV to the fully closed position, and 100% demand will position the FCV to the fully open position.

A MDAFW pump auto-start signal will override a modulate signal from the control switches and open the discharge valves. Placing both NORM/RESET switches momentarily in the RESET position will allow the valve to be modulated. An interlock associated with the CLOSE position for each OPEN/MOD/CLOSE switch prevents the valve from being closed when the MDAFW pump for that trains switch is running. If the handswitch is placed in the CLOSE position, the valve will go full open.

A REMOTE/MANUAL setpoint station on the MCB modulates the valve when the HSP selector switch is in REMOTE. In LOCAL, a setpoint station on the HSP controls the valve.

Valve position indication lights indicate above each train A switch. A white indicating light above each reset switch indicates that a MDAFW pump auto-start has occurred and has not been reset.

These valves are located on the non-rad side, 127 foot elevation, in the MSVR.

TDAFW Pump Flow Control Valves (3228A, B, and C) (Figure 10)

Each discharge valve has an associated three-position handswitch (OPEN/MOD/CLOSE) on the MCB. The switch controls two solenoid valves in the control air line to the associated discharge valve. The valve automatically opens upon receiving a TDAFW pump auto-start signal whether the associated switch is in CLOSE or MOD. A RESET/NORM switch on the MCB resets the auto-start signal to all the valves and allows them to be modulated. The valve may be modulated with the associated handswitch in MOD. As in the case of the MDAFW controller, 0% demand on the controller in the MOD position will position the FCV to the fully closed position, and 100% demand will position the FCV to the fully open position.

A LOCAL/REMOTE selector switch on the HSP determines the operability of the associated MCB switch. The selector switch must be in REMOTE for the associated MCB switch to be operable. In the LOCAL position, a local setpoint station must modulate the valve.

Valve position indication lights indicate above each valve control switch. A white indicating light above the reset switch indicates an auto-start signal is present and has not been reset.

These valves are located on the non-rad side, 127 foot elevation, in the MSVR.

Auxiliary Feedwater Stop Valves (3350A, B, and C)

A three-position handswitch (CLOSE/NORM/OPEN, spring return to NORM) located on the MCB controls each valve. Each valve may also be controlled from a local push button control station near the valve. The valve is normally open and the breaker racked out. As a result, the valve position indication lights above the switch must be powered from a DC source separate from the valve control power. A white indicating light above each switch indicates when power is available to the valve. These valves are located on the non-rad side, 127 foot elevation, in the MSVR, near the CTMT wall.

Manual Valve Manipulations Required During Emergency Conditions

During emergency conditions, the procedures direct that certain actions be taken locally. The following is a summary of those actions and associated valve locations.

During a steam break, EEP-2, Faulted Steam Generator Isolation, requires that the TDAFWP steam supply from the faulted steam generator be isolated. If this can not be accomplished from the HSP, local manual manipulations will be necessary. The valves used to accomplish this are located in the Main Steam Valve Room (MSVR) and are normally locked open. The valves are Q1(2)N12V006A for the B SG and Q1(2)N12V005B for the C SG. EEP-2 also requires that all AFW be isolated to the faulted steam generator. This requires unlocking and closing the flow control valve inlet isolations Q1(2)N23V017A, B and/or C. These valves are located above the AFW pump rooms.

Several emergency procedures require isolating steam flow to the TDAFW Pump from the B SG if the B SG is affected **and** the TDAFW Pump is required. This is done by closing the warm-up valves, HV-3234 A & B on the BOP, adjusting the speed control to a minimum on the MCB (pot setting to 0%) to prevent causing an overspeed condition on the TDAFW Pump and

49. 061K1.07 001/2/1/AFW/MEM 3.6/3.8/BANK/FA011005/RO/

Given the following Unit 1 plant conditions:

- The CST is ruptured and has no water in it.
- Unit 1 has tripped.
- All S/Gs are below the narrow range indication and decreasing.
- It has been decided to feed the S/Gs from the Service Water system using the AFW system.
- During the alignment MOV-3209B, MDAFWP SW SUPP, cannot be opened.

Which one of the AFW pumps **DO NOT** have a suction source?

A. 1A MDAFW pump.

B. 1B MDAFW pump.

C. 1A MDAFW pump and the TDAFW pump.

D. 1B MDAFW pump and the TDAFW pump.

Reference SOP-22.0 and OPS- 52102H AFW lesson plan

A. Incorrect, MOV-3209B is not in the flowpath for A train SW to supply the A MDAFW pump

B. Correct - **B MDAFW pump.**
3209B is a direct feed to the B MDAFWP. Due to the normal lineup of v015 C & D being LC, this only affects the B pump. 3209A being closed would affect both the A pump and the TDAFWP.

C Incorrect, the normal SOP-22.0 lineup, the trains are split with the A train supplying the TDAFW pump.

D. Incorrect, B has no source, however the normal SOP-22.0 lineup, the trains are split with the A train supplying the TDAFW pump.

061K1.07 Auxiliary/Emergency Feedwater - Knowledge of the physical connections and/or cause effect relationships between the AFW and the following systems: Emergency Water source.

Discuss the operation and alignment of each major component including precautions and limitations of operation, and applicable procedures, associated with the auxiliary feedwater system including (O40201D11).
- MDAFW Pumps
- TDAFW pump
- MOV-3209A, B - MDAFW Pump Service Water Intake Valves

AFW-52102H02 #6

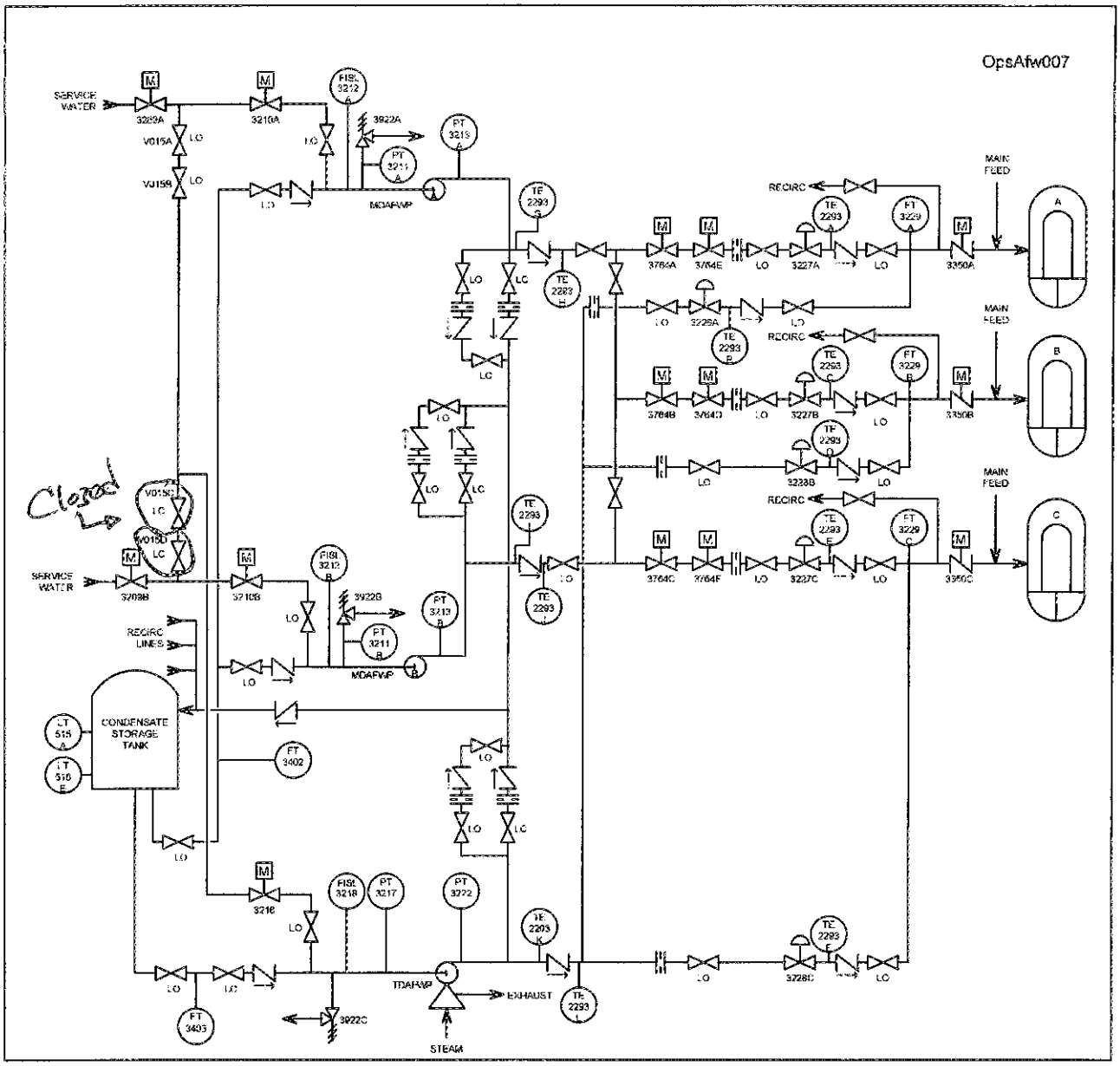

Auxiliary Feedwater System

Figure 2

portions of the AFW pump's minimum flow recirculation line and the flow instrumentation lines attached to the AFW pump suction pipes are located outdoors and exposed to a potential tornado missile. An analysis was performed to ensure that adequate reserve margin in the CST water is available considering a rupture of these lines from missile impact. The result of the analysis showed that the reserve water margin available in the protected volume (150,000 gallons) in the CST is sufficient to maintain the plant at hot standby for 2 hours after a reactor trip. Then the plant would be cooled down in 4 hours to 350°F at a cooldown rate of 50°F/hr while on natural circulation flow in the RCS. This also included the total water volume lost from the assumed ruptured lines on the AFW pump recirculation lines and four unisolated flow instrumentation lines (AFW pump recirculation lines isolated within 30 minutes). The assumptions used to determine this evaluation were: initial low-low steam generator water level, steam generator refilled to no-load programmed level at completion of cooldown to 350°F, and the feedwater source temperature at 110°F.

Service Water Supply

The service water system provides an emergency backup water supply if the condensate storage tank is unavailable. Redundant service water supply lines with associated motor-operated isolation valves (3209A and B, 3210A and B) supply the MDAFW pumps. The service water supply to the auxiliary feedwater pumps does not meet the secondary makeup chemistry specifications and should only be used when required by emergency conditions. A common line with motor-operated valve 3216 connected between the two service water supply header supplies the TDAFW pump. These isolation valves are controlled from the BOP panel.

Service water train A is normally aligned to the TDAFW pump. When shifting service to align SW train B to the TDAFW pump, the SW trains will be temporarily cross-connected, this is accomplished using SOP-22.0. Keys to operate the valves to conduct this train shift must be obtained from the SSS.

Motor-Driven Auxiliary Feedwater Pumps

Two MDAFW pumps provide emergency feedwater flow to the steam generators and are used during startup, shutdown, and emergencies when electrical power is available. Each ten-stage pump is rated at 350 gpm at a total dynamic head of 2845 feet (~1233 psi). MDAFW pump A and B receive power from 4160V buses F and G, respectively. This means that the pumps are normally

50. 062A2.01 001/2/1/CW BKR TRIP/C/A 3.4/3.9/BANK/FA011005/RO/

Unit 1 is 34% power ramping up at 2 MW/min when the following occurs:

- Amps on 1B 4160V bus suddenly drop by ≈900 amps.
- MF4, 4160 VOLT BKR TRIPPED, annunciator alarms.
- "B" loop RCS flow remains stable.
- Condenser pressure is 2.3 psia and slowly degrading.
- KK1, TURB COND VAC LO, annunciator is in alarm.

Which one of the following describes the correct response for these conditions?

A. Stop the ramp and start the non running condensate pump.

B. Trip the turbine and go to AOP-3, Turbine Trip Below P-9 Setpoint.

C. Trip the reactor, trip the turbine and go to EEP-0, Reactor Trip or Safety Injection.

D. Ensure sufficient circulating water flow for plant conditions and reduce turbine load as necessary.

FNP-1-ARP-1.12, MF4

A. Incorrect, The condensate pump bkr is not an input to the "4160 volt Bkr Tripped" alarm, and the condensate pumps only draw ~400 amps. stopping the ramp is a good idea.

B. Incorrect, Required per AOP-8 when reactor power <30% and condenser press >1.7

C. Incorrect, Required per AOP-8 when condenser press > 2.7

D. Correct- **Ensure sufficient circulating water flow for plant conditions and reduce turbine load as necessary.**
the 1B CW pump has tripped in this case and by the indications given, the 1A CW pump was not running. Starting the CW pump should be enough to fix this problem, however it may become necessary to ramp to keep cond vac from tripping the unit.

IMMEDIATE ACTION of MF4
1. DETERMINE WHICH BREAKER IS TRIPPED.
2. IF A REACTOR COOLANT PUMP BREAKER HAS TRIPPED, THEN REFER TO FNP-1-AOP-4.0, LOSS OF REACTOR COOLANT FLOW.
3. IF A CIRCULATING WATER PUMP HAS TRIPPED, THEN ENSURE SUFFICIENT CIRCULATING WATER FLOW FOR PLANT CONDITIONS.
4. IF REQUIRED, THEN REDUCE TURBINE LOAD AS NECESSARY.
5. START NON RUNNING CNDS PUMP IF HDT PUMP TRIPS.
6. VERIFY PROPER OPERATION OF PRZR HEATERS, IF 600V LC 1M IS LOST.

AOP-8
3 Stabilize condenser vacuum using any or all of the following actions based on plant conditions, and the rate at which vacuum is worsening.
3.1 IF Condenser pressure increases above 2.5 psia THEN reduce turbine load as necessary to maintain pressure at or below 2.5 psia.
OR
3.3 Start additional CW PUMP.

062A2.01 AC Electrical Distribution sysetm - Ability to (a) predict the impacts of the following malfunctions or operations on the ac distribution system; and (b) based on those predictions, use procedures to correct, control, or mitigate the consequences of those malfunctions or operations:
Types of loads that, if de-energized, would degrade or hinder plant operation.

Assess plant conditions to determine if entry into AOP-8.0 is required (OPS52520H02).

Describe the sequence of major actions associated with AOP-8.0 (OPS52520H04).

Assess plant conditions to determine if any system components need to be operated while performing AOP-8.0 (OPS52520H06).

CW-52104D01 #1

AOP-8.0, PARTIAL LOSS OF CONDENSER VACUUM

INTRODUCTION

This lesson addresses operator actions necessary to respond to a partial loss of condenser vacuum. These operator actions are performed in order to attempt to prevent a turbine trip due to a loss of condenser vacuum.

GENERAL DESCRIPTION

AOP-8.0, Partial Loss of Condenser Vacuum, provides the symptoms, entry conditions, and procedural guidance for actions necessary to combat a partial loss of condenser vacuum event.

This procedure is written such that the operator is required to respond to the symptoms of a partial loss of vacuum in order to stabilize the plant prior to investigating the cause of the problem.

DETAILED DESCRIPTION

Symptoms or entry conditions requiring the use of AOP-8.0 are as follows:

1. Rapidly falling condenser vacuum
2. Loss of one or both circulating water pumps

Actuation of TURB COND VAC LO annunciator KK1 (1.3 psia when turbine power < 30%, 2.3 psia when turbine > 30%)

Condenser pressure can be monitored from the digital electro-hydraulic control (DEHC) computer, safety parameter display system (SPDS) computer, and main control board (MCB) recorder PR-4029. These all indicate condenser pressure in psia. In addition to the DEHC normal display of condenser pressure in psia on DEHC screens, the DEHC computer will indicate condenser pressure in inches Hg absolute if the condenser pressure DEHC computer point is called up in point detail. These units should be kept in mind by the operator in order to anticipate the automatic main turbine and steam generator feed pump (SGFP) trips due to low

condenser vacuum. The main turbine low-low condenser vacuum trip occurs at 4.41 psia (9" Hg absolute) and the SGFP low-low condenser vacuum trip at 5.9 psia (12" Hg absolute). The first note of the procedure reminds the operating crew of this information and provides the SPDS and DEHC computer points to be used to monitor and/or trend condenser pressure.

Rapidly decreasing condenser vacuum could be indicative of a number of problems. These problems can include, but are not limited to, the following:

1. Loss of one or both circulating water pumps
2. Gland sealing steam system malfunction
3. Loss of cooling tower fans
4. Air inleakage to the condenser
5. Steam jet air ejector (SJAE) malfunction
6. Hotwell level control malfunction
7. Condenser vacuum breaker malfunction
8. Air binding of the condenser water boxes

Procedure Steps

Monitor turbine trip criteria

This step gives guidance based on limitations for main turbine operation with high condenser backpressures as addressed in Westinghouse Customer Communication Letter 86-02, in order to prevent damage to the turbine last row rotating blades. This damage is due to a high vibration stress placed on the turbine blades caused by an aerodynamic condition referred to as "stall flutter." Stall flutter is a condition unique to the last row blading because this row is subjected to variable volumetric flow conditions. Variations in condenser pressure affect the steam density in the last stage, and, as a result, the volumetric flow is not constant. These conditions may result in the blade vibration and cause stress damage. This fatigue damage to the last row blading and disc attachment can occur during relatively brief periods under high backpressure-low load conditions. The damage is cumulative and irreversible with the potential for cracking of blades or disc attachment areas.

The objective of the above step is to ensure that the turbine is tripped if turbine backpressure exceeds the allowable limits. If turbine power $\geq$ 30%, the allowable limit for

turbine backpressure increases from 1.7 psia to 2.7 psia. If reactor power is > 35%, then the reactor is tripped first, and the remainder of this procedure is performed in parallel with EEP-0. If reactor power is < 35%, then AOP-3.0, Turbine Trip Below P-9 Setpoint, is performed in parallel with the remainder of this procedure.

Stabilize condenser vacuum using any or all of the following actions based on plant conditions, and the rate at which vacuum is worsening.

This step lists several actions that the operator must perform, depending on plant conditions, that should stabilize condenser vacuum in order for personnel to investigate and correct the cause of the loss of vacuum. The steps are:

Reduce turbine load until vacuum stabilizes. This is performed in order to lower the steam flow into the condenser to within the reduced capabilities of the condenser so that a turbine trip can be avoided. The rate and magnitude of the load decrease must be determined according to the plant conditions existing at the time of the loss of vacuum.

Verify proper operation of on-service steam jet air ejectors (SJAEs). The accompanying note alerts the operator that starting a second section on a malfunctioning SJAE may worsen vacuum problems.

Start an additional circulating water pump as required. In order for this step to be effective, obviously the plant must be in a low power configuration with only one circulating water pump in operation with the other pump in standby and ready to start. Increasing the cooling water flow through the main condenser will allow more steam to be condensed, thus, stabilizing vacuum.

Start additional cooling tower fans as required. Depending on plant conditions, this could take some time before any effects are seen from the lowered circulating water temperature.

Dispatch personnel to verify main turbine gland steam pressures - GREATER THAN 1 psig.

The operator is directed to verify proper gland seal steam pressures. This step is performed by dispatching personnel to the main turbine to check for malfunctioning gland seal steam regulators indicated by gland pressure of less than one (1) psig on any main turbine gland

LOCATION MF4

F4
4160 VOLT BKR TRIPPED

SETPOINT: Not Applicable

ORIGIN: 52b Auxiliary Contact from any of the following Breakers:

a) DA04 - Reactor Coolant Pump 1A
b) DA05 - Circulating Water Pump 1A
c) DB03 - Reactor Coolant Pump 1B
d) DB04 - Circulating Water Pump 1B
e) DC03 - Reactor Coolant Pump 1C
f) DD04 - S/S Xfmer 1U, 1W, & 1Y
g) DD05 - S/S Xfmer 1P
h) DD08 - S/S Xfmer 1A
I) DD09 - S/S Xfmer 1B
j) DD10 - S/S Xfmer 1M
k) DD11 - Switchyard Xfmer 1A
l) DD12 - Lighting Xfmer 1I
m) DE04 - S/S Xfmer 1V, 1X & 1Z
n) DE07 - S/S Xfmer 1C
o) DE08 - S/S Xfmer 1N
p) DE11 - S/S Xfmer 1T & 1AA
q) DE09 - S/S Xfmer 1Q
r) DE12 - Lighting Xfmer 1J

PROBABLE CAUSE

1. One or more of the above breakers tripped on fault.

AUTOMATIC ACTION

NONE

NOTE: IF a Reactor Coolant Pump Breaker is tripped, THEN a Reactor Trip will occur from Single Loop Loss of Flow IF Reactor Power is above P-8 setpoint.

LOCATION MF4

IMMEDIATE ACTION

1. DETERMINE WHICH BREAKER IS TRIPPED.
2. IF A REACTOR COOLANT PUMP BREAKER HAS TRIPPED, THEN REFER TO FNP-1-AOP-4.0, LOSS OF REACTOR COOLANT FLOW.
3. IF A CIRCULATING WATER PUMP HAS TRIPPED, THEN ENSURE SUFFICIENT CIRCULATING WATER FLOW FOR PLANT CONDITIONS.
4. IF REQUIRED, THEN REDUCE TURBINE LOAD AS NECESSARY.
5. START NON RUNNING CNDS PUMP IF HDT PUMP TRIPS.
6. VERIFY PROPER OPERATION OF PRZR HEATERS, IF 600V LC 1M IS LOST.

SUPPLEMENTARY ACTION

1. Notify appropriate personnel to determine and correct the cause of the Breaker Trip.
2. Return the affected component to service when the fault has been corrected.

References: A-177100, Sh. 574; D-172739; D-172740; C-172755; C-172758; D-177174; D-177016; D-177017.

LOCATION KK1

SETPOINT: 1. 1.3 psia when < 30% power
2. 2.3 psia when > 30% power

ORIGIN: DEH

K1
TURB COND VAC LO

PROBABLE CAUSE

1. Low Circulating Water Flow or Loss of Circulating Water.
2. Gland Seal Steam System fault.
3. Improper valve lineup resulting in air leaking into the Condenser.

AUTOMATIC ACTION

NOTE: IF condenser vacuum decreases to 21" Hg (4.41 psia), THEN a turbine trip occurs.

NONE

IMMEDIATE ACTION

CAUTION: WHEN the turbine is operating at ≥ 30% load, THEN the maximum permissible condenser pressure is 5.5 inches Hg (2.7 psia). WHEN the turbine is operating at < 30% load, THEN the maximum permissible condenser pressure is 3.5 inches Hg (1.7 psia).

1. PERFORM THE ACTIONS REQUIRED BY FNP-1-AOP-8.0, PARTIAL LOSS OF CONDENSER VACUUM.

SUPPLEMENTARY ACTION

NONE

References: A-177100, Sh. 491; D-172803; D-170812, Sh. 2; U-162213, Tab 5; Westinghouse Customer Advisory Letter 86-02; DCP P-95-1-8943

QUESTIONS REPORT

for 062a2.01

CW-52104D01 001/HLT/LOCT//C/A (LEVEL 2/3) SYS/075A2.02///LOCT/

Unit 1 is 33% power ramping up at 2 MW/min when the following occurs:

- Amps on 1B 4160V bus suddenly drop by ≈900 amps
- MF4, "4160V BKR TRIPPED" annunciator alarms
- "B" loop RCS flow remains stable
- Condenser pressure is 1.9 psia and slowly degrading

Which one of the following describes the correct response for these conditions?

A. Start the non running condensate pump.

B. Trip the reactor, trip the turbine and go to EEP-0, Reactor Trip or Safety Injection.

C. Trip the turbine and go to AOP-3, Turbine Trip Below P-9 Setpoint.

D. Ensure sufficient circulating water flow for plant conditions and reduce turbine load as necessary.

FNP-1-ARP-1.12, MF4

A. Incorrect, The condensate pump bkr is not an input to the "4160 volt Bkr Tripped" alarm, and the condensate pumps only draw ~400 amps.
B. Incorrect, Required per AOP-8 when condenser press > 2.7
C. Incorrect, Required per AOP-8 when reactor power <30% and condenser press >1.7
D. Correct

01/07/02 14:35:05 UNIT 1 FNP-1-ARP-1.12

LOCATION MF4

IMMEDIATE ACTION

1. DETERMINE WHICH BREAKER IS TRIPPED.
2. IF A REACTOR COOLANT PUMP BREAKER HAS TRIPPED, THEN REFER TO FNP-1-AOP-4.0, LOSS OF REACTOR COOLANT FLOW.
3. IF A CIRCULATING WATER PUMP HAS TRIPPED, THEN ENSURE SUFFICIENT CIRCULATING WATER FLOW FOR PLANT CONDITIONS.
4. IF REQUIRED, THEN REDUCE TURBINE LOAD AS NECESSARY.
5. START NON RUNNING CNDS PUMP IF HDT PUMP TRIPS.
6. VERIFY PROPER OPERATION OF PRZR HEATERS, IF 600V LC 1M IS LOST.

A. **Purpose**

This procedure provides actions to prevent a turbine trip following a partial loss of condenser vacuum.

This procedure is applicable in Modes 1 and 2.

B. **Symptoms or Entry Conditions**

I. This procedure is entered when a partial loss of condenser vacuum is indicated by any of the following:

a. Rapidly falling condenser vacuum

b. Loss of one or both circulating water pumps

c. Actuation of TURB COND VAC LO annunciator KK1 (1.3 psia when less than 30% turbine power, 2.3 psia when greater than 30% turbine power)

Step	Action/Expected Response	Response NOT Obtained

NOTE:
- DEHC point CNDP1 displays condenser pressure in inHga absolute on the point detail page. On all other pages CNDP1 displays condenser pressure in psia.
- SPDS points PT0214 and PT0215 display condenser pressure in psia.
- MCB recorder PR 4029 displays condenser pressure in psia.
- Main turbine trip will occur at 4.41 psia (9 inHga)
- SGFP trip will occur at 5.9 psia (12 inHga)

___ **1 Monitor Condenser pressure**

1.1 IF condenser pressure is at 2.3 psia
THEN increased monitoring of condenser pressure is required.

2 Monitor turbine trip criteria.

2.1 WHEN turbine power greater than or equal to 30%,
THEN verify condenser pressure less than 2.7 psia (5.5 inHga).

2.1 Perform the following.

2.1.1 IF reactor power greater than 35%,
THEN trip the reactor.

2.1.2 Place MAIN TURB EMERG TRIP to TRIP for at least 5 seconds.

2.1.3 IF the reactor was tripped,
THEN go to FNP-1-EEP-0, REACTOR TRIP OR SAFETY INJECTION. Perform the remainder of this procedure in parallel with EEP-0.

2.1.4 Proceed to step 2.

Step 2 continued on next page.

___Page Completed

Step	Action/Expected Response	Response NOT Obtained
	2.2 WHEN turbine power less than 30%, THEN verify condenser pressure less than 1.7 psia (3.5 inHga).	2.2 Perform the following. 2.2.1 Place MAIN TURB EMERG TRIP to TRIP for at least 5 seconds. 2.2.2 Perform FNP-1-AOP-3.0, TURBINE TRIP BELOW P-9 SETPOINT in parallel with the remainder of this procedure.
____ 3	**Stabilize condenser vacuum using any or all of the following actions based on plant conditions, and the rate at which vacuum is worsening.**	
	3.1 IF Condenser pressure increases above 2.5 psia THEN reduce turbine load as necessary to maintain pressure at or below 2.5 psia. OR	

NOTE: Normal SJAE alignment is one section per SJAE. Starting a second section on a SJAE may worsen vacuum if the SJAE is malfunctioning to begin with.

	3.2 Verify proper operation of onservice SJAEs. OR 3.3 Start additional CW PUMP. OR 3.4 Start additional COOLING TOWER FANS.	3.2 Swap SJAEs or place additional SJAE sections in service as required to obtain proper SJAE operation.

_____Page Completed

Step	Action/Expected Response	Response NOT Obtained
___ 4	**Dispatch personel to verify main turbine gland steam pressures - GREATER THAN 1 psig. (189 ft, TURB BLDG)**	4 IF any gland steam regulator failed, THEN adjust manual bypass valve.
___ 5	**Dispatch personnel to verify SJAE regulator - OPERATING PROPERLY. (155 ft, TURB BLDG)**	5 Manually adjust regulator to maintain greater than 120 psig.
___ 6	**Dispatch personnel to verify on service GSSC EXH FAN - OPERATING PROPERLY. (155 ft, TURB BLDG)**	6 Start standby GSSC EXH FAN using FNP-1-SOP-28.4, GLAND SEALING STEAM SYSTEM.
___ 7	**Verify condenser vacuum breakers closed.**	
	7.1 Verify COND VAC BKR VLVS N1N51V519A/519B - CLOSED.	
	7.2 Verify COND VAC BKR MAN ISO N1N51V518A and N1N51V518B - CLOSED. (155 ft, TURB BLDG)	
	7.3 Verify condenser vacuum breaker water seal - ESTABLISHED.	
___ 8	**Dispatch personnel to inspect main condenser for leaks.**	
___ 9	**Dispatch personnel to vent condenser water boxes.**	
___ 10	**Check hotwell level - LESS THAN 4 ft.**	10 Manually control hotwell level.
		10.1 Verify hotwell fill valve controlling properly. HOTWELL FILL [] CP 4055F adjusted
		10.2 IF required, THEN establish hotwell flush using FNP-1-SOP-21.0, CONDENSATE AND FEEDWATER SYSTEM.

___ Page Completed

Step	Action/Expected Response	Response NOT Obtained
11	**IF** condenser vacuum returned to normal. **THEN** go to procedure and step in effect.	11 Return to step 1.

-END-

51. 063A1.01 001/2/1/BATTERY/C/A 2.5/3.3/BANK/FA011005/RO/

While operating at 100% on Unit 1 the following events occurred:

- The 1B S/U transformer failed.
- 1B D/G failed to start resulting in a complete loss of B train power.
- Annunciators for instrument inverters 1C, 1D, and 1G are presently in alarm.

How are the 120V AC vital panels 1C and 1D affected by these inverter faults?
Assume no operator action

A. They are de-energized.

B. They are being powered by 2C DG.

C. They should have transferred to their alternate supply.

D. They will be de-energized in approximately two (2) hours.

FNP-0-ARP-2.1 Loc. VD1, VD2, VD3

A. Incorrect, Batteries last approximately 2 hours.

B. Incorrect, 2C does not autostart. Since the stem does not say the 2C DG is running, then it is not since it does not auto start.

C. Incorrect, Bypass source is not available due to the loss of power.

D. Correct- **They will be de-energized in approximately two (2) hours.**
The vital panels have lost power to the battery charger and the alternate supply to the inverters. The batteries are now suppling these panels. They are rated for approx. 2 hours to supply the loads.

OPS-*52103C*

Under normal conditions, each 125V DC battery has adequate storage capacity to carry the following types of vital loads without battery charger support for a period of two hours. These types of vital loads are listed as:
1. Instrumentation inverters

063A1.01 DC Electrical distribution system. Ability to predict and/or monitor changes in parameters associated with operating the DC electrical system controls including: Battery capacity as it is affected by discharge rate.

Assess abnormal plant or equipment conditions associated with the DC Distribution System and determine the integrated plant actions needed to mitigate the consequence of the abnormality (OPS52103C02).

120 VAC-52103D02 #8

Under normal conditions, each 125V DC battery has adequate storage capacity to carry the following types of vital loads without battery charger support for a period of two hours. These types of vital loads are listed as:

1. Instrumentation inverters
2. Engineered safety features controls
3. Emergency lights
4. Circuit breaker tripping and closing
5. Diesel generator field flashing and control
6. DC solenoids for air-operated valves
7. Miscellaneous controls and alarms
8. Reactor trip switchgear

The equipment design and layout provides two complete independent and redundant DC systems. The batteries are installed in separate rooms on the non-rad side 121 foot elevation with a class A fire rating to prevent simultaneous damage to both batteries. Each battery room is ventilated to the roof through separate exhaust fans. Fire dampers in the supply and exhaust ducts of each battery room localize the effects of a fire to the battery room that has a fire. The battery chargers are in separate rooms outside the battery rooms. The swing battery charger is located in a room adjacent to and separated from the other battery charger rooms.

As mentioned before, the DC buses supply the auxiliary building DC loads. Direct current bus A supplies primary power for static inverters A, B, and F, while DC bus B supplies primary power for inverters C, D, and G.

Bus 1A and 2A supply power to diesel generator control panels 1C and 1-2A through separate power seeking automatic transfer switches (ATSs). Bus 1B and 2B supply power to diesel generator control panel 2C through a similar ATS. Diesel generator control panels 1B and 2B receive their power from bus 1B and 2B respectively. Control panels 1B and 2B do not need ATS devices. The ATSs are located in their respective diesel generator room. For 1-2A and 2C diesel generators their ATSs have a designated normal and emergency unit. For these ATSs Unit 1 is designated as the NORMAL supply and Unit 2 is designated as the EMERGENCY supply. 1C diesel generator ATS does not have a designated normal or emergency unit supply. The ATSs automatically switch to the emergency source of DC control power if the normal supply voltage

FARLEY JANUARY 2005 EXAM

EXAM 50-348 AND 50-364/2005-301
JANUARY 10 - 14, 2005
JANUARY 18, 2005 (written)

DRAFT RO WRITTEN EXAM

OpsEps031 and 032
Unit 1 Electrical Distribution
Figure 1 & Figure 2
2 Pages

INTENTIONALLY OMITTED

PER SISP REVIEW

LOCATION VD1

D1
1C INV FAULT

SETPOINT:
1. Battery near exhaustion 107V DC.
2. Inverter output undervoltage 108V AC

ORIGIN:
1. Battery near exhaustion X7 Voltage sense board
2. Inverter current limit A3 Ammerter Relay
3. Inverter output undervoltage K3 Relay via X8 voltage sense board
4. Inverter overheating X10 relay board
5. Out of sync X12 relay board
6. Fan failure
7. Bypass source supplying load

PROBABLE CAUSE

1. Bypass source carrying load.
2. Inverter out of sync with bypass supply.

AUTOMATIC ACTION

1. IF DC input voltage drops to 103 V DC, THEN inverter transfers to bypass source.
2. IF inverter fails, THEN the bypass source should carry the load.
3. An inverter fault when the bypass source is not available resulting in a loss of power to 120 VAC Vital Instrument Panel 1C will be indicated by the following:

   A. Annunciators FD3 AND FD4 will alarm.
   B. Annunciators HC4 AND HD1 will be OFF.

CAUTION: OUTWARD ROD MOTION IS BLOCKED BY THE HIGH POWER ROD STOP BISTABLE BEING TRIPPED.

   C. Loss of power to NI-43 with associated alarms, bistable trip status lights and indication.
   D. No amperage on inverter 1C ammeter.

IMMEDIATE ACTION

1. IF 120 VAC VITAL INSTRUMENT PANEL 1C IS DE-ENERGIZED, THEN IMMEDIATELY PERFORM THE FOLLOWING:

   A. IF REACTOR TRIP OCCURRED, THEN REFER TO FNP-1-EEP-0, REACTOR TRIP OR SAFETY INJECTION.
   B. ATTEMPT TO RESTORE POWER FROM THE BYPASS SOURCE BY PERFORMING THE FOLLOWING:
      1. IF THE "BYPASS SOURCE AVAILABLE" LAMP IS ILLUMINATED ON THE INVERTER, THEN TRANSFER 1C INVERTER MANUAL BYPASS SWITCH TO THE "BYPASS SOURCE TO LOAD" POSITION.
      2. IF THE "BYPASS SOURCE AVAILABLE" LAMP IS NOT ILLUMINATED ON THE INVERTER, THEN PERFORM THE FOLLOWING:
         - VERIFY MCC 1B ENERGIZED
         - VERIFY CLOSED FBJ5L SUPPLY TO REGULATED AC DISTRIBUTION PANEL 1H
         - VERIFY CLOSED BKR #7 IN REGULATED AC DISTRIBUTION PANEL 1H (1B BATTER CHARGER ROOM)
         - TRANSFER 1C INVERTER MANUAL BYPASS SWITCH TO THE "BYPASS SOURCE TO LOAD" POSITION
   C. NOTIFY APPROPRIATE PERSONNEL TO DETERMINE THE CAUSE AND CORRECT.

SUPPLEMENTARY ACTION

CAUTION: In addition to items listed under Automatic Action, the following controls are affected if Vital Panel 1C is De-energized.

- **Q1B31PCV445A PRZR PORV will not open on high przr pressure signal.**
- **Q1E21LCV115B and D RWST TO CHG PUMP will open if LT 115 is inoperable.**

1. Verify that Q1E21LCV115B and D RWST TO CHG PUMP valves are closed.
2. Verify Q1B31PCV445A PRZR PORV is closed.
3. Annunciator KG4, TURB TV closed alert, will be in alarm and TSLB2, 14-3 will be lit.
4. Annunciator KH5, TURB Auto/Stop oil press low, will be in alarm and TSLB2, 13-3 will be lit.

LOCATION VD1

SUPPLEMENTARY ACTION (cont'd)

NOTE:	**Per Table 6 of FNP-0-ACP-52.1, Guidelines for Scheduling of On-Line Maintenance, Inverters A, B, C, D or F on bypass source are considered to be unavailable due to being status A1 for the Maintenance Rule. This unavailability should be logged for tracking purposes.**

5. Refer to Technical Specifications 3.8.7 and 3.8.8.
6. IF necessary, THEN reset the positive and negative rate trips on NI-43 and verify proper operation on NI-43.
7. Verify all other MCB controls and indications have returned to normal.
8. Have inspection of areas outside control room conducted to verify all controls and indications outside of the control room are returned to normal.
9. WHEN cause of fault has been corrected, THEN return inverter to service.

{CMT 009705} {CMT 0005094} applies to entire annunciator.

References: U-210676; PCN B87-1-2899; D-177212; D-177218, Sh.2; DCP 93-2-8551 (Bit Deletion); **{CMT 009705} {CMT 0005094}**

52. 064K4.02 001/2/1/DG/MEM 3.9/4.2/BANK/FA011005/RO/

1-2A Diesel Generator has started due to a loss of off-site power (LOSP) signal. Which one of the following will cause it to trip automatically in this condition?

A. Low lube oil pressure.

B. High crankcase pressure.

C. High jacket water pressure.

D. High jacket water temperature.

OPS-52102I – 40102C DG lesson plan
In addition to giving a start signal to the diesel, the **ES relay** performs the following functions when it is energized:
1. Removes all of the diesel shutdowns except the essential engine protection shutdowns (generator phase differential, engine fail-to-start, engine over-speed, and low lube oil pressure).

A. correct- **Low lube oil pressure.**
This is an essential engine trip as described above. Since an LOSP is an emergency start signal, only essential engine trips will trip the EDG.

B. incorrect, non-essential trip

C. incorrect, non-essential trip

D. incorrect, non-essential trip

064 K4.02 Knowledge of the EDG system design feature(s) and/or interlocks which provide for the following: Trips while operating the EDG (normal or emergency)

Predict and explain the following instrument/equipment response expected when performing Diesel Generator and Auxiliaries System evolutions including the fail condition, alarms, and trip set points (OPS40102C08).
- Diesels 1-2A, 1B, 2B
- Lube Oil High Temperature Engine Shutdown (TS-549, TS-550)
- Low Oil pressure Shutdown Switch (PS-553, PS-554)

DG-40102C08 #4

either unit will start the diesels. Once the diesels have started, the sequencers will control how they will be aligned and is discussed in the Diesel Sequencer lesson.

The 2C diesel is dedicated to being the Alternate AC (AAC) power source during Station Blackout (SBO) events. It is designated as the SBO diesel and does not receive an automatic start signal for either Unit I or Unit II. The diesel is dedicated to either Unit I 4160V bus G and bus J or Unit II 4160V bus G and bus J. If the 2C diesel is to be started up for an emergency situation, the mode selector switch must be in the MODE 1 position, and the unit selector switch must be in either the UNIT 1 or UNIT 2 position. The unit selector switch determines which unit the diesel will align itself to once it is manually started from the EPB and is discussed in the Diesel Sequencer lesson. To start up the 2C diesel for a test start, the mode selector switch must be in the MODE 2 position, and the unit selector switch must be in the TEST position.

Diesel Startups

Refer to Figures 18 and 19. The inputs to the "or box" labeled "A" on Figure 18 are shown on Figure 17. An auto start signal for an emergency diesel will energize its emergency start (ES) relay, provided the mode selector switch is in the MODE 1 or MODE 2 position and the mode 4 selector switch is in the OFF position. The ES relay seals itself in once it is energized. The ES relay will energize the air-start solenoids provided: (1) the engine trouble shutdown relay (SDR) is not energized, (2) a generator phase differential signal is not present, (3) the generator phase differential signal is reset, and (4) the low speed relay (LSR) is not energized. Also, for the big diesels, (5) the barring device is not engaged. When the start signal is received, it seals itself in, and a timer starts. If the start signal is still present after seven seconds, the engine fail-to-start signal is generated. The engine fail-to-start signal will energize the SDR, which will (1) break the seal-in on the start signal and (2) send a signal to stop the diesel. Under normal conditions, the LSR will be energized in less than seven seconds because the diesel will have started and be up to speed. When the LSR is energized, the seal-in on the start signal is broken, and the start signal is removed. Removing the start signal stops the timer and prevents the engine fail-to-start signal from being generated.

A quick visual method for determining whether a diesel generator is ready for an automatic start is the DIESEL READY AUTO START light. This is an amber colored light on

the EPB for each diesel generator. The conditions to light this light for the big diesels are: (1) The barring device is not installed; (2) the shutdown relay has timed out (140 second time delay); (3) the low speed relay has de-energized (DG speed < 115 rpm). The conditions to light this light for the little diesels are: (1) the shutdown relay timed out (100 second time delay), (2) the low speed relay has de-energized (DG speed < 250 rpm).

In addition to giving a start signal to the diesel, the ES relay performs the following functions when it is energized:

1. Removes all of the diesel shutdowns except the essential engine protection shutdowns (generator phase differential, engine fail-to-start, engine over-speed, and low lube oil pressure).
2. Prevents the test start relay (TSR) from being energized, which results in zero speed and voltage droop characteristics.
3. The ES relay seals itself in, provided the emergency start-reset push button is not being pushed and the mode 4 selector switch is in the OFF position.

The ES relay can be momentarily energized by using the local start push button with the mode 4 selector switch in the M-4 position. The diesel will start in the manner previously described. However, the ES relay will not seal itself in since the mode 4 selector switch is not in the OFF position. When the diesel is started in this manner, it exhibits zero speed and voltage droop characteristics. The operator also has the capability to control diesel generator frequency (speed) and voltage.

Energizing the TSR only will also give a diesel start signal. When the TSR is energized instead of ES relay, all engine shutdown signals are able to stop the diesel, and speed and voltage droop characteristics are present, which means the operator has speed and voltage control capability.

Having the mode 4 selector switch in OFF and the ES relay de-energized allows the following signals to energize the TSR:

1. Remote start push button on the EPB when in mode 2
2. Local start push button on the DLCP when in mode 3
3. Emergency start reset push button on the EPB when the diesel is running - (NOTE: This push button also de-energizes the ES relay)

53. 065AA1.03 001/1/1/EMERG AC/MEM 2.9/3.1/NEW/FA011005/RO/

Given the following on Unit 2:

- Instrument air header pressure has dropped to zero psig three hours ago due to a severe instrument air header rupture.
- The Instrument air header has been repaired and components are being realigned to a normal lineup.

Which one of the following actions needs to be performed IAW AOP-6.0, Loss of Instrument Air to restore the plant to a normal lineup?

A. FCV-113A, BORIC ACID TO BLENDER, and FCV-114B, REAC MKUP TO BLENDER, needs to be opened to restore control of the reactor makeup system.

B. The LOCAL/REMOTE handswitch for the Atmospheric relief valves needs to be placed in REMOTE and control the ARVs from the HSD panel restored to the MCB.

C. The LOCAL/REMOTE handswitch for the TDAFWP steam supply valves needs to be placed in REMOTE and control the TDAFW pump from the HSD panel restored to the MCB.

D. HV-3611, INST AIR SUPPLY TO CTMT, HV-3885 and HV-3825, INSTR AIR TO PENE RM AUTO ISO, needs to be opened to restore control of charging, PORVs, and PRZR spray valves.

A. Incorrect - FCV-113A and FCV-114 B will realign when air pressure is restored. the fail position for FCV-113A is OPEN and it will go closed when air is restored, and FCV-114B fails CLOSED on loss of air and it will remain closed when air is restored. The operator has to re-align RMW by verifying FK-113 is adjusted properly, and checking the RMW is in AUTO and START.

B. Incorrect - The procedure has the operator align EAC to the ARVs IAW SOP-62 which establishes control of the ARVs at the MCB with EAC supplying the ARVs.

C. Incorrect - The procedure has the operator align EAC to the TDAFW pump vales and control from the MCB. Align emergency air compressors to supply the TDAFW pump steam supply valves, control the TDAFW pump from the MCB IAW SOP-62.

D. Correct - **HV-3611, INST AIR SUPPLY TO CTMT, HV-3885 and HV-3825, INSTR AIR TO PENE RM AUTO ISO, needs to be opened to restore control of charging, PORVs, and PRZR spray valves.**

065AA1.03 Loss of Instrument Air - Ability to manually operate and/or monitor the following as they apply to the Loss of Instrument Air: Restoration of systems served by Instrument air when pressure is regained.

Evaluate plant conditions to determine if any system components need to be operated while performing AOP-6.0 (OPS52520F06).

Evaluate abnormal plant or equipment conditions associated with the auxiliary feedwater (AFW) system and determine the local actions needed to mitigate the consequence of the abnormality (OPS-40201D12).

Predict and explain the following instrument/equipment response expected when performing auxiliary feedwater evolutions including the fail condition, alarms, trip setpoints (OPS-40201D08). This also includes:

- HV-3235A, B - TDAFW Steam Supply from Steam Generator B (C)
- HV-3226 - TDAFW Steam Supply Isolation Valve

Starting or ensuring auto starts of additional air compressors, ensuring manual or automatic isolations of components or portions of the air systems, and aligning the opposite unit's C air compressor, if available, are all steps that could maintain air pressure.

The above steps are important, but the main control board (MCB) operator should assign additional available personnel to perform these steps. The MCB operator should continue to monitor the plant and control parameters, using the procedure as necessary, to maintain plant safety.

Maintain Control of Plant Parameters

Pressurizer Level and Pressure Control

Whenever air pressure is lost to the penetration room due to a total loss of instrument air pressure or penetration room high pressure, rapid operator action may be required to prevent pressurizer level and pressure from rising too high.

With low air pressure, penetration room instrument air isolation valves HV-3885 and HV-3825 and containment instrument air isolation valve HV-3611 will all fail closed. When normal instrument air pressure is restored, these valves will have to be opened at the balance of plant (BOP) panel.

With no air in the penetration room, charging flow control valve FCV-122, normal and alternate charging valves HV-8146 and HV-8147, and seal injection flow control valve HCV-186 will all fail open, causing maximum charging and seal injection flow. Letdown isolation valves LCV-459 and 460 and orifice isolation valves HV-8149A, B, and C will all fail closed, causing a complete loss of letdown. The normal spray valves, aux spray valve HV-8175, and pressurizer power-operated relief valves (PORVs) all fail closed on a loss of air, eliminating any convenient method of reactor coolant system (RCS) pressure reduction.

With maximum charging and seal injection flow with no letdown flow, pressurizer level will rise rapidly. The auto makeup system will not function without air. When volume control tank (VCT) falls to 5%, charging pump suction will shift to the refueling water storage tank (RWST). The increasing pressurizer level can cause level to exceed Technical Specification limits or exceed the reactor trip setpoint. As pressurizer level goes up, the backup heaters will turn on for a level deviation high and with the steam bubble being compressed, the pressure will rise rapidly. With the PORVs, spray valves, and auxiliary spray valve failed closed, pressure will exceed the high

pressurizer pressure reactor trip setpoint and may rise until pressurizer safeties are forced to lift unless nitrogen is aligned to the PORVs.

Initially, the quickest method the operator has to control pressurizer level is to close either charging pump to regenerative heat exchanger valve MOV-8107 or 8108. Pressurizer level will continue to rise due to seal injection flow and letdown being isolated. For the long term, the use of local bypass valves around FCV-122 would provide the operator with finer level control. Even though pressurizer level would still be rising slowly, charging pumps should not be stopped because seal injection will be lost. A loss of instrument air will cause component cooling water (CCW) flow through the reactor coolant pump (RCP) thermal barriers to be stopped. If seal injection is also lost, then seal damage and failure could occur.

Steam Generator Level and Pressure Control

The flow control valves for the motor-driven auxiliary feedwater (MDAFW) and turbine-driven auxiliary feedwater (TDAFW) pumps will all fail open when instrument air is lost. The auxiliary feedwater (AFW) pumps may be running at this time from previous operations or an auto start. If no AFW pumps are running, then at least one AFW pump should be started to ensure adequate heat sink. The steam admission valves, for the TDAFW pump, will fail closed without air pressure; however, the valve's air reservoir will allow two hours of pump operation. Emergency air compressor operation will supply air to the TDAFW steam admission valves.

After instrument air is lost, the operator has four methods available from the control room to control AFW flow. Turbine-driven auxiliary feedwater flow can be controlled by adjusting the speed of the pump or stopping the pump. Motor-driven auxiliary feedwater flow can be controlled by closing and opening AFW motor-operated valves, MOVs-3764 A through E, or starting and stopping MDAFW pumps. In most circumstances, to stop any AFW pump from the MCB, all auto start signals must be cleared. An exception to this statement is when an Emergency DG is the sole power supply for 4160V Bus F or G (S/U Transformer supply breakers are open). In this case, the MDAFWP may be stopped and started as desired from the MCB regardless of any auto start signal.

Excessive starting and stopping of MDAFW pumps can cause damage. In accordance with SOP-22.0, pump starts should be limited to two successive starts from ambient temperature and one

start from rated temperature. For subsequent starts, allow 30 minutes running time or 60 minutes idle time between starts.

For the long-term, operating the MDAFW pump and manually overriding the MDAFW flow control valves (FCVs) to control AFW flow would provide finer control.

The steam generator (SG) atmospheric reliefs and steam dumps require air to operate. When instrument air is lost, there is no convenient way to dump steam to remove decay heat from the reactor. The emergency air compressors can be aligned to supply air to the SG atmospheric relief valves and TDAFW pump steam admission valves. When the emergency air compressor is aligned, control of the atmospheric reliefs can be accomplished from the MCB M/A station. Without the emergency air compressors, operation of the valves locally can be accomplished using manual handwheel control.

Effects on Service Water (SW) to CCW System

A loss of instrument air causes SW from CCW heat exchanger (Hx) 1A (B,C) flow control valves (FCV-3009A [B,C]) to fail to 35° open. The stand-by Hx is receiving 1/3 of the total SW flow available to the CCW heat exchangers, thus potentially limiting the heat removal capabilities of the on-service and off-service CCW heat exchangers. To ensure maximum heat removal capability of the on-service and off-service CCW heat exchangers, SW is isolated to the standby CCW Hx by closing the SW inlet MOV.

Restore Normal Plant Control

After instrument air pressure has been restored, the abnormal equipment lineups that were used to control the plant must be returned to normal. This action must be done in a controlled manner to ensure that a pipe rupture is not unisolated and that plant parameters are maintained under control.

PROCEDURE STEP DESCRIPTION

Purpose

This procedure provides actions for response to a loss of instrument air pressure.

Step	Action/Expected Response	Response NOT Obtained
___10	**Verify SW isolated to standby CCW heat exchanger.**	

Standby CCW HX	2C	2B	2A
SW TO 2C(2B,2C) CCW HX Q2P16MOV	[]3130C closed	[]3130B closed	[]3130A closed

___11	**Align nitrogen supply to PRZR PORVs using FNP-2-SOP-62.1, BACK-UP AIR OR NITROGEN SUPPLY TO THE PRESSURIZER POWER OPERATED RELIEF VALVES.**	
___12	**Stabilize RCS TAVG at existing value.**	
12.1	Control SG atmospheric reliefs using FNP-2-SOP-62.0, EMERGENCY AIR SYSTEM. 2A(2B,2C) MS ATMOS REL VLV [] PC 3371A adjusted [] PC 3371B adjusted [] PC 3371C adjusted	12.1 Locally control SG atmospheric reliefs with handwheels. (127 ft, AUX BLDG main steam valve room) 2A(2B,2C) MS ATMOS REL VLV [] Q2N11PV3371A [] Q2N11PV3371B [] Q2N11PV3371C
___13	**Return to step 2.**	
___14	**Align instrument air to containment. (BOP)** IA TO PENE RM [] N2P19HV3825 open [] N2P19HV3885 open IA TO CTMT [] N2P19HV3611 open	
___15	**<u>IF</u> charging bypass flow control in service, <u>THEN</u> align normal charging flow control using FNP-2-SOP-2.1, CHEMCIAL AND VOLUME CONTROL SYSTEM PLANT STARTUP AND OPERATION.**	

___Page Completed

Step	Action/Expected Response	Response NOT Obtained
___16	**Establish normal letdown using FNP-2-SOP-2.1, CHEMCIAL AND VOLUME CONTROL SYSTEM PLANT STARTUP AND OPERATION.**	
___17	**Verify reactor makeup system aligned.** 17.1 VERIFY BORIC ACID MKUP FLOW FK 113 - ADJUSTED TO DELIVER GREATER THAN EXISTING RCS BORON CONCENTRATION. 17.2 Verify reactor makeup system - IN AUTOMATIC MODE. MKUP MODE SEL SWITCH [] N2E21HS2100Q in AUTO MKUP MODE CONT SWITCH [] N2E21HS2100P TO START	17 Manually control reactor makeup system using FNP-2-SOP-2.3, CHEMICAL AND VOLUME CONTROL SYSTEM REACTOR MAKEUP CONTROL SYSTEM.
___18	**WHEN VCT level greater than 5%, THEN verify charging pump suction aligned to VCT.** VCT OUTLET ISO [] Q2E21LCV115C open [] Q2E21LCV115E open RWST TO CHG PUMP [] Q2E21LCV115B closed [] Q2E21LCV115D closed	

___Page Completed

Step	Action/Expected Response	Response NOT Obtained
___19	**Establish normal control of AFW system.**	
	19.1 Establish normal control of MDAFWP flow control valves using FNP-2-SOP-22.0, AUXILIARY FEEDWATER SYSTEM.	
	19.2 Verify MDAFWP flow control valve handwheels - FULLY BACKED OFF. (127 ft, AUX BLDG main steam valve room) MDAFWP TO 2A(2B,2C) SG [] Q2N23HV3227A [] Q2N23HV3227B [] Q2N23HV3227C	
	19.3 IF TDAFWP steam admission valves aligned to emergency air supply, THEN align normal air supply using FNP-2-SOP-62.0, EMERGENCY AIR SYSTEM.	
___20	**Align normal air supply to PRZR PORVs using FNP-2-SOP-62.1, BACK-UP AIR OR NITROGEN SUPPLY TO THE PRESSURIZER POWER OPERATED RELIEF VALVES.**	
___21	**Establish normal control of RCS TAVG.**	
	21.1 Align normal air supply to SG atmospheric relief valves using FNP-2-SOP-62.0, EMERGENCY AIR SYSTEM.	
	21.2 Verify SG atmospheric relief valve handwheels - IN NEUTRAL POSITION. (127 ft, AUX BLDG main steam valve room) 2A(2B,2C) MS ATMOS REL VLV [] Q2N11PV3371A [] Q2N11PV3371B [] Q2N11PV3371C	

___Page Completed

Step	Action/Expected Response	Response NOT Obtained
___22	Go to procedure and step in effect.	

****

CAUTION: Loss of instrument air will cause the RHR heat exchanger discharge valves to fail open. This can cause severe cavitation in the started RHR pump if operating at reduced inventory.

****

___23	IF unit in reduced inventory condition, THEN perform FNP-2-AOP-12.0, RESIDUAL HEAT REMOVAL SYSTEM MALFUNCTION in conjunction with this procedure.	
___24	Close CHG PUMPS TO REGENERATIVE HX Q2E21MOV8107 or Q2E21MOV8108.	
___25	IF required to limit RCS pressure or level rise, THEN stop CHG PUMP.	
___26	WHEN instrument air restored, THEN consult Operations Manager to evaluate plant status.	

-END-

TABLE 1

COMPONENT NUMBER	NAME	MANUAL OPERATOR	FAILED POSITION	OPERATOR DRAWING
Q2E21V339 (2-CVC-FCV-114A)	MAKEUP DILUTION TO VCT	NO	CLOSED	
Q2E21V340 (2-CVC-HV-8547)	BTRS BYPASS CONTROL	NO	OPEN	
Q2E21V341 (2-CVC-PCV-8157)	VCT HI PRESS VENT BACK PRESS REG	NO	CLOSED	
Q2E21V345 (2-CVC-FCV-114B)	REAC MKUP TO BLENDER	NO	CLOSED	
Q2E21V347 (2-CVC-FCV-122)	CHG FLOW REG	NO	OPEN	
Q2E21V350 (2-CVC-TCV-381B)	REHEAT HX BYPASS FCV	NO	OPEN	
Q2E21V351 (2-CVC-HCV-142)	RHR TO LTDN LINE	NO	CLOSED	
Q2E21V352 (2-CVC-PCV-145)	LTDN PRESS CONT VLV	NO	OPEN	
Q2E21V353 (2-CVC-TCV-143)	LTDN HI TEMP DIVERT	NO	FLOW TO VCT	
Q2E21V354 (2-CVC-FCV-113A)	BORIC ACID TO BLENDER	NO	OPEN	
Q2E21V356 (2-CVC-HV-8101)	VCT TO VENT HDR ISO	NO	CLOSED	
Q2E21V361 (2-CVC-TCV-250)	RHT INLET DEMIN AUTO DIVERT VLV	NO	FLOW TO REV FILL	
Q2E21V365 (2-CVC-LCV-115A)	VCT HI LEVEL DIVERT	NO	FLOW TO VCT	
Q2E21V366 (2-CVC-PCV-251)	RHT VENT ISO	NO	CLOSED	
Q2E21V367 (2-CVC-LCV-460)	LTDN LINE ISO	NO	CLOSED	
Q2E21V368 (2-CVC-LCV-459)	LTDN LINE ISO	NO	CLOSED	

TABLE 1

COMPONENT NUMBER	NAME	MANUAL OPERATOR	FAILED POSITION	OPERATOR DRAWING
Q2E21V246 (2-CVC-HV-8154)	EXCESS LETDOWN ISO	NO	CLOSED	
Q2E21V247 (2-CVC-HV-8153)	EXCESS LTDN ISO	NO	CLOSED	
Q2E21V248 (2-CVC-HV-8142)	REAC COOL PUMP SEAL WATER BYPASS	NO	CLOSED	
Q2E21V250 (2-CVC-HV-8143)	EXCESS LTDN DIVERT	NO	FLOW TO VCT	
Q2E21V253A (2-CVC-HV-8149A)	LTDN ORIF ISO VLV 45 GPM	NO	CLOSED	
Q2E21V253B (2-CVC-HV-8149B)	LTDN ORIF ISO VLV 60 GPM	NO	CLOSED	
Q2E21V253C (2-CVC-HV-8149C)	LTDN ORIF ISO VLV 60 GPM	NO	CLOSED	
Q2E21V256A (2-CVC-HV-8141A)	REAC COOL PMP 2A SEAL LEAKOFF	NO	OPEN	
Q2E21V256B (2-CVC-HV-8141B)	REAC COOL PMP 2B SEAL LEAKOFF	NO	OPEN	
Q2E21V256C (2-CVC-HV-8141C)	REAC COOL PMP 2C SEAL LEAKOFF	NO	OPEN	
Q2E21V284 (2-CVC-HV-8152)	LTDN LINE CTMT ISO	NO	CLOSED	
N2E21V313 (2-CVC-HCV-947)	HYDRO TEST PUMP DISCH	NO	OPEN	
N2E21V322 (2-CVC-HV-8155)	VCT N2 SUPP REG	NO	CLOSED	
N2E21V323 (2-CVC-PCV-8156)	VCT H2 SUPP REG	NO	CLOSED	
Q2E21V332 (2-CVC-HCV-186)	SEAL WATER INJ FLOW CONT	NO	OPEN	
Q2E21V337 (2-CVC-FCV-113B)	MAKEUP TO CHG PMP HDR	NO	CLOSED	

TABLE 1

COMPONENT NUMBER	NAME	MANUAL OPERATOR	FAILED POSITION	OPERATOR DRAWING
Q2P17HV3443 (2-CCW-HV-3443)	CCW FROM EXC LTDN/RCDT HX'S	YES	CLOSED	
Q2P17RCV3028 (2-CCW-RCV-3028)	CCW SURGE TANK AIR VENT	YES	CLOSED	
Q2P17TCV3083 (2-CCW-TCV-3083)	LTDN HX CCW TEMP CONTROLLER	YES	OPEN	
N2P17V177 (2-CVC-FCV-307)	CCW FROM REV EVAP COND	NO	OPEN	
N2P17V178 (2-CCW-FCV-329)	CCW FROM WEV EVAP COND	NO	OPEN	
N2P18HV2935A	BREATHING AIR SUP CYLINDER ISO		OPEN	
N2P18HV2935B	BREATHING AIR HEADER AUTO ISO		CLOSED	
Q2P19HV3611 (2-IA-HV-3611)	INST AIR SUPPLY TO CTMT	YES	CLOSED	
N2P19HV3825 (2-IA-HV-3825)	INST AIR TO PENE RM AUTO ISO	YES	CLOSED	
N2P19HV3885 (2-IA-HV-3885)	INST AIR TO PENE RM AUTO ISO	YES	CLOSED	
Q2P19V006 (2-IA-HV-2228)	BACKUP IA TO CTMT VLV	NO	CLOSED	
N2P19V901	SERVICE AIR HDR AUTO ISO	YES	CLOSED	
N2P19V902	AIR DRYER AUTO BYPASS	YES	OPEN	
N2P19V903	ESSENTIAL IA HDR AUTO ISO	YES	OPEN	
N2P20LCV3434 (2-AS-LCV-3434)	AS CONDENSATE TANK LCV	YES	CLOSED	
N2P20PCV3430	PLANT HW HX TCV	YES	CLOSED	
N2P20PCV3433	PLANT HW HX TCV	YES	CLOSED	
N2P20TCV3831 (2-MS-TCV-3831)	DEMIN WATER TO DESUPERHEATER CONT VLV	YES	CLOSED	
N2P20V521	SJAE FROM AUX STEAM	NO	CLOSED	

FARLEY NUCLEAR PLANT
UNIT 1
SYSTEM OPERATING PROCEDURE SOP-62.0

EMERGENCY AIR SYSTEM

1.0 Purpose

This procedure provides the Initial Conditions, Precautions, Limitations, and Instructions for operation of the Emergency Air System. Instructions are included in the following sections:

4.1 Placing the Emergency Air System in Operation

4.2 Removing the Emergency Air System from Operation

4.3 Manual-Electric Operation of Steam Generator Atmospheric Relief Valves

4.4 Local Pneumatic Operation of Steam Generator Atmospheric Relief Valves

4.5 Placing the Breathing Air System in Operation

4.6 Removing the Breathing Air System from Operation

4.7 Supplying Emergency Air to TDAFW Pump Steam Supply Valves

4.8 Selection of Operating Mode for Emergency Air Compressors

2.0 Initial Conditions

2.1 The electrical distribution system is energized and aligned for normal operation per FNP-1-SOP-36.0, PLANT ELECTRICAL DISTRIBUTION LINE-UP, with exceptions noted.

2.2 The emergency air system valves and electrical distribution system are aligned per System Check List FNP-1-SOP-62.0A and FNP-1-SOP-62.0B, with exceptions noted.

3.0 Precautions and Limitations

3.1 Do not exceed RCS cooldown limits specified in the Technical Specifications.

3.2 Open air valves slowly to allow pressure to equalize gradually.

4.0 Instructions

CAUTION: Atmospheric reliefs will start to open at 24 ± 2 psig and will be full open at 45 psig. Observe local air supply pressure gauge N1P18PI2872AB (BB,CB). IF the atmospheric relief is full open, THEN Tech Spec cooldown limits may be exceeded.

NOTE: The compressors are rated at 41.6 Ft^3/min at 100 psig.

4.1 Placing the Emergency Air Compressors in Operation

4.1.1 Place emergency air compressor 1A hand switch in ON.

4.1.2 Place emergency air compressor 1B hand switch in ON.

4.1.3 With power available to MCB controllers PC 3371A (B,C) proceed to step 4.3. With no power available, proceed to step 4.4.

4.2 Removing the Emergency Air Compressors from Operation

4.2.1 Place emergency air compressor 1A hand switch in OFF.

4.2.2 Place emergency air compressor 1B hand switch in OFF.

4.3 Manual-Electric Operation of Steam Generator Atmospheric Relief Valves

4.3.1 Place the emergency air compressors in operation per step 4.1.

4.3.2 Open emergency air header isolation valve N1P18V073A, N1P18V073B and N1P18V073C.

4.3.3 Open emergency air header to normal air header cross connect valve N1P18V074A, N1P18V074B and N1P18V074C.

4.3.4 Operate steam generator atmospheric reliefs from the main control board using controllers PC 3371A (B,C).

4.3.5 With normal air supply available, remove the emergency air compressors from operation per step 4.2.

4.3.6 Close emergency air header to normal air header cross connect valve N1P18V074A, N1P18V074B and N1P18V074C.

4.3.7 Close emergency air header isolation valve N1P18V073A, N1P18V073B and N1P18V073C.

4.4 Local Pneumatic Operation of Steam Generator Atmospheric Relief Valves

4.4.1 Place the emergency air compressors in operation per step 4.1.

4.4.2 Opening Atmospheric Relief Valve 1A (B,C)

4.4.2.1 Verify emergency air header iso valve N1P18V073A(B,C) closed.

4.4.2.2 IF DC power is available to solenoid 1-MS-SV-3371AB (BB,CB), THEN place local hand switch 1-MS-HS-3371AB (BB,CB) in OPEN.

IF DC power is NOT available, THEN place 1-MS-HS-3371AB (BB,CB) in CLOSE and open solenoid 1-MS-SV-3371AB (BB,CB) with its manual actuator.

4.4.2.3 Slowly throttle open emergency air header iso valve N1P18V073A (B,C) while observing air supply pressure. Observe caution statement above step 4.1. IF necessary to reduce air supply pressure, THEN open manual vent valve N1P18V098A (B,C) downstream of solenoid 1-MS-SV-3371AB (BB,CB).

4.4.3 Closing Atmospheric Relief Valve 1A (B,C)

4.4.3.1 Place local hand switch 1-MS-HS-3371AB (BB,CB) in AUTO.

4.4.3.2 Close emergency air header iso valve N1P18V073A (B,C).

4.4.3.3 Observe local N1P18PI2872AB (BB,CB) to ensure that air is vented off the atmospheric relief.

4.4.3.4 Close emergency air header vent valve N1P18V098A (B,C).

4.4.3.5 IF solenoid valve 1-MS-SV-3371AB (BB,CB) was opened with its manual actuator, THEN close the manual actuator.

4.4.3.6 IF emergency air is no longer required, THEN secure compressors per step 4.2.

4.5 Placing the Breathing Air System in Operation

4.5.1 Ensure that the Service Air System is aligned per System Checklist FNP-1-SOP-31.1A, SERVICE AIR SYSTEM.

4.5.2 Unlock and open N1P18V062, Service Air Isolation to Penetration Rooms (in Main Steam Valve Room). (Key Z-218)

4.5.3 Verify CTMT BRTHG AIR SUPP N1P18HV2935A/B/C in the SA AIR HDR position.

NOTE:

- **Alarms at PSL-2935 (Emergency Air Pressure Low) or ASH (CO Monitor High) can cause valves N1P18HV2935A and B to be out of position. See BOP annunciator NA4.**
- **N1P18HV2935C is required to be open for Service Air to CTMT and not if Breathing Air only is required.**

4.5.4 Verify that N1P18HV2935B and N1P18HV2935C indicates OPEN, and N1P18HV2935A indicates CLOSED. Do not proceed until the system is aligned this way.

4.5.5 Unlock and slowly open S.A. to CTMT hdr inlet iso Q1P18V001 (100' El rad side, piping penetration room). (Key Z-231)

4.5.6 Unlock and slowly open S.A. to CTMT iso Q1P18V002 (105' El CTMT, behind elevator). (Key Z-278)

4.5.7 Have Health Physics verify the operability of the air purifiers per FNP-1-RCP-112, OPERATION OF THE CONTAINMENT BREATHING AIR SYSTEM.

4.5.8 Open the compressed breathing air bottle isolation valves and set 1-BA-PCV-2936A to 1000 psi and 1-BA-PCV-2936B to 100psi.

4.6 Removing the Breathing Air System from Operation

4.6.1 Close and lock Breathing Air inside CTMT isolation valve Q1P18V002 (105 El CTMT, behind elevator). (Key Z-278)

4.6.2 Close and lock Breathing Air outside CTMT isolation valve Q1P18V001 (100' El rad side, piping penetration room). (Key Z-231)

4.6.3 Close compressed breathing air bottle isolation valves.

4.6.4 Close and lock the Service Air to penetration rooms isolation valve N1P18V062 (in Main Steam Valve Room). (Key Z-218)

4.7 Supplying Emergency Air to TDAFW Pump Steam Supply Valves

4.7.1 Place the emergency air compressors in operation per Step 4.1.

4.7.2 Open N1P18V095A and N1P18V095B, emergency air supply to TDAFWP steam supply valves.

4.7.3 WHEN normal air supply available, THEN remove emergency air compressors from operation per step 4.2.

4.7.4 Close N1P18V095A and N1P18V095B, emergency air supply to TDAFWP steam supply valves.

4.8 Selection of Operating Mode for Emergency Air Compressors

NOTE: The preferred Mode of Operation for the Emergency Air Compressors is the Constant Speed Control Mode.

4.8.1 To select the Constant Speed Control mode of operation, screw the selector knob on the auxiliary valve fully out (see Figure 1). This will allow the compressor to run continuously and load or unload as governed by the auxiliary valve.

4.8.2 To select the Auto Start and Stop mode of operation, screw the selector knob on the auxiliary valve fully in (see Figure 1). This allows the compressor to start and stop as controlled by pressure switch PS-1A.

5.0 References

5.1 Drawings: D-175034, D-175035, D-175159
5.2 FSAR Chapter 10.3.8
5.3 FNP-1-ARP-3.2
5.4 FNP-1-RCP-112

FIGURE 1

LOCATION OF MAJOR COMPONENTS

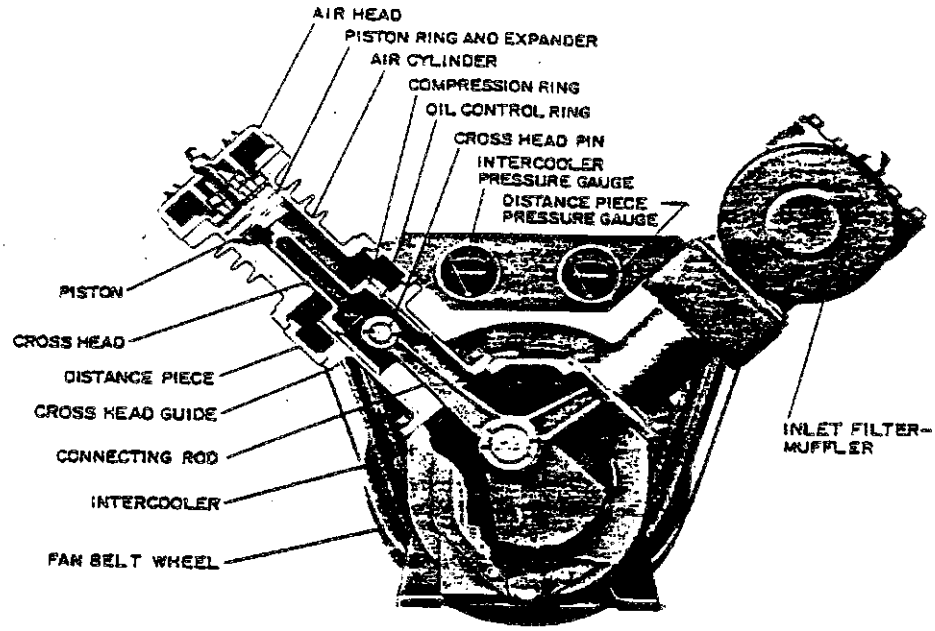

5T2NL Compressor - Cut-away View.
(The 10T3NL, though of 3-cylinder design, is similarly constructed.)

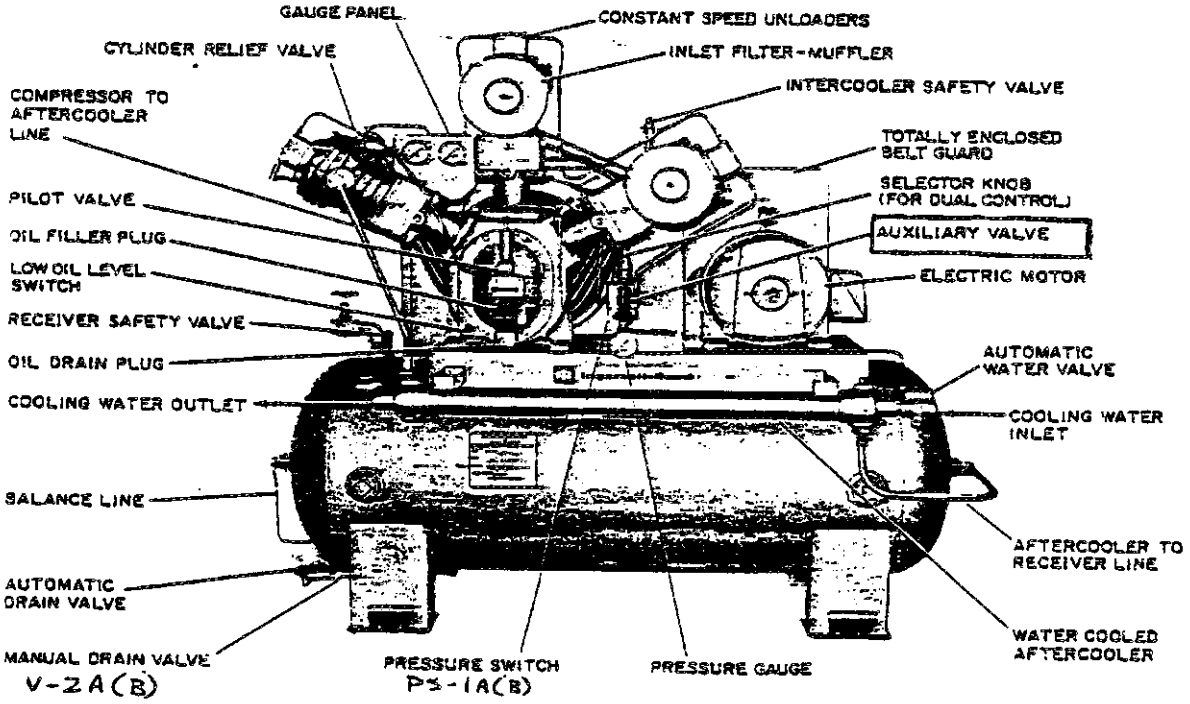

Receiver Mounted 10T3NL Compressor with Accessories.

071K5.04 001/2/2/WASTE GAS/MEM 2.5/3.1/NEW/FA011005/RO/

The Shift Chemist has determined that oxygen concentration levels are 3.5% in the Waste Gas System. Which one of the following is required to be accomplished IAW SOP-51.0, Waste Gas System, to prevent an unsafe condition?

A. Dilute with nitrogen and transfer the smaller WGDT to #7 or #8 WGDT for further sampling.

B. Dilute with nitrogen and vent the WGDT to the plant vent stack per SOP-51.1, Waste Gas System Gas Decay Tank Release.

C. Place the waste gas compressor in service and dilute by combining the WGDT with another WGDT that has a lower oxygen concentration.

D. Transfer the smaller WGDT to #7 or #8 WGDT and vent the WGDT to the plant vent stack per SOP-51.1, Waste Gas System Gas Decay Tank Release.

Due to the question for KA 004K5.49 on this exam, this question was asked in the oxygen realm to prevent giving the answer or tips for that question. The words flammable and explosive mixture were avoided as well and the word hydrogen was avoided to keep from drawing the 2 questions together. The candidate will have to either take the unsafe condition at face value or know what the unsafe condition is. The operational implications of too high an oxygen level is to dilute and get rid of the WGDT contents to prevent a flammable mixture.

A. Incorrect - Diluting with nitrogen is correct but then the correct action is to get rid of it, not store it for future problems.

B. Correct - **Dilute with nitrogen and vent the WGDT to the plant vent stack per SOP-51.1, Waste Gas System Gas Decay Tank Release.**
This will bring the flammable concentration down and the get it out of the tank to prevent a future high O2 concetration. This is done to prevent a flammable mixture of O2 to H2 IAW SOP-51.

C. Incorrect - This is not a correct action but the candidate may believe this would dilute it and allow for a safer environment.

D. Incorrect - There is no need to transfer this from a smaller tanl to the larger holding tanks for future disposal.

Reference:CFR: 41.5 / 45.7
TR 13.12.3, Waste Gas Monitoring Lesson plan
This technical requirement states that the concentration of oxygen in any portion of the gaseous radwaste treatment system shall be limited to < or equal to **2%** by volume whenever the hydrogen concentration in that portion of the gaseous radwaste treatment system exceeds 4% by volume and the hydrogen and oxygen monitors required by TR 13.12.1 are operable. If the hydrogen and oxygen monitors required by TR 13.12.1 are operable and the concentration of oxygen in the gaseous radwaste treatment system >2% by volume but < or equal to 4% by volume, then reduce oxygen concentration to within limits within 48 hours.

SOP-51.0 P&L
3.11 Gas decay tanks with O_2 levels greater than the required limits should be diluted with N_2 and purged to the plant vent in accordance with FNP-1-SOP-51.1, WASTE GAS SYSTEM GAS DECAY TANK RELEASE, until O_2 level is within limits.

071K5.04 Waste Gas Disposal - Knowledge of the operational implication of the following concepts as they apply to the Waste Gas Disposal System.
Relationship of hydrogen/oxygen concentrations to flammability.

Identify any special considerations such as safety hazards and plant condition changes that apply to the Waste Gas System (OPS52106B04).

3.8 Ensure waste gas compressor separators are blowndown daily to prevent rust accumulation and ultimate seal failure.

3.9 IF waste gas processing system flow is interrupted AND flow can NOT be immediately restored, THEN the on service recombiner analyzers should be verified de-energized either automatically on low flow (<1800 SCFH) or manually.

3.10 WHEN valving in the CVCS RHT eductor, THEN the eductor isolation must be throttled to prevent exceeding the capacity of the operating waste gas compressor. The waste gas system must be aligned to the low pressure mode for this operation.

3.11 Gas decay tanks with 0_2 levels greater than the required limits should be diluted with N_2 and purged to the plant vent in accordance with FNP-1-SOP-51.1, WASTE GAS SYSTEM GAS DECAY TANK RELEASE, until 0_2 level is within limits.

3.12 The 0_2 concentration in the waste gas system should be limited to (refer to TR 13.12.3 if these values are exceeded):

- ≤ 2% by volume whenever H_2 concentration exceeds 4% by volume and the hydrogen and oxygen monitors required by TR 13.12.1 are OPERABLE;

OR

- ≤ 1% by volume whenever H_2 concentration exceeds 4% by volume and the hydrogen and oxygen monitors required by TR 13.12.1 are not OPERABLE.

3.13 Never leave recombiner unattended when abnormal H_2 or 0_2 concentrations exist.

3.14 Never place 0_2 supply valve controller in AUTO during severe transient recombiner operating conditions.

3.15 Recombiner catalyst bed temperature must never exceed 950°F. Decreasing 0_2 supply to recombiner will lower bed temperatures.

3.16 Range three (3) of HAIC-1118 controller, although not calibrated, may be used for indication purposes during high H_2 concentration conditions.

3.17 Operator may leave a recombiner unattended for no more than 30 minutes while manually recovering from a high H_2 condition providing conditions are stable enough to leave unattended.

3.18 The Recombiner oxygen pressure regulator should be set for 5-10 psi greater than skid pressure. Care should be exercised in adjusting O_2 regulator as it directly affects the control stability of the recombiner.

55. 076G2.1.23 001/1/2/HIGH RCS ACTIVITY/MEM 3.9/4.0/BANK/FA011005/RO/CVR

Sample results show that an RCS crud burst has caused gross activity to increase significantly.

Which one of the following actions would best reduce this activity level IAW AOP-32.0, High Reactor Coolant Activity?

A. Valve in the cation demineralizer AND reduce letdown flow rate to 45 gpm.

B. Valve in the standby mixed bed demineralizer AND increase letdown to 120 gpm.

C. High activities from crud bursts cannot be removed by ion exchange; a power reduction is required.

D. Divert letdown around the CVCS demineralizers in order to maximize the fission product input to the waste gas system via VCT purge flow.

A. Incorrect. The Mixed Bed Demin is used per AOP-32.0, not the Cation bed.

B. Correct. **Valve in the standby mixed bed demineralizer AND increase letdown to 120 gpm.**
This is directed by AOP-32.0 to maximize the removal rate of the high activity fission products.

C. Incorrect. Ion exchange is the prefered method by which to remove the crud burst activation products. A power reduction is required only if the high RCS activity is due to failed fuel, and the GFFD is reading >1e5 above normal background.

D. Incorrect. Divert letdown around the CVCS demineralizers would prevent the removal of the particulate contaminants. VCT purge flow is increased if the Waste Gas system is in service.

076: High Reactor Coolant Activity
2.1 Conduct of Operations 2.1.23 Ability to perform specific system and integrated plant procedures during all modes of plant operation. RO 3.9

9. Evaluate abnormal plant or equipment conditions associated with the Gross Failed Fuel Detector and determine the integrated plant actions needed to mitigate the consequence of the abnormality (OPS52106E12).

7. Evaluate plant conditions and determine if transition to another section of AOP-32.0 [HIGH REACTOR COOLANT ACTIVITY] or to another procedure is required (OPS52521J08).

AOP-32.0-52521J06 02

FARLEY NUCLEAR PLANT

ABNORMAL OPERATING PROCEDURE

FNP-1-AOP-32.0

HIGH REACTOR COOLANT ACTIVITY

PROCEDURE USAGE REQUIREMENTS-per FNP-0-AP-6	SECTIONS
Continuous Use	
Reference Use	ALL
Information Use	

SAFETY RELATED

004

Approved:

Operations Manager

Date Issued: 4-12-99

A. Purpose

This procedure provides actions for response to high activity in the reactor coolant system.

This procedure is applicable in Modes 1, 2, 3, 4 and 5.

B. Symptoms or Entry Conditions

1. This procedure is entered when high reactor coolant activity is indicated by any of the following:

   a. Reactor coolant sample results

   b. Gross failed fuel detector indication greater than 4×10^4 cpm above normal

Step	Action/Expected Response	Response NOT Obtained
___ 1	Direct Chemistry to sample RCS for activity using FNP-0-CCP-1300, CHEMISTRY AND ENVIRONMENTAL ACTIVITIES DURING A RADIOLOGICAL ACCIDENT.	
___ 2	Check gross failed fuel detector indication - LESS THAN 10^5 cpm ABOVE NORMAL.	2 Reduce reactor power by 25% from existing power level.
___ 3	<u>WHEN</u> RCS activity determined, <u>THEN</u> evaluate continued plant operation using Technical Specification 3.4.9 {3.4.16}.	
___ 4	Direct HP to survey AUX BLDG for radiation level.	
___ 5	Direct Chemistry to sample all SGs for activity.	
___ 6	Direct Chemistry to sample affected effluent paths.	
7	<u>IF</u> elevated RCS activity <u>NOT</u> caused by failed fuel, <u>THEN</u> reduce RCS activity.	7 Consult Operations Manager to evaluate further plant response.

NOTE: Placing the standby mixed bed demineralizer in service will reduce RCS lithium concentration.

7.1 Align standby mixed be demineralizer for service using FNP-1-SOP-2.5, RCS CHEMICAL ADDITION, VCT GAS CONTROL AND DEMINERALIZER OPERATION.

7.2 Direct Chemistry to sample demineralizer inlet and outlet at least once per 4 hours.

7.3 Raise letdown flow to 120 gpm.

Step 7 continued on next page.

___Page Completed

Step	Action/Expected Response	Response NOT Obtained
	7.4 IF waste gas system in service, THEN raise VCT purge flow to 1.2 SCFM.	7.4 Evaluate the need to place the waste gas system in service.
___ 8	Evaluate the need to place CTMT SUMP PUMPs Q1G21P019A(B) in PULL-TO-LOCK.	
___ 9	Evaluate the need to secure the zinc addition system (ZAS).	
___10	WHEN RCS activity restored to normal, THEN go to procedure and step in effect.	

-END-

Unit 2 Plant Data Display Report

Group Review

Point Name	Point Description	Value	Units
RE0002	CTMT AREA MONITOR	1.42E-02	R/HR
RE0007	CTMT INCORE SEAL AREA MONITOR	1.04E-04	R/HR
RE0027A	CTMT RADIATION HIGH LEVEL CHAN A	9.55E-01	R/HR
RE0027B	CTMT RADIATION HIGH LEVEL CHAN B	9.30E-01	R/HR
RE0010	PENE ROOM FILT PARTICLE MONITOR	392.20	CPM
RE0011	CTMT AIR PARTICULATE MONITOR	486.50	CPM
RE0012	CTMT GAS MONITOR	21.68	CPM
RE0013	WASTE GAS PROCESSING MONITOR	16.67	CPM
RE0014	VENT GAS MONITOR	282.90	CPM
RE0017A	COMPONENT COOLING WATER MONITOR	16.45	CPM
RE0017B	COMPONENT COOLING WATER MONITOR	19.29	CPM
RE0018	WASTE DISPOSAL LIQUID MONITOR	2,097.00	CPM
RE0019	SG BLOWDOWN SAMPLE MONITOR	32.54	CPM
RE0020A	SW FROM CTMT CLR TRN A MONITOR	18.21	CPM
RE0020B	SW FROM CTMT CLR TRN B MONITOR	36.82	CPM
RE0021	VENT AIR PARTICLE MONITOR	260.30	CPM
RE0022	VENT GAS MONITOR	57.20	CPM
RE0023A	SG BLOWDOWN TREATMENT MONITOR	155.60	CPM
RE0023B	SG BLOWDOWN TREATMENT MONITOR	27.78	CPM
RE0024A	CTMT PURGE MONITOR	155.80	CPM
RE0024B	CTMT PURGE MONITOR	145.70	CPM
RE0025A	SPENT FUEL POOL AREA MONITOR	58.37	CPM
RE0025B	SPENT FUEL POOL AREA MONITOR	71.60	CPM
RE0050	GROSS FAILED FUEL DETECTOR	31.03	CPM

Normal GOOD reading

AOP-32.0

HIGH REACTOR COOLANT ACTIVITY

PURPOSE

This procedure provides guidance for reactor coolant activity increases caused by failed fuel or other causes such as chemically induced crud bursts. This procedure addresses operator actions in response to high reactor coolant activity. These actions are performed in order to monitor and limit the amount of radiation released to the environment, thereby reducing the dose rates at the site boundary.

ENTRY CONDITIONS

Indication of high activity on the gross failed fuel detector (GFFD) $4x10^4$ cpm above normal count level or a reactor coolant sample analysis indicating high activity from chemistry will require entry into this procedure.

During reactor operation, a portion of the reactor coolant flows through the GFFD. If the fuel cladding develops a leak, some of the fission products are released into the reactor coolant system (RCS). The GFFD counts the number of delayed neutrons emitted by radioactive fission products in the reactor coolant, and the count rate displays continuously in the control room. If an increase in the neutron count rate is detected, an alarm will sound on the main control board (MCB), warning the operator of a possible fuel cladding failure.

STEP DESCRIPTION

Request Sample

This step prompts the operator to request an RCS sample to provide a backup to either the GFFD alarm or the results of the first sample if this was the first symptom of increased activity.

Check GFFD

This step requires a 25% power reduction if the GFFD abruptly exceeds $1x10^5$ cpm above the normal count level. This count rate was picked because it is high enough to prevent spurious

alarms caused by transient conditions, such as power excursions or spurious alarms due to fluctuations in the flow rate through the GFFD. In other words, if $1x10^5$ cpm above the normal count level is reached, failed fuel is the most probable cause. The resultant power reduction reduces the fuel temperature and also reduces the amount of fission products produced.

Refer to Technical Specifications

This step reminds the operator to look at Technical Specifications to determine if a limited condition for operation (LCO) exists based on the reactor coolant sample analysis.

Direct HP to Survey Auxiliary Building

Determines if high RCS activity has affected radiation levels in the Auxiliary building.

Direct Chemistry to Sample SGs

Determines whether or not radioactivity from the reactor coolant system is entering the steam generators.

Direct Chemistry to Sample Effluent Paths

Determines whether or not the high activity in the reactor coolant system is being released to the environment.

Consult Operations Manager

If high RCS activity is caused by failed fuel, the Operations Manager is consulted to evaluate continued plant response. Depending upon the extent of the problem, it may not be advisable to move more highly radioactive water into the Auxiliary Building.

Reduce RCS Activity

If the high RCS activity is not caused by failed fuel, the standby mixed bed demineralizer is placed in service and letdown flow is increased. Note: These steps will also help to reduce activity levels due to failed fuel if it is decided to continue this course of action by the Operations manager.

A note cautions that placing the standby demineralizer in service will reduce the RCS Lithium concentration. Reducing the Lithium concentration will lower reactor coolant pH. Chemistry is notified to check RCS chemistry at least once per 4 hours. In addition, the new cation resin in the standby mixed bed demineralizer will remove Cesium, a fission product, as well as Lithium.

Increasing letdown flow reduces the time required to remove radioactivity from the reactor coolant. The purification half-life of the reactor coolant system, assuming 100% removal by the demineralizer, is inversely proportional to the letdown flow. $P_{1/2} = \frac{0.693(m_{RCS})}{\dot{m}_{letdown}}$

Increase Purge Flow to the Waste Gas System

Refer to Figure 1. The increased letdown flow will transfer fission gasses to the VCT more rapidly. This step increases the gas removal rate from the volume control tank (VCT), and will reduce the reactor coolant activity by transferring the fission product gasses to the gas decay tanks. Currently, the Catalytic Hydrogen Recombiners are out of service, and have not been utilized in a number of years. Thus a continuous VCT purge flow is not maintained at this time.

Check Containment Sump Pumps

Evaluate the need to place containment sump pumps in pull-to-lock. Minimizes the transport of radioactive fluids to the waste system.

Check Zinc Addition and Monitoring System

Evaluate the need to secure the zinc addition and monitoring system.

Go To Procedure and Step In Effect

When RCS activity is restored to normal, go to the procedure and step in effect.

EIP POTENTIAL NOTIFICATION

Notification of Unusual Event

A NOUE should be declared if the RCS activity exceeds Technical Specification action limits for gross specific activity ($\leq 100/\bar{E}$ μCi/gm) or dose equivalent iodine (= T.S. Fig 3.4.16-1 20% limit)

Alert

An Alert should be declared if the RCS dose equivalent iodine activity is > 300 μCi/gram.

Site Area

A Site Area Emergency should be declared if the RCS activity is > 300 μCi/gram dose equivalent I-131 **with** potential excessive RCS leakage **or** potential loss of containment.

General

A General Emergency should be declared if two of the three fission product barriers are lost with a potential loss of the third **and** fuel clad damage is indicated by RCS activity > 300 μCi/gram dose equivalent I-131.

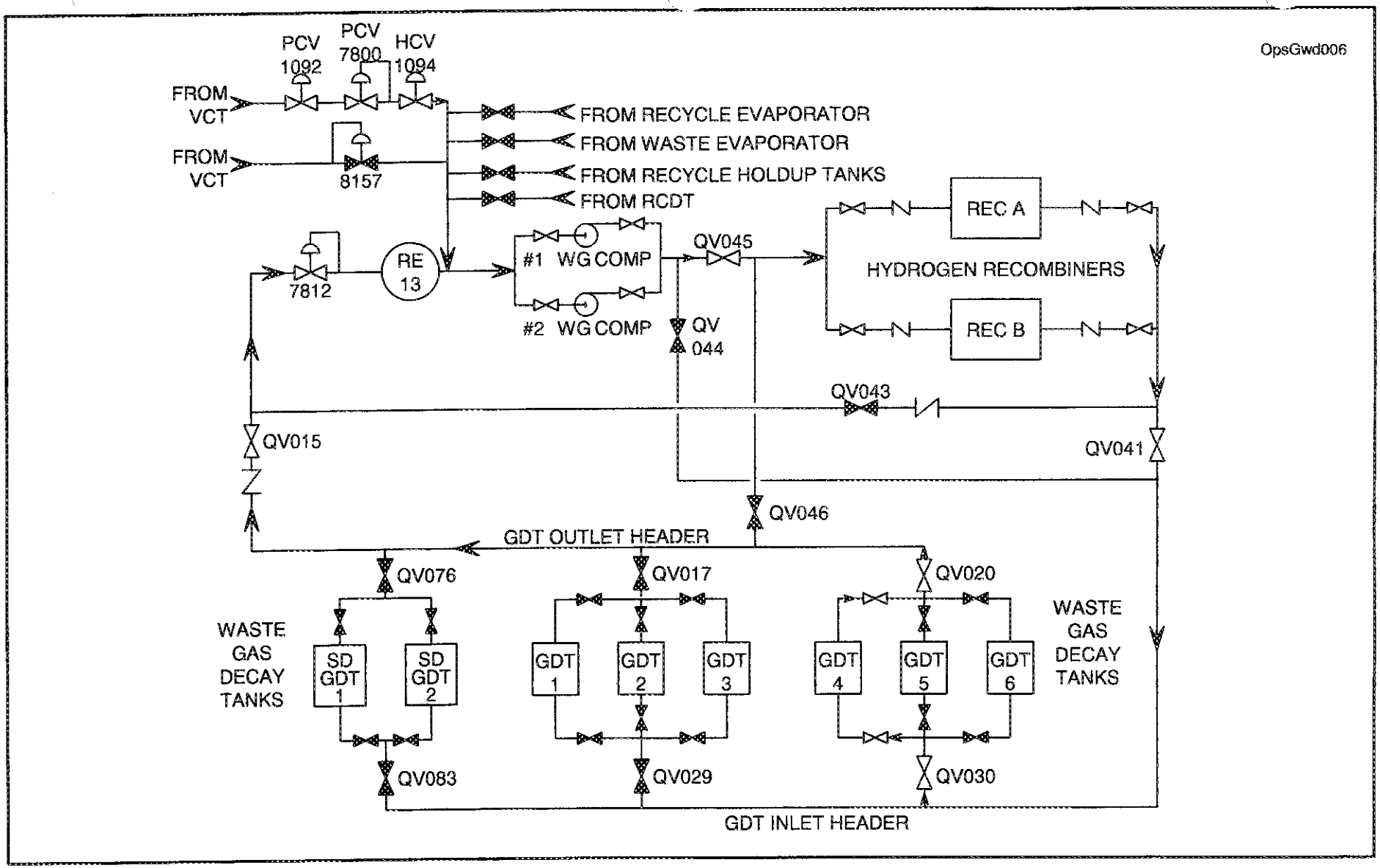

Waste Gas System: Low-Pressure Mode

Figure 1

56. 076K3.07 001/2/1/AOP-10/C/A 3.7/3.9/NEW/FA011005/RO/

Given the following on Unit 2:

- 2B D/G is running and the Shift Supervisor has determined that it is required.
- Unit 2 is in Mode 6 with the core unloaded to the SFP.
- B Train SFP cooling is on service.
- B Train Service Water has been lost and can not be restored.

Which ONE of the following describes when the affected D/G is required to be stopped IAW AOP-10.0, Loss of Service Water, and what engineered safeguards feature (ESF) loads will be affected by the event in progress?

A. If the local Lube Oil temperature alarm cannot be maintained clear to protect the D/G from damage due to overheating, 2A SFP pump and heat exchanger will be affected.

B. If the local Lube Oil temperature alarm cannot be maintained clear to protect the D/G from damage due to overheating, 2B SFP pump and heat exchanger will be affected.

C. Immediately, since SW cannot be restored to protect the D/G from damage due to overheating, 2A SFP pump and heat exchanger will be affected.

D. Immediately, since SW cannot be restored to protect the D/G from damage due to overheating, 2B SFP pump and heat exchanger will be affected.

Ref: AOP-10.0

A - Correct -**If the local Lube Oil temperature alarm cannot be maintained clear to protect the D/G from damage due to overheating, 2A SFP pump and heat exchanger will be affected.**
Step 4.2.6 says that if the LO temp alarm cannot be cleared then Stop the D/G. This is the correct ESF load that would be affected in that the SFP cooling trains are reversed 2A SFP train is B Train and it has lost both SW flow and will lose power as well.This is a HU Perf issue and challenge for our Plant.

B - Incorrect; Step 4.2.6 says that if the LO temp alarm cannot be cleared then Stop the D/G. However this is the incorrect train of ESF load that is affected.

C - Incorrect-AOP-10 has the operator isolate SW to the TB and other components as well as line-up SW flow from the other unit first.This is the correct ESF load that would be affected in that the SFP cooling trains are reversed 2A SFP train is B Train and it has lost both SW flow and will lose power as well.

D - Incorrect- AOP-10 has the operator isolate SW to the TB and other components as well as line-up SW flow from the other unit first. This is the incorrect train of ESF load that is affected.

Step	Action/Expected Response	Response NOT Obtained
		4.2.6 IF unable to maintain running diesel generator(s) lube oil temperature alarm (155' DG BLDG local control panel) clear. THEN stop affected diesel generator.

076K3.07 Service Water - Knowledge of the effect that a loss or malfunction of the SWS will have on the following: ESF loads.

Evaluate abnormal plant or equipment conditions associated with the Service Water System and determine the local actions needed to mitigate the consequence of the abnormality (OPS40101B12).

Describe the effect on the service water of a loss of an AC or DC bus or instrument air (OPS40101B06).

List all the engineered safety system (ESS) loads supplied by the component cooling water (CCW) system (OPS40204A13).

Step	Action/Expected Response	Response NOT Obtained
	NOTE: The loss of Service Water to the Turbine Building could be unisolable and would affect both trains of Service Water. The intent of Step 4.2 RNO is to allow isolation of an affected train if possible. If both trains are affected then the Turbine Building must be isolated and the turbine generator removed from service.	
	4.2 IF diesel generator NOT required, THEN secure diesel generator using ATTACHMENT 1.	4.2 Perform the following SW isolations. 4.2.1 Isolate SW on the affected train(s) to the turbine building. Close A TRN SW TO TURB BLDG ISO valves. [] Q2P16V515 [] Q2P16V516 (B trn elect) Close B TRN SW TO TURB BLDG ISO valves. [] Q2P16V514 [] Q2P16V517 (A trn elect) Close A TRN SW FROM TURB BLDG HDR ISO valves. [] Q2P16V540 [] Q2P16V542 VOLTAN Close B TRN SW FROM TURB BLDG HDR ISO valves. [] Q2P16V541 [] Q2P16V543

Step 4 continued on next page.

___Page Completed

Step	Action/Expected Response	Response NOT Obtained
		4.2.6 IF unable to maintain running diesel generator(s) lube oil temperature below the alarm(155' DG BLDG local control panel) THEN perform the following. 4.2.6.1 For shared diesel generators verify Unit 1 Service Water aligned.
NOTE:	No evaluation has been performed to demonstrate that the Unit 1 'B' Train Service Water System is capable of supplying the cooling requirements for 1B and 2B diesel at the same time.	
		4.2.6.2 IF Unit 1 SW is available for 2B diesel generator, THEN align Unit 1 SW supply to 2B diesel generators. 2B DIESEL GENERATOR SW SUPP TO/FROM UNIT 1(UNIT 2) [] Q1P16V592/593 open [] Q2P16V592/593 closed 4.2.7 IF unable to maintain running diesel generator(s) lube oil temperature alarm clear (155' DG BLDG local control panel) THEN stop affected diesel generator.using ATTACHMENT 1.
___ 5	**Verify all available SW PUMPs in non affected train - STARTED.**	

___Page Completed

TABLE 3
POWER SUPPLIES

COMPONENT	SUPPLY	EMERGENCY DIESEL	TRANSFORMER	
			NORMAL	ALTERNATE
Spent fuel pool pump A (B Train)	600V LC C	B Train Diesel *	S/U B	U/A A
Spent fuel pool pump B (A Train)	600V LC A	A Train Diesel *	S/U A	U/A A
Spent fuel pool skimmer pump	600V MCC C	B Train Diesel *	S/U B	U/A A
Refueling water purification pump - Unit 1	600V MCC D	None	S/U A	U/A A
Refueling water purification pump - Unit 2	600V MCC C	B Train Diesel *	S/U B	U/A A
Boric acid recovery system feed booster pump	Temporary Power Connection			
Boric acid recovery system feed pump	Temporary Power Connection			

* The supply breakers will load shed on an LOSP and will not auto reclose. They can be manually reclosed after adequate DG capacity is verified.

SFP temperature within specifications. Normally, CCW flow through a SFP heat exchanger should be limited to a maximum flow of 3100 gpm to prevent damage to the heat exchanger due to flow induced vibration in the U-bend region of the heat exchanger (REA 99-2171). Flows in excess of 3100 gpm are acceptable for short periods of time for surveillance testing. Supply to each of two SFP heat exchangers is isolated by MOV-3094A and B.

A pressure relief valve in the discharge line is sized to relieve the expansion occurring if the shell side was isolated and the spent fuel pool (SFP) water flowing through the tube side was not isolated.

Charging Pumps

The three charging pumps are supplied with CCW to cool their lubricating oil (Figure 4). Cooling for the bearing oil and gear oil coolers must be supplied during pump operation to keep lube oil and gear oil temperature from exceeding 165°F. Cooling water temperatures below 60°F can potentially cause condensation in the lube oil system, resulting in corrosion of the lube oil system wetted components and subsequent bearing damage. Westinghouse has recommended periodic testing of oil for water and contaminants when cooling water temperature remains < 60°F for an extended period of time. Relief valves are provided to protect the piping from overpressure. Differential pressure indicators are provided on each pump to indicate that CCW flow exists to the bearing oil and gear oil coolers. The swing charging pump (B) can be supplied with cooling water from either CCW train.

Firewater can be used as an emergency source of cooling to the charging pumps in the event CCW is not available. This is accomplished in accordance with Attachment 3 to AOP-9.0, Loss of Component Cooling Water.

RHR Heat Exchangers and Pumps

Cooling water is supplied to the residual heat removal (RHR) heat exchangers via MOV-3185A and B, which are controlled from the MCB. Each heat exchanger requires 5600 gpm of cooling water. High flow on the discharge of the heat exchangers annunciates on the MCB (6000 gpm), indicating a gross failure of heat exchanger tubes.

The supply valve to the RHR heat exchanger in the off-service CCW train is kept open to minimize the pressure surge in the system when initially starting the off-service CCW pump. The

pressure and temperature for the pumps is 150 psig and 200°F. The pumps are driven by a 400-hp induction motor. The CCW system must provide a minimum of 6,555 gpm for the on-service train to the essential and nonessential users previously listed. Each pump is provided with a discharge check valve to prevent reverse flow through an idle pump in the on-service train.

Pump A is powered from 4160 bus G; pump B is powered from 4160 bus F or G; and pump C is powered from 4160 bus F. To ensure that both power supplies are never simultaneously connected to the swing pump, a key-interlock is used. The swing pump is mechanically aligned to the same train that it is connected to electrically. The pumps are normally controlled from the MCB or may be controlled from the hot shutdown panel (HSP).

Each pump takes a suction on a common suction line; the suction line has manual isolation valves which are used for train separation. In addition, each pump discharges into a common discharge line; the discharge line also has manual isolation valves which are used for train separation. The discharge line provides the inlet for the CCW heat exchangers. The miniflow line with manual isolation provides a minimum flow of 1,000 gpm back to the pump suction header.

When a CCW pump is started, the pump room coolers automatically start to maintain a room temperature below 104°F, which is design temperature to prevent degradation of motor windings. Analysis states that the maximum temperature in the CCW pump room without a room cooler during a DBA is 145°F with one train of service water. This is less than the maximum allowable temperature of 149°F. Therefore, the pump room coolers are not needed for the Design Basis Accident (DBA).

CCW Heat Exchangers

Three seismic class I heat exchangers receive their flow from the common CCW pump discharge line. These heat exchangers are designed to maintain CCW temperature at a maximum of 105° to essential and nonessential users during normal operation and less than 135°F to essential user (ESF loads) during post LOCA recirculation.

The CCW heat exchangers are cooled by service water. CCW flows through the shell side, and service water flows through the tube side. Manually controlling the service water flow through the heat exchangers regulates the outlet temperature of the CCW. The inlet service water design temperature is 95°F, and the outlet temperature is 104.1°F, with a minimum of 10,000 gpm during all operating modes and design basis accidents.

TABLE 7
POWER SUPPLIES

LOAD	SUPPLY	EMERGENCY DIESEL	Start-up Transformer Normal	Start-up Transformer Alternate
Service Water Pump A	4160 Bus K	A Train Diesel	S/U A	S/U B
Service Water Pump B	4160 Bus K	A Train Diesel	S/U A	S/U B
Service Water Pump C	4160 Bus K or Bus L	A Train or B Train	S/U A	S/U B
Service Water Pump D	4160 Bus L	B Train Diesel	S/U B	S/U A
Service Water Pump E	4160 Bus L	B Train Diesel	S/U B	S/U A
Screen Wash Pump A	600V LC K	A Train Diesel	S/U A	S/U B
Screen Wash Pump B	600V LC L	B Train Diesel	S/U B	S/U A
Service Water Screen A	208V MCC K	A Train Diesel	S/U A	S/U B
Service Water Screen B	208V MCC L	B Train Diesel	S/U B	S/U A
Service Water Air Compressors A & B	600V MCC K	A Train Diesel	S/U A	S/U B
SW Pump Lube Water Supply Booster Pump P002A**	600V AC MCC 1K	A Train Diesel	S/U A	S/U B
SW Pump Lube Water Supply Booster Pump P002B**	600V AC MCC 1L	B Train Diesel	S/U B	S/U A
SW Strainer F501A Motor	600V AC MCC 1L	B Train Diesel	S/U B	S/U A
SW Strainer F501B Motor	600V AC MCC 1K	A Train	S/U A	S/U B
SW Pump Lube and Cooling Water Strainer F503A	208V AC MCC 1K	A Train Diesel	S/U A	S/U B
SW Pump Lube and Cooling Water Strainer F503B	208V AC MCC 1L	B Train Diesel	S/U B	S/U A
MOV-3084A (QV001A)	600V AC MCC 1V	B Train Diesel	S/U B	S/U A

57. 078G2.1.30 001/2/1/IAS/MEM 3.9/3.4/BANK/FA011005/RO/

The Unit 1 crew is recovering from a loss of instrument air. Which one of the following conditions is the minimum pressure that must be restored and the local action that must occur for V-904, Instrument Air to Service Building to be restored?

A. The air header pressure must be above 70 psig and the reset push button on the BOP must be depressed.

B. The air header pressure must be above 65 psig and the reset push button on the BOP must be depressed.

C. The air header pressure must be above 55 psig and the reset push button on the local air reset panel must be depressed.

D. The air header pressure must be above 45 psig and the reset push button on the local air reset panel must be depressed.

A. Incorrect - The air pressure of 70 psig would be correct if the stem did not say minimum pressure, but the panel is not correct.

B. Incorrect- The air pressure of 65 psig would be correct if the stem did not say minimum pressure, but the panel is not correct.

C. Correct - **The air header pressure must be above 55 psig and the reset push button on the local air reset panel must be depressed.**
OPS-52108A
Instrument Air to Service Building (V-904)
Refer to Figures 3 & 8. If the pressure at the outlet of the Unit 1 instrument air dryers, as sensed by PS-506, drops to 55 psig, instrument air to the service building is isolated.
To restore instrument air to the service building, air pressure must be above 55 psig and the RESET push button on the Unit 1 local air reset panel must be depressed.

D. Incorrect- This is incorrect in that the air pressure of 45 to 55 psig would not allow the valve to reset

078G2.1.30 Instrument Air -Ability to locate and operate components, including local controls

List the automatic actions associated with the Compressed Air System components and equipment during normal and abnormal operations including (OPS40204D07):
• Normal control methods
• Automatic actuation including setpoints for selective isolation on decreasing header pressure

Describe the local actions needed to support plant operation during normal, abnormal and emergency conditions associated with the Compressed Air System (OPS40204D09).

COMP AIR-40204D09 #1

4.1.3 Reset and open service air header automatic isolation valve N1P18V901. (Reset button located on reset box east of 1B SGFP oil conditioner.)

4.1.4 Verify service air header press between 90-100 psig.

4.1.5 Monitor air dryer during the regeneration cycle to ensure purge air pressure of 50.1 - 54.9 psig. IF required, THEN adjust purge air pressure using associated flow control valve.

4.1.6 Monitor the air dryer during the operation cycle, verify proper operation by BLUE color on moisture indicator.

4.2 Removing the Service Air System from service.

4.2.1 Close service air header isolation valve N1P19V521.

4.3 Returning Service Air Dryer to Service.

4.3.1 Open service air dryer outlet isolation valve N1P18V547U.

4.3.2 Open service air dryer inlet isolation valve N1P18V547Y.

4.3.3 Close service air dryer bypass valve N1P18V548.

4.4 Removing Service Air Dryer from Service.

4.4.1 Open service air dryer bypass valve N1P18V548.

4.4.2 Close service air dryer inlet isolation valve N1P18V547Y.

4.4.3 Close service air dryer outlet isolation valve N1P18V547U.

4.5 Aligning Service Air to Containment

Note:	**Consideration should be given to initiating an Admin. Tracking LCO for the duration air is aligned to containment.**

4.5.1 Unlock and open N1P18V062, SA TO PENE RM HDR ISO (in Main Steam Valve Room). (Key Z-218)

High Pressure Outlet Air Temp (Element 2) [TT-632]	212°F min temp OR 2°F below shutdown temp
Oil Temp [TT-625]	104°F min temp OR 2°F below shutdown temp
Oil Pressure [TT-631]	< 18 psig OR > 29 psig

AUTOMATIC SHUTDOWN FUNCTIONS	
Drive Motor Overload	
Vent Fan Motor Overload	
Emergency Stop Button on Air Compressor Local Panel	
Low Pressure Outlet Air Temp High (Element 1) [TT-629]	428°F
High Pressure Inlet Air Temp High (Element 2) [TT-576]	158°F
High Pressure Outlet Air Temp High (Element 2) [TT-632]	428°F
Oil Temp High [TT-625]	158°F
Oil Pressure Low [PT-631]	< 17.4 psig
SW Discharge Temp High [TS-501]	122°F

Service Air Header Isolation Valve (V-901)

Refer to Figures 3 & 8. Service air header isolation valve (V-901) will close if air header pressure, as sensed by PS-503, drops to 80 psig. Once closed, the local RESET push button on the air reset panel must be depressed to restore service air after header pressure is back above 80 psig.

Instrument Air Dryer Bypass Valve (V-902)

Refer to Figures 3 & 8. If the pressure at the outlet of the instrument air dryers drops below 70 psig as sensed by PS-504, the bypass valve (V-902) will open. The bypass valve will remain open until the RESET push button on the local air reset panel is depressed.

Instrument Air to Service Building (V-904)

Refer to Figures 3 & 8. If the pressure at the outlet of the Unit 1 instrument air dryers, as sensed by PS-506, drops to 55 psig, instrument air to the service building is isolated. To restore

instrument air to the service building, air pressure must be above 55 psig and the RESET push button on the Unit 1 local air reset panel must be depressed.

Instrument Air to Turbine Building (V-903)

Refer to Figures 3 & 8. If the pressure at the outlet of the air dryer unit drops to 45 psig as sensed by PS-505A, B or C using a 2/3 logic, instrument air to the turbine building (V903) will close. To restore instrument air to the turbine building, the air pressure must be above 45 psig and the RESET push button on the local air reset panel must be depressed.

Pressurizer Power-Operated Relief Valve Air Supply

Refer to Figures 3, 9, & 10. There are three ways to get an operating medium (air or nitrogen) to the power-operated relief valves (PORVs).

One source of air for the PORVs comes through penetration room isolation valves (HV-3885 and HV-3825) and the containment isolation valve (HV-3611). This source of air is subject to being isolated by penetration room pressure sensors, which will close HV-3885 and HV-3825. A second source of air for the PORVs comes from the instrument air to the auxiliary building through HV-2228 (refer to Figure 9). Nitrogen bottles provide the final means of operating the PORVs.

The system requirement is to cycle a PORV approximately 100 times (reference Westinghouse letter APW-A-5299, dated 8/5/80). The capacity of the compressed gas is based on one cylinder providing air for 100 PORV cycles with the second cylinder providing additional capacity for leakage and to permit cylinder change out.

To achieve 100 cycles requires approximately 32 cubic feet at 100 psi (» 217 scf). Using 100 psi as the lower pressure limit, approximately 11 scf is not available for use based on a 1.6 cubic foot cylinder containing a minimum of 240 scf. Therefore, to supply 217 scf, one cylinder should contain a minimum of 2100 psig. To supply 217 scf from two cylinders, 22 scf is not available based on a total cylinder volume of 3.2 cubic feet; therefore, each cylinder should contain a minimum of 1100 psig. This is the basis of the minimum pressure specification in the nitrogen bottles.

3.18 If a "?" or a "!" is flashing above an air compressor's number on the sequencer panel, there has been a communication error between the sequencer and that air compressor. Verify that the air compressor's key is in the SEQ position. If the "?" or the "!" is still flashing, refer to vendor manual U-418372 (start in Section 6.3, Sequence Display).

3.19 Failure of the sequencer panel pressure transducer could unload all air compressors selected (integrated) and result in complete loss of air pressure. To prevent loss of air from a single failure, at least one air compressor should be aligned with the air compressor panel key switch in LOCAL OR in MCB with the AUTOMATIC OPERATION LED lit (green).

4.0 Instructions

4.1 Compressed Air System Startup after System Shutdown and Normal Operation

4.1.1 IF the air compressor is to be started and stopped and NOT be put in service per section 4.2 of this procedure, THEN perform the air compressor pre-operational check on air compressors 1A, 1B and 1C per Appendix 4.

4.1.2 Before placing the first air compressor in service per section 4.2 of this procedure, verify the sequencer is in service AND maximum pressure is set AND minimum pressure is set per Appendix 2.

4.1.3 Place air compressors in service per section 4.2.

NOTE: Steps 4.1.4 through 4.1.13 are only required if the compressed air system has been completely shut down and the system is being placed in service with the initial air compressor (i.e., if the compressed air system is in service, these steps should already have been completed). However, IF desired, THEN these steps can be verified when any air compressor is placed in service.

4.1.4 Reset and close air dryer auto bypass valve N1P19V902.

4.1.5 Reset and open non-essential instrument air auto iso valve N1P19V904.

CAUTION: In the following step open air valve slowly to allow pressure to equalize gradually.

4.1.6 Crack open essential inst air hdr iso bypass valve N1P19V942C and allow differential pressure to equalize.

4.1.7 Reset and open essential inst air hdr auto iso valve N1P19V903.

4.1.8 Close essential inst air hdr bypass valve N1P19V942C.

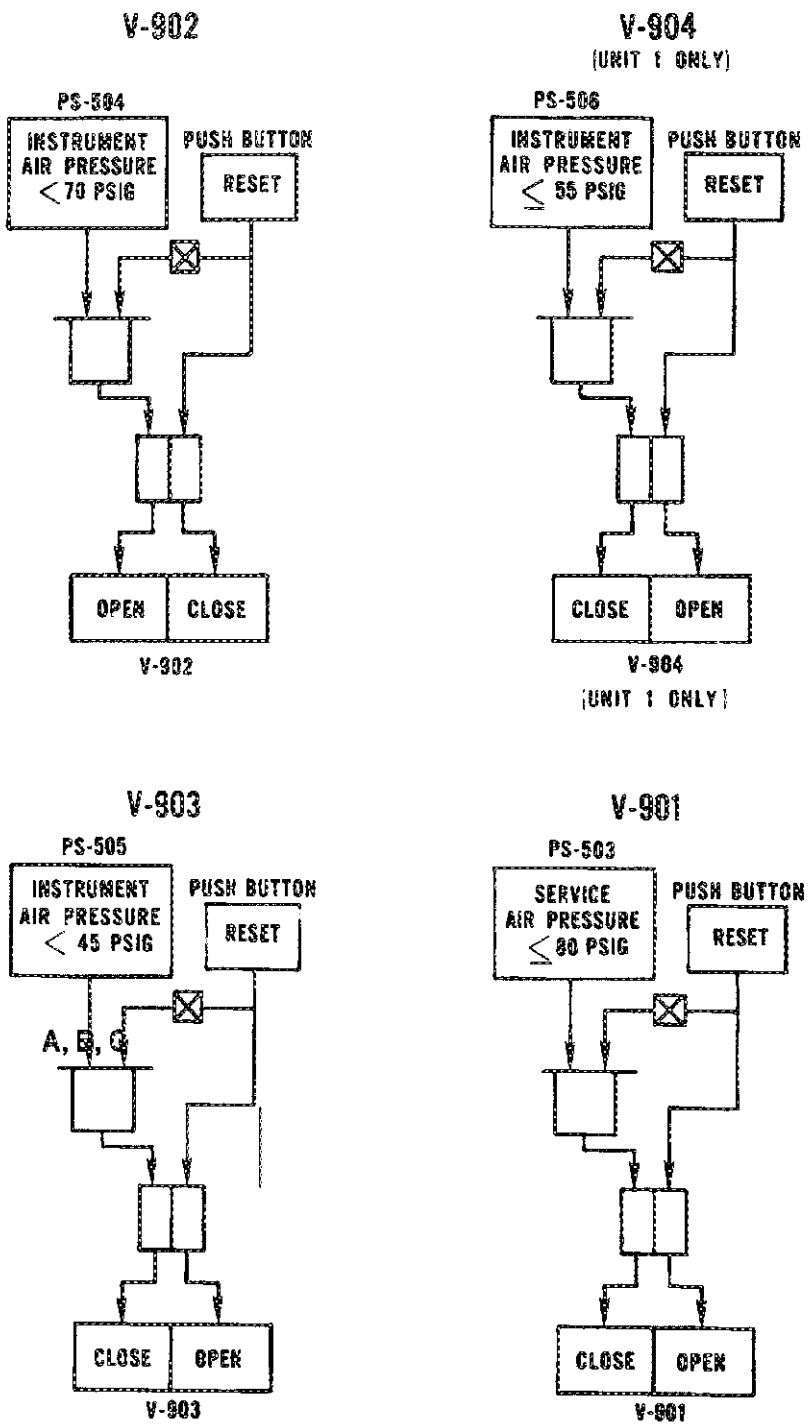

2/3

Service Air Header Isolation Valve V901
Instrument Air Dryer Bypass Valve V902
Instrument Air to Turbine Building V903
Instrument Air to Service Building V904
Figure 8

Instrument Air to Penetration Room (HV-3885 and HV-3825)

Refer to Figures 3 & 10. These isolation valves are in series and will close if penetration room pressure exceeds 3.0 in H_2O. Each valve is controlled on the balance of plant (BOP) panel by a three-position handswitch (STOP/Neutral/START, spring return to Neutral).

Instrument Air to Containment (HV-3611 and HV-2228)

Refer to Figures 3 & 10. These valves are controlled by three-position handswitches (CLOSE/AUTO/OPEN, spring return to AUTO). HV-3611 is controlled from the BOP panel, and HV-2228 is controlled from the penetration room isolation panel. Both of these valves will close upon receiving a P-signal.

Instrument Air to Main Steam Atmospheric Relief Valves

Refer to Figure 13. Instrument air provides the normal supply to the main steam atmospheric relief valves with two emergency air compressors as a back-up supply. The details of operation are discussed in the Main and Reheat Steam system lesson plan.

Instrument Air to TDAFWP Steam Admission Valves (Figure 12)

Refer to Figure 12. Instrument air provides the normal supply to the TDAFWP steam admission valves with two emergency air compressors as a back-up supply. The details of operation are discussed in the Auxiliary Feedwater lesson plan.

Containment Breathing Air

Refer to Figures 5 & 14. With the two-position handswitch for containment breathing air supply (SA HDR/EMERG CYL) on the BOP panel selected to the SA HDR position, either a low service air pressure of 75 psig, a high carbon monoxide level of 10 ppm or power being lost to the CO monitor will close the normal supply (HV-2935B) and open the supply from the emergency air bottles (HV-2935A). Additionally, the general service connections inside Unit 1 containment are isolated (HV-2935C).

58. 078K3.01 001/2/1/IAS/MEM 3.1*/3.4*/BANK/FA011005/RO/

While at 2% power, an air line break in the auxiliary building occurred. All available air compressors are running and air pressure continues to fall. The following valves have gone to their fail position: LCV-459, LTDN LINE ISO, FCV-122, CHG FLOW CONT and both PRZR spray valves, PCV-444C and D. Pressurizer level and pressure are both rising.

IAW AOP-6.0, Loss of Instrument Air, which one of the following would allow the operator to control PRZR pressure?

A. Align aux spray.

B. Align nitrogen to the PORVs.

C. Align Alternate Instrument air supply to the PORVs.

D. Align the emergency air compressors to the spray valves.

AOP-6.0
11 Align nitrogen supply to PRZR PORVs using FNP-2-SOP-62.1, BACK-UP AIR OR NITROGEN SUPPLY TO THE PRESSURIZER POWER OPERATED RELIEF VALVES.

A. Incorrect - This is not allowed by procedure. Letdown is required to heat chg water prior to using aux spray.

B. Correct- **Align nitrogen to the PORVs.**
This is the proper way to control RCS pressure IAW AOP-6

C. Incorrect- Alternate Instrument air will not be available in this situation as air pressure continues to drop. If IA is not available, then alternate would not be available at some point. The alternate IA comes directly off the header and is not isolated by automatic valves. If IA would stabilize at some point, and if pressure were high enough then this would be an alternative. Since pressure continues to drop and the leak is not isolated, the best method is to use Nitrogen and procedurally this is the only method IAW with step 11 of AOP-6.0.

D. Incorrect- EACs do not go to the Spray valves.

078K3.01 Instrument Air - Knowledge of the effect that a loss or malfunction of the IAS will have on the following: Containment air system

Explain the purpose and operation including the design features and functions, capacities, and protective interlocks of the following major components associated with the Compressed Air System (OPS40204D02):

- Atlas Copco air compressors
- Atlas Copco sequencer controllers
- Air dryer units
- Emergency air compressors and air supplies to PORV's

Describe the local actions needed to support plant operation during normal, abnormal and emergency conditions associated with the Compressed Air System (OPS40204D09).

AOP-6.0-52520F06 #2

On both Units, Containment Breathing Air is no longer used; air is supplied to personnel by portable breathing air manifolds connected to standard Service Air connections. The Breathing Air penetration isolations are left closed (Unit 2) and the Air Purifiers are not placed in operation (both Units).

PROCEDURES

SOP-31.0, Compressed Air System

This compressed air system procedure provides the initial conditions, precautions, limitations, and instructions for the operation of the compressed air system.

SOP-31.1, Service Air System

This SOP-31.1 procedure provides the initial conditions, precautions, limitations, and instructions for the operation of the service air system.

SOP-62.0. Emergency Air System

This procedure provides the initial conditions, precautions, limitations, and instructions for the operation of the emergency air system.

SOP-62.1, Back-up Air or Nitrogen Supply to the Pressurizer Power-Operated Relief Valves

This procedure provides the initial conditions, precautions, limitations, and instructions for operation of the back-up air or nitrogen supply to the pressurizer power operated relief valves.

AOP-6.0, Loss of Instrument Air

This procedure provides symptoms, automatic actions, immediate operator actions, and subsequent operator actions for the loss of instrument air.

ARP, KD1, KD2, KD3, BK1, BK2

These procedures provide guidance for low air pressure to the penetration room low instrument air pressure and low service air pressure.

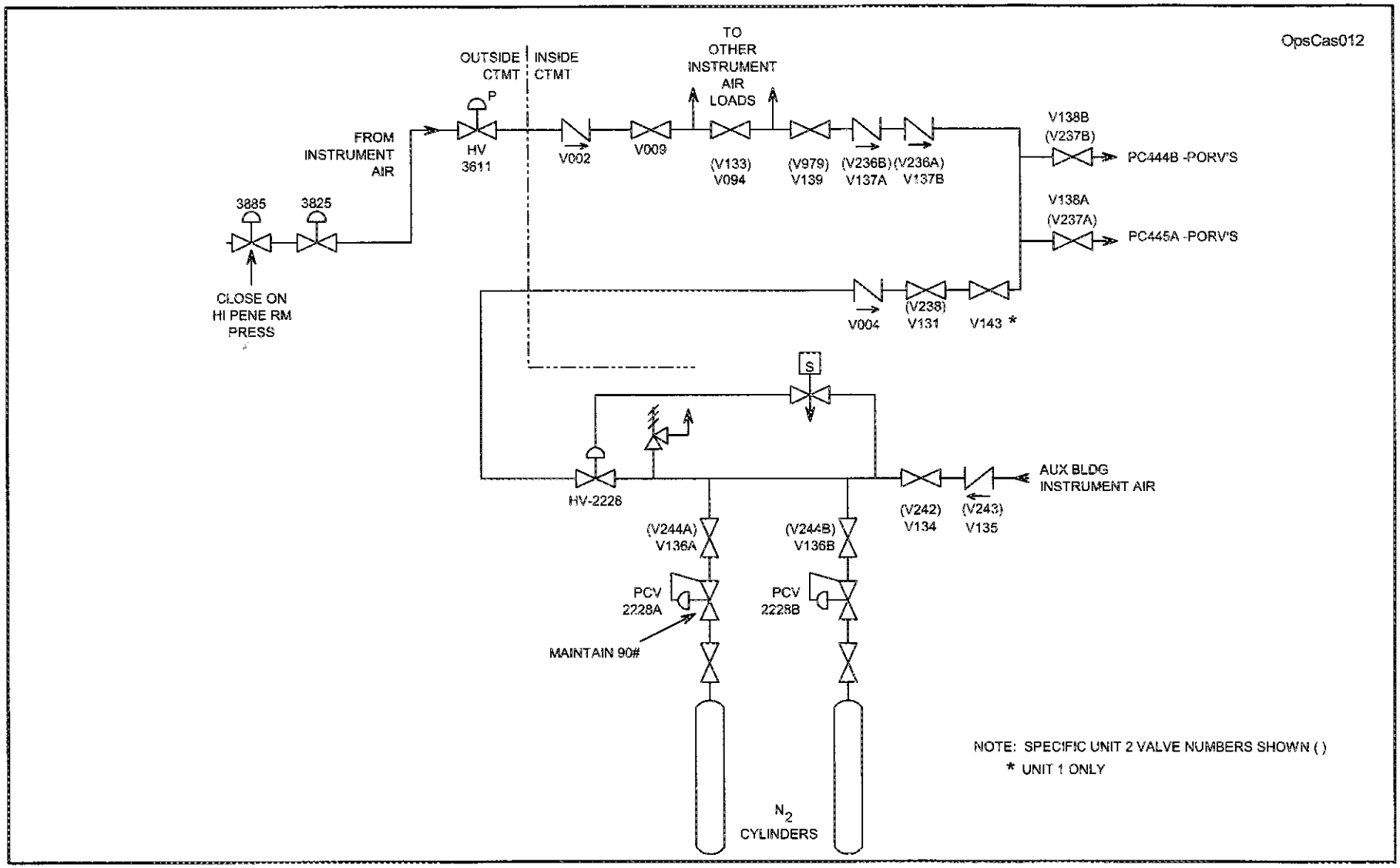

Pressurizer PORV Air Supply

Figure 9

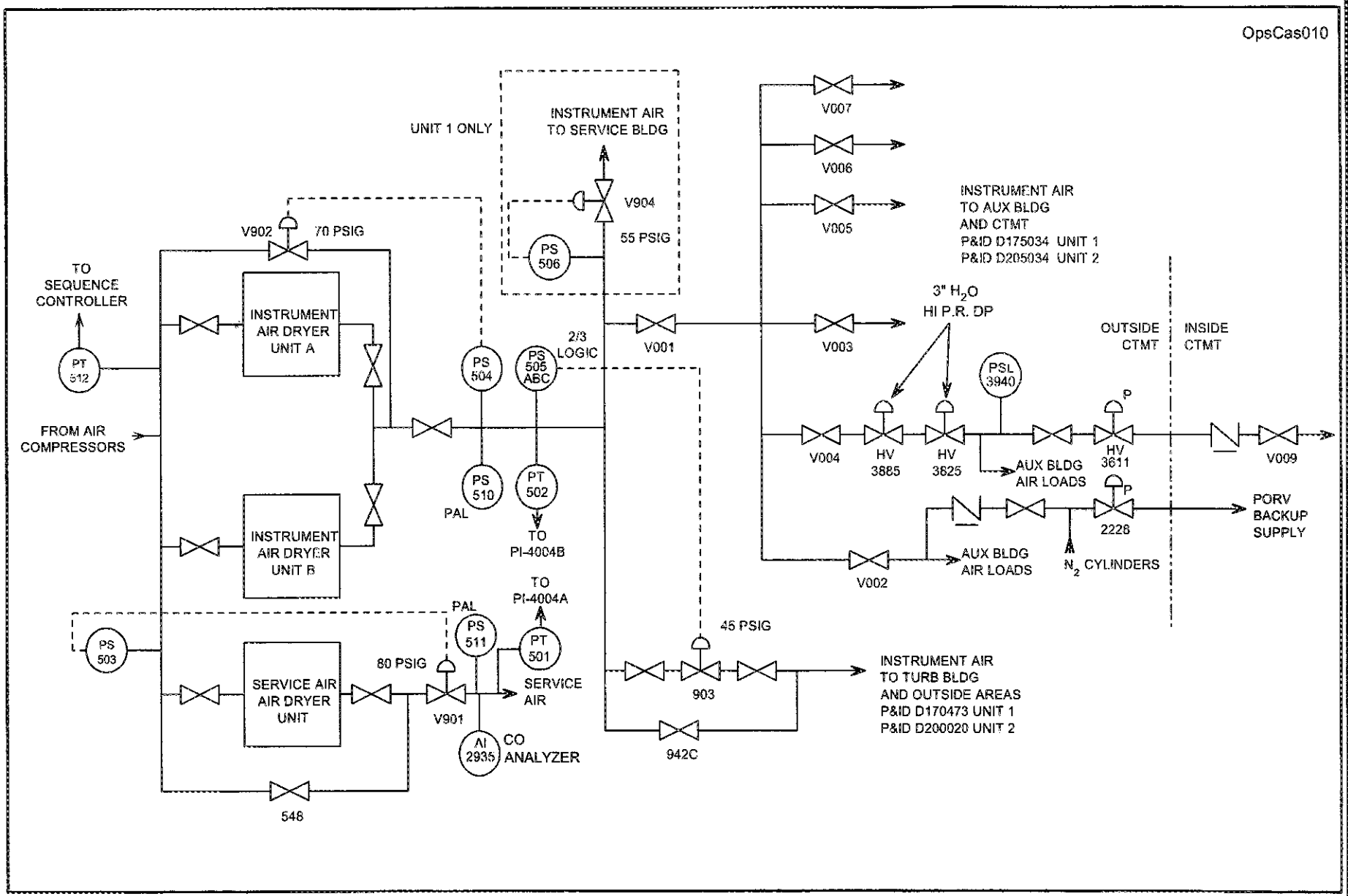

Air Distribution Header

Figure 3

instrument air to the service building, air pressure must be above 55 psig and the RESET push button on the Unit 1 local air reset panel must be depressed.

Instrument Air to Turbine Building (V-903)

Refer to Figures 3 & 8. If the pressure at the outlet of the air dryer unit drops to 45 psig as sensed by PS-505A, B or C using a 2/3 logic, instrument air to the turbine building (V903) will close. To restore instrument air to the turbine building, the air pressure must be above 45 psig and the RESET push button on the local air reset panel must be depressed.

Pressurizer Power-Operated Relief Valve Air Supply

Refer to Figures 3, 9, & 10. There are three ways to get an operating medium (air or nitrogen) to the power-operated relief valves (PORVs).

One source of air for the PORVs comes through penetration room isolation valves (HV-3885 and HV-3825) and the containment isolation valve (HV-3611). This source of air is subject to being isolated by penetration room pressure sensors, which will close HV-3885 and HV-3825. A second source of air for the PORVs comes from the instrument air to the auxiliary building through HV-2228 (refer to Figure 9). Nitrogen bottles provide the final means of operating the PORVs.

The system requirement is to cycle a PORV approximately 100 times (reference Westinghouse letter APW-A-5299, dated 8/5/80). The capacity of the compressed gas is based on one cylinder providing air for 100 PORV cycles with the second cylinder providing additional capacity for leakage and to permit cylinder change out.

To achieve 100 cycles requires approximately 32 cubic feet at 100 psi (» 217 scf). Using 100 psi as the lower pressure limit, approximately 11 scf is not available for use based on a 1.6 cubic foot cylinder containing a minimum of 240 scf. Therefore, to supply 217 scf, one cylinder should contain a minimum of 2100 psig. To supply 217 scf from two cylinders, 22 scf is not available based on a total cylinder volume of 3.2 cubic feet; therefore, each cylinder should contain a minimum of 1100 psig. This is the basis of the minimum pressure specification in the nitrogen bottles.

To complete the cycle, solenoid S deenergizes, closing valve C. The left air dryer is pressurized to system pressure by energizing solenoid U, which opens valve K. After 19 seconds, solenoid U deenergizes, closing valve K. The left air dryer is ready to be placed back in service so that the right air dryer can go through the regeneration cycle. Each air dryer unit is regenerated every ten minutes.

Instrument Air System

The instrument air system shown in Figure 3 provides the motive force for operating pneumatic equipment throughout the plant. The instrument air system branches into headers that supply separate areas. The major headers supply the following areas:

1. The auxiliary building and containment
2. The turbine building and outside areas
3. The service building (supplied only from the Unit I header)

If the instrument air system starts to lose pressure, it attempts to maintain a supply of air to the auxiliary building and containment by isolating selective areas from the system. At 75 psig decreasing at the air dryer outlet, purging air for air dryer regeneration is isolated by closing the air dryer unit purge valves C and D (refer to Figure 4). If the instrument air header pressure decreases to 70 psig, the air drying unit bypass valve, V-902, opens (refer to Figure 3). If pressure drops to 55 psig (Unit I only), V-904 closes, isolating instrument air to the service building. At 45 psig, instrument air to the turbine building and out-side areas is isolated by closing V-903 in an attempt to provide the auxiliary building and containment with instrument air.

In order for the pressurizer power-operated relief valves to remain operable on a loss-of-instrument air, they have their own emergency operating gas supply (from nitrogen bottles). The main steam atmospheric relief valves have their own emergency air compressors, to maintain operability on a loss-of-instrument air.

Step	Action/Expected Response	Response NOT Obtained
___10	**Verify SW isolated to standby CCW heat exchanger.**	

Standby CCW HX	2C	2B	2A
SW TO 2C(2B,2C) CCW HX Q2P16MOV	[]3130C closed	[]3130B closed	[]3130A closed

___11	**Align nitrogen supply to PRZR PORVs using FNP-2-SOP-62.1. BACK-UP AIR OR NITROGEN SUPPLY TO THE PRESSURIZER POWER OPERATED RELIEF VALVES.**	
___12	**Stabilize RCS TAVG at existing value.**	
	12.1 Control SG atmospheric reliefs using FNP-2-SOP-62.0, EMERGENCY AIR SYSTEM. 2A(2B,2C) MS ATMOS REL VLV [] PC 3371A adjusted [] PC 3371B adjusted [] PC 3371C adjusted	12.1 Locally control SG atmospheric reliefs with handwheels. (127 ft, AUX BLDG main steam valve room) 2A(2B,2C) MS ATMOS REL VLV [] Q2N11PV3371A [] Q2N11PV3371B [] Q2N11PV3371C
___13	**Return to step 2.**	
___14	**Align instrument air to containment. (BOP)** IA TO PENE RM [] N2P19HV3825 open [] N2P19HV3885 open IA TO CTMT [] N2P19HV3611 open	
___15	**<u>IF</u> charging bypass flow control in service, <u>THEN</u> align normal charging flow control using FNP-2-SOP-2.1, CHEMCIAL AND VOLUME CONTROL SYSTEM PLANT STARTUP AND OPERATION.**	

___Page Completed

FARLEY NUCLEAR PLANT
UNIT 1
SYSTEM OPERATING PROCEDURE SOP-62.1

BACK-UP AIR OR NITROGEN SUPPLY TO THE PRESSURIZER POWER OPERATED RELIEF VALVES

1.0 Purpose

This procedure provides the Initial Conditions, Precautions and Limitations, and Instructions for Operation of the Back-up Air or Nitrogen Supply to the Pressurizer Power Operated Relief Valves. Instructions are included in the following sections:

4.1 Operation of the PRZR PORVs Upon Loss of Instrument Air Using Alternate Instrument Air Supply.

4.2 Operation of the PRZR PORVs Upon Loss of Instrument Air Using Nitrogen Supply.

4.3 Shifting from One Nitrogen Bottle to the Other Nitrogen Bottle.

4.4 Returning System to Normal Operation.

4.5 Checking PRZR PORV Nitrogen Bottle Pressure.

2.0 Initial Conditions

2.1 The back-up air or nitrogen supply to the pressurizer power operated relief valves system valves are aligned per system check list FNP-1-SOP-62.1A.

3.0 Precautions and Limitations

3.1 Any time the PRZR PORVs are operated monitor PRT parameters.

3.2 IF at any time the PRZR PORVs don't reseat properly, THEN close the appropriate PRZR PORV ISO.

4.0 Instructions

4.1 Operation of the PRZR PORVs Upon Loss of Instrument Air Using Alternate Instrument Air Supply.

4.1.1 Open back-up instrument air to PRZR PORVs valve N1P19V134.

4.1.2 Open PORV BKUP AIR SUPPLY Q1P19HV2228. (PRIP)

4.1.3 Verify proper operation of PRZR PORVs.

4.2 Operation of the PRZR PORVs Upon Loss of Normal Instrument Air Using Nitrogen Supply.

NOTE:

- **Place in service only one nitrogen bottle at a time. WHEN the pressure decreases to approximately 150 psig to 200 psig, THEN place the other nitrogen bottle on service per step 4.3, and change out the used nitrogen bottle.**
- **PORV BKUP air supply Q1P19HV2228 fails closed on a loss of `B' Train DC. IF entry into this procedure was due to a loss of `B' Train DC Bus, THEN normal instrument air can be restored by jacking open IA TO PENE RM N1P19HV3885 (100' non-rad plant heating equipment room), and then opening IA TO PENE RM N1P19HV3825 and IA TO CTMT Q1P19HV3611 from the BOP.**
- **IF entry into this procedure was due to a loss of `A' Train DC Bus, THEN the following guidance will allow operation of the PORVs.**

4.2.1 Open the nitrogen bottle outlet valve on the bottle to be placed in service.

4.2.2 Open nitrogen isolation to back-up instrument air valve N1P19V136A(B) and adjust N1P19PCV2228A(B) to indicate approximately 100 psig on PI 2228.

4.2.3 Open PORV BKUP Air Supply Q1P19HV2228. (PRIP)

4.2.4 Verify proper operation of PRZR PORVs.

4.3 Shifting from One Nitrogen Bottle to the Other Nitrogen Bottle.

4.3.1 Open the nitrogen bottle outlet valve on the fully charged bottle.

4.3.2 Open nitrogen isolation to back-up instrument air valve N1P19V136A(B) on the fully charged nitrogen bottle.

4.3.3 Close nitrogen isolation to back-up instrument air valve N1P19V136A(B) on the used nitrogen bottle.

4.3.4 Close the nitrogen bottle outlet valve on the used bottle.

4.3.5 Replace the used nitrogen bottle with a fully charged nitrogen bottle.

4.3.6 Repeat steps 4.3.1 thru 4.3.5 as necessary to insure adequate nitrogen to PRZR PORVs.

Step	Action/Expected Response	Response NOT Obtained

___10 **Verify SW isolated to standby CCW heat exchanger.**

Standby CCW HX	2C	2B	2A
SW TO 2C(2B,2C) CCW HX Q2P16MOV	[]3130C closed	[]3130B closed	[]3130A closed

___11 **Align nitrogen supply to PRZR PORVs using FNP-2-SOP-62.1, BACK-UP AIR OR NITROGEN SUPPLY TO THE PRESSURIZER POWER OPERATED RELIEF VALVES.**

___12 **Stabilize RCS TAVG at existing value.**

12.1 Control SG atmospheric reliefs using FNP-2-SOP-62.0, EMERGENCY AIR SYSTEM.

2A(2B,2C) MS ATMOS REL VLV
[] PC 3371A adjusted
[] PC 3371B adjusted
[] PC 3371C adjusted

12.1 Locally control SG atmospheric reliefs with handwheels. (127 ft, AUX BLDG main steam valve room)

2A(2B,2C) MS ATMOS REL VLV
[] Q2N11PV3371A
[] Q2N11PV3371B
[] Q2N11PV3371C

___13 **Return to step 2.**

___14 **Align instrument air to containment. (BOP)**

IA TO PENE RM
[] N2P19HV3825 open
[] N2P19HV3885 open

IA TO CTMT
[] N2P19HV3611 open

___15 **<u>IF</u> charging bypass flow control in service, <u>THEN</u> align normal charging flow control using FNP-2-SOP-2.1, CHEMCIAL AND VOLUME CONTROL SYSTEM PLANT STARTUP AND OPERATION.**

___Page Completed

59. 103A2.03 001/2/1/CTMT ISOL/MEM 3.5*/3.8*/NEW/FA011005/RO/

Unit 2 has had a Large break LOCA. Phase A and B signals were actuated by automatic actuation signals. Which one of the following conditions indicates a system misalignment and the actions to be taken?

A. 1B CS PUMP TO SPRAY HDR ISO (MOV-8820B) open, close MOV-8820B.

B. HHSI TO RCS CL ISO (MOV-8803A & B) open, close MOV-8803A & B.

C. 1B PRF SUCTION DMPR (MOV-3362B) closed, open MOV-3362B.

D. VCT OUTLET ISO (LCV-115C & E) closed, open LCV-115C & E.

OPS-52102B

A. Incorrect. 8820A and B are required to be open on a Phase B signal to allow CS spray flow to the ctmt.

B. Incorrect. The HHSI valves are required to be open during the injection phase.

C. Correct. **1B PRF SUCTION DMPR (MOV-3362B) closed, open MOV-3362B.** IAW EEP-0, 3362B correct position after a Phase B signal would be open, and the operator would be required to open the valve.

D. Incorrect. The VCT outlet valves will close as soon as their associated train RWST suction valve is open during a Safety Injection. To open them would be incorrect.

103A2.03 Containment - Ability to (a) predict the impacts of the following malfunctions or operations on the containment system; and (b) based on those predictions, use procedures to correct, control, or mitigate the consequences of those malfunctions or operations: Phase A and B isolation

List the automatic actions associated with the Emergency Core Cooling System components and equipment during normal and abnormal operations including (OPS40302C07):
- Normal control methods
- Automatic actuation including setpoint (example SI, Phase A, Phase B, MSLIAS, LOSP, SG level)
- Protective isolations such as high flow, low pressure, low level including setpoint
- Protective interlocks

Step	Action/Expected Response	Response NOT Obtained
21.4	Verify BKR DG02 (1G 4160 V bus tie to 1L 4160 V bus) - CLOSED.	21.4 IF diesel generator cooling NOT supplied, THEN secure 1B diesel generator using ATTACHMENT 3, SECURING A DIESEL GENERATOR WITH A SAFETY INJECTION SIGNAL PRESENT.
21.5	Verify two trains of battery chargers - ENERGIZED. [] A Train (1A or 1C) amps > 0 [] B Train (1B or 1C) amps > 0	21.5 Verify battery charger supply breakers closed. [] A Train (BKR ED04-1) [] B Train (BKR EE05-1)

NOTE: Verification of equipment powered from a deenergized bus should be performed after power is restored.

21.6 Verify two trains of ESF equipment aligned.

21.6.1 Check all MLB-1 lights - LIT.

21.6.1 Verify safety injection alignment using ATTACHMENT 4,SAFETY INJECTION ALIGNMENT.

21.6.2 Verify charging pump suction and discharge valves - OPEN.

CHG PUMP
DISCH HDR ISO
[] Q1E21MOV8132A
[] Q1E21MOV8132B
[] Q1E21MOV8133A
[] Q1E21MOV8133B

CHG PUMP
SUCTION HDR-ISO
[] Q1E21MOV8130A
[] Q1E21MOV8130B
[] Q1E21MOV8131A
[] Q1E21MOV8131B

Step 21 continued on next page.

___Page Completed

Step | Action/Expected Response | Response NOT Obtained

ATTACHMENT 4

	1	2	3	4	5	6	7	8	9	10
1	SAFETY INJECTION	CHG PMP TRN A ON	RHR PMP 1A ON	SW PUMP 1A ON	SW PUMP 1B ON	CCW PMP TRN A ON	CONT CLR TRN A SLOW ON		AFW PMP 1A ON	CHG RM CLR TRN A ON
2	LCV115C CLOSED	LCV115E OPEN			3131 CLOSED	2229 CLOSED	3015A OPEN	3019B OPEN		RHR RM CLR 1A ON
3	8808A OPEN	8803A OPEN	8107 CLOSED	3149 CLOSED	3150 CLOSED	3096A CLOSED	3024A OPEN	3024B OPEN		CCW RM CLR 1A ON
4	8808C OPEN					3096B CLOSED	3441C OPEN	3441D OPEN		AFW RM CLR 1A ON

	11	12	13	14	15	16	17	18	19	20
1	SAFETY INJECTION	CHG PMP TRN B ON	RHR PMP 1B ON	SW PUMP 1D ON	SW PUMP 1E ON	CCW PMP TRN B ON	CONT CLR TRN B SLOW ON		AFW PMP 1B ON	CHG RM CLR TRN B ON
2	LCV115B CLOSED	LCV115D OPEN			3134 CLOSED		3015C OPEN	3019D OPEN	3328 CLOSED	RHR RM CLR 1B ON
3	8808B OPEN	8803B OPEN	8106 CLOSED		3135 CLOSED		3024C OPEN	3024D OPEN	3329 CLOSED	CCW RM CLR 1B ON
4							3441A OPEN	3441B OPEN	3330 CLOSED	AFW RM CLR 1B ON

___ 2 Notify control room of safety injection alignment status.

-END-

ATTACHMENT 4

FIGURE 1

LOCATION	COMPONENT NUMBER	NAME
1-1	N/A	SAFETY INJECTION
1-2	Q1E21LCV115C	VCT OUTLET ISO
1-3	Q1E21MOV8808A	1A ACCUM DISCH ISO
1-4	Q1E21MOV8808C	1C ACCUM DISCH ISO
2-1	N/A	CHARGING PUMP TRAIN A
2-2	Q1E21LCV115B	RWST TO CHG PUMP
2-3	Q1E21MOV8803A	HHSI TO RCS CL ISO
2-4	N/A	SPARE
3-1	Q1E11P001A	1A RHR PUMP
3-2	N/A	SPARE
3-3	Q1E21MOV8107	CHG PUMPS TO REGENERATIVE HX
3-4	N/A	SPARE
4-1	Q1P16P001A	1A SW PUMP
4-2	N/A	SPARE
4-3	Q1P16MOV3149	SW TO BLDN HX & BTRS CHLR
4-4	N/A	SPARE
5-1	Q1P16P001B	1B SW PUMP
5-2	Q1P16MOV3131	SW FROM RCP MTR AIR CLRS
5-3	Q1P16MOV3150	SW FROM BLDN HX & BTRS CHLR
5-4	N/A	SPARE
6-1	N/A	CCW PUMP TRAIN A
6-2	Q1P17HV2229	CCW SUPPLY TO SAMPLE COOLER (HS-3229A) (139FT, AUX BLDG rad side)
6-3	Q1P17HV3096A	CCW FROM EVAP PKGS & H2 RECOMB
6-4	Q1P17HV3096B	CCW TO EVAP PKGS & H2 RECOMB

Step	Action/Expected Response	Response NOT Obtained
	NOTE: Step 15 is a continuing action step until directed to monitor critical safety function status trees.	
15	**Check containment pressure - HAS REMAINED LESS THAN 27 psig.** CTMT PRESS [] PR 950	15 Perform the following. 15.1 Verify PHASE B CTMT ISO - ACTUATED. [] MLB-3 1-1 lit [] MLB-3 6-1 lit 15.2 Stop all RCPs. RCP [] 1A [] 1B [] 1C 15.3 Verify PHASE B CTMT ISO alignment. 15.3.1 Check All MLB-3 lights lit. 15.3.2 <u>IF</u> any MLB-3 light <u>NOT</u> lit, <u>THEN</u> verify PHASE B CTMT ISO using ATTACHMENT 1.

Step 15 continued on next page.

___Page Completed

Step	Action/Expected Response	Response NOT Obtained

ATTACHMENT 1

PHASE B CONTAINMENT ISOLATION

NOTE:

- ATTACHMENT 1, FIGURE 1 provides a listing of component names corresponding to each MLB-3 location.
- ATTACHMENT 6 provides a listing of sequenced loads.
- Position of dampers 3361A (B) is dependent on penetration room pressure/inleakage, and may not be open in all cases.

____	1	**Check all the following MLB-3 indicating lights lit.**	1 Verify associated component status.

	1	2	3	4	5	6	7	8	9	10
1	CIMT ISO PHASE B	CS PMP 1A ON	3052 CLOSED	PENE RM EXH FAN 1A ON		CIMT ISO PHASE B	CS PMP 1B ON	3046 CLOSED	PENE RM EXH FAN 1B ON	
2	3611 CLOSED	CS RM CLR 1A ON	3045 CLOSED	PENE RM RECIRC FAN 1A ON		2226 CLOSED	CS RM CLR 1B ON	3184 CLOSED	PENE RM RECIRC FAN 1B ON	
3		8820A OPEN	3182 CLOSED	3361A OPEN			8820B OPEN		3361B OPEN	
4				3362A OPEN					3362B OPEN	

____	2	**Verify proper PRF system operation using FNP-1-SOP-60.0, PENETRATION ROOM FILTRATION SYSTEM.**	
____	3	**Notify control room of phase B containment isolation status.**	

-END-

ATTACHMENT 1

FIGURE 1

LOCATION	COMPONENT NUMBER	NAME
7-1	Q1E13P001B	1B CS PUMP
7-2	Q1E16M002B	1B CS PUMP RM CLR FAN (BOP)
7-3	Q1E13MOV8820B	1B CS PUMP TO SPRAY HDR ISO
7-4	N/A	SPARE
8-1	Q1P17MOV3046	CCW FROM RCP OIL CLRS
8-2	Q1P17HV3184	CCW FROM RCP THRM BARR
8-3	N/A	SPARE
8-4	N/A	SPARE
9-1	Q1E15M001B	1B PRF EXH FAN
9-2	Q1E15M002B	1B PRF RECIRC FAN
9-3	Q1E15MOV3361B	1B PRF RECIRC FAN RECIRC DMPR
9-4	Q1E15MOV3362B	1B PRF SUCTION DMPR
10-1	N/A	SPARE
10-2	N/A	SPARE
10-3	N/A	SPARE
10-4	N/A	SPARE

ATTACHMENT 1

FIGURE 1

LOCATION	COMPONENT NUMBER	NAME
1-1	N/A	CTMT ISO PHASE B
1-2	Q1P19HV3611	IA TO CTMT (BOP)
1-3	N/A	SPARE
1-4	N/A	SPARE
2-1	Q1E13P001A	1A CS PUMP
2-2	Q1E16M002A	1A CS PUMP RM CLR FAN (BOP)
2-3	Q1E13MOV8820A	1A CS PUMP TO SPRAY HDR ISO
2-4	N/A	SPARE
3-1	Q1P17MOV3052	CCW TO RCP CLRS
3-2	Q1P17HV3045	CCW FROM RCP THRM BARR
3-3	Q1P17MOV3182	CCW FROM RCP OIL CLRS
3-4	N/A	SPARE
4-1	Q1E15M001A	1A PRF EXH FAN
4-2	Q1E15M002A	1A PRF RECIRC FAN
4-3	Q1E15MOV3361A	1A PRF RECIRC FAN RECIRC DMPR
4-4	Q1E15MOV3362A	1A PRF SUCTION DMPR
5-1	N/A	SPARE
5-2	N/A	SPARE
5-3	N/A	SPARE
5-4	N/A	SPARE
6-1	N/A	CTMT ISO PHASE B
6-2	Q1P19HV2228	PORV BKUP AIR SUPPLY (PRIP)
6-3	N/A	SPARE
6-4	N/A	SPARE

Step	Action/Expected Response	Response NOT Obtained
		15.4 Check containment spray. 15.4.1 Check containment spray flow in both trains greater than 0 gpm. CS FLOW [] FI 958A [] FI 958B 15.4.2 <u>IF</u> containment spray flow in both trains <u>NOT</u> greater than 0 gpm, <u>THEN</u> verify containment spray pump suction valves open. RWST TO 1A(1B) CS PUMP [] Q1E13MOV8817A [] Q1E13MOV8817B
___16	**Verify PHASE A CTMT ISO.** 16.1 Verify PHASE A CTMT ISO - ACTUATED. [] MLB-2 1-1 lit [] MLB-2 11-1 lit	

NOTE: The turbine building SW isolation valves Q1P16V515, 517, 514 and 516 will take approximately two minutes to fully stroke closed.

	16.2 Check all MLB-2 lights - LIT.	16.2 Verify PHASE A CTMT ISO alignment using ATTACHMENT 2.
___17	**Announce "Unit 1 reactor trip and safety injection".**	

___Page Completed

G2.1.2 001/3/1/ACP-2/MEM 3.0/4.0/BANK/FA011005/RO/

Given the following plant conditions:

- An ALERT has been declared on Unit 2.
- The Plant General Manager has assumed the duties of Emergency Director.
- The TSC, EOF and EOC are being manned.

Which one of the following personnel can grant permission to enter the AT-THE CONTROLS AREA per ACP-2.0, Main Control Room Formality?

A. Shift Support Supervisor- Plant.

B. Shift Technical Advisor.

C. Shift Supervisor.

D. Unit Operator.

ACP-2.0.

A. Incorrect- During these conditions, The SSS-Plant may be in the CR, but the At the Controls Area entrance requirements require permission to enter by the SS only.

B. Incorrect - The STA may be in the CR, but the At the Controls Area entrance requirements require permission to enter by the SS only.

C. Incorrect - **Shift Supervisor.**

The Shift Supervisor can grant permission to enter in an emergency situation only.

D. Inorrect - The UO and OATC can give permission to enter the Area during normal operations, but cannot give permission during an emergency.

• The AT-THE-CONTROLS-AREA (ATC) access is limited to those persons on official business only and loitering in this area should be minimized. The AT-THECONTROLS- AREA is the area encompassed by the glass doors, the Main Control Board (MCB), the Emergency Power Board (EPB), and the Nuclear Instrumentation/Radiation Monitoring System (NI/RMS) racks.

G2.1.2 - Conduct of Operations - Knowledge of operator responsibilities during all modes of operation.

Describe the "at the controls area," and explain the controls associated with accessing this area (OPS40502C07).

PLT COMM-40502C07 #1

FARLEY NUCLEAR PLANT

ADMINISTRATIVE CONTROL PROCEDURE

FNP-0-ACP-2.0

MAIN CONTROL ROOM FORMALITY

PROCEDURE USAGE REQUIREMENTS PER FNP-0-AP-6	SECTIONS
Continuous Use	
Reference Use	
Information Use	ALL

Approved:

D. E. GRISSETTE
Nuclear Plant General Manager

Date Issued 1-7-03

TABLE OF CONTENTS

Procedure Contains	Number of Pages
Body	5
Figure 1	1

FARLEY NUCLEAR PLANT
SHARED
ADMINISTRATIVE CONTROL PROCEDURE ACP-2.0

MAIN CONTROL ROOM FORMALITY

1.0 Purpose

To ensure that Main Control Room activities, both routine and emergency, are conducted with a high degree of professionalism and in such a manner as to enhance plant operations.

2.0 Background (Reference Figure 1)

2.1 AT-THE-CONTROLS-AREA (ATC) – The area encompassed by the glass doors, the Main Control Board (MCB), the Emergency Power Board (EPB), and the Nuclear Instrumentation/Radiation Monitoring System (NI/RMS) racks.

2.2 ATC ENTRANCE – The area immediately inside the glass doors to the AT-THE CONTROLS-AREA.

2.3 AT-THE-CONTROLS-AREA personnel – Operations Shift Superintendent (OSS), Shift Supervisor (SS), Unit Operator (UO), Operator-At-The-Controls (OATC), an extra operator (when needed) and Shift Support Supervisor (SSS) when conducting Shift Technical Advisor responsibilities.

2.4 MCB HORSESHOE AREA – The area directly in front of the Main Control Board. This does not include the upper Main Control Room work platform/desk areas.

2.5 RACK AREA – The area directly in front of the BOP instrumentation racks.

2.6 MAIN CONTROL ROOM – The areas within the key-card security doors.

3.0 Responsibilities

3.1 All individuals at FNP are responsible for complying with the requirements of this procedure when in the MAIN CONTROL ROOM.

3.2 The Assistant General Manager – Operations is responsible for coordinating with FNP groups to ensure that group management supports implementation of the requirements of this procedure.

3.3 Shift Supervisors are responsible for ensuring compliance with this ACP and correcting and coaching personnel who do not comply. (OR 1-99-914)

4.0 Instructions

NOTE: This section contains guidance pertaining to the Nuclear Regulatory Commission (NRC) Policy Statement on the Conduct of Nuclear Power Plant Operations.

The Main Control Room is an area used as the central control point for a highly complex facility. The control room environment needs to be maintained in such a manner that it is free from distractions and provides an atmosphere that is conducive to monitoring plant parameters. In order to maintain this environment, the following should be implemented:

4.1 Access to the Main Control Room: The main control room is the focal point of all plant operations. To minimize the distractions to the operators, minimize noise levels, and to promote plant safety the following is provided:

4.1.1 The AT-THE-CONTROLS-AREA access is limited to those persons on official business only and loitering in this area should be minimized.

4.1.2 The Shift Supervisor has the authority to restrict access to the At-The-Controls-Area during routine and emergency operation to those personnel necessary for evolutions in progress.

4.1.3 The AT-THE-CONTROLS-AREA is a restricted area and casual access for non-work related reasons is prohibited. In addition, plant personnel, who are not holding plant positions in the AT-THE-CONTROLS-AREA, should conduct plant-related technical/administrative business outside the AT-THE-CONTROLS-AREA when possible. (e.g., Two Shift Support Supervisors in general should not be in the AT-THE-CONTROLS-AREA, looking at a print, and discussing how to tag out the service water system. But, if this discussion requires input from the Shift Supervisor or another individual who is assigned a position in the AT-THE CONTROLS-AREA, then it would be appropriate for the discussion to be held in the AT-THE-CONTROLS-AREA.)

Any plant related business that has to be performed in the AT-THE-CONTROLS-AREA should be conducted at a location and in such a manner that licensed control room operator attentiveness will not be compromised. (This is not intended to prevent pre-job briefing or shift turnovers.)

4.1.4 During normal operation, permission to enter the AT-THE-CONTROLS-AREA for personnel other than the operations shift complement, operator extras, the licensed chain of command, and the NRC, must be obtained from the Shift Supervisor, UO or OATC.

During periods of abnormal or emergency operations, permission shall be obtained from the Shift Supervisor.

An individual must request permission to enter the area while waiting at the ATC ENTRANCE. The preferred method of entry into the control room is from the west ATC Entrance for Unit 1 business and from the east ATC Entrance for Unit 2 business. The Shift Supervisor can grant blanket permission for specific individuals to enter the AT-THE-CONTROLS-AREA on a case-by-case basis.

4.1.5 Only one individual associated with one job, unless the job is to be performed in the AT-THE-CONTROLS-AREA, will be permitted to enter the AT-THE-CONTROLS-AREA to discuss the specific job with the respective Shift Supervisor. (e.g., There may be a DR to repair a MCB indicator and two individuals are assigned to work the job. In this case it would be permissible for both individuals to come in the AT-THE-CONTROLS-AREA.) This discussion should take place in the vicinity of the respective Shift Supervisor's desk. Exceptions to this requirement will be specifically approved by the Shift Supervisor on a case-by-case basis.

4.1.6 Access to the MCB HORSESHOE AREA is restricted to the AT-THE-CONTROLS-AREA personnel and to the Shift Support Supervisor (SSS) when conducting STA responsibilities. No other individuals, including the remainder of the shift complement, will enter the MCB HORSESHOE AREA without first obtaining permission from the UO or OATC. Any individual in the MCB HORSESHOE AREA should attempt to minimize the time spent between the operator and the main control board.

4.1.7 The AT-THE-CONTROLS-AREA doors should normally be kept closed.

4.1.8 Permission to work in the RACK AREA must be granted by the respective unit's Shift Supervisor, UO or OATC.

4.2 Control Room Conduct Since the control room is the focal point for plant operations it needs to be operated in a professional manner and be free of distractions. In order to promote this philosophy, the following is provided:

4.2.1 Either the UO or OATC will normally have their attention directed toward the MCB. Consideration should be given to obtaining an additional operator to be present in the Control Room during busy times such as outage situations when both the OATC and UO could potentially become occupied with evolutions other than monitoring the MCB.

4.2.2 Personnel other than the UO and OATC who need to use the AT-THE-CONTROLS-AREA computer should use the TSC or Shift Supervisor's computer. The Shift Supervisor may authorize deviations from this requirement when he deems necessary.

4.2.3 Potentially distracting activities in the Main Control Room are prohibited (for example: radios, TV, games, horseplay, hobbies, polishing shoes, or sharpening knives).

4.2.4 Posting of signs, notes, pictures, etc. except for official company business is prohibited in the AT-THE-CONTROLS-AREA. Activities not related to company business should be minimized in the Main Control Room.

4.2.5 Normally, reading materials not related to the performance of work, power generation, nuclear power, or Southern Nuclear should be prohibited in the Main Control Room.

4.2.6 Personnel shall not prop their feet up on plant furniture that is not designed for that purpose when in the AT-THE-CONTROLS-AREA, Operations Office, or Technical Support Center. In addition, personnel should not sit on the desks in the AT-THE-CONTROLS-AREA.

4.2.7 The practice of sitting against/upon the MCB HORSESHOE AREA railing should be avoided. This practice could cause the inadvertent manipulation of a main control board switch.

4.2.8 Food or drink in the MCB HORSESHOE AREA is prohibited. It is permitted, though, on the upper platform and other areas of the AT-THE-CONTROLS-AREA. The intent of this policy is to minimize the possibility of inadvertently shorting out MCB components. Consideration should be given to obtaining a relief operator to be present in the Control Room during evolutions requiring the OATC to be in the MCB HORSESHOE AREA for an extended period of time when the UO is occupied with other evolutions.

4.2.9 Normally, only AT-THE-CONTROLS-AREA personnel should eat their meals in the AT-THE-CONTROLS-AREA. Food or drink should be minimized on the upper platform at the SS, UO and OATC desk areas (individual servings only).

4.2.10 All AT-THE-CONTROLS-AREA personnel should store their lunch boxes either under their respective desk or in the racks provided at the Main Control Room entrance.

4.2.11 No hard hats, motorcycle helmets, etc., are allowed in the AT-THE-CONTROLS-AREA except as noted below. These items should be stored in the racks provided at the entrance to the Main Control Room. Personnel assigned shift positions in the AT-THE-CONTROLS-AREA may carry their hard hats in the AT-THE-CONTROLS-AREA and store them under their desks.

4.3 Main Control Room Housekeeping

The Main Control Room should be maintained clean and orderly to enhance the control room environment. The following is provided to accomplish this objective:

4.3.1 The Main Control Room and TSC should normally be vacuumed and trash removed each night (including recyclables).

4.3.2 The Main Control Room should be dusted each week.

4.3.3 Main Control Board and EPB apron sections should normally be kept clean by the plant operators.

4.3.4 Procedures, books, and prints not in use should be put up.

4.3.5 Mishaps, spills, etc. that occur in the Main Control room, AT-THE CONTROLS-AREA, or TSC should be cleaned up immediately.

FIGURE 1

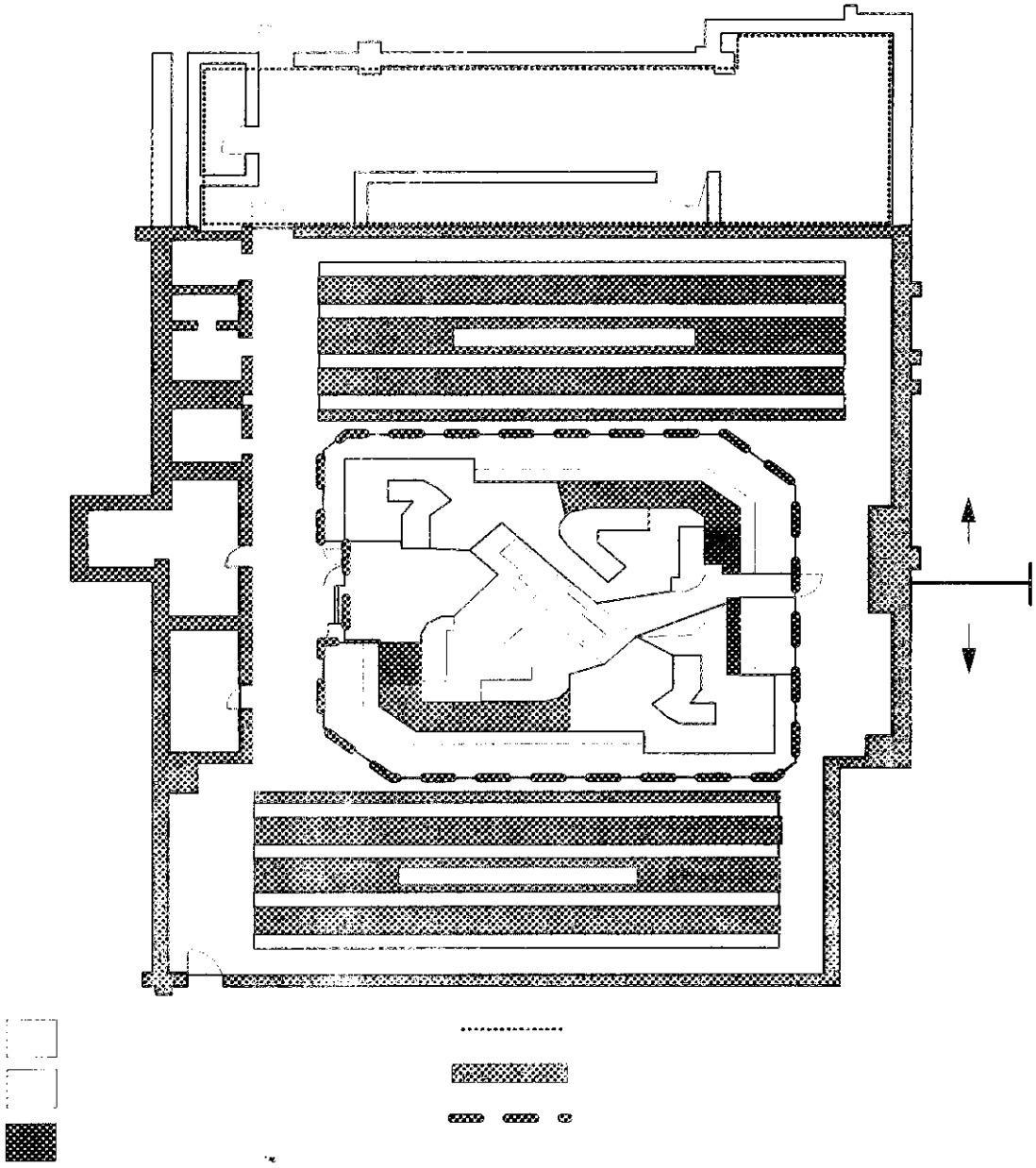

DOC
STO

CONTROL
ROOM
SUPPLY

Access to the Main Control Room:

The main control room is the focal point of all plant operations. To minimize the distractions to the operators, minimize noise levels, and to promote plant safety the following is provided:

- The AT-THE-CONTROLS-AREA (ATC) access is limited to those persons on official business only and loitering in this area should be minimized. The AT-THE-CONTROLS-AREA is the area encompassed by the glass doors, the Main Control Board (MCB), the Emergency Power Board (EPB), and the Nuclear Instrumentation/Radiation Monitoring System (NI/RMS) racks.
- The Shift Supervisor has the authority to restrict access to the AT-THE-CONTROLS-AREA during routine and emergency operation to those personnel necessary for evolutions in progress.
- The AT-THE-CONTROLS-AREA is a restricted area and casual access for non-work related reasons is prohibited.
- Any plant related business that has to be performed in the AT-THE-CONTROLS-AREA should be conducted at a location and in such a manner that licensed control room operator attentiveness will not be compromised.
- During normal operation, permission to enter the AT-THE-CONTROLS-AREA for personnel other than the operations shift complement, operator extras, the licensed chain of command, and the NRC, must be obtained from the Shift Supervisor, UO or OATC.
- During periods of abnormal or emergency operations, permission shall be obtained from the Shift Supervisor.
- An individual must request permission to enter the area while waiting at the ATC ENTRANCE. The ATC ENTRANCE is the area immediately inside the glass doors to the AT-THE CONTROLS-AREA.
- Only one individual associated with one job, unless the job is to be performed in the AT-THE-CONTROLS-AREA, will be permitted to enter the AT-THE-CONTROLS-AREA to discuss the specific job with the respective Shift Supervisor. (E.g., There

may be a DR to repair a MCB indicator and two individuals are assigned to work the job. In this case it would be permissible for both individuals to come in the AT-THE-CONTROLS-AREA.) This discussion should take place in the vicinity of the respective Shift Supervisor's desk. Exceptions to this requirement will be specifically approved by the Shift Supervisor on a case-by-case basis.

- Access to the MCB HORSESHOE AREA is restricted to the AT-THE-CONTROLS-AREA personnel and to the Shift Support Supervisor (SSS) when conducting STA responsibilities. No other individuals, including the remainder of the shift complement, will enter the MCB HORSESHOE AREA without first obtaining permission from the UO or OATC. Any individual in the MCB HORSESHOE AREA should attempt to minimize the time spent between the operator and the main control board.
- The AT-THE-CONTROLS-AREA doors should normally be kept closed.

Control Room Conduct

Since the control room is the focal point for plant operations it needs to be operated in a professional manner and be free of distractions. In order to promote this philosophy, the following is provided:

- Either the UO or OATC will normally have their attention directed toward the MCB. Consideration should be given to obtaining an additional operator to be present in the Control Room during busy times such as outage situations when both the OATC and UO could potentially become occupied with evolutions other than monitoring the MCB.
- MCB annunciators should be acknowledged promptly. The OATC or UO may obtain approval from the SS to leave an annunciator flashing for a longer period. During abnormal or emergency operations the OATC or UO may use his discretion to acknowledge annunciators depending on plant conditions.
- AT-THE-CONTROLS-AREA furniture is for main control room personnel only. The Shift Supervisor may authorize deviations from this requirement as necessary. (E.g., an individual will be taking data for an extended period).

Access to the Main Control Room

The main control room is the focal point of all plant operations. To minimize the distractions to the operators, minimize noise levels, and to promote plant safety the following is provided:

- The AT-THE-CONTROLS-AREA (ATC) access is limited to those persons on official business only and loitering in this area should be minimized. The AT-THE-CONTROLS-AREA is the area encompassed by the glass doors, the Main Control Board (MCB), the Emergency Power Board (EPB), and the Nuclear Instrumentation/Radiation Monitoring System (NI/RMS) racks.
- The Shift Supervisor has the authority to restrict access to the AT-THE-CONTROLS-AREA during routine and emergency operation to those personnel necessary for evolutions in progress.
- The AT-THE-CONTROLS-AREA is a restricted area and casual access for non-work related reasons is prohibited.
- Any plant related business that has to be performed in the AT-THE-CONTROLS-AREA should be conducted at a location and in such a manner that licensed control room operator attentiveness will not be compromised.
- During normal operation, permission to enter the AT-THE-CONTROLS-AREA for personnel other than the operations shift complement, operator extras, the licensed chain of command, and the NRC, must be obtained from the Shift Supervisor, UO or OATC.
- During periods of abnormal or emergency operations, permission shall be obtained from the Shift Supervisor.
- An individual must request permission to enter the area while waiting at the ATC ENTRANCE. The ATC ENTRANCE is the area immediately inside the glass doors to the AT-THE CONTROLS-AREA.
- Only one individual associated with one job, unless the job is to be performed in the AT-THE-CONTROLS-AREA, will be permitted to enter the AT-THE-CONTROLS-AREA to discuss the specific job with the respective Shift Supervisor. (E.g., There

61. G2.1.8 001/3/1/AP-60/MEM 3.8/3.6/MOD/FA011005/RO/

An oil spill has occurred from a non-PCB oil source in the Turbine Building. The oil has reached the Turbine Building sump and the sump pump is running releasing water to the environment. IAW AP-60, Oil Spill Prevention Control and Countermeasure Plan, Hazardous Waste Contingency Plan, the control room team should do which one of the following?

A. Dispatch the SSS to the scene, have the TB systems operator stop the sump pump, close and tag the discharge valve.

B. Dispatch the shift chemist to the scene, have the TB systems operator place the sump on recirc until the sump contents can be analyzed.

C. Dispatch the SSS to the scene, have the TB systems operator stop the sump pump only if the oil level gets low enough to reach the sump pump suction.

D. Dispatch the shift chemist to the scene, have the TB systems operator place the sump on recirc after the release is completed, and then close the discharge valve.

AP-60

A. **Dispatch the SSS to the scene, have the TB systems operator stop the sump pump, close and tag the discharge valve.**

AP-60 requires these actions SSS to the scene, stop the release and close and tag sump discharge valves.

B. Incorrect - The shift radiochemist is not required to be dispatched, though this may be a good idea, however chemistry supervision is required to be notified. The shift radiochemist is not necessarily supervision. The TBSO should not place the sump On recirc. With a release in progress the requirement is to stop the release.

C. Incorrect- The TBSO is required to stop the release immediately, not evaluate how much more water can be released. The release needs to analyzed prior to starting and needs supervisor approval to start it.

D. Incorrect - The shift radiochemist is not required to be dispatched, the release would not continue with oil going to it due to the potential for release to the environment, and the discharge valve would be closed, and also tagged.

G2.1.8 - Conduct of Operations - Ability to co-ordinate personnel activities outside the control room.

Given a situation involving an oil spill identify the actions that may need to be performed to limit the consequences of the spill (OPS40502F01).

Evaluate a non-PCB oil spill and determine the correct response (OPS52303F01).

modified from AP-60-52303F01 #3

Regional question

QUESTIONS REPORT

for g2.1.8 Questions

AP-60-52303F01 003/HLT/LOCT//C/A (LEVEL 2/3) PROC/G2.1.8///LOCT/

An oil spill has occurred from a non-PCB oil source. The oil has reached a sump in the area of the spill; the sump pump is running. The shift supervisor should:

A. Have the operator stop the sump pump only if the oil level gets low enough to reach the sump pump suction.

B. Have the operator stop the sump pump regardless of oil level in the sump.

C. Have the operator leave the pump running and place the sump in recirc until the sump contents can be analyzed.

D. Have the operator leave the pump running and direct the discharge to the floor drain tank until the sump contents can be analyzed.

AP-60

disposal instructions from Environmental Services for oil waste. If necessary, the emergency director can implement contracts with outside agencies to assist in cleanup of oil spills.

The U.S. Coast Guard and the Alabama Department of Environmental Management (ADEM) must be notified if the spill meets any of the definitions of an oil spill. The ADEM must be notified within 24 hours of a spill or leak that reaches soil or water from an underground storage tank that is suspect due to inventory records showing an unexplained loss, a confirmed leak occurs, an overfill of 25 gallons during transfer, or any overfill that causes a sheen on nearby waters.

The environmental services must be notified immediately for any large spill where additional off-site notification may be required. They must be notified the next day for all other spills.

No-PCB and Non-PCB Oil Spill Actions

Table 1 of AP-60 (Attachment 10) provides a listing of the items necessary for use in cleanup of spill. The materials and storage locations for use during oil spills are listed in this Table. The plant staff will, under the direction of the SS, perform the following:

- Obtain information from the person discovering the spill, concerning the location, source, and amount of the oil that has been spilled.
- Determine if it is a PCB spill by the label or Tables in AP-60 (Attachments 7, 8, and 9) if the spill involves a transformer.
- For leaking non-PCB transformers, control the cleanup waste. These include all pole-mounted transformers, those labeled non-PCB, or those listed in Tables in AP-60 (Attachments 7, 8, and 9).
- Dispatch a shift support supervisor immediately to the scene to evaluate the situation.
- Secure the sump pump if oil reaches a sump, close the sump discharge valves, and tag the discharge valves to prevent and inadvertent release.
- Notify the emergency director.
- Use oil absorbent material and any other available material to prevent as much oil as possible from reaching building sumps or area waters by building dikes and/or placing material directly on the oil.
- Contact Chemistry Supervision to coordinate sampling, cleanup, and decontamination.

- Attachment 10 lists the items necessary for use in cleanup of oil spill are maintained by Operations the Turbine Building Main Lube Oil Storage Tank Rooms.

Actions for PCB Spills

The plant staff, under the direction of the SS, will perform the following actions: (AP-60, Appendix 2)

Attempt to isolate the source of the spill or leak and use any means available to prevent the PCB fluid from entering sumps, drains, sewers, drainage, ditches, or any other place where water is flowing.

If the spill or leak has the potential for reaching building sumps, perform the following:

- Secure the sump pumps
- Close the sump discharge valves.
- Tag the discharge valves to prevent an inadvertent release.

It may be necessary to place oil absorbent material and any other available directly on the PCB waste. These materials may be used to build dikes to prevent as much PCB waste as possible from reaching building sumps.

Drip or catch pans may be used as a temporary measure if a leak exists on operating equipment to prevent the further contamination of other areas of equipment.

If the spill reaches area waters, place booms to contain any PCBs on the surface and take actions to limit the spread of PCBs and initiate cleanup.

If a fire occurs, evacuate the area with PCB smoke, use self-contained breathing apparatus (SCBA) for entry into the area and arrange for emergency support for clean up.

If the spill involves one pound or more of pure PCB but is contained on the site and does not enter area waters, then notify SNC Environmental Services, the U.S. Coast Guard National Response Center, ADEM, and the U.S. EPA.

If the spill is not contained on site and involves one pound or more of pure PCB, then notify SNC Environmental Services, the U.S. Coast Guard National Response Center (within 48 hours), the U.S. EPA, the State Emergency Response Commission (SERC), and the Local Emergency Planning Committee (LEPC).

If any amount of PCB discharge > 50 ppm enters area waters, notify SNC Environmental Services, the U.S. EPA, and the U.S. Coast Guard National Response Center.

occurrences and/or emergencies. Each patrolling security officer has a hand held 2-way radio for communications. Plant perimeters and site are patrolled routinely. Access to the facility is controlled by security personnel checking vehicles and checking personnel to assure only authorized individuals enter. During an emergency situation, security personnel shall allow only authorized individuals on-site.

4.7 Unloading of oils and chemicals is done in accordance with Department of Transportation regulations.

5.0 Procedure

5.1 Refer to Appendix 1 for guidance in regard to handling and reporting No-PCB and Non-PCB oil (natural or synthetic) spills.

5.2 Refer to Appendix 2 for guidance in regard to handling and reporting polychlorinated biphenyl (PCB) spills (≥ 50 ppm).

5.3 Refer to Appendix 3 for guidelines and requirements for handling and reporting hazardous waste emergency incidents.

5.4 Refer to Appendix 4 for guidelines and requirements for handling and reporting spills of hazardous substances and extremely hazardous substances.

5.5 Refer to Table 1 for a listing of equipment and supplies which are available for handling spills.

5.6 Refer to Figure 6 for a map of Main Power Block yard drainage.

5.7 In the event of a major spill where ground water contamination is possible, Chemistry will coordinate sampling of plant ground water observation wells per FNP-0-CCP-545.

5.8 Refer to Tables 4-7 for the location and oil capacity of plant transformers. There are no PCB or PCB-contaminated transformers at FNP.

6.0 Procedure Review

6.1 Whenever there is a change in facility design, construction, operation or maintenance which materially affects the plant's potential for the discharge of oil, this procedure will be revised within six months.

6.2 This procedure will be reviewed at least once every three years to incorporate changes in spill prevention and control technology.

SHARED

2.8.6 Control of oil bearing equipment/tanks will include an evaluation of the need for spill detection measures (e.g. inspections to ensure any leakage is discovered in a timely manner).

2.8.7 The need for an oil spill kit should also be evaluated.

3.0 Definitions

3.1 Spills reportable to offsite agencies:

3.1.1 The Environmental Protection Agency defines oil spillage as follows: "Discharges of such quantities of oil into or upon the navigable waters of the United States or adjoining shorelines determined to be harmful to the public health or welfare of the United States, at all times and locations and under all circumstances and conditions include discharges which violate applicable water quality standards or cause a film or sheen upon or discoloration of the surface of the water or adjoining shorelines or cause a sludge or emulsion to be deposited beneath the surface of the water or upon adjoining shorelines".

3.1.2 The State of Alabama Water Quality Criteria states the following in regard to oil in state waters: "State waters shall be free from floating debris, oil, scum, and other floating materials attributable to sewage, industrial wastes, or other wastes in amounts to be unsightly or interfere directly or indirectly with any classified water use."

3.1.3 The U.S. Coast Guard defines harmful quantities of oil as follows: "Harmful quantity means those quantities of oil, the discharge of which, at such time, locations, circumstances and conditions are determined to be harmful to the public health or welfare of the United States."

3.2 Underground Storage Tanks (UST) Release - Any release from an UST system to ground water, surface water, the surface of the land or subsurface soils. This includes releases from the above ground or below ground portions of an UST system and releases associated with overfills and transfer operations as the regulated substance moves to or from an UST.

4.0 Procedure

4.1 Spill

4.1.1 Immediate Response

The Shift Supervisor shall:

4.1.1.1 Obtain information from the person discovering the spill concerning the location, source and amount of oil that has been spilled.

SHARED

4.1.1.2 If the spill is from a transformer, or other electrical equipment (e.g. bushing, shunt reactor, etc.), determine if the spill involved PCBs based on equipment labeling or a review of the applicable Table:

Table 4	Overhead Power Line Pole and Misc. Transformers
Table 5	Plant Transformers
Table 6	Main Power Transformers (Low Voltage Switchyard)
Table 7	High Voltage Switchyard Oil Bearing Equipment

4.1.1.3 If the spill involves PCB or PCB Contaminated oil, go to Appendix 2.

NOTE: Non-PCB transformers do not have any legal requirements for control of spill waste as PCB bearing waste but company policy dictates that special measures will be used for disposal.

4.1.1.4 If the spill involves Non-PCB oil, all waste must be held for special disposal.

4.1.1.5 Dispatch a Shift Support Supervisor immediately to the scene to evaluate the situation.

4.1.1.6 Based on the source, location, and amount of oil spilled, take immediate action to stop the release and contain it to prevent it reaching area waters. Actions could include:

a. Stop the release if possible (e.g. turn off a pump, close a valve, turn a leaking container upright, etc.)

b. If oil is in a sump, secure the sump pump.

c. Erect a berm around the spill.

d. Cover drains to prevent oil from reaching sumps or area waters.

4.1.1.7 Notify the Emergency Director and Chemistry Supervision.

4.1.2 Supplemental Action

The Shift Supervisor shall direct these actions:

4.1.2.1 Use of oil absorbent material and any other available material (see Table 1) to prevent as much oil as possible from reaching building sumps or area waters by building dikes and/or placing material directly on the oil.

4.1.2.2 For an EHC oil spill, consider the following to determine the approach for clean up and safety precautions needed by workers:

a. EHC fluid has a specific gravity of ≈ 1.15. The fact that it is heavier than water must be considered during the cleanup and control of EHC spills. A small amount of EHC fluid may remain on the surface of a sump causing an oil sheen but most of it will sink to the bottom of the sump where it will be discharged by the sump pump. The portable oil separator will not skim EHC oil and oil booms will be largely ineffective.

b. Review Table 3 for precautions in working with EHC fluid.

4.1.2.3 If oil reaches a sump consider the following:

a. Maintain the water level above the pump suction.

b. Close the sump discharge valves.

c. Tag the discharge valve to prevent an inadvertent release.

d. Add an oil herding agent (such as Shell Oil Herder) as directed by the information on the product to concentrate the oil in a smaller area so absorbent material can be used more effectively.

4.1.2.4 Coordinate any chemical sampling and analysis with Chemistry Supervision.

4.1.2.5 Obtain authorization from the Emergency Director prior to releasing the contents of a sump which is known to contain an oil concentration in excess of NPDES limits.

4.1.2.6 Remove large quantities of oil from a sump or diked area, to prevent releasing it through a drain or pumping system, by contacting Chemistry Supervision to make arrangements for oil pickup.

4.1.2.7 Build containment dikes around yard drains in the vicinity of the spill and around the spill itself.

4.1.2.8 Use oil absorbent material to soak up the oil which is trapped within the dikes.

4.1.2.9 For spills and overfills from underground storage tanks involving less than 25 gallons, complete the clean up

SHARED

within 24 hours (Notify Environmental Services if this can not be done).

NOTE:	**Non-PCB oil waste will require special control as waste containing less than 50 ppm PCB.**

4.1.2.10 The Chemistry group will obtain disposal instructions from Environmental Services for oil waste.

4.2 The Emergency Director shall:

4.2.1 Request assistance, if deemed appropriate, from neighboring companies that have oil spill control capability (See EIP-8.1):

NOTE:	**An emergency response company is contracted by SNC and APCo. Spill equipment (booms, oil absorbent, drums, boats etc.) and manpower is on 24 hour standby. It is intended that they be utilized for a major spill beyond the capability of FNP cleanup resources.**

4.2.2 Consider implementing the emergency response contract (See EIP-8.1) or arranging with Environmental Services for other outside contractor support.

4.2.3 Chemistry Supervision follow-up requirements

Immediately following an emergency, provide for treating, storing, or disposing of recovered waste, contaminated soil, or surface water, or any other material that is hazardous as a result of the incident.

Ensure that in the affected area(s) of the site:

a. No waste that may be incompatible with the spilled material is treated, stored, or disposed of in the same container.

b. All applicable emergency equipment listed in the Contingency Plan (SPCC) is cleaned and fit for use before affected plant equipment is returned to operations.

c. Stocks of materials used in the cleanup are replenished.

5.0 <u>Notification</u>

5.1 Evaluate reportability against all of the following criteria:

5.1.1 Spill meets any of the definitions in 3.1 - 3.3 of this appendix.

NOTE:	**A release to the environment is a spill reaching soil or into uncontained waters. A spill of oil on a concrete pad is NOT a release to the environment.**

5.1.2 Spill or leak involving underground storage tanks (UST) that results in a release to the environment that meets any of the following criteria:

SHARED

5.1.2.1 Any suspected tank or piping release (may be indicated by inventory records that show a loss in the tank or unexplained petroleum vapors).

5.1.2.2 Any confirmed tank or piping release.

5.1.2.3 Any spill or overfill that exceeds 25 gallons which occurs during a transfer of product into or out of an UST.

5.1.2.4 Any spill or overfill that causes a sheen on nearby surface water.

5.2 Contact Environmental Services (ES) for all spills per one of the following:

5.2.1 For a large spill where additional off site notification may be required contact ES to obtain concurrence on additional reporting per 5.1.

OR

5.2.2 For a small spill contact ES on a next working day basis to notify them of the spill.

5.3 Make the following notifications immediately if an oil discharge meets the criteria in 5.1.1, Environmental Services will coordinate notification:

5.3.1 U.S. Coast Guard National Response Center

5.3.2 Alabama Department of Environmental Management

5.4 If the discharge meets criteria in Section 5.1.2 notify the Alabama Department of Environmental Management within 24 hours.

5.5 Ensure Figure 3 is completed and submitted to the Environmental Specialist.

5.6 The information will then be compiled and a complete report written by the Environmental Specialist.

5.7 This report shall be placed in file and a copy forwarded to Environmental Services.

6.0 <u>Receiving of bulk oil from vendors</u>

6.1 The Supervisor (or his designee) responsible for unloading a bulk (eg. tanker) shipment shall provide personnel at the location of unloading of any bulk quantities of oil.

6.2 The Supervisor shall ensure that personnel utilized on 6.1 are knowledgeable of the responsibility to never leave the vendor vehicle unattended during unloading and to ensure the vendor has been properly disconnected from the receiving point before the vendor drives away.

SHARED

7.0 General Inspections

Personnel shall:

7.1 Observe the general condition of oil storage and transfer equipment including storage tanks, containment dikes, valves, level indicators and transformers when rounds of the plant are made.

7.2 Report immediately to the Shift Supervisor any abnormalities which may be observed.

7.3 Any oil spill inspections not documented by permanent plant records utilized for other work will be documented on separate records and transmitted to Document Control. RType D2.22 and keyword "inspection" will be used unless specified otherwise in a written procedure.

8.0 Drainage of rainwater

8.1 Drain valves for containment dikes are normally closed and must be opened manually.

8.2 Visual inspection of the rainwater will be performed prior to discharge to ensure that no oil or oil sheen is present.

8.3 After draining, the drain valve will be closed.

8.4 A record of the discharge event will be kept on an appropriate log.

9.0 Integrity Testing

The Engineering Support (ES) Manager shall be responsible for scheduling, completing and documenting integrity tests at an appropriate interval. A PM task, assigned to ES, has been set up for tank inspections.

10.0 Training

The Plant Training and Emergency Preparedness Manager shall be responsible for scheduling, completing and documenting the required oil spill plan training. This training will normally be conducted annually.

SHARED

APPENDIX 2

POLYCHLORINATED BIPHENYLS (PCB)

1.0 Purpose

To establish general guidelines required by law which are necessary for the prevention of, response to, and reporting of spills of polychlorinated biphenyl (PCB) oils.

2.0 General

2.1 In an effort to control the use and disposal of PCB's, the Environmental Protection Agency (EPA) has adopted a concentration of 50 ppm above which regulations apply for any substance, mixture, or item. PCB's are chlorinated aromatic compounds which are widely dispersed in the environment and are found world wide at low concentrations. PCB's have been used widely in the past with little or no attempt to control their use or disposal. However, in recent years, concern has developed over PCB's chronic toxicity, pervasiveness, and persistence in the environment, as well as their ability to accumulate in food chains.

2.2 Federal Regulations have been developed under the Toxic Substance Control Act (TSCA) to control PCB's. Civil and criminal penalties may result from violation of these regulations.

3.0 Definitions

NOTE 1: Due to retrofill, there are no PCB transformers remaining at FNP.

NOTE 2: PCB contaminated equipment can be identified by labels. There are no PCB or PCB-contaminated transformers at FNP.

3.1 EPA has established federal guidelines which address three categories of PCB containing equipment based upon the part per million (ppm) concentration of the fluid.

3.1.1 PCB Transformers - PCB transformers are transformers that contain PCB's at a concentration of 500 ppm or greater.

3.1.2 PCB-Contaminated Equipment - PCB-contaminated transformers and equipment that contain 50 ppm or greater but less than 500 ppm PCB.

3.1.3 Non-PCB Transformers - Non-PCB Transformers are transformers that contain less than 50 ppm PCB and, as defined by APCo policy, greater than or equal to 1 ppm PCB.

62. G2.2.12 001/3/2/SURV PROCEDURES/MEM 3.0/3.4/BANK/FA011005/RO/

Plant procedures state that, to be in accordance with the Inservice Test Plan and ASME Code, timing of valve stroke times for an STP will be performed _____.

A. locally at the valve only.

B. utilizing the remote indicating lights only.

C. locally at the valve, but exceptions can be documented and approved on a case-by-case basis.

D. utilizing the remote indicating lights, but exceptions can be documented and approved on a case-by-case basis.

SOP-0 section 16.3
A. Incorrect - the remote indication is the normal indication to use. The local indication can be used but only with approval and proper documentation.

B. Incorrect - there are exceptions which allow the local timing to be used. Two exceptions are noted for PRF.

C. Incorrect- the remote indication is the normal indication to use, not locally at the valve.

D. Correct - **utilizing the remote indicating lights, but exceptions can be documented and approved on a case-by-case basis.**
SOP-0.0

16.3 For performance of valve inservice tests, the timing of valve stroke times locally at the valve, rather than using remote indication, is not in accordance with the Inservice Test Plan and ASME Code. Therefore, **timing of valve strokes in performance of inservice test will be performed utilizing the remote indicating lights. Exceptions will be documented and approved on a case by case basis** in the individual inservice test procedure. Examples include the penetration room filtration system dampers HV3356A (B) and HV3357A (B) on each unit. Timing of these dampers will continue to be performed locally in accordance with STP-20.0, PENETRATION ROOM FILTRATION SYSTEM TRAIN A(B) QUARTERLY OPERABILITY AND VALVE INSERVICE TEST.

G2.2.12 Equipment control -Knowledge of surveillance procedures.

State the general functions that personnel assigned to shift operations perform or are prepared to perform (SOER 96-01) (OPS40502H04).

INTRO TS-52302A09 #2

results reflect satisfactory performance of the valve repair/replacement of the valve and developing a new stroke time reference value and a new Acceptable Stroke Time Range.

16.2.3 Stroke times for corrective actions if exceeded are documented and annotated in book as to corrective action taken.

16.3 For performance of valve inservice tests, the timing of valve stroke times locally at the valve, rather than using remote indication, is not in accordance with the Inservice Test Plan and ASME Code. Therefore, timing of valve strokes in performance of inservice test will be performed utilizing the remote indicating lights. Exceptions will be documented and approved on a case by case basis in the individual inservice test procedure. Examples include the penetration room filtration system dampers HV3356A (B) and HV3357A (B) on each unit. Timing of these dampers will continue to be performed locally in accordance with STP-20.0, PENETRATION ROOM FILTRATION SYSTEM TRAIN A(B) QUARTERLY OPERABILITY AND VALVE INSERVICE TEST.

16.4 Mechanical agitation of solenoid valves during surveillance testing in order to obtain satisfactory performance is not permissible. (Ref PSEE 91-002)

16.5 If the initial conditions of a pump inservice STP direct action to clean the seal area, then evaluate the need to clean the seal area. If the seal area does not need to be cleaned, then N/A the step in accordance with FNP-0-AP-6. If the seal area needs cleaning, then secure the pump and ensure that it will not auto start. (OER Index 3053)

16.6 Prior to releasing any Inservice Valve for maintenance, the Inservice Test plan should be reviewed for the following applicable testing requirements: Exercise Test Requirements and Leak Rate Test Requirements (CR 2000005423)

16.7 When conducting a pump Inservice Test, if the test results are in the Alert Range, the STP is considered to have been completed satisfactorily. The administrative requirements specified in the procedure will then be followed as specified: (CR 2003003621)

16.7.1 IF a recorded Technical Specification required vibration is within the Alert Range, THEN generate a Condition Report to have the condition evaluated within 96 hours AND double the surveillance frequency until the cause of the deviation is determined and corrected and reference values are re-verified or new reference values are established.

16.7.2 IF Q/Qr for any combination is within the Alert Range, THEN record data for all combinations so that individual pump analysis can be performed, AND generate a Condition Report to have the condition evaluated within 96 hours, AND double the surveillance frequency until the cause of the deviation is determined and corrected and Qr is re-verified or a new Qr is established.

17.0 Deleted

availability. It is permissible, however, to temporarily adjust the thermostat setting for one or more fans in a room without affecting availability provided the following criteria are met:

- The fan thermostat set at 105 ° F is NOT adjusted
- The remaining fan thermostats are not raised above a setpoint of 100 ° F
- Thermostats that are adjusted are tracked and returned to their normal setting when the need for the elevated setting is complete.

Inservice Tests

The Inservice Test Plan specifies the ASME testing requirements for components that perform either by action or position, a safety related function. Component performance characteristic data for Inservice Plan pumps and valves shall be maintained in the control room in the form of a Surveillance Test data book and controlled by the Shift Supervisor. The measured characteristics from each Inservice Plan Surveillance Test shall be compared with the predetermined reference data in accordance with the test procedure.

If during Surveillance testing an IST Plan measured parameter compares unfavorably with the reference value, then the guidance given in the applicable STP will be followed. If a Engineering Support evaluation is written in response to the substandard parameter, a copy of the evaluation will be filed with the associated work request and/or LCO as applicable. If the evaluation identifies new baseline data for a pump or valve, then a new data sheet will be filled out, and the previous data sheet sent to an Operations Superintendent. A Plant Operator or Shift Support Supervisor and the Shift Supervisor will sign the new data sheet signifying that the superseded data has been replaced.

Under certain circumstances, new component baseline data must be developed or the previous baseline data confirmed by an inservice test conducted prior to returning the component to service. The following conditions necessitate either confirmation of the previous baseline data or establishment of a new baseline:

- Component repair
- Major component maintenance that could affect the component's performance. For valves this could include adjustment of stem packing, limit switches, or control system valves, and removal of bonnet, stem assembly, actuator, obturator (valve disc, plug, gate, etc.), or control system components.

Confirmation of the previous baseline data is accomplished by successful completion of the component's inservice test, i.e., valve stroke STP, quarterly pump STP, etc.

The following conditions necessitate establishment of a new baseline:

- Component changeout
- Engineering Support engineering evaluations requiring new baseline data
- Maintenance Support evaluations requiring new vibration baseline data

When new baseline data is developed, deviations between the previous and new reference values shall be identified and analyzed. Verification that the new values represent acceptable operation shall be documented in the record of tests.

If new vibration baseline data is required, THEN a return to service STP will be performed to obtain new vibration data. Operations will evaluate the data against the absolute limits of the inservice test plan. If satisfactory, the new data will be entered into the surveillance test data book as the new baseline data. The new baseline data will be forwarded to Maintenance Support.

If new baseline data is required for parameters other than vibration, THEN a minimum of two sets of data should be taken. The data sets can be taken within the performance of the same STP. The new data shall be sent to Engineering Support requesting the establishment of a new baseline reference value. Once this evaluation is received, the new reference value will be transferred to the surveillance test data book.

The Shift Supervisor is to review and initial each entry in the Surveillance Test Data Books on his/her shift. He/She will review the data and ensure the following:

- Data entered from the STP is accurately recorded.
- The stroke time recorded is within the Acceptable Stroke Time Range listed in the Valve Test Data Book or the appropriate corrective action has been taken as required by the test procedure. Corrective action could include having the surveillance test performed again and performing an evaluation to determine if the results reflect satisfactory performance of the valve repair/replacement of the valve and developing a new stroke time reference value and a new Acceptable Stroke Time Range.
- Stroke times for corrective actions if exceeded are documented and annotated in book as to corrective action taken.

For performance of valve inservice tests, the timing of valve stroke times locally at the valve, rather than using remote indication, is not in accordance with the Inservice Test Plan and ASME Code. Therefore, timing of valve strokes in performance of inservice test will be performed utilizing the remote indicating lights. Exceptions will be documented and approved on a case by case basis in the individual inservice test procedure.

When conducting a pump Inservice Test, if the test results are in the Alert Range, the STP is considered to have been completed satisfactorily. The administrative requirements specified in the procedure will then be followed

Missing or Unattached Identification Labels

The Systems Operators and Shift Support Supervisor on shift during their normal rounds will identify missing or unattached identification labels on valves and power plant equipment. Unattached labels should be permanently reattached to the component after positive component identification. A request for identification for components without labeling will be submitted in accordance with FNP-0-AP-25, Equipment Identification and Labeling, and temporary identification will be affixed to the component using a Plant Labeling Deficiency Tag. The Shift Support Supervisor and the Shift Supervisor shall review request forms, then submit them for label fabrication. WHEN labels are made, THEN they will be placed on the component and the temporary identification will be removed.

Turbine Building Bay Door Control

The Turbine Building bay doors should be maintained closed for the optimum efficiency of ventilation systems, to provide additional protection from the intrusion of dirt and foreign objects, and to maintain temperature control of the Unit 1 EH fluid system. The Shift Support Supervisor (SSS) should maintain control of these doors to ensure they are closed when not actively in use. The Turbine Building SO should periodically monitor the doors and notify the SSS when the doors are open with no active traffic through the doors. Security must be posted when the doors are open and the barrier is removed.

63. G2.2.28 001/3/2/FUEL HANDLING/C/A 2.6/3.5/MOD/FA011005/RO/

A reactor core re-load is in progress with ten assemblies loaded in the core. As the on-coming Unit Operator you have been given the following information during turnover:

- Both Source Range detectors ARE indicating counts.
- High Flux at Shutdown alarms are BLOCKED.
- Audible Source Range counts are selected to the Control Room only.
- Audible Source Range counts has just been lost in the control room.
- 1/M plot is being continuously perfomed and monitored.
- Scaffolding is being passed through the equipment hatch.
- One Reactor Operator is in the Control Room.

After reviewing the above information, your direction to the refueling SRO is to suspend Core Alterations because of which one of the following?

A. The High Flux at Shutdown alarm should be in service.

B. The equipment hatch is not closed and secured properly.

C. Audible Source Range Counts are not working in the control room.

D. At least two licensed Reactor Operators are required to be the Unit 1 control room.

A - Incorrect- Not required to be in service at this time. Allowed to be placed in the BLOCK position to prevent spurious alarms per P&L 3.3 of UOP-4.1

B - Incorrect - this was changed by Rev 25 of STP-18.4 and an admendment to TS 3.9.3, equipment hatch can be open during refueling. Changed 10-8-2004

C - Correct- **Audible Source Range Counts are not working in the control room.** UOP-4.1 P&Ls 3.1 and 3.5.4 and initial condition 2.25 state that at least one audible count rate shall be operating [during refueling] to alert of a possible dilution accident. TS allows fuel movement. TS allows fuel movement with audible Counts not in the CR provided a licenced operator is in CTMT to communicate with the CR to alert the operators of a possible dilution accident. Also Fuel movement can continue w/o any audible IAW TS if visual indication is in the CR. Our UOP-4.1 does not allow this and a TCN would be needed to allow this.

D - Incorrect- Only One RO required to be in the Control Room.

G2.2.28 Equipment control - Knowledge of new and spent fuel movement procedures.

Determine the appropriate action for given conditions during performance of UOP-4.1 (OPS40503B03).

modified from INTRO TS-52302A03 #26
Source: 2001 nrc exam

QUESTIONS REPORT
for 1 HLT-29 EXAM

G2.2.28 001/3/2/FUEL HANDLING/C/A 2.6/3.5/BANK/FA011005/RO/

original Mod. had due to TS change that makes C incorrect.

A reactor core re-load is in progress with ten assemblies loaded in the core. As the on-coming Shift Supervisor you have been given the following information during turnover:

- Both Source Range detectors ARE indicating counts.
- High Flux at Shutdown alarms are BLOCKED.
- Source Range counts are audible in containment.
- Containment Normal Purge is in service.
- Scaffolding is being passed through the equipment hatch.
- One Reactor Operator is in the Control Room.
- The RHR system has been secured for 10 minutes to support surveillances that expect to take 40 minutes to complete.

After reviewing the above information, your direction to the refueling SRO is to suspend Core Alterations because of which ONE of the following?

A. The RHR system requirements are not met.

B. The High Flux at Shutdown alarm should be in service.

C. The equipment hatch is not closed and secured properly.

Correct now

D. At least two licensed Reactor Operators are required to be the Unit 1 control room.

A - Incorrect- TS 3.9.4 allows the system to be removed from operation for < 1 hour per 8 hour period, provided no operations are permitted that would cause reduction of the RCS boron concentration.

B - Incorrect- Not required to be in service at this time.

C - Correct - **The equipment hatch is not closed and secured properly.**
Violation of TS 3.9.3, equipment hatch must be in place with four bolts.

D - Incorrect- Only One RO required to be in the Control Room.

G2.2.28 Equipment control - Knowledge of new and spent fuel movement procedures.

Determine the appropriate action for given conditions during performance of UOP-4.1 (OPS40503B03).

INTRO TS-52302A03 #26
Source: 2001 nrc exam

5.0 ADMINISTRATIVE CONTROLS

5.2 Organization

5.2.1 Onsite and Offsite Organizations

Onsite and offsite organizations shall be established for unit operation and corporate management, respectively. The onsite and offsite organizations shall include the positions for activities affecting safety of the nuclear power plant.

a. Lines of authority, responsibility, and communication shall be defined and established throughout highest management levels, intermediate levels, and all operating organization positions. These relationships shall be documented and updated, as appropriate, in organization charts, functional descriptions of departmental responsibilities and relationships, and job descriptions for key personnel positions, or in equivalent forms of documentation. These requirements shall be documented in the FSAR;

b. The General Manager - Nuclear Plant shall be responsible for overall safe operation of the plant and shall have control over those onsite activities necessary for safe operation and maintenance of the plant;

c. The Vice-President shall have corporate responsibility for overall plant nuclear safety and shall take any measures needed to ensure acceptable performance of the staff in operating, maintaining, and providing technical support to the plant to ensure nuclear safety; and

d. The individuals who train the operating staff, carry out health physics, or perform quality assurance functions may report to the appropriate onsite manager; however, these individuals shall have sufficient organizational freedom to ensure their independence from operating pressures.

5.2.2 Unit Staff

The unit staff organization shall include the following:

a. A non-licensed operator shall be assigned to each reactor containing fuel and an additional non-licensed operator shall be assigned for each control room from which a reactor is operating in MODES 1, 2, 3, or 4. With both units in MODES 5 or 6 or defueled, a total of three non-licensed operators are required.

(continued)

5.2 Organization

5.2.2 Unit Staff (continued)

b. At least one licensed Reactor Operator (RO) shall be present in the control room when fuel is in the reactor. In addition, while the unit is in MODE 1, 2, 3, or 4, at least one licensed Senior Reactor Operator (SRO) shall be present in the control room. A single SRO may fill this position for both units.

c. Shift crew composition may be less than the minimum requirement of 10 CFR 50.54(m)(2)(i) and 5.2.2.a and 5.2.2.g for a period of time not to exceed 2 hours in order to accommodate unexpected absence of on-duty shift crew members provided immediate action is taken to restore the shift crew composition to within the minimum requirements.

d. A Health Physics Technician shall be on site when fuel is in the reactor. The position may be vacant for not more than 2 hours, in order to provide for unexpected absence, provided immediate action is taken to fill the required position.

e. Administrative procedures shall be developed and implemented to limit the working hours of unit staff who perform safety related functions (e.g., licensed SROs, licensed ROs, health physicists, auxiliary operators, and key maintenance personnel).

Adequate shift coverage shall be maintained without routine heavy use of overtime. The objective shall be to have operating personnel work a nominal 40 hour week while the unit is operating. However, in the event that unforeseen problems require substantial amounts of overtime to be used, or during extended periods of shutdown for refueling, major maintenance, or major plant modification, on a temporary basis the following guidelines shall be followed:

1. An individual should not be permitted to work more than 16 hours straight, excluding shift turnover time;

2. An individual should not be permitted to work more than 16 hours in any 24 hour period, nor more than 24 hours in any 48 hour period, nor more than 72 hours in any 7 day period, all excluding shift turnover time;

(continued)

BASES

APPLICABLE SAFETY ANALYSES

Two OPERABLE source range neutron flux monitors are required to provide a signal to alert the operator to unexpected changes in core reactivity. The audible count rate from the source range neutron flux monitors provides prompt and definite indication of any boron dilution. The count rate increase is proportional to the subcritical multiplication factor and allows operators to promptly recognize the initiation of a boron dilution event. Prompt recognition of the initiation of a boron dilution event is consistent with the assumptions of the safety analysis and is necessary to assure sufficient time is available for isolation of the primary water makeup source before SHUTDOWN MARGIN is lost (Ref. 2). The High-Flux at Shutdown Alarm, because of the delay for the neutron flux to reach the alarm setpoint, does not provide prompt indication of the initiation of a boron dilution event and the delay introduced by the alarm setpoint is not consistent with the assumptions of the safety analysis.

The source range neutron flux monitors satisfy Criterion 3 of 10 CFR 50.36(c)(2)(ii).

LCO

This LCO requires that two source range neutron flux monitors be OPERABLE to ensure that redundant monitoring capability is available to detect changes in core reactivity. To be OPERABLE each channel of source range instrumentation must provide visual indication in the control room. In addition, one channel of audible count rate must be available to alert the operators to the initiation of a boron dilution event. The preferred location of the required audible count rate is in the control room. In the case where the required audible count rate is only available in containment, it is acceptable to station a licensed operator in containment to communicate with the control room and alert the operators to a possible dilution accident. In the event that the required channel of audible count rate is lost, all unborated water sources must be isolated. The isolation of unborated water sources precludes a boron dilution accident. Once actions are initiated to isolate the unborated water sources, they must be continued until all the necessary flow paths are isolated. Movement of fuel may continue provided two channels of source range visual indication are available in the control room.

3.9 REFUELING OPERATIONS

3.9.2 Nuclear Instrumentation

LCO 3.9.2 Two source range neutron flux monitors and one channel of audible count rate shall be OPERABLE.

APPLICABILITY: MODE 6.

ACTIONS

CONDITION	REQUIRED ACTION		COMPLETION TIME
A. One source range neutron flux monitor inoperable.	A.1	Suspend CORE ALTERATIONS.	Immediately
	AND		
	A.2	Suspend positive reactivity additions.	Immediately
B. Two source range neutron flux monitors inoperable.	B.1	Initiate action to restore one source range neutron flux monitor to OPERABLE status.	Immediately
	AND		
	B.2	Perform SR 3.9.1.1.	Once per 12 hours
C. No audible count rate.	C.1.	Initiate action to isolate unborated water sources.	Immediately

NOTE: The Scaler-Timer may be verified to be operating properly by performing an operational check per SOP-39.0. If performed, then ensure it is restored to a normal alignment.

____ / __ 2.25 At least one source range nuclear instrument channel N-31 or N-32, has an audible count rate in the control room or in containment using a stationed licensed operator who will communicate with control room if required to alert them of a possible dilution accident.

NOTE: Step 2.8 may be performed at the same time as step 2.26.

2.26 Prior to lowering the reactor coolant water level to the vessel head flange following reactor shutdown, perform the following:

____ / __ 2.26.1 Perform a containment integrity assessment for Mid-Loop integrity and maintain the assessment current per one of the following methods.

____ / __ 2.26.1.1 Perform Mid-Loop Integrity assessment for Mid-Loop integrity per FNP-1-STP-18.4, CONTAINMENT MID-LOOP AND/OR REFUELING INTEGRITY VERIFICATION AND CONTAINMENT CLOSURE.

OR

____ / __ 2.26.1.2 For the initial draindown to the vessel head flange following reactor shutdown an assessment may be performed based on maintenance released which could potentially impact midloop integrity. To maintain a valid assessment administrative controls (LCO tracking sheet) will be maintained to ensure the assessment is revised to reflect any changes to the penetrations subsequent to the performance of the assessment.

____ / __ MM 2.26.2 A Maintenance Closure Response Team (MCRT) is staffed and briefed with sufficient personnel, having the necessary tools and procedures staged, to facilitate rapid closure of the CTMT Equipment Hatch. This crew is normally staffed by the maintenance crew assigned to reactor disassembly. The MCRT Leader is identified to the MCR staff to ensure rapid notification if a loss of RHR event were to occur.

NOTE: Appendix 3 is meant to be a guide and can be changed by the Outage Manager depending on special plant conditions.

____ / ____ 2.26.3 Appendix 3 has been approved and appropriately distributed by the Outage Manager.

____ / ____ 2.26.4 A briefing has been performed by the Senior Line Manager of all involved personnel. This briefing requires completion of the AP-92, BRIEFING CHECKLIST FOR THE CONDUCT OF INFREQUENTLY PERFORMED TESTS OR EVOLUTIONS. The completed briefing form should be attached to this procedure for document tracking purposes. Draining to the vessel flange (129'7") or mid plane (123'3" to 123'5") will be designated an IPTE and require Senior Line Manager Oversight. (IN-97-83)

____ / ____ 2.27 RCS temperature < 140°F.

____ / ____ 2.28 Training has been completed on recent refueling equipment design changes for the appropriate personnel. (Commitment 94-13-01)

RF coordinator

3.0 Precautions and Limitations

3.1 At least two source range neutron flux monitors shall be operating, each with continuous visual indication in the control room AND one channel of audible count rate in the control room or in containment using a stationed licensed operator that will communicate with control room if required to alert them of a possible dilution accident.

3.2 The Gamma-Metrics source range channel may only be used as a back-up to N-31 or N-32 during certain core configurations. The Refueling Coordinator should be consulted if N-31 or N-32 becomes inoperable when the core is not fully loaded.

3.3 The High Flux at Shutdown alarm serves as an additional monitor of neutron flux during stable flux conditions. During core reload, continually changing neutron flux is being closely monitored by performance of a 1/M plot. The High Flux at Shutdown alarm may be placed in the BLOCK position to prevent spurious alarms in containment.

3.4 IF the High Flux at Shutdown alarm is actuated, THEN all personnel will evacuate the containment in an orderly manner. IF the alarm is actuated during movement of fuel, THEN return the fuel to the position it occupied prior to the alarm before evacuating the containment.

3.5 Core Alterations will be suspended if any of the following events occur during any core alteration evolution.

3.5.1 An unexpected increase in the count rate by a factor of 2 on both required channels (N31, N32, N48) or by a factor of 5 on one required channel.

3.5.2 One required source range detector becomes inoperable.

3.5.3 Whenever a fuel assembly is damaged.

3.5.4 IF the audible neutron count rate in the control room stops, THEN check to see if it is working in containment AND station a licensed operator that will communicate with control room if required to alert them of a possible dilution accident. IF there is no count rate in containment either, THEN it may be restored to containment by selecting the alternate input channel using the selector switch in the rear of the audio count rate drawer. It will be necessary to station a licensed operator that will communicate with the control room, if required, to alert them of a possible dilution accident.

3.6 IF core alterations are suspended per 3.5, THEN movement will not be resumed without authorization of the Senior Reactor Operator in charge of fuel handling.

3.7 With the exception of a core unload, should the fuel shuffle/movement be suspended for a period of more than four hours, new normalized source range baseline data shall be obtained.

3.8 With the exception of a core unload, the Inverse Count Rate Ratio will be monitored during all phases of the fuel shuffle/movement. At any time should the ICRR fall below 0.4, the shuffle/movement will be stopped, the situation analyzed and the Refueling SRO notified prior to proceeding.

3.9 The radiation levels near the surface of the water in the reactor cavity and spent fuel pit shall be monitored. IF a significant increase in radiation levels is experienced, THEN the SRO in charge of refueling shall be notified and corrective action taken.

3.10 An overall refueling map indicating the status of each fuel assembly and insert shall be maintained.

3.9 REFUELING OPERATIONS

3.9.3 Containment Penetrations

LCO 3.9.3 The containment penetrations shall be in the following status:

a. The equipment hatch is capable of being closed and held in place by four bolts;

b. One door in each air lock closed; and

c. Each penetration providing direct access from the containment atmosphere to the outside atmosphere either:

1. closed by a manual or automatic isolation valve, blind flange, or equivalent, or

2. capable of being closed by an OPERABLE Containment Purge and Exhaust Isolation System.

APPLICABILITY: During CORE ALTERATIONS,
During movement of irradiated fuel assemblies within containment.

ACTIONS

CONDITION	REQUIRED ACTION	COMPLETION TIME
A. One or more containment penetrations not in required status.	A.1 Suspend CORE ALTERATIONS.	Immediately
	AND	
	A.2 Suspend movement of irradiated fuel assemblies within containment.	Immediately

SURVEILLANCE REQUIREMENTS

SURVEILLANCE		FREQUENCY
SR 3.9.3.1	Verify each required containment penetration is in the required status.	7 days
SR 3.9.3.2	Verify each required containment purge and exhaust valve actuates to the isolation position on an actual or simulated actuation signal.	18 months
SR 3.9.3.3	NOTE Only required for an open equipment hatch. Verify the capability to install the equipment hatch.	7 days

B 3.9 REFUELING OPERATIONS

B 3.9.3 Containment Penetrations

BASES

BACKGROUND

During CORE ALTERATIONS or movement of irradiated fuel assemblies within containment, a release of fission product radioactivity within containment will be restricted from escaping to the environment when the LCO requirements are met. In MODES 1, 2, 3, and 4, this is accomplished by maintaining containment OPERABLE as described in LCO 3.6.1, "Containment." In MODE 6, the potential for containment pressurization as a result of an accident is not likely; therefore, requirements to isolate the containment from the outside atmosphere can be less stringent. The LCO requirements are referred to as "refueling integrity" rather than "containment OPERABILITY." Refueling integrity means that all potential escape paths are closed or capable of being closed. Since there is no potential for containment pressurization, the 10 CFR 50, Appendix J leakage criteria and tests are not required.

The containment serves to contain fission product radioactivity that may be released from the reactor core following an accident, such that offsite radiation exposures are maintained well within the requirements of 10 CFR 100. Additionally, the containment provides radiation shielding from the fission products that may be present in the containment atmosphere following accident conditions.

The containment equipment hatch, which is part of the containment pressure boundary, provides a means for moving large equipment and components into and out of containment. If closed, the equipment hatch must be held in place by at least four bolts. Good engineering practice dictates that the bolts required by this LCO be approximately equally spaced. Alternatively, the equipment hatch can be open provided it can be installed with a minimum of four bolts holding it in place.

The containment air locks, which are also part of the containment pressure boundary, provide a means for personnel access during MODES 1, 2, 3, and 4 unit operation in accordance with LCO 3.6.2, "Containment Air Locks." Each air lock has a door at both ends. The doors are normally interlocked to prevent simultaneous opening when containment OPERABILITY is required. During periods of unit shutdown

(continued)

BASES

BACKGROUND (continued)

isolation valve, a manual isolation valve, blind flange, or equivalent. Equivalent isolation methods allowed under the provisions of 10 CFR 50.59 may include use of a material that can provide a temporary, atmospheric pressure, ventilation barrier for the other containment penetrations during CORE ALTERATIONS or movement of irradiated fuel assemblies within containment (Ref. 1).

APPLICABLE SAFETY ANALYSES

During CORE ALTERATIONS or movement of irradiated fuel assemblies within containment, the most severe radiological consequences result from a fuel handling accident. The fuel handling accident is a postulated event that involves damage to irradiated fuel (Ref. 2). The fuel handling accident analyzed includes dropping a single irradiated fuel assembly. The requirements of LCO 3.9.6, "Refueling Cavity Water Level," and the minimum decay time of 100 hours prior to CORE ALTERATIONS ensure that the release of fission product radioactivity, subsequent to a fuel handling accident, results in doses that are well within the guideline values specified in 10 CFR 100. Standard Review Plan, Section 15.7.4, Rev. 1 (Ref. 3), defines "well within" 10 CFR 100 to be 25% or less of the 10 CFR 100 values. The acceptance limits for offsite radiation exposure will be 25% of 10 CFR 100 values.

Containment penetrations satisfy Criterion 3 of 10 CFR 50.36(c)(2)(ii).

LCO

This LCO limits the consequences of a fuel handling accident in containment by limiting the potential escape paths for fission product radioactivity released within containment. The LCO requires any penetration providing direct access from the containment atmosphere to the outside atmosphere to be closed except for the OPERABLE containment purge and exhaust penetrations and the equipment hatch. For the OPERABLE containment purge and exhaust penetrations, this LCO ensures that these penetrations are isolable by the Containment Purge and Exhaust Isolation System. For the equipment hatch, closure capability is provided by a designated trained hatch closure crew and the necessary equipment. The OPERABILITY requirements for LCO 3.3.6, "Containment Purge and Exhaust Isolation Instrumentation," ensure that the automatic purge and exhaust valve closure times specified in the FSAR can be

(continued)

BASES

LCO (continued)

achieved and, therefore, meet the assumptions used in the safety analysis to ensure that releases through the valves are terminated, such that radiological doses are within the acceptance limit.

The equipment hatch is considered isolable when the following criteria are satisfied:

1. the necessary equipment required to close the hatch is available,
2. at least 23 feet of water is maintained over the top of the reactor vessel flange in accordance with Specification 3.9.6,
3. a designated trained hatch closure crew is available.

The equipment hatch opening must be capable of being cleared of any obstruction so that closure can be achieved as soon as possible.

APPLICABILITY

The containment penetration requirements are applicable during CORE ALTERATIONS or movement of irradiated fuel assemblies within containment because this is when there is a potential for a fuel handling accident. In MODES 1, 2, 3, and 4, containment penetration requirements are addressed by LCO 3.6.1. In MODES 5 and 6, when CORE ALTERATIONS or movement of irradiated fuel assemblies within containment are not being conducted, the potential for a fuel handling accident does not exist. Therefore, under these conditions no requirements are placed on containment penetration status.

ACTIONS

A.1 and A.2

If the containment equipment hatch, air locks, or any containment penetration that provides direct access from the containment atmosphere to the outside atmosphere is not in the required status, including the Containment Purge and Exhaust Isolation System not capable of automatic actuation when the purge and exhaust valves are open, the unit must be placed in a condition where the isolation function is not needed. This is accomplished by immediately suspending CORE ALTERATIONS and movement of irradiated fuel assemblies within containment. Performance of these actions shall not preclude completion of movement of a component to a safe position.

BASES

SURVEILLANCE REQUIREMENTS

SR 3.9.3.1

This Surveillance demonstrates that each of the containment penetrations required to be in its closed position is in that position. The Surveillance on the open purge and exhaust valves will demonstrate that the valves are not blocked from closing. Also, the Surveillance will demonstrate that each valve operator has motive power, which will ensure that each valve is capable of being closed by an OPERABLE automatic containment purge and exhaust isolation signal.

The Surveillance is performed every 7 days during CORE ALTERATIONS or movement of irradiated fuel assemblies within containment. The Surveillance interval is selected to be commensurate with the normal duration of time to complete fuel handling operations. A surveillance before the start of refueling operations will provide two or three surveillance verifications during the applicable period for this LCO. As such, this Surveillance ensures that a postulated fuel handling accident that releases fission product radioactivity within the containment will not result in a release of fission product radioactivity to the environment.

SR 3.9.3.2

This Surveillance demonstrates that each containment purge and exhaust valve actuates to its isolation position on manual initiation or on an actual or simulated high radiation signal from each of the containment purge radiation monitoring instrumentation channels. The 18 month Frequency maintains consistency with other similar ESFAS instrumentation and valve testing requirements. In LCO 3.3.6, the Containment Purge and Exhaust Isolation instrumentation requires a CHANNEL CHECK every 12 hours and a COT every 92 days to ensure the channel OPERABILITY during refueling operations. Every 18 months a CHANNEL CALIBRATION is performed. The system actuation response time is demonstrated every 18 months, during refueling, on a STAGGERED TEST BASIS. SR 3.6.3.4 demonstrates that the isolation time of each valve is in accordance with the Inservice Testing Program requirements. These Surveillances performed during MODE 6 will ensure that the valves are capable of closing after a postulated fuel handling accident to limit a release of fission product radioactivity from the containment.

(continued)

BASES

SURVEILLANCE REQUIREMENTS

SR 3.9.3.3

The equipment hatch is provided with a set of hardware, tools, and equipment for moving the hatch from its storage location and installing it in the opening. The required set of hardware, tools, and equipment shall be inspected to ensure that they can perform the required functions.

The 7 day frequency is adequate considering that the hardware, tools, and equipment are dedicated to the equipment hatch and not used for any other functions.

The SR is modified by a Note which only requires that the surveillance be met for an open equipment hatch. If the equipment hatch is installed in its opening, the availability of the means to install the hatch is not required.

REFERENCES

1. GPU Nuclear Safety Evaluation SE-0002000-001, Rev. 0, May 20, 1988.

2. FSAR, Section 15.4.5.

3. NUREG-0800, Section 15.7.4, Rev. 1, July 1981.

QUESTIONS REPORT

for Plant Systems Questions 6-11-2004

UOP4.1-52511B02 005/HLT/LOCT/RO/C/A (LEVEL 2/3) SYS/G2.1.33/3.9.2//LOCT/

You are in charge of fuel handling as the Refueling SRO. Which of the following conditions would require you to "Immediately suspend all operations involving CORE ALTERATIONS or positive reactivity changes"?

A. Audible source range count rate in containment is lost

B. Communications is lost between the manipulator crane and the spent fuel pool

C. The containment purge exhaust dampers fail shut

D. Water level is 23.1 feet above the vessel flange when one RHR train is declared inoperable

Technical Specification 3.9.2

64. G2.2.3 001/3/2/RCP/C/A 3.1/3.3/NEW/FA011005/RO/

Both Units are operating at 22% power. Both units 4160v Busses A, B and C are powered from their respective Startup Transformers.

Due to Severe Weather, 2A Startup Transformer and 1B Startup Transformer trip due to Sudden Pressure.

Which one of the following shows the correct Reactor Coolant Pumps (RCPs) that **will** be running after the event?

A. 2A RCP and 1A RCP.

B. 2B and 2C RCPs and 1A RCP.

C. 2A RCP and 1B and 1C RCPs.

D. 2B and 2C RCPs and 1B and 1C RCPs.

Unit 2 - 2A SU Xformer supplies power to the 2B and 2C 4160v bus.
Unit 1 - 1B Startup Transformer supplies power to the 1B and 1C 4160v bus.
This is a difference between the units in that U-2 has a different SU xformer supplies to the SU busses than U-1.

A.Correct- **2A RCP and 1A RCP.**
Since 2A and 1B SU xformer trips this means 2B and 2C and 1B and 1C RCPs will be tripped. Therefore the 2A and 1A RCPs will be running.

B. Incorrect - This is for the 2B SU and the 1B SU tripping.

C. Incorrect - This is for the 2A SU and the 1A SU tripping.

D. Correct - This is for the 2B SU and the 1A SU tripping.

G2.2.3 Equipment control - (multi-unit) Knowledge of the design, procedural and operational differences between units.

Identify the power supply for the following (OPS40301D04):
• Reactor coolant pumps (A, B and C)
Identify the power supply for each major electrical component associated with the Intermediate and Low Voltage AC Distribution System including (OPS40102B04):
• 4160V AC Buses

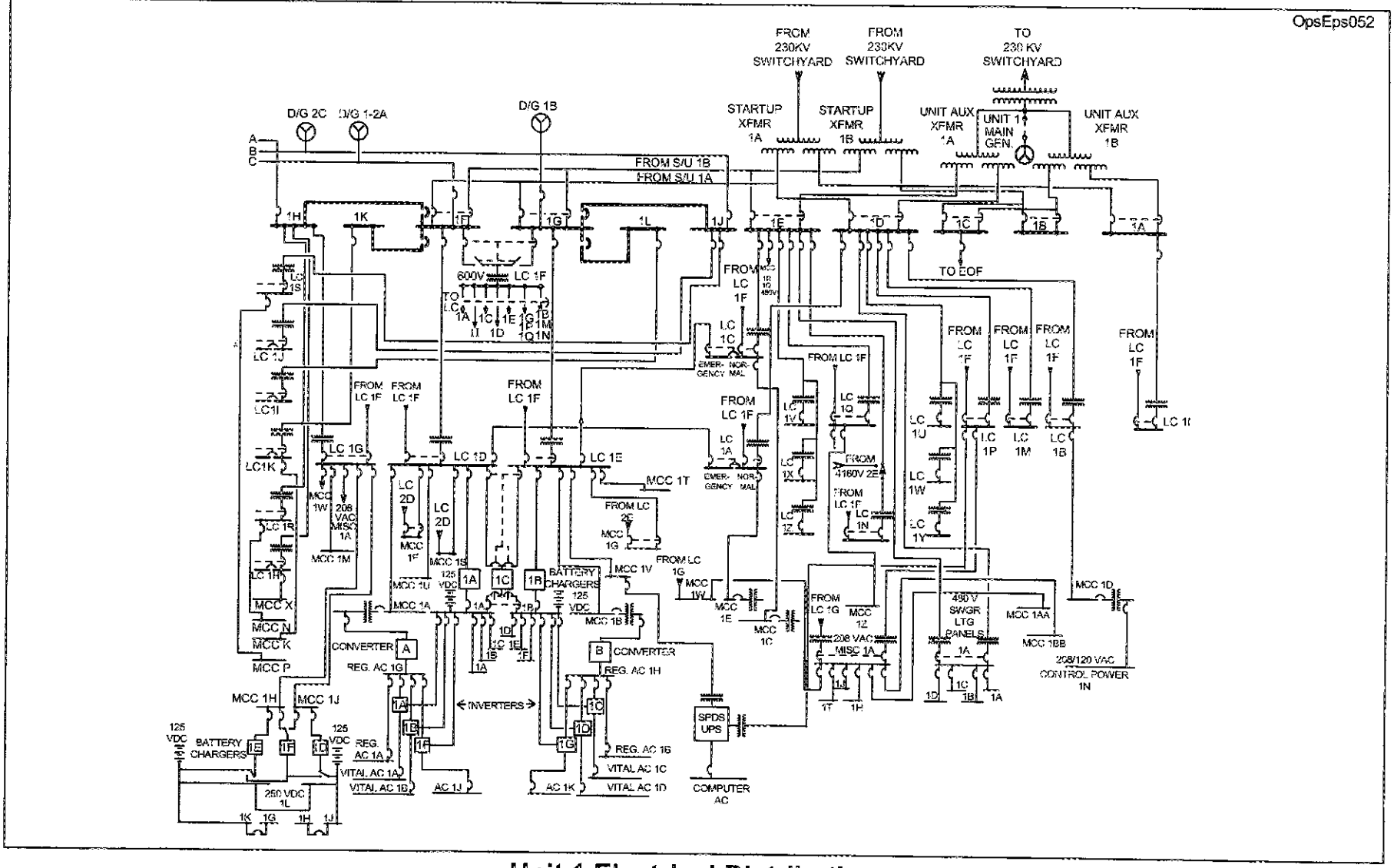

Unit 1 Electrical Distribution

Figure 1

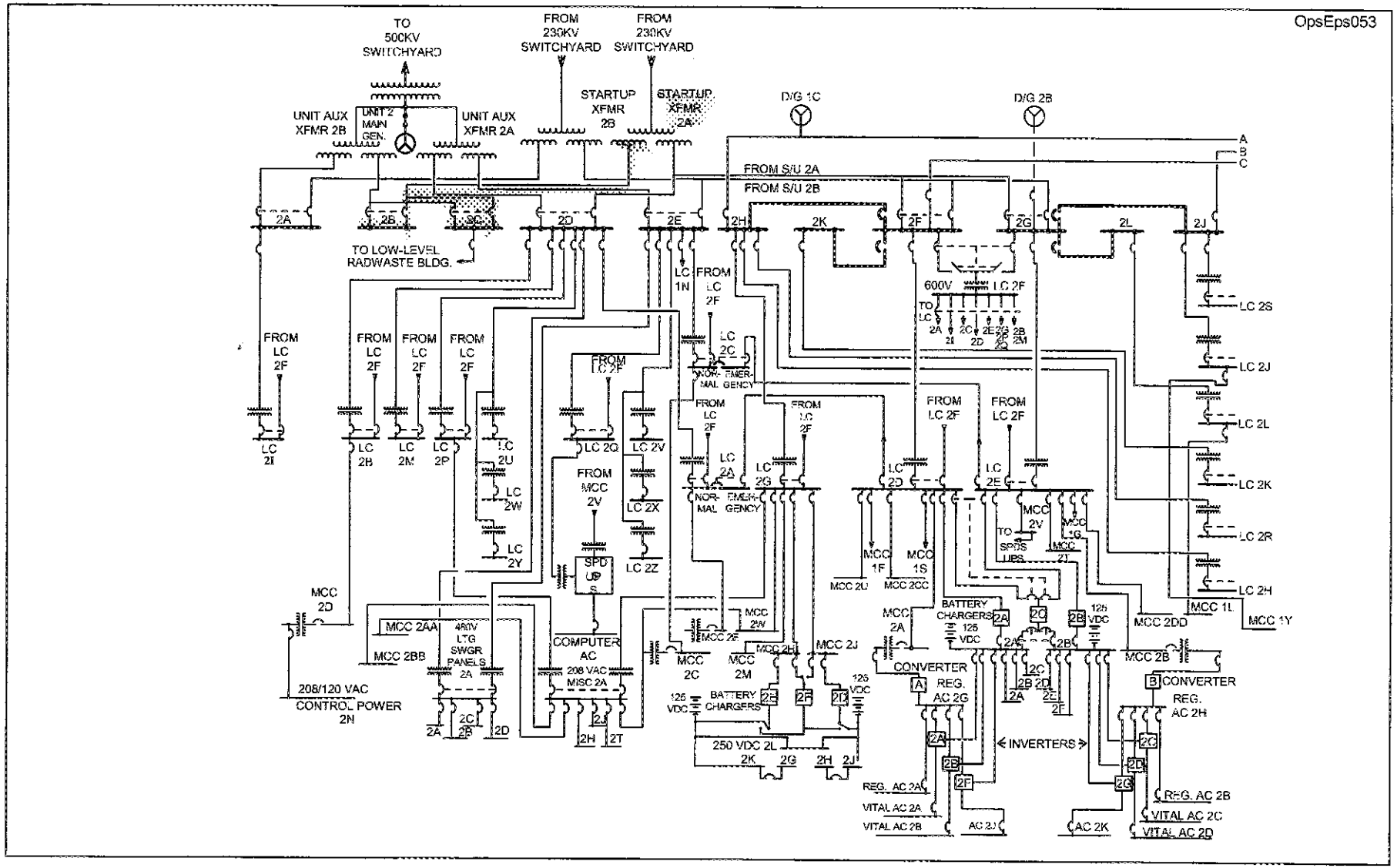

Unit 2 Electrical Distribution

Figure 2

65. G2.3.2 001/3/3/ALARA/MEM 2.5/2.9/BANK/FA011005/RO/

A valve four feet inside a valve room is producing a 0.2 R/hr field at one feet (30 centimeters) from the valve.

Which one of the following identifies the proper posting requirement for this room?

A. CAUTION, RADIATION AREA

B. CAUTION, HIGH RADIATION AREA

C. DANGER, EXCLUSION AREA

D. GRAVE DANGER, VERY HIGH RADIATION AREA

$D_1 R_1^2 = D_2 R_2^2$

$\frac{D_1 R_1^2}{R_2^2} = D_2$

$200\,mR\,(30\,cm)^2 = D\,100^2\,cm$

$= D$

$200\,(900) = D =$

$10{,}000 = 1.8\,mR\,\text{fim}$

A. Incorrect - this is 200 mr/hr and is too high for a radiation area.

B. Correct- **CAUTION, HIGH RADIATION AREA**

C. Incorrect - an exclusion area is > 1 rem/hr

D. Incorrect- not high enough for this designation

Reference:CFR: 43.4 / 45.10 OPS-30401A, Health Physics

POSTINGS	DOSE RATE (mrem/hr)	DISTANCE FROM SOURCE
Radiation Area	≥ 5 but < 100	30 cm (12 inches)
High Radiation Area	≥ 100	30 cm
Exclusion Area	≥ 1000 or at HP Mgr's Direction	30 cm
Very High Radiation Area	≥ 500 rads/hr	1 meter

Types of Postings

Several different types of radiological conditions may exist in the plant. High radiation levels and contaminated areas are some examples. Before entering any type of radiological area, you must meet the requirements of the RWP. The following are common types of postings that may be encountered in the plant, and what they mean:

• Radiation Controlled Area - this is an area with restricted access to make individuals knowledgeable of possible exposure to radiation and radioactive material.

• Radiation Area - This is an area with a dose rate greater than 5 mrem per hour, 30 cm (appox.12") from the source of radiation. It is posted with a 4-sided rectangle shaped sign.

• High Radiation Area (See Figure 13) - This is an area with a dose rate of greater than 100 mrem per hour, 30 cm (appox.12") from the source. This is posted with a triangle shaped (3 sided) sign.

• Exclusion Area (See Figure 14) - This is a special type of High Radiation Area where you could receive greater than one rem/hr at 30 cm (appox. 12"). The access to this area is normally locked due to the high dose rate. (This area is posted with an 8-sided sign that is the same shape as a traffic control stop sign.)

Very High Radiation Area (See Figure 15) - This is an area which has the words "GRAVE DANGER, VERY HIGH RADIATION AREA". This area has the potential of being greater than 500 rad (usually same as rem) per hour at 1 meter.

Very High Radiation Areas will be controlled similar to "Exclusion Areas", with additional measures taken to ensure that an individual is not able to gain unauthorized or inadvertent access to the area. This is posted with an 8-sided sign (shaped like traffic control stop sign).

G2.3.2 Radiation Control - Knowledge of facility ALARA program.

List four types of areas posted based on radiation levels and the radiation levels/distances that require them to be posted (OPS30401A22).

Describe the posting and entry requirements for a High Radiation Area. (GEN40103E-01)

Describe the posting and entry requirements for an Exclusion Area. (GEN40103E-02)

Describe the posting and entry requirements for a Very High Radiation Area. (GEN40103E-03)

Identify the following radiological areas and postings: (GEN40103D-01)
- Radiation Controlled Area (RCA)
- Radiation Area
- High Radiation Area (HRA)
- Exclusion Area
- Very High Radiation Area (VHRA)
- Airborne Radioactivity Area
- Radioactive Materials Area
- Radiologically Restricted Area (RRA)

HEALTH PHY-30401A22 #19

Types of Postings

Several different types of radiological conditions may exist in the plant. High radiation levels and contaminated areas are some examples. Before entering any type of radiological area, you must meet the requirements of the RWP. The following are common types of postings that may be encountered in the plant, and what they mean:

- Radiation Controlled Area - this is an area with restricted access to make individuals knowledgeable of possible exposure to radiation and radioactive material.

- Radiation Area - This is an area with a dose rate greater than 5 mrem per hour, 30 cm (~12") from the source of radiation. It is posted with a 4-sided rectangle shaped sign.

- High Radiation Area (See Figure 13) - This is an area with a dose rate of greater than 100 mrem per hour, 30 cm (≈ 12") from the source. This is posted with a triangle shaped (3 sided) sign.

- Exclusion Area (See Figure 14) - This is a special type of High Radiation Area where you could receive greater than one rem/hr at 30 cm (≈ 12"). The access to this area is normally locked due to the high dose rate. (This area is posted with an 8-sided sign that is the same shape as a traffic control stop sign.)

- Very High Radiation Area (See Figure 15) - This is an area which has the words "GRAVE DANGER, VERY HIGH RADIATION AREA". This area has the potential of being greater than 500 rad (usually same as rem) per hour at 1 meter. Very High Radiation Areas will be controlled similar to "Exclusion Areas", with additional measures taken to ensure that an individual is not able to gain unauthorized or inadvertent access to the area. This is posted with an 8-sided sign (shaped like traffic control stop sign).

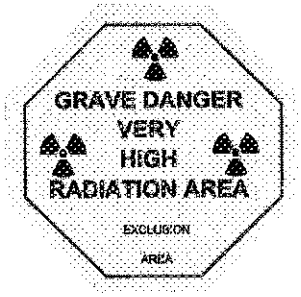

- Airborne Radioactivity Area - Occasionally, an area may contain radioactive material that has become airborne. This can be the result of steam leaks, maintenance activities, a wet contaminated area drying out, or other conditions. An airborne radioactivity area is an area that

Entry Requirements

Certain areas of the plant have postings that are different from standard posting due to FNP's attempt to ensure that you, the Radiation Worker, are kept fully informed of the conditions that could cause you to get unexpected or unplanned dose, exceed Administrative Guidelines, or even exceed NRC Limits. The signs for these areas were generally described in Lesson D of this module.

High Radiation Area (Figure 13)

- Area posted with a 3 sided (triangle shaped) sign similar to a traffic yield sign
- Requirements for entry:
  - Always, an RWP must be issued to control access to the area - this can be either a special or a routine RWP
  - Each person entering must have a knowledge of area dose rates. Dose rate information may be obtained from surveys, discussion with HP, from radiological postings, survey maps, etc. You may <u>not</u> do anything to increase the radiological hazards without permission from HP.
  - If the person entering does not have radiological job knowledge, an HP Technician must perform <u>intermittent</u> job coverage for the entry by surveying this area and checking on the work progress periodically. (The HP Technician can review work as necessary.)

Radiological Exclusion Area (Locked High Radiation Area) (Figure 14)

- Area is posted with an 8 sided (octagon shaped) sign similar to a traffic control stop sign
- Area is normally locked and keys to the area will be under the control of Health Physics supervision

NOTE: FOR RADIOLOGICAL EXCLUSION AREAS ACCESSIBLE TO PERSONNEL THAT ARE LOCATED WITHIN LARGE AREAS, SUCH AS FNP'S CONTAINMENT, WHERE NO ENCLOSURE EXISTS FOR PURPOSES OF LOCKING, AND NO ENCLOSURE CAN BE REASONABLY CONSTRUCTED AROUND THE AREAS, THEN THAT AREA SHALL BE ROPED OFF BY A THREE-ROPE BARRIER SPACED SUFFICIENTLY APART (e.g., 1 FOOT) TO MARK THE INDIVIDUAL AREA, AND A FLASHING LIGHT SHALL BE ACTIVATED AS A WARNING DEVICE.

In some cases, an HP Manager may drop the 3-rope barrier criteria; however, the area must be barricaded in a manner approved by HP.

- Requirements for entry:
  - A Special RWP (SRWP) must be issued to control access
  - An HP Manager must approve the entry
  - A pre-job briefing must be held to assign duties and discuss all requirements of the job, including ALARA requirements
  - An HP Technician must provide continuous job coverage and positive control of activities with the area. This job coverage may include use of closed circuit TV cameras, mirrors, or other methods to ensure dose is kept ALARA.

Very High Radiation Area (Figure 15)

- Area posted with an 8 sided sign similar to a traffic control stop sign
- Normal entry into this area is handled like an Exclusion Area due to the potential of high dose rates being greater than or equal to 500 rads/hr at 1 meter (1 rad ≈1 rem).
- Area locked or guarded to prevent unauthorized entry.
- Posting must have "GRAVE DANGER - VERY HIGH RADIATION AREA"

POSTINGS	DOSE RATE (mrem/hr)	DISTANCE FROM SOURCE
Radiation Area	$\geq$ 5 but < 100	30 cm (12 inches)
High Radiation Area	$\geq$ 100	30 cm
Exclusion Area	$\geq$ 1000 or at HP Mgr's Direction	30 cm
Very High Radiation Area	$\geq$ 500 rads/hr	1 meter

Areas posted as "Exclusive Areas" require a special RWP for the entry, a HP Technician to perform continuous coverage, and a pre-entry briefing. From the controls on this area it is easy to see that it requires a minimum of two persons for an entry into an exclusive area, one of which must be the HP Technician.

PLANNED SPECIAL EXPOSURES

Planned Special Exposures (PSE) do not fit neatly into the dose limit scheme. First of all, it must be a non-routine activity that has to be done by a specific person. The dose is counted as part of your normal occupational dose.

With a planned special exposure, you may receive up to 5 rem for PSEs. To be allowed to have a PSE takes approval from a Senior Vice President after going through multiple layers of management. For example, if it was August of the year and you had 3 rem occupational dose already for the year and you were approved for a 4 rem PSE dose, then you would have an annual exposure of 3 rem + 4 rem = 7 rem. Your PSE lifetime accumulative dose margin would be

25 rem - 4 rem = 21 rem.

HP MANUAL

The HP Manual (ENP-O-M001) is a document that describes how the radiological protection program at the plant will be applied and what limits must be adhered to. Your instructor will give you a brief overview of this manual and how it affects you.

66. G2.3.4 001/3/3/RAD EXPOSURE LIMITS/MEM 2.5/3.1/BANK/FA011005/RO/

A member of the search and rescue team has received 2 REM TEDE this year. He spent 15 minutes in an area with a general area radiation level of 40 R/hr gamma , while searching for missing persons known to be injured in a waste gas decay tank explosion. Self contained breathing apparatus (SCBA) units are being used by this person while search and rescue is being performed.

Which one of the following is the **MAXIMUM** additional whole body exposure that this individual may be required to recieve in accordance with EIP-14, Personnel Movement, Relocation, Re-entry and Site Evacuation, while searching for other victims?

A. 2 Rem

B. 5 Rem

C. 15 Rem

D. 25 Rem

A. Incorrect - This is the Admin limit for TEDE

B. Incorrect- This is the 10CFR20 limit for TEDE

C. Correct - **15 Rem**
25 Rem allowed; used 10 rem already during 15 minutes; therefore,
25 - (40/4) = 25 - 10 = 15 Rem remaining

D. Incorrect- This is the maximum limit w/o subtracting the 10 rem.

Reference: CFR: 43.4 / 45.10 EIP-14

7.12 Emergency situations may transcend the normal requirement of maintaining personnel exposures below 10CFR20 limits, as noted in step 7.10. Emergency exposures shall be minimized to every degree practicable. Farley Nuclear Plant personnel who have completed the onsite radiation protection training may be required to receive an exposure up to 25 rem TEDE for the activity and conditions described below. For these same personnel to receive in excess of 25 rem, they must voluntarily agree to receive an emergency dose in excess of 25 rem, but less than 100 rem. Persons volunteering to receive in excess of 25 rem must be made fully aware of the risks involved. Emergency exposure limits are as follows:

TEDE DOSE	ACTIVITY	CONDITION
10 REM	PROTECTING VALUABLE PROPERTY	LOWER DOSE NOT PRACTICAL
25 REM	LIFE SAVING OR PROTECTION OF LARGE POPULATIONS	LOWER DOSE NOT PRACTICAL
>25 - 100 REM	LIFE SAVING OR PROTECTION OF LARGE POPULATIONS	VOLUNTEERS ONLY THAT ARE FULLY AWARE OF THE RISKS INVOLVED
Limit the dose to the lens of the eyes to 3 times the listed value. Limit the dose to other organs, including skin and extremities to 10 times the listed values.		

NOTE: THERE IS CURRENTLY NO METHOD AVAILABLE TO ASSESS INTERNAL EXPOSURE ON A REAL TIME BASIS; THEREFORE, FARLEY NUCLEAR PLANT WILL UTILIZE AN ADMINISTRATIVE DEFAULT CORRECTION FACTOR OF TWO TO RELATE DEEP DOSE TO EXTERNAL EXPOSURE.

7.13 If an internal hazard is present, the limit for the re-entry should be reduced by a factor of two, unless a compensatory measure has been used to eliminate the internal hazard

G2.3.4 Radiation Control - Knowledge of radiation exposure limits and contamination control, including permissible levels in excess of those authorized.

Determine the actions to be taken by the re-entry personnel if dose rates during re-entry exceed the dose limits given. (OPS40105B9*). (EIP-14.0)

EPIP PERS-40501B09 #19

Tracking and authorization for relocations involving personnel in the TSC/Control Room/OSC will be performed by the OSC Manager. If the OSC Manager is unavailable, the relocation responsibilities may be performed by the Maintenance Manager or Control Room.

Personnel who have been relocated outside of an assembly area will report to their assembly area, should the plant emergency alarm resound--unless specifically authorized to remain on station by the ED.

Requirements for Re-entry - General Guidance

TLD badges of personnel who receive an emergency exposure in excess of the 10CFR20 limits will be pulled and read prior to receiving further non-emergency exposure.

Re-entry personnel shall not deviate from a planned route unless unanticipated conditions such as rescue, performing an operation which would minimize the emergency condition, etc., require such a deviation.

If emergency dose rates observed during re-entry exceed the limits established by the re-entry guideline or other adverse conditions are encountered, re-entry personnel shall return to a safe area and contact the OSC/TSC/Control Room for further instructions.

If the Plant Emergency Alarm (PEA) is sounded while a re-entry team is involved in their assigned tasks, the re-entry team shall call the Control Room/TSC/OSC and request further instructions for assembly requirements.

The re-entry guideline/log will serve as a tracking mechanism for re-entries. One copy of the guideline will remain with the OSC and, if desired, another copy will be given to the re-entry team leader. Individuals listed on the re-entry guideline as responsible for completion of guideline items are not required to personally initial the guideline, but are responsible for ensuring that each requirement is performed and initialed by the person performing or ensuring performance of the task.

Radiological monitoring will be established for each re-entry. The following parameters will be considered when determining the degree of radiological monitoring:

- Releases in progress
- Dose rates, airborne and contamination levels
- Stability of plant radiological conditions

Re-Entry is the responsibility of the Emergency Director, and requires verbal ED approval to execute a re-entry. Re-entries may be authorized and executed by the OSC Manager or Maintenance Manager, with ED approval. Approval to exceed 10CFR20 radiation exposure limits must be approved by the Emergency Director. Approval to exceed plant administrative dose limits must be approved by the HP Manager, or the Emergency Director in the HP Manager's absence.

Emergency situations may transcend the normal requirement of maintaining personnel exposures below 10CFR20 limits. Emergency exposures shall be minimized to every degree practicable. Farley Nuclear Plant personnel who have completed the onsite radiation protection training may be required to receive an exposure up to 25 rem TEDE for the emergency activity. For those same personnel to receive in excess of 25 rem, they must voluntarily agree to receive an emergency dose in excess of 25 rem, but less than 100 rem. Persons volunteering to receive in excess of 25 rem must be made fully aware of the risks involved.

Emergency Director. Approval to exceed plant administrative dose limits listed in step 7.10 must be approved by the HP Supervisor, or the Emergency Director in the HP Supervisor's absence.

7.9 An Emergency Repair Party which functions as a re-entry team shall consist of at least two (2) persons.

7.10 Farley Nuclear Plant personnel who have completed the onsite radiation protection training may be required to receive an exposure up to the following 10CFR20 limits:

	10CFR20 limit	Administrative limit
Whole body (TEDE)	- 5 rem	- 2 rem
Lens of the eyes	- 15 rem	- 6 rem
Skin of the whole body	- 50 rem	- 20 rem
Extremities	- 50 rem	- 20 rem
Internal organs	- 50 rem	- 20 rem

7.11 Dosimetry records for potential re-entry team members are available in the Dosimetry Lab.

CAUTION: EMERGENCY EXPOSURE LIMITS SHALL ONLY BE AUTHORIZED BY THE E.D.

7.12 Emergency situations may transcend the normal requirement of maintaining personnel exposures below 10CFR20 limits, as noted in step 7.10. Emergency exposures shall be minimized to every degree practicable. Farley Nuclear Plant personnel who have completed the onsite radiation protection training may be required to receive an exposure up to 25 rem TEDE for the activity and conditions described below. For those same personnel to receive in excess of 25 rem, they must voluntarily agree to receive an emergency dose in excess of 25 rem, but less than 100 rem. Persons volunteering to receive in excess of 25 rem must be made fully aware of the risks involved. Emergency exposure limits are as follows:

TEDE DOSE	ACTIVITY	CONDITION
10 REM	PROTECTING VALUABLE PROPERTY	LOWER DOSE NOT PRACTICAL
25 REM	LIFE SAVING OR PROTECTION OF LARGE POPULATIONS	LOWER DOSE NOT PRACTICAL
>25, <100 REM	LIFE SAVING OR PROTECTION OF LARGE POPULATIONS	VOLUNTEERS ONLY THAT ARE FULLY AWARE OF THE RISKS INVOLVED
Limit the dose to the lens of the eyes to 3 times the listed value. Limit the dose to other organs, including skin and extremities to 10 times the listed values.		

NOTE: THERE IS CURRENTLY NO METHOD AVAILABLE TO ASSESS INTERNAL EXPOSURE ON A REAL TIME BASIS; THEREFORE, FARLEY NUCLEAR PLANT WILL UTILIZE AN ADMINISTRATIVE DEFAULT CORRECTION FACTOR OF TWO TO RELATE DEEP DOSE TO EXTERNAL EXPOSURE.

7.13 If an internal hazard is present, the limit for the re-entry should be reduced by a factor of two, unless a compensatory measure has been used to eliminate the internal hazard.

8.0 Requirements for Re-entry - Specific Guidance

8.1 The Emergency Director must verbally approve all re-entries.

8.2 The ED must approve doses that exceed the 10CFR20 limits of step 7.10.

8.3 The HP Supervisor or ED will complete the applicable portions of section II of the re-entry Guideline.

8.4 The HP Supervisor or designee will complete section IV of the Re-Entry Guideline.

8.5 The OSC Manager or Maintenance Supervisor (or ED, if OSC and Maintenance Manager are not available) will coordinate the re-entry and complete sections I (OSC Manager Section) and V (Debrief Section) of the Re-Entry Guideline. Section III is a combined brief section to be completed by the OSC Manager or designee and the HP Supervisor or designee.

HEALTH PHYSICS SECTION II

CAUTION: Approved dose and dose rate limits should be per routine entry RWP-911 for drill events. For Drills, enter the simulated dose and dose rate values per scenario event expected conditions to exercise guidelines and emergency procedures. Simulated information would be N/A in an actual event. DO NOT USE FAST ENTRY DADS FOR DRILL PURPOSES.

___ A. HP — Specify dose and dose rate limits.

APPROVED DOSE:_____ Drill Simulated Dose_____

APPROVED DOSE RATE:_____ Drill Simulated Rate_____

_____B. HP SUP — Authorize dose limits less than 10CFR20 limits and greater than admin limits per paragraph 7.10.

_____C. ED — Authorize dose limits greater than 10CFR20 limits in paragraph 7.10.

_____D. HP — Have re-entry personnel complete appropriate sections of re-entry individual exposure record including signing the form if 10CFR20 limits will be exceeded and complete Re-Entry Individual Exposure Record.

_____E. HP — Verify that the approved dose will not cause the individual(s)to exceed FNP HP admin limits unless approved by HP Supervisor or 10CFR20 limits unless approved by the ED.

_____F. HP SUP — For doses in excess of 25 rem, the following two steps must be performed:

1. Verify that the individual to receive the dose is a volunteer.
2. Ensure that the individual to receive the dose has been briefed and is fully aware of the risks involved. (Use table 2 as guidance for the brief.)

_____G. HP SUP — Are Thyro Block (KI) tablets required? ☐ yes ☐ no (Ref FNP-0-EIP-4.0, Fig 3)

_____H. HP — Specify appropriate protective clothing, respirator usage and monitoring devices.

☐ STREET CLOTHES
☐ STD LABCOAT DRESSOUT
☐ STD CVRALL DRESSOUT
☐ CLOTH ☐ PAPER ☐ PLASTIC
☐ SCBA
☐ OTHER RESPIRATOR_____
☐ OTHER_____

☐ SINGLE W/B TLD
☐ MULTIBADGE
EXT TLD ☐ HANDS ☐ FEET
PICS ☐ 200MR ☐ 2R ☐ 5R
☐ DAD

_____

_____

67. G2.4.23 001/3/4/SOP-0.8/MEM 2.8/3.8/NEW/FA011005/RO/

Which one of the following provides the correct priority and reason for monitoring of Critical Safety Function Status Trees (CSFSTs)?

CSFSTs should be monitored.....

A. for information only if ECP-0.0, Loss of All AC, is in effect because none of the ESF equipment is available.

B. and implemented upon first entering EEP-0, Reactor Trip or Safety Injection, to protect the barriers and to prevent radiation release.

C. for information only if EEP-0 is in effect because CSFSTs assume two trains of ESF equipment will be available.

D. initially for information only and then implemented when ECP-0.0 is in effect and all attempts to restore emergency power have been unsuccessful, to protect the barriers and to prevent radiation release.

References: SOP-0.8 para. 4.0 and all subparagraphs

A. Correct, **for information only if ECP-0.0, Loss of All AC, is in effect because none of the ESF equipment is available.**

page 30 of OPS-52301B, emergency response procedures, says

Direct entry into ECP-0.0 due to loss of AC power on all AC emergency buses is expected to be a rare occurrence. However, once in ECP-0.0, special considerations come into effect. Because none of the electrically powered safeguards equipment used to restore CSFs is operable, none of the FRPs can be implemented. A NOTE at the beginning of Procedure ECP- 0.0 states that, "CSF status trees should be monitored for information only. FRPs should not be implemented." Once in ECP-0.0, the operator performs the required actions and is not allowed to transition to any other procedure until some form of power is restored to one AC emergency bus. Even then, permission is not granted to implement FRPs until some initial status checks and actions are performed by the operator.

B. Incorrect- the initial stage of EEP-0 ensures barrier protection

C. Incorrect- only one train is required

D. Incorrect- CSFs are not implemented until the operator performs the required actions and is not allowed to transition to any other procedure until some form of power is restored to one AC emergency bus. <u>Even then, permission is not granted to implement FRPs until some initial status checks and actions are performed by the operator.</u>

G2.4.23 - Emergency Procedures / Plan - Knowledge of the bases for prioritizing emergency procedure implementation during emergency operations.

List the basic categories of emergency transients as categorized by the Emergency Response Procedures (ERPs) (OPS52301B01).

List the critical safety functions in order of priority and describe how the critical safety functions protect the barriers to radiation release (OPS52301B03).

Identify when the critical safety function status trees (CSFSTs) must be monitored (OPS52301B08).

3.17 Use of Adverse Containment Values

Due to the affect of environmental conditions on instrumentation, the ERP's are written such that some operator decisions are based on conditions within containment. The following guidelines are used to determine the continued applicability of adverse values:

- If adverse values were entered due to containment pressure > 4 psig, then adverse values remain in effect until pressure is < 4 psig and the applicable instruments have been channel checked.
- If adverse values were entered due to containment radiation > 10^5 R/hr, then adverse values remain in effect until the integrated radiation dose is verified to be less than 10^6 Rad.

4.0 Critical Safety Function Status Trees (CSFSTs)

4.1 General

The ERP network is designed to protect the health and safety of the public by maintaining the fission product barriers intact. In the initial stage of ERP performance, if AC power is available, the user ensures that the automatic plant systems are functioning properly to protect these barriers. Afterwards, the CSFSTs are monitored to detect challenges to the barriers due to worsening plant conditions or equipment failure and to direct the user to an appropriate procedure.

4.2 Applicability

The user should begin monitoring the CSFSTs when directed by EEP-0 or upon transition from EEP-0. The CSFSTs are not monitored initially because the ERPs are already directing the initial action required to protect the barriers. If the user enters ECP-0.0, the CSFSTs should be monitored for information only. The Function Restoration Procedures assume that at least one train of safeguards busses is available. If all AC power has been lost, ECP-0.0 will provide the appropriate actions to protect the barriers.

Although some procedures are provided with a foldout page containing a CSF red path summary, the user must continue to monitor the CSFSTs when performing these procedures as well.

The Emergency Contingency Procedures (ECPs) provide guidance for plant recovery from low probability or unique event sequences, which are not easily covered in the main emergency event or event specific procedure. If guidance had been included for these low probability events, it would have unnecessarily complicated the applicable EEPs or ESPs and reduced their effectiveness. An example of such a low probability accident is the Loss of All AC Power Emergency Contingency Procedure (ECP-0.0). In the event that the AC emergency electrical buses are de-energized, EEP-0 directs the operator to transition to ECP-0.0 since none of the EEPs or ESPs provide adequate guidance without electrical power.

Table 1 is a complete listing of all FNP Emergency Response Procedures by number and title for use as a reference until you become more familiar with the ERPs.

Function Restoration Procedures

The Optimal Recovery Procedures were written to take into account all reasonably probable accidents that could occur at a nuclear power plant. Nonetheless, unique, unanalyzed accidents are possible. A fundamental goal of nuclear safety is to protect the health and safety of the public by prevention of uncontrollable releases of radioactive material from nuclear power plants. This goal is achieved, in part because procedures have been developed to prevent or minimize radiation releases in the event of an accident, no matter what type of accident has occurred (unique or analyzed). These procedures are called the Function Restoration Procedures (FRPs). The basic concept of the Function Restoration Procedures is that radiation release to the environment can be minimized if the barriers to radiation release are protected.

The barriers provided in every nuclear plant consist at least of the following:

- Fuel clad
- Reactor coolant system (RCS) pressure boundary
- Containment
- Distance

The Emergency Response Procedures are concerned with protecting the first three barriers, which are direct physical barriers to the movement of radioactive materials and together provide "defense in depth." Fuel cladding is designed to contain all fission products during all

normal operation and expected transients. The RCS blocks the transport of radionuclides that escape through the fuel rod barriers and those that are produced outside the fuel rods. Containment blocks the transport of radionuclides that escape through the RCS pressure boundary and those few radionuclides that form outside the RCS. In its most general form, containment includes the main containment building and the boundaries of those systems that penetrate the containment building. Finally, by locating the plant on a remote site, the threat to the general public in the event of a release is reduced by decay, dilution, and dispersion of radioactive material in the atmosphere. As a last resort, time is provided for the evacuation of the population in downwind areas. These last resort issues are considered in the Farley Emergency Plan and the Emergency Plan Implementing Procedures (EIPs).

As long as the fuel cladding, RCS pressure boundary, and containment barriers are intact in a nuclear power plant, the plant poses no threat to the health and safety of the general public. Should one of the barriers be broken, the threat to the general public increases. As barriers are lost, the threat becomes more significant, and external emergency actions may be required. Therefore, in terms of nuclear safety, the goal of nuclear power plant operation is to ensure that as many of the three physical barriers remain intact as possible at all times and under all conditions and/or circumstances.

For each barrier, there is a set of functions that must be maintained on a continuing basis if the barrier is to remain intact. A set of safety functions that is sufficient to maintain the fuel matrix/cladding, RCS pressure boundary, and containment barriers are:

- Maintenance of subcriticality
- Maintenance of core cooling
- Maintenance of a heat sink
- Maintenance of RCS integrity
- Maintenance of containment integrity
- Control of reactor coolant inventory

This safety function set is defined as the critical safety functions (CSFs). These CSFs are associated with the barriers as depicted schematically below and in Figure 2.

BARRIER	CRITICAL SAFETY FUNCTION
Fuel Cladding	Maintenance of SUBCRITICALITY (minimize energy production in the fuel)
	Maintenance of CORE COOLING (provide adequate reactor coolant for heat removal from the fuel)
	Maintenance of a HEAT SINK (provide adequate secondary coolant for heat removal from the fuel)
	Control of reactor coolant INVENTORY (maintain enough reactor coolant for effective heat removal and pressure control)
Reactor Coolant System Pressure Boundary	Maintenance of RCS INTEGRITY (prevent failure of RCS)
	Maintenance of a HEAT SINK (provide adequate heat removal from the RCS)
	Control of reactor coolant INVENTORY (prevent RCS solid conditions and loss of pressure control)
Containment Vessel	Maintenance of CONTAINMENT integrity (prevent failure of containment vessel)

Situations can arise in which the integrity of a barrier is lost and cannot be restored even though all CSFs are satisfied. The classic double-ended guillotine break of RCS piping constitutes an irrevocable failure of the RCS pressure boundary barrier. In this situation, the RCS pressure boundary barrier is recognized to be failed. All available sources are directed toward lessening the effect of the failed barrier and keeping the fuel matrix/cladding barrier and the containment barrier intact.

The FRPs are directed towards actions that the operator can take to restore the CSF as much as possible. Thus, the procedures, then, are organized around the safety functions:

WESTINGHOUSE	FARLEY	CATEGORY
FR-S.X	FRP-S.X	Subcriticality
FR-C.X	FRP-C.X	Core Cooling
FR-H.X	FRP-H.X	Heat Sink
FR-P.X	FRP-P.X	Integrity (of the RCS)
FR-Z.X	FRP-Z.X	Containment
FR-I.X	FRP-I.X	Inventory

The X in the numbers above indicates a particular restoration strategy, which depends on the type or severity of the challenge to the CSF. Graphic displays, called "Critical Safety Function Status Trees (CSFSTs)," direct the operator to the correct procedure. (See Table 1.) The key indications that might indicate a challenge to a CSF are labeled at each decision point. The trees are presented in the CSF Procedure, CSF-0. Tree status is continually presented on the safety parameter display system (SPDS) computer in the control room or can be monitored manually.

Coordinating Use of the Emergency Procedures

(Figures 3 and 4) The two basic types of procedures, Optimal Recovery and Function Restoration, are handled separately. As industry experience has shown, the Optimal Recovery Procedures will cover nearly every accident. An Optimal Recovery Procedure provides the most efficient way to respond to an accident. The Optimal Recovery Procedure is built around the event that probably caused the transient and has the greatest likelihood of bringing the plant to a controlled shutdown or return to power as quickly as possible. Because of this, the Optimal Recovery Procedures are the preferred way to handle the plant emergency. However, multiple events/multiple failures may result in plant conditions that make it impossible for the operator to use the event-based strategies. In these rare cases, the function-related strategies become the

preferred means of handling the plant. By design, the two types of procedures are not all that different. Of course, the Optimal Recovery strategy is going to be one that should succeed in maintaining the CSFs. Although Function Restoration Procedures directly address the actions necessary to regain control of one specific function, the end of procedures normally direct the operator back to an Optimal Recovery strategy. Each type of procedure, then, has its designed strengths and is used when these strengths are needed.

The transition between procedures is highly ordered and is guided by the procedures themselves. When the reactor trips, the operator normally begins with EEP-0. This procedure has the operator verify the correct response of the automatic protection and safeguards systems. EEP-0 also tells the operator specifically what indications to look at and, based on those findings, which Optimal Recovery Procedure to go to next. The operator continues along this directed path until plant operation is returned to a condition covered by one of the normal unit operating procedures or special technical directives. The Function Restoration Procedures will be entered if any of the CSFs are being challenged after the operating team is directed to start monitoring the CSFSTs or they have exited EEP-0. The SPDS monitors the CSFSTs and will alert personnel if a challenge is detected. One of the people in the control room will be directed to monitor and/or manually verify the CSF status. The Shift Supervisor would then evaluate the condition and direct the control room team to leave the Optimal Recovery Procedure and go to the Function Restoration Procedure indicated by the CSFSTs. Should more than one safety function be challenged, there is an established priority that must be followed. However, after entering the emergency procedures, the procedures provide guidance as to the most important thing to accomplish. Figures 3 and 4 illustrate the Optimal Recovery concept and the CSF restoration concept working together to direct the operator's action when the operation of the plant exceeds the bounds of the protective system limits.

Application of Plant Technical Specifications

Operating the plant in an emergency condition may cause the operator to violate plant Technical Specifications. Plant Technical Specifications contain the limiting conditions for normal plant operation in the applicable modes. By abiding by these conditions during normal

operation, the plant is operated in a safe manner, and the design safety features are ready to respond if a design basis accident occurs. Thus, Technical Specifications play a preventive and preparative role in ensuring plant safety. If an accident does occur, the Emergency Response Procedures play a responsive role in dealing with the accidents. The Emergency Response Procedures provide the actions to be performed and parameters to be monitored to maintain plant safety and to achieve optimal recovery.

When the safety systems actuate and perform their role during an accident, many of the preparative Technical Specifications will be violated because of the action of the safety systems. For example, after the refueling water storage tank (RWST) is injected into the RCS, its level will be below its Technical Specification limit. The accident itself could be a violation of the preventive Technical Specifications. For example, a loss of coolant accident (LOCA) will exceed RCS leak limits.

The Emergency Response Procedures were developed to respond to accident conditions and are supported by extensive analytical background, in most cases a best estimate. The actions provided in the procedures are those actions necessary to deal with the accident to maintain or restore the plant in a safe condition. In general, the Technical Specification limitations are considered in developing the emergency response actions in the procedures. However, the procedures contain actions that will lead to Technical Specification violations in order to maintain plant safety. For example, opening pressurizer power-operated relief valves (PORVs) during a complete loss of secondary heat sink will violate RCS leak limitations but is necessary to provide for core cooling and prevent more severe consequences.

Although it is desirable to remain within Technical Specification limits at all times, one must keep in mind that the overall objective is to protect the health and safety of the public. This may require procedurally violating a particular Technical Specification in response to an accident.

are organized into six categories consistent with the six CSFs. These categories appear on Table 1. Specific FRPs are discussed in detail in later ERP training material.

OPERATIONS

Control Room Usage of the ERP Network

While the previous sections discussed in general the separate usage of an individual procedure and evaluation of status trees, this section presents the intended overall usage of the entire ERP network. SOP-0.8, The Emergency Response Procedure User's Guide, also procedurally details guidance for proper use of the FNP ERPs.

Entry into the Emergency Response Procedure set is limited to two specific conditions:

- If, at any time, a reactor trip or safety injection occurs or is required, the operator will enter Procedure EEP-0, REACTOR TRIP OR SAFETY INJECTION.
- If, at any time, a complete loss of power on the AC emergency buses takes place, the operator will enter Procedure ECP-0.0, LOSS OF ALL AC POWER. This includes any time during the performance of any other ERP or FRP.

The entry into EEP-0 is expected to be the one more frequently used, so it is described first:

The operator enters at Step 1 and proceeds through EEP-0, following the rules of procedure usage as previously described for CSFST monitoring, with two possible outcomes:

- He remains in EEP-0 and is directed by an action step to begin monitoring the status trees, or
- He transfers to some other restoration procedure, at which point he begins to monitor the status trees.

Status tree monitoring takes place in accordance with its own rules of usage, in parallel with the recovery actions being performed by the operator. The monitoring may be done directly by the operating crew in the control room or by the Shift Technical Advisor. Monitoring will normally be performed utilizing SPDS or manually if SPDS is unavailable. The only requirement of the monitoring function is that the operator in charge of recovery actions be immediately informed of RED or ORANGE conditions and regularly advised of YELLOW and GREEN conditions.

The ERP actions in progress are suspended if either a RED or ORANGE condition is detected on a status tree. ERP actions are not to be performed while a CSF is being restored from a RED or ORANGE condition, unless required by the FRP in effect. In this situation, the ERP actions should be performed as if they were part of the RED or ORANGE condition FRP in effect. An example of such a required action is the transfer of SI pump suction from the RWST to the recirculation sump to maintain cooling flow to the core. In some cases, this requirement may not be explicitly stated, but is implied by the need for continued SI pump operation.

After restoration of any CSF from a RED or ORANGE condition, recovery actions may continue when the FRP is complete. Most often, the FRP will return the operator to the suspended ERP. However, at times, an FRP will require a transition to a different ERP because of conditions created within the FRP.

Upon continuation of recovery actions, some judgment is required by the operator to avoid inadvertent reinstatement of RED or ORANGE condition by undoing some critical step in a Function Restoration Procedure. The plant recovery procedures are optimal, assuming that equipment is available as required for safety. The appearance of a RED or ORANGE condition, in most cases, implies that some equipment or function required for safety is not available, and by implication, some adjustment may be required in the recovery procedures.

An example might be the establishing of an alternate feed path to the steam generators as required by FRP-H.1. With feed flow from either the main feed or condensate system, the operator would not want to isolate the main feed line if required in a subsequent procedure.

Direct entry into ECP-0.0 due to loss of AC power on all AC emergency buses is expected to be a rare occurrence. However, once in ECP-0.0, special considerations come into effect. Because none of the electrically powered safeguards equipment used to restore CSFs is operable, none of the FRPs can be implemented. A NOTE at the beginning of Procedure ECP-0.0 states that, "CSF status trees should be monitored for information only. FRPs should not be implemented." Once in ECP-0.0, the operator performs the required actions and is not allowed to transition to any other procedure until some form of power is restored to one AC emergency bus. Even then, permission is not granted to implement FRPs until some initial status checks and actions are performed by the operator.

Certain Emergency Contingency Procedures (ECPs) take precedence over FRPs because of their treatment of specific initiating events. In all such cases, this precedence is identified by a note at the beginning of the procedure.

For example, ECP-2.1 deals with depressurization, loss of level, and resultant feed flow reduction to all steam generators. While this condition results in a RED priority on the heat sink status tree, the referenced procedure, FRP-H.1, returns the operator to ECP-2.1 for the preferred treatment of the accident. A second example is ESP-1.3. This procedure transfers the SI system from the injection phase to the cold leg recirculation phase on low level in the RWST. The steps of procedure ESP-1.3 must be completed, even if challenges to a CSF occur at this time, since completion of these steps ensures core cooling. A note at the beginning of procedure ESP-1.3 states this action.

The more dramatic example is ECP-0.0, which was discussed above. This procedure provides the best strategy for maintaining CSFs satisfied and protecting barriers until AC emergency power is restored.

There is one unique procedure in the ERP set that has no entry symptoms or transitions. It is used purely as an operator aid and is entered based upon operator judgment. The procedure is ESP-0.0, REDIAGNOSIS. It is intended to be used after departure from EEP-0, but only if SI has been actuated or is required, and a RED or ORANGE path FRP is not in progress. It provides reassurance to the operator that he is in the correct ERP or provides the necessary transition instruction to get to the correct ERP for the existing symptoms. Anticipated operator need for this rediagnosis procedure is limited in the ERPs because many of the transitions needed to respond to new symptoms are included on the foldout pages. However, its presence can be reassuring to an operator after making several consecutive transitions due to rapidly changing conditions.

ERP usage always ends in one of the following ways with plant conditions stable:

- Transition to a plant operating procedure (not an ERP) as directed by the ERPs.
- Consult TSC staff for guidance about long-term recovery actions.

68. G2.4.31 001/3/4/ANNUNCIATORS/MEM 3.3/3.4/NEW/FA011005/RO/

Unit 1 is currently in EEP-1.0, Loss of Reactor or Secondary Coolant. Concerning annunciators as they come in to alarm, which one of the following describes the actions required associated with the alarm?

A. All annunciators need to be announced once in the ERGs, and responded to by a plant operator in an expeditious manner.

B. Annunciators should never be announced once in the ERGs, but they all should be responded to by a plant operator in an expeditious manner.

C. All annunciators that have a direct effect on the execution of the emergency procedure in effect should be announced and responded to immediately.

D. Annunciators that have a direct effect on the execution of the emergency procedure in effect should be announced and responded to when plant conditions and procedures allow time to do so.

A. Incorrect- All do not need to be announced.

B. Incorrect- Only those Annunciators that have a direct effect on the execution of the emergency procedure in effect should be announced and responded to when plant conditions and procedures allow time to do so.

C. Incorrect- All Annunciators do not have to be announced once in the ERGs, and they do not all have to be responded to immediately.

D. Correct- **Annunciators that have a direct effect on the execution of the emergency procedure in effect should be announced and responded to when plant conditions and procedures allow time to do so.**
See the procedure below.

Reference:
CFR: 41.10 / 45.3

Operations Policy :

Annunciator Response Policy

General - The purpose of this policy is to describe the expected response of control room operators to annunciators received in the control room and provide consistency among different crews. The intent of the policy is to ensure that appropriate members of the control room team are kept aware of plant conditions during routine operations while minimizing distractions during emergency conditions.

· **During ERG and AOP conditions, annunciators should not be announced unless the alarm has direct effect on the execution of the applicable ERG/AOP. Annunciators and associated ARPs should be responded to when plant conditions and ERG/AOP procedures allow time to do so. It may be appropriate to assign this task to an extra member of the team in order to expeditiously respond to alarms.**

G2.4.31 - Emergency Procedures / Plan - Knowledge of annunciators alarms and indications, and use of the response instructions.

Describe the process for communication of annunciators in the control room (OPS52303C01).

Annunciator Response Policy

General

- The purpose of this policy is to describe the expected response to annunciators and to provide consistency among different crews. The intent of the policy is to ensure that appropriate members of the control room team are kept aware of plant conditions during routine operations while minimizing distractions during system testing or emergency conditions.

- During ERG and AOP conditions, annunciators should not be announced unless the alarm has a direct affect on the execution of the applicable ERG/AOP. Annunciators and associated ARPs should be responded to when plant conditions and ERG/AOP procedures allow time to do so. It may be appropriate to assign this task to an extra member of the team in order to expeditiously respond to alarms.

- When alarms are received during a pre-shift or pre-job briefing, the briefing should be paused as required to allow for the annunciator announcement. For expected alarms, and unexpected alarms which do not require immediate response, the alarm may be left flashing until the briefing is complete. If immediate response is required, the pause should continue as required to allow for response to the condition.

Nuisance/Disabled/Locked In Alarms:

Definition – An annunciator which, due to failed equipment, deficient equipment, or input parameters fluctuating above and below the alarm setpoint, is in one of the following conditions:

- Alarming and clearing frequently
- Disabled or cutout
- Locked in solid

For nuisance/disabled/locked in alarms, the following guidelines apply:

- For alarms in the control room, the OATC/UO will announce that the alarm is a nuisance. This should be a three way, directed communication with another member of the crew, normally the Shift Supervisor.

- Once identified as a nuisance alarm, the applicable ARP does not have to be referenced.

- Nuisance alarms may be left flashing with Shift Supervisor concurrence.

- If the alarm is due to a deficient condition, the associated deficiency should be documented on a Condition Report.

- Prior to disabling an alarm, leaving it locked in solid or declaring it a nuisance, compensatory measures / system checks should be considered to ensure that additional malfunctions or degrading conditions are identified. This should take into account the relative safety significance of the alarm circuit which is out of service. For example, for a deficient input to HH4 (RCP Vibration Trouble), it would be appropriate to establish monitoring of the other RCP vibration probes at an increased frequency prior to declaring the alarm a nuisance or leaving it locked in solid. Any compensatory measures which are established should be documented as an Operations Administrative Tracking Item or LCO.

Expected Alarms:

Definition - Expected alarms include the following:

Any alarm resulting from surveillance testing, maintenance or other preplanned evolution.
Any alarm resulting from testing of local annunciator panels.

For expected alarms, the following guidelines apply:

- For alarms in the control room, the OATC/UO will announce that the alarm is expected and the reason for the alarm. This should be a three way, directed communication with another member of the crew, normally the Shift Supervisor.

  Example: "Jerry, that is an expected alarm due to I&C testing."
  "Understand expected alarm due to I&C testing."
  "That is correct."

- For an ongoing activity which causes an expected alarm to occur multiple times, it is only necessary to announce the alarm once, and it may be left flashing with shift supervisor concurrence.

- For expected alarms (control room or local) which are generated as part of a procedure sequence (i.e. STP, tagout, SOP, etc), the procedure and/or prejob brief should address appropriate compensatory measures and operator actions. The operator should verify proper system response to confirm that the alarms are due to the procedure in progress, however reference to the ARP is not required with the following exceptions (these ARP's have required actions regardless of the reason for the alarm):

  - BB1 - CTMT CLR DRN LVL HI
  - EH1 - SFP TEMP HI
  - FC4 - DIFF FLUX DEV ALERT
  - FF5 - COMP ALARM ROD SEQ/DEV OR PR FLUX TILT
  - JC5 - SG LVL CONT MEDIAN SIGNAL SELECTOR OFF NORMAL

- For annunciator tests, reference to an ARP is not required. System operators should notify the control room of upcoming annunciator tests when starting rounds. Additional notification should be made just prior to testing SGFP and LVSY Transformer alarms.

Unexpected Alarms:

Definition - Any annunciator not meeting the definition of an expected or nuisance alarm.

For unexpected alarms, the following guidelines apply:

- For alarms in the control room, the OATC/UO will announce the alarm using a three way, directed communication with another member of the crew, normally the Shift Supervisor.

  Example: "Jerry, that is the 1A RCP standpipe low level alarm."
  "Understand 1A RCP standpipe low level."
  "That is correct."

The ARP (control room or local) should be referenced to verify the correct automatic response and proper operator actions are taken unless the ARP has already been reviewed during the current shift. If the ARP has already been referenced during the current shift, then operator judgment will determine whether the

ARP should be used.

- All ARP's are considered CONTINUOUS USE and require the use of placekeeping aides.
- Consideration should be given to logging the alarm and/or the event causing the alarm, based on significance.

Operator Actions

Many ARPs have steps that require prompt operator action. However, unlike ERPs and AOPs, ARPs have no operator actions required to be performed from memory. In general, for most plant conditions and transients, operators have sufficient time to refer to the ARPs for guidance prior to taking actions. In other cases, implementation of the applicable Immediate Actions of ERPs or AOPS is the correct response to annunciated conditions.

In some infrequent situations timely operator performance of ARP guidance prior to referring to the procedure may be necessary to mitigate and terminate a plant transient or condition. In these cases the control room team will refer to the ARP as soon as possible to verify operator and plant response.

MCB Annuniator Window Colors

Annunciator windows on the MCB are color coded to help prioritize operator response. RED annunciators generally represent a first out alarm or conditions which could lead to a plant trip or transient. YELLOW annunciators generally represent conditions which must receive prompt attention to prevent equipment damage, radiation release or plant shutdown. WHITE annunciators generally represent conditions which do not require [illegible] operator response. This color scheme, along with operator training and experience, should be used to help in the prioritization of response to multiple alarms.

Back to Table of Contents

- Radio communication equipment used in normal plant operations also may be used in an emergency to communicate with mobile units.
- Since radio communication is a contributor to control room noise level, it should be used primarily when other communications systems are not available.

Annunciators

Annunciator alarms can be divided into three different categories: expected alarms, unexpected alarms, and nuisance alarms.

Expected alarms are any alarm resulting from the following:

- Testing of local annunciator panels when notified prior to testing.
- Operational, surveillance testing, or maintenance activities
- An operational activity or preplanned evolution
- Any alarm identified as a nuisance alarm

An unexpected alarm is any alarm that is not an expected or a nuisance alarm

A nuisance alarm is an alarm due to failed equipment, deficient equipment, or input parameters fluctuating above and below the alarm setpoint. Nuisance alarms alarm and clear frequently. Nuisance alarms and the associated deficiency should be documented on a Deficiency Report or Maintenance Support Request for failed or deficient equipment.

Annunciator Communication

All unexpected alarms should be communicated to the control room team and consideration should be given to logging the alarm, and/or the event causing the alarm, based on its significance.

Annunciator announcements should be done in a manner and frequency that do not add a distractive element to the control room environment, an annunciator which is unexpected and frequently alarming does not have to be announced to the team each time it alarms.

During ERG and AOP conditions, annunciators should not be announced unless the alarm has a direct effect on the execution of the applicable ERG/AOP.

Annunciator Response Procedure (ARP) Usage

Upon an unexpected alarm, the operator should ensure the action of the applicable ARP is performed. Upon an expected alarm, operator judgement should determine whether or not the ARP is referenced. ARPs should be referenced the first time an unexpected alarm occurs during the shift.

ARPs do not have to be referenced each and every time an annunciator alarms if the operator has previously reviewed the procedure earlier in the shift and their knowledge is sufficient to ensure appropriate actions are taken.

During ERG and AOP conditions, annunciators and associated ARPs should be responded to when plant conditions and ERG/AOP procedures allow time to do so. It may be appropriate to assign this task to an extra member of the team in order to expeditiously respond to alarms.

Unexpected alarms which occur frequently during a routine shift do not require the use of the ARP for each occurrence. Alarms such as FIRE, BOP PANELS ALARM, GFFD SYS TRBL, RMS HI-RAD, and the LIQ OR GAS PROC PNL ALARM would fall into this category.

ARPs for alarms associated with equipment startup or shutdown should be referenced to ensure conditions are normal even if the alarms are considered expected.

When a MCB Annunciator actuates for a LOCAL ANNUNCIATOR PANEL, the appropriate System Operator should be made aware of the annunciator. This communication may be made using the public address system to communicate the name and the alarm and to have the responsible position (person) call the Control Room, e.g., "John Doe you have an Liquid Waste Panel alarm, call the Control Room". It is necessary to have the responsible individual call the Control Room in order to ensure they heard your announcement.

ACP-2.0, MAIN CONTROL ROOM FORMALITY

Purpose

The purpose of ACP-2.0, Main Control Room Formality, is to ensure that Main Control Room activities, both routine and emergency, are conducted with a high degree of professionalism and in such a manner as to enhance plant operations

69. G2.4.39 001/3/4/EMERG PLAN/MEM 3.3/3.1/BANK/FA011005/RO/

During an emergency, a Reactor Operator has determined a need to make an emergency deviation from Technical Specifications to protect the public health and safety. Which one of the following is an acceptable way to accomplish this IAW AP-6.0, Procedure Adherence?

A. The RO must get approval from the Shift Manager prior to taking the action.

B. The RO must get approval from any licensed SRO prior to taking the action.

C. The RO may take the action and must notify the Nuclear Regulatory Commission within 15 minutes.

D. The RO may take the action and must notify the Shift Manager immediately after the action was taken.

Reference:
CFR: 45.11
OPS-52303E, AP-6 Procedure Allowance
4.2 Emergency deviations from Technical Specifications are authorized subject to the following conditions:
4.2.1 Action is needed immediately to protect the public health and safety.
4.2.2 No action consistent with Technical Specifications that can provide adequate or equivalent protection is immediately apparent.
4.2.3 The Shift Supervisor, Shift Manager, Operations Manager or Emergency Director approves the action.

A. Correct - **The RO must get approval from the Shift Manager prior to taking the action.**
This is one of 4 people that can approve of this action PRIOR to doing it.

B. Incorrect- There are only 4 classifications that can approve this action .

C. Incorrect - RO can NOT take the action first and NRC notification is not required by the RO.

D. Incorrect- RO can NOT take the action first.

G2.4.39 - Emergency Procedures / Plan - Knowledge of the RO's responsibilities in emergency plan implementation.

Explain management's expectations associated with authorizing procedural deviations (OPS52303E01).

PLT OPER-40502H07 #2

4.2 Emergency deviations from Technical Specifications are authorized subject to the following conditions:

4.2.1 Action is needed immediately to protect the public health and safety.

4.2.2 No action consistent with Technical Specifications that can provide adequate or equivalent protection is immediately apparent.

4.2.3 The Shift Supervisor, Shift Manager, Operations Manager or Emergency Director approves the action.

4.3 The following examples of circumstances, which warrant use of 10CFR50.54(x), are provided in the "Statements of Consideration" of 48FR13968 dated April 1, 1983.

4.3.1 Unanticipated situations requiring responses different from any considered during the course of licensing (e.g., the need to isolate accumulators to prevent nitrogen injection into the RCS while substantial pressure remained in the RCS during the TMI-2 accident since isolation was not permitted by the technical specifications).

4.3.2 Special circumstances involving multiple equipment failures or coincident accidents where plant emergency procedures could be in conflict or not applicable to the circumstances.

4.3.3 Accidents which take a different course from that visualized when emergency procedures were written and which require protective responses which are at variance with procedures which are required to be followed by the Licensee.

4.3.4 Relief from the performance of routine surveillance testing which falls due during an emergency, which diverts the attention of the operating crew from the emergency, or which would cause the loss of equipment needed for proper protective action.

4.4 At the termination of the emergency as described in 4.1, 4.2 and 4.3 a Condition Report, per NMP-GM-002, CORRECTIVE ACTION PROGRAM, shall be prepared and reviewed by the appropriate group supervision. The condition report will document the emergency changes made to the applicable procedure. If appropriate, the emergency changes will be incorporated in the next revision of the affected procedure.

mitigate a transient. In such emergency cases where existing procedural guidance does not specifically apply the existing guidance should be utilized as much as practical.

In cases where no procedure guidance exists, the planned action should be at the direction of and with the approval of the Shift Supervisor of the affected unit if time allows. Under no circumstances will plant personnel perform activities which they are not qualified to perform. If not notified prior to taking actions, the Shift Supervisor should be notified as soon as practicable after the emergency condition.

Deviations from procedures are not necessarily a departure from a license condition. The need to terminate the startup portion of a procedure and jump to the shutdown portion because of an unexpected transient or plant response may be a procedure deviation but not a departure from a license condition. Deviations that don't involve the use of 10CFR50.54(x) don't require approval or authorization before hand.

10CFR50.54(x) Deviations – From Technical Specifications

Emergency deviations from Technical Specifications are permitted per 10CFR50.54(x) subject to the following conditions:

- Action is needed immediately to protect the public health and safety.
- No action consistent with Technical Specifications that can provide adequate or equivalent protection is immediately apparent.
- The Shift Supervisor, Operations Shift Superintendent, Operations Manager or Emergency Director approves the action. This is consistent with the requirements of 10CFR50.54(y).

10CFR50.54(x) Deviations – From a License Condition

Emergency deviations from a license condition are also permitted per 10CFR50.54(x) subject to the same criteria described above for technical specification deviations. These deviations would primarily be warranted when plant conditions have degraded to the point where operation is required outside of plant design. Appendix 1 of AOP-49, *Imminent Security Threat*, is a good example. In this appendix, plant operation, although guided by the appendix, is outside of any anticipated design. It specifies contingency actions and alignments that are outside of plant

70 W/E02EA2.1 001/1/2/ESP-1.1/C/A 3.3/4.2/NEW/FA011005/RO/

Unit 1 had a spurious safety injection. ESP-1.1, SI Termination, has been entered and the following conditions exist:

- SI flow has been secured and normal charging established.
- Both RHR pumps have been secured.
- All RCPs are running.
- Pressurizer level is 50% and trending down slowly.

At the step to check SG water levels, the UO reports that the 1C SG is reading 65% and trending up rapidly with no AFW flow supplied. The OATC reports that Pressurizer level and subcooling are trending down rapidly. At this point, the team should:

A. Manually SI, then go back to EEP-0, Reactor Trip and Safety Injection.

B. Verify SI flow established per the foldout page, then go to EEP-3, Steam Generator Tube Rupture.

C. Realign HHSI flow and start additional charging pumps per the foldout page, then go to ESP-1.2, Post LOCA Cooldown and Depressurization.

D. Transiton to EEP-3, Steam Generator Tube Rupture, then realign HHSI flow and start additional charging pumps, and then go to ECP-3.1, SGTR with a loss of Reactor Coolant Subcooled Recovery Desired per the foldout page.

A. Incorrect- This is not correct since the SI has not been reset and foldout page requirements will take care of this situation. Also the transition to EEP-0 is incorrect.

B. Correct- **Verify SI flow established per the foldout page, then go to EEP-3, Steam Generator Tube Rupture.**
The foldout page has the team use attachment 3 to re-establish SI flow and then transition to EEP-3. The team could wait for the SCMM to reach 16°F or Pzr level to get to 7%, but the intent of the step is to go when the plant parameters are degrading and approaching the values and the team can not control the parameters. Since a SGTR is in progress, the team should be aware of the correct procedure to deal with that event. This is a recent change to procedures issued 10-28-2004.

C. Incorrect- Going to ESP-1.2 would not solve the problem and the only transition in the procedure to go to ESP-1.2 is at step 6 & 9 which is well before the step in the procedure to check SGWL at step 20. This is not a CAS due to the fact that many other EEP-1 transitions exist for the same purpose after this.

D. Incorrect- Going to EEP-3.0 is procedurally incorrect without an SI in Progress. Our background documents ensure that SI flow is initiated prior to E-3 transition and the FO page requirement to go to ECP-3.1 is to be used only after step 21 when the cooldown and depressurization has been complete and the SI has then been reduced. OE from FNP.

W/E02EA2.1 SI Termination - Ability to determine and interpret the following as they apply to the (SI Termination): Facility conditions and selection of appropriate procedures during abnormal and emergency operations.

Evaluate plant conditions and determine if transition to another section of ESP-1.1 or to another procedure is required. (OPS52531E08)

Step	Action/Expected Response	Response NOT Obtained
1	**Monitor SI reinitiation criteria.**	
1.1	Greater than 16°F(45°F) subcooled in CETC mode and PRZR level above 7%(50%).	1.1 Establish HHSI flow, and start additional CHG PUMPs as required using ATTACHMENT 3, RE-ESTABLISHING HHSI FLOW.
2	**Monitor CSF red path criteria.**	
2.1	Nuclear power less than 5%.	2.1 Go to FNP-1-FRP-S.1.
2.2	Core exit TCs less than 1200°F.	2.2 Go to FNP-1-FRP-C.1.
2.3	Total AFW flow greater than 395 gpm or at least one SG narrow range level greater than 31%(48%).	2.3 Go to FNP-1-FRP-H.1.
2.4	RCS cold leg temperature greater than 250°F or cooldown rate less than 100°F in last 60 minutes.	2.4 Go to FNP-1-FRP-P.1.
2.5	CTMT pressure less than 54 psig.	2.5 Go to FNP-1-FRP-Z.1.
3	**Monitor FNP-1-EEP-2 and FNP-1-EEP-3 branch criteria.**	
3.1	No SG pressure falling in an uncontrolled manner or less than 50 psig.	3.1 IF affected SG NOT previously isolated, THEN go to FNP-1-EEP-2.
3.2	No high secondary radiation or SG level rising uncontrolled.	3.2 Reinitiate SI THEN go to FNP-1-EEP-3, STEAM GENERATOR TUBE RUPTURE
4	**Monitor switchover criterion.**	
4.1	CST level greater than 5.3 ft.	4.1 Align AFW pumps suction to SW using FNP-1-SOP-22.0.
4.2	RWST level greater than 12.5 ft.	4.2 Go to FNP-1-ESP-1.3, TRANSFER TO COLD LEG RECIRCULATION.
5	**Monitor charging miniflow criteria (during SI).**	
5.1	RCS pressure less than 1900 psig.	5.1 Verify miniflow valves open.
5.2	RCS pressure greater than 1300 psig.	5.2 Verify miniflow valves closed.
6	**Monitor adverse containment criteria.**	
6.1	CTMT pressure less than 4 psig and radiation less than 10^5 R/hr.	6.1 Utilize bracketed adverse CTMT condition numbers.

Step	Action/Expected Response	Response NOT Obtained
1	**Monitor SI reinitiation criteria following SI termination (Step 21).**	
1.1	Greater than 16°F(45°F) subcooled in CETC mode and PRZR level above 7%(50%).	1.1 Establish HHSI flow, and start additional CHG PUMPs as required using ATTACHMENT 2, RE-ESTABLISHING HHSI FLOW and go to FNP-1-ECP-3.1.
2	**Monitor CSF red path criteria.**	
2.1	Nuclear power less than 5%.	2.1 Go to FNP-1-FRP-S.1.
2.2	Core exit T/Cs less than 1200°F.	2.2 Go to FNP-1-FRP-C.1.
2.3	Total AFW flow greater than 395 gpm or at least one SG narrow range level greater than 31%(48%).	2.3 Go to FNP-1-FRP-H.1.
2.4	RCS cold leg temperature greater than 250°F or cooldown rate less than 100°F in last 60 minutes.	2.4 Go to FNP-1-FRP-P.1.
2.5	CTMT pressure less than 54 psig.	2.5 Go to FNP-1-FRP-Z.1.
3	**Monitor FNP-1-EEP-2 and FNP-1-EEP-3 branching criteria.**	
3.1	No SG pressure falling in an uncontrolled manner or less than 50 psig.	3.1 If affected SG NOT previously isolated, THEN go to FNP-1-EEP-2.
3.2	No high secondary radiation or SG level rising uncontrolled.	3.2 If affected SG NOT previously isolated, THEN return to step 1.
4	**Monitor switchover criteria.**	
4.1	RWST level greater than 12.5 ft.	4.1 Go to FNP-1-ESP-1.3.
4.2	CST level greater than 5.3 ft.	4.2 Align AFW pumps suction to SW using FNP-1-SOP-22.0.
5	**Monitor charging miniflow criteria (during SI).**	
5.1	RCS pressure less than 1900 psig.	5.1 Verify miniflow valves open.
5.2	RCS pressure greater than 1300 psig.	5.2 Verify miniflow valves closed.
6	**Monitor adverse containment criteria.**	
6.1	CTMT pressure less than 4 psig and radiation less than 10^5 R/hr.	6.1 Utilize bracketed adverse CTMT condition numbers.

FIGURE 1

PROCEDURE REQUEST FORM (PRF)

(1) FNP-2-ESP-1.1 — Procedure Number
18.0 — Current Revision / Version

Procedure Title: SI TERMINATION

☐ New ☒ Revision # 19.0 ☐ Deletion
☒ Safety Related ☐ Non-Safety Related
☐ Infrequently Performed Test or Evolution

(2) **Description of Change(s) and Page Number(s) Affected:**
Foldout Page - Added "reinitiate SI THEN" to step 3.2 RNO.

Reason for change:
E-3 Transition Criteria for the foldout page in the background document "Executive Volume, Foldout Page" requires SI pumps running with flowpath aligned. CR 2004102083, AI 2004204125

Procedure change exempt from Applicability Determination ☐ Yes ☒ No
Basis for exemption: N/A

(3) **Prepared by:** _____ Signature _____ Date

(4)

10 CFR 50.59 Applicable (Attach Applicability Determination checklist)	☒ Yes	☐ No
10 CFR 50.59, 50.54(q), 50.54(p), or other applicable Review Form attached:	☒ Yes	☐ No
Environmental Evaluation Determination was Required (if yes, attach Figure 4):	☐ Yes	☒ No
Commitment Update Required (if yes, attach FNP-0-AP-98 Figure A1):	☐ Yes	☒ No
PRB review required (AP-2 or 50.59 Evaluation):	☐ Yes	☒ No
Licensing Document Change Request Required (if yes, complete AP-98):	☐ Yes	☒ No
Cross - Discipline Review Required (OR 1-99-409):	☐ Yes	☒ No

Reviewed by: _____ Signature _____ Date

(5) **Cross-Disciplinary Review:**

Group	Signature	Title	Date
PRB Review:			

(6) **Final Approval**

	Signature	Date
☐ Group Supervisor		
☒ Manager		
☐		
☐ Nuclear Plant General Manager		

	Figure 1 Applicability Determination Checklist	AD Revision No. ____ Sheet 1 of 3
Activity/Document No.: **FNP-2-ESP-1.1**	Activity/Document Revision No.: **19.0**	Unit No.: [ ]One [X]Two [ ]Shared
Title: **SI TERMINATION**		

Section I – Activity Summary

Prepared by: _____ / _____ Date _____
Print Signature

Reviewed by: _____ / _____ Date _____
Print Signature

Impacted Documents (If applicable): _____

Change: See attached AP-1, Figure 1.

Justification: See attached AP-1, Figure 1.

Section II – Applicable Regulation Determination

1. ☐ Yes ☒ No **Does the activity require a change to the (identify which):**
   - ☐ **Operating License,**
   - ☐ **Technical Specifications**
   - ☐ **Environmental Protection Plan?**

   If the answer to question (1) is yes, perform a 10 CFR 50.92 evaluation.

2. ☐ Yes ☒ No **Does the activity require a change to the Quality Assurance Program?**

   If the answer to question (2) is yes, perform a 10 CFR 50.54(a) evaluation.

3. ☐ Yes ☒ No **Does the activity require a change to the Security Plan, Contingency Plan, or the Security Training and Qualification Plan?**

   If the answer to question (3) is yes, perform a 10 CFR 50.54(p) evaluation.

4. ☐ Yes ☒ No **Does the activity require a change to the Emergency Plan?**

   If the answer to question (4) is yes, perform a 10 CFR 50.54(q) evaluation.

5. ☐ Yes ☒ No **Does the activity require a change to the Inservice Inspection Program or to the Inservice Testing Program, including relief requests?**

   If the answer to question (5) is yes, refer this activity to SNC-Inspection and Testing Services (ITS) for evaluation in accordance with 10 CFR 50.55a.

6. ☐ Yes ☒ No **Does the activity require a change to the Fire Protection Program and/or implementing procedures?**

   If the answer to question (6) is yes, perform a fire protection evaluation in accordance with the applicable Operating License condition.

	Figure 1 Applicability Determination Checklist	AD Revision No. ____ Sheet 2 of 3
Activity/Document No.: **FNP-2-ESP-1.1**	Activity/Document Revision No.: **19.0**	Unit No.: [ ]One [X]Two [ ]Shared
Title: **SI TERMINATION**		

7. ☐ Yes ☒ No **Does the activity require a managerial or administrative procedure change?**

If the answer to question (7) is yes, the change is subject to the controls of 10 CFR 50, Appendix B. Process the change in accordance with FNP-0-AP-1 and/or FNP-0-AP-98, and/or GO-NG-1. A 10CFR50.59 screen is not required.

8. ☐ Yes ☒ No **Does the activity require a change to the Updated FSAR (including documents incorporated by reference) that is excluded from the requirements to perform a 10 CFR 50.59 review in accordance with NEI 96-07, Revision 1 or NEI 98-03, Revision 1 such as (identify which):**

- ☐ **Editorial Changes,**
- ☐ **Clarifications to improve reader understanding,**
- ☐ **Correction of inconsistencies within the Updated FSAR which are clearly discernible (e.g., between sections),**
- ☐ **Designation of information as historical,**
- ☐ **Minor corrections to drawings (e.g., correcting mislabeled valves), or**
- ☐ **Similar changes that do not change the meaning or substance of information presented (e.g., reformatting or removing detail).**
- ☐ **Incorporation of information submitted to and approved by the NRC as a result of a license amendment.**

If the answer to question (8) is yes, a 10CFR 50.59 screen is not required for this aspect of the activity. If no UFSAR change is involved at all, this question is not applicable. Refer to Attachment 6.

9. ☐ Yes ☒ No **Does the activity involve (identify which):**

- ☐ **A temporary plant alteration to support maintenance (e.g., jumpering terminals, lifting leads, lead shielding, HVAC, scaffolding, and blocking doors) which:**
  - **will be restored to the as-designed condition prior to startup if shutdown, or**
  - **will be restored to the as-designed condition within 90 days if at power (Modes 1 and 2)?**
- ☐ **A temporary plant alteration that supports the installation and post-modification testing of an approved plant change which:**
  - **will be restored to the as-designed condition prior to startup if shutdown, or**
  - **will be restored to the as-designed condition within 90 days if at power (Modes 1 and 2)?**

If the answer to question (9) is yes, perform an assessment of the risk associated with this temporary plant alteration and manage in accordance with 10 CFR 50.65(a)(4) per FNP-0-ACP-52.2.

10. ☐ Yes ☒ No **Does the activity involve a change to a regulatory commitment not covered by another regulation based change process?**

If the answer to question (10) is yes, perform an evaluation consistent with NEI 99-04. Refer to AP-98 Appendix 1.

	Figure 1 Applicability Determination Checklist	AD Revision No. ____ Sheet 3 of 3
Activity/Document No.: **FNP-2-ESP-1.1**	Activity/Document Revision No.: 19.0	Unit No.: [ ]One [X]Two [ ]Shared
Title: **SI TERMINATION**		

11. ☐ Yes ☒ No **Does the activity involve a change, test, or experiment associated with the Independent Spent Fuel Storage Installation (ISFSI) or spent fuel cask design?**

If the answer to question (11) is yes, perform a 10 CFR 72.48 screen.

12. ☐ Yes ☒ No **Does the activity impact other plant specific programs which are different from those already identified above and are excluded from the scope of 10 CFR 50.59, and are controlled by (identify which):**

☐ **Another regulation (e.g., 10 CFRs 20, 26, 50.12, and 50.46),**

(If marked identify):_____

☐ **Operating License condition (e.g., maximum power level), or**

☐ **Technical Specifications or Environmental Protection Plan (e.g., the ODCM)?**

If the answer to question (12) is yes, perform an evaluation in accordance with the applicable requirement. Refer to Attachment 8.

13. Does the activity constitute a matter which could result in adverse environmental impact (either direct or indirect)? Check (a) or (b)

a. ☒ **No** **The nature of this change is such that it will not produce conditions which could result in significant adverse environmental impact.**

b. ☐ Possibly (Explain briefly):_____

If question (13.b) is checked, refer this activity to SNC Environmental Services for preparation of an Environmental Evaluation. Refer to Attachment 9.

14. ☒ Yes ☐ No **Are there any aspects of the activity not controlled by the processes described in items 1-13 above?**

If the answer to question (14) is yes, perform a 10 CFR 50.59 screen. Question (14) must be answered yes if items 1-13 are all answered no. Question (14) must also be answered yes for all Design Change Packages (DCPs), Minor Departures, and Minor Design Changes.

Section III – NRC Approval / LDCR Determination

15. ☐ Yes ☒ No **Is NRC approval required prior to implementation of this activity?**

If the answer to question (15) is yes, forward the activity to SNC corporate licensing for preparation of a submittal to NRC.

16. ☐ Yes ☒ No **Does this activity require a change to a licensing document(s)?**

If the answer to question (16) is yes, process the change in accordance with FNP-0-AP-98.

If an LDCR is required, enter the LDCR number when available. LDCR Number:_____

FIGURE 1

	10 CFR 50.59 SCREENING/EVALUATION	Sheet 1 of ___
Activity/Document No.: **FNP-2-ESP-1.1**	Revision No.: **19.0**	Unit No.: [ ]One [X]Two [ ]Shared
Title: **SI TERMINATION**		

A. Activity Summary

Preparer: _____ Date: _____
Signature/Name

Reviewer: _____ Date: _____
Signature/Name

FNP Approval: _____ Date: _____
Signature/Name

PRB Review: _____ Date: _____
Signature/Name

SRB Review: _____ Date: _____
Signature/Name

Description: FNP-2-ESP-1.1 Foldout Page Step 3.2 RNO enhanced to reinitiate SI prior to transitioning to EEP-3.0. E-3 Transition Criteria for the foldout page in the background document "Executive Volume, Foldout Page" requires SI pumps running with flowpath aligned. CR 2004102083, AI 2004204125

References: Westinghouse Owners Group ERGS Executive Volume

B. 10 CFR 50.59 Screening

Does the activity to which this evaluation applies represent:

1. ☐ Yes ☒ No A modification, addition to, or removal of a structure, system, or component (SSC) such that a design function as described in the Updated FSAR is adversely affected?

   Basis for Answer: This activity is a procedure change that does not affect any SSC or design functions.

2. ☐ Yes ☒ No A change to the procedures that adversely affects the performance or method of control of a design function as described in the FSAR?

   Basis for Answer: This procedure change does not affect any design functions. The purpose is to ensure SI flow is in progress to meet the assumptions of the associated transition to EEP-3.0.

FIGURE 1

	10 CFR 50.59 SCREENING/EVALUATION	Sheet 2 of ___
Activity/Document No.: **FNP-2-ESP-1.1**	Revision No.: **19.0**	Unit No.: [ ]One [X]Two [ ]Shared
Title: **SI TERMINATION**		

3. ☐ Yes ☒ No An adverse change to a method of evaluation or use of an alternate method of evaluation from that described in the Updated FSAR that is used in establishing design bases or in the safety analysis?

Basis for Answer: This activity is a procedure change that does not affect methods of evaluation as described in the FSAR. The purpose is to ensure SI flow is in progress to meet the assumptions of EEP-3.0.

4. ☐ Yes ☒ No A test or experiment not described in the Updated FSAR which is outside the reference bounds of the design basis as described in the Updated FSAR or is inconsistent with the analyses or descriptions described in the updated FSAR?

Basis for Answer: This procedure change does not introduce a test or experiment outside the bounds of design basis.

5. ☐ Yes ☒ No A change to the Technical Specifications and/or Environmental Protection Plan incorporated in the operating license?

Basis for Answer: This procedure change does not result in a change to Tech Specs or EPP.

IF the answer to any of questions 1, 2, or 4 in section B is "YES", then only complete the answers to questions 1-7 in section C. IF only the answer to question 3 in section B is "YES", then only complete the answer to question 8 in section C. IF question 5 is answered "YES", a license amendment is involved which requires NRC approval. Do not complete section C if all aspects of the activity will be addressed in the license amendment request.

71. W/E04EK3.2 001/1/1/ECP-1.2/MEM 3.4/3.9/BANK/FA011005/RO/

A small break LOCA has occurred outside containment.

Actions of ECP-1.2, LOCA Outside Containment, have been completed and RCS pressure continues to decrease. A transition is made to ECP-1.1, Loss of Emergency Coolant Recirculation.

Which one of the following describes the reason a transition is made to ECP-1.1?

A. To terminate the offsite release.

B. To recover after the break was isolated.

C. To take compensatory actions for lack of inventory in the containment sump.

D. To verify that all automatic actions have been completed to isolate containment.

A. Incorrect- ECP-1.1 will not terminate any release. It takes care of equipment without any suction and fills the RWST.

B. Incorrect - This would be correct for EEP-1.0 transition.

C. Correct- **To take compensatory actions for lack of inventory in the containment sump.**
The only two exits from ECP-1.2 are a transition to EEP-1 when the leak is isolated to recover the plant or to ECP-1.1 to recover inventory. Prior to transition out of the ECP-1.2, HP is notified to take surveys in the AB and personnel are sent to inspect the AB looking for the leak. This actually delays going to the ECP-1.1 procedure.

ECP-1.2, LOCA OUTSIDE CONTAINMENT, has been developed to attempt to isolate a LOCA outside containment. This procedure is entered from EEP-0 or EEP-1 based on indication of abnormal auxiliary building radiation or an ISLOCA outside containment . There are two transitions from this procedure. First, if the break is isolated based upon increasing RCS pressure, the operator is transferred to EEP-1, LOSS OF REACTOR OR SECONDARY COOLANT. Second, if the break cannot be isolated, the operator is sent to ECP-1.1, LOSS OF EMERGENCY COOLANT RECIRCULATION, since there will not be any fluid inventory in the containment sump to provide recirculation capability.

D. Incorrect- ECP-1.1 does not check that Phase A or Phase B isolations have been completed.

W/E04EK3.2 LOCA outside containment - Knowledge of the reasons for the following responses as they apply to the LOCA outside containment:
Normal, Abnormal and emergency operating procedures associated with (LOCA outside containment)

Analyze plant indications to determine the successful completion of any step in ECP-1.2 (OPS52532E07).

Evaluate plant conditions to determine if entry into ECP-1.2 is required (OPS52532E02).

ECP-1.2-52532E03 #1
Source: Byron 2000-301
2001 nrc exam

ECP-1.2, LOCA OUTSIDE CONTAINMENT

INTRODUCTION

ECP-1.2, LOCA OUTSIDE CONTAINMENT, provides procedural guidance for a LOCA that occurs outside containment. Specifically, the objective of this procedure is to provide actions to identify and isolate a LOCA outside containment.

An interfacing system loss of coolant accident (ISLOCA) is a loss of primary system coolant through interfacing system piping. An interfacing system is any fluid system that has the potential to be exposed to primary coolant system pressure through the misalignment or failure of valves or other components. Examples of interfacing systems are listed below:

- Safety injection (SI) system (low-head safety injection [LHSI], accumulators, high-head safety injection [HHSI])
- Chemical and volume control system (CVCS)
- Component cooling water (CCW) to reactor coolant pumps (RCPs)
- Sampling system

ISLOCAs can be divided into two categories according to the location of primary system coolant loss relative to containment. If the primary system coolant remains within containment during an ISLOCA, the accident is termed an ISLOCA inside containment. If the primary system coolant escapes the containment during an ISLOCA, the accident is termed an ISLOCA outside containment.

In general, the potential consequences of an ISLOCA outside containment are more severe than those of an ISLOCA inside containment. The limiting factor in an ISLOCA inside containment is the loss of the function performed by the breached interfacing system.

The limiting factors in an ISLOCA outside containment are the loss of the function performed by the breached interfacing system, the failure of containment isolation, and the loss of emergency core coolant inventory for long-term core cooling. If an ISLOCA outside containment cannot be isolated before a significant fraction of the reactor coolant inventory escapes the reactor coolant system (RCS) pressure boundary, a significant release of fission products to the environment may result.

GENERAL DESCRIPTION

Method of Evaluation

ISLOCA initiating event frequency (IEF) is evaluated in two steps: (1) identification of potential ISLOCA flow paths and (2) calculation of the frequency of an ISLOCA outside containment through these flow paths.

Identification of Potential ISLOCA Flow Paths

This step begins with the identification of all systems that interface with the RCS and may be subjected to normal RCS operating pressure.

Plant piping and instrumentation drawings are examined to identify all significant flow paths between each RCS/system interface identified above, which could expose low pressure piping outside of containment to high RCS pressure. For the purposes of this analysis, low pressure piping is any piping which would be expected to be incapable of withstanding normal RCS operating pressure. Flow paths through pipes with an inside diameter less than or equal to 3/8 inches are sufficiently small that the maximum RCS flow rate through these pipes is less than the capacity of the normal charging system. Any ISLOCA through pipes this small would not be expected to directly generate a reactor trip or SI signal, and primary system leakage would be handled safely through the operational leakage detection system.

Significant ISLOCA flow paths are examined to identify instrumentation and valves which may be useful in diagnosing and isolating an ISLOCA. The normal alignment, accident alignment, setpoint or actuator signal, and surveillance frequency of all such valves is identified for use in the quantification step.

Identification of Significant ISLOCA Flow Paths

The FNP P&IDs were examined to identify all significant flow paths from the RCS interfaces identified above to piping outside containment rated for pressures below that of the RCS. As previously stated, flow paths through pipes with an inside diameter less than or equal to 3/8 inches are not considered since the maximum RCS flow rate through these pipes is less than the capacity of the normal charging system.

Figures 1-5 document all significant ISLOCA flow paths identified in this examination. These figures show the potential ISLOCA flow paths from the RCS to low pressure piping outside containment. All valves present on the flow paths are shown on the figures as they are aligned for normal power operation. The setpoints or actuation signals of automatically actuated valves are shown on the figures near the valve they describe, and the pressure rating of all piping is indicated in the figures.

ISLOCA Through RHR Suction Lines

Primary system coolant could potentially be lost outside containment through the discharge lines of the residual heat removal (RHR) (LHSI) system. This is shown in Figure 1.

The RHR hot leg suction ISLOCA is considered to be a dominant contributor to overall ISLOCA frequency. This pathway is also generally considered the most severe ISLOCA due to its effect on the long-term heat removal capability of the plant.

At the time of initiation of the ISLOCA, the reactor is assumed to be in an equilibrium condition at power (mode 1). The event is initiated by the failure of the pressure boundary between the RCS and one train of RHR pump suction piping and is assumed to occur over a short period of time, such that no prior indications of pressure boundary deterioration are available. Early indications provided by a "slow" or partial breach of the pressure boundary would provide additional time for event diagnosis and recovery actions.

The piping and valves on both RHR suction lines from the RCS up to and including the two isolation motor-operated valves (MOVs) inside containment are rated for 2485 psig. There is no isolation capability between the inboard isolation MOVs and the RHR pumps, and this piping is rated for 600 psig.

At FNP, the most credible mechanism for initiation of an RHR suction ISLOCA during power operation is the catastrophic rupture of the closed MOVs isolating the RHR pump suction from the RCS. FNP utilizes an RHR/RCS valve permissive interlock to prevent inadvertently opening the RHR hot leg suction valves while the primary system pressure is greater than or equal to 402.5 psig. RHR suction valves will automatically close when pressure is greater than 700 psig (acceptance criteria between 700 and 750 psig). These valve interlocks are verified operable at least once every 18 months per STP-11.5.

The area of the pressure boundary failure is assumed to be the maximum possible break area assuming the failure of two MOVs in series, the RHR loop suction MOVs. (Q1/2E11V016A and Q1/2E11V001A, or Q1/2E11V016B and Q1/2E11V001B).

Following the RCS to RHR pressure boundary failure, the RHR system will be able to withstand RCS pressure if the hoop stress imposed on the RHR system by exposure to RCS pressures is below the yield stress. However, the RHR pump seals in both trains are expected to rupture. This rupture of pump seals is assumed to result in failure of both RHR pumps (i.e., motors short due to water spray).

Five relief valves connected to the RHR piping provide overpressure protection for the RHR piping. Two 3-inch relief valves installed on the RHR suction lines (one per line) are designed to discharge at 450 psig. Three 3/4-inch relief valves installed on the RHR discharge lines are designed to discharge at 600 psig. All five relief valves discharge to the pressurizer relief tank (PRT).

Given overpressurization of the RHR system, all five relief valves will open. The combined capacity of these five relief valves is equal to a 4.4 inch equivalent diameter pipe break. Flow through these relief valves is assumed to quickly increase pressure in the PRT and rupture the PRT rupture disks. The result is a concurrent release inside and outside containment.

Beyond this point, the ISLOCA would progress in a manner similar to a hot leg medium LOCA except that coolant recirculation would be unavailable because of the loss of both RHR pumps and the loss of coolant inventory outside containment through the pump seals. The unavailability of coolant recirculation makes core damage an inevitable consequence of this scenario if no mechanism is found for transferring auxiliary building sump water back to the refueling water storage tank (RWST).

Core damage in an ISLOCA could be significantly delayed through strict conservation of the emergency core cooling system (ECCS) coolant available for injection into the RCS. The initial RWST inventory provides adequate coolant to keep the core covered for over 48 hours.

The ideal core cooling mode for conserving ECCS coolant in an ISLOCA is to maintain the vessel water level between the top of the core and the bottom of the hot leg. In this configuration, the vessel would essentially be a "boiling pot." Core decay heat would be carried away through steam flow out of the RHR system break, and "feed" into the vessel would be

provided by careful regulation of ECCS flow. If the vessel water level is allowed to reach the hot leg elevation, liquid water would be lost through the RHR system break. If the vessel water level is allowed to drop below the top of the core, fuel damage will result. The key to significantly delaying core damage in an ISLOCA is for the operators to diagnose the ISLOCA in a reasonably short period of time and establish this "boiling pot" core-cooling mode.

The operators can delay core damage beyond 24 hours by terminating SI, aligning the normal charging system, and adjusting charging flow to the minimum required to remove decay heat.

In summary, the time of core damage in this accident sequence is simply a function of how long it takes to deplete the RWST (diagnose the accident as a loss of coolant accident (LOCA) outside containment, consult the appropriate procedure, and actually reduce SI flow to the minimum required to remove decay heat; core damage can be delayed beyond 24 hours).

ISLOCA Through the Seal Water Return and Excess Letdown Line

As seen in Figure 2, primary system coolant could be potentially lost outside of containment through the RCP #1 seal water return and excess letdown line. Two different events could expose the seal water return and excess letdown line to RCS pressure. First, one of the three RCP #1 seals could develop excessive leakage. Second, the valves controlling RCS excess letdown flow could develop excessive leakage. However, an ISLOCA through an RCP #1 seal is much more probable than an ISLOCA through the excess letdown line for the following two reasons. First, the excess letdown line isolation and throttle valves are normally closed while the #1 seal water return lines directly downstream of the RCPs are normally open. Second, the isolation valves on the excess letdown line identified above all fail closed while the isolation valves on the #1 seal water return lines identified above fail open.

The seal water return line is equipped with a flow meters and a high flow alarm to alert the operators to the seal LOCA. Given this indication of #1 seal failure, plant procedures direct the operators to isolate the #1 seal leakoff on the affected pump.

If the operator does not attempt to isolate the seal return line, this LOCA would lead to low pressurizer pressure, which would generate an "S" signal and a containment isolation phase

A ('T' signal). This "T" signal would then automatically close the two motor-operated isolation valves installed on containment penetration 28.

ISLOCA Through the RCP Thermal Barrier Heat Exchanger

As seen in Figure 3, primary system coolant could potentially be lost outside containment through CCW piping connected to the RCP thermal barrier heat exchangers. Given leakage of primary coolant into the RCP thermal barrier heat exchanger, the coolant could escape the reactor building through three penetrations: penetration 42, 43, or 44. The simplest case and highest failure probability is penetration 44. If the check valve upstream of the leaking thermal barrier heat exchanger fails to close, primary coolant would travel through the CCW side of the RCP bearing oil coolers and out of containment through penetration 44. Although containment penetration 44 is equipped with two isolation valves, these valves do not automatically isolate until they receive a containment isolation phase B signal. This signal would not be expected to occur until after a significant amount of primary system coolant was lost from the RCS.

Given leakage of primary coolant into an RCP thermal barrier heat exchanger, the containment isolation valves installed on penetration 43 would close automatically. The inboard isolation air-operated valve installed on penetration 43 (HV-3184) automatically closes on high CCW pressure from any RCP thermal barrier heat exchanger, which would be expected in the event of heat exchanger failure. The outboard isolation air-operated valve installed on penetration 43 (HV-3045) automatically closes on high flow through the penetration, which would also be expected.

ISLOCA Through Containment Penetrations Between the RCS and Centrifugal Charging Pump Discharge Header

Primary system coolant could potentially be lost outside containment through piping on the suction side of the centrifugal charging/SI pumps. Figure 4 shows the convergence of these flow paths on the charging pump discharge header.

The charging pump discharge piping and HHSI lines are rated for a pressure of 2485 psig; the RCS charging line is rated for a pressure of 2485 psig; and the RCP seal injection lines are also rated for a pressure of 2485 psig. These process lines are considered potential ISLOCA

pathways because the charging pump suction piping is only rated for a maximum pressure of 150 psig. Component misalignment or failure could expose this low pressure piping to RCS pressure, potentially leading to a loss of primary system coolant outside of containment.

During normal power operation, three components act as the pressure boundary between the RCS and the charging pump suction piping, one operating charging pump and one check valve downstream of each of the two idle charging pumps. An ISLOCA through the charging pump suction piping must begin with the loss of this pressure boundary.

This pressure boundary could be lost two ways. First, the operating charging pump stops running, and the check valve on the discharge side of this pump fails to close. This stopping of the operating charging pump could be due to mechanical failure of the pump or due to intentional operator action. However, since normal practice at FNP is to keep one pump in operation at all times, and there are no regularly scheduled procedures which direct the operators to stop an operating charging pump, mechanical failure was taken to be the dominant contributor to a pump's failure to run.

The second event which would result in the loss of the normal pressure boundary between the RCS is the rupture of one of the normally closed check valves on the discharge side of the two idle charging pumps. It is further assumed that an idle charging pump would not be able to be started after its discharge check valve has ruptured.

Given the exposure of low pressure CVCS piping to the charging pump discharge header pressure, there are three types of flow paths through which primary coolant can reach the charging pump discharge header, the normal charging line, the RCP seal water injection line, and the HHSI lines. However, an ISLOCA through the HHSI lines is several orders of magnitude less probable than an ISLOCA through either the normal charging line or seal water injection line for two reasons. First, the check valves in the HHSI lines are closed when the RCS is pressurized. STP-158 ensures that the leakage through these valves is within acceptable limits. However, the check valves in the normal charging and seal water injection lines are normally open during power operation. Second, the MOVs between the charging pump discharge header and the HHSI lines are closed during power operation. However, the MOVs and air-operated valves (AOVs) between the charging pump discharge header and the charging and seal water injection lines are normally open during power operation. For these two reasons, the frequency

of an ISLOCA through the HHSI lines is not significant in comparison to the ISLOCA frequency through the normal charging and seal water injection lines.

The normal charging and seal water injection lines are designed with three check valves in series to prevent backflow of primary coolant if the charging pump discharge header loses pressure (Figure 5).

ISLOCA Through RHR Discharge Lines

Primary system coolant could potentially be lost outside containment through the discharge lines of the RHR (LHSI) system (Figure 1).

The piping and valves on the RHR discharge lines from the RCS up to and including the outboard containment isolation MOVs are rated for a maximum pressure of 2485 psig; the piping and valves from these MOVs up to and including the RHR pumps are rated for a maximum pressure of 600 psig; and the piping and valves on the suction side of the RHR pumps are rated for a maximum pressure of 600 psig.

The only isolation valve failure modes of interest for failure of the normally closed valves to isolate the RHR discharge from the RCS is catastrophic rupture. By performing STP-1.0 during every shift, the operators check that MOV-8889 (shown on Figure 4) is closed, and its power is locked out while the plant is in modes 1 through 3. Performance of STP-158 each refueling outage verifies that the RHR check valves inside containment have closed before the plant enters modes 1 through 4.

The following flow paths are not considered significant ISLOCA flow paths, as explained in the following paragraphs:

- Flow paths from the accumulators to piping outside containment
- Flow paths from the PRT to piping outside containment
- Flow paths from the reactor coolant drain tank (RCDT) to piping outside containment
- The normal letdown line
- The RCP seal water bypass line

Flow paths between the accumulators, PRT, and RCDT and piping outside containment are not considered significant pathways for ISLOCA outside containment because the pressure ratings of the accumulators, PRT, and RCDT are significantly below normal RCS pressure.

Therefore, the pressure relief valves and/or rupture disks installed on these components would result in primary coolant loss into containment rather than out of containment.

Flow paths through the normal letdown line and RCP #1 seal water bypass lines are not considered significant ISLOCA pathways because of orifices installed in the lines. The three, parallel letdown orifices installed in the normal letdown line are sized to allow a combined maximum RCS letdown flow which, in addition to normal RCP seal injection flow, is below the capacity of normal charging. The inside diameter of the seal bypass orifice is 0.065 inches. Uncontrolled primary coolant loss through this orifice would also be well below the capacity of normal charging. There is also no credible failure mechanism whereby the effective inside diameter of the letdown orifice is dramatically increased without rupturing the orifice itself. Any catastrophic rupture of a letdown orifice would effectively be a pipe break inside containment.

A LOCA outside containment is considered to be a credible accident based upon its probability of occurrence, and, therefore, procedural guidance has been developed to address a break occurring outside containment. A probabilistic risk assessment (PRA) study has been performed assuming a typical plant design configuration. This study shows that the probability of a LOCA occurring outside containment is greater than 10^{-8}.

Specifically, the PRA study considered three cases associated with the interface between the RHR system and the RCS for a typical plant design configuration:

1. LHSI pump cold leg injection path
2. LHSI pump hot leg injection path
3. LHSI pump suction to RCS path

Refer to Figures 6, 7, and 8 for the representation of these three cases.

Case 1: LHSI Pump Cold Leg Injection Path

Figure 6 depicts the cold leg injection arrangement of the low pressure injection system for the typical plant considered in the PRA study. Referring to Figure 6, in order to have a LOCA outside containment, simultaneous disc rupture must occur in three series check valves. If this occurred, the low pressure piping upstream of the containment isolation valves (MOVs) would be exposed to the existing RCS pressure.

Case 2: LHSI Pump Hot Leg Injection Path

Figure 7 depicts the hot leg injection arrangement of the low pressure injection system for the typical plant considered in the PRA study. Referring to Figure 7, in order to have a LOCA outside containment through this path, simultaneous disc rupture must exist in two series check valves in one of two paths and disc rupture or leakage through a normally closed, motor-operated containment isolation valve. If this occurred, the low pressure piping upstream of the MOV outside containment would be exposed to the existing RCS pressure.

Case 3: LHSI Pump Suction to RCS Path

Figure 8 depicts the RHR suction arrangement of the typical plant studied. Referring to Figure 8, in order to have a LOCA outside containment, simultaneous disc rupture and/or disc failing open must exist in two series MOVs. If this occurs, the low pressure piping downstream of the second motor-operated isolation valve would be exposed to the existing RCS pressure.

The RHR suction path is the dominant probability and is greater than the 10^{-8} cutoff probability used in the development of Emergency Response Guidelines (ERGs).

ECP-1.2, LOCA OUTSIDE CONTAINMENT, presents actions which attempt to identify and isolate a loss of RCS inventory outside containment. A LOCA outside containment is postulated based upon (1) the disc rupture of series check valves or MOVs or (2) the disc failing open on MOVs in one of three low pressure injection lines, i.e., the interface between the RHR system and the RCS. This event results in a LOCA in which no water can be recirculated from the containment sump, and the low pressure recirculation mode of core cooling is lost due to the rupture of the low pressure piping.

Major Action Categories in ECP-1.2

1. Verify proper valve alignment.
2. Identify and isolate break.
3. Check if break is isolated.

Verify Proper Valve Alignment

The first instruction given to the operator is to verify that all normally closed valves in lines that penetrate containment are closed. If a normally closed valve is open, this action may isolate the break.

Identify and Isolate Break

The operator then attempts to identify and isolate the break by sequentially closing all normally open valves in paths that penetrate containment. .

Check If Break Is Isolated

RCS pressure is monitored to determine if the break has been isolated. A significant increase in RCS pressure indicates the break is isolated, and the operator is sent to EEP-1, LOSS OF REACTOR OR SECONDARY COOLANT. If the break is not identified and isolated, the operator transfers to ECP-1.1, LOSS OF EMERGENCY COOLANT RECIRCULATION, for further recovery actions.

Emergency Plan Implementation

It is good operational practice to consider the Emergency Implementation Procedure (EIP) notification requirements any time emergency procedures are exited. Reporting requirements exist for any event or condition that results in manual or automatic actuation of any emergency safety feature (ESF), including the reactor protection system (RPS).

Depending on the initiating event(s), ESF actuations may require declaration of any of the four emergency classifications or no declaration at all. EIP-9 must be studied by the OSS/ED. The study is performed to determine if an emergency declaration is required and, if so, the level of declaration required to provide the needed protection to the public.

ESF actuations might also result in declaration of a notification of unusual event (NOUE) emergency condition. A NOUE may be declared if a safety injection actuation was initiated either automatically or manually as a result of plant parameters approaching or reaching their setpoint. Other examples of events which might lead to NOUE declaration are loss of subcooling margin (< 10°F), failure of safety and relief valves to close, and loss of secondary coolant outside containment

concurrent with ECCS activation. The NOUE required actions of EIP-9, Guideline 4 also do not include the requirement to sound the plant emergency alarm.

An alert emergency condition might also be declared for events which would result in ESF actuation. Some examples of these types of events are a primary coolant leak greater than 50 gpm, a large steam generator tube rupture, a steam generator tube leak greater than 10 gpm coincident with a steam line break outside containment, or an indicated secondary break inside containment. If the OSS/ED determines through examination of Guideline 3 of EIP-9 that an alert emergency condition must be declared, then Guideline 3 of EIP-9 would be completed.

A site area emergency condition might be declared for several events, which would result in ESF actuation. Some examples of these types of events are a major loss of primary coolant, a loss of off-site power (LOSP) coincident with a large steam generator tube rupture, or a small steam generator tube rupture coincident with high RCS activity and an indicated secondary coolant break outside containment. If the OSS/ED determines through examination of Guideline 2 of EIP-9 that a site area emergency should be declared, then the team must ensure that EIP-9, Guideline 2 requirements are completed.

A general emergency declaration is not expected to be required, but must be carefully eliminated per the criteria established by Guideline 1 of EIP-9. If it is determined that a general emergency condition exists, the OSS/ED must ensure that the requirements of EIP-9, Guideline 1 is completed.

DETAILED DESCRIPTION

The following is a synopsis of the steps, notes and cautions and may not necessarily match the order that the procedure addresses these items. Although this section will try to place the step as close to the order as the procedure sequences the step.

ECP-1.2, LOCA OUTSIDE CONTAINMENT, has been developed to attempt to isolate a LOCA outside containment. This procedure is entered from EEP-0 or EEP-1 based on indication of abnormal auxiliary building radiation or an ISLOCA outside containment . There are two transitions from this procedure. First, if the break is isolated based upon increasing RCS pressure, the operator is transferred to EEP-1, LOSS OF REACTOR OR SECONDARY COOLANT. Second, if the break cannot be isolated, the operator is sent to ECP-1.1, LOSS OF

EMERGENCY COOLANT RECIRCULATION, since there will not be any fluid inventory in the containment sump to provide recirculation capability.

Proper Valve Alignment

This step instructs the operator to verify that all normally closed valves in low pressure lines and other plant-specific lines that penetrate containment are closed. The valving connecting the RHR system to the RCS is of particular interest in this step since the RHR system is a low pressure system (600 psig) connected to the high pressure RCS (2485 psig). Therefore, a rupture or break outside containment is most probable to occur in the low pressure RHR system piping.

Check If Break Is Isolated

This step instructs the operator to check RCS pressure to determine if the break has been isolated by previous actions. If the break is isolated in step 1, a significant RCS pressure increase will occur due to the SI flow filling up the RCS with break flow stopped.

The operator transfers to EEP-1, LOSS OF REACTOR OR SECONDARY COOLANT, if the break has been isolated, for further recovery actions. If the break has not been isolated, the operator is to continue with the procedure to identify the source of leakage.

Identify and Isolate Break

This step instructs the operator to sequentially close normally opened valves in paths that penetrate containment to identify and isolate the break outside containment. A check is made to determine if leak is isolated by checking RCS pressure rising. If leak is not isolated, the system is realigned and another flowpath is isolated to identify the leak. When the source of the leakage is identified and isolated, the team will exit this procedure and go to EEP-1. Again, the valving connecting the low pressure (600 psig) RHR system to the high pressure (2485 psig) RCS is of primary interest, since the probability of a break occurring outside containment is most probable to occur in the low pressure RHR system piping.

Health physics personnel should be directed to perform radiological surveys in the auxiliary building and other operations personnel should be directed to locally inspect the

72. W/E08G2.4.48 001/1/2/PTS/C/A 3.5/3.8/NEW/FA011005/RO/

A steam break has occurred on Unit 1 affecting ALL steam generators. ECP-2.1, Uncontrolled Depressurization of All Steam Generators, has been entered.

At time 0900 the following conditions existed:

- RCS cold leg temperatures A = 485°F, B = 482°F, C = 480°F
- SG WR water levels A = 42%, B=40%, C= 41%
- AFW flow A = 135 gpm, B = 140 gpm, C = 145 gpm
- RCS pressure PI 402 = 1400 psi
  PI 403 = 1450 psi

At time 1000 and the following conditions exist:

- RCS cold leg temperatures A = 350°F, B = 348°F, C = 355°F
- All RCS hot leg temperatures are continuing to decrease slowly.
- SG WR water levels A = 22%, B=20%, C= 21%
- AFW flow A = 50 gpm, B = 50 gpm, C = 50 gpm
- RCS pressure PI 402 = 1400 psi
  PI 403 = 1450 psi

Based on the above information, which one of the following is the correct action to take in regards to AFW flow and the reason for that action?

A. Throttle AFW flow to as low as 20 gpm to prevent SG tube damage and control RCS hot leg temperature stable or falling.

B. Stop AFW flow to All SGs to stop the cooldown of the RCS and to prevent brittle fracture of the beltline region the of the reactor vessel.

C. Throttle AFW flow to one SG to 20 gpm and stop AFW flow to the other two SGs to maintain one SG available for cooldown and to prevent SG tube damage to the other two SGs.

D. Increase AFW flow to greater than 395 gpm to prevent entry into FRP-H.1, Response to Loss of Secondary Heat Sink, and maintain SG water levels above the SG tube bundle to prevent tube damage.

Reference ECP-2.1, OPS-52532F and CSF-0.0

A. Correct, **Throttle AFW flow to as low as 20 gpm to prevent SG tube damage and control RCS hot leg temperature stable or falling.**
This is the correct action to take in ECP-2.1. 20 GPM is to limit the cooldown of the RCS to prevent a PTS concern and to maintain SG flow to prevent SG tube damage during a time when the SG may be hot and operating with a very low level of liquid available in the SG for proper heat transfer.

B. Incorrect, Stopping AFW flow to any SG is incorrect as tube damage could result. The reason given is for PTS concerns and P.1 is not in effect at this time due to RCS temp and pressure.

C. Incorrect - Throttling AFW flow to just 1 SG is not an option in the procedure. Step 4 has the team maintain at least 20 gpm to SGs with NR < 31%. Also allowing 2 SGs to dry out is a concern for tube damage, we don't allow them to dry out to prevent tube damage.

D. Incorrect, the note prior to step 5 states:
NOTE: Throttling AFW flow in the following RNO step may result in a Red Path. However, transition to FNP-1-FRP-H.1, RESPONSE TO LOSS OF SECONDARY HEAT SINK should only be made when AFW flow of 395 gpm is unavailable, and NOT due to deliberate operator action. Step 5 has the operator reduce AFW flow to <20 gpm if RCS cooldown is >100°F in 60 min period and then to stablize or cause HL temperature to decrease.

W/E08 RCS OVERCOOLING - PTS G2.4.48 - Ability to interpret control room indications to verify the status and operation of system, and understand how operator actions and directives affect plant and system conditions.

Analyze plant indications to determine the successful completion of any step in ECP-2.1. (OPS52532F07)

Evaluate plant conditions and determine if transition to another section of ECP-2.1 or to another procedure is required. (OPS52532F08)

Evaluate plant conditions to determine if the critical safety functions are satisfied while performing ECP-2.1. (OPS52532F09)

ECP-2.1-52532F06 #2

Step	Action/Expected Response	Response NOT Obtained
___ 3	**Verify operator control of AFW flow restored.**	
	3.1 Verify AFW auto start signals on the AFW flow control valves - RESET. MDAFWP FCV 3227 RESET [] A TRN reset [] B TRN reset TDAFWP FCV 3228 [] RESET reset	
	3.2 Verify AFW flow control valve handswitches - IN THE MODULATE POSITION. MDAFWP TO 1A/1B/1C SG B TRN [] FCV 3227 in MOD MDAFWP TO 1A(1B,1C) SG [] Q1N23HV3227A in MOD [] Q1N23HV3227B in MOD [] Q1N23HV3227C in MOD TDAFWP TO 1A(1B,1C) SG [] Q1N23HV3228A in MOD [] Q1N23HV3228B in MOD [] Q1N23HV3228C in MOD	
___ 4	**Maintain at least 20 gpm AFW flow to SGs with narrow range level less than 31%{48%}.** AFW FLOW TO 1A(1B,1C) SG [] FI 3229A [] FI 3229B [] FI 3229C	

___Page Completed

Step	Action/Expected Response	Response NOT Obtained

NOTE: Throttling AFW flow in the following RNO step may result in a Red Path. However, transition to FNP-1-FRP-H.1, RESPONSE TO LOSS OF SECONDARY HEAT SINK should only be made when AFW flow of 395 gpm is unavailable, and NOT due to deliberate operator action.

5 Control AFW flow to minimize RCS cooldown.

5.1 Check cooldown rate in RCS cold legs - LESS THAN 100°F IN ANY 60 MINUTE PERIOD.

RCS COLD LEG TEMP
[] TR 410

5.1 Reduce AFW flow to 20 gpm to each SG and proceed to step 5.3.

MDAFWP TO 1A(1B,1C) SG FLOW CONT
[] HIC 3227AA adjusted
[] HIC 3227BA adjusted
[] HIC 3227CA adjusted

TDAFWP TO 1A(1B,1C) SG FLOW CONT
[] HIC 3228AA adjusted
[] HIC 3228BA adjusted
[] HIC 3228CA adjusted

5.2 Check narrow range level in all SGs - LESS THAN 65%.

5.2 Control AFW flow to maintain narrow range level in all SGs less than 65%.

MDAFWP TO 1A(1B,1C) SG FLOW CONT
[] HIC 3227AA adjusted
[] HIC 3227BA adjusted
[] HIC 3227CA adjusted

TDAFWP TO 1A(1B,1C) SG FLOW CONT
[] HIC 3228AA adjusted
[] HIC 3228BA adjusted
[] HIC 3228CA adjusted

Step 5 continued on next page.

Step	Action/Expected Response	Response NOT Obtained
	5.3 Check RCS hot leg temperatures - STABLE OR FALLING. RCS HOT LEG TEMP [] TR 413	5.3 Stabilize RCS hot leg temperature. 5.3.1 Control AFW flow to stabilize RCS hot leg temperatures. MDAFWP TO 1A(1B,1C) SG FLOW CONT [] HIC 3227AA adjusted [] HIC 3227BA adjusted [] HIC 3227CA adjusted TDAFWP TO 1A(1B,1C) SG FLOW CONT [] HIC 3228AA adjusted [] HIC 3228BA adjusted [] HIC 3228CA adjusted 5.3.2 <u>IF</u> RCS hot leg temperatures continue to rise, <u>THEN</u> control SG atmospheric relief valves to stabilize RCS hot leg temperatures. 1A(1B,1C) MS ATMOS REL VLV [] PC 3371A adjusted [] PC 3371B adjusted [] PC 3371C adjusted
___	**6 Maintain seal injection flow to each RCP - 6-13 gpm.** SEAL WTR INJECTION [] HIK 186 adjusted	
___	**7 Check RCP criteria.**	
	7.1 Check SUB COOLED MARGIN MONITOR indication - GREATER THAN 16°F(45°F) SUBCOOLED IN CETC MODE.	7.1 <u>IF</u> HHSI flow greater than 0 gpm, <u>THEN</u> stop all RCPs. RCP [] 1A [] 1B [] 1C

___Page Completed

that HV-3226 is controlled from a common handswitch with HV-3235A and that HV-3226 fails open on loss of instrument air.)

A caution has been added, if the TDAFW pump is required, alerts that "Failing open TDAFW STM SUPP ISO Q1N12HV3226 will cause the RGSC (Ramp Generator Signal Converter) to ramp to maximum output. Admitting steam to the TDAFWP with TDAFWP SPEED CONT SIC-3405 NOT set to 0% could cause a TDAFWP overspeed trip."

If the TDAFW pump is required, then perform one of the following two options:

1. Close the TDAFW Steam warm up isolation valves. If the TDAFW pump is NOT in operation, then adjust TDAFW pump speed control to 0%. Once this is completed, then you can open TDAFW Steam Supply HV3226 and then isolate steam from the B Steam Generator from the HSD panel by going to local and stop. Then all that is needed, if the TDAFW pump is needed, is to raise the speed of the TDAFW pump, assuming the steam supply from the C Steam Generator is open.
2. The alternative is to manually unlock and close steam line B to TDAFW pump isolation locally.

Operator Control of AFW Flow

The minimum AFW flow stated, 20 gpm, satisfies the heat sink requirement until any narrow range steam generator level is restored greater than 31% {48%}. This low flow helps to prevent the steam generator from tube dryout and damage to the SG during a time when the SG may be hot and operating with a very low level of liquid available in the SG for proper heat transfer.

Once level is restored greater than 31% {48%}, the operator should throttle motor-driven auxiliary feedwater (MDAFW) and TDAFW flow as necessary to maintain steam generator level in the band of 31% to 65%. The operator should also minimize RCS cooldown by controlling the AFW flow to maintain less than 100°F in any 60 minute period.

A note reminds the operator that throttling AFW flow may result in a red path for heat sink. However, transition to FRP-H.1 should only be made when AFW flow of 395 gpm is unavailable and not due to deliberate operator action.

In order to throttle the MDAFW flow control valves (FCVs) after automatic start, both the MDAFW FCV-3227 RESET TRAIN A handswitch and the MDAFW FCV-3227 RESET TRAIN B handswitch must be taken to reset. In addition, the individual FCV handswitch must be in the

modulate (MOD) position. If any steam generator level should decrease below 28% on 2/3 indicators, white lights on the train-oriented RESET handswitches will relight and the FCVs will be automatically reopened if modulated. In order to regain modulation control, the reset process will have to be performed again.

In order to throttle the TDAFW flow control valves after automatic start, the TDAFW FCV-3228 RESET TRAIN C handswitch must be taken to reset and the individual FCV handswitch must be in the modulate (MOD) position. If the level in any two steam generators should decrease below 28% on 2/3 indicators after reset, the white light on the train C reset handswitch will relight and the FCVs, if modulated, will be automatically reopened. In order to regain modulation control, the reset process must be performed once again. If TDAFW flow needs to be throttled, the option of controlling TDAFW speed may be used to lower the cooldown effects of running the TDAFW pump.

Seal Injection Flow

RCP seal degradation may occur if seal injection is not maintained to all RCPs. Seals still require cool injection flow even if pumps are not rotating. Maintaining seal injection flow ensures the seals remain intact, thus reducing leakage from the RCS. Maintenance of seal injection flow also lessens the potential for seal failure if component cooling water (CCW) to or from the thermal barrier is interrupted during the accident. CCW from the thermal barriers would be isolated in the event of a loss of instrument air.

RCP Criteria

RCP trip criteria have been developed and incorporated into the ERPs to provide for RCP trip when required and to minimize the probability of RCP trip when not required. The RCP trip criteria consist of two fundamental parts:

1. Successful operation of the SI system
2. Selected plant parameters reaching critical setpoints (subcooling)

In the ERPs, the RCPs are not tripped unless this two-part criteria is satisfied. It cannot be emphasized too strongly that a fundamental condition which must be satisfied for RCP trip during an emergency condition is that at least one high-head safety injection (HHSI) pump be in operation delivering flow to the RCS. If this fundamental condition is not met, the RCPs should not be

Step	Action/Expected Response	Response NOT Obtained
1	**Monitor SI reinitiation criteria.**	
1.1	Greater than 16°F(45°F) subcooled in CETC mode and PRZR level above 7%(50%).	1.1 Establish HHSI flow, and start additional CHG PUMPs as required using ATTACHMENT 3, RE-ESTABLISHING HHSI FLOW.
2	**Monitor CSF red path criteria.**	
2.1	Nuclear power less than 5%.	2.1 Go to FNP-1-FRP-S.1.
2.2	Core exit T/Cs less than 1200°F.	2.2 Go to FNP-1-FRP-C.1.
2.3	Total available AFW flow greater than 395 gpm.	2.3 Go to FNP-1-FRP-H.1.
2.4	RCS cold leg temperature greater than 250°F or cooldown rate less than 100°F in last 60 minutes.	2.4 Go to FNP-1-FRP-P.1.
2.5	CTMT pressure less than 54 psig.	2.5 Go to FNP-1-FRP-Z.1.
3	**Monitor FNP-1-EEP-2 branching criteria (except during SI termination in steps 17 through 26).**	
3.1	IF any SG pressure rising, THEN go to FNP-1-EEP-2.	
4	**Monitor FNP-1-EEP-3 branching criteria.**	
4.1	No high secondary radiation or SG level rising uncontrolled.	4.1 Go to FNP-1-EEP-3.
5	**Monitor switchover criteria.**	
5.1	RWST level greater than 12.5 ft.	5.1 Go to FNP-1-ESP-1.3.
5.2	CST level greater than 5.3 ft.	5.2 Align AFW pumps suction to SW using FNP-1-SOP-22.0.
6	**Monitor charging miniflow criteria (during SI).**	
6.1	RCS pressure less than 1900 psig.	6.1 Verify miniflow valves open.
6.2	RCS pressure greater than 1300 psig.	6.2 Verify miniflow valves closed.
7	**Monitor adverse containment criteria.**	
7.1	CTMT pressure less than 4 psig and radiation less than 10^5 R/hr.	7.1 Utilize bracketed adverse CTMT condition numbers.

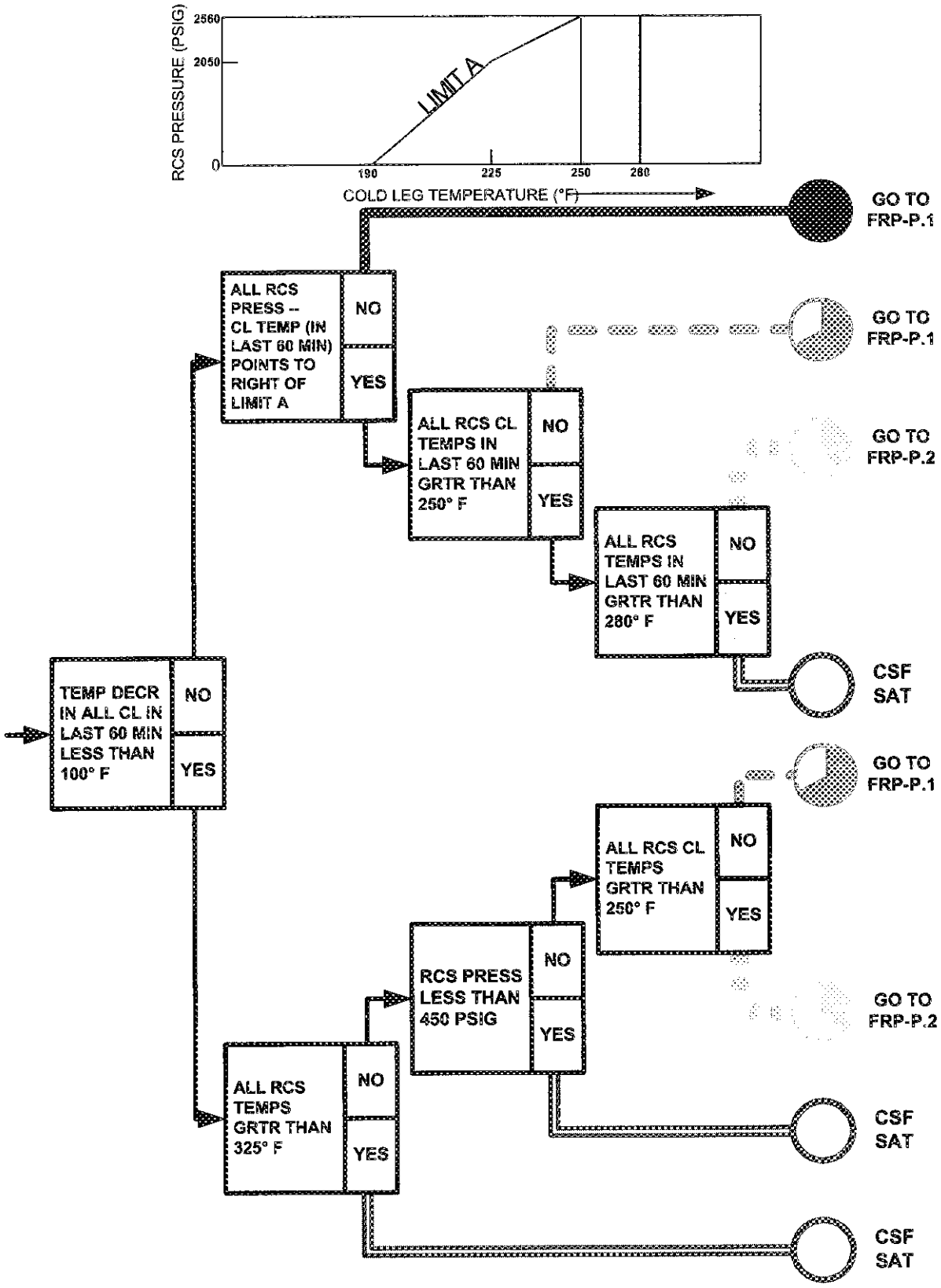
RCS PRESSURE (PSIG)
2560
2050
0
LIMIT A
190
225
250
280
COLD LEG TEMPERATURE (°F)
GO TO FRP-P.1
ALL RCS PRESS -- CL TEMP (IN LAST 60 MIN) POINTS TO RIGHT OF LIMIT A
NO
YES
GO TO FRP-P.1
ALL RCS CL TEMPS IN LAST 60 MIN GRTR THAN 250° F
NO
YES
GO TO FRP-P.2
ALL RCS TEMPS IN LAST 60 MIN GRTR THAN 280° F
NO
YES
CSF SAT
TEMP DECR IN ALL CL IN LAST 60 MIN LESS THAN 100° F
NO
YES
GO TO FRP-P.1
ALL RCS CL TEMPS GRTR THAN 250° F
NO
YES
RCS PRESS LESS THAN 450 PSIG
NO
YES
GO TO FRP-P.2
ALL RCS TEMPS GRTR THAN 325° F
NO
YES
CSF SAT
CSF SAT

INTEGRITY

RCS PRESSURE - TEMPERATURE CRITERIA

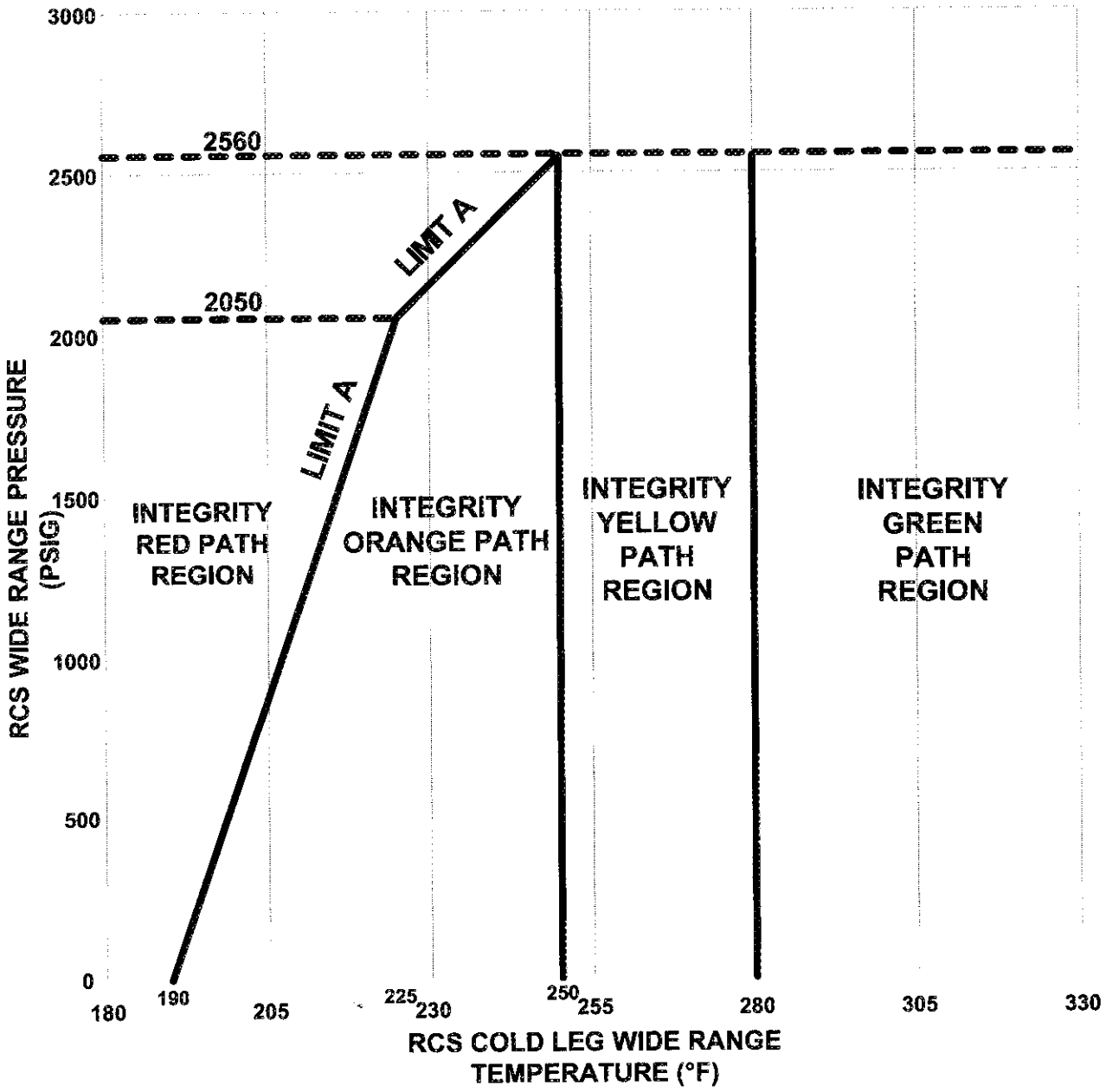

73. W/E09EK3.3 001/1/2/ESP-0.1/C/A 3.5/3.6/MOD/FA011005/RO/

ESP-0.1, Reactor Trip Response, has been entered following an LOSP. A check of RCP support conditions is in progress to determine if RCPs can be started.

The following conditions exist:

- HH1, 2 and 3, RCP 1A,1B and 1C UPPER/LOWER OIL RES LO LVL annunciators are in alarm.
- Off-Site Power has been restored.
- RCS ΔT is 68°F and increasing.
- SG pressure is rising.
- RCS subcooling is 25°F.
- Pzr level is 18% and stable.
- RCS Hot Leg temperatures are rising.

Which one of the following is the correct action and the reason for the action considering the above indications?

A. Dump steam at a faster rate to improve natural circulation.

B. Start the 1B RCP to reduce Delta T to get forced flow through the core.

C. Verify SI actuated and go to EEP-0, Reactor Trip and Safety Injection, to prevent an automatic SI.

D. Manually align SI flow and start additional charging pumps to raise Pzr level to keep the core covered.

ESP-0.1
A. Correct- **Dump steam at a faster rate to improve natural circulation.**
This is IAW the procedure to improve NC flow at step 15 RNO.

B. Incorrect- All of the start criteria is not met so a RCP can not be started.

C. Incorrect- Actuating a SI without having SI setpoints being challenged or approached is not correct. The team needs to get NC flow improved.

D. Incorrect- Pzr level is not low enough and is not deteriorating so aligning SI flow is not warranted. Also a Manual SI would be more correct than manually aligning SI flow when one did not exist prior to this.

W/E09 EK3.3 Natural Circulation - Knowledge of the reasons for the following responses as they apply to the (Natural Circulation Operations):
Manipulation of controls required to obtain desired operating results during abnormal, and emergency situations.

Evaluate plant conditions to determine if any system components need to be operated while performing ESP-0.1. (OPS52531B06)

modified from ESP-0.1-52531B06 #2

original question

QUESTIONS REPORT

for WE09ek3.3 Questions

ESP-0.1-52531B06 002/HLT/LOCT//C/A (LEVEL 2/3) PROC/EPEE09EK3.3///LOCT/

The reactor trip response procedure has been entered following an LOSP. A check of RCP support conditions is in process to determine if RCPs can be started. The RCP upper/lower oil reservoir Lo level annunciators are in alarm for all three RCPs. RCS Delta T is now 68°F. The operator should: (Note: Off-site power has been restored.)

A. Dump steam at a faster rate to improve natural circulation.

B. Manually align SI flow and start additional charging pumps.

C. Start the B RCP to reduce Delta T.

D. Reduce steam dump demand to reduce RCS Delta T.

ESP-0.1

primary Tavg to decrease below its no-load value. As you expect, this would increase the magnitude of change in those parameters that we have seen that are linked to changes in Tavg.

The operator's goal following a reactor trip is to stabilize the plant through operation of these and other automatic and manual control systems. An understanding of the thermal interdependence of the primary and secondary systems is necessary to allow the operational team to control effectively. It is important to make plant changes slowly and cautiously, whenever possible.

All the actions specified in the Reactor Trip Response Procedure are aimed at satisfying three very important objectives. Actual reactor shutdown is the most immediate and important objective of a reactor trip. Failure to shut down the reactor is an abnormal plant condition eventually leading to core damage if not addressed by the operator immediately. The reactor operator must, therefore, verify that shutdown is indeed occurring or take the necessary additional measures to force shutdown. Once shutdown has been verified, plant parameters must be controlled so as to prevent a return to criticality. Continued reactor coolant cooldown below the no-load temperature adds reactivity to the core. If the cooldown is caused by a failure of the turbine to trip during the reactor trip, the operator must intervene by tripping the turbine manually as required in EEP-0. If the turbine is not the source of cooldown, then actions within ESP-0.1 will be taken to stop the cooldown. Finally, decay heat removal must be assured to prevent core overheating and damage.

Core power generation continues by means of decay heat following a reactor trip. If the decay heat were not removed promptly, the core would overheat and could suffer significant damage. The first requirement for successful decay heat removal is reactor coolant flow. The flow can either be forced or, when no reactor coolant pump is running, can occur by natural circulation of the coolant itself. Core heat removal by forced circulation should always be the preferred method over natural circulation.

Reactor coolant flow only ensures that a heat convection path exists between the core and the steam generators. This heat removal path must be continued on the secondary side of the steam generator. This is done by release of steam to either the condenser or atmosphere and by maintaining a feedwater flow that is sufficient to cover completely the steam generator tubes and

stage impulse pressure, but the actual steam flow signal lags slightly due to secondary system and instrumentation response.

Reactor Trip Recovery with Loss of Forced RCS Flow

ESP-0.1 also deals with the specific actions necessary to stabilize and control the reactor plant following initiating events that result in a total loss of forced reactor coolant flow, including loss of off-site power (LOSP). While the causes of loss of RCS flow or LOSP may be entirely different, the subsequent plant response and required operator actions for each case are very similar.

An LOSP, in addition to causing a loss of forced reactor coolant flow condition, will result in the disabling of certain plant systems and components due to deenergization of their electrical supply buses. Generally, all critical surveillance, control and safeguards actuation systems are continuously powered from the plant's redundant batteries until electrical power is restored. All safety-grade systems (emergency core cooling system [ECCS] pumps, for example) are repowered automatically by automatic start and loading of the emergency diesel-generator sets upon loss of bus voltage.

A number of operating elements for "non-safety-grade" systems and components may not be automatically reenergized upon closing of the diesel generator output breakers to the plant engineered safety features (ESF) buses. The availability of this equipment facilitates plant control during natural circulation operations.

If critical and below the power level setting of permissive P-7, the reactor will not necessarily trip following a loss of forced reactor coolant flow, and the operator should take action to place the plant in a shutdown condition. If the reactor plant is operating at power, the inertia of the rotating reactor coolant pump flywheels will ensure that coolant flow coastdown from full flow will occur at a rate which prevents core departure from nucleate boiling (DNB) limits from being violated. Transition from the decaying forced flow to a semi-steady-state natural convection flow in each loop is obtained in minimum time if the plant steam dump system operates to obtain and maintain no-load steam pressure automatically. Steam dump to the condenser is not available following an LOSP. In this case, reactor coolant average temperature

will increase until steam generator atmospheric relief valves open (approximately 4°F above no-load steam temperature) or until steam generator code safety valves lift (approximately 8°F above no-load steam temperature) to effect energy release from the RCS.

Reactor coolant system pressure and temperature will undergo transient variations depending upon the specific initiating event and automatic system response following the loss of forced reactor coolant flow. For both LOSP and loss of RCS flow, the automatic control of pressurizer pressure will be affected due to loss of normal spray flow.

Approximately 5-10 minutes after losing forced reactor coolant flow, conditions in the RCS should attain transient equilibrium. Transient equilibrium is attained when the heat transfer rates from core to coolant and coolant to steam generator secondary side begin to equalize with the natural circulation convective heat transport rate between core and steam generator.

The attainment of transient equilibrium in the natural circulation mode can be confirmed by observing certain RCS parameters, as given in the following:

a) Steam generator pressures should be maintained stable, or if cooldown in progress, pressures may be trending down.
b) Subcooling margin should be greater than 16°F in the core exit thermocouple (CETC) mode.
c) RCS hot leg temperatures should be stable or trending down slowly with time, as core decay heat output decreases.
d) CETCs should be stable or trending down.
e) RCS cold leg temperatures should be at the saturation temperature for the present steam generator pressure.

To facilitate the verification of transient equilibrium attainment in the natural circulation process, control room operators should attempt to record these parameters beginning as soon as possible after the event, at regular intervals. The continuous recording will provide trending information on the parameters of importance and minimize the chance of misinterpretation of any one set of readings. Variations in discrete readings, and between the same parameters in different loops, can result from several causes:

- Unequal heat transfer and heat transport processes between loops.

- Instrument inaccuracies.
- Differences in instrument sensing element placement between loops.
- Variations in feedwater flow rates to steam generators.
- Differences in location of various auxiliary system connections to the reactor coolant loop piping (e.g., coolant charging, letdown, surge line, etc.).

During natural circulation operations, the primary means available to the operator for verifying continued safe operation of the core in the subcooled convective heat transfer region at any given time is the determination of acceptable subcooling margin.

For the purposes of evaluating the progress of the natural circulation core cooling process, loop wide-range T_H and the CETCs are equally valuable. The trending of these temperatures over a relatively long period (say, 3-4 consecutive sets of readings taken at 20 minute intervals) should agree if the RCS is in a stable, free convection operating mode.

The presence of a loop ΔT is necessary if any free convection flow is to occur. Calculated ΔTs for Westinghouse pressurized water reactors (PWRs) are in the range of approximately 120% of full power loop ΔT downwards. The higher ΔTs should be obtainable only at the highest expected decay heat levels. These higher ΔTs will probably not be observable on system instrumentation since a stable, free convection process will not be set up until core decay heat levels have dropped significantly from their highest theoretically attainable values. AOP-4 states that as natural circulation develops, the ΔT should stabilize at $< 65°F$ and that wide-range T_H should be approximately equal to incore thermocouple temperature. The development of these conditions should occur in 20 to 30 minutes after the loss of forced flow.

In natural circulation operation, the loop transport time will be on the order of three to ten minutes, so changes in temperature will be gradual. It would be possible, however, to cause rapid fluctuations in primary plant pressure with rapid steam generator feeding or steaming. Therefore, rapid steam generator feeding or steaming should be avoided, especially during the formation of natural circulation.

Step	Action/Expected Response	Response NOT Obtained
1	**Monitor SI criteria.**	
1.1	Greater than 16°F subcooled in CETC mode and PRZR level above 7%.	1.1 Verify SI actuated, check for CSF red or orange paths, go to FNP-1-EEP-0.
2	**Monitor CSF red path criteria.**	
2.1	Nuclear power less than 5%.	2.1 Go to FNP-1-FRP-S.1.
2.2	Core exit T/Cs less than 1200°F.	2.2 Go to FNP-1-FRP-C.1.
2.3	Total AFW flow greater than 395 gpm or at least one SG narrow range level greater than 31%.	2.3 Go to FNP-1-FRP-H.1.
2.4	RCS cold leg temperature greater than 250°F or cooldown rate less than 100°F in last 60 minutes.	2.4 Go to FNP-1-FRP-P.1.
2.5	CTMT pressure less than 54 psig.	2.5 Go to FNP-1-FRP-Z.1.
3	**Monitor switchover criteria.**	
3.1	CST level greater than 5.3 ft.	3.1 Align AFW pumps suction to SW using FNP-1-SOP-22.0.

Step	Action/Expected Response	Response NOT Obtained

NOTE: To ensure adequate pressurizer spray, the priority for establishing RCP support conditions is 1B, 1A and then 1C.

14 **Verify RCP support conditions established.**

****

CAUTION: To prevent potential seal damage, neither seal injection nor CCW cooling should be restored to a RCP which has lost both seal injection and CCW cooling.

****

14.1 Verify No. 1 seal support conditions established.

14.1.1 Maintain seal injection flow - GREATER THAN 6 gpm.

14.1.2 Verify No. 1 seal leakoff flow - WITHIN FIGURE 1 LIMITS.

14.1.3 Verify No. 1 seal differential pressure - GREATER THAN 210 psid.

14.1 IF any No. 1 seal support condition NOT established, THEN stop associated RCP.

14.2 Verify CCW - ALIGNED.

CCW FROM
RCP THRM BARR
[] Q1P17HV3045 open
[] Q1P17HV3184 open

14.3 Check RCP thermal barrier - INTACT.

RCP
THRM BARR
CCW FLOW
HI
[] Annunciator DD2 clear

14.3 Verify CCW flow isolated.

CCW FROM
RCP THRM BARR
[] Q1P17HV3045 closed
[] Q1P17HV3184 closed

Step 14 continued on next page.

Page Completed

Step	Action/Expected Response	Response NOT Obtained
14.4	Verify at least one RCP bus ENERGIZED. [] 1A 4160 V bus [] 1B 4160 V bus [] 1C 4160 V bus	14.4 Proceed to step 15.
14.5	Check CCW to RCP oil coolers SUFFICIENT. CCW FLOW FROM RCP OIL CLRS LO [] Annunciator DD3 clear	14.5 Perform the following. 14.5.1 Verify CCW aligned. CCW TO RCP CLRS [] Q1P17MOV3052 open CCW FROM RCP OIL CLRS [] Q1P17MOV3046 open [] Q1P17MOV3182 open 14.5.2 <u>IF</u> annunciator DD3 clear, <u>THEN</u> proceed to step 14.6. <u>IF NOT</u>, stop all RCPs. 14.5.3 Proceed to step 15.
14.6	Check RCP oil level SUFFICIENT. RCP 1A(1B,1C) BRG UPPER/LOWER OIL RES LO LVL [] Annunciator HH1 clear [] Annunciator HH2 clear [] Annunciator HH3 clear	14.6 <u>IF</u> any RCP oil level <u>NOT</u> sufficient, <u>THEN</u> stop associated RCP.

_____Page Completed

Step	Action/Expected Response	Response NOT Obtained
	NOTE: To ensure adequate pressurizer spray, the priority for operating RCPs is 1B, 1A and then 1C.	
15	**Check at least one RCP - STARTED.**	15 Perform one of the following. • IF support conditions exist to start an RCP, THEN start only one RCP. a) Start bearing oil lift pump. RCP OIL LIFT PUMP [] 1B(1A,1C) b) Check oil lift pressure indicating light LIT. c) Start RCP. RCP [] 1B(1A,1C) d) WHEN RCP has operated for one minute, THEN stop bearing oil lift pump. RCP OIL LIFT PUMP [] 1B(1A,1C) OR

Step 15 continued on next page.

Page Completed

Step	Action/Expected Response	Response NOT Obtained
		• IF support conditions do NOT exist, THEN verify adequate natural circulation. a) Check SG pressure stable or falling. b) Check SUB COOLED MARGIN MONITOR indication greater than 16°F subcooled in CETC mode. c) Check RCS hot leg temperatures stable or falling. RCS HOT LEG TEMP [] TR 413 d) Check core exit T/Cs stable or falling. e) IF natural circulation NOT adequate, THEN dump steam at a faster rate. f) Begin taking natural circulation logs.

__Page Completed

Step	Action/Expected Response	Response NOT Obtained
___16	**Maintain stable plant conditions.** • Maintain pressurizer pressure - 2220-2250 psig. • Pressurizer level - 19-24%. • Steam generator narrow range levels - 61-69%. • IF any RCP running, THEN maintain RCS average temperature - 545-550°F. TAVG 1A(1B,1C) RCS LOOP [] TI 412D [] TI 422D [] TI 432D OR • IF no RCP running, THEN maintain RCS cold leg temperature - 547°F. RCS COLD LEG TEMP RECORDER [] TR 410	

____Page Completed

Step	Action/Expected Response	Response NOT Obtained

****

CAUTION: IF a DG is already operating above its continuous load rating, THEN additional manual loads should not be added. Unanticipated plant emergency conditions may dictate the need to load the emergency diesel generators above the continuous load rating limit (i.e. 2.85 MW for small DGs, 4.075 MW for large DGs). Under these circumstances, diesel generator loading may be raised not to exceed the 2000 hour load rating limit (i.e. 3.1 MW for small DGs, 4.353 MW for large DGs). Diesel loading should be reduced within the diesel generator continuous load rating limit as soon as plant conditions allow.

****

17 Check diesel generators.

17.1 Monitor any loaded diesel generator for proper voltage, frequency and load.

17.2 WHEN offsite power available, THEN realign emergency buses to offsite power using FNP-0-SOP-38.0, DIESEL GENERATORS.

Step 17 continued on next page.

____Page Completed

Step	Action/Expected Response	Response NOT Obtained
17.3	Secure any unloaded diesel generators as follows.	

NOTE: Steps 17.3.1 through 17.3.7 should be performed for only one diesel generator at a time.

17.3.1	Place mode selector switch for unloaded diesel generator in MODE 2.	
17.3.2	Reset unloaded diesel generator emergency start signal by depressing the DIESEL EMERG START RESET pushbutton.	
17.3.3	Verify unloaded diesel generator frequency - ADJUSTED TO 60 Hz.	
17.3.4	Verify unloaded diesel generator voltage - ADJUSTED TO 4.15 kV.	
17.3.5	Stop unloaded diesel generator.	
17.3.6	Place mode selector switch for stopped diesel generator in MODE 1.	
17.3.7	Verify DIESEL READY AUTO ST light - LIT.	

Step 17 continued on next page.

Page Completed

Step	Action/Expected Response	Response NOT Obtained
	17.4 WHEN emergency bus(es) re-energized from offsite power, THEN perform the following for affected bus(es):	
	17.4.1 Locally reset the loss of voltage indicating lamp on the B1F (B1G) sequencer auxiliary panel.	
	17.4.2 At the EPB for the B1F (B1G) sequencer, push the LAMP RESET pushbuttons.	
___18	**Determine controlling procedure.**	
	18.1 Check at least one RCP - STARTED.	18.1 Perform the following.
		18.1.1 Notify Chemistry to secure the zinc addition system (ZAS).
		18.1.2 IF cooldown required, THEN go to FNP-1-ESP-0.2, NATURAL CIRCULATION COOLDOWN TO PREVENT REACTOR VESSEL HEAD STEAM VOIDING.
	18.2 Go to FNP-1-UOP-2.1, SHUTDOWN OF UNIT FROM MINIMUM LOAD TO HOT STANDBY.	

-END-

FIGURE 1

NO. 1 SEAL NORMAL OPERATING RANGE

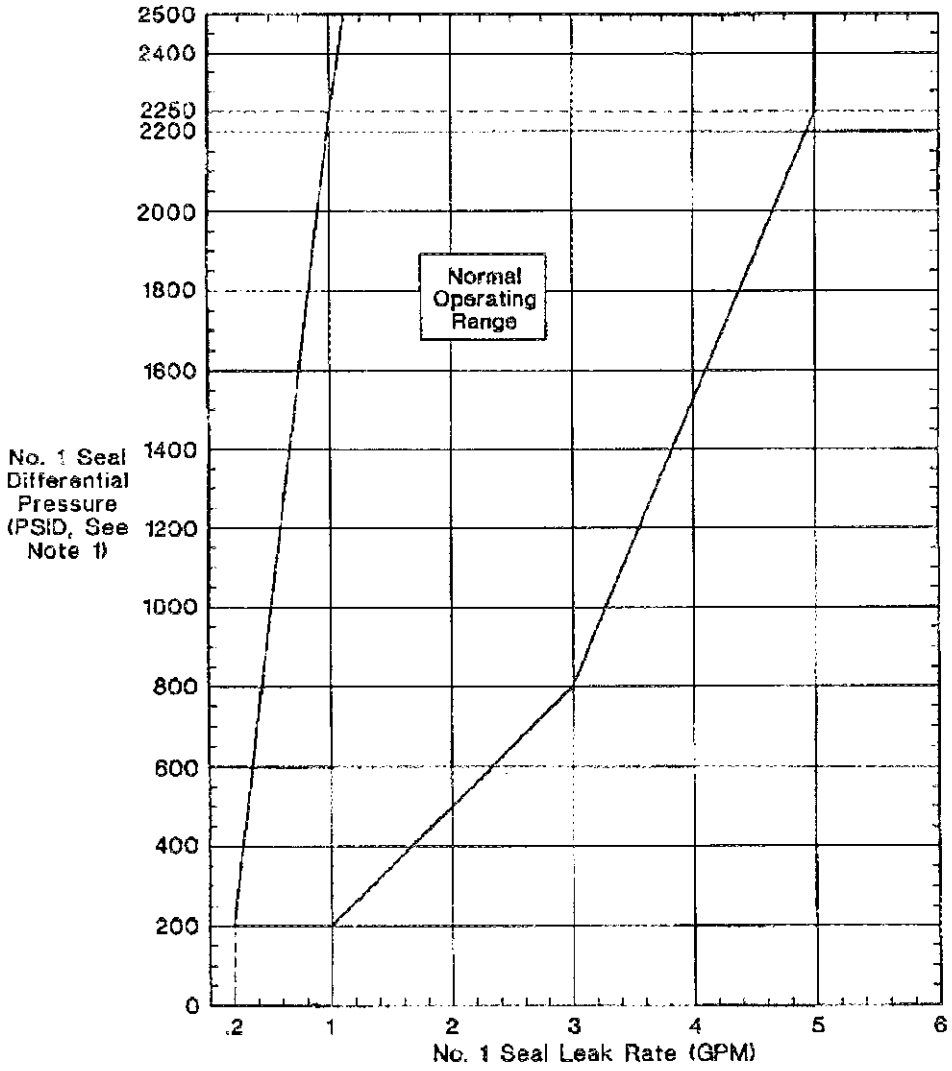

Note 1: For No. 1 Seal differential pressures greater than 400 psid, use RCS pressure in psig.

FIGURE 2

RCP PRESSURE-TEMPERATURE OPERATING LIMITS

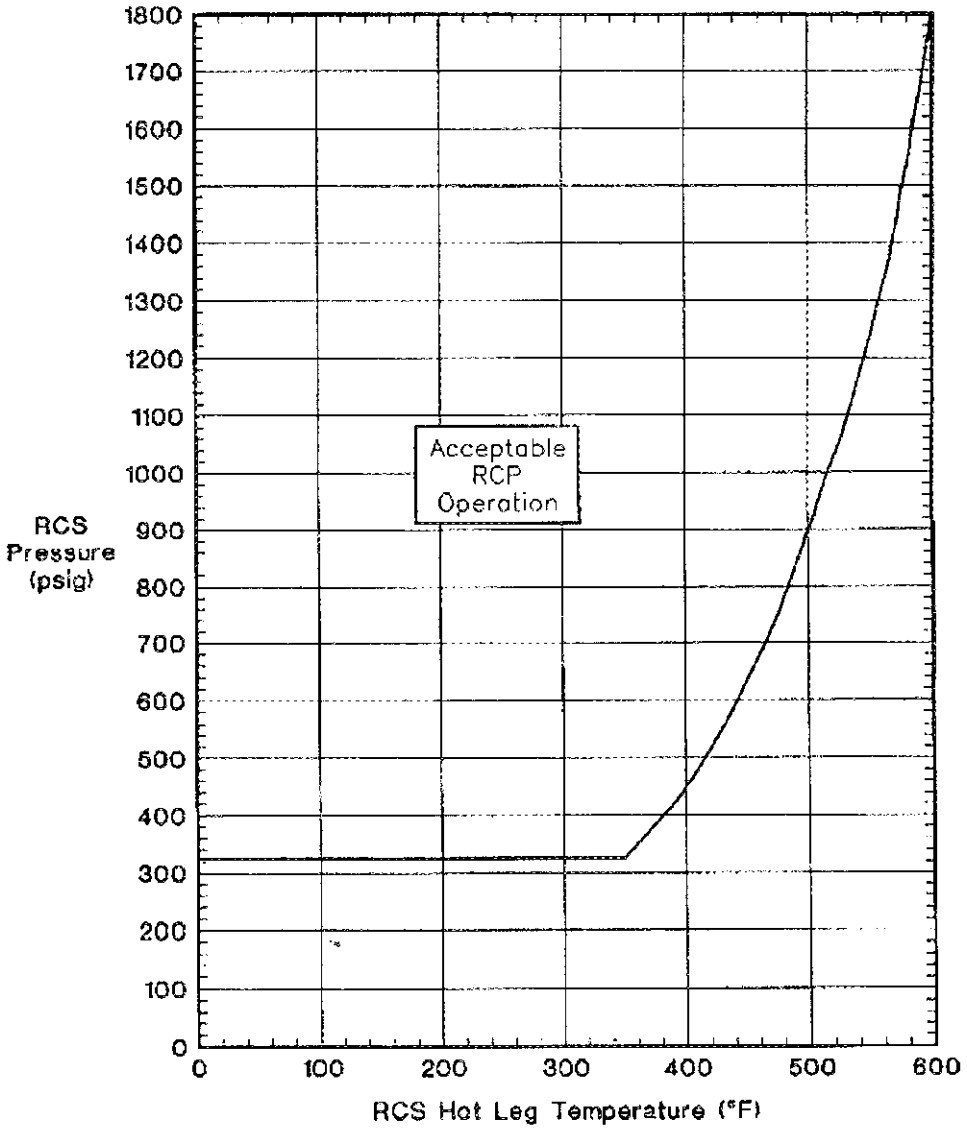

74. W/E11G2.4.20 001/1/1/ECP-1.1/C/A 3.3/4.0/NEW/FA011005/RO/

Unit 1 had completed ESP-1.3, Transfer to Cold Leg Recirculation, and transferred back to EEP-1.0, Loss of Reactor or Secondary Coolant. Both RHR pumps have oscillating amps, discharge pressure and flow. Both CS pumps have oscillating discharge flow. ECCS sump level is reading 3.8 feet.

ECP-1.1, Loss of Emergency Coolant Recirculation, has been entered.

Which one of the following is the action that needs to be taken and the most likely cause of the problem?

A. Secure one train of RHR pumps, HHSI pumps and CS pumps since the flow rate is too high to support both trains running with all sump screens clogged.

B. Secure one train of RHR and CS pumps since the flow rate is too high to support both trains running with all sump screens clogged.

C. Secure Both RHR pumps, HHSI pumps and CS pumps since insufficient NPSH or vortexing may exist due to the low sump level.

D. Secure Both RHR and CS pumps since insufficient NPSH or vortexing may exist due to the low sump level.

A. Incorrect - Securing one train will not correct the problem and since the sump suctions are located so far from each other this will not be a common cause and is not MOST likely the problem. One train being secured will not decrease the flowrate for the other train and will not correct the problem.

B. Incorrect - see above for summary. If this were the problem, leaving the HHSI pump running and securing the RHR pumps would destroy the HHSI pumps. Not the correct action to take.

C. Correct - **Secure Both RHR pumps, HHSI pumps and CS pumps since insufficient NPSH or vortexing may exist due to the low sump level.**
Securing all the pumps taking a suction on the ECCS sump would be the correct action to prevent damage to the pump. The ECCS sump level could be raised and correct the problem. The Caution and Note of ECP-1.1 say the pumps should be secured if the suction is lost and the intent of the Note is to point out that if both trains are affected, then the problem is most likely a common problem (ie. sump level) which the note alludes to by giving the 4.8 feet level.

D. Incorrect - The operator would not leave the HHSI pumps running due to the lineup. The RHR pumps are now supplying the HHSI pumps with their water source and if they are secured, the HHSI pumps will run dry and damage will occur.

CAUTION: SI or spray pump damage will occur if suction is lost and the pump is not secured.

NOTE: IF both trains of RHR have lost emergency coolant recirculation capability AND ECCS sump level is approximately 4.8 ft or less, THEN the loss may be due to insufficient NPSH or air entrainment (vortexing) due to the low ECCS sump level.

W/E11G2.4.20 Loss of Emergency Coolant Recirc - Knowledge of operational implications of EOP warnings, cautions, and notes.

State the basis for all cautions, notes, and actions associated with ECP-1.1 (OPS52532D03).

Step	Action/Expected Response	Response NOT Obtained

****

CAUTION: SI or spray pump damage will occur if suction is lost and the pump is not secured.

****

NOTE: IF both trains of RHR have lost emergency coolant recirculation capability AND ECCS sump level is approximately 4.8 ft or less, THEN the loss may be due to insufficient NPSH or air entrainment (vortexing) due to the low ECCS sump level.

___ 1	**WHEN emergency coolant recirculation capability is restored, THEN go to procedure and step in effect.**	
___ 2	**Check cold leg recirculation equipment - AVAILABLE.** 2.1 Train A equipment available: • 1A RHR Pump • CTMT SUMP TO 1A RHR PUMP Q1E11MOV8811A • CTMT SUMP TO 1A RHR PUMP Q1E11MOV8812A • 1A RHR HX TO CHG PUMP SUCT Q1E11MOV8706A • CCW TO 1A RHR HX Q1P17MOV3185A OR 2.2 Train B equipment available: • 1B RHR Pump • CTMT SUMP TO 1B RHR PUMP Q1E11MOV8811B • CTMT SUMP TO 1B RHR PUMP Q1E11MOV8812B • 1B RHR HX TO CHG PUMP SUCT Q1E11MOV8706B • CCW TO 1B RHR HX Q1P17MOV3185B	2 Perform the following. a) Continue attempts to restore at least one train of recirculation equipment. b) Proceed to Step 3.

___Page Completed

consider the Emergency Implementation Procedure (EIP) notification requirements any time emergency procedures are exited. Reporting requirements exist for any event or condition that results in manual or automatic actuation of any emergency safety feature (ESF), including the reactor protection system (RPS).

Depending on the initiating event(s), ESF actuations may require declaration of any of the four emergency classifications or no declaration at all. EIP-9 must be studied by the OSS/ED. The study is performed to determine if an emergency declaration is required and, the level of the declaration required for protection of the public.

DETAILED DESCRIPTION

ECP-1.1 Step Description

The following is a synopsis of the steps, notes and cautions and may not necessarily match the order that the procedure addresses these items. Although this section will try to place the step as close to the order as the procedure sequences the step.

Symptoms or Entry Conditions

This procedure is entered from EEP-1, ESP-1.3, or ECP-1.2 when cold leg recirculation capability cannot be verified, when at least one flow path from the containment sumps cannot be established or maintained or when a LOCA outside containment cannot be isolated (respectively).

Steps, Notes, and Cautions

The discussion that follows contains step description information as well as discussion on notes and cautions found in the procedure.

When Emergency Coolant Recirculation Capability is Restored Then Go to the Procedure and Step in Effect

The first instruction for the operator is to try to restore the equipment needed for ECR in order to avoid performing any extreme recovery actions. Attempts to restore ECR should, therefore, be continued throughout the procedure. If ECR capability is restored, the operator is instructed to return to the guideline in effect for further recovery actions.

A caution prior to this step informs the operator that damage to a pump(s) will occur if suction is lost and the pump(s) is not secured. The note prior to the step points out that if both trains of RHR have lost ECR capability, the cause is most likely a common cause. If the ECCS sump level is approximately 4.8 ft or less, then the loss may be due to insufficient NPSH or air entrainment (vortexing) due to the low ECCS sump level.

Check Cold Leg Recirculation Equipment Available

Train A and Train B recirculation pumps and valves are checked to determine whether or not at least one train of components is available. If at least one train of recirculation equipment is available and recirculation capability is determined to be restored, then transition to the procedure and step in effect is performed. If at least one train of recirculation equipment is not available, then the operator continues efforts to restore at least one train of equipment and continues with the procedure.

Verify SI RESET

The purpose of this step is to utilize the reset function, which is part of the safeguards actuation logic, so that valves can be realigned when needed.

Reset Containment Sump to RHR Valve Switches

At this point in the procedure, this action is taken to prevent inadvertent loss of RWST inventory due to automatic switchover. This function actuates following a SI when RWST low-low level is reached and automatically opens the SI pump containment sump suction valves.

Makeup to the RWST as necessary

Inventory in the RWST is a concern for recovery from a loss of ECR capability. Makeup is added to the RWST to extend the time the SI pumps and containment spray pumps (if operating) can take suction from the RWST and provide core cooling to the RCS. If the normal method of makeup is not available, then the TSC is consulted to determine alternate methods of makeup.

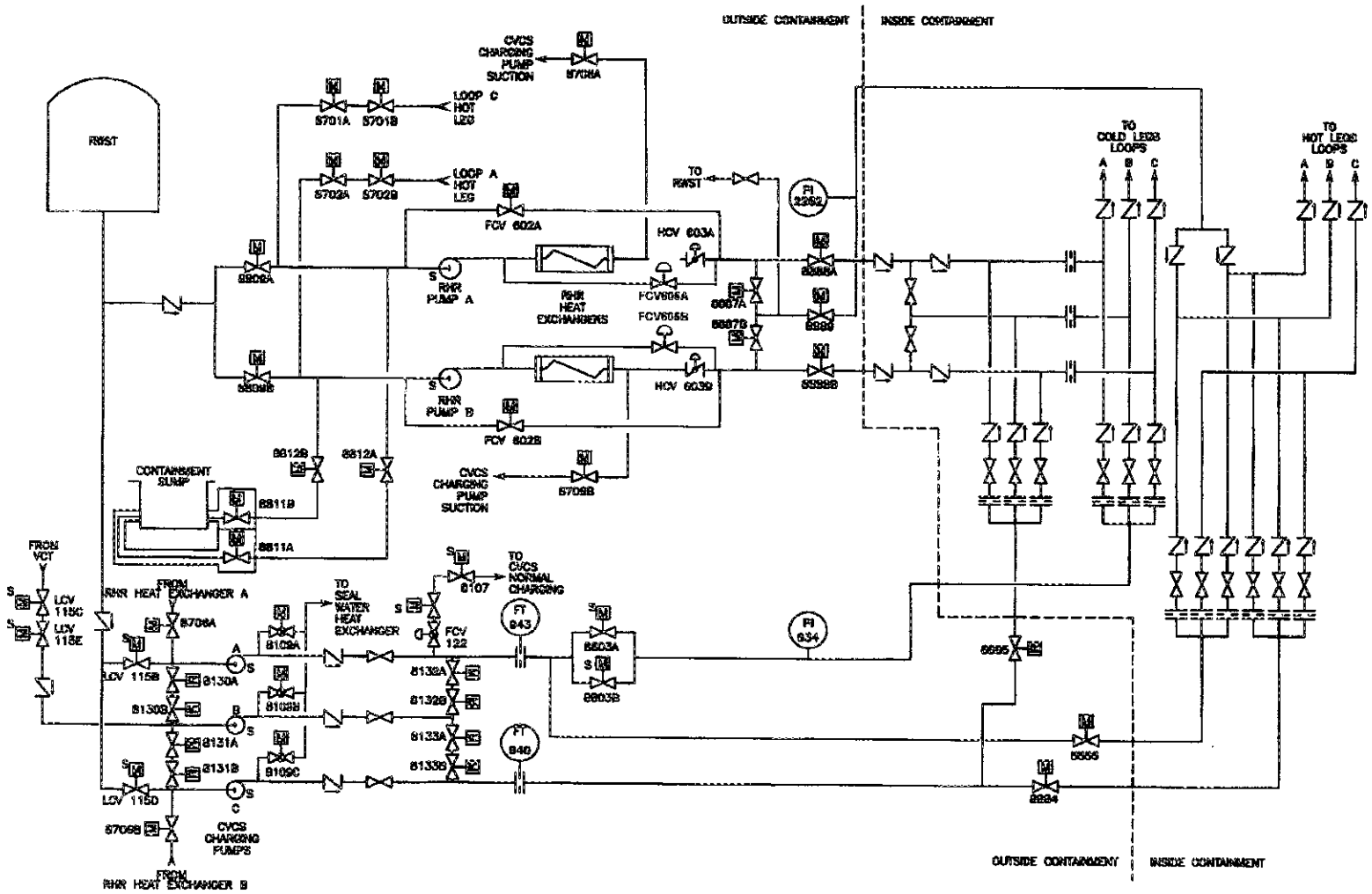

Emergency Core Cooling System

Figure 4

Step	Action/Expected Response	Response NOT Obtained
14	Begin evaluation of plant status.	

NOTE: Unless a known problem exists with components required for cold leg recirculation or their power supplies, it is assumed cold leg recirculation capability is available. Transition to FNP-1-ECP-1.1, LOSS OF EMERGENCY COOLANT RECIRCULATION, however, should be made upon discovery of inability to establish at least one train of recirculation.

14.1 Verify cold leg recirculation capability - AVAILABLE.

14.1.1 Train A equipment available:

- 1A RHR Pump
- CTMT SUMP TO 1A RHR PUMP Q1E11MOV8811A
- 1A RHR HX TO CHG PUMP SUCT Q1E11MOV8706A
- CCW TO 1A RHR HX Q1P17MOV3185A

OR

14.1.2 Train B equipment available:

- 1B RHR Pump
- CTMT SUMP TO 1B RHR PUMP Q1E11MOV8811B
- 1B RHR HX TO CHG PUMP SUCT Q1E11MOV8706B
- CCW TO 1B RHR HX Q1P17MOV3185B

14.1 IF cold leg recirculation capability can NOT be verified, THEN go to FNP-1-ECP-1.1, LOSS OF EMERGENCY COOLANT RECIRCULATION.

14.2 Begin taking ECCS logs.

Step 14 continued on next page.

_____Page Completed

Step	Action/Expected Response	Response NOT Obtained
___ 5	**Verify CCW flow to RHR heat exchangers - ESTABLISHED.** CCW TO 1A(1B) RHR HX [] Q1P17MOV3185A open [] Q1P17MOV3185B open	
___ 6	**Establish only one CHG PUMP in each train - RUNNING.** [] A Train (1A or 1B) amps > 0 [] B Train (1C or 1B) amps > 0	

****

CAUTION: Pump damage will occur if a charging pump or RHR pump is started in a train in which a flow path from the containment sump to the RCS cannot be established or maintained.

****

7	**Align ECCS for cold leg recirculation.**	
7.1	Check containment sump level - GREATER THAN 2.4 ft(3.0 ft). CTMT SUMP LVL [] LI 3594A POST ACCIDENT CTMT WTR LVL [] LR 3594B	7.1 IF both containment sump level indications less than 2.4 ft(3.0 ft), THEN go to FNP-1-ECP-1.1, LOSS OF EMERGENCY COOLANT RECIRCULATION.
7.2	Verify recirculation valve disconnects - CLOSED USING ATTACHMENT 1.	
7.3	Stop both RHR PUMPs.	
7.4	Close RWST TO 1A RHR PUMP Q1E11MOV8809A.	7.4 Perform the following. 7.4.1 Stop the running A train CHG PUMP. 7.4.2 Proceed to step 7.9.

Step 7 continued on next page.

___Page Completed

Step	Action/Expected Response	Response NOT Obtained

7.25 Align charging pump discharge header isolation valves based on 1B charging pump status.

1B Charging Pump Status	Aligned As A Train pump	Aligned As B Train pump	Not Available
CHG PUMP DISCH HDR ISO Q1E21MOV	[] 8132A open [] 8132B open [] 8133A closed [] 8133B closed	[] 8132A closed [] 8132B closed [] 8133A open [] 8133B open	[] 8132A closed [] 8132B closed [] 8133A closed [] 8133B closed

7.26 Verify SI flow - STABLE.

A TRN
HHSI FLOW
[] FI 943

HHSI
B TRN RECIRC
FLOW
[] FI 940

1A(1B)
RHR HDR
FLOW
[] FI 605A
[] FI 605B

7.26 IF at least one train of flow from the containment sump to the RCS can NOT be established or maintained, THEN go to FNP-1-ECP-1.1, LOSS OF EMERGENCY COOLANT RECIRCULATION.

___ 8 **Check containment spray - IN OPERATION.**

8 Go to procedure and step in effect.

___Page Completed

75. W/E14EA1.1 001/1/2/LBLOCA/C/A 3.7/3.7/BANK/FA011005/RO/

A dual Unit Loss of Site Power (LOSP) has occurred. The following conditions also exist 3 minutes into the LOSP:

- Unit 2 has had a spurious SI.
- 1B Diesel Generator has tripped.

Five minutes later Unit 1 has a Large Break LOCA. Which one of the following is a load that is required to be started in this condition that will have to be manually started by the OATC and the reason?

A. Service Water Pumps; Unit 1 'A' Train ESS sequencer will not run for this event.

B. Containment Spray Pumps; Unit 1 'A' Train ESS sequencer will not run for this event.

C. Control Room Air Conditioners; Unit 1 'A' Train ESS sequencer will not energize MCC 1F for this event.

D. 1A Air Compressor; Unit 1 'A' Train ESS sequencer will not energize 1C Air Compressor for this event.

Unit 2 will get 1-2A DG and it has the 2B DG running. All ESF loads will be running. The subsequent SI on unit 1 with no B Train power will only run the LOSP sequencer. The SI sequencer will not run due to the fact that the 1C DG is on that bus and an LOSP signal is in. The only loads that do not start when the LOSP sequencer runs that would run off the SI sequencer is the Ctmt spray pumps, RHR pumps, Rx cavity H2 dilution fans. The operator is required to start the CS pumps. They are required to be operating w/i 55 seconds of the CS actuation signal which in this case is a few minutes after the LOCA.

A. Incorrect - Service Water pumps come off both the ESS and LOSP sequencer so they will be running. The steps on the SW pumps are different than other pumps in that 1 SW pump starts at step 2 and 3 of the LOSP seq. and step 3 of the ESS seq. The second part of this is a correct statement in that the ESS seq. will not run.

B. Correct - **Containment Spray Pumps; Unit 1 'A' Train ESS sequencer will not run for this event.**

page 13

Containment spray is required to deliver flow to the spray nozzles within 55 seconds from the generation of the containment spray actuation signal. To accomplish this, the containment spray pumps must be assigned to step 2 of the load sequencers. An LOSP is assumed to occur coincident with the generation of the containment spray actuation signal, so that time must be allowed for the diesel generator to start, themotor-operated valves to open, and flow to be delivered to the spray nozzles. A small time margin is incorporated to account for the closure of the pump breakers and any inaccuracies of the assumed times.

page 12

Upon receipt of the LOSP and SI actuation signals, all diesel generators would start and energize their respective emergency bus or buses. The 1-2A diesel generator aligns to the A train of the unit that received the SI first. The other A train diesel generator, the 1C diesel, aligns to the other unit's A train. Since the *1-2A diesel generator is the only A train diesel generator with the capacity to operate all required ESS loads,* the A train ESS sequencer memories *will only allow the unit with the 1-2A diesel generator to run its ESS sequencer.* The unit with the 1C diesel generator will run its A train LOSP sequencer. The train dedicated 1B and 2B diesel generators align to their respective B train buses. Since both B train dedicated diesel generators have the capacity to operate all required ESS loads, both B train ESS sequencers run.

C. Incorrect - the CR A/C will be supplied power from F MCC which is not load shed but does have a 60 sec TD that allows for the seq. to run prior to allowing the CRAC to start. This is a relatively new design change.

C.5.9 CONTROL ROOM AIR CONDITIONER

Compressor units and blower units are fed from MCCs F and G.
Control Room temperature must be maintained at some reasonable level *but it is not critical that the air conditioner system start operating during initial diesel loading.* Therefore, a *time delay relay prevents the control room air conditioner system from operating until one minute after the diesel breaker closes.* This places initial control room air conditioner start (under diesel power), **after the final sequence step**, minimizing voltage dips during sequencing.

D. Incorrect - The C Air comp. will be sequenced on by both sequencers and will be running. If for some reason the 1C AC was not powered up, then the procedure would ahve the 1A AC placed in service manually.

W/E14 High Containment Pressure
EA1.1 - Ability to operate and / or monitor the following as they apply to the (High Containment Pressure) : Components, and functions of control and safety systems, including instrumentation, signals, interlocks, failure modes, and automatic and manual features. RO 3.7

Evaluate plant conditions to determine if any system components need to be operated while performing FRP-Z.1/Z.2/Z.3. (OPS52533M06)

Evaluate abnormal plant or equipment conditions associated with the Diesel Generator Sequencers System and determine the local actions needed to mitigate the consequence of the abnormality (OPS40102D12).

Phase A Containment Isolation

This step directs the operator to isolate the non-essential containment penetrations to prevent the release of radioactive materials from containment. The operator ensures that phase "A" containment isolation actuated by verifying that monitor light box 2 (MLB-2) 1-1 and 11-1 are lit, and all MLB-2 lights are lit. If all MLB-2 lights are not lit, the operator is directed to verify Phase "A" containment isolation alignment using an attachment. It should be noted that operator actions in other procedures might have resulted in deliberate actions to defeat containment isolation of specific fluid lines. Therefore, if any lines are necessary for plant recovery, they may not be required to be isolated per the attachment.

Containment Ventilation Isolation

(Figures 3 & 4)

Non-essential ventilation penetrations are isolated (containment purge and minipurge dampers are closed) to prevent potential release of radioactive materials from containment. Due to the relative size of the containment purge/minipurge openings, they would have a severe impact on containment integrity if they were not closed. The deenergization of the minipurge fan closes the outside suction and discharge dampers, thus providing an additional barrier against release.

Containment Spray

A caution warns the operator that the operation of the containment spray pumps as directed in ECP-1.1 takes precedence over the guidance in this step of this procedure. This procedure specifies maximum available heat removal system operability in order to reduce containment pressure. ECP-1.1 uses less restrictive criteria, which permit reduced spray pump operation depending on refueling water storage tank (RWST) level, containment pressure, and number of emergency fan coolers operating. The less restrictive criteria for containment spray operation are used in ECP-1.1 since recirculation flow to the reactor coolant system (RCS) is not available, and it is very important to conserve RWST water, if possible, by stopping containment spray pumps.

This step directs the operator to verify containment spray since this procedure is entered either when containment pressure exceeds Hi-3 (containment spray initiation) or when containment

pressure exceeds containment design pressure. Containment spray is required and should be automatically initiated to mitigate the containment pressure transient. Containment isolation Phase B valves are also closed to isolate potential radioactive release paths from containment. Therefore, the operator verifies both trains of phase B containment isolation are actuated, and MLB-3 1-1 and 6-1 are lit. Since component cooling water to the reactor coolant pump (RCP) motor oil coolers is isolated on a Phase B signal, the RCPs are tripped to prevent overheating the motors. All MLB-3 lights are checked; if they are not all lit, the operator verifies that containment isolation Phase B valves are closed per an attachment. Containment spray flow is verified, or the operator ensures that the containment spray system valves are in the proper emergency alignment.

Containment Fan Cooler Alignment

This step instructs the operator to verify that all containment fan coolers are operating in the emergency mode. If the fan coolers are not running, the operator should manually start the fan coolers.

Containment fan coolers provide cooling of the containment atmosphere to limit containment pressure, temperature, and humidity during accident conditions. On SI, the cooler high-speed fan breakers open, and the slow speed fan breakers close to prevent overloading the fan motor. Fan motor overload might occur due to excessive work being done by the motor if the containment atmosphere is heavily laden with moisture. In addition to the normal 800 gpm service water (SW) supply to each cooler train, the emergency SW supply valves to the coolers open on SI to increase SW flow to each cooler train to approximately 2000 gpm. These automatic actions increase the containment cooling/pressure reducing capability of the coolers such that three coolers are equivalent to one spray train.

Main Steam Line Isolation and Bypass Valves Closed

All main steam lines should have isolated when the Hi-2 setpoint was reached in order to minimize the consequences of and/or terminate the mass and energy releases associated with a high energy secondary line break. If it is determined that the main steam isolation valves (MSIVs) have not closed automatically as determined by evaluation of appropriate indications and trip status light

box (TSLB) bistables, then response not obtained (RNO) actions are specified to ensure closure of the valves. If difficulty is encountered closing the MSIV and associated bypass valves from the MCB, the RNO column references use of the MSIV test handswitches to attempt valve movement of the stuck MSIV off the fully open seat. Subsequent to successful performance of the operator actions, the MSIVs may show dual valve position indication, especially on a steam generator (SG) that has a potential secondary fault upstream of the suspect MSIVs. If steam header pressure as indicated on PI-464 is higher than the suspect SG pressure, then the MSIVs are relieving trapped steam in the main steam headers back to the SG, and the MSIVs can be considered closed.

Feed Flow Isolation to any SG

A SG that has a failure in its secondary pressure boundary is considered faulted. An uncontrolled SG pressure decrease or a completely depressurized (i.e., $\leq$ 50 psig, which is near containment or atmospheric pressure) SG indicates failure of the secondary pressure boundary. Uncontrolled means not under the control of the operator and incapable of being controlled by the operator using available equipment. Isolation of a faulted SG may have already been performed using EEP-2, Faulted Steam Generator Isolation.

In this step, the SG main feed stop valves (MOV-3232A, B, or C) on all faulted SG(s) are closed. If feed flow to a SG is isolated, and the SG is allowed to dry out, subsequent reinitiation of feed flow to the SG could create significant thermal stress conditions on SG components. If all SG's are faulted, by maintaining a minimum verifiable feed flow to the SG allows the components to remain in a "wet" condition, thereby minimizing any thermal shock effects if feed flow is increased.

Go to Procedure and Step in Effect

Now that the procedure steps have been completed or are in progress, the operator should continue plant recovery operations by returning to the guideline and step that was in effect at the time FRP-Z.1 was entered. It should be noted that, once all the actions of this procedure are completed and the operator has returned to the procedure and step-in-effect, this particular containment function may not be restored, and the containment status tree may continue to display a

The first load group, the ESS sequencer group, will be restored whenever an SIAS occurs. This load group consists of loads supplied from buses F, G, K, and L. The ESS sequencer receives input from the memory circuit. If an SI exists and off-site power is available to the emergency buses, the ESS sequencer will start all ESS loads at one time. If off-site power is not available, the ESS sequencer will start the ESS loads sequentially.

The second load group, the LOSP sequencer group, will be restarted sequentially whenever an LOSP condition exists without an SI. The little diesel (1C) river water sequencers also may be considered as LOSP sequencers. The river water sequencers start the 1C diesel generator and re-energize its associated emergency bus, making power available to start river water pumps manually, as needed, to maintain service water pond level. No river water pumps are sequenced automatically by the sequencers.

The ESS and LOSP loads are divided between the two emergency bus trains for each unit in a balanced and redundant manner. Due to the load arrangement, only one train per unit needs to be operable to supply the loads required for the safe shutdown of the unit. The following chart denotes the loads started on each step for both an ESS and LOSP sequencer signal:

Step	ESS Sequencer Loads	LOSP Sequencer Loads
1	Charging pump	Charging pump Rx cavity cooling fan
2	RHR pump, CTMT spray pump	Service water pump, CRDM cooler fan
3	Service water pumps	Service water pump
4	CCW pump, CTMT cooler	CCW pump, CTMT cooler
5	MDAFW pump, Rx cavity H2 dilution fan	MDAFW pump
6	Battery charger Air compressor	Battery charger Air compressor

for this accident case. Let's examine why our system design cannot automatically provide a single train of ESS loads to both units under this highly improbable accident situation.

Upon receipt of the LOSP and SI actuation signals, all diesel generators would start and energize their respective emergency bus or buses. The 1-2A diesel generator aligns to the A train of the unit that received the SI first. The other A train diesel generator, the 1C diesel, aligns to the other unit's A train. Since the 1-2A diesel generator is the only A train diesel generator with the capacity to operate all required ESS loads, the A train ESS sequencer memories will only allow the unit with the 1-2A diesel generator to run its ESS sequencer. The unit with the 1C diesel generator will run its A train LOSP sequencer. The train dedicated 1B and 2B diesel generators align to their respective B train buses. Since both B train dedicated diesel generators have the capacity to operate all required ESS loads, both B train ESS sequencers run.

Looking back and summarizing what has taken place, it would appear that our system design does show protection for this case of dual unit LOSP and dual unit SI. Both units have at least one train of ESS loads, and one of the two units has two trains of ESS loads operating.

The one problem that we have overlooked in our study is the inclusion of the worst case single equipment failure. In the present accident situation, the worst case single equipment failure would be the failure of the B train diesel generator associated with the unit that has only one train of ESS loads operating. This is the assumption that our safety analysis makes. As you can see, this assumption places that unit in a situation where not all the ESS loads have automatically started. Some required ESS loads would have to be started manually by the operators. As was previously mentioned, the diesel generator and sequencer design provides the necessary electrical power and automatic start of ESS loads for the postulated worst case situation--a dual unit LOSP with a simultaneous SI on only one unit.

ESS Load Sequencer

The design basis accident analysis of the plant also forms the basis for the loading requirements of the emergency buses as a function of time. The essential ESS loads have been grouped in six steps. During an accident without an LOSP, the ESS sequencer will deliver a simultaneous closing signal to all load circuit breakers in each step. The two-second duration

closing signal ensures sufficient time for proper closing action of the breakers, thus providing the required electrical power to the preselected ESS loads in a timely manner.

During an accident with an LOSP, each loading step will be energized by the diesel generator in a predetermined sequence. Variable timers determine the time interval between each step. The timer setpoints were chosen with two major considerations involved. The first consideration deals with maintaining the diesel generator frequency and voltage within tolerance. The second consideration involves the starting of the various engineered safety features within required safety analysis response time values.

When starting a large electrical load on the diesel generator, the diesel generator's speed will drop, causing the initial emergency bus frequency and voltage to drop. The time intervals between each step must be sufficient to allow the starting current to decay before proceeding with the next step. The diesel generator frequency and voltage should not decrease to less than 95 percent of nominal frequency (57 Hz) and 75 percent of nominal voltage (3120 volts AC). In addition, the diesel generator should be restored to within two percent of nominal frequency (58.8 Hz) and 10 percent of nominal voltage (3745 volts AC) within two seconds of a sequence action.

The required response time values of the various emergency safety features are based on the accident analysis of the plant for the design based accident and the diesel generator capability. The particular sequencer step chosen for each emergency safety feature load was determined with the above in mind and with the following basic considerations:

1. The SI system is required to begin supplying injection flow to the reactor coolant system within 22 seconds from the moment the accident occurs. To accomplish this, the charging pumps must be assigned to step 1 of the load sequencers. This allows time for the diesel generator to start and the motor-operated valves to open, leaving a small margin for the generation of the SI.
2. Containment spray is required to deliver flow to the spray nozzles within 55 seconds from the generation of the containment spray actuation signal. To accomplish this, the containment spray pumps must be assigned to step 2 of the load sequencers. An LOSP is assumed to occur coincident with the generation of the containment spray actuation signal, so that time must be allowed for the diesel generator to start, the

motor-operated valves to open, and flow to be delivered to the spray nozzles. A small time margin is incorporated to account for the closure of the pump breakers and any inaccuracies of the assumed times.

3. Containment coolers are required to start within 27.4 seconds following an LOSP. However, the service water pumps must be running prior to starting the containment coolers. The service water pumps have been assigned to step 3, and the containment coolers have been assigned to step 4 of the load sequencers. The sequencer step in which the containment fan coolers must be started is determined by a load sequence time interval of five seconds between any two subsequent steps, diesel start time, fan cooler breaker closure time, and fan acceleration time.

These considerations, together with the diesel generator frequency and voltage requirements, led to the selection of the load sequence time interval of five seconds. Evaluation of the load sequencers and the diesel starting time indicates that neither a diesel generator starting time of 12 seconds nor the load sequence time interval of five seconds can be increased without exceeding the required response time values of the various engineered safety features and the diesel generator capability.

LOSP Load Sequencers

If off-site power becomes unavailable, a reactor trip will occur. The loads required to safely shut down the unit after a reactor trip will be started in a predetermined sequence by the big diesel LOSP sequencers. The loads have been divided into six steps, with five-second time intervals between steps. The time intervals are based on the diesel generator capabilities. If an SI is received subsequent to an LOSP condition, the LOSP sequencer will stop where it is, and the ESS sequencer will start at step one to run those ESF loads not already started by the LOSP sequencer. This could lead to an emergency diesel generator being above its continuous load rating because all the LOSP and ESS loads will be running. The major ESS loads that would not already be running would be the RHR pumps and, possibly, containment spray pumps.

when offsite power is available, this switch is bypassed in order to allow both containment coolers in each train to receive start signal from the ESS loading sequencer. The bypass signal is provided by a relay that indicates both offsite power available and SI (Reference 6.7.082).

C.5.3 REACTOR CAVITY H_2 DILUTION FANS

The reactor cavity H_2 dilution fan for Unit 1 is a 600 V LC load, not an MCC load, but it is still considered a miscellaneous load. Because it is on a load center, it receives a shedding signal from the load shedding portion of the sequencer and it receives a closing signal in step 5 from the ESS sequencer. However, the fan will not come on immediately after receiving its closing signal due to a five minute time delay pickup relay in the starting circuit. For Unit 2, the fan is on an MCC so it is shed automatically without a load shedding signal. As in Unit 1, the fan has a five minute time delay before it starts. It is the only miscellaneous load that receives a start signal from the ESS sequencer.

C.5.4 REACTOR CAVITY COOLING FANS

There are two fans per unit, one per train, giving a total of four reactor cavity cooling fans. They are energized by MCC's; therefore, they are shed automatically without receiving shedding signals from the load shedding portion of the sequencers. However, they receive start signal from the LOSP sequencers in step 1. They are the only miscellaneous loads that receive start signals from the LOSP sequencer.

C.5.5 STATION AIR COMPRESSOR 1C

Station Air Compressor 1C is a Unit 1, non-Class 1E load that is sequenced onto the Train A diesel generators from step 6 of either the Bus 1F LOSP or the ESS sequencer. This compressor provides a source of instrument air to aid in the recovery from transients and reduces the time required to restart the plant after LOSP, LOSP/SI and SBO events. This is not a design basis requirement.

C.5.6 LIGHTING TRANSFORMER 1B

Lighting Transformer 1B is a Unit 1, non-Class 1E load on the emergency section of 600v Load Center 1A. It is not load shed from the bus via undervoltage relays. When the emergency section of the load center is sequenced onto the Train A diesel generators from step 6 of either the Bus 1F LOSP or ESS sequencer, this load is energized. This transformer provides emergency power for the normal portions of lighting panels 1A, 1B and 1E during LOSP, LOSP/SI and SBO events. This load is not a design basis requirement, but it has been sequenced on the diesel generators for operator convenience during testing.

C.5.7 STATION AIR COMPRESSOR 2D

Station Air Compressor 2D is a Unit 2, non-Class 1E load that is sequenced onto the Train A diesel generators from step 6 of either the Bus 2F LOSP or ESS sequencer. This compressor provides a source of instrument air to aid in the recovery from transients and reduces the time required to restart the plant after LOSP, LOSP/SI and SBO events. This is not a design basis requirement.

C.5.8 LIGHTING TRANSFORMER 2B

Lighting Transformer 2B is a Unit 2, non-Class 1E load on the emergency section of 600V Load Center 2A. It is not load shed from the bus via undervoltage relays. When the emergency section of the load center is sequenced onto the Train A diesel generators from step 6 of either the Bus 2F LOSP or ESS sequencer, this load is energized. This transformer provides emergency power for the normal portions of lighting panels 2A, 2B and 2E during LOSP, LOSP/SI and SBO events. This load is not a design basis requirement, but it has been sequenced on the diesel generators for operator convenience during testing.

C.5.9 CONTROL ROOM AIR CONDITIONER

The air conditioning system for the Unit 1 and 2 Control Room area consists of one A Train system and one B Train system. Each system has one 20 horsepower blower and two 80 horsepower compressor units. Only one compressor unit per system is allowed to operate at any one time. Compressor units and blower units are fed from MCCs F and G. Control Room temperature must be maintained at some reasonable level but it is not critical that the air conditioner system start operating during initial diesel loading. Therefore, a time delay relay prevents the control room air conditioner system from operating until one minute after the diesel breaker closes. This places initial control room air conditioner start (under diesel power), after the final sequence step, minimizing voltage dips during sequencing.

C.6.0 REFERENCE

Reference	6.4.305	D-177195	Containment Spray Pumps
Reference	6.4.306	D-177222	Containment Coolers
Reference	6.4.307	C-177235	Reactor Cavity Cooling Fans
Reference	6.4.308	D-177277	Reactor Cavity H_2 Dilution Fans
Reference	6.4.309	D-207195	Containment Spray Pumps
Reference	6.4.310	D-207222	Containment Coolers
Reference	6.4.311	D-207235	Reactor Cavity Cooling Fans
Reference	6.4.312	D-207277	Reactor Cavity H_2 Dilution Fans
Reference	6.4.563	D-172746/2	Station Service Air Compressor 1C
Reference	6.4.564	D-172746/4	Station Service Air Compressor 1C Breaker EA15
Reference	6.4.565	D-177087	600V LC 1A, 1B, 1C, 1D & 1E Potential Trans.

FARLEY JANUARY 2005 EXAM

EXAM 50-348 AND 50-364/2005-301
JANUARY 10 - 14, 2005
JANUARY 18, 2005 (written)

DRAFT RO WRITTEN EXAM

OpsEps052
Unit 1 Electrical Distribution
Figure 1

INTENTIONALLY OMITTED

PER SISP REVIEW

TABLE 4, CONT.
Load Shedding and Diesel Loading, DG 1-2A

					ESS Sequencer		Loss of Off-site Power Sequencers	
Bkr No.	Description	Equip Rating	Train	Shed Load	Step No.	Notes	Step No.	Notes
			4160 BUS 2K					
DK-02	To LC 2K	800 KVA	A	No				
DK-03	Service Water Pump 2A	600 HP	A	Yes	3		2	
DK-04	Service Water Pump 2B	600 HP	A	Yes	3		3	
DK-05	Service Water Pump 2C	600 HP	A, B	Yes				
			600V LCC 2D					
ED-02	From 4160V Bus 2F		A	No				
ED-03	CRDM MG Set 2A	150 HP	A	Yes				
ED-04	Battery Charger 2A	120 KVA	A	Yes	6	Note 8	6	Note 8
ED-05	MCC 1F		A	No				
ED-06	MCC 2CC		A	No				
ED-08	Load Center 2A		A	Yes	6	Note 11	6	
ED-09	Battery Charger 2C	120 KVA	A, B	Yes	6	Note 8	6	Note 8
ED-10	MCC 2A		A	No				
ED-11	CRDM Cooler Fan 2A	100 HP	N	Yes				
ED-12	From Load Center 2F		A, B	No				
ED-13	MCC 1S		A	No				
ED-14	MCC 2U		A	No				
ED-15	CTMT Cooler 2A	125 HP	A	Yes	4	Note 9	4	Note 9
ED-16	CTMT Cooler 2B	125 HP	A	Yes	4	Note 9	4	Note 9

TABLE 3.
POWER SUPPLIES

LOAD	SUPPLY	EMERGENCY DIESEL	TRANSFORMER NORMAL	ALT
CONTROL ROOM A/C FAN 1A	600V MCC 1F	A TRAIN	S/U A	S/U B
CONTROL ROOM A/C COMPRESSORS 2A & 3A	600V MCC 1F	A TRAIN	S/U A	S/U B
CONTROL ROOM A/C FAN 1B	600V MCC 1G	B TRAIN	S/U B	S/U A
CONTROL ROOM A/C COMPRESSORS 2B & 3B	600V MCC 1G	B TRAIN	S/U B	S/U A
FILTRATION EXHAUST FAN 1A	208V MCC 1F	A TRAIN	S/U A	S/U B
FILTRATION EXHAUST FAN 1B	208V MCC 1G	B TRAIN	S/U B	S/U A
FILTRATION RECIRCULATION FAN 1A	600V MCC 1F	A TRAIN	S/U A	S/U B
FILTRATION RECIRCULATION FAN 1B	600V MCC 1G	B TRAIN	S/U B	S/U A
PRESSURIZATION FAN 1A AND FILTER HEATERS	600V MCC 1F	A TRAIN	S/U A	S/U B
PRESSURIZATION FAN 1B AND FILTER HEATERS	600V MCC 1G	B TRAIN	S/U B	S/U A
EXHAUST FAN 3A	600V MCC 1F	A TRAIN	S/U A	S/U B
EXHAUST FAN 3B	600V MCC 1G	B TRAIN	S/U B	S/U A
UTILITY EXHAUST FAN	208V MCC 1G	B TRAIN	S/U B	S/U A
CONTROL ROOM HUMIDIFIER	600V MCC 1G	B TRAIN	S/U B	S/U A
COMPUTER ROOM A/C UNIT	600V MCC 1G	B TRAIN	S/U B	S/U A
COMPUTER ROOM RETURN FAN	208V MCC 1G	B TRAIN	S/U B	S/U A
COMPUTER ROOM HUMIDIFIER #1	600V MCC 1F	A TRAIN	S/U A	S/U B
COMPUTER ROOM HUMIDIFIER #2	600V MCC 1G	B TRAIN	S/U B	S/U A
SPDS COMPUTER ROOM AHU A & B	600V MCC 1I	B TRAIN	S/U B	S/U A
MOV(QV2768A)	Unit 1; 120V DIST PNL 1J	A TRAIN	S/U A	S/U B
MOV(QV2768B)	Unit 1;120V DIST PNL 1K	B TRAIN	S/U B	S/U A
MOV(QV2769A)	600V MCC 1F	A TRAIN	S/U A	S/U B
MOV(QV2769B)	600V MCC 1G	B TRAIN	S/U B	S/U A
MOV (QV3478A)	600V MCC 1F	A TRAIN	S/U A	S/U B
MOV (QV3478B)	600V MCC 1G	B TRAIN	S/U B	S/U A