OFFICE OF NUCLEAR REACTOR REGULATION

UNITED STATES NUCLEAR REGULATORY COMMISSION

Enclosure 1

Agenda

• 12:30 to 12:45	Introductions and Opening Remarks (NRC)
• 12:45 to 1:15	Seabrook Design, Technical Specifications, and Regulatory Requirements TS 3.8.1.1 (FPLE)
• 1:15 to 1:45	Presentation of Licensing Solutions (FPLE)
• 1:45 to 2:00	Break
• 2:00 to 2:45	Discussion of Potential Solutions (Both)
• 2:45 to 3:15	Public Questions (NRC)

Meeting Objective

- To have an open dialogue regarding licensing solutions FPLE is considering regarding its implementation of TS 3.8.1.1

FPL

INTRODUCTION

Seabrook Station Offsite Power Source Tech Spec Application Meeting

Enclosure 2

SEABROOK STATION REPRESENTATIVES

Paul Freeman, Manager Of Engineering

Jim Peschel, Regulatory Programs Manager

Jose Garcia, Chief Nuclear Engineer

Jerry Kotkowski, Electrical Engineering Supv

Randy Jamison, Principal Electrical Engineer

FPL

MEETING PURPOSE

To discuss Seabrook's compliance with Technical Specification 3.8.1.1 , A.C. Sources

FPL

PRESENTATION AGENDA

- Technical Specification 3/4.8.1
- Description of Seabrook Station Design
- Compliance to GDC 17 Requirements
- Compliance to Regulatory Guide 1.93
- Technical Specification Bases Review
- UFSAR Review
- Other Plant Design Reviews
- Closing Remarks

FPL

TECHNICAL SPECIFICATION 3/4.8.1
A.C. SOURCES - OPERATING

LIMITING CONDITION FOR OPERATION

3.8.1.1 As a minimum, the following A.C. electrical power sources shall be OPERABLE:

a. Two physically independent circuits between the offsite transmission network and the onsite Class 1E Distribution System

FPL

DETAILED ONELINE

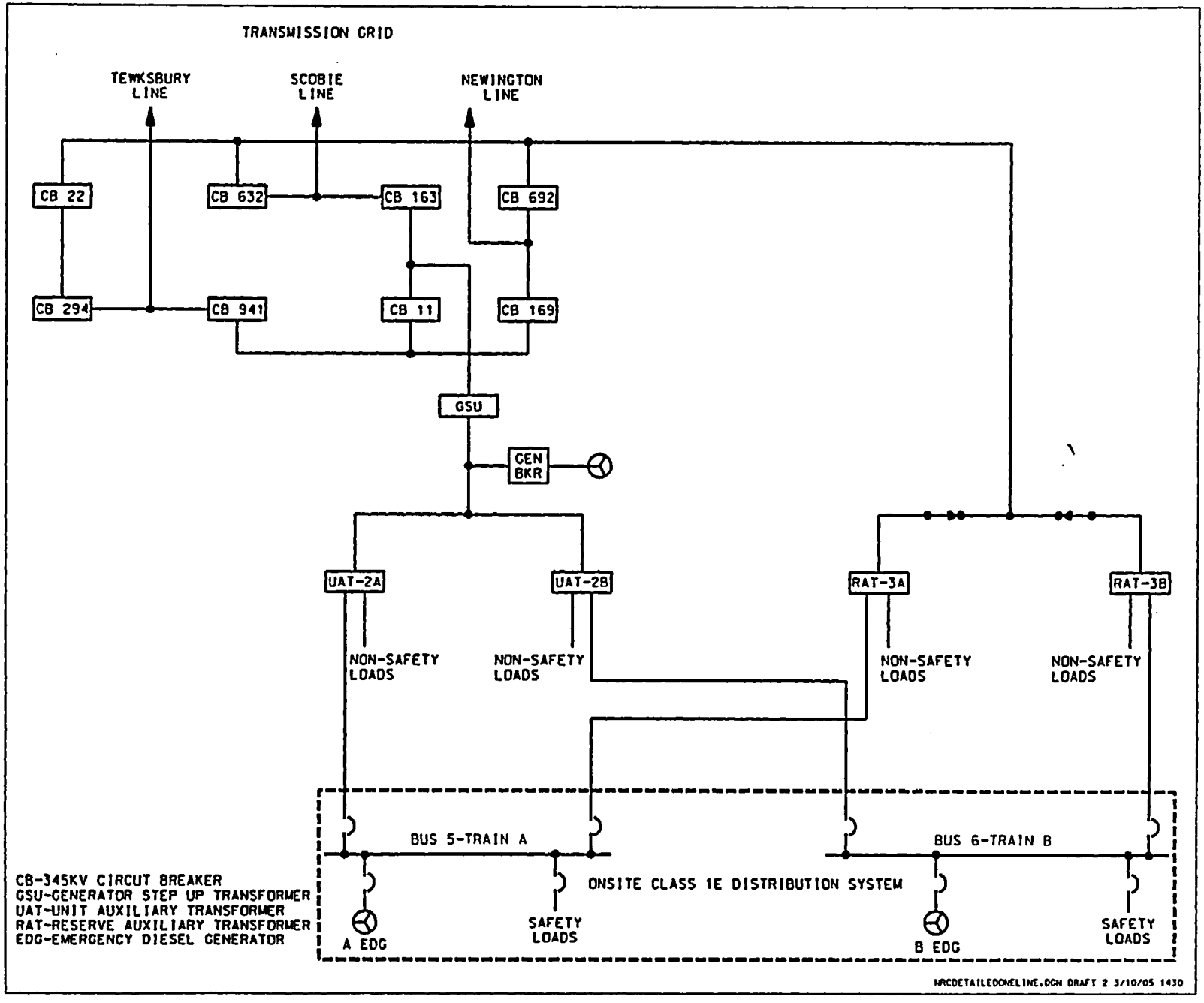

FPL

GDC 17 - Onsite Electric Power Systems

- GDC 17: "The onsite electric power supplies, including the batteries, and the onsite electric distribution system, shall have sufficient independence, redundancy, and testability to perform their safety functions assuming a single failure."

- Seabrook: The Class 1E onsite distribution system consists of two independent and redundant electrical trains with an emergency diesel generator for each train. Each train is capable of supplying the necessary safety related loads.

FPL

MINIMUM ONSITE SUPPLIES REQUIRED TO MEET GDC 17

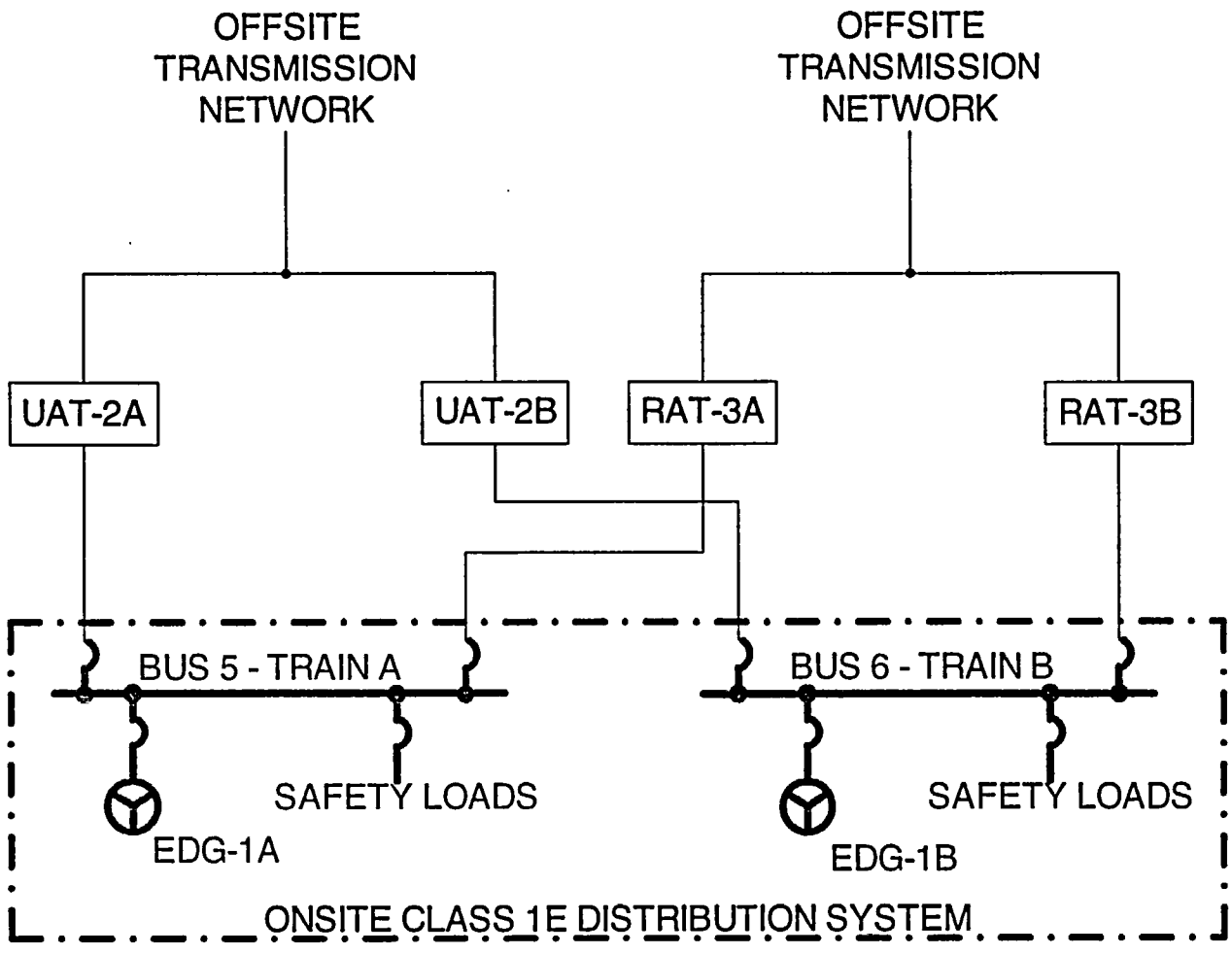

EDG - emergency diesel generator
UAT - unit auxiliary transformer
RAT - reserve auxiliary transformer

FPL

MINIMUM ONSITE SUPPLIES WITH ALL LOSSES SPECIFIED BY GDC 17

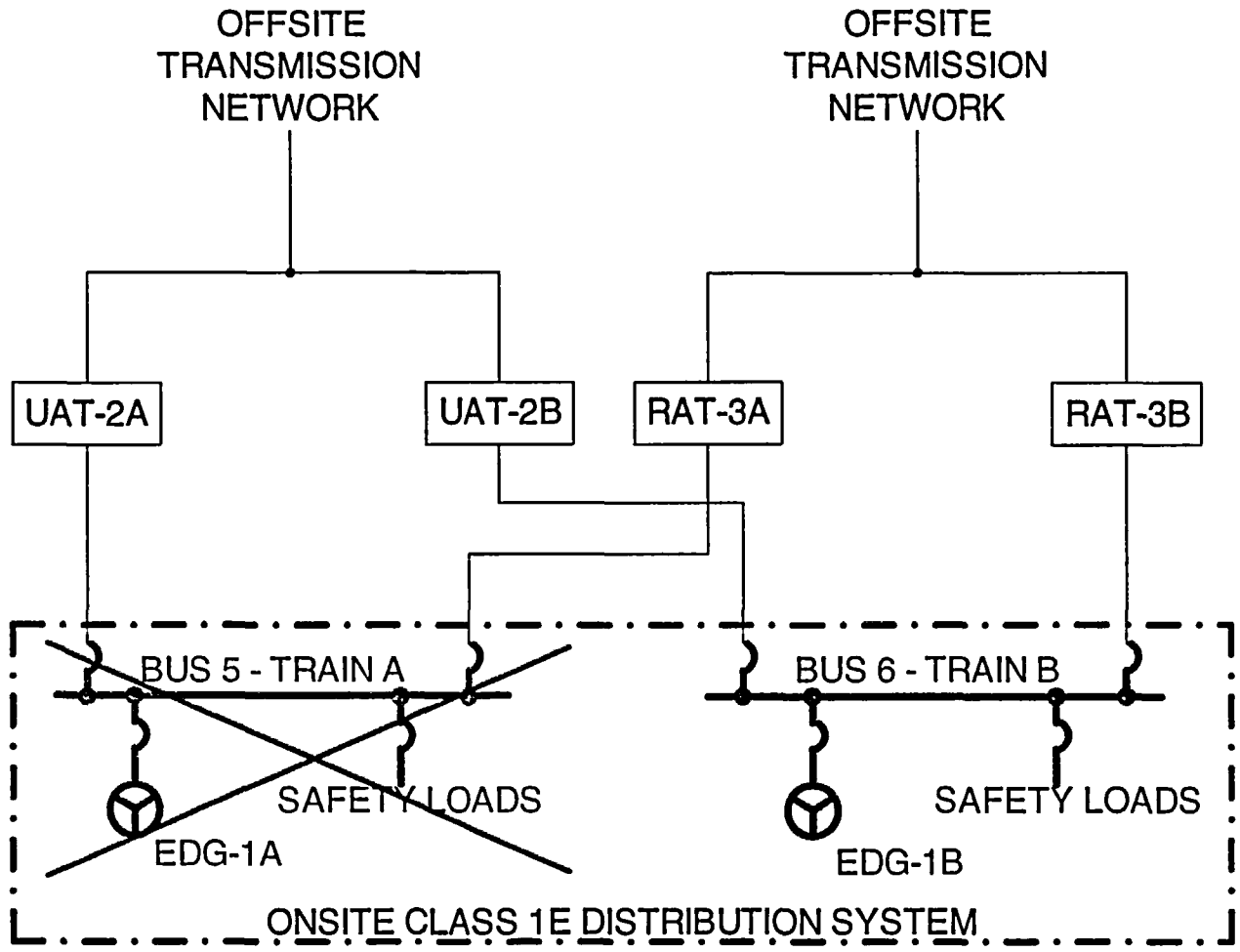

EDG - emergency diesel generator
UAT - unit auxiliary transformer
RAT - reserve auxiliary transformer

FPL

GDC 17 - Offsite Electric Power Systems

- GDC 17: "Electric power from the transmission network to the onsite electric distribution system shall be supplied by two physically independent circuits ... Each of these circuits shall be designed to be available in sufficient time following a loss of all onsite alternating current power supplies and the other offsite electric power circuit," to supply the necessary safety related loads.
- Seabrook: Design with 2 UATs and 2 RATs exceeds the GDC requirements.Two physically independent circuits are met by :

  One circuit through a UAT

  One circuit through a RAT

  Each circuit connects to the Class 1E onsite distribution system.

FPL

GDC 17 - Offsite Electric Power Systems

- GDC 17: "Each of these circuits shall be designed to be available in sufficient time ..." "One of these circuits shall be designed to be available within a few seconds following a loss-of-coolant accident to assure that core cooling, containment integrity, and other vital safety functions are maintained."

- Seabrook: Both offsite circuits are immediately available.
  UAT source directly on trip of generator breaker.
  RAT source via a fast transfer from the UAT.

FPL

MINIMUM OFFSITE CIRCUITS REQUIRED TO MEET GDC 17

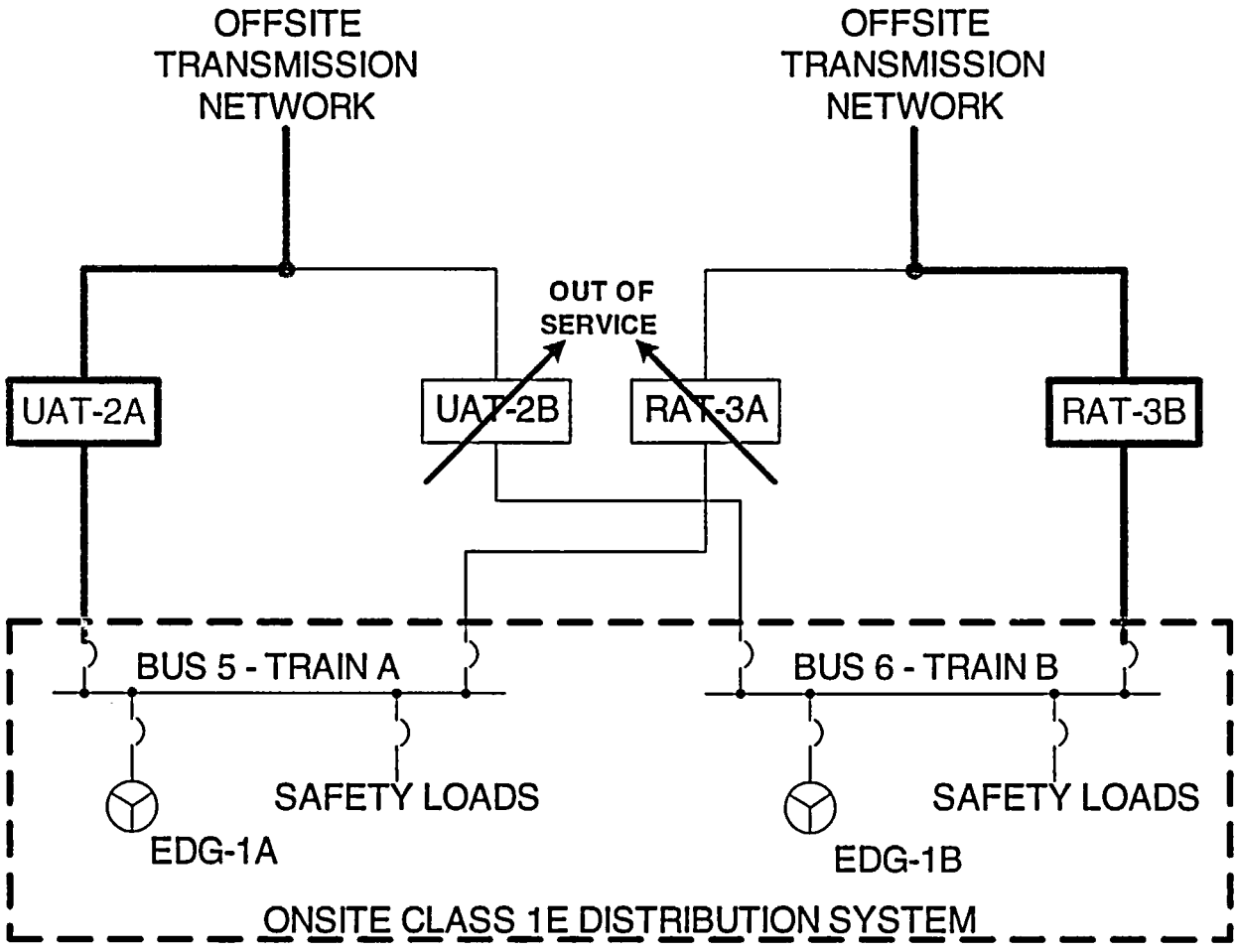

EDG - emergency diesel generator
UAT - unit auxiliary transformer
RAT - reserve auxiliary transformer

FPL

MINIMUM OFFSITE CIRCUITS WITH ALL LOSSES SPECIFIED BY GDC 17

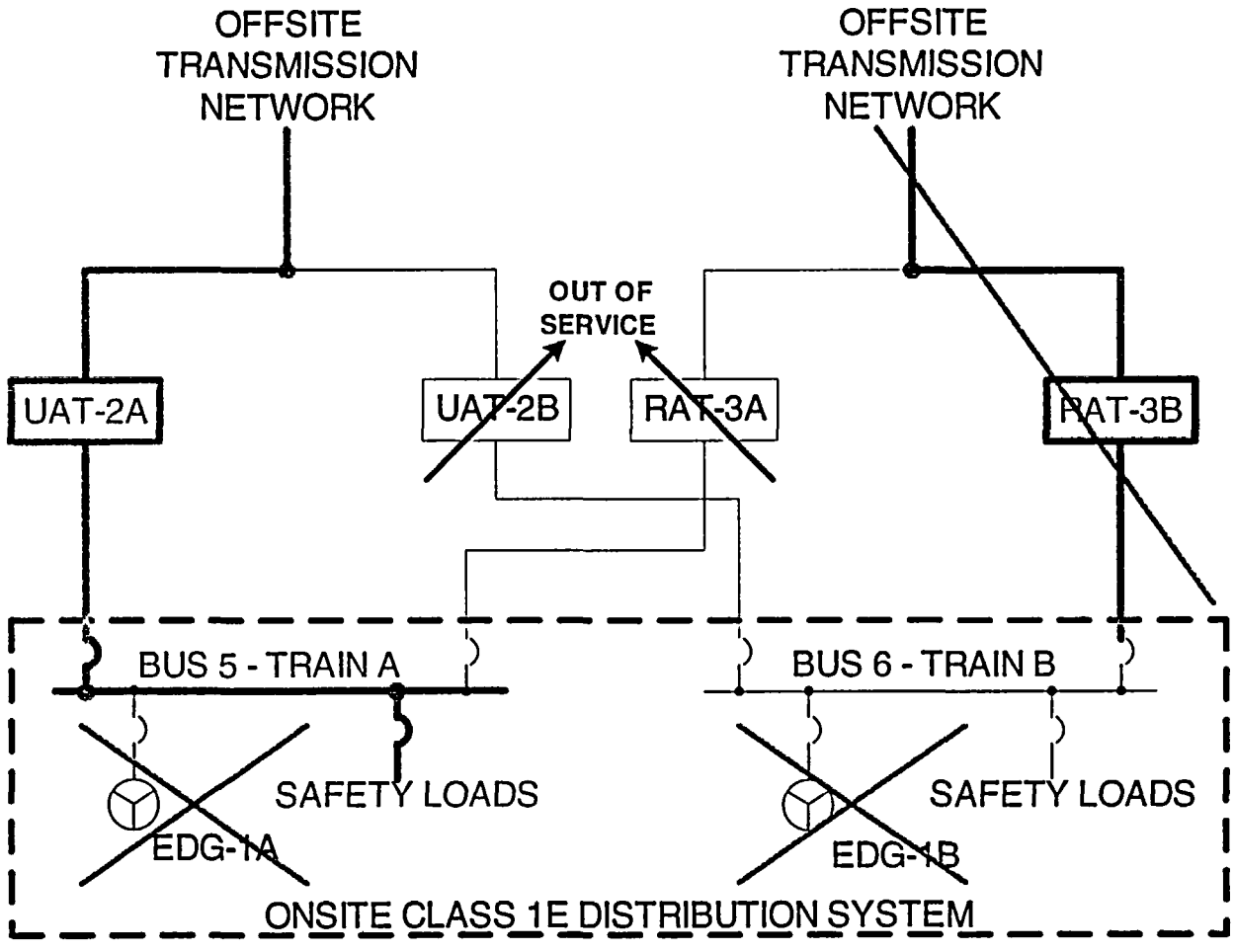

EDG - emergency diesel generator
UAT - unit auxiliary transformer
RAT - reserve auxiliary transformer

FPL

REGULATORY GUIDE 1.93

AVAILABILITY OF ELECTRIC POWER SOURCES

- RG 1.93 provides guidance for nuclear power plant electric power source Technical Specifications
- "GDC-17 specifies design requirements, not operating requirements."
- "The LCO of nuclear power plants is met when all the electric power sources required by GDC-17 are available."
- "Plants with more power sources than are required by GDC-17 can tolerate the loss of one or more sources and still meet the LCO."

FPL

ORIGINAL SEABROOK T/S BASES

- "The minimum specified independent and redundant A.C. and D.C. power sources and distribution systems satisfy the requirements of General Design Criterion 17 of Appendix A to 10 CFR Part 50."

- "The A.C. and D.C. power source allowable out-of-service times are based on Regulatory Guide 1.93, Availability of Electrical Power Sources."

FPL

CURRENT SEABROOK T/S BASES

- 2/2001 LAR 01-01 submitted
- 5/2001 NRC RAI requesting updated Bases
- 12/2001 Seabrook provided updated Bases following the STS Bases in NUREG 1431
- 3/2002 NRC issues License Amendment 80 including revised Bases
- Current T/S bases state in part, "Both offsite power circuits are designed to be connected or available via fast transfer to both ESF buses. However, the minimum regulatory requirements are met and the two offsite power circuits can be considered OPERABLE with each offsite power circuit connected or available via fast transfer to only one ESF bus as long as the two offsite power circuits are connected or available via fast transfer to opposite ESF buses."

FPL

UFSAR Section 8.2.1.5

- FSAR Amendment 47:
  - Regulatory Requirement: "General Design Criterion 17 requires two physically independent circuits to supply electric power from the transmission network to the onsite electric distribution system ..."
  - Design Capability: "...one of the required, independent, off-site circuits is connected to the onsite distribution system, including all of the emergency buses, through the unit auxiliary transformers..."
- Design capability exceeds minimum GDC 17 requirements
- 1991 UFSAR revision specified minimum regulatory requirements:
  - "The minimum requirements of GDC 17 and Reg Guide 1.32 can be met with one UAT and one RAT inoperable if the operable UAT and RAT are connected to opposite emergency buses. This connection is acceptable since there are still two independent circuits (one UAT and one RAT) from the transmission network to the onsite distribution system."

FPL

OTHER PLANT ELECTRIC SYSTEM DESIGNS

- Significant number of plants surveyed
- Majority of designs:
  - each emergency bus has only one offsite source
- One site
  - Can take offsite circuit to one emergency bus OOS without entering LCO

FPL

MAJORITY OF DESIGNS
EACH ESF BUS-ONE SOURCE

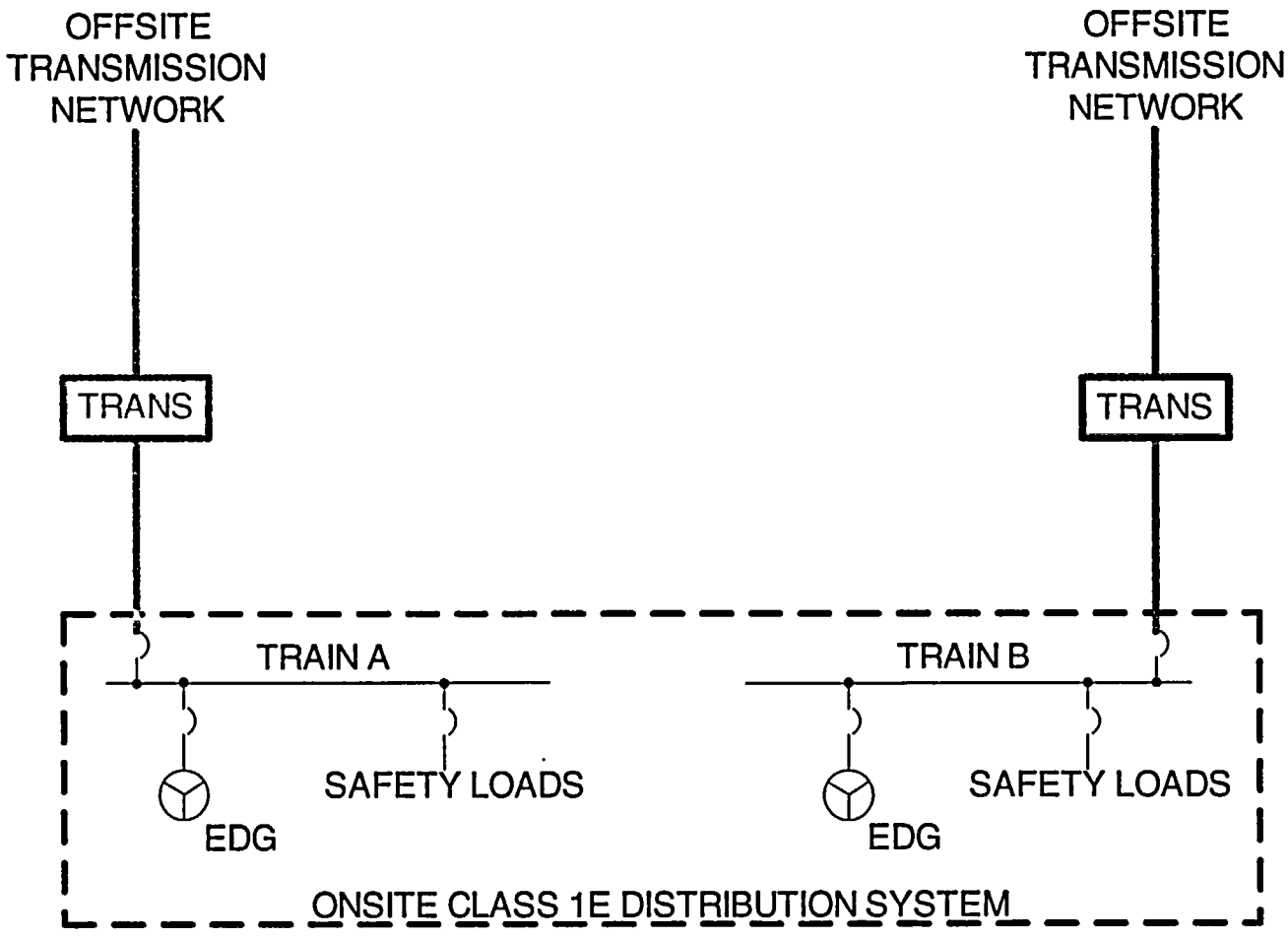

EDG - emergency diesel generator
TRANS - unit auxiliary, reserve auxiliary or startup transformer

FPL

SEABROOK ENHANCED DESIGN CAPABILITY

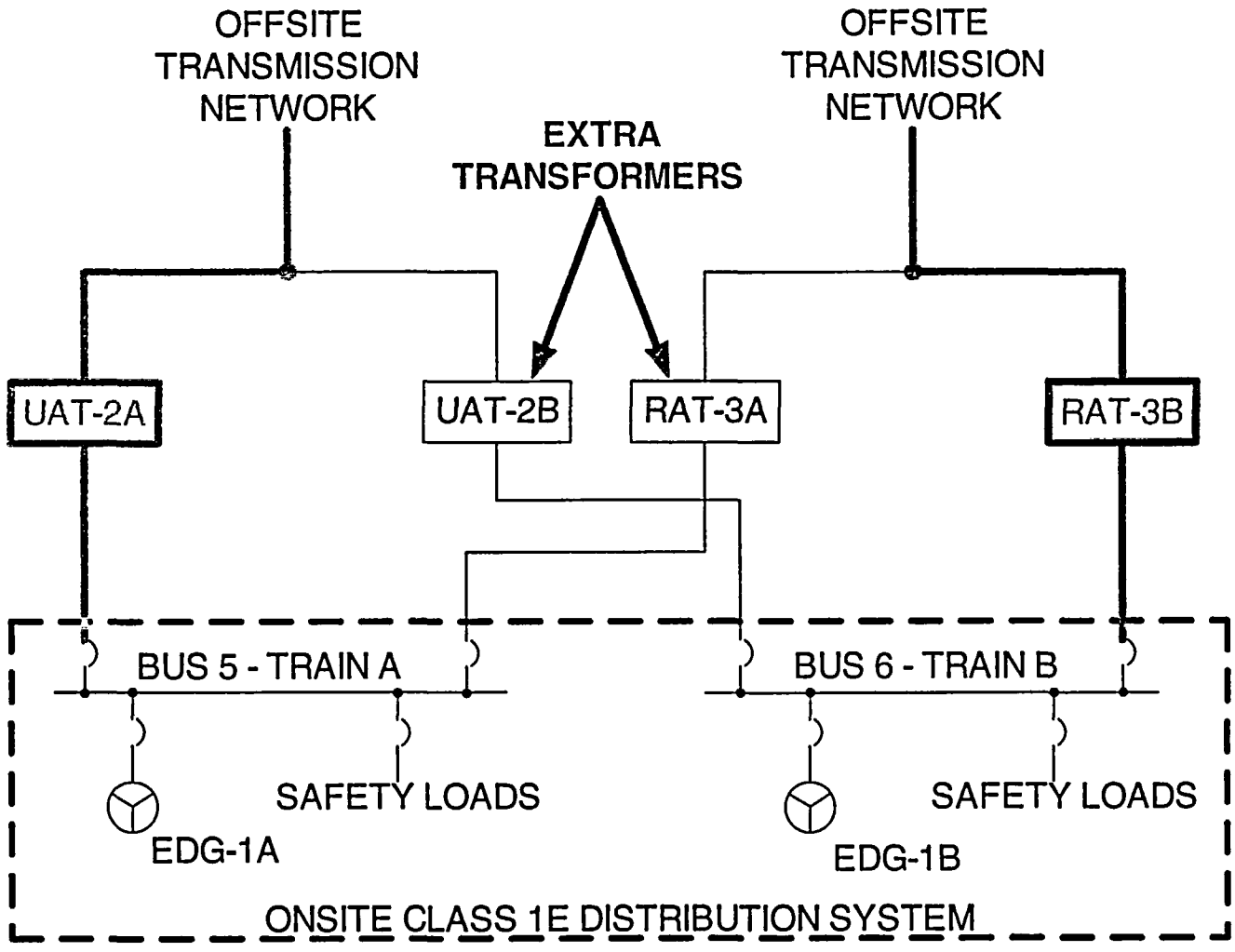

EDG - emergency diesel generator
UAT - unit auxiliary transformer
RAT - reserve auxiliary transformer

FPL

CLOSING REMARKS

- Seabrook design capability exceeds GDC 17 requirements:
  - four auxiliary transformers
  - two separate offsite circuits and transformers supply each onsite safety train
  - auto connection capability of each offsite circuit
- Seabrook meets GDC 17 with a RAT or UAT out of service since two independent circuits are still available to the onsite distribution system
- Seabrook meets RG 1.93: TS 3.8.1.1a is satisfied with a RAT or UAT out of service since all the electric power sources required by GDC 17 are available

FPL

OFFSITE POWER SOURCE CONNECTIONS

By

Randy C. Jamison - YNSD

September 21, 1990

Engineering Evaluation Number 90-41

Prepared By:	Randy C Jamison	9/21/90 (Date)
Reviewed By:	[illegible]	9/25/90 (Date)
Reviewed By:	[illegible]	10/1/90 (Date)
Approved By:	[illegible]	10/1/90 (Date)

1.0 PURPOSE:

The purpose of this Engineering Evaluation is to review the requirements in various Regulatory Documents and Industry Standards to develop a position on the minimum acceptable connections between offsite power and the Class 1E power distribution system. Specifically, show that <u>each</u> of the two required offsite power sources does not have to be connected to <u>both</u> of the redundant Class 1E buses i.e. the plant could continue to operate at 100% power with one RAT (or UAT) out of service. In the discussion, each requirement will be stated and then an interpretation provided with an overall conclusion at the end.

2.0 BACKGROUND:

As given in FSAR Section 8.2.1.5 (see attached FSAR Figure 8.2-5), each of the offsite power sources is connected to both of the emergency Class 1E buses. This can be considered a statement of how the design complies with GDC 17 not what are the minimum requirements of the Regulatory Documents and Industry Standards. It is also stated that both of the circuits are designed for immediate access to the onsite distribution system, thus meeting the preferred design of Regulatory Guide 1.32. A similar description on compliance with GDC 17 is provided in FSAR Section 3.1.2.8.

The NRC's Safety Evaluation Report (SER) documented the acceptability of the Seabrook design but did not specifically make any mention of the design feature that has each offsite source connected to both Class 1E buses.

Technical Specification 3.8.1.1.a states, for Modes 1-4, that "As a minimum, the following A.C. electrical power sources shall be OPERABLE: a.Two physically independent circuits between the offsite transmission network and the onsite Class 1E Distribution System." As written, this does not specifically require <u>each</u> of the offsite sources to be connected to <u>both</u> Class 1E buses. However, the Bases and other regulatory documents, as discussed below, must be considered when evaluating the Tech Specs requirements.

The discussion section in Surveillance Procedure OX1446.01, AC Power Source Weekly Operability Surveillance, states that "The minimum available power sources in Modes 1-4 will be maintained in a configuration such that any single failure will result in at least one offsite source supplying one emergency bus." If one RAT and one UAT were out of service and assuming the remaining RAT/UAT were connected to opposite Class 1E buses, then the offsite power sources would still seem to be considered OPERABLE since a single failure of a UAT, of a RAT, or of either offsite source would result in the other offsite source still supplying one emergency bus.

Tech Spec Bases 3/4.8.1 states that "The OPERABILITY of the power sources is consistent with the initial condition assumptions of the safety analyses and is based upon maintaining at least one redundant set

of onsite A.C. and D.C. power distribution systems OPERABLE during accident conditions coincident with an assumed loss-of-offsite power and a single failure of the other onsite A.C. source. The A.C. and D.C. source allowable out-of-service times are based on Regulatory Guide 1.93 ...". This Bases does not specifically mention offsite power source connections; it only assumes that a loss-of-offsite power occurs. It also references Regulatory Guide 1.93 (see 3.5). A single failure is only referenced with respect to the onsite sources.

3.0 DISCUSSION:

3.1 General Design Criterion 17 (GDC 17), Electric Power Systems (Revision 36 FR 12733)

Requirement:

"The onsite electric power supplies...shall have sufficient independence, redundancy, and testability to perform their safety functions assuming a single failure. Electric power from the transmission network to the onsite electric distribution system shall be supplied by two physically independent circuits...". "Each of these circuits shall be designed to be available in sufficient time following a loss of all onsite alternating current power supplies and the other offsite electric power circuit, to assure that specified acceptable fuel design limits and design conditions of the reactor coolant pressure boundary are not exceeded. One of these circuits shall be designed to be available within a few seconds following a loss-of-coolant accident to assure that ... vital safety functions are maintained."

Interpretation:

This does not specifically require <u>each</u> of the offsite sources to be connected to <u>both</u> Class 1E buses. The assumption of a single failure is only specifically required for the onsite power supplies. A single failure can not be assumed after assuming the "loss of all onsite alternating current power supplies and the other offsite electric power circuit" because the single failure could be the loss of the remaining offsite source which would result in disabling of all sources. The loss of "the other offsite electric power circuit" could be considered a single failure.

3.2 GDC 33,34,35,38,41, & 44 (fluid systems) (Revision 36 FR 3255)

Requirement:

"Suitable redundancy in components and features ... shall be provided to assure that for onsite electric power system operation (assuming offsite power is not available) and for offsite electric power system operation (assuming onsite power is not available) the system safety function can be accomplished, assuming a single failure."

Interpretation:

This means that redundant system components are needed. Redundant onsite sources (considered Class 1E) are needed so that one can supply power assuming a single failure of the other. The offsite sources can not be completely redundant and function for any single failure because they both ultimately connect to the grid and if the grid is assumed to be the single failure then both sources would be disabled. However, the connections from the grid to the safety buses could be redundant i.e. two independent connections to the safety distribution system. However, this would <u>not</u> necessarily require <u>each</u> source to be connected to <u>both</u> buses since a single failure of one connection would disable one safety bus but the other safety bus would still be operable from the other offsite connection even if this connection was only one RAT. The single failure can be the loss of "the other offsite electric power source" stated in GDC 17. It does not seem that one should have to assume loss of the onsite sources, loss of "the other offsite electric power source" and then a single failure of one of the redundant system groups such that the remaining offsite source has to be connected to both redundant systems to assure that the operable system has power.

3.3 Standard Review Plan for FSAR Section 8.2 (Revision 3,July 1983)

Requirement:

"I. The offsite power system is referred to in industry standards and regulatory guides as the preferred power system. It includes two or more physically independent circuits capable of operating independently of the onsite standby power sources and encompasses the grid, transmission lines ... provided to supply electric power to safety-related and other equipment."

"III.1.a The electrical drawings should be examined to assure that at least two separate circuits from the transmission network to the onsite power distribution system buses are provided ... ."

"III.1.d The design is examined to determine that at least one of the two required circuits can, within a few seconds, provide power to safety-related equipment following a loss-of-coolant accident. GDC 17 does not require these circuits in themselves to be single-failure-proof for this accident. ... The switchyard circuit breaker control scheme should be such that any incoming transmission line, switchyard bus,or any path to the onsite safety-related distribution buses can be isolated so that ac power can be reestablished to the onsite Class 1E buses through its redundant counterpart."

"III.1.e Each of the circuits from the offsite system to the onsite distribution buses should have the capacity and capability to supply the loads assigned to the bus or buses it is connected to ..."

"III.1.h ... An acceptable design must be capable of restoring the preferred power supply after loss of either circuit in a time period such that the plant can be safely shutdown, taking into account the effects of a single failure in the onsite distribution system.

"III.3 GDC 33,34,35,38,41 & 44 set forth requirements for the safety systems whose source of power is the preferred power system. These criteria state that safety system redundancy shall be such that, for preferred power system operation (assuming standby power is not available), the safety system function can be accomplished assuming a single failure. ... If the minimum design required by GDC 17 is provided,

the immediately available preferred circuit must be made available to the redundant portions of these systems."

Interpretation:

III.3 says that the safety system redundancy shall be such that the preferred power system (assuming standby power is not available) should be able to supply the safety system function assuming a single failure. With an immediate access offsite source connected to each redundant bus, the safety system function could be accomplished with a single failure of either offsite source or of either redundant bus. III.3 also says that the one immediate access source of the minimum GDC 17 design must be connected to both redundant buses. Said another way, each redundant bus must be connected to an immediate access source. Where two immediate access sources are provided, which is the preferred design of Reg Guide 1.32 and is the Seabrook design, it would appear acceptable to have each source connected to only one redundant bus as a minimum. An improved design would have each of the two immediate access sources connected to both redundant buses but this would exceed the minimum requirements. This conclusion would not conflict with the other listed requirements of the SRP.

3.4 Standard Review Plan for FSAR Section 8.3-1 (Revision dated 11/24/75)

Requirement:

"II.3 Acceptance Criteria ... In assuring that the design of the preferred power circuits to the safety-related buses is consistent with satisfying the power availability requirements of GDC 17, as supplemented by GDC 34,35,38,41 and 44, an acceptable design must be capable of withstanding the effects of a single failure without a reduction of the capability of the preferred power circuits to less than the minimum required for safety."

"III.3 Review Procedures ... The number of electrical circuits from the preferred power supplies to the safety buses are to be consistent with satisfying the requirements of redundancy and independence of GDC 34,35,38,41 and 44. That is, for preferred power system operation (assuming standby power is not available), the system safety function can be accomplished assuming a single failure."

Interpretation:

These requirements say that the safety system function must be able to be accomplished assuming a single failure when operating from offsite power assuming standby power is not available. If the single failure is the loss of one offsite source, then the other offsite source and redundant bus can be used to accomplish the safety system function. Therefore, each offsite source, as a minimum, only needs to be connected to one of the redundant buses.

3.5 Regulatory Guide 1.93, Revision 0, dated 12/74, Availability of Electric Power Sources (committed to in Tech Spec Bases and FSAR Section 1.8)

Requirement:

"A. INTRODUCTION 3rd paragraph, The LCO with respect to available electric power sources is an electric power system that satisfies GDC 17 ... by including the following power sources:(1) two physically independent circuits from the offsite transmission network, each of which is either continuously available or can be made available within a few seconds following a loss-of-coolant accident ... .

4th paragraph Nuclear power plants wherein only one of the two required offsite circuits can be made available within a few seconds following a LOCA are outside the scope of this guide. However, the restriction imposed on such plants on the loss of required sources would generally be more stringent than those recommended in this guide."

The remainder of the Reg Guide provides the LCOs on which the Seabrook Technical Specifications for availability of power sources are based.

Interpretation:

These requirements do not specifically address whether each of the required sources has to be connected to both Class 1E buses. It only notes that both sources have to be available within a few seconds (a few seconds is interpreted to mean immediate access). It could be inferred from this that a source would be considered INOPERABLE if something happened such that it was not available within a few seconds (immediately accessible).

Note that this Regulatory Guide seems to interpret GDC 17 as requiring both sources to be immediate access whereas GDC 17 only seems to require one source to be available within a few seconds (see 2.5).

3.6 IEEE 308-1980 IEEE Standard Criteria for Class 1E Power Systems for Nuclear Power Generating Stations (Seabrook compliance revisions are 1971 and 1974, see below)

Requirement:

"6.2.1(3) Each of the redundant load groups shall have access to both a preferred and a standby power supply. Each power supply shall consist of one or more power sources.(underline deleted in 1980)"

"6.2.3(1) Description. The preferred power supply shall consist of two or more circuits from the transmission network or equivalent source of electric energy to the Class 1E distribution system input terminals."

"6.2.3(4) Availability. A minimum of one circuit from the transmission network normally shall be available during operation. If only one circuit from the transmission network is normally available, the design shall include a provision for alternate access to the transmission network. The circuit that is normally available shall be designed to be available within a few seconds following a loss of coolant accident.

For nonaccident conditions each of these circuits shall be designed to be available in sufficient time to assure that specified acceptable fuel design limits ... are not exceeded, assuming that the other circuit and the standby power supplies are unavailable. NOTE: The above is not intended to require that the power from the transmission network must always be available."

Figure 1 of IEEE-308 shows each offsite source connected to both Class 1E buses but this figure is titled as an example not a requirement.

The requirements quoted above are from the 1980 revision because they are the most explanatory. The differences to the other revisions are underlined and are considered to have no impact on the following interpretation.

Interpretation:

6.2.1(3) says access to a ("a" meaning singular) preferred power supply not to both preferred power supplies inferring that each offsite power source does not have to be connected to both redundant load groups. 6.2.3(1&4) do not specifically say that each offsite source must be connected to both Class 1E buses. Operating with only one offsite source connected to each Class 1E bus would meet the 6.2.3(1&4) requirements as long as the sources, or at least one source, was available within a few seconds.

3.7 Regulatory Guide 1.32, Revision 2, Criteria for Safety-Related Electric Power Systems for Nuclear Power Plants (IEEE 308-1974)

Requirement:

"C.1.a Availability of Offsite Power. Consistent with the requirements of GDC 17, the phrase 'within an acceptable time' in Section 5.2.3(4) ... should be construed to mean "within a few seconds'. A preferred design would have two immediate access circuits from the transmission network. Detailed guidance for operating procedures and restrictions acceptable to the staff where two immediate access circuits are available, is contained in Regulatory Guide 1.93 ... . An acceptable design would substitute a delayed access circuit for one of the immediate access circuits provided the availability of the delayed access circuit conforms to GDC 17."

Interpretation:

As given in 3.6, IEEE-308-1980 uses the phrase 'within a few seconds'. The statements on a preferred and acceptable alternate design do not say whether each of the offsite circuits have to be connected to both of the Class 1E buses but only address immediate versus delayed access.

3.8 IEEE 765-1983, IEEE Standard for Preferred Power Supply for Nuclear Power Generating Stations (not a Seabrook compliance std)

Requirement:

"4.1 General. The preferred power supply shall consist of two or more circuits from the transmission system to the Class 1E distribution system. Some acceptable arrangements are shown in Fig 2,(a),(b),and(c)." Note that (a) and (b) show one offsite power connection to each Class 1E bus and (c) shows each offsite source connected to both Class 1E buses.

"4.2 Safety Classification. The preferred power supply is not a Class 1E system. Requirements for ... application of the single failure criterion, ... which are associated with Class 1E systems do not apply."

"4.5(4) A minimum of one PPS circuit shall be designed to be available automatically to provide power to the Class 1E buses within a few seconds following a design basis accident."

"4.5(5) A second circuit shall be designed to be available within a time period demonstrated to be adequate by the safety analysis of the station."

"4.5(6) An improved design should have two circuits automatically available to provide preferred power to the Class 1E buses within a few seconds following an accident."

"5.3.2 Independence. ... Each PPS circuit may be utilized to supply both redundant Class 1E buses as shown in Fig 2(a),(b), and (c)."

"5.3.3.1 The connection between the preferred power supply and the Class 1E power system shall be made at the input terminals of the Class 1E circuit breaker. ..."

Interpretation:

Fig 2(a) and (b) show only one offsite source connected to each Class 1E bus. 4.5(4) uses plural buses inferring that each bus needs an immediate access source. 4.5(6) says an improved design would have two immediately available circuits. 5.3.2 uses 'may' not 'shall' to say that each PPS may supply both Class 1E buses. Therefore, it would seem acceptable, as a minimum, to have each Class 1E bus connected to one immediately accessible PPS. Although this Standard is not a compliance document for Seabrook, it is referenced because it contains the most recent guidance for offsite power supplies.

3.9 Regulatory Guide 1.6, Revision 3/10/71, Independence Between Redundant Standby (Onsite) Power Sources and Between Their Distribution Systems

Requirement:

"D.2 Each a-c load group should have a connection to the preferred (offsite) power source and to a standby (onsite) power source ... . A preferred power source bus, however, may serve redundant load groups."

Interpretation:

These requirements do not say that each offsite source has to be connected to both redundant load groups.

3.10 UE&C System Description SD-71, Power Transformers, notes in the System Operational Limitations section that there is no operating limitation with any RAT out of service and that plant will have to be shutdown until a faulty UAT is isolated (not replaced). This infers that it is acceptable to operate with a UAT and RAT out of service from an operational standpoint but does not specifically discuss regulatory requirements.

3.11 The following other documents were reviewed but no requirements relative to the number of offsite power sources that have to be connected to each Class 1E bus were found:

IEEE Std 338-1977, IEEE Standard Criteria for the Periodic Testing of Nuclear Power Generating Station Safety Systems
IEEE Std 603-1980, IEEE Standard Criteria for Safety Systems for Nuclear Power Generating Stations (not a SB compliance std)
Regulatory Guide 1.41, dated 3/16/73, Preoperational Testing of Redundant On-site Electric Power Systems to Verify Proper Load Group Assignments
Regulatory Guide 1.118, Revision 2, Periodic Testing of Electric Power and Protection Systems (IEEE-338)
Technical Specification Clarification TS-078 and Interpretation TI-008, Torsional Testing
ANSI/ANS-51.1-1983, American National Standard Nuclear Safety Criteria for Design of Stationary Pressurized Water Reactor Plants

4.0 CONCLUSION:

Based on the above interpretations, it is concluded, as a minimum, that each offsite power source does not have to be connected to both of the onsite buses as long as the offsite source connected to each bus is immediately accessible. This means for Seabrook that it is acceptable to operate at 100% power (Modes 1-4) with one RAT out of service. Actually Seabrook could operate at 100% power and still meet the minimum requirements with one RAT and one UAT out of service provided the operable RAT and UAT were connected to opposite Class 1E buses. Note that use of this configuration should be minimized since it is preferable to operate with each offsite source connected to both Class 1E buses for better reliability and availability. This conclusion is supported by the following specific requirements/interpretations from Section 3.0:

a) None of the requirements specifically say that each of the offsite sources has to be connected to both Class 1E buses,

b) The requirements in GDC 33,34,35,38,41,and 44 are met since when one RAT supplies power to its connected Class 1E bus and the UAT(s) supplies power to the other Class 1E bus, the system safety function can still be accomplished assuming onsite power is not available and assuming a single failure, where the single failure could be the RAT, the UAT(s), or either Class 1E bus,

c) An immediate access source is connected to each Class 1E bus as required by SRP-8.2 and Regulatory Guides 1.32 & 1.93, and

d) Two of the figures in IEEE-765 show only one offsite source connected to each Class 1E bus.

5.0 FIGURES:

FSAR Figure 8.2-5 (attached)

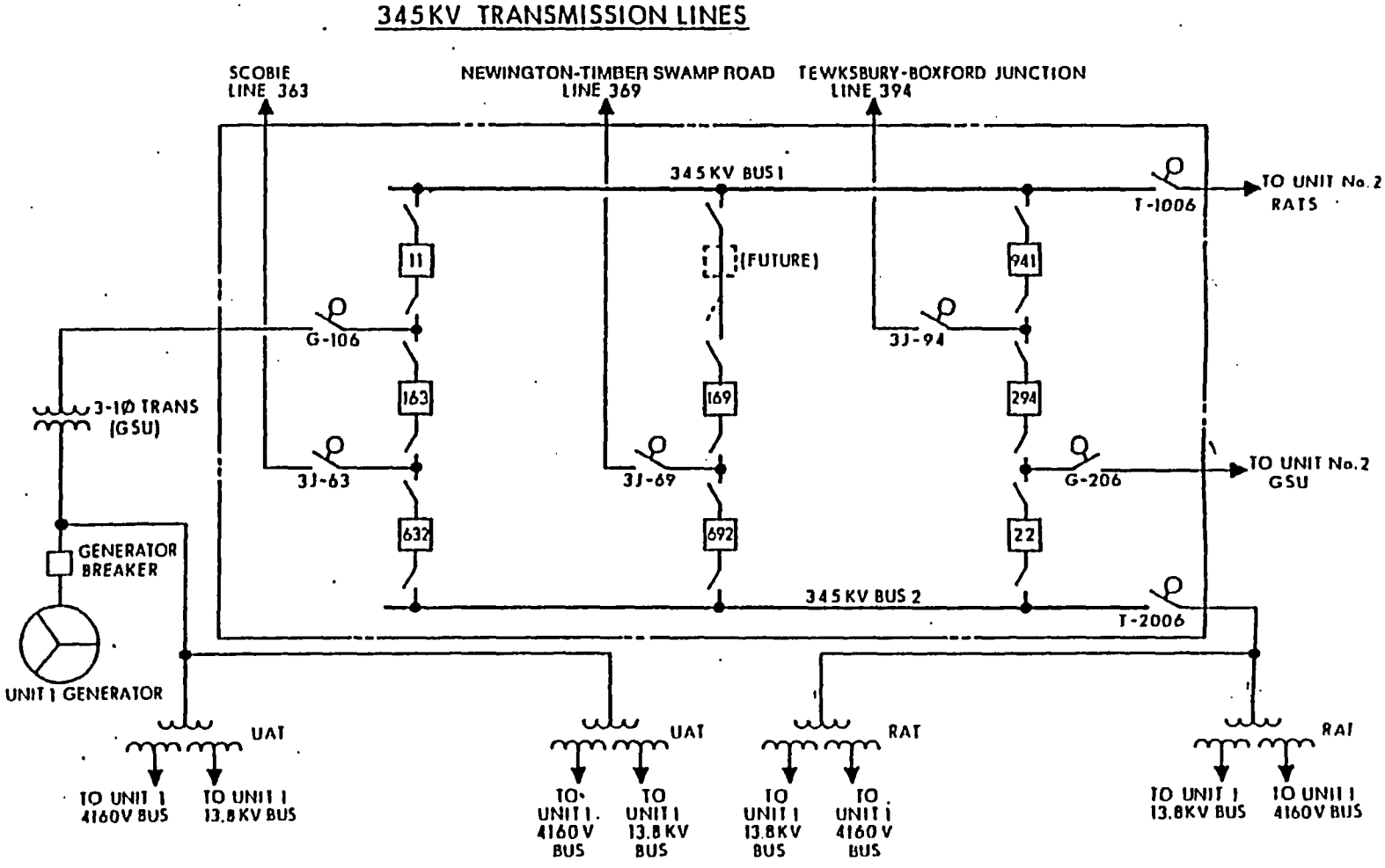

PUBLIC SERVICE COMPANY OF NEW HAMPSHIRE
SEABROOK STATION - UNITS 1 & 2
FINAL SAFETY ANALYSIS REPORT

345 KV SWITCHING STATION
ONE LINE DIAGRAM

9763-001-M300009

FIGURE 8.2-5

ATTACHMENT TO
ENGINEERING EVALUATION 90-41

-10-

Amendment 62

SORC DOCUMENT SUBMITTAL

From: K. Letourneau Ext.: 2227 Mail Code: 01-62 Date: 3/5/91
(Comment Resolver)

To: SORC Secretary

Document No.: Chapter 8 - UFSAR Rev.: 0

Document Title: Updated FSAR Chapter 8
Electric Power FCR91-022

Summary: SEE Attached Summary of
Changes with 10CFR 50.59 Eval.

Drawing enclosed have been revised

Recommended Reviewers: Kline Laird
Milone
Lovesque

Requested Meeting Date: 3/20/91

☐ Check block if a walk-thru or less than two-week review is requested.
(Requires justification and * Station Manager approval below.)

Justification:

Approved: [signature]
Technical Projects Supervisor (* Station Manager)

SSMM FORM 5-13
Rev. 20

FCR # 91-022

FSAR CHANGE REQUEST

APPROVED ☐ DISAPPROVED

FCR No.	2. DCR No.	3. Date	4. Page 1 Rev. 0 Total Pages 11
91-022	NA	2-26-91	

Originator	6. Organization
K.J.Letourneau	NHY Engineering

Affected Sections, Tables, and/or Figures: list below and attach mark-ups.

See Page 2

TIONS	PAGE NO.
LES	PAGE NO.
URES	DRAWING NO.

Reasons/Justifications

Update for FSAR per letter LIC#900662 and LIC#900710

. References

.0. Review Comments/Resolutions (use additional sheets as necessary)

ev. 2 NHY Form 17310 A

3

7.0 Affected sections, tables, and/or figures: Listed below and attached mark-ups.

SECTION	UFSAR PAGE NO.
8.1.1	8.1-1, 8.1-4, 8.1-6
8.2.1	8.2-1, 8.2-2, 8.2-3,
8.2.1.3	8.2-4, 8.2-5, 8.2-6, 8.2-7, 8.2-8, 8.2-9, 8.2-10, 8.2-11, 8.2-12, 8.2-13, 8.2-14, 8.2-15, 8.2-16
8.2.1.5	8.2-17
8.2.1.7	8.2-18
8.2.2.2	8.2-19, 8.2-20
8.2.2.3	8.2-20, 8.2-21
8.3.1.1.c.7	8.3-13, 8.3-14
8.3.1.1.2.5.a	8.3-23, 8.3-25
8.3.1.1.g	8.3-29
8.3.1.2.a.3	8.3-34
8.3.1.2.b.4	8.3-37
8.3.1.2.c	8.3-39
8.3.1.4	8.3-46, 8.3-50, 8.3-54, 8.3-56, 8.3-57
8.3.2.1	8.3-64

TABLES

8.3-9
8.3-10

4

FSAR CHANGE REQUEST CONTINUATION SHEET

1. FCR No. 91-022	2. DCR No.	3. Date 2-26-91	4. Page 3
5. Originator K.J.Letourneau		6. Organization NHY Engineering	

7. 10 CFR 50.59 Review

[ ] DCR has completed 10 CFR 50.59 review form (Form 11210 A) attached.

[X] Completed 10 CFR 50.59 review form (NHY Form 11210 A) attached to FCR.

8. K.J.Letourneau K.J.Letourneau — Originator — Date 2-26-91

9. [signature] — Originator's Group Manager — Date 3/4/91

10. J.Vargas J.M.Vargas — Manager of Engineering — Date 2/28/91

11. [signature] for AMC — Licensing Manager — Date 3/4/91

12. SORC Meeting No. 91-048

[signature] — Station Manager — Date 3/20/91

13. _____ — All Reviews Complete - Licensing Manager — Date _____

Rev. 2 NHY Form 17310 B

5

FSAR CHANGE REQUEST REVIEW SHEET

1. FCR No. 91-022	2. Organization NHY Engineering	3. Page 4

4. Review Organization	Reviewed By/Date:
ELECT ENG	Gerald A Kotkowski

Rev. 2

NHY Form 17310 C

7

10 CFR 50.59 EVALUATION

IDENTIFICATION NUMBER

Sheet 6

7. SAFETY EVALUATION

These questions shall be answered if any question in block 4 or 5 is answered YES.

A. Will the probability of an accident previously evaluated in the FSAR be increased? ☐ YES ☒ NO

B. Will the consequences of an accident previously evaluated in the FSAR be increased? ☐ YES ☒ NO

C. Will the probability of a malfunction of equipment important to safety be increased? ☐ YES ☒ NO

D. Will the consequences of a malfunction of equipment important to safety be increased? ☐ YES ☒ NO

E. Will the possibility of an accident of a different type than any previously evaluated in the FSAR be created? ☐ YES ☒ NO

F. Will the possibility of a malfunction of a different type than any previously evaluated in the FSAR be created? ☐ YES ☒ NO

G. Will the margin of safety as defined in the basis for any technical specification be reduced? ☐ YES ☒ NO

BASIS (supporting information is required for each question, attach additional pages as necessary):

See sheet 11

8. NSARC REVIEW	50.90 LICENSING AMENDMENT
MEETING#_____	SUBMITTAL REFERENCE_____ DATE SUBMITTED_____
DATE_____	
NSARC CHAIRMAN CONCURRENCE	REGULATORY COMPLIANCE MANAGER

Rev. 9

NHY Form 11210
Page 2 of 2

6

10 CFR 50.59 EVALUATION

1. IDENTIFICATION NUMBER:	SHEET 5 OF
2. TITLE: Chapter 8 FSAR Update	
3. INITIATOR: K.J.Letourneau	DATE: 2-26-91

4. DETERMINATION OF SAFETY EVALUATION APPLICABILITY

Does the proposed change:

A. Make changes in the facility as described in the FSAR?	☒ YES	☐ NO
B. Make changes in procedures as described in the FSAR?	☒ YES	☐ NO
C. Involve tests or experiments not described in the FSAR?	☐ YES	☒ NO

BASIS (supporting information is required for each question, attach additional pages as necessary):

See sheet 7-10

5. OPERATING LICENSE

A. Does the proposed change require a change to the existing Operating License (including the Technical Specifications) or are additional Operating License requirements needed?	☐ YES	☒ NO
B. Does the proposed change require a 10 CFR 50.54 submittal?	☐ YES	☒ NO

BASIS (supporting information is required for each question, attach additional pages as necessary):

See sheet 10

6. REVIEWS

INDEPENDENT REVIEW	ENGINEERING REVIEW	SORC REVIEW
REVIEWER [signature]	REVIEWER [signature]	MEETING: 91-018
DATE 2-28-91	DATE 2/28/91	DATE 3-30-91
		[signature] STATION MANAGER APPROVAL

Rev. 9

NHY Form 11213 A
Page 1 of 2

8

Summary of Changes

1. Section 8.1 and 8.2 were revised to reflect the installation of the Tewksbury line. The text made reference to the installation of two lines prior to start up of Unit 1 with the third line installed prior to start up of Unit 2. All three lines were installed prior to Unit 1 operation and therefore the text is being revised to show the actual configuration and descriptions. The forced outage rates and grid availability date is being revised to reflect the current data. The 1989 data and analysis conclude that the availability factors have improved. Other changes involve administrative and editorial corrections.

2. Section 8.3 was revised to delete all references to Requests for Additional Information (RAIs). Where there was insufficient descriptive information regarding the subject matter of the RAI in the text the descriptions were modified to clarify the section. These clarifications do not change the intent or requirements as previously stipulated and are considered administrative.

3. Responsibilities for the administration to assure compliance with applicable design criteria and bases relative to the independence of electrical redundant systems were changed from the Architectural Engineer and field electrical supervisor to Plant Engineering and Technical Support Engineering respectively in Section 8.3.1.4.k.1. This change has no effect on the associated systems or methods of assurance and is considered administrative.

4. Table 8.3-10, Electrical Cable and Raceway Separation Criteria, is being revised to reflect the separation criteria exceptions allowed by FSAR Sections 7.1.2.2 and 8.3.1.4(a). This only applies to the internal wiring within the Westinghouse instrument cabinets in the main control room which consists of the Nuclear Instrumentation, Process Systems, and solid-state protection system input cabinets. This change provides only clarification to reflect the requirements and is considered administrative..

5. All references to a two unit facility are being changed to reflect a single unit along with the associated language and figures. Other miscellaneous changes involve spelling corrections and clarifications as a result of descriptive omissions in Sections 8.1, 8.2, and 8.3. These changes do not affect the technical requirements of the facility and are considered administrative.

PE026

9-

6. Section 8.3.1.1.c.7(c), special 480 Volt Criteria for the Service Water Cooling Tower Fans is being deleted. This section was required to describe the process of supplying fans 1-SW-FN-51B and 2-SW-FN-51B from either unit to provide the required cooling. With Unit 2 unavailable for an alternate source and not required for operability of both fans this section is not required. (Reference FSAR Section 9.2.5)

7. The description in Section 8.3.1.1.e.6 regarding diesel generator load sequence testing is being revised by deleting the permissive of a tower actuation signal in conjunction with a safety injection signal. The load sequence testing only requires a loss of offsite power with a safety injection signal. This change brings the FSAR in conformance with the Technical Specifications and commitments stated in the SER supplement 6.

8. In Section 8.3.1.1.e.5 the load acceptance test refers to Table 8.3-2 to demonstrate the capability to accept the design load. The load that demonstrates this capability used for factory testing is shown on Table 8.3-1, SI signal with a LOP. This correction is typographical and properly reflects the regulatory requirements (Ref. R.G. 1.9, IEEE 387).

9. The fifth paragraph in Section 8.3.1.4.b.2(a), Associated Circuits that have protective devices located in the Nuclear Island, does not pertain to this section. This paragraph is applicable to Section 8.3.1.4.2(b), Associated Circuits that have Protective Devices Outside the Nuclear Island and is being relocated as such this change does not alter the plant design or any regulatory commitments and is considered administrative.

10. Section 8.2.1.5 description was modified to clarify the two independent circuit paths as required by GDC-17. This is required to clearly define the different connections that can be made between the UATs and the RATs to the onsite distribution system to meet the regulatory intent. This change does not alter the original design intent and is supported by the existing Technical Specification.

11. Section 8.3.1.2.b.4 was revised to add CRDM and 15 kV to the penetration circuit protection exceptions. This is required to reflect the information presented in Section 8.3.1.1a and 8.3.1.1c. This omission is considered editorial and has no effect on the FSAR requirements.

12. Section 8.3.1.4.b.3 was modified to document equipment exceptions that exist in certain plant buildings. Some of the 120V/240V distribution panels in the switchyard relay room, Guard House, I&C Hot Shop, Administration Building, Fire Pump House and the Radiation Calibration Facility are not similar to the qualified panels. These panels are acceptable because circuits receiving power from these panels remain in their respective areas, are routed in dedicated raceways outside these areas or have been analyzed to show that they cannot challenge other associated or Class 1E circuits.

PE0261

10

13. Section 8.3.1.4.f was modified to document cable qualification exceptions that exist in certain plant buildings such as the Fire Pumphouse, Relay Room, and the Guard House. Some of the cables installed are not environmentally qualified like the 1E cables. These cables have equivalent construction to the 1E cables, remain within their respective areas, and are in buildings and systems outside the Nuclear Island. These cables have been analyzed to show that they cannot challenge class 1E circuits.

14. Section 8.3.2.1.b deletes the sentence; "In effect, four 200 percent batteries are provided". This deletion is required to prevent misinterpretation in conjunction with the previous sentence which describes the battery capacity. This revision does not change the intent and is considered editorial.

15. The table of contents is being revised for correction, omissions, and deletions as necessary to reflect text changes.

16. Table 8.3-9 is being revised to correct the alarm description for the DG loss of field condition and a typographical error. These changes provide only clarification to reflect the requirements without changing the intent and are considered administrative.

17. The Seabrook Station Technical Specification, Bases 3/4.8.2 states that "The Surveillance Requirement for demonstrating the OPERABILITY of the station batteries are based on the recommendations of Regulatory Guide 1.29, "Maintenance, Testing, and Replacement of Large Lead Storage Batteries for Nuclear Power Plants", February 1978, and IEEE Standard 450-1980, IEEE Recommended Practice for Maintenance, Testing, and Replacement of Large Lead Storage Batteries for Generating Stations and Substations". The Seabrook Station FSAR, Section 8.1.5.2.b, states that the Seabrook design meets the requirements of IEEE 450-1975. This results in an inconsistency between the Technical Specifications and the FSAR.

    To resolve this inconsistency, the FSAR is being revised to reflect compliance with the 1980 revision of IEEE 450. Engineering and Maintenance have evaluated the 1980 revision and have concluded that Seabrook does meet the requirements of the 1980 revision except that the yearly inspections are performed on a refueling shutdown basis (at least once per 18 months), as given in the Technical Specifications. This change meets the design bases, has no affect on the functionality or performance of the system, and does not reduce the effectiveness of the surveillance requirements.

4. Determination of Safety Evaluation Applicability

4A. These items change the facility descriptions for the referenced FSAR sections. They do not affect the associate systems as they pertain to the design basis, regulatory requirements, and functionality.

4B. Item 4 revises a procedure pertaining to Administrative responsibility and control for assuring compliance with cable design criteria and bases relative to the independence of redundant systems to reflect the current organizations. This does not change the intent or effectiveness of its implementation. Compliance to this criteria is now assured by the Engineering and Technical Support Groups. Chapter 13 was also reviewed and determined not to require any changes as a result of these changes. These changes do not alter the performance, functionality or affect methods of operation for the applicable systems.

4C. These changes do not require any field modifications, do not involve tests methods outside the FSAR parameters and are not considered experimental. These changes reflect the existing configuration which has been tested in accordance with the FSAR testing requirements.

5. Operating License

5A. These changes are intiated to reflect the actual plant configuration and do not result in non-compliance to the conditions of the operating license. A review of Section 3.8 (electrical) of the Tech. Specs. was performed which verified changes to be in compliance with these requirements including the design bases. Other sections are unaffected by these changes.

5B. These changes do not require a submittal pursuant to 10 CFR 50.54 because they do not affect or violate the requirements as stipulated.

Attachment 6

13

Form 2 Sheet 1 of 4

UPDATED FSAR REVIEW - RAI REVIEW FORM

UFSAR Section: Chapter 8

Reviewer: R J. Letourneau

RAI#	Categorization (S/P/F/None)	Comments	Resolution
430.1	F	None	
430.2	F	None	
430.3	F	Additional Info	
430.4	P	No further action reqd.	
430.5	F	Deleted RAI reference	
		added clarifing info.	
430.6	F	None	
430.7	F	None	
430.8	F S	Description is being	
		changed to reflect a	
		one unit plant.	
430.9	F	None	
430.10	F	None	
430.11	F	None	
430.12	P	None	
430.13	F	None	
430.14	P	None	
430.15	None	None	
430.16	F	None	
430.17	F	None	
430.18	F	None	
430.19	None	Removed Info	
430.20	F	None	
430.21	None	For Clarif. only	
430.22	F	None	

R J Letourneau 12-25-91 /

Reviewer Date Consolidation Reviewer Date

Attachment 6

14

Form 2 Sheet 2 of 4

UPDATED FSAR REVIEW - RAI REVIEW FORM

UFSAR Section: Chapter 8

Reviewer: R J Letourneau

RAI/	Categorization (S/P/F/None)	Comments	Resolution
430.23	None	None	
430.24	None	None	
430.25	F	None	
430.26	F	None	
430.27	F	None	
430.28	F	None	
430.29	F	None	
430.30	F	None	
430.31	F	None	
430.32	P	None	
430.33	None	None	
430.34	F	None	
430.35	F	None	
430.36	P	None	
430.37	F	None	
430.38	F	None	
430.39	F	None	
430.40	F	None	
430.40A	F	None	
430.41	F	None	
430.42	None	None	
430.43	F	None	
430.44	None	None	
430.45	F	None	
430.46	None	None	

R J Letourneau 12-25-91 /

Reviewer Date Consolidation Reviewer Date

Attachment 6

15

Form 2 Sheet 3 of 4

UPDATED FSAR REVIEW - RAI REVIEW FORM

UFSAR Section: Chapter 8

Reviewer: K. J. Letourneau

RAI#	Categorization (S/P/F/None)	Comments	Resolution
430.47	F	None	
430.48	F	None	
430.49	None	None	
430.50	None	None. Ref Deleted in text	
430.51	None	None	
430.52	None	None	
430.53	F	None	
430.54	F	None	
430.55	F	None	
430.56	P	None. Delete Ref in Text	
430.57	F	None	
430.58	None	None	
430.59	F	None	
430.60	F	None	
430.61	None	None	
430.62	P	RAI reference was	
		deleted. verbage added	
430.63	None	None	
430.64	P	None	
430.65	None	None	
430.66	P	Item is still shown	←
430.70	None	None	
440.113	P	None	
440.127	P	None	
430.109	F	None	

K J Letourneau 12-25-91 /
Reviewer Date Consolidation Reviewer Date

Attachment 6

16

Form 2 Sheet 4 of 4

UPDATED FSAR REVIEW - RAI REVIEW FORM

UFSAR Section: Chapter 8

Reviewer: R. J. Letourneau

RAI#	Categorization (S/P/F/None)	Comments	Resolution
640.32	P	None	
420.57	F	None	

R.J. Letourneau 12-25-91 /
Reviewer Date Consolidation Reviewer Date

SORC DOCUMENT REVIEW COMMENTS SUMMARY

Page 1 of 1

Letourneau
Comments Resolver

Document Number: Updated FSAR Chapter 8 Document Revision Number: 0 Date: 3/19/91

Document Title: Electrical Distribution

COMMENTOR NAME	PAGE/ PROCEDURE/ SECTION	COMMENT	RESOLUTION
Pucko	8.2.2.3 Pg. 8.2-20	Results & Conclusions should also address Tewksbury-Seabrook line.	The results and conclusions will be changed to add Tewksbury-Seabrook. Also, this section has been revised slightly for clarification. See attached sheet.

SSMM FORM 5-IA
Rev. 18

Forced outages of 345 kV transmission lines with at least one terminal under PSNH control were analyzed to determine the actual forced outage rate. Based on operating history from December 1972 through September 1990 (5466.8 circuit mile years) the total forced outage rate was 1.97 outages per 100 circuit miles per year.

Outage rates by causes were:

Lightning and unknown	.49/100mi/yr.
Relay-related problems	.55/100mi/yr.
Clearance problems	.33/100mi/yr.
All other problems	.60/100mi/yr.

8.2.2.3 Power Flow and Stability Studies

Power flow and transient stability studies (see Subsection 8.2.3; references 6,7, and 13) demonstrate that Seabrook Station and the Seabrook - Scobie, Seabrook-Timber Swamp - Newington, and Seabrook - Tewksbury 345 kV lines meet the NEPOOL "Reliability Standards For the New England Power Pool" and the NPCC "Basic Criteria for the Design and Operation of Interconnected Power Systems." By meeting these standards and criteria, the studies affirm that adherence to proper system operating procedures will result in stable operation of the interconnected power system. This in turn will result in a reliable source of offsite power for Seabrook Station, which satisfies the requirements of GDC 17.

As system configuration warrants and on a periodic basis, NEPOOL will review the performance of the New England Bulk Power Supply System. These operational and planning reviews will be performed in accordance with both NEPOOL standards and NPCC criteria. These review processes assure that operating procedures are kept current and Seabrook Station continues to have a reliable source of offsite power.

Results and Conclusions

The 1985 studies (see Subsection 8.2.3, Reference 13) demonstrated that Seabrook Station connected to the transmission system by two 345 kV lines (Seabrook-Scobie Pond and Seabrook-Newington) can meet the NEPOOL "Reliability Standards for the New England Power Pool" and the NPCC "Basic Criteria for Design and Operation of Interconnected Power Systems." Since then, a third 345 kV line has been built (Seabrook-Tewksbury). This line provides additional flexibility which results in improved reliability.

The load flow studies demonstrate the power system can be operated such that all voltages and line loadings can be within required limits, for the loss of the Seabrook to Scobie Pond line, the Seabrook to Newington line, the Seabrook to Tewksbury line or for any other representative line contingency.

Frequency decay rates (initiated by a sudden generation/load imbalance) are predicted to be less than the maximum credible frequency decay rates used by Westinghouse to determine loss of flow transients caused by frequency decay events. This conclusion is based on analysis and experience in the NPCC system (of which the New England 345 kV grid is part). Although it is not possible to predict with certainty the boundaries of electrical islands, should they occur, computer studies for the NPCC system (Reference 11), have shown that the frequency decay does not exceed 4 Hz/second. These studies took into account the NPCC underfrequency load shedding program.

The transient stability and power flow studies show that with proper system operating procedures, stable operation of the interconnected power system can be maintained and availability of offsite power supplies to Seabrook Station will not be impaired. In so doing, base case voltages, line loadings, and equipment loadings on the 345 kV transmission system will be within normal limits at both heavy and light load levels, and will be within the applicable emergency limits for contingency conditions.

8.2.3 References

1. "Bulk Power System Protection Criteria," Northeast Power Coordinating Council.

2. "Basic Criteria for the Design and Operation of Interconnected Power Systems," Northeast Power Coordinating Council.

3. "Reliability Standards for the New England Power Pool," New England Power Pool.

4. ANSI C2, "National Electrical Safety Code."

5. "Code for the Installation and Maintenance of Electrical Transmission Lines," Commonwealth of Massachusetts (applies within Massachusetts only).

6. Public Service Company of New Hampshire, Seabrook Station, Unit No. 1 and Unit No. 2 Transient Stability Study, January 1980.

7. Public Service Company of New Hampshire, Seabrook Station, Unit No. 1 and Unit No. 2 Power Flow Study, January 1980.

8. NPCC Report: "Analysis of the NPCC 1985 Transmission System," June 1976; NPCC Working Group No. 17.

9. NPCC Report: "Analysis of the NPCC 1983 Summer and 1983/4 Winter Transmission System," July 1979; NPCC Working Group No. 27.

practical the likelihood of their simultaneous failure under operating and postulated accident and environmental conditions.

One of the required, independent, offsite circuits is connected to the onsite distribution system, including all of the emergency buses, through the unit auxiliary transformers, as shown in Figure 8.3-1. The supply to the unit auxiliary transformers can be traced from the transformers through the generator isolated phase bus, the generator step-up transformers, the gas-insulated isolated phase bus of the 345 kV switching station, and then to an offsite transmission line. The second required, independent, offsite circuit is connected to the onsite distribution system, including all of the emergency buses, through the reserve auxiliary transformers, also indicated on Figure 8.3-1. This circuit can be traced from the reserve auxiliary transformers through a different portion of the gas-insulated isolated phase bus of the 345 kV switching station, and then to another offsite transmission line. This description of the Seabrook design includes two unit auxiliary transformers (VAT) and two reserve auxiliary transformers (RAT) with one VAT and one RAT connected to each emergency bus. The minimum requirements of GDC 17 and Reg Guide 1.32 can be met with one VAT and one RAT inoperable if the operable VAT and RAT are connected to opposite emergency buses. This connection is acceptable since there are still two independent circuits (one VAT and one RAT) from the transmission network to the onsite distribution system.

The connections from the transformers to the onsite distribution system of these two circuits are made with separate nonsegregated phase bus ducts which provide the necessary separation to minimize the likelihood of simultaneous failure of these circuits to the extent practical.

Both of these circuits are designed for immediate access to the onsite distribution system, thus meeting the preferred design of the Regulatory Guide 1.32.

Redundant protective relaying systems and utilization of a breaker-and-a-half switching station, together minimize the likelihood of any single failure causing the loss of more than a single circuit. The transmission lines have also been designed to minimize simultaneous failures. The northerly line is on a separate right-of-way from the two westerly lines. The two westerly lines are also on separate rights-of-way, except for the 5 miles near the plant site. Within this 5 miles of common right-of-way, the circuits are on separate towers and are conservatively designed and located so that the failure of one line will not affect the other.

8.2.1.6 Compliance with General Design Criterion 18

The offsite electric power system complies with General Design Criterion 18.

Inspection and testing of the transmission line protective relaying and the 345 kV circuit breakers can be performed without disrupting the operation of the plant or the availability of the two offsite circuits. Furthermore, the electrical power system is designed to permit testing of the operability and

Name	Organization	Phone	E-mail
G EDWARD MILLER	NRC/NRR	301 415 2481	gxm@nrc.gov
Carl Schulten	NRC/NRR	301 415-1192	cssl@nrc.gov
Om P Chopra	EEIB/NRR	301-415-5265	OPC@NRC.GOV
Ronaldo V. Jenkins	NRC/NRR/EEIB	301-415-2985	rvj@nrc.gov
Kenneth Jenison	NRC RI	610 337 5244	KNJ@nrc.gov
Robert Clark	NRC/NRR	301-415-2297	RLC2@nrc.gov
James A. Isom	NRC/IIPB	301-415-1109	jai@nrc.gov
Cornelius Holden	NRC/NRR	301-415-3036	cfh@nrc.gov
PRESENT VIA TELEPHONE			
PAUL KROHN	NRC/RGN-I	610-337-5120	pgk1@nrc.gov
JOEL WIEBE	NRC/RGN-I	610-337-5259	jsw4@nrc.gov
JIM KRAFTY	NRC/RGN-I	610-337-5068	Jak1@nrc.gov
PAT FINNEY	NRC/RGN-I	610-337-5344	pwf@nrc.gov
JEFF TOSEY	NRC/RGN-I	610-337-5139	jej1@nrc.gov

Name	Organization	Phone	E-mail
Don P Chopra	EEIB/NRR	301-415-3265	dpc@nrc.gov
John Roggie	USNRC Region 1	6108375146	JFR@NRC.Gov
Paul Freeman	FPLE	603-474-9581	Paul_Freeman@FPL.com
James Peschel	FPLE	603-773-7154	james_peschel@fpl.com
José Garcia	FPL	561-694-3371	jose_garcia@fpl.com.
GERALD KOTKOWSKI	FPLE	603 773 7282	GERALD_KOTKOWSKI@FPL.COM
Randy Jamison	FPLE	603-773-7810	RANDY_Jamison@FPL.COM
Darrell V. Roberts	NRC	301-415-1669	dlr@nrc.gov