TEST REPORT

Hemyc (1-Hour) Electrical Raceway Fire Barrier Systems Performance Testing

Cable Tray, Cable Air Drop and Junction Box
Raceways

Project No. 14790-123264

FINAL REPORT

April 18, 2005

OMEGA POINT LABORATORIES, INC.
16015 Shady Falls Road
Elmendorf, TX 78112
(v) 210-635-8100
(f) 210-635-8101
800-966-5253
www.opl.com

Prepared for:
SANDIA NATIONAL LABORATORIES
P.O. Box 5800
Albuquerque, NM 87185-5800

Abstract

This document describes the evaluation of two standard electrical cable tray sizes, one junction box and two electrical cable air drops, all protected with the Hemyc One Hour Electrical Raceway Fire Barrier System (either directly attached or with a 2" stand-off), when exposed to the ASTM E119 time-temperature heating curve for a period of one hour. Results are given in the Conclusion Section of this report.

The details, procedures and observations reported herein are correct and true within the limits of sound engineering practice. All specimens and test sample assemblies were produced, installed and tested under the surveillance of either Sandia National Laboratories, the manufacturer's or the testing laboratory's in-house Quality Assurance Program. This report describes the analysis of a distinct assembly and includes descriptions of the test procedure followed, the assembly tested, and all results obtained.

Deggary N. Priest, President — April 18, 2005 Date

Reviewed and approved:

Constance A. Humphrey
QA Director — April 18, 2005 Date

Omega Point Laboratories, Inc.
16015 Shady Falls Road
Elmendorf, Texas 78112-9784
210-635-8100 / FAX: 210-635-8101 / 800-966-5253
www.opl.com / e-mail: dnpriest@ix.netcom.com

ACCREDITED
No. 0689-01

TABLE OF CONTENTS

ITEM		PAGE
PURPOSE AND SCOPE		4
OBJECTIVE		5
TEST PROCEDURE		5
Horizontal Test Furnace		5
Furnace Pressure		7
Thermocouple Locations		8
Data Acquisition Systems		8
Correction Factor		9
Hose Stream Test		9
Assessment Criteria		10
TEST SPECIMEN CONSTRUCTION		10
Supporting Deck		10
CONDUCT OF TEST		12
TEST RESULTS		13
CONCLUSIONS		16
APPENDICES		
Appendix A:	TEST PLAN	17
Appendix B:	CONSTRUCTION DRAWINGS	65
Appendix C:	THERMOCOUPLE LOCATIONS	71
Appendix D:	TEST DATA	88
Appendix E:	HEMYC INSTALLATION INSTRUCTIONS	200
Appendix F:	QA DOCUMENTATION FOR HEMYC INSTALLATION	326
Appendix G:	OPL QUALITY ASSURANCE DOCUMENTATION	350
Appendix H:	PHOTOGRAPHS	498
LAST PAGE OF REPORT		522

PURPOSE AND SCOPE

Note: This section has been reproduced in part from the Test Plan contained in Appendix A.

Section 50.48, "Fire Protection," of 10 CFR Part 50 requires that each operating nuclear power plant have a fire protection plan that satisfies General Design Criterion 3 of Appendix A to 10 CFR Part 50. Criterion 3 requires that structures, systems, and components important to safety shall be designed and located to minimize, consistent with other safety requirements, the probability and effect of fires and explosions. Noncombustible and heat resistant materials shall be used wherever practical throughout the unit, particularly in locations such as the containment and control room. Fire detection and fighting systems of appropriate capacity and capability shall be provided and designed to minimize the adverse effects of fires on structures, systems, and components important to safety. Firefighting systems shall be designed to assure that their rupture or inadvertent operation does not significantly impair the safety capability of these structures, systems, and components. Section 50.48 also requires that all plants with operating licenses issued prior to January 1, 1979, satisfy the requirements of Sections III.G, III.J, and III.O of Appendix R to 10 CFR Part 50. (Post 1979 plants (per 10 CFR Part 50.48) have to comply with the provisions of their licenses.)

Section III.G of Appendix R, which addresses fire protection of safe shutdown capability, requires that fire protection features be provided such that one train of systems necessary to achieve hot shutdown conditions remains free of fire damage. One acceptable means of satisfying this requirement is to separate cables and equipment and associated non-safety circuits of redundant systems necessary to achieve and maintain hot shutdown conditions located in the same fire area by a fire barrier having a 3-hour fire rating (Section III.G.2.a). Another means is to enclose cables and equipment and associated non-safety circuits of one redundant train in a fire barrier having a 1-hour fire rating and install fire detectors and an automatic fire suppression system in the fire area (Section III.G.2.c).

The scope of this [project] is to describe the overall plan for investigating the fire resistance rating of [the] Hemyc (1-hour) ... electrical raceway fire barrier system (ERFBS). The primary approach ... [was] to perform [an] ... ASTM E 119 furnace test on a number of electrical cable raceway types that [were] protected by ... the Hemyc ... fire barrier material. The Hemyc test [was] performed for a period of 60-minutes, followed by a hose stream test and post-test visual inspection of the ERFBS. . . .

OBJECTIVE

Note: This section has been reproduced in part from the Test Plan contained in Appendix A.

The objective of this program [was] to assess the fire resistance rating of Hemyc ERFBS by subjecting various test specimens (electrical cable trays, air drops and junction boxes) to standard temperature-time conditions as specified in ASTM E 119 and criterion stipulated in GL 86-10, Supplement 1. The types and characteristics of the ERFBS protecting the test specimens are intended to simulate as-installed configurations.

TEST PROCEDURE

Note: Since the Test Plan (Appendix A) includes an accurate and complete description of the test procedure to be followed, much of these details have not been reproduced in the main body of this report.

Horizontal Test Furnace

The 12' x 18' x 7' deep horizontal test furnace used in these evaluations was designed to allow the specimen to be uniformly exposed to the specified time-temperature conditions. It is fitted with 12 symmetrically-located premixed air/propane gas burners designed to allow an even heat flux distribution across the exposed surface of a horizontal test specimen. Furnace pressures may be maintained at any value from +0.03" W.C. to -0.05" W.C. The furnace consists of a structural steel frame, lined with sheet metal and insulated with a six inch thick layer of ceramic fiber.

12' x 18' Horizontal Furnace (Overhead View)

The temperature within the furnace is determined to be the mathematical average of thermocouples located symmetrically within the furnace with half positioned twelve inches below the bottom surface of the test deck and the other half located 12" below the bottom of the test specimens. In this manner, an average exposure on the entire assembly can be determined by averaging the readings in real time and adjusting the average temperature to follow the standard time-temperature curve. The materials used in the construction of these thermocouples are those suggested in the E119 test standard. During the performance of a fire exposure test, the furnace temperatures are monitored at least every 15 seconds and displayed for the furnace operator to allow control along the specified time-temperature curve. All data is saved to hard disk at intervals of once per minute unless more often is requested.

The fire exposure is controlled to conform with the standard time-temperature curve shown in Figure 1, as determined by the tables below:

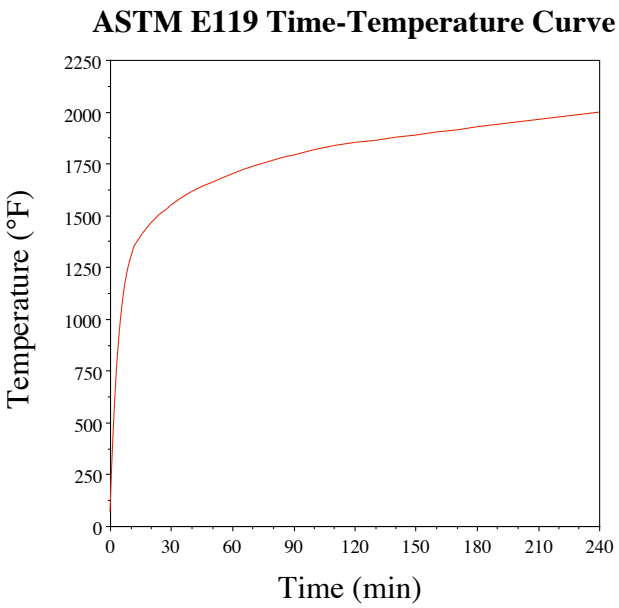

Time (min)	Temperature (°F)
0	68
5	1000
10	1300
20	1462
30	1550
60	1700
90	1792
120	1850
180	1925
240	2000

Figure 1 E119 Temperature Exposure

The furnace interior temperature during a test is controlled such that the area under the time-temperature curve is within 10% of the corresponding area under the standard time-temperature curve for 1 hour or less tests, 7.5% for those less than 2 hours and 5% for those tests of 2 hours or more duration.

Furnace Pressure

The pressure differential between the inside of the furnace (as measured approximately 12" below the exposed surface of the test support slab) and the laboratory ambient air was maintained at 0.00 inches of water column for the duration of the fire exposure test (after the first five minutes, during which furnace stabilization was achieved). This was achieved and controlled by adjusting the inside furnace pressure until slight puffs of intermittent flames extended through unused thermocouple probe holes in the sides of the furnace, indicating a very slight positive pressure at these locations.

Thermocouple Locations

All four electrical cable trays were instrumented with 24 GA. Type K glass/glass insulated thermocouples (Special Limits of Error: ±1.1°C) purchased with calibration certifications and lot traceability. The thermo-junctions were mechanically attached along the mid-height of each tray side rail by clamping them under the heads of #8x32 stainless steel machine bolts placed into holes drilled and threaded to receive them, spaced 6" o.c. Bare #8 AWG, multiple-strand copper conductors were instrumented with similar thermocouples attached every 6 inches along the wire's length. These thermocouples were attached by placing the thermo-junction in direct contact with the surface of the wire and crimping the junction to the copper wire with a copper Buchanan 2011S open end splice cap fastened in place with a Buchanan C-24 "pres-SURE" tool. The instrumented bare #8 AWG conductor was then secured in place along the bottom longitudinal centerline of the tray rungs with plastic cable ties.

Two electrical cable air drop systems were simulated using bare #8 AWG, multiple-strand copper conductors, instrumented with similar thermocouples, installed 6" o.c. and held in place with Buchanan 2011S open end splice caps.

The outer surfaces of the junction box were instrumented with 1/16" diameter Inconel® sheathed, 30 Ga. Type K thermocouples, to allow them to withstand the temperatures which may be experienced by their leads passing between the junction box and outside the heated area. These thermocouples were not purchased with calibration certificates, but instead were numbered and sent to Sandia National Laboratories, which performed a series of multi-temperature point calibrations of them. The results of these calibrations are presented in Appendix D, Quality Assurance.

See Appendix C Thermocouple Locations for exact locations of all test item thermocouples.

Data Acquisition Systems

The outputs of the thermocouples were monitored by 300 channel and 100 channel Yokogawa, Inc., Model Darwin Data Acquisition Units, driven by Macintosh computers. The furnace control thermocouples were monitored by a separate 100 channel Yokogawa, Inc. Model Darwin Data Acquisition Unit and Macintosh computer. The computers were programmed in LabVIEW 5.0 to send the commands to the data acquisition systems to sample the data input lines and to convert the raw data into a usable format (i.e., degrees Fahrenheit) for display on screen and storage as an ASCII tab-delimited text file. Those files were then, after the test, imported into MS Excel for

tabular and graphical display.

Correction Factor

In accordance with ASTM E119, when the indicated resistance period is 1/2 h or over, determined by the average or maximum temperature rise on the unexposed surface or within the test sample, or by failure under load, a correction shall be applied for variation of the furnace exposure from that prescribed, where it will affect the classification, by multiplying the indicated period by two thirds of the difference in area between the curve of average furnace temperature and the standard curve for the first three fourths of the period and dividing the product by the area between the standard curve and a base line of 68°F (20°C) for the same part of the indicated period, the latter area increased by 3240°F•min to compensate for the thermal lag of the furnace thermocouples during the first part of the test. For a fire exposure in the test higher than standard, the indicated resistance period shall be increased by the amount of the correction. For a fire exposure in the test lower than standard, the indicated resistance period shall be similarly decreased for fire exposure below standard. The correction is accomplished by mathematically adding the correction factor, C, to the indicated resistance period.

The correction can be expressed by the following equation:

$$C = \frac{2I(A - A_s)}{3(A_s + L)}$$

where:

C = correction in the same units as I,
I = indicated fire-resistance period,
A = area under the curve of indicated average furnace temperature for the first three fourths of the indicated period,
A_s = area under the standard furnace curve for the same part of the indicated period, and
L = lag correction in the same units as A and A_s (54°F•h or 30°C•h (3240°F•min or 1800°C•min))

Hose Stream Test

Immediately following the fire endurance test, a hose stream test was performed in accordance with USNRC Generic Letter 86-10, Supplement 1, Enclosure 1, Section VI. The hose stream was "applied at random to all exposed surfaces of the test specimen through a 1-1/2" fog nozzle set at a

discharge angle of 15 degrees with a nozzle pressure of not less than 75 psi and a minimum discharge rate of 75 gpm with the tip of the nozzle at a maximum of 10 feet from the test specimen. Duration of the hose stream application is 5 minutes." Prior to the hose stream application, the laboratory ensured the correct angle spray pattern, pressure and flow was achieved through calibrated gauges and other equipment as required.

Assessment Criteria

The test specimens were subjected to the ASTM E 119 temperature-time profile in the test furnace. An assessment of the ERFBS performance was based on two principal factors, as stated in Generic Letter 86-10, Supplement 1:

1. *The time at which the average unexposed side temperature of the fire barrier system, as measured on the exterior surface of the raceway or component, exceeds 139° C (250° F) above its initial temperature. Or the time at which a single temperature reading of a test specimen exceeds 30% of the maximum allowable temperature rise (i.e., 180° C [325° F]) above its initial temperature.*
2. *The fire barrier system remains intact during the fire exposure and water hose stream test without developing any openings through which the cable raceway is visible.*

TEST SPECIMEN CONSTRUCTION

Supporting Deck

A 13' x 19' insulated 10 GA. steel deck was designed to accept the test items in this project. The deck was continuously welded and reinforced with 4" structural steel channel, as indicated in the drawings in Appendix B. The placement of all test items in the deck was adjusted to maximize distances between items and between items and furnace walls, and to minimize shadowing effects between items.

Each of the electrical cable trays were designed to pass through the test deck, extend 36" below the insulated lower surface of the deck, turn 90° (through a zero radius turn) to horizontal, extend a total of 60", and then turn 90° upwards (through a sweeping, 12" radius turn) and pass back up and through the supporting deck. The electrical cable air drops were designed to pass through the test deck, extend 36” below the deck insulation, then turn and pass back up and through the supporting deck. There was a 24” separation between the vertical legs of each electrical cable air drop assembly.

All test items were supported by structural elements on the unexposed side of the test deck at distances of 12" and 30" above the deck. No supports were used inside the furnace for the electrical cable trays. The junction box was held in place inside the furnace by a pair of "trapeze" supports, made of Unistrut that was wrapped in 2" thick Kaowool blankets. These blankets were secured to the support members by tape. The junction box, protected by Hemyc ERFBS, was mounted on the wrapped supports and secured by metal bands. Each of the electrical cable air drops was supported at its mid-point by a pair of metal bands secured to the test deck.

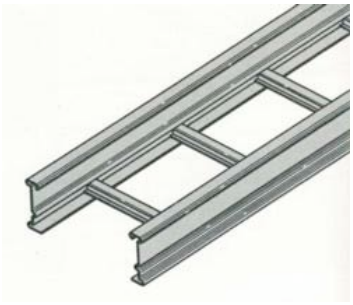

The weight of each side rail for the straight tray sections was 1.17 lbs/ft. The tray was constructed of pre-galvanized rails and rungs.

Each 4" x 12" galvanized steel tray system consisted of a 4" x 12" ladderback tray with 9" rung spacing (B-Line Systems, Model 248P09-12-144). The maximum fill depth was 3" and the side rail thickness was 0.048". A straight section passed down through the test deck for a minimum distance of 36", transitioned through a zero-degree radius bend (B-Line Systems, Model 9P8024) into a horizontal section of similar tray, and then transitioned through a sweeping (12" radius) 90° bend (B-Line Systems, Model 4P1290VI12) upwards into another straight section of tray which then passed up and through the test deck. The length of the horizontal section was 60" from vertical section to vertical section (inside dimensions).

Each 4" x 36" galvanized steel tray system consisted of a 4" x 36" ladderback tray with 9" rung spacing (B-Line Systems, Model 248P09-36-144). The maximum fill depth was 3" and the side rail thickness was 0.048". A straight section passed down through the test deck for a minimum distance of 36", transitioned through a zero-degree radius bend (B-Line Systems, Model 9P8024) into a horizontal section of similar tray, and then transitioned through a sweeping (12" radius) 90° bend (B-Line Systems, Model 4P3690VI12) upwards into another straight section of tray which then passed up and through the test deck. The length of the horizontal section was 60" from vertical section to vertical section (internal dimensions).

Raceway	Raceway Weight Per Unit Length (lb/ft)
2A (12" Tray)	3.05
2B (12" Tray)	3.05
2C (36" Tray)	4.07
2D (36" Tray)	4.07
2E (Air Drop)	0.43
2F (Air Drop)	0.48
2G (Junction Box)	26.07 lb

The weights of each raceway were determined prior to mounting them in the deck. Knowing their lengths, the weights per unit length were then calculated.

The Junction box weight is reported as a single item.

CONDUCT OF TEST

Preburn Inspections

As required in the Test Plan, prior to the commencement of the fire endurance test, a thorough check of the test assembly and associated equipment (including calibration of the data recording equipment) and completion of applicable Laboratory QA/QC checklists were performed and documented by the testing laboratory.

Written approval of the construction, assembly, installation and instrumentation was supplied by OPL and signed by Sandia National Laboratories' representative prior to performance of the fire exposure test (a sign-off sheet for this purpose was supplied by the Laboratory).

The test assembly was then placed on the large scale horizontal fire resistance furnace and the thermocouples connected to the data acquisition system and their outputs verified. The test assembly was inspected one last time before the furnace was closed prior to the test. Upon receipt of approval to proceed, the test was initiated. Following the fire exposure test, all data acquisition systems were recalibrated in accordance with the Test Plan.

TEST RESULTS

The thermocouples were connected to the data acquisition systems and their outputs verified on March 24, 2005. The furnace was fired on March 25, 2005, and computer data collection of thermocouple data continued for 60 minutes. The ambient temperature at the start of the test was 73°F, with 89% relative humidity. The furnace was fired at 9:10 AM and the standard time-temperature curve followed for 60 minutes. The pressure differential between the inside of the furnace (as measured 12" below the exposed surface of the test slab) and the laboratory ambient air was maintained at 0.00 inches of water column for the duration of the fire exposure test (after the first five minutes, during which furnace stabilization was achieved).

Persons present to perform or witness the test were as follows:

Deggary Priest	-	Omega Point Laboratories, Inc.
Connie Humphrey	-	Omega Point Laboratories, Inc.
Mike Dey	-	Omega Point Laboratories, Inc.
Cleda Patton	-	Omega Point Laboratories, Inc.
Troy Bronstad	-	Omega Point Laboratories, Inc.
Oscar Estrada	-	Omega Point Laboratories, Inc.
Richard Beasley	-	Omega Point Laboratories, Inc.
Laudencio Castanon	-	Omega Point Laboratories, Inc.
Frank Wyant	-	Sandia National Laboratories
Bruce Levin	-	Sandia National Laboratories
Charles Girard	-	URS Corporation (SNL contractor)
David Lew	-	US Nuclear Regulatory Commission
Mark Salley	-	US Nuclear Regulatory Commission
Roy Woods	-	US Nuclear Regulatory Commission
Alex Klein	-	US Nuclear Regulatory Commission
Randy Brown	-	Promatec
Mike Jordan	-	Promatec
Frank Haese	-	Promatec

Observations made during the test were as follows:

TIME (h:min:s)	OBSERVATIONS
0:00	Furnace ignited at 9:10 AM.
1:30	Some smoke from the top seals on the deck. Tape on JB supports burning.
10:45	JB supports still flaming on the bottom.
12:00	Stitches on the seams are breaking along the sweeping 90° elbow on Item 2B.
28:00	JB supports till flaming on bottom.
60:00	Furnace extinguished. Specimen thermocouples were disconnected and the test assembly lifted from the furnace, observed, photographed and moved to the hose stream test area. The test items with obvious openings included: 2A, 2C, 2E, and 2G.
1:06:49	Hose stream began at a nozzle spray angle of 15°, pressure at 75 psi and from a distance of 10 ft. The entire test assembly was slowly spun and the hose stream operator remained stationary and applied the hose to the test items as they passed in front of him.
1:11:49	Hose stream stopped. The test assembly was then observed, photographed and allowed to drip for several hours before being placed on 8' tall 24" ø pipe stands and undergoing post-test disassembly. There were no significant changes in any of the exterior claddings on the raceways due to the hose stream test.

Observations made after the hose stream test.

Test Item	Observation
2A	Edge joints open on horizontal and vertical sides around zero radius bend.
2B	No significant openings.
2C	Openings around circumferential joint through which the raceway could be seen.
2D	One opening at inside of sweeping 90° elbow, some torn outer fabric.
2E	Openings around circumferential joint through which the raceway could be seen.
2F	No openings.
2G	Openings along edge joints.

Other than small pieces of the deck insulation falling to the laboratory floor, the test assembly showed no visible effect due to the hose stream test. Much steam and dripping hot water remained after the hose stream was stopped.

In accordance with the E119 test standard, a calculation for any correction to the indicated fire resistance period was done. The correction factor was then mathematically added to the indicated fire resistance period, yielding the fire resistance period achieved by this specimen:

ITEM	DESCRIPTION	TEST VALUE
C	correction factor	0.02 min (1 second)
I	indicated fire-resistance period	60 min
A	area under the curve of indicated average furnace temperature for the first three fourths of the indicated period	58 542°F • min
As	area under the standard furnace curve for the same part of the indicated period	58 516°F • min
L	lag correction	3240°F • min
	FIRE RESISTANCE EXPOSURE RECEIVED BY THIS SPECIMEN ==>	60

Note: The standard specifies that the fire resistance be determined to the nearest integral minute. Consequently, if the correction factor is less than 30 seconds, and the test specimen met the criteria for the full indicated fire resistance period, no correction is deemed necessary. That was the case for this project.

CONCLUSIONS

In accordance with the assessment criteria listed in the Test Plan, all raceway systems failed to meet a 1h fire endurance period. The table below summarizes the results for each item.

Raceway	Right Rail Time to $\Delta T_{avg} \geq$ 250°F (min)	Right Rail Time to $\Delta T_{ind} >$ 325°F (min)	Left Rail Time to $\Delta T_{avg} \geq$ 250°F (min)	Left Rail Time to $\Delta T_{ind} >$ 325°F (min)	Bare #8 Time to $\Delta T_{avg} \geq$ 250°F (min)	Bare #8 Time to $\Delta T_{ind} >$ 325°F (min)	Max. Temp. Bare #8 @ 1h (F)	Burn-Through/ Structural Failure Yes/No	Pass Hose Stream Yes/ No	Final Grade Pass/ Fail
2A: 12" Tray (Direct Attach.)	36	34	27	18	32	32	1260	Yes	No	Fail
2B: 12" Tray (w/2" air gap)	37	35	38	35	33	40	1002	No	Yes	Fail
2C: 36" Tray (Direct Attach.)	41	39	34	33	35	35	1330	Yes	No	Fail
2D: 36" Tray (w/2" air gap)	32	31	33	32	28	27	1117	Yes	No	Fail
2E: Air Drop (Direct Attach.)	-	-	-	-	35	32	1712	Yes	No	Fail
2F: Air Drop (w/2" air gap)	-	-	-	-	32	28	1411	No	Yes	Fail
2G: Junct. Box (Direct Attach.)	31*	32*	-	-	-	-	n/a	Yes	No	Fail

Note: Due to the occurrences of openings in most of the tray systems, no significant increase in fire endurance due to the 2" air gap was observed. For the electrical cable air drops, the direct attachment (even with openings) performed better than the 2" air gap.

* Junction box temperatures were measured on the outside surfaces.

Appendix A

TEST PLAN

Plan for Hemyc (1-Hour) and M.T. (3-Hour) Electrical Raceway Fire Barrier Systems Performance Testing

Revision M
April 8, 2005

1 PURPOSE AND SCOPE

Section 50.48, "Fire Protection," of 10 CFR Part 50 requires that each operating nuclear power plant have a fire protection plan that satisfies General Design Criterion 3 of Appendix A to 10 CFR Part 50. Criterion 3 requires that structures, systems, and components important to safety shall be designed and located to minimize, consistent with other safety requirements, the probability and effect of fires and explosions. Noncombustible and heat resistant materials shall be used wherever practical throughout the unit, particularly in locations such as the containment and control room. Fire detection and fighting systems of appropriate capacity and capability shall be provided and designed to minimize the adverse effects of fires on structures, systems, and components important to safety. Firefighting systems shall be designed to assure that their rupture or inadvertent operation does not significantly impair the safety capability of these structures, systems, and components. Section 50.48 also requires that all plants with operating licenses issued prior to January 1, 1979, satisfy the requirements of Sections III.G, III.J, and III.O of Appendix R to 10 CFR Part 50. (Post 1979 plants (per 10 CFR Part 50.48) have to comply with the provisions of their licenses.)

Section III.G of Appendix R, which addresses fire protection of safe shutdown capability, requires that fire protection features be provided such that one train of systems necessary to achieve hot shutdown conditions remains free of fire damage. One acceptable means of satisfying this requirement is to separate cables and equipment and associated non-safety circuits of redundant systems necessary to achieve and maintain hot shutdown conditions located in the same fire area by a fire barrier having a 3-hour fire rating (Section III.G.2.a). Another means is to enclose cables and equipment and associated

non-safety circuits of one redundant train in a fire barrier having a 1-hour fire rating and install fire detectors and an automatic fire suppression system in the fire area (Section III.G.2.c).

The scope of this document is to describe the overall plan for investigating the fire resistance rating of Hemyc (1-hour) and M.T. (3-hour) electrical raceway fire barrier systems (ERFBS). The primary approach will be to perform a series of ASTM E 119 furnace tests on a number of cable raceway types that are protected by either the Hemyc (with and without air gaps) or M.T. fire barrier material. The Hemyc tests will be performed for a period of 60-minutes each, followed by a hose stream test and post-test visual inspection of the ERFBS. The M.T. test will be performed in a similar manner with the principal difference being that it will be conducted for a period of 3-hours. Descriptions of these tests and of the overall approach are provided below.

2 OBJECTIVE

The objective of this program is to assess the fire resistance rating of Hemyc and M.T. ERFBS by subjecting various test specimens (conduit, cable trays, cable drops, and junction boxes) to standard temperature-time conditions as specified in ASTM E 119 and criterion stipulated in GL 86-10, Supplement 1. The types and characteristics of the ERFBS enclosing the test specimens are intended to simulate as-installed configurations.

These tests will also provide additional data in that redundant conduits loaded to their maximum capacities with cables will be included in two of the test runs. Also, a few support structure analogs partially enclosed in the ERFBS will be exposed to the one- and three-hour test conditions.

3 APPROACH

The following sections describe the test specimens and the test conditions to be employed for the performance assessments of the Hemyc and M.T. electrical raceway fire barrier systems.

3.1 Test Specimens

The principal test specimens will include a variety of cable raceway types protected by either the Hemyc 1-hour rated ERFBS or M.T. 3-hour rated ERFBS. In one test, the test specimens will be protected with Hemyc fire barrier material directly attached to the raceway (i.e., without air gaps). The test specimens in the second test will include a mix of test specimen enclosure methods: some protected by Hemyc ERFBS framed with structural supports to provide a 5-cm (2 in) air gap between the ERFBS and the raceway and others protected with Hemyc by direct attachment. For the third test, the test specimens (of the same types included in the first test) will be protected with the M.T. ERFBS (directly attached to the raceways) and subjected to a 3-hour ASTM E 119 furnace exposure.

The types of test specimens and the configurations of the ERFBS selected for these tests are based principally on the application usage information provided to the NRC/NRR by industry (Letter: Emerson, NEI, to Frumkin, NRC/NRR, "Promatec Hemyc 1-Hour and M.T. 3-Hour Fire Barrier Systems," December 28, 2001 and via letter: Marion, NEI, to Hannon, NRC/NRR, "Comments on NRC Hemyc Test Plan," December 6, 2002). Additional correspondence addressing specific details about industry practices in Hemyc applications were also taken into account and, where practical, incorporated into the test plan (e.g., Email: Emerson, NEI, to Salley, NRC/RES, "Hemyc – Predominant Industry Practices," January 18, 2005 [a copy of this message is provided in Appendix B]).

The test protocols presented here are intended to provide bounding states of the protective material performance under standard test conditions. Also, this method is per NRC guidance, as stated in Generic Letter 86-10, Supplement 1, and represents current staff positions on bounding test approaches. Additionally, it is also required that the assembly and installation of the Hemyc and M.T. ERFBS shall be done in accordance with the vendor's specifications and meet all required vendor quality standards.

The test specimens will include the following items:

- 27-mm (1 in) Steel rigid metal conduit (RMC) arranged in a modified "U" configuration such that one vertical leg and one end of the horizontal span of the conduit intersect at a condolet LB access fitting, forming a right angle, while the other end of the horizontal span transitions to the second vertical leg via a conduit radius bend or elbow. Tests will be conducted on both "empty" and "loaded"[1] conduit configurations.
- 63-mm (2½ in) Steel rigid metal conduit (RMC) arranged in a modified "U" configuration such that one vertical leg and one end of the horizontal span of the conduit intersect at a condolet LB access fitting, forming a right angle, while the other end of the horizontal span will transition to the second vertical leg by means of a conduit radius bend or elbow. Both "empty" and "loaded" conduit configurations will be tested.
- 103-mm (4 in) Steel rigid metal conduit (RMC) arranged in a modified "U" configuration such that one vertical leg and one end of the horizontal span of the conduit intersect at a condolet LB access fitting, forming a right angle, while the other end of the horizontal span will transition to the second vertical leg through a conduit radius bend or elbow. Again, "empty" and "loaded" conduit configurations will be tested.
- A 305-mm (12 in) wide 16-gage galvanized steel ladder-back cable tray with 10 cm (4 in) high side rails and 23 cm (9 in) rung spacing. The cable tray will be constructed in a modified "U" configuration such that one vertical leg and one end of the horizontal span of the conduit intersect at a right angle, while the other end of the horizontal span will transition to the second vertical leg by means of a tray vertical curve. Only empty cable trays will undergo testing.
- A 914-mm (36 in) wide 16-gage galvanized steel ladder-back cable tray with 10 cm (4 in) high side rails and 23 cm (9 in) rung spacing. The cable tray will be constructed in a modified "U" configuration such that one vertical leg and one end of the horizontal span of the conduit intersect at a right angle, while the other end of the horizontal span will transition to the second vertical leg by means of a tray vertical curve. The cable trays will be tested without cables.
- Short cable drops consisting of a small bundle of No. 8 AWG bare copper wire suspended from the top of the furnace in a "U" loop configuration to simulate air drops.
- 46 cm x 61 cm x 20 cm (18" x 24" x 8") Steel junction boxes. The junction boxes will be suspended using supports protected by the ERFBS through direct attachment.
- Four separate support structure test elements consisting of two different cross sections (Unistrut® and square steel tube) formed into a right angle ("L")

[1] "Loaded" refers to approximately 30% of cross sectional area fill using bare #8 copper wires.

configuration and partially covered by the ERFBS. These structures are being included in the test program to evaluate the magnitude of heat transmission along their wrapped length and the possible thermal coupling effect on any supported assemblies or intervening items.

A bare #8 stranded copper wire, instrumented with thermocouples along its length, will be routed through each of the conduit test specimens and placed along the horizontal center of the cable tray test specimens and attached to the bottom of the rungs. The thermocouples will be mechanically attached to the bare copper conductor at 150-mm (6 in) spacing intervals. Additional thermocouples will be mechanically attached to the outer surfaces of the conduit test specimens and along the length of both side rails of the cable tray test specimens at 150-mm (6 in) intervals. The ends of the test specimens will be insulated with fiber filler inside and around their perimeters at the furnace-ceiling interface in accordance with the vendor's requirements.

The Hemyc ERFBS consists of blankets constructed of 38-mm (1.5 in) or 50-mm (2 in) thick, 128 kg/m^3 (8 lb/cu ft), JM Cerablanket/B&W Kaowool blanket covered with Refrasil fabric mesh on all surfaces exposed to the fire[2]. The materials are sewn together with "Astroquartz" thread. The cable tray and cable drop test specimens framed to support a 50-mm (2 in) air gap will use the 38-mm thick Hemyc covers and all direct attachment configurations will use the 50-mm thick wraps. All installation shall be in accordance with the vendor's requirements.

The M.T. three-hour ERFBS is virtually identical in concept and uses the same basic materials in construction as Hemyc, but the M.T. also has an internal layer of a heat-activated compound.

PCI Promatec, Inc. has been contracted to fabricate and install the Hemyc and M.T. materials on all of the test specimens.

[2] Previous versions of this test plan called for the use of Siltemp 84CH and 84SR fabric, however the manufacturer of Siltemp is no longer in business and Siltemp is no longer manufactured. Refrasil is an approved material for the fabrication of Promatec protective wrap components and will thus be used as the outer fabric for the Hemyc barriers for these tests.

Table 1 presents the test conditions to be investigated in terms of ERFBS type and configuration for each of the test specimens during the three tests. Conduits will not be tested in the air gap framed configuration and no cable trays will be tested with M.T.

Detailed construction drawings of each of the test specimens are provided in the appendix to this plan. The drawings define the specific details of the design and assembly of each test specimen. Promatec will provide separate drawings detailing the installation of the designated ERFBS. Drawings and descriptions of the dimensions and setup configurations in the furnace and instrumentation details are provided. The fabrication and installation of the ERFBS will be performed in accordance with vendor procedures. Provisions will be made to verify that all material/installation quality requirements are met.

Table 1: Test Matrix

	Test #1	**Test #2**	**Test #3**
	Hemyc (1-Hour, Direct Attachment)	Hemyc (1-Hour, Framed for Air Gap and Direct Attachment)	M.T. (3-Hour, Direct Attachment)
27-mm (1-in) Conduit[1]	X	(Not included)	X
63-mm (2½-in) Conduit[1]	X	(Not included)	X
103-mm (4-in) Conduit[1]	X	(Not included)	X
305-mm (12-in) Tray	(Not included)	X	(Not included)
914-mm (36-in) Tray	(Not included)	X	(Not included)
Junction Box[2]	X	X	X
Cable Drop	(Not included)	X	X
Unistrut Support	X	(Not included)	X
Tube Steel Support	X	(Not included)	X

[1] Conduit test specimens will be tested under both “empty” and “loaded-with-cable” conditions.
[2] Only a single junction box will be included in Test #2 that will be enclosed in Hemyc by Direct Attachment secured with metal bands.

Sandia National Laboratories will procure the required materials for the test specimens. The type of material and equipment obtained will include raceways (conduit, trays,

condolets, and junction boxes), metal to fabricate the support structure specimens, and miscellaneous hardware (nuts, bolts, screws, etc.) plus spare parts. Promatec will be responsible for QA of the Hemyc and M.T. materials and ERFBS installation.

The test laboratory will construct the test specimens in accordance with the detailed construction drawings. The process will include the positive mechanical fastening of the thermocouples to the outer surfaces of the test specimens and checkout for proper operation prior to the installation of the ERFBS. The test laboratory will also be responsible for installation of the instrumented bare #8 copper wire and the additional conductors within the raceways. Table 2 indicates the number of bare #8 conductors to be installed in the "loaded" conduit test specimens. The individual weights of the assembled, but empty, test specimens will be recorded prior to attachment to the test deck. Similarly, the weights of the bare #8 copper wire bundles will also be recorded prior to installation in the selected conduits. The resulting mass per unit length will be used as a first-order basis for determining the influence of cable loading on thermal response of the raceways. The test laboratory will be responsible for QA of the furnace temperatures and test operations. The laboratory will provide logs and record instrument data during the tests.

Table 2: Number of No. 8 Bare Conductors Routed in Loaded Conduit.

Loaded Test Specimens	No. bare #8 stranded wires	Approximate mass per unit length of wire
103-mm (4") Conduit	291	21.72 kg/m (14.58 lb/ft)
63-mm (2½") Conduit	113	8.45 kg/m (5.68 lb/ft)
27-mm (1") Conduit	18	1.38 kg/m (0.95 lb/ft)
Cable Drops	7	0.70 kg/m (0.50 lb/ft)

Photographs and documented written logs of the test specimens, both during and after assembly, shall be prepared by the testing laboratory prior to testing and included as part of the test QA documentation for the final test report.

PCI Promatec, Inc., through a contract with Sandia National Laboratories, will be responsible for fabricating and installing the ERFBS materials on the test specimens following construction, instrumentation and mounting on the test deck.

3.2 Assessment Criteria

The test specimens will be subjected to the ASTM E 119 temperature-time profile in the test furnace. An assessment of the ERFBS performance will be based on two principal factors, as stated in Generic Letter 86-10, Supplement 1:

1. *The time at which the average unexposed side temperature of the fire barrier system, as measured on the exterior surface of the raceway or component, exceeds 139 C (250 F) above its initial temperature. Or the time at which a single temperature reading of a test specimen exceeds 30% of the maximum allowable temperature rise (i.e., 181 C [325 F]) above its initial temperature.*
2. *The fire barrier system remains intact during the fire exposure and water hose stream test without developing any openings through which the cable raceway is visible.*

3.3 Test Facilities

The furnace tests will be conducted at Omega Point Laboratories (OPL), located in Elmendorf, Texas. OPL has a full-scale horizontal furnace that fully satisfies the requirements of this test plan. It is 3.7 m (12 ft) wide by 5.5 m (18 ft) long and 2.1 m (7 ft) deep equipped with twelve propane burners. The furnace has been demonstrated to produce the ASTM E 119 standard time-temperature profile.

The test furnace is located in a 18 m (60 ft) by 61 m (200 ft) by 9 m (30 ft) high building. This building has ample room for test specimen assembly and fire barrier installation activities prior to placement inside the furnace.

3.4 Primary Tests

Three separate test runs will be conducted as part of the primary test series. Two of the tests will test the performance of 1-hour rated Hemyc ERFBS and the third test will assess the performance of 3-hour rated M.T. ERFBS. All of the primary tests will be conducted using the ASTM E 119 standard time-temperature curve (Figure 1). The furnace calibration shall be within ASTM E 119 requirements and the calibration documentation included in the final test report. All thermocouples used in the testing (furnace and test specimens) shall be within ASTM E 119 requirements and the calibration documentation included in the final report.

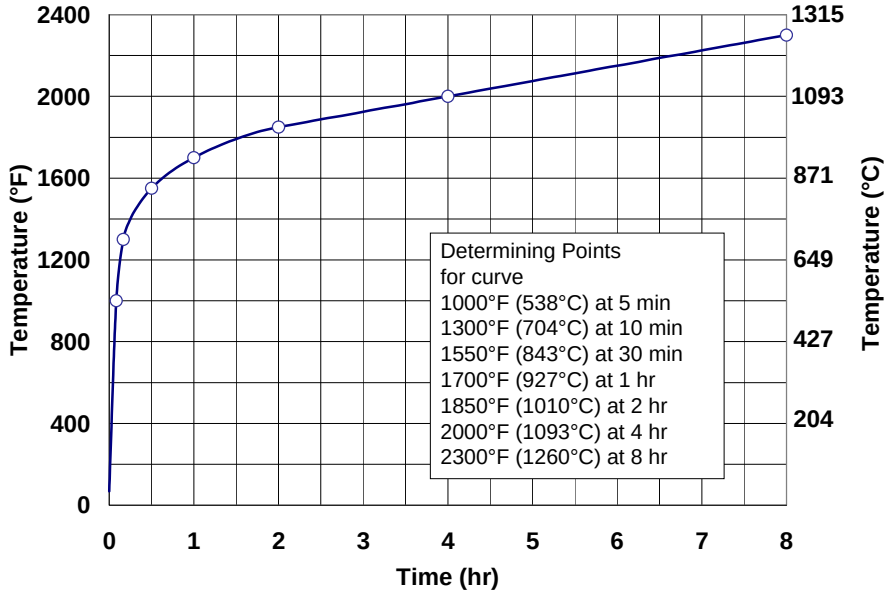

Figure 1. The Standard Time-Temperature Curve (based on data provided in ASTM E 119 – 00a.

As indicated above, these tests will be governed by the conditions provided in this test plan. The test specimens will consist of those items described in Section 3.1. The specific setup and configuration for each test is discussed below.

The Hemyc material will use Refrasil fabric on both the internal and external covering. Stainless steel bands will be used for attachment (i.e., no finger straps will be used). The spacing of the bands will be per Promatec's maximum spacing requirements. Standard 96 – 128 kg/m^3 (6 – 8 lb/ft^3) density ceramic fiber material will be used to construct the Hemyc wraps. The 27-mm (1-in) empty conduit, 63-mm (2½-in) loaded conduit and the 103-mm (4-in) conduit (empty and loaded) will all employ butt joints with 150-mm (6 in) wide collar over wraps. The 27-mm (1-in) loaded conduit and the 63-mm (2½-in) empty conduit will employ 50-mm (2-in) overlap joints. All cable trays will use the overlap joint method. In addition, the cable drop with the 50-mm (2-in) air gap will use the overlap method for sealing the material joints while the cable drop without the air gap will use collars to cover the butt joints.

3.4.1 Test #1

The first test of the series will be conducted on nine test specimens with Hemyc ERFBS directly attached to the raceways (i.e., without framework to provide air gaps between the fire barrier material and raceways). The nominal thickness of the Hemyc will be 50 mm (2 in).

Figure 2 shows one possible configuration of the test specimens inside the furnace. As indicated in the figure, the test specimens include:

- A 103-mm (4 in) conduit without additional cables,
- A 103-mm (4 in) conduit loaded with the maximum (30% of conduit's cross-sectional area) fill of cables,
- A 27-mm (1 in) conduit and condolet LB assembly without cables,
- A 27-mm (1 in) conduit and condolet LB assembly with additional cables (30% fill),
- A 63-mm (2½ in) conduit and condolet LB assembly with no cables,
- A 63-mm (2½ in) conduit and condolet LB assembly with cables (30% fill),
- A 46 cm X 61 cm X 20 cm (18" x 24" x 8") junction box,
- A partially protected Unistrut® support assembly, and
- A partially protected 5 cm x 5 cm (2" x 2") square steel tube support assembly

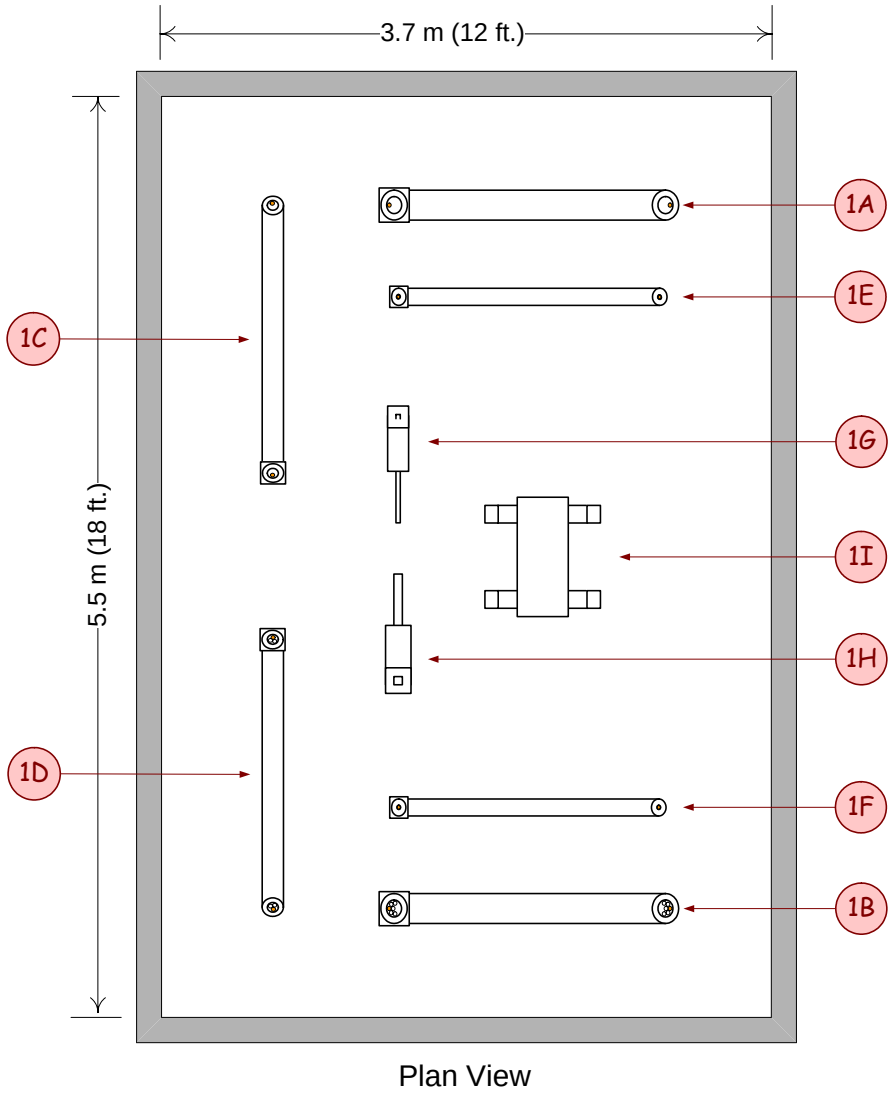

Figure 2. Example of Test Specimen Layout during Test #1 (Hemyc, Direct Attachment Configurations).

This arrangement of the test specimens is intended to maximize thermal exposures and minimize the potential for one specimen to influence the response of another specimen to the thermal environment (i.e., minimize shadowing).

The conduit will be supported from the furnace ceiling in a modified "U" configuration. The metal test deck will be adequately insulated to prevent interaction with the portion of the test specimens located outside the furnace and to protect the metal deck from structural failure during the 1-hour test. Each conduit will include one sharp 90-degree transition from the horizontal span to one of the vertical legs; a condolet fitting will be employed to provide the right angle transition from horizontal to vertical. At the other transition point a radius bend will be used. The two vertical runs of these test articles will be approximately 0.9 m (36 in) along each leg and the horizontal span will be approximately 1.5 m (60 in) (See Figures A1, A2, and A3 in Appendix A). The ERFBS will completely cover the test specimens within the furnace and extend through the test deck for a distance of 15 to 30 cm (6 – 12 in) above the test deck (See Figure A19 in Appendix A). All raceway supports shall be outside the furnace and shall not interfere with the ERFBS during testing.

A Hemyc ERFBS will be directly attached to the support structure analogs such that 30 cm (12 in) of their horizontal sections are exposed to the furnace environment. The junction box will be suspended from the test deck by Unistrut support members and protected with Hemyc through direct attachment (See figure A6 in Appendix A).

The vertical run of the Unistrut will be approximately 0.9 m (36 in) inside the furnace and the horizontal run will be 0.6 m (24 in) (See figure A8 in Appendix A).

The vertical run of the 5 cm x 5 cm (2 in. x 2 in) tube steel will be approximately 0.9 m (36 in) below the test deck and the horizontal run will be 0.6 m (24 in) (See figure A7 in Appendix A).

3.4.2 Test #2

The second test will be conducted on seven test specimens, which will be protected with Hemyc ERFBS. Two of the cable trays and one cable drop will incorporate the necessary framework to provide a minimum of 50-mm (2 in) air gaps between the ERFBS and item. The nominal thickness of the Hemyc ERFBS enclosing the framed components will be 38 mm (1½ in). The remaining two cable trays, cable drop and junction box will be protected with directly attached (i.e., without air gap framework) Hemyc with a nominal wrap thickness of 50-mm (2 in).

One possible arrangement of the test specimens in the furnace during Test #2 is shown in Figure 3. The seven test specimens will include:

- A 914-mm (36 in) cable tray framed for 50-mm (2”) air gap,
- A 914-mm (36 in) cable tray employing direct attachment of the Hemyc,
- A 305-mm (12 in) cable tray framed for 50-mm air gap,
- A 305-mm (12 in) cable tray employing direct attachment of the Hemyc,
- A small cable drop loop employing direct attachment of the Hemyc,
- A 46 cm x 61 cm x 20 cm (18" x 24" x 8") junction box employing direct attachment of the Hemyc suspended from the top of the furnace with separately protected (direct attachment, ceramic fiber blanket) supports, and
- A small cable drop loop framed for 50-mm air gap.

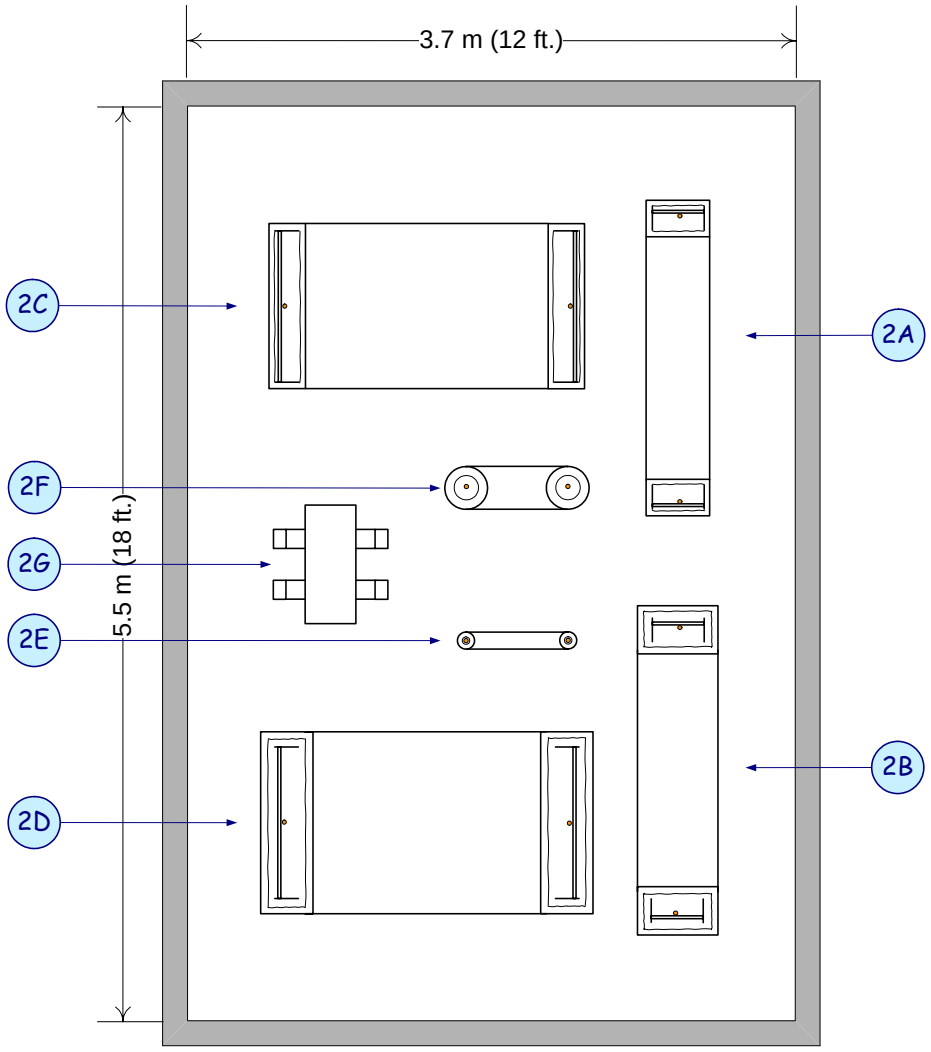

Plan View

Test #2 Configuration Layout
Test Specimens Protected in Hemyc

2A – 305 mm (12") Cable Tray (direct attachment)
2B – 305 mm (12") Cable Tray (5 cm [2"] Air Gap)
2C – 914 mm (36") Cable Tray (direct attachment)
2D – 914 mm (36") Cable Tray (5 cm [2"] Air Gap)
2E – Cable Drop Loop (direct attachment)
2F - Cable Drop Loop (5 cm [2"] Air Gap)
2G – 46 cm X 61 cm X 20 cm (18" X 24" X 8") Junction Box (suspended by supports, enclosed in Hemyc by direct attachment)

73766-0002
Rev. 04
03/31/2005

Figure 3. Example of Test Specimen Layout during Test #2 (Hemyc, Framed for 50-mm (2”) Air Gap and Direct Attachment Configurations).

The cable trays will be supported from the furnace ceiling in a modified "U" configuration. The metal test deck of the test specimens will be adequately insulated to prevent interaction with the portion of the test specimens located outside the furnace and to protect the metal deck from structural failure during the 1-hour test. Each tray will include one sharp 90-degree transition from the horizontal span to one of the vertical legs. At the other transition a radius bend will be used. The cable trays will be modified and assembled to accommodate the right angle turn. The two vertical runs of these test articles will be approximately 0.9 m (36 in) along each leg inside the furnace and the horizontal span will be approximately 1.5 m (60 in) (See Figures A4 and A5 in Appendix A). The ERFBS will completely cover the test specimens within the furnace and extend through the test deck for a distance of 15 to 30 cm (6 – 12 in) above the test deck (See Figure A20 in Appendix A). All raceway supports shall be outside the furnace and shall not interfere with the ERFBS during testing.

The junction box will be supported from the furnace ceiling by Unistrut® channels (See Figure A6 in Appendix A). The junction box supports will be directly protected with a ceramic fiber blanket separately from the box.[3] (Note: The junction box supports are not considered as part of this test and will not be instrumented; however any failure in their performance during the test will be noted and investigated as deemed appropriate.) Two wrapped cable bundles (one with air gap, the other without) will be dropped through the top of the furnace and looped in the furnace and routed back up through the test deck (See figure A9 in Appendix A).

3.4.3 Test #3

The final test will be conducted on ten test specimens, all of which will be wrapped with the M.T. 3-hour rated ERFBS without any framework to provide air gaps between the wrap and raceway. The nominal thickness of the M.T. ERFBS will be approximately

[3] The junction box supports were protected with 50-mm (2") thick raw ceramic fiber blankets (not Hemyc) in Test #2 and kept thermally isolated from the box.

133 mm (5¼ in) for the cable drop. The nominal M.T. thickness for conduits and junction boxes will be 95 mm (3¾ in).

Figure 4 shows a possible configuration of the test specimens in the furnace during Test 3. The test specimens protected with M.T. during Test #3 will include:

- A 103-mm (4 in) conduit without additional cables,
- A 103-mm (4 in) conduit loaded with the maximum fill (30%) of cables,
- A 27-mm (1 in) conduit and condolet LB assembly without cables,
- A 27-mm (1 in) conduit and condolet LB assembly with additional cables (30% fill),
- A 63-mm (2½ in) conduit and condolet LB assembly with no cables,
- A 63-mm (2½ in) conduit and condolet LB assembly with cables (30% fill),
- A small cable drop loop,
- A partially protected Unistrut® support assembly,
- A partially protected 5 cm x 5 cm (2” x 2”) square steel tube support assembly, and
- A 46 cm X 61 cm X 20 cm (18" x 24" x 8") junction box

As in the other two tests, the conduit assemblies will be supported from the furnace ceiling in a modified “U” configuration. The metal deck of the test specimens will be adequately insulated to prevent interaction with the portion of the test specimens located outside the furnace and to protect the metal deck from structural failure during the 3-hour test. Each conduit will include one sharp 90-degree transition from the horizontal span to one of the vertical legs and a radius bend will be used for the other transition. A condolet fitting will be employed to provide the right angle turn. The two vertical runs of these test articles will be approximately 0.9 m (36 in) along each leg inside the furnace and the horizontal run will be approximately 1.5 m (60 in) (See Figures A1, A2, and A3 in Appendix A). The ERFBS will completely cover the test specimens within the furnace and extend through the test deck for a distance of 15 to 30 cm (6 – 12 in) above the test deck (See Figure A19 in Appendix A). All raceway supports shall be outside the furnace and shall not interfere with the ERFBS during testing.

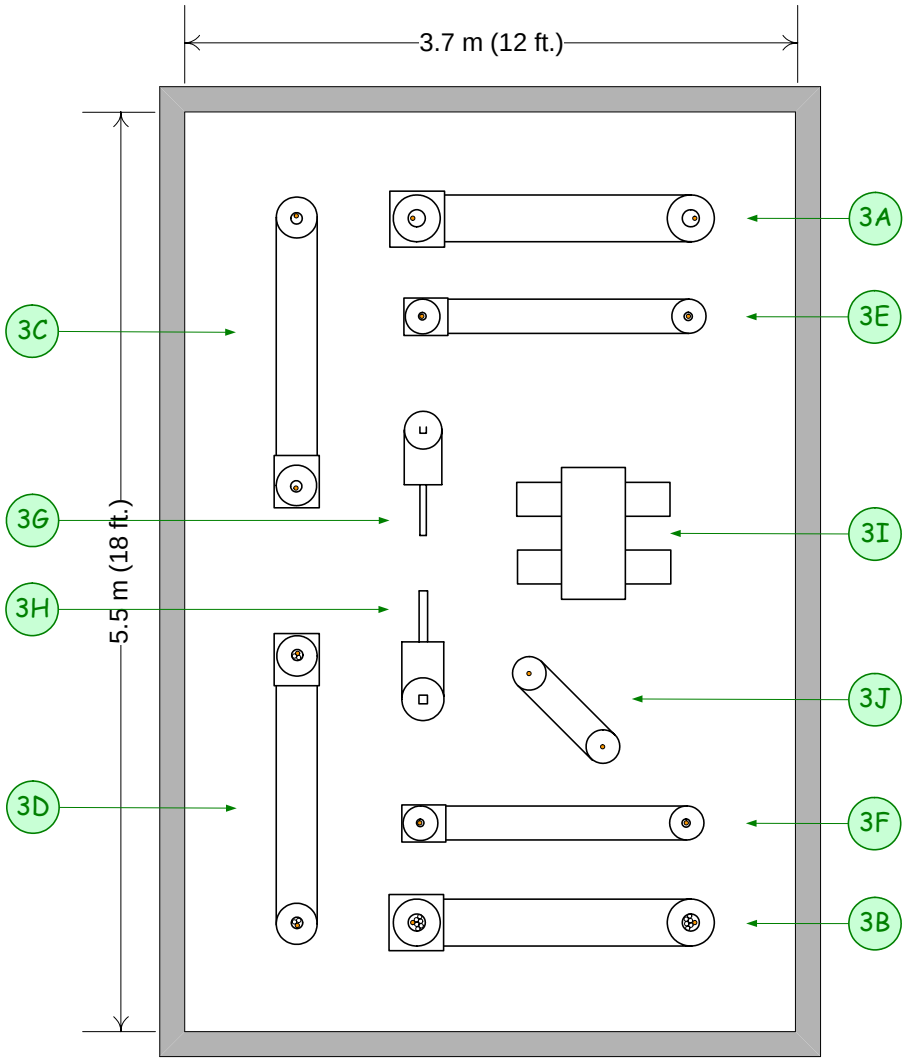

Figure 4. Example of Test Specimen Layout during Test #3 (M.T., Direct Wrap Configurations).

An M.T. ERFBS will be directly attached to the support structure analogs such that 30 cm (12 in) of their horizontal sections are exposed to the furnace environment. The junction box will be suspended from the test deck by Unistrut support members and protected with M.T. through direct attachment (See figure A6 in Appendix A).

The vertical run of the Unistrut will be approximately 0.9 m (36 in) within the furnace and the horizontal run will be 0.6 m (24 in) (See figure A8 in Appendix A).

The vertical run of the 5 cm x 5 cm (2 in. x 2 in) tube steel will be 0.9 m (36 in) in the furnace and the horizontal run will be 0.6 m (24 in) (See figure A7 in Appendix A).

One wrapped cable bundle will be dropped through the top of the furnace and looped in the furnace and routed back up through the test deck (See figure A9 in Appendix A).

3.5 Conduct of Tests

Each of the primary test runs will be conducted by exposing the test specimens to the time-temperature curve (Fig. 1) as specified in ASTM E 119, Standard Test Methods for Fire Tests of Building Construction and Materials. By this method, the temperature inside the furnace should reach 927 C (1700 F) at the end of the one-hour tests and 1052 C (1925 F) at the end of the 3-hour test. Figure 1 shows the desired temperature profile as a function of time. The time-temperature curve shall be maintained within the limits established in ASTM E 119.

Upon completion of each ASTM E 119 temperature run (one-hour and three-hours), the complete test assembly will be removed from the furnace and a hose stream will be applied to all of the test articles. The hose stream test will consist of a water stream applied at random to all exposed surfaces of the test specimens through a 38-mm (1½ in) fog nozzle set at a discharge angle of 15 degrees with a nozzle pressure of 517 kPa (75 psi) at a minimum discharge rate of 284 lpm (75 gpm) with the tip of the nozzle at a

maximum distance of 3 m (10 ft) from the test specimen. The hose stream application will be continued for at least 5 minutes upon completion of the test.

A visual inspection of all test articles will be conducted following the hose stream test. The purpose of the inspection will be to ascertain whether the ERFBS remained intact during the fire exposure and the cooling and mechanical impact of the hose stream test without developing any openings or breaches. Visible indications of an opening will include obvious tears or displacement of a barrier section or a view of the covered raceway through the fire barrier.

Photographs and video of the test specimens, both prior to and after disassembly, will be taken during the post-test inspection and recorded as part of the test documentation.

3.6 Instrumentation and Data Collection

The primary data to be generated in these tests will be component temperatures as indicated by insulated 24-gage Type-K thermocouples (Special Limit 32 to 2282°F range and 2°F or 0.4% tolerance value per ASTM E230-ANSI MC 96.1). The junction box temperatures will be monitored using Type-K thermocouples sheathed in Inconel. These thermocouples have been calibrated and certified to accuracies within 4°F of the comparison standard over a temperature range of 70°F to 1000°F. Test #1 will require the use of approximately 380 thermocouples to monitor the test specimen temperatures. Test #2 will require about 335 thermocouples. Approximately 400 thermocouples will be needed for Test #3. The outputs of the thermocouples will be sent to a computerized data collection unit for recording and storage. Each thermocouple's output will be recorded at least once per minute. It is expected that Teflon-coated thermocouples will be used during Test #3 to ensure that there will not be interference from any gases evolving from the M.T. ERFBS.

Figures A10 through A18 in Appendix A show the preferred attachment locations of the thermocouples on the test specimens. Routing the thermocouples for monitoring the tray temperatures will be by laying the bundles in the tray at the entry point and branching the

thermocouples off for mechanical attachment to the tray rails and bare copper conductor at the appropriate locations (See figures A13 and A14 in Appendix A). Similarly, for the cable drop thermocouples, the thermocouples will be bundled with the cable drop cables at the points of entrance and exit at the ceiling of the furnace and branching off the thermocouples for attachment to the bare copper conductor wire at 150-mm (6 in) spacing intervals (See figure A18 in Appendix A).

Each conduit will have thermocouples mechanically fastened to the side or bottom surface located along the outside perimeter of the "U" shape (See Figures A10, A11, and A12, in Appendix A). The routing of thermocouples for monitoring the temperature of the conduit will require that a series of small thermocouple bundles be placed around the circumference of the conduit and run to their individual attachment locations between the conduit and ERFBS. In order to minimize the effect of these small bundles on the test results, the conduit thermocouples will be run in underneath the ERFBS from both ends of the test specimen. The bare copper wire routed through the interior of each conduit test specimen will be instrumented with thermocouples installed with a maximum spacing of 150-mm (6 in) along its length. The junction boxes and condolet fittings will have at least one thermocouple attached to each side located at or as closely as possible to the geometric center of the side walls.

Note that the thermocouple locations indicated in these figures are for information purposes only. The thermocouples will be installed, except as noted, at 150-mm (6 in) intervals along the conduits, cable tray rails, and bare #8 copper wires in accordance with the guidance provided in Supplement 1 to Generic Letter (GL) 86-10. The instrumented bare #8 copper wire will be embedded within the copper wire bundles of the "loaded" raceways to protect the thermocouples from physical damage when the bundles are pulled through the raceways. Thermocouples will be attached to the raceway vertical legs located 25-mm (1 in) above the top of the test deck and 25-mm (1 in) below the exposed surface of the insulation on the bottom of the test deck.

3.7 Follow-on Tests

The decision to plan and conduct follow-on tests will be made by NRC (RES) on the basis of the primary test results.

4 REPORTING AND DOCUMENTATION

For each test conducted, the testing laboratory shall produce a draft report within two weeks of completion of the test. Each draft report (including electronic data and color photographs) will be submitted to SNL for a one-week comment period. The draft report will contain a summary of the thermocouple data and a simple analysis on the effects of cable mass on ERFBS performance. Upon receipt of comments, the test laboratory shall issue the final test report within two weeks to SNL. The final report shall contain all thermocouple data (including plots and location maps), QA documentation and construction drawings and ERFBS installation details. Thermocouple data plots will include graphs of (1) each individual temperature monitored during the test, (2) graphs of the average and maximum temperatures recorded for each test specimen exterior surface as a function of time, and (3) graphs of the average and maximum temperatures recorded for each test specimen instrumented bare #8 conductor as a function of time. SNL shall review the final report for accuracy and transmit the complete laboratory report to NRC (RES) within one week.

The test data will be analyzed and the fire barrier performance will be evaluated based on the acceptance criteria.

It should be recognized that the possibility exists that these test results may form the technical basis for broad acceptance of these fire protection systems by NRC, or provided the basis for enforcement action or backfit requirements, as deemed appropriate.

5 REFERENCES

10 CFR, Part 50, Appendix R, Fire Protection Program for Operating Nuclear Power Plants.

Supplement 1 to Generic Letter 86-10, Fire Endurance Test Acceptance Criteria for Fire Barrier Systems used to Separate Redundant Safe Shutdown Trains within the Same Fire Area, March 25, 1994.

ASTM E 119 – 00a, Standard Test Methods for Fire Tests of Building Construction and Materials.

A Test Specimen Configuration Details and Thermocouple Location Plan

These diagrams are not to scale and indicate test specimens assembly and thermocouple installation details for illustrative purposes only.

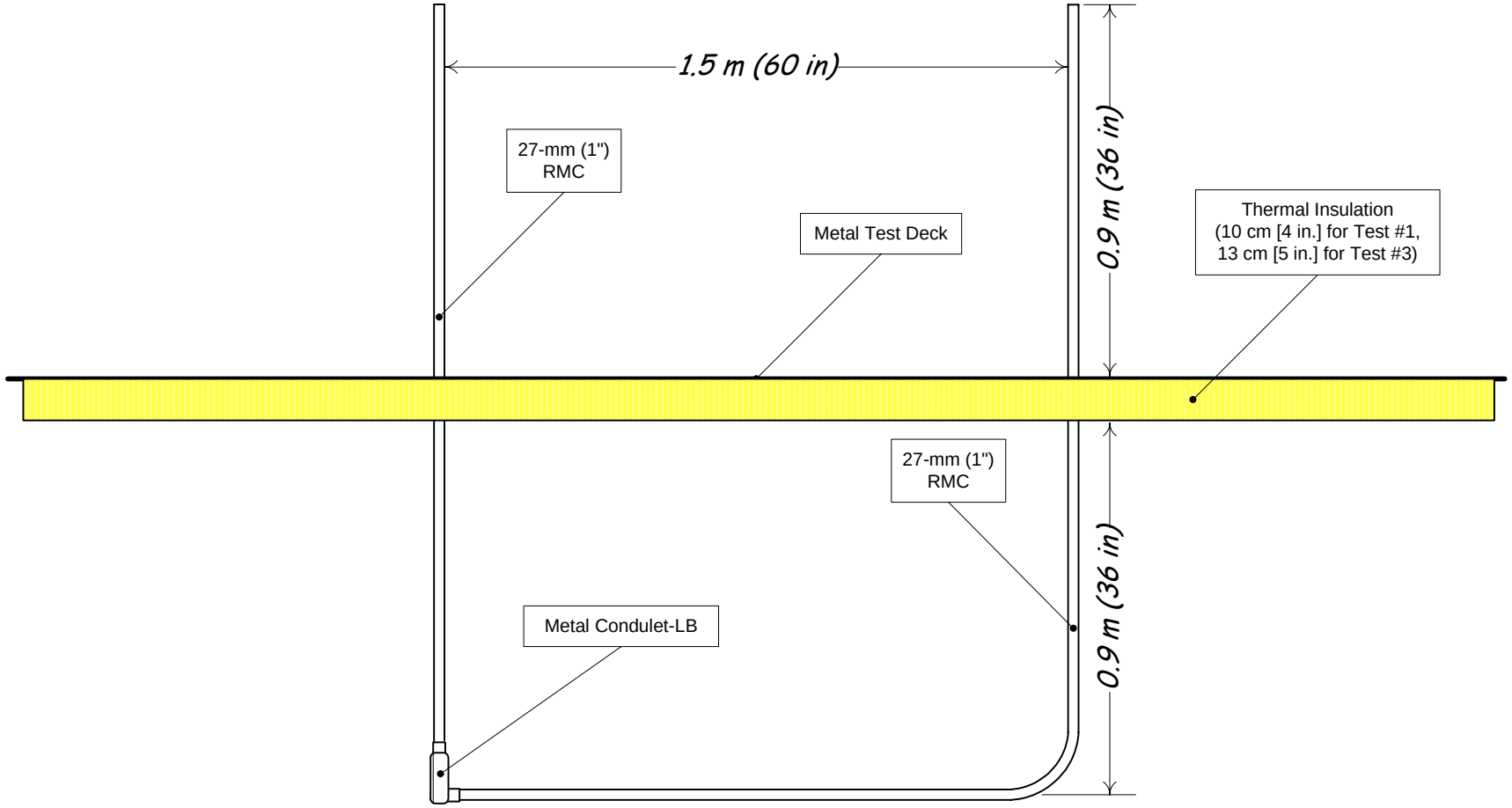

Figure A1: 27-mm (1-in) rigid metal conduit test specimens (side view with dimensions).

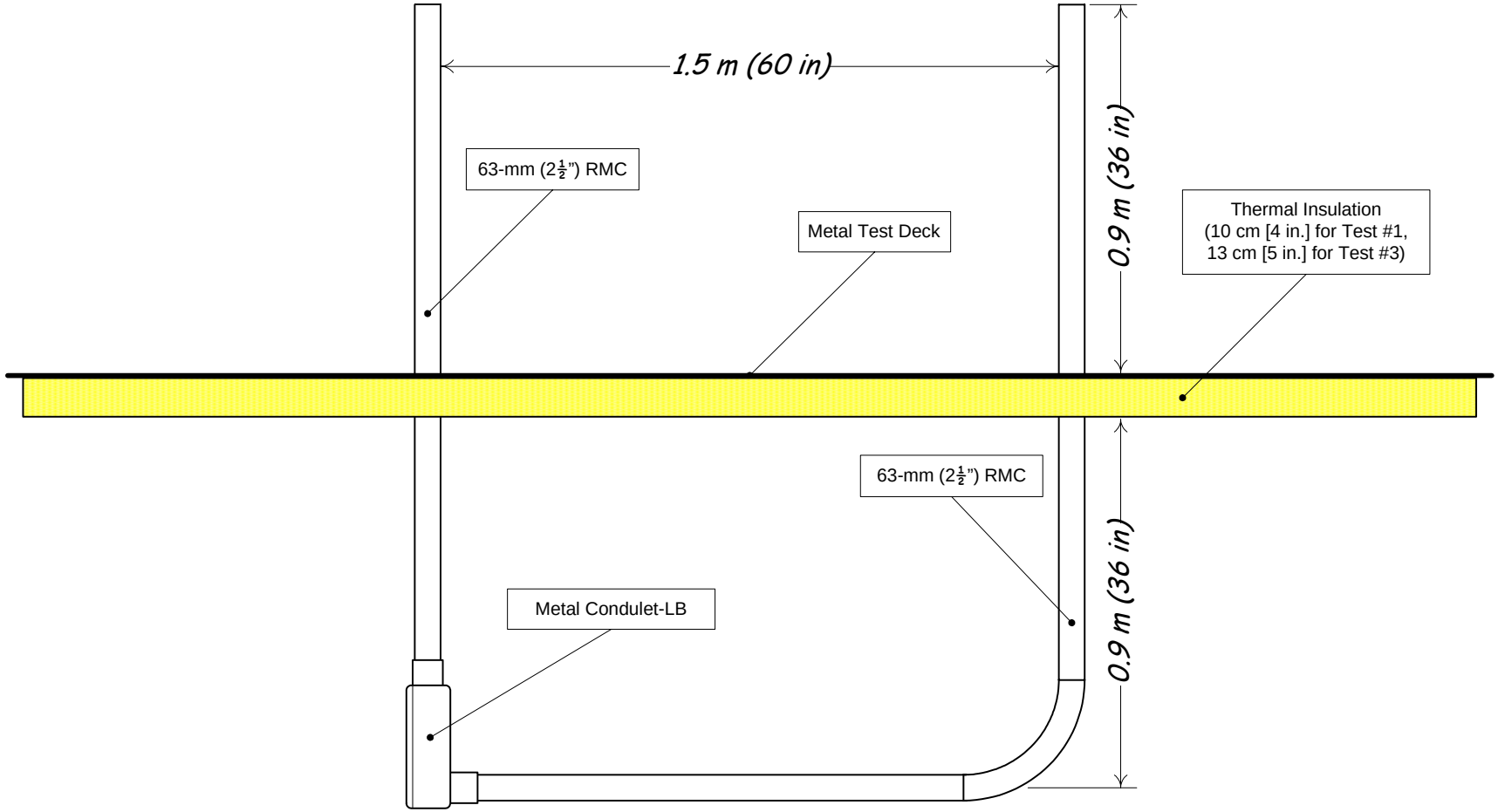

Figure A2: 63-mm (2½-in) rigid metal conduit test specimens (side view with dimensions).

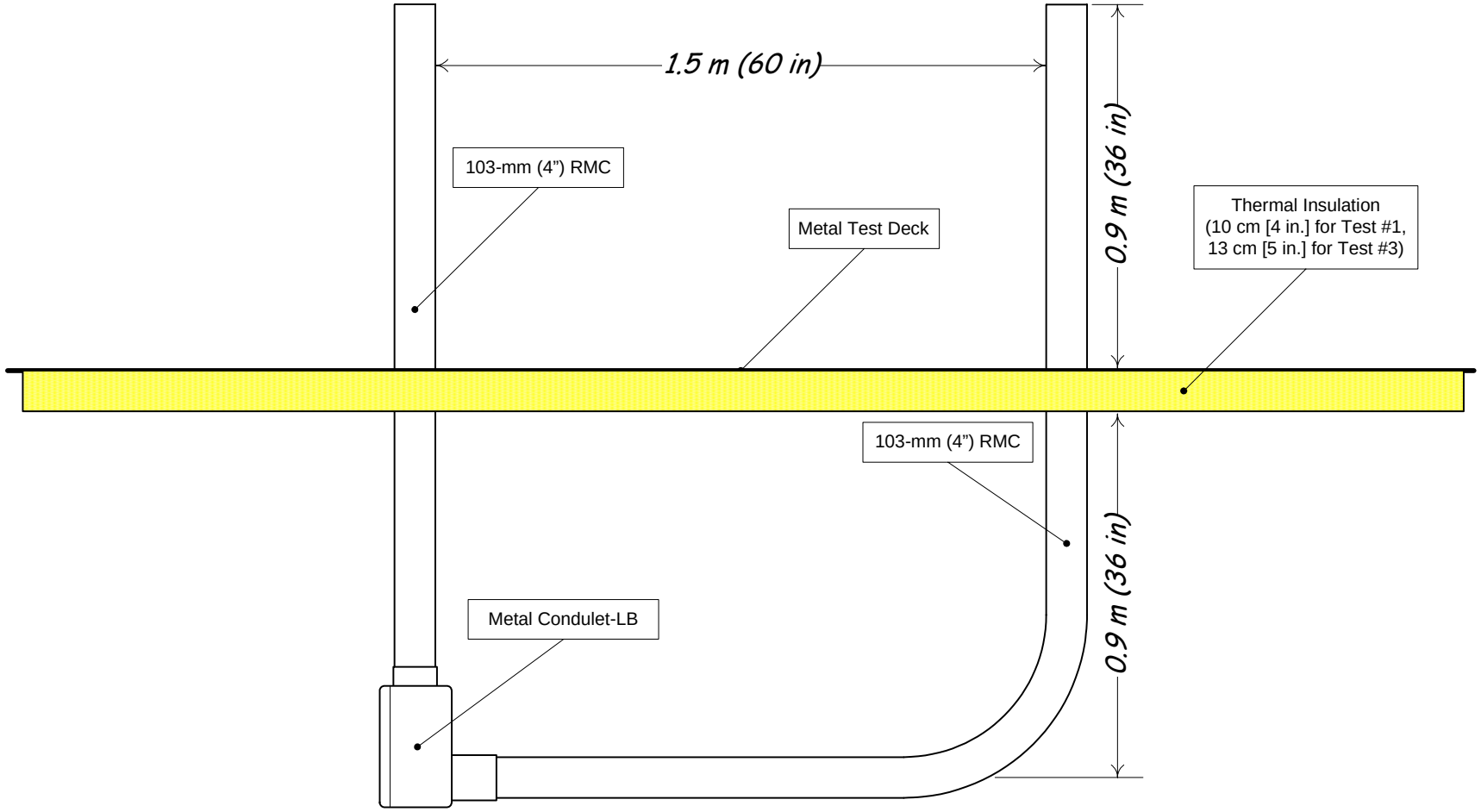

Figure A3: 103-mm (4-in) rigid metal conduit test specimens (side view with dimensions).

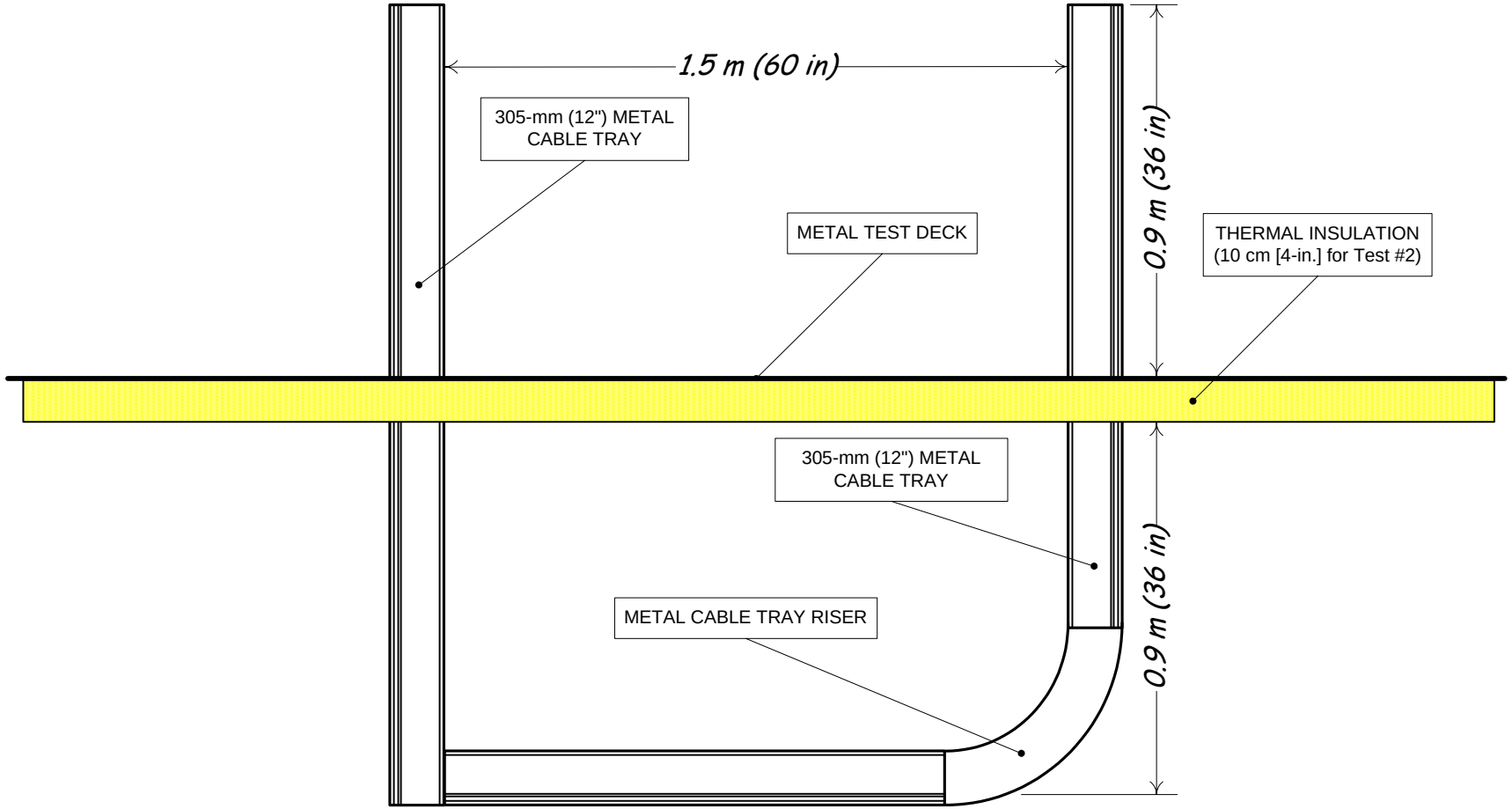

Figure A4: 305-mm (12-in) cable tray test specimens (side view with dimensions). Cable trays will be ladder type, 18-gage galvanized steel with 10 cm (4 in) high side rails and 23 cm (9 in) rung spacing.

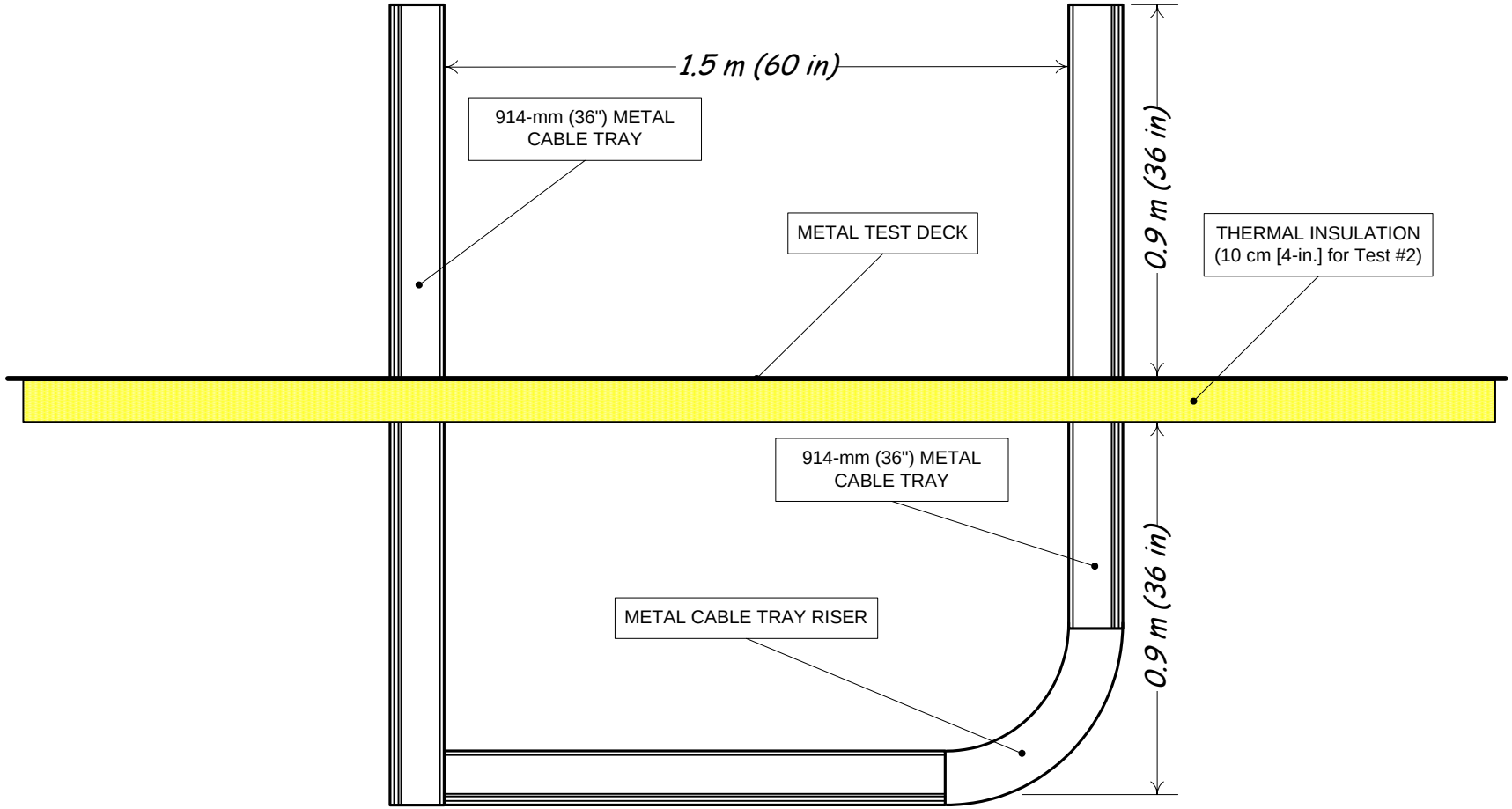

Figure A5: 914-mm (36-in) cable tray test specimens (side view with dimensions). Cable trays will be ladder type, 18-gage galvanized steel with 10 cm (4 in) high side rails and 23 cm (9 in) rung spacing.

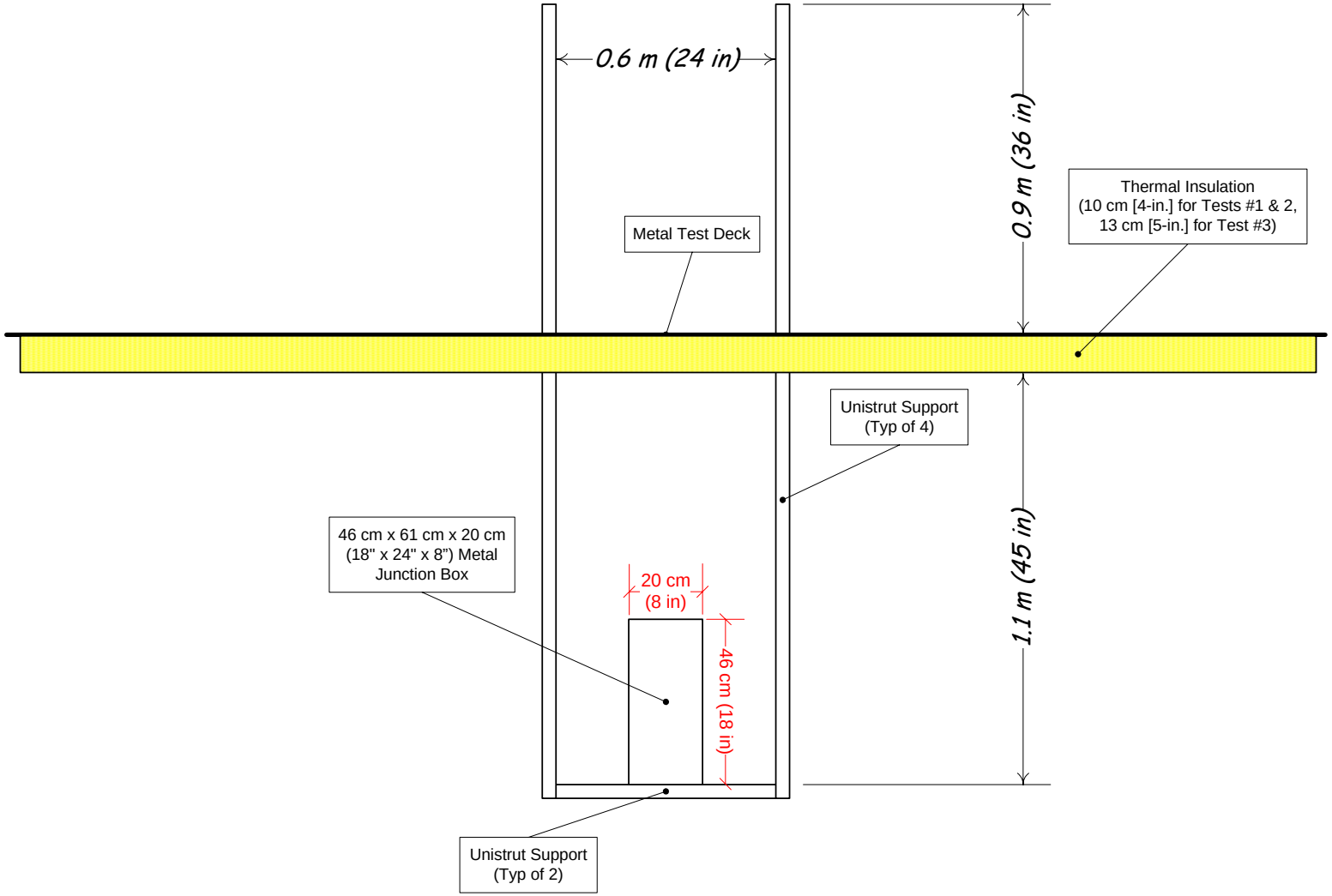

Figure A6 (a): Junction box test specimens (front elevation view with dimensions).

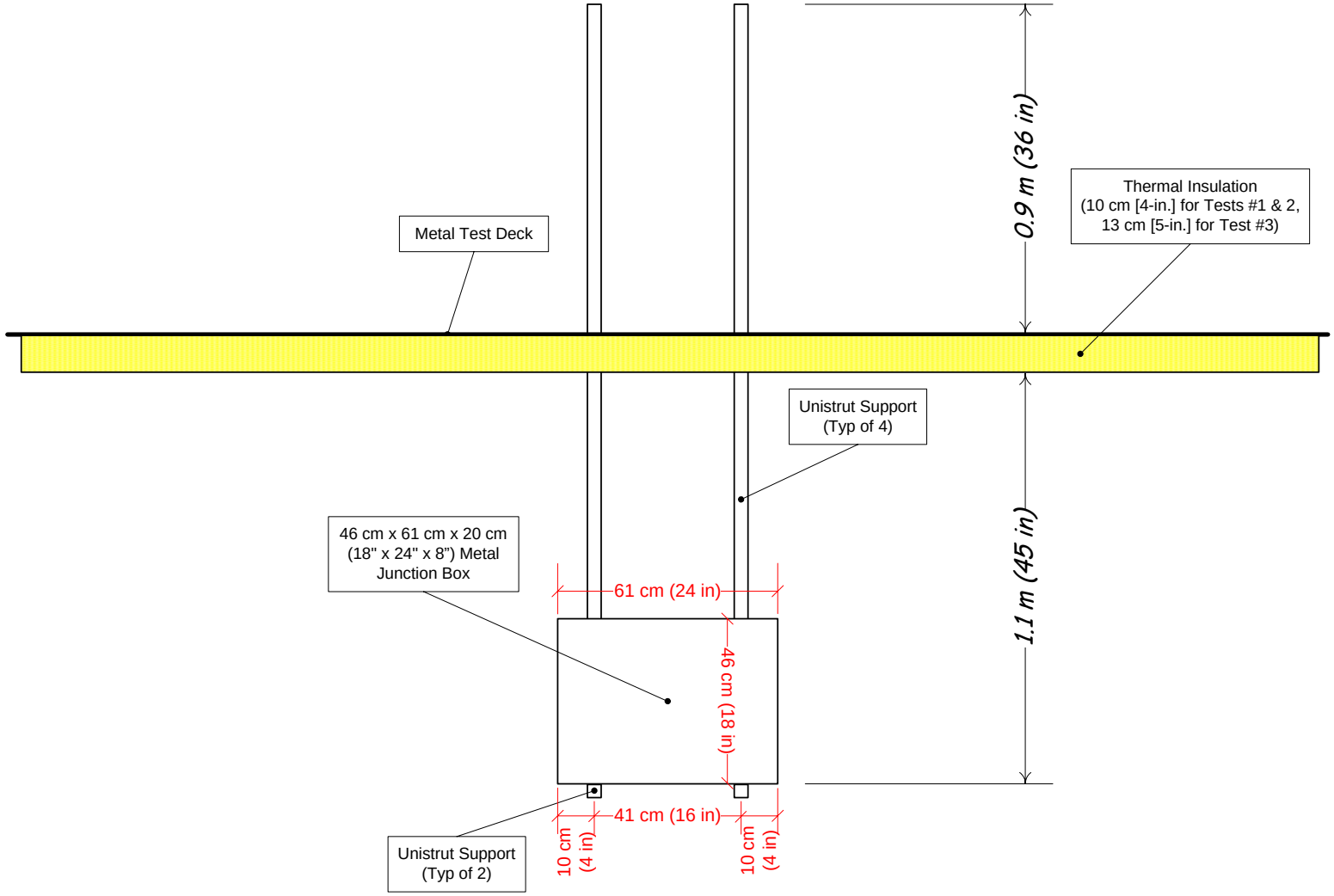

Figure A6 (b): Junction box test specimens (side elevation view with dimensions).

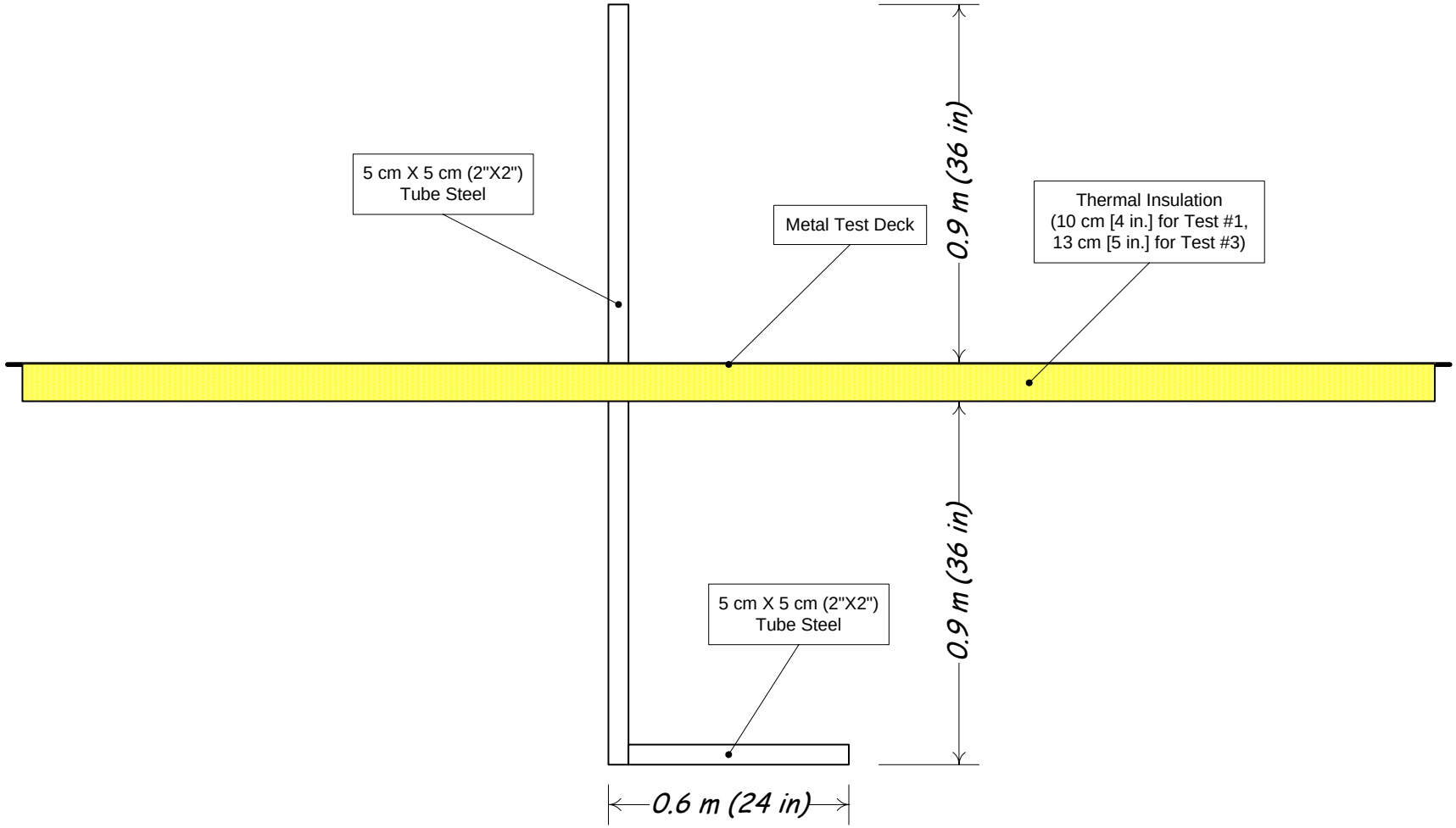

Figure A7: Tube steel support structure test specimens (side view with dimensions).

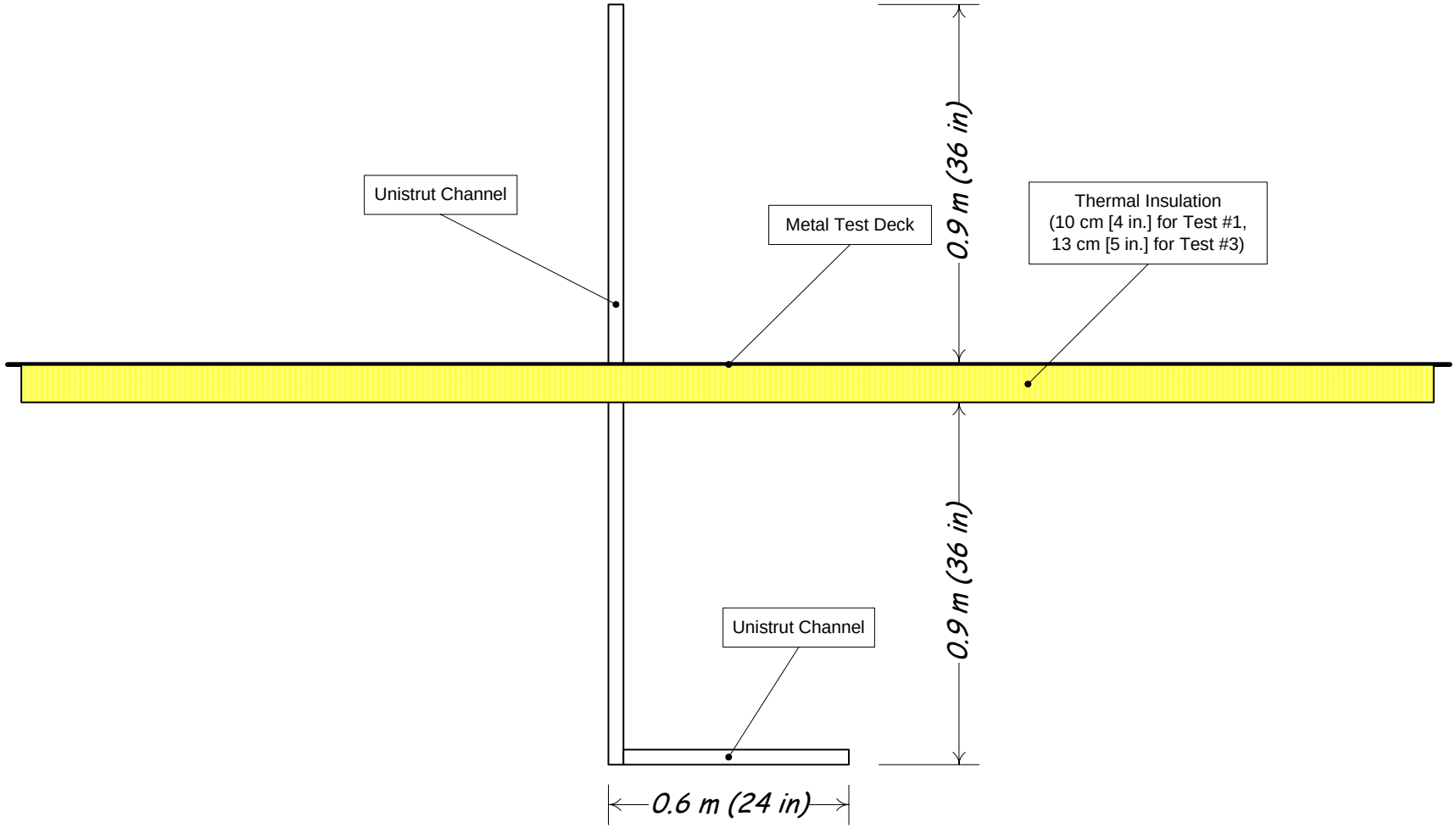

Figure A8: Unistrut® support structure test specimens (side view with dimensions).

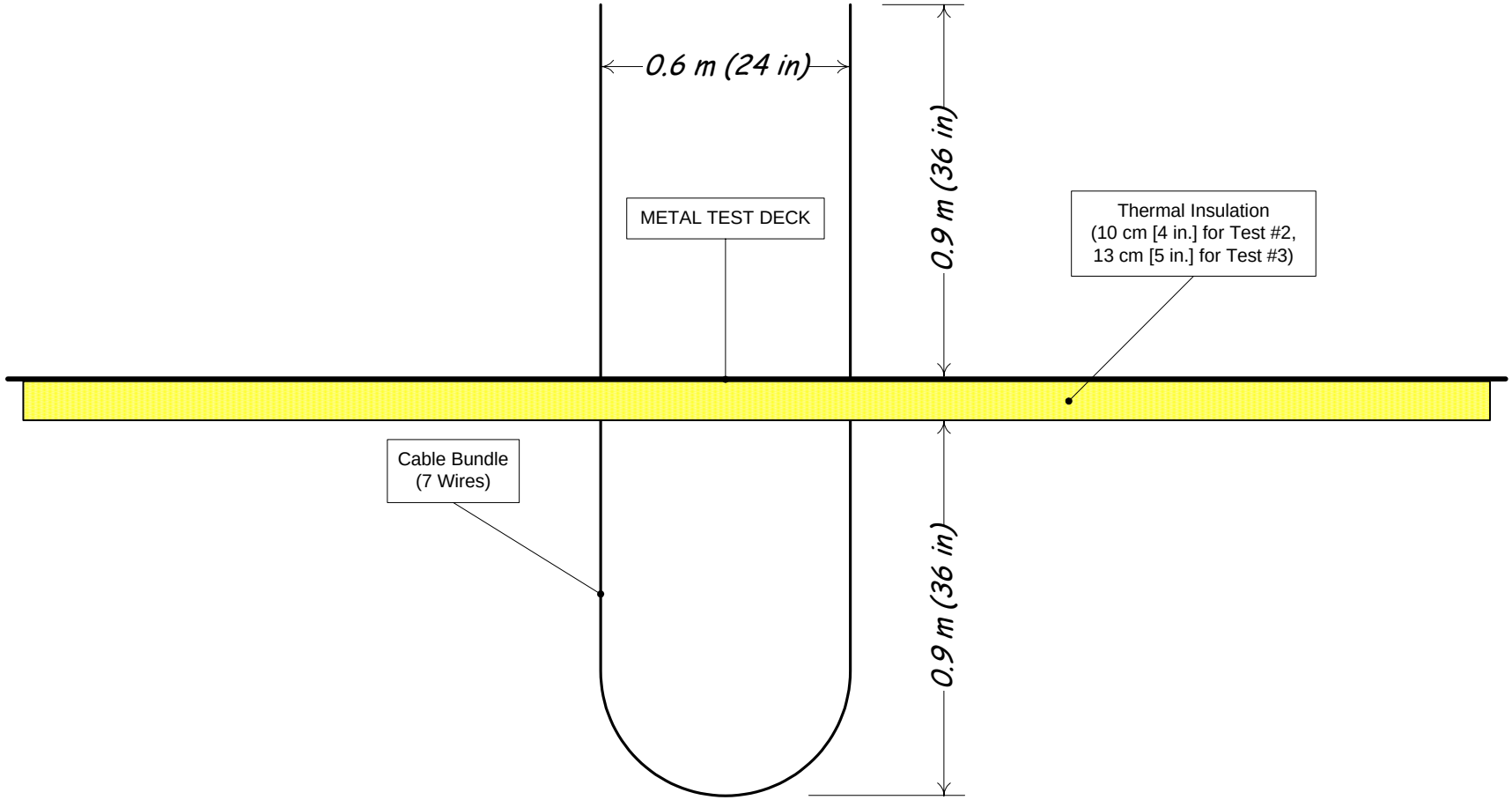

Figure A9: Unsupported cable-drop test specimens (side view with dimensions).

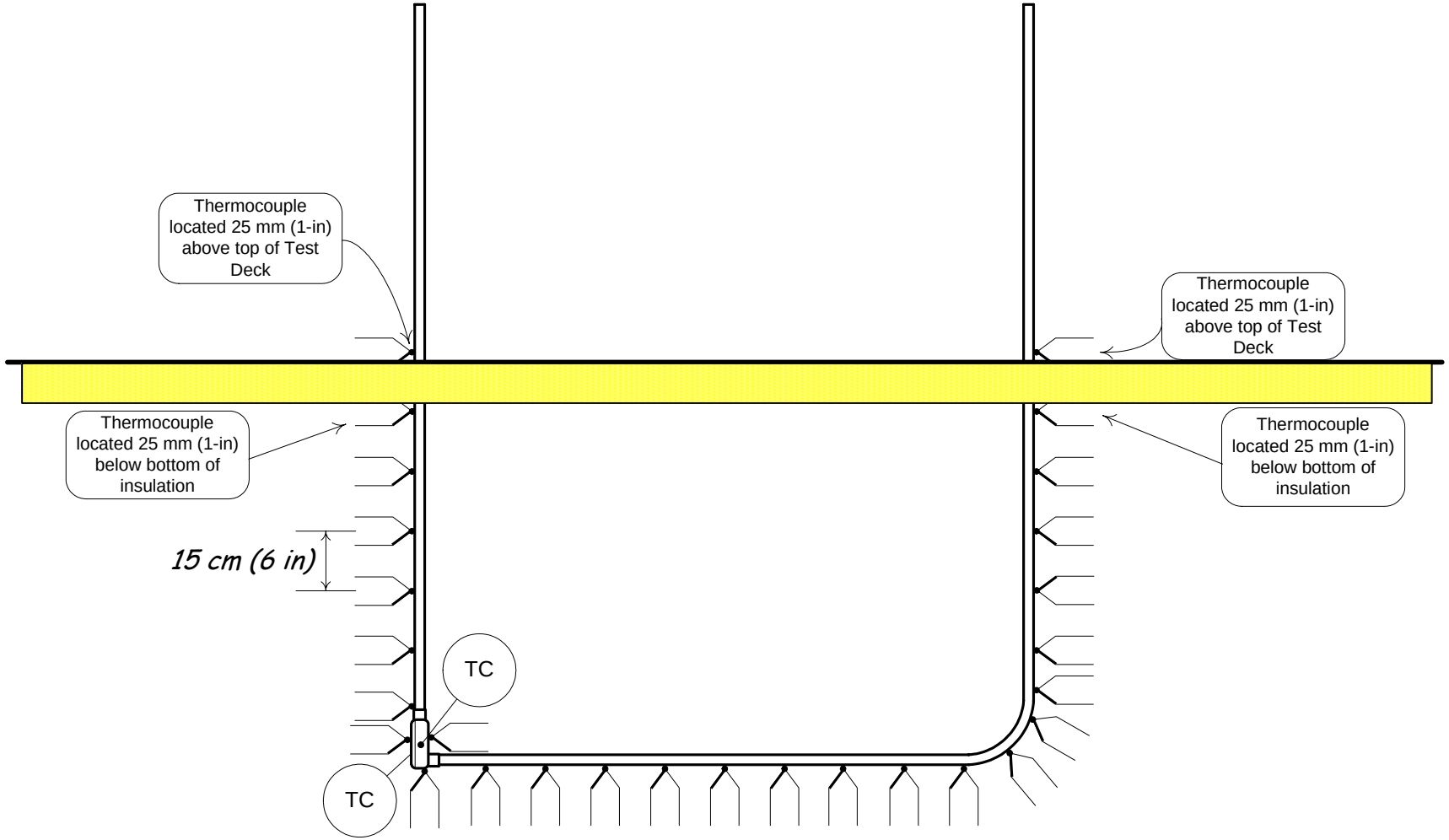

Figure A10: Thermocouple placement on 27-mm (1-in) conduit test specimens (additional thermocouples to be attached—at 150-mm [6-in] spacing intervals—to a bare #8 copper wire routed through conduit).

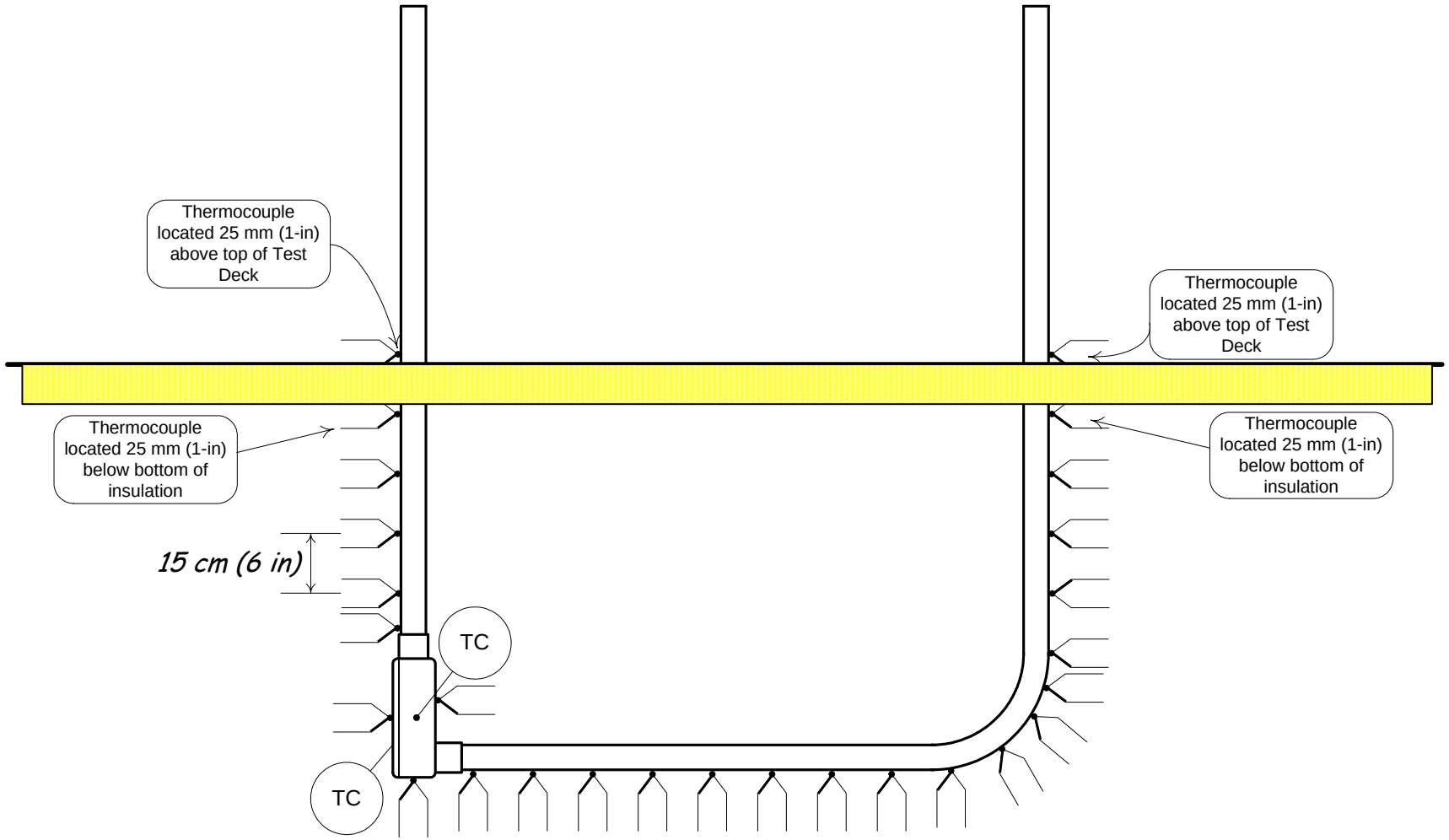

Figure A11: Thermocouple placement on 63-mm (2½-in) conduit test specimens (additional thermocouples to be attached—at 150-mm [6-in] spacing intervals—to a bare #8 copper wire routed through conduit).

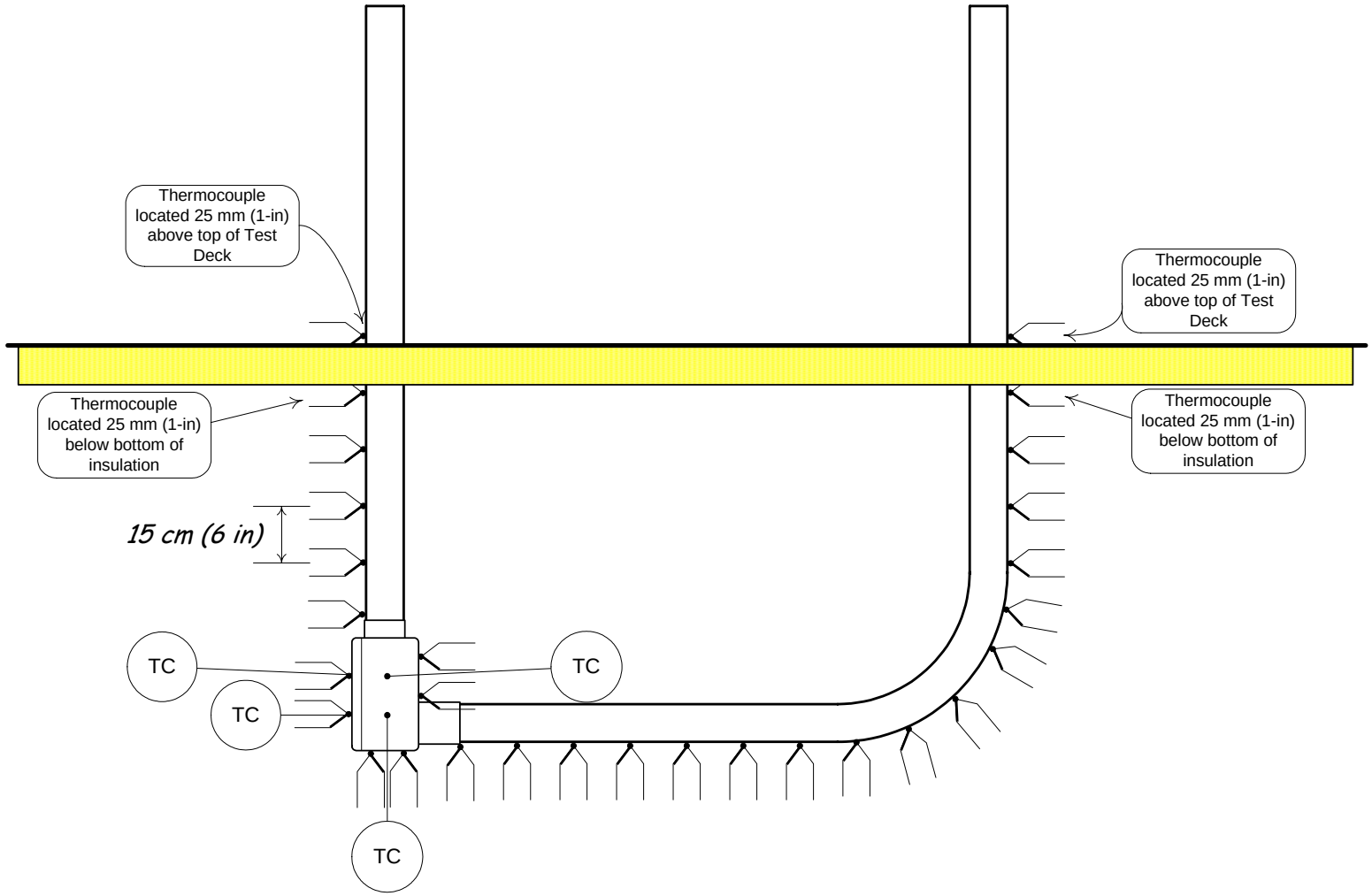

Figure A12: Thermocouple placement on 103-mm (4-in) conduit test specimens (additional thermocouples to be attached—at 150-mm [6-in] spacing intervals—to a bare #8 copper wire routed through conduit).

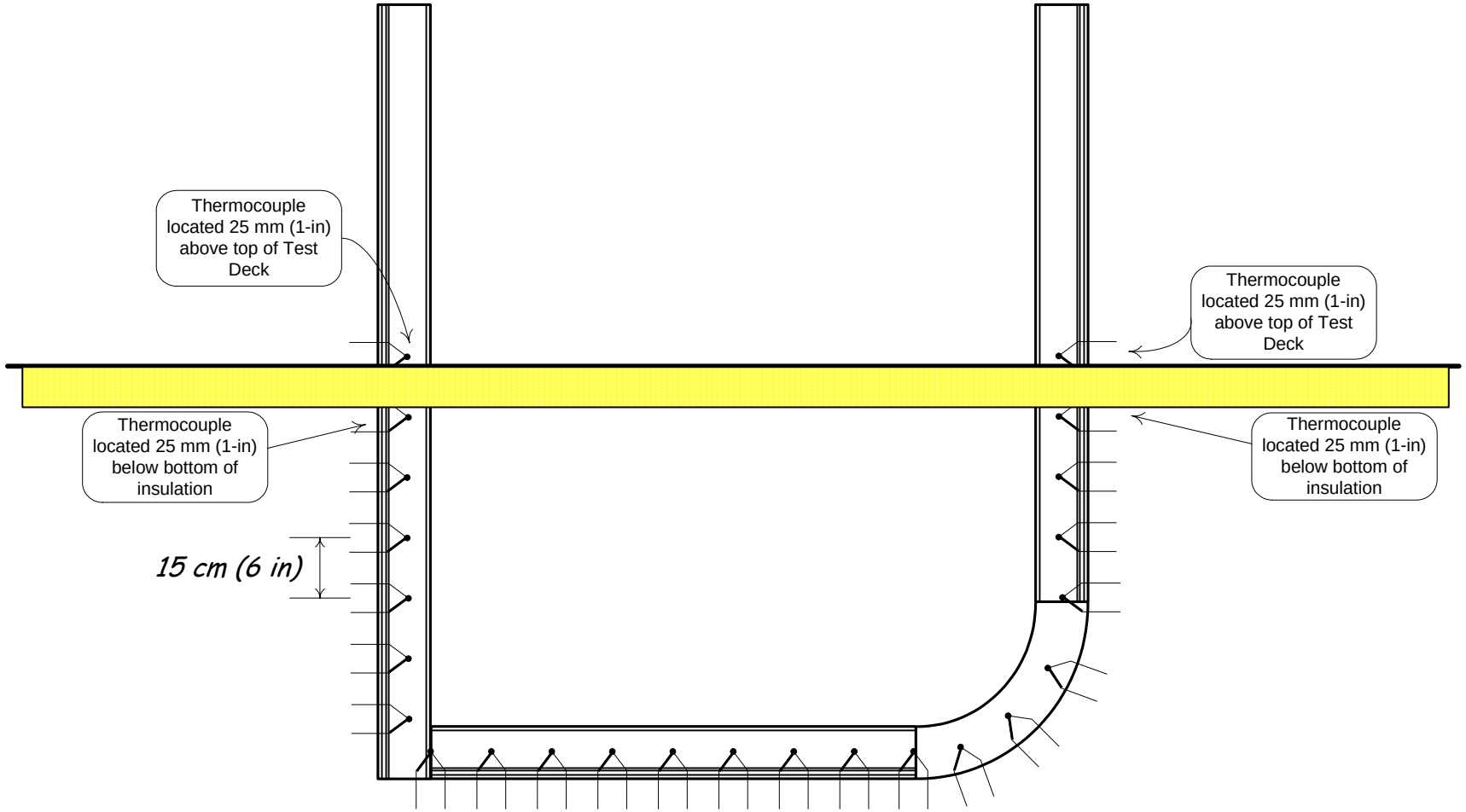

Figure A13: Thermocouple placement on 305-mm (12-in) cable tray test specimens (side view only, additional thermocouples to be attached at 150-mm [6-in] spacing intervals on other side rail and to a bare #8 copper wire routed along the mid-axis of the tray on the bottom of the rungs).

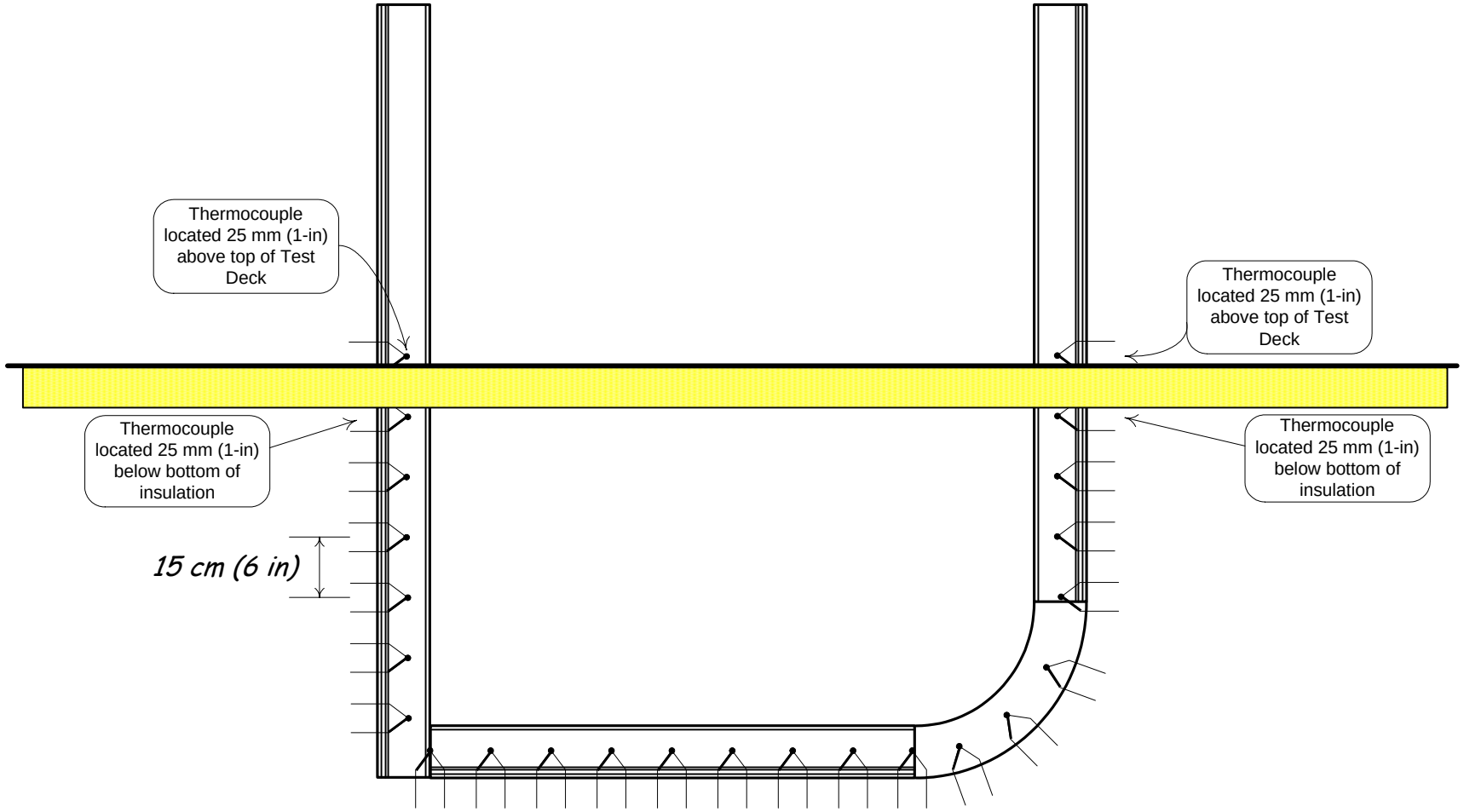

Figure A14: Thermocouple placement on 914-mm (36-in) cable tray test specimens (side view only, additional thermocouples to be attached at 150-mm [6-in] spacing intervals on other side rail and to a bare #8 copper wire routed along the mid-axis of the tray on the bottom of the rungs).

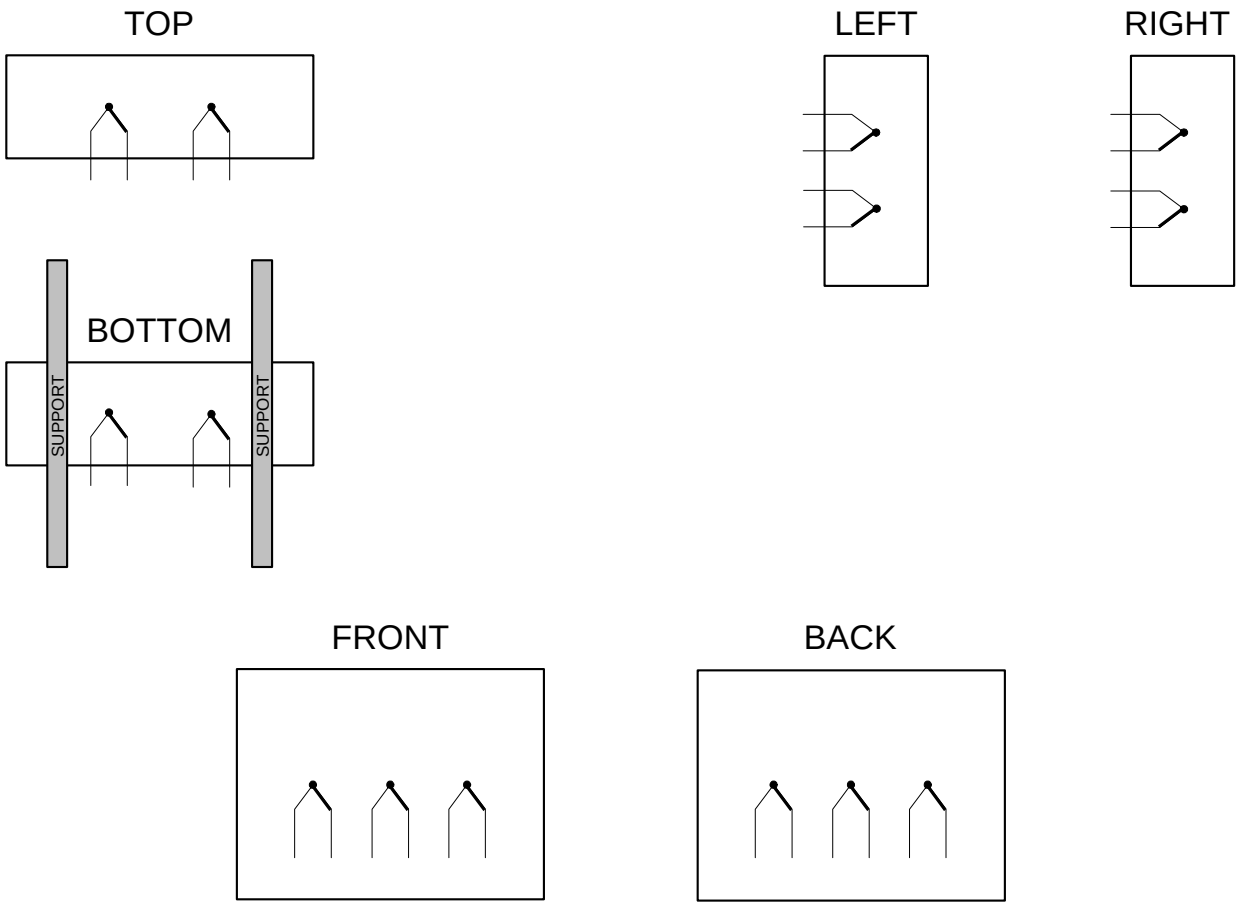

Figure A15: Thermocouple placement on junction box test specimen surfaces (no bare #8 copper conductor wire will be located inside the box and no thermocouples will be used to monitor the status of the junction box supports).

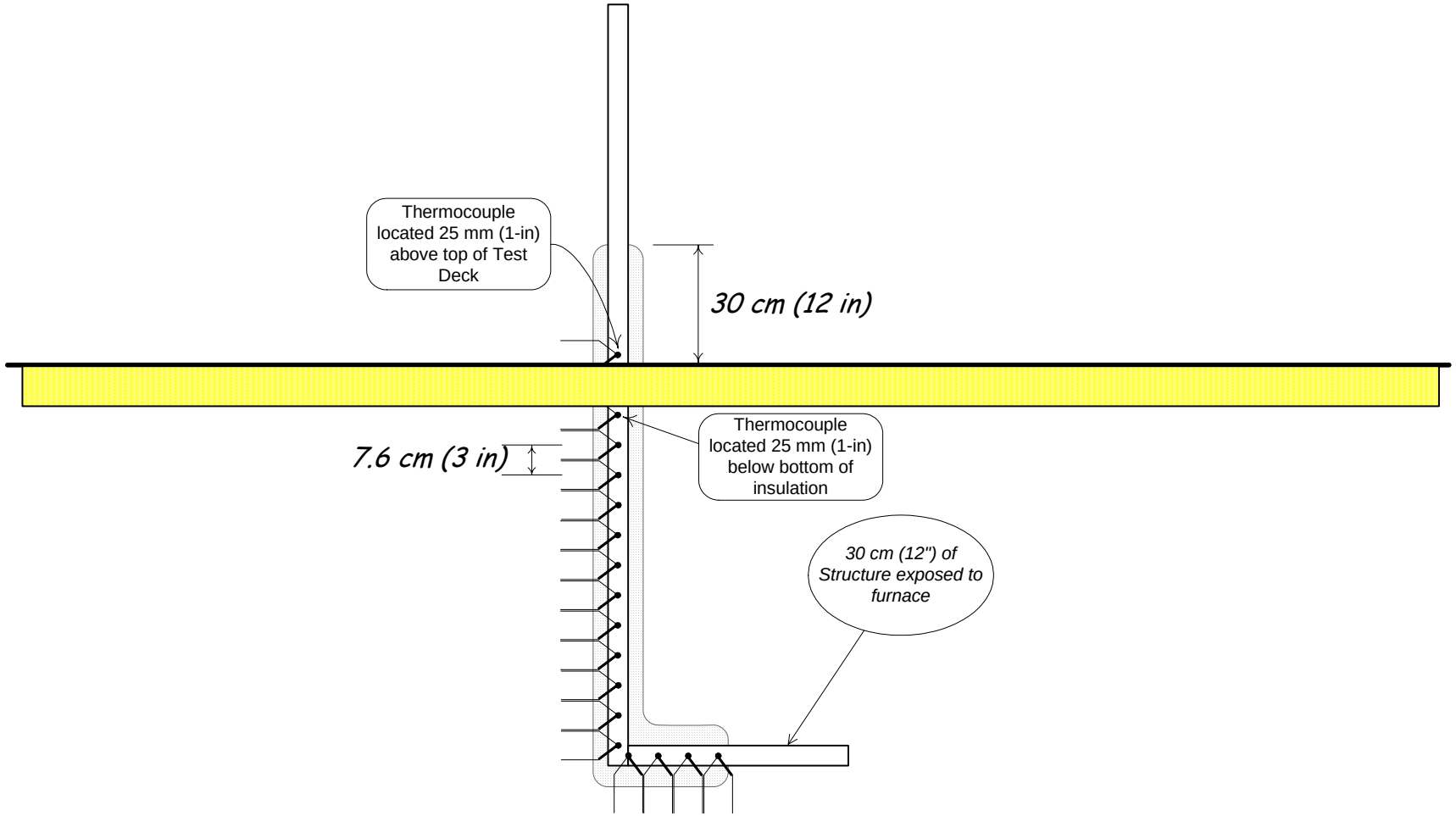

Figure A16: Thermocouple placement on tube steel support structure test specimens. (Note: ERFBS silhouette shown for reference only.)

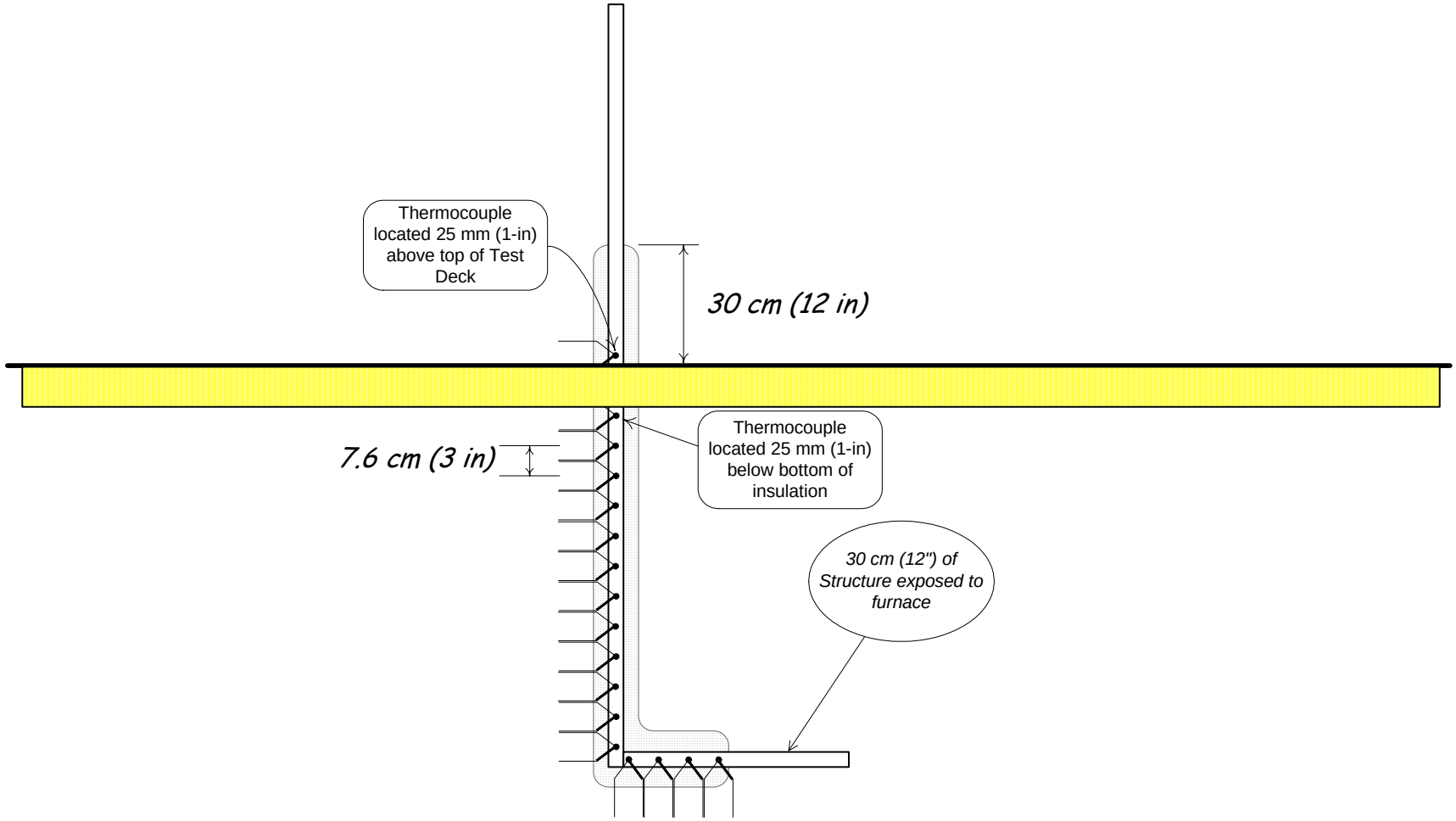

Figure A17: Thermocouple placement on Unistrut® channel support structure test specimens. (Note: ERFBS silhouette shown for reference only.)

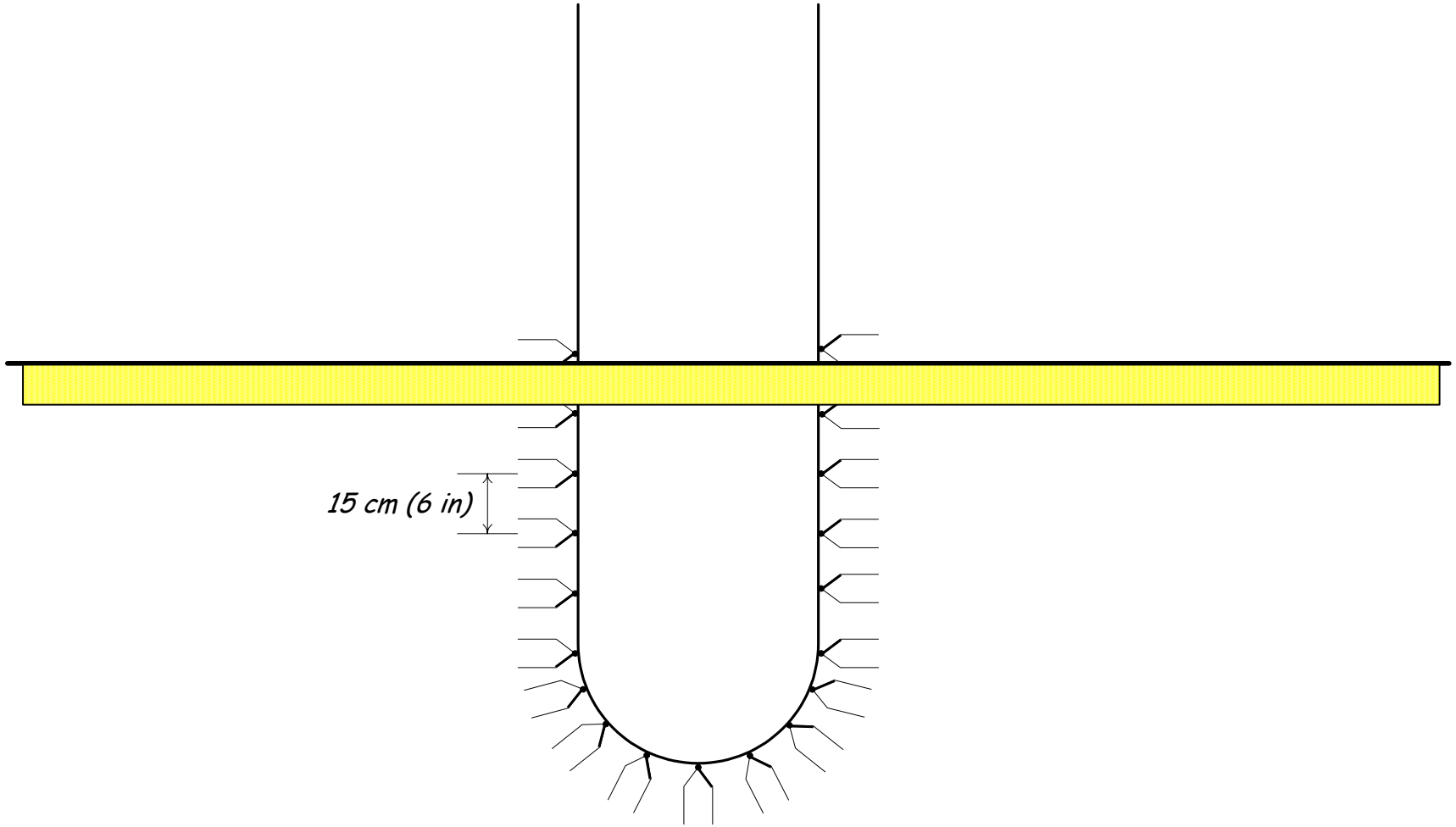

Figure A18: Thermocouple placement on unsupported cable drop test specimens.

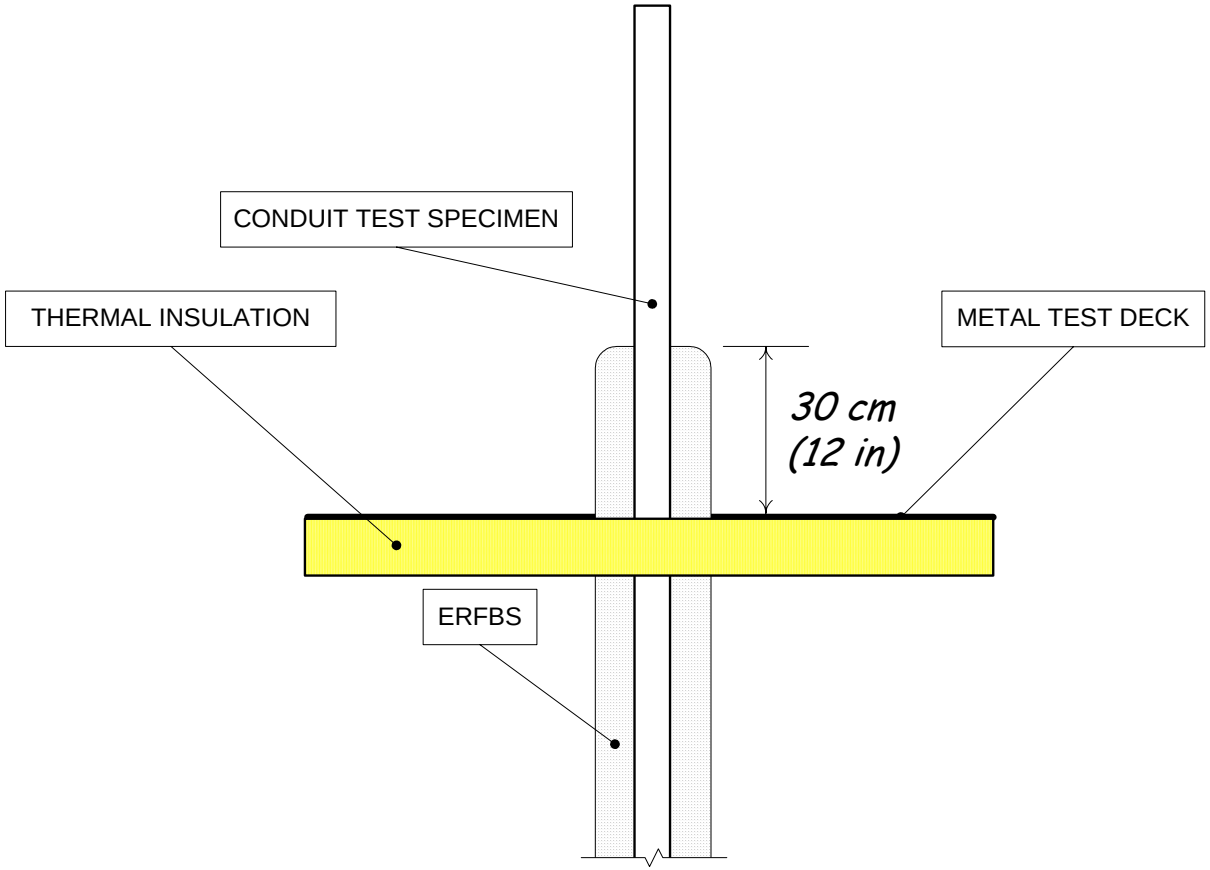

Figure A19: Detail of conduit test specimen direct attachment ERFBS extension through the test deck.

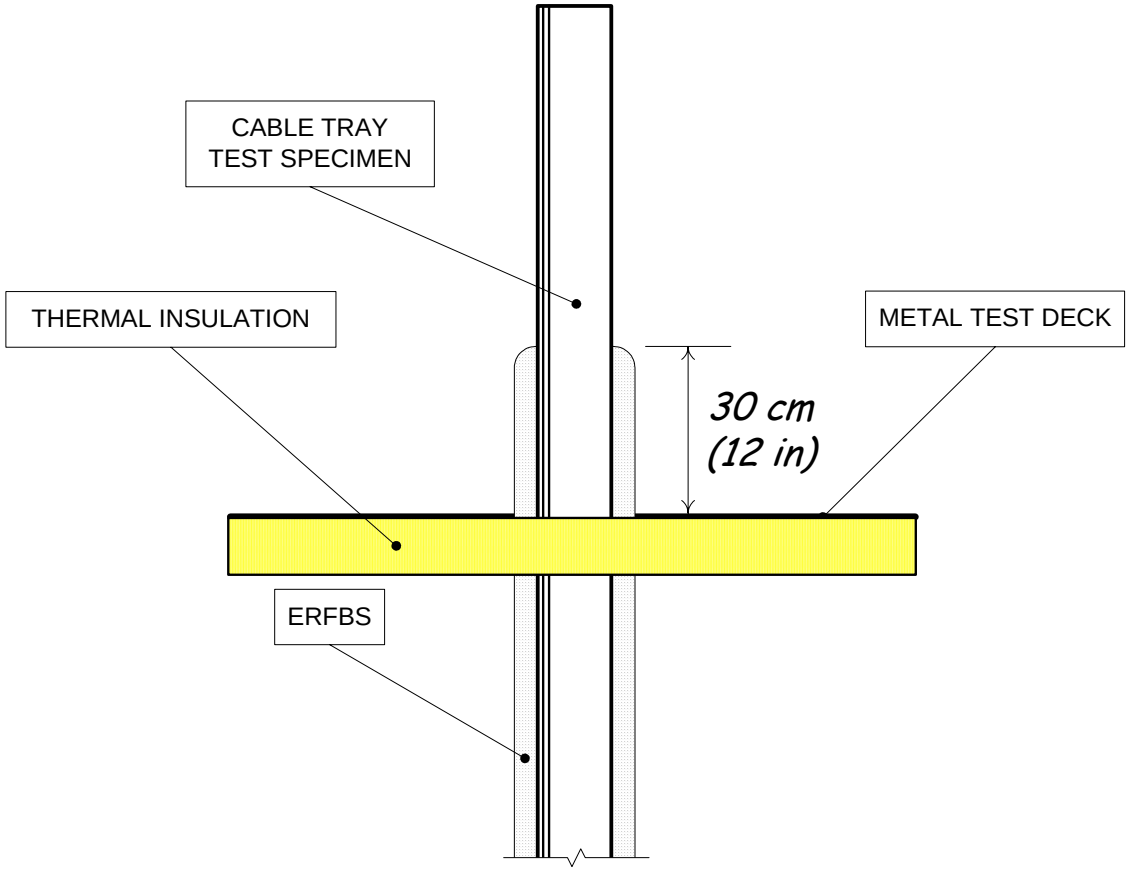

Figure A20: Detail of cable tray test specimen direct attachment ERFBS extension through the test deck.

B Email Correspondence from NEI to NRC Regarding Predominant Industry Practices for Hemyc

The message below is the body of an email from Fred Emerson, NEI, to Mark Salley, NRC, dated January 18, 2005, with subject heading, “Hemyc – Predominant Industry Practices.”

Mark and Roy -

As requested, here are the answers to your questions.

Thanks,

Fred Emerson
202-739-8086

<<<<<<<<<<<<<<<<<<<<<<<<<<<<<<<>>>
>>>>>>>>>>>>>>>>>

1. Fiberglass cloth inner cover. Which is the predominate industry practice ~ To use the fiberglass cloth on the non-fire side of the barrier, or to just use the siltemp material on both sides? Was there any difference between the conduit & cable trays (as to how it was done)

Answer: The predominant industry practice is to use siltemp for both the internal and external fabric. In some cases the fiberglass cloth was used on the internal side (facing the protected component) and in these cases the external fabric was overlapped a minimum of 6" onto the non-fire side.

2. Attachments The testing used finger straps. Most of the photos we have seen use banding. Which method was prevalent in industry? Again, any difference between conduit vs. cable tray vs. junction boxes (e.g., bands are prevalent on conduits, while finger straps were used on cable trays)

Answer: The predominant industry practice is to use stainless steel banding. This applies to cable trays, conduits and boxes.

3. Air drops What is predominate ~ the use of air gap spacers between the cable & fire barrier, or direct attachment around the air drop?

Answer: The predominant method is to install the Hemyc wrap with gap spacers to ensure that a "dead air space" is maintained between the unexposed side of the wrap and the protected cable surface.

4. Density of material The spec calls out 6 - 8 lb density. Did any licensee have any QA requirements to measure this? Is there any record of what density of material the licensee installed?

Answer: The material was specified to be 6 to 8 lb density as manufactured by Johns-Manville, Babcock & Wilcox or wrap vendor approved equal. This material was then installed to the specified thickness. No site verification of density was required nor necessary as the material used (density range) was consistent to that specified in the fire qualification tests. These materials were considered approved off-the-shelf items and required a certificate of compliance/conformance.

5. Joint Technique There are a number of different joint techniques, from butt joints, to overlapping the joint a minimum of 2 inches, to but joints with a 6 in. collar. Which method is predominate on conduits? cable trays?

Answer: The industry is essentially evenly split between using an overlapping joint method and the butt joint with a collar method for conduits. Typically trays use the overlapping joint method with an overlapping joint of 2 inches.

Appendix B

CONSTRUCTION DRAWINGS

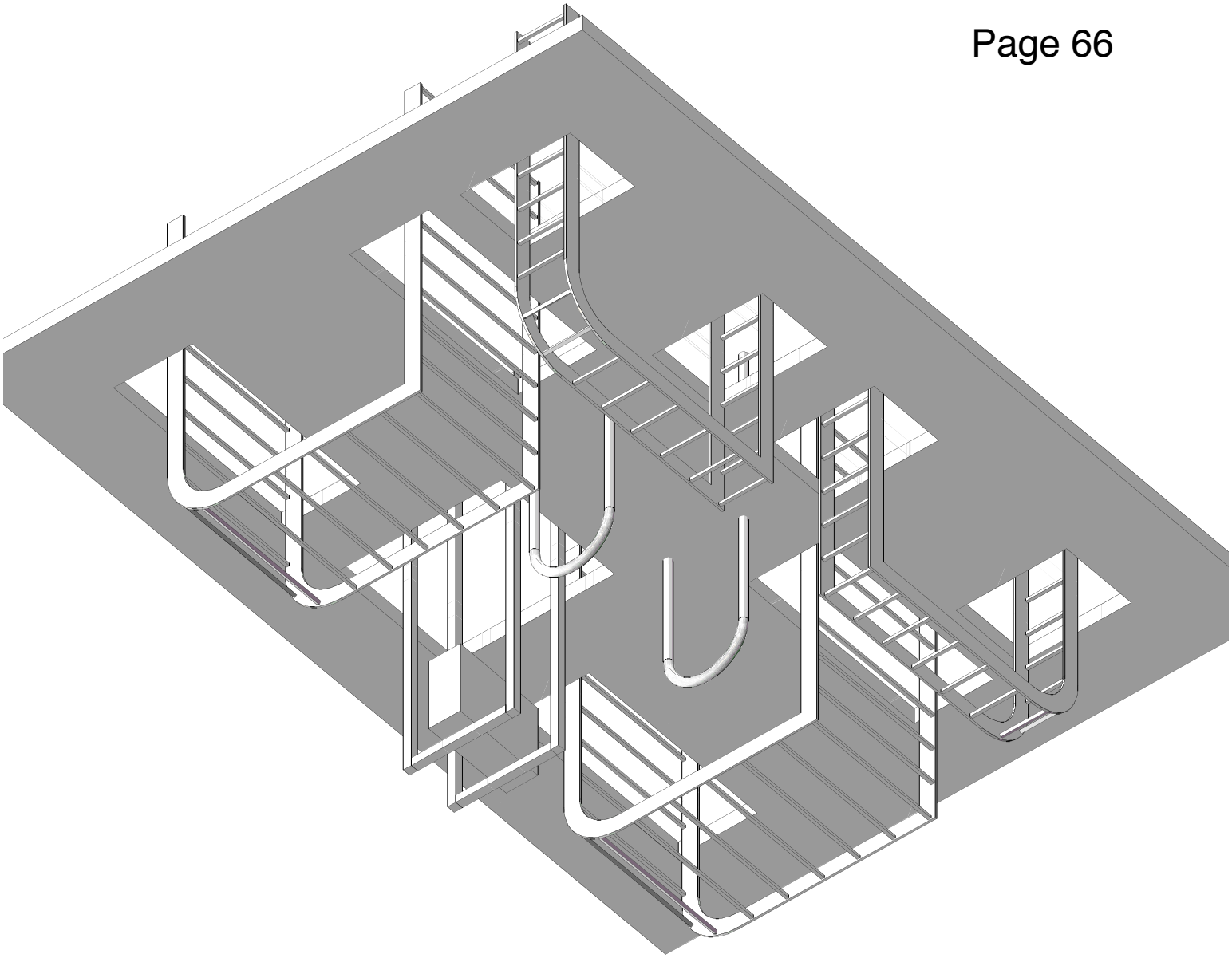

Note:
This view shows the separation and placement of all raceways in Test #2. Support members on the unexposed side of the deck are not shown.

OMEGA POINT LABORATORIES, INC. Project No. 14790-123264
SANDIA NATIONAL LABORATORIES
Fig. 1, Rev. 1 Test 2 Assembly Isometric View
Drwn by:D.N.Priest Date: 1/4/05 OPL App'l: C Humphrey Date: 1/4/05 Sandia App'l: Date:

Scale=1:35

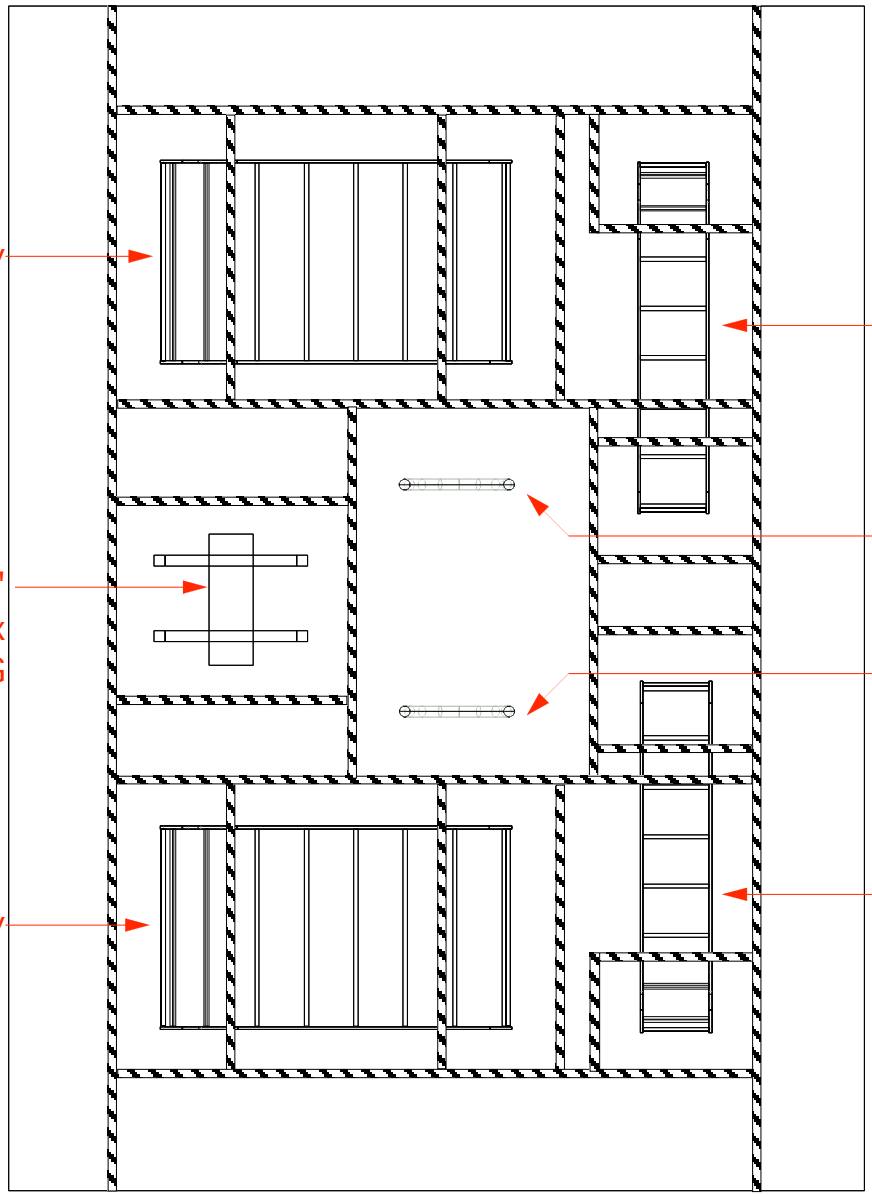

PLAN VIEW

Note:
All raceway items have been placed in the furnace in symmetric locations, to give as uniform exposure as possible between two of the same items. In this drawing, the C5x6.7 structural channel above the deck steel is shown cross-hatched, and the deck steel and 4" channel below it are transparent, to indicate the placement of the raceways. See Fig. 3 Test 2 Assembly for deck and opening dimensions.

OMEGA POINT LABORATORIES, INC. Project No. 14790-123264
SANDIA NATIONAL LABORATORIES
Fig. 2, Rev. 2 Test 2 Assembly Raceway Layout
Drwn by:D.N.Priest Date: 1/25/05 OPL App'l: C Humphrey Date: 1/25/05 Sandia App'l: Date:

Scale=1:35

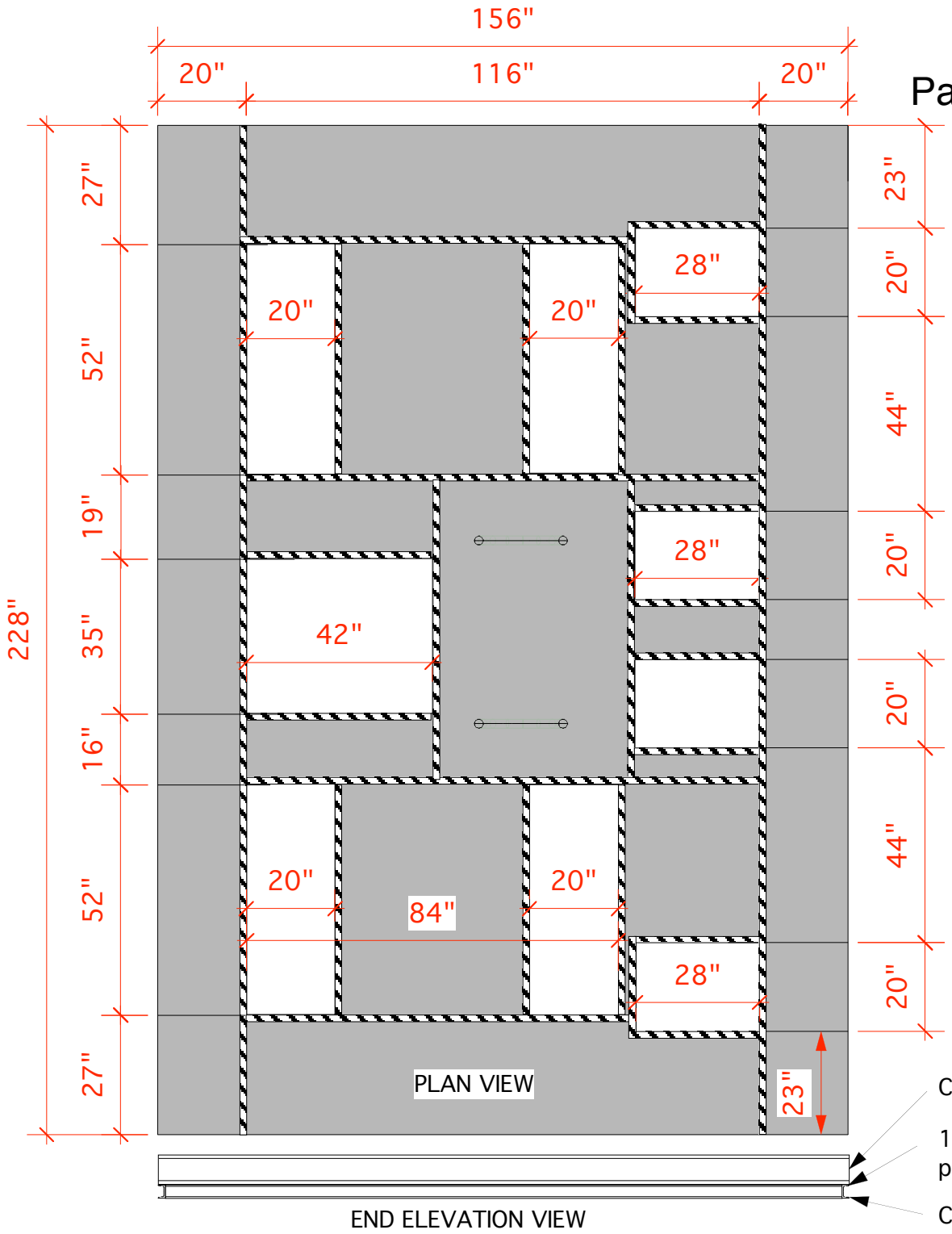

END ELEVATION VIEW

Note:
All dimensions plus or minus 1/2"

Note:
The lower perimeter steel consisted of C4x5.4 channel, positioned with flanges outwards, completely around the deck. Over the channel was placed a continuously-welded layer of 10 GA. hot-rolled steel plate. Over the steel plate was placed C5x6.7 channel, mounted with the flanges outwards from the shorter ends, and with flanges away from the interior of each opening (indicated by cross-hatching).

OMEGA POINT LABORATORIES, INC. Project No. 14790-123264
SANDIA NATIONAL LABORATORIES
Fig. 3, Rev. 2 Test 2 Assembly Deck construction Details
Drwn by:D.N.Priest Date: 1/6/05 OPL App'l: C Humphrey Date: 1/6/05 Sandia App'l: Date:

Scale=1:35

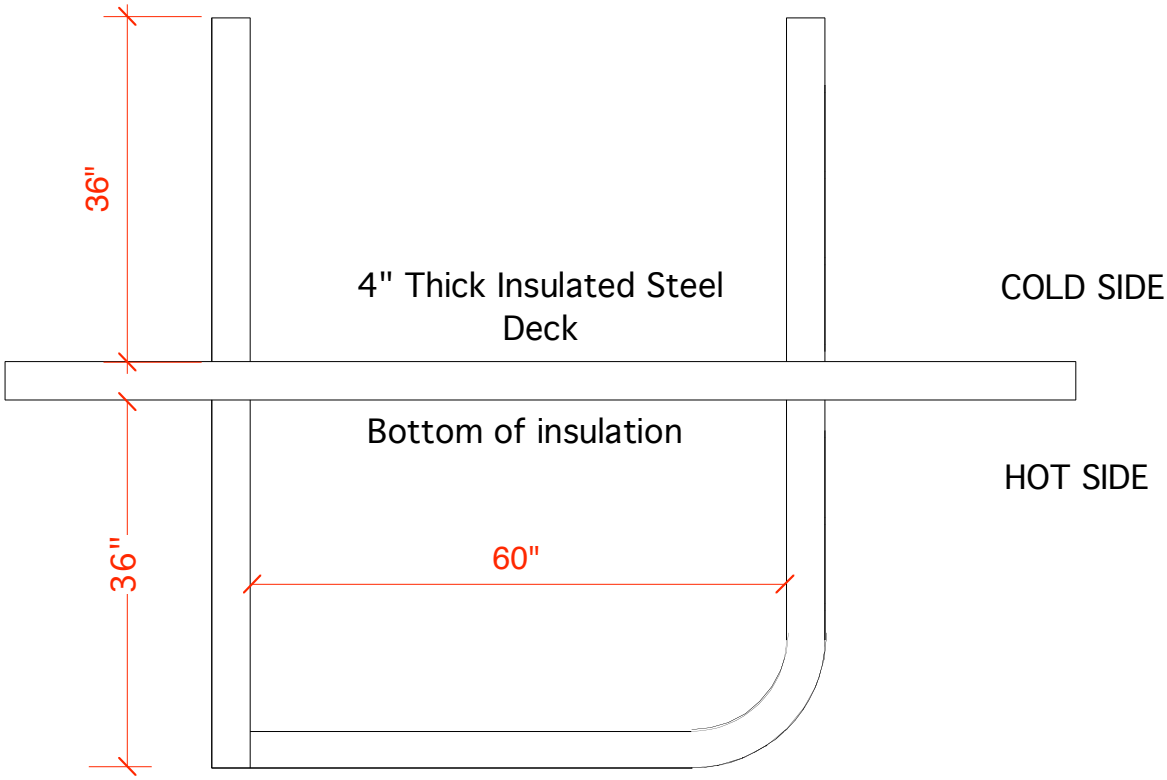

12" & 36" WIDE CABLE TRAYS
SIDE ELEVATION VIEW
(Right rail towards viewer)

OMEGA POINT LABORATORIES, INC. Project No. 14790-123264
SANDIA NATIONAL LABORATORIES
Fig. 4, Rev. 1 Test 2 Assembly Cable Tray Dimensions
Drwn by:D.N.Priest Date: 1/25/05 OPL App'l: C Humphrey te: 1/25/05 Sandia App'l: Date:

Scale=1:20

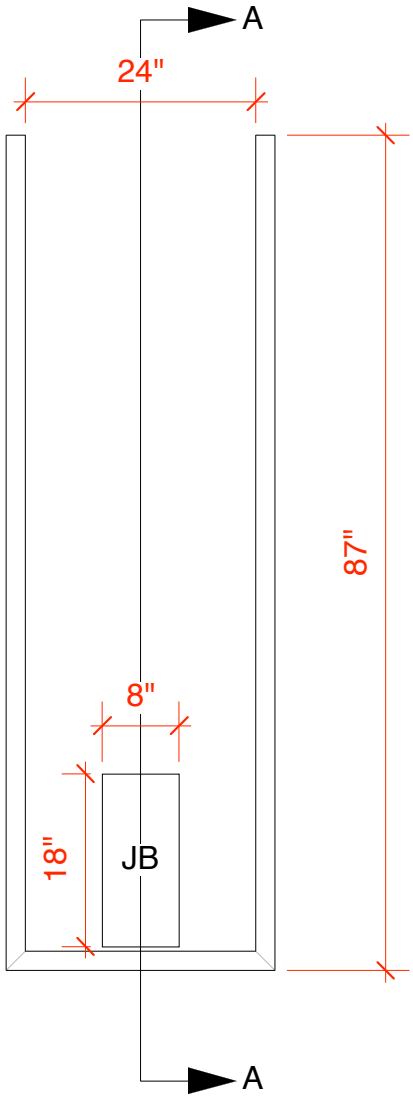

SIDE VIEW

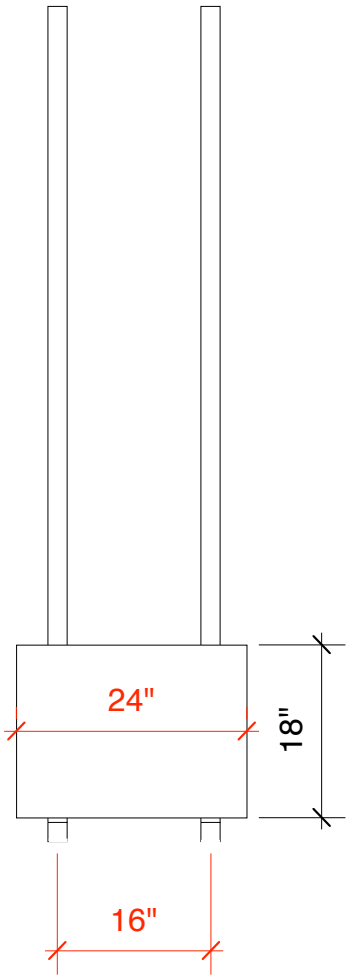

SECTION A-A

Note:
The Unistrut supports for the junction box were constructed to the dimensions indicated. The bottom of the junction box was located 45" below the under side of the insulated deck. The JB was not attached to the supports. The 2" stand-off frame (not shown) was attached and then the JB was placed back on the support frame.

OMEGA POINT LABORATORIES, INC. Project No. 14790-123264
SANDIA NATIONAL LABORATORIES
Fig. 5 Test 2 Assembly Junction Box Supports
Drwn by:D.N.Priest Date: 1/25/05 OPL App'l: C Humphrey te: 1/25/05 Sandia App'l: Date:

Scale=1:20

Appendix C

THERMOCOUPLE LOCATIONS

THERMOCOUPLE LOCATION DRAWINGS

Test #2 – Hemyc, Direct Attachment and Framed for Air Gap

Revised 03/29/05

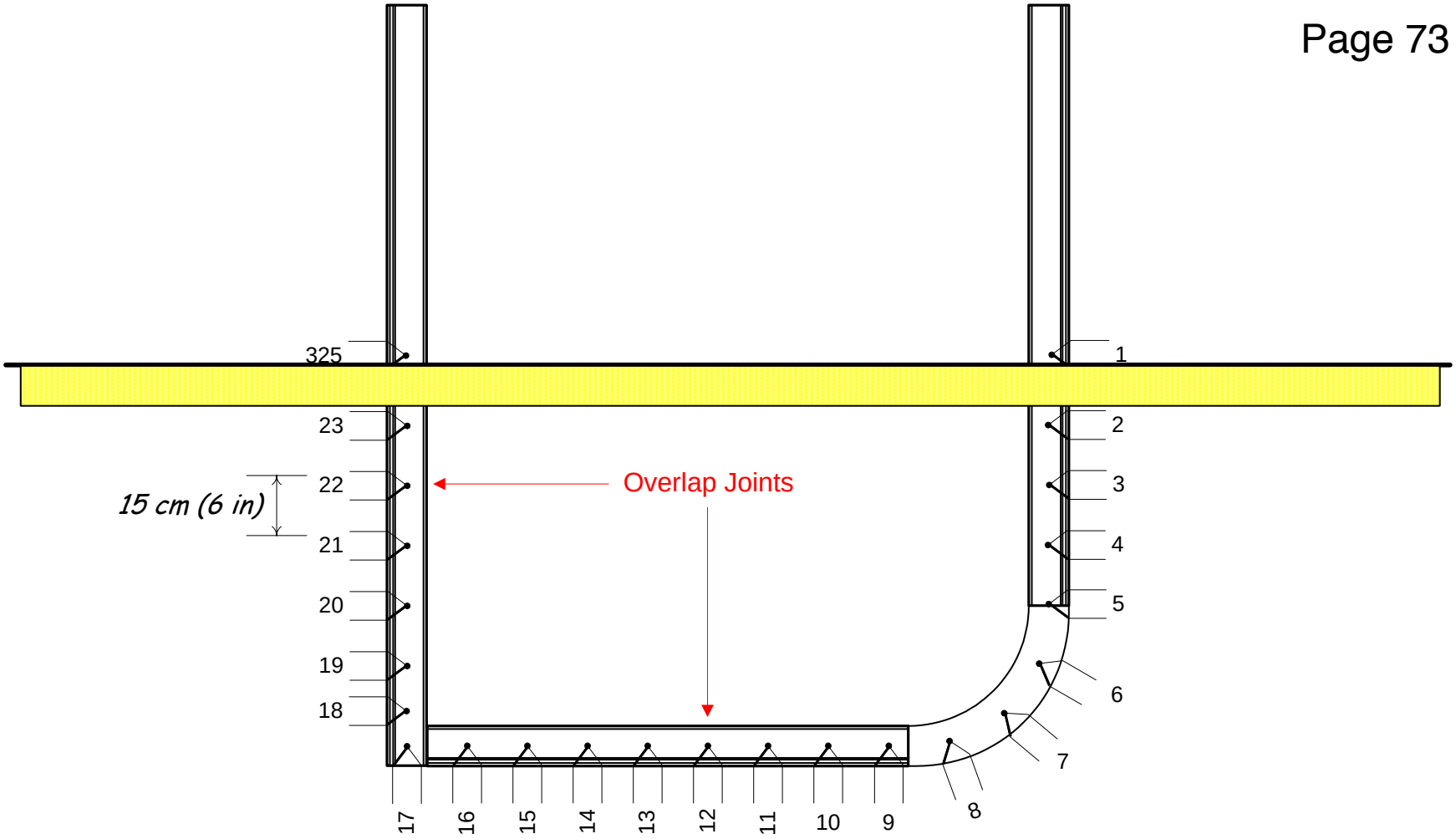

Outside side rail view
(facing toward furnace wall)

Test Specimen 2A – Empty 12-inch cable tray thermocouple locations and tag numbers. (Direct Attachment Hemyc wraps and banded.)

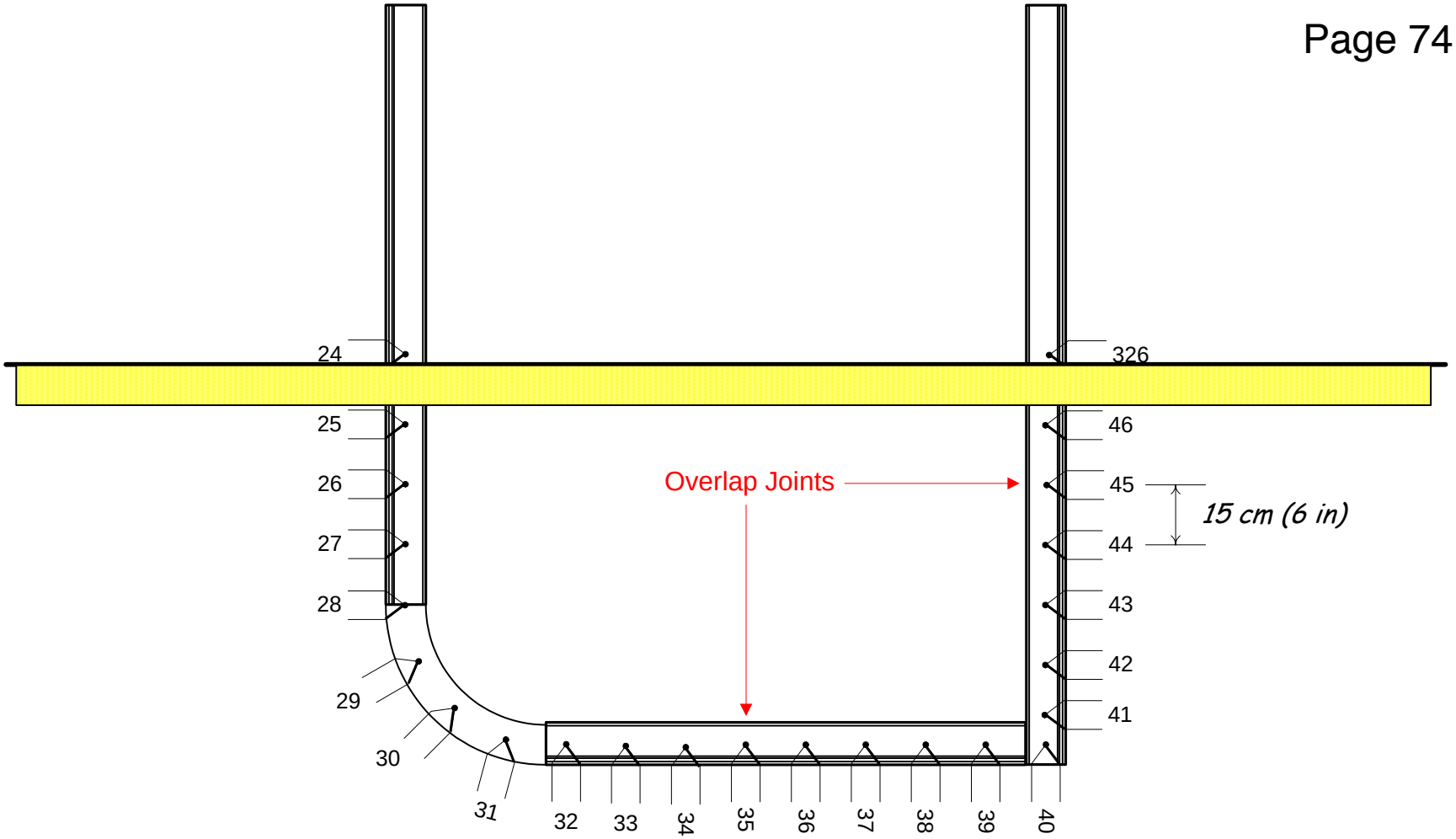

Inside side rail view
(facing toward furnace interior)

Test Specimen 2A – Empty 12-inch cable tray thermocouple locations and tag numbers. (Direct Attachment Hemyc wraps and banded.)

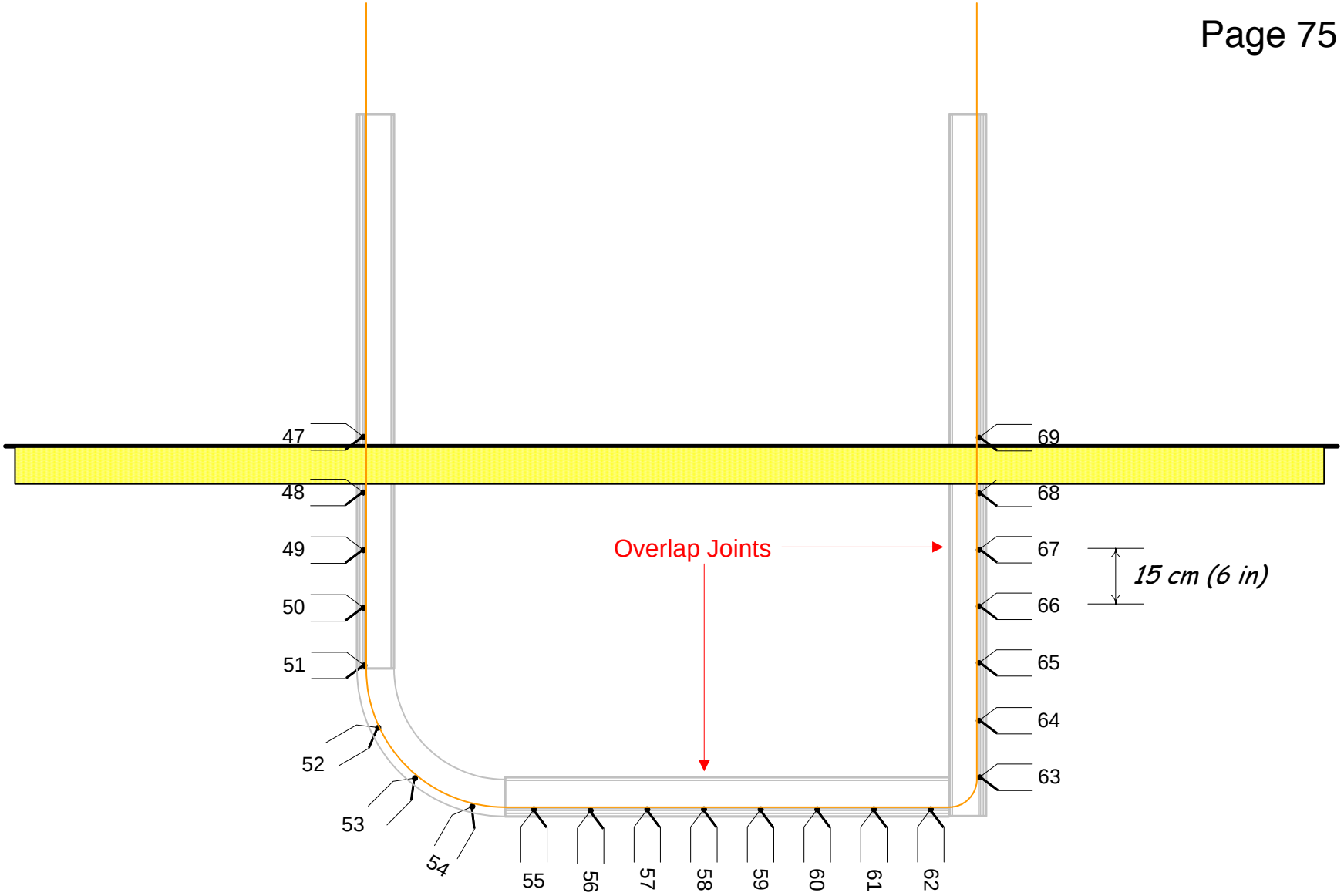

Test Specimen 2A – Empty 12-inch cable tray thermocouple locations and tag numbers on bare #8 copper wire. Note: Some uncertainty in exact thermocouple locations exists. (Direct Attachment Hemyc wraps and banded.)

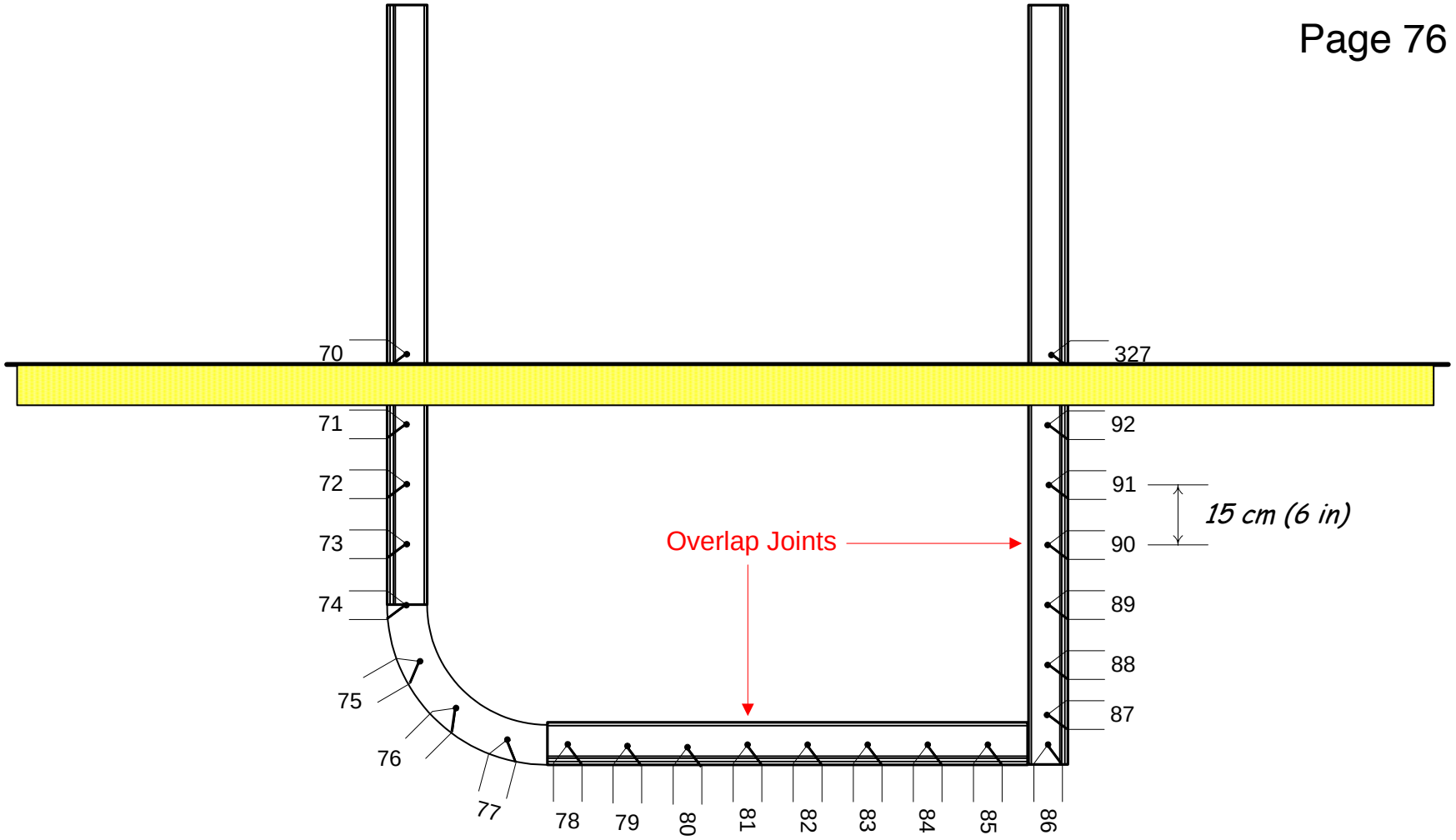

Outside side rail view
(facing toward furnace wall)

Test Specimen 2B – Empty 12-inch cable tray thermocouple locations and tag numbers. (Hemyc wrap framed for 2” Air Gap)

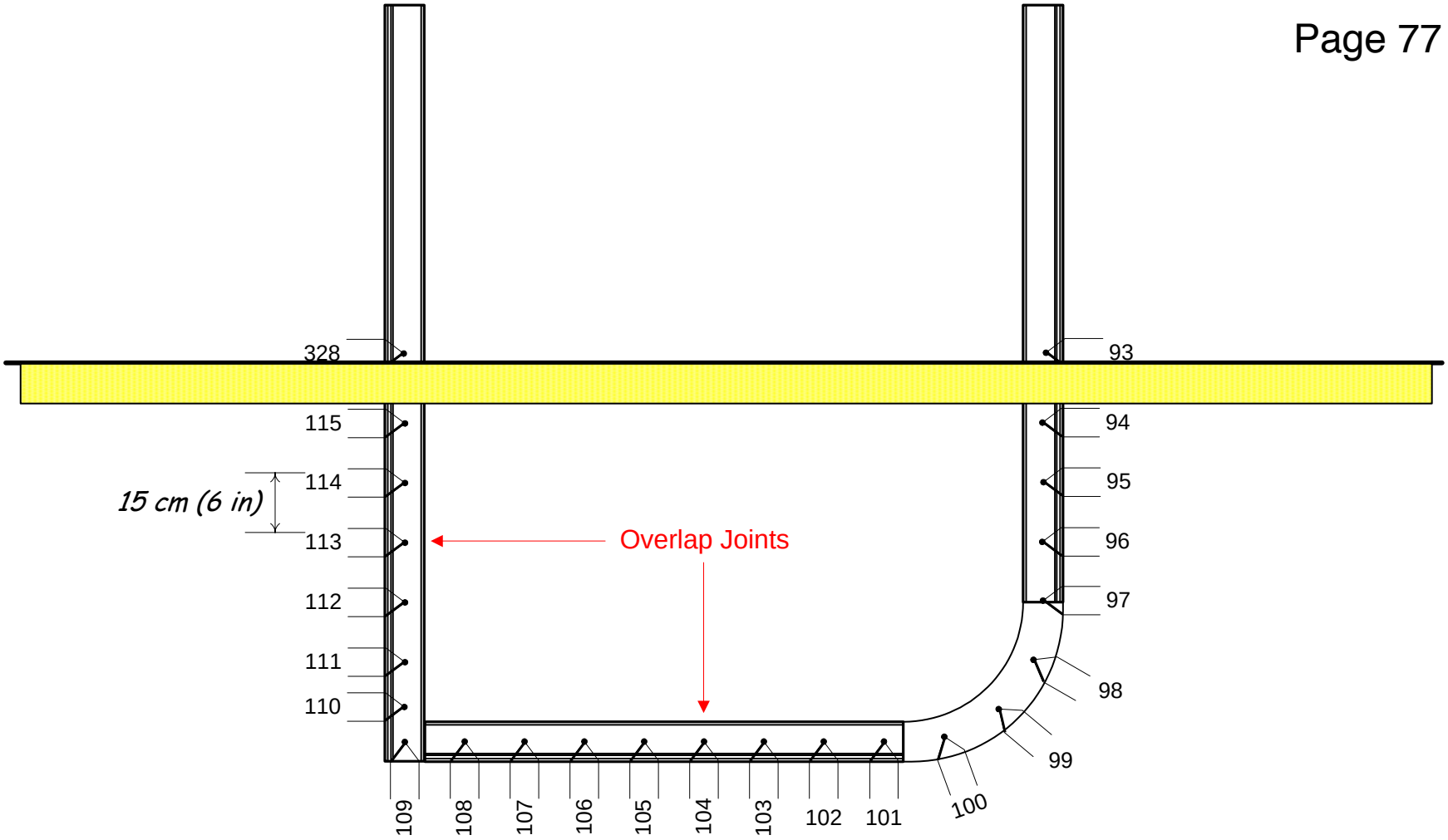

Inside side rail view
(facing toward furnace interior)

Test Specimen 2B – Empty 12-inch cable tray thermocouple locations and tag numbers. (Hemyc wrap framed for 2” Air Gap)

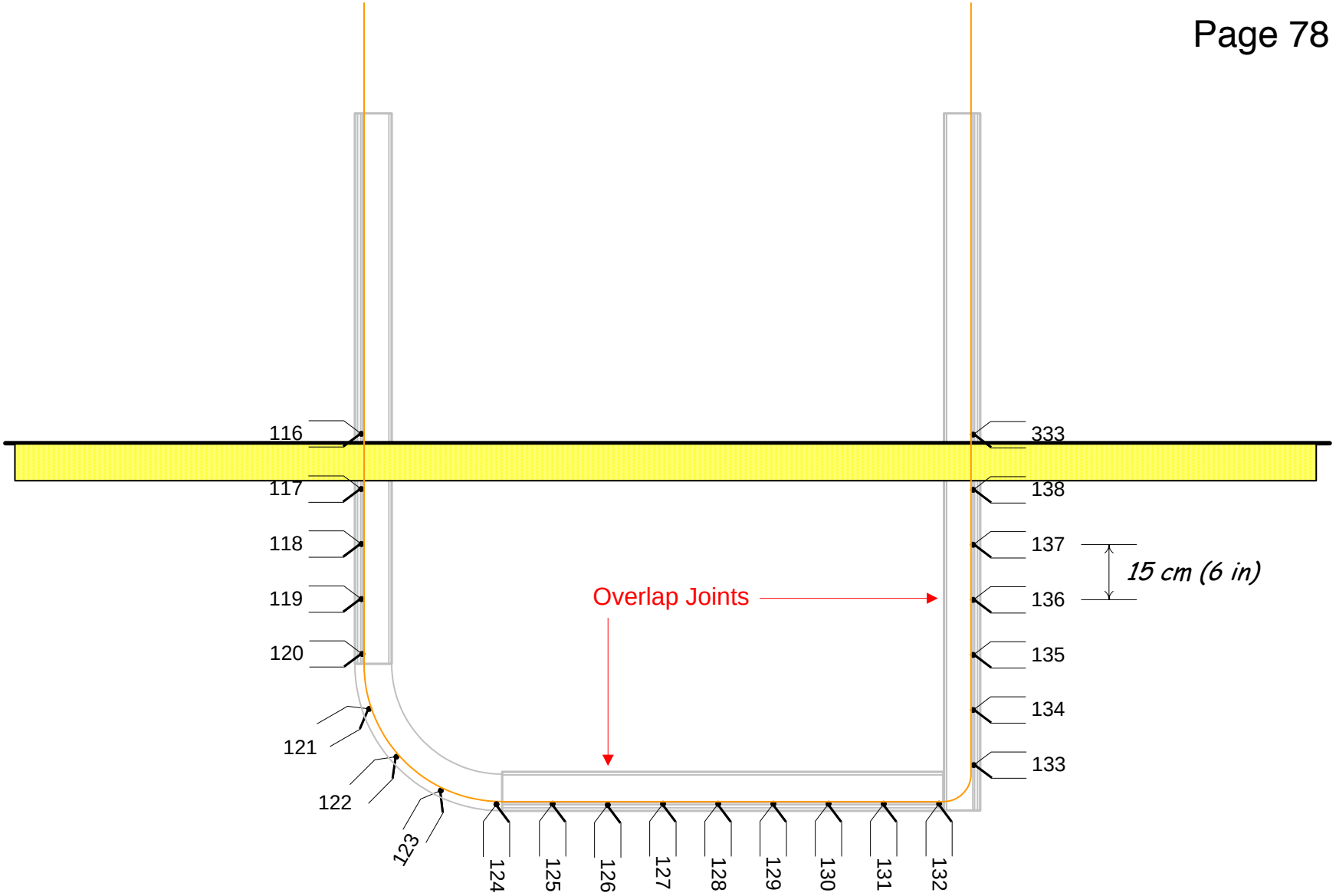

Test Specimen 2B – Empty 12-inch cable tray thermocouple locations and tag numbers on bare #8 copper wire. Note: Some uncertainty in exact thermocouple locations exists. (Hemyc wrap framed for 2" Air Gap)

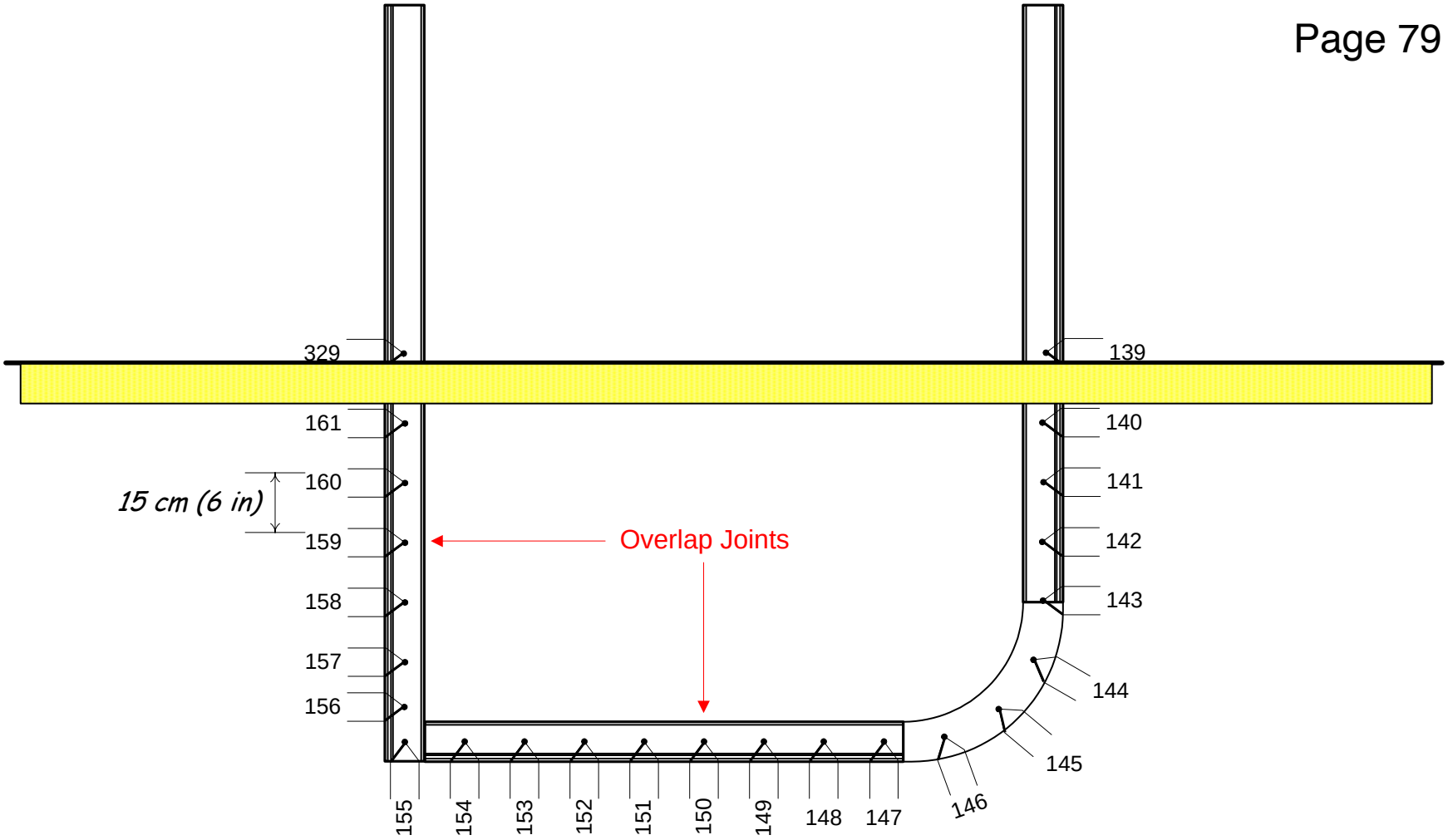

Outside side rail view
(facing toward furnace wall)

Test Specimen 2C – Empty 36-inch cable tray thermocouple locations and tag numbers. (Direct Attachment Hemyc wraps and banded.)

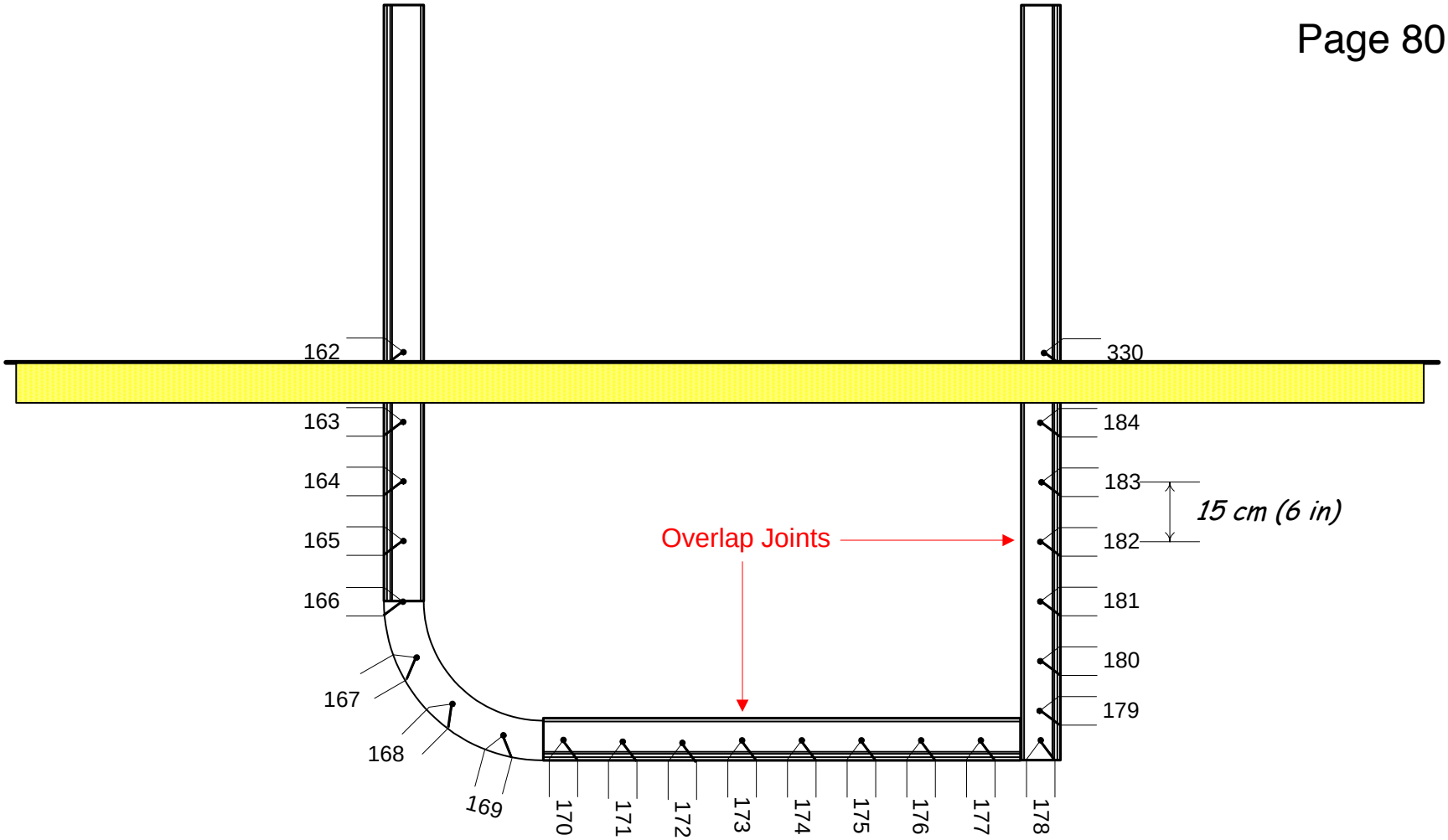

Inside side rail view
(facing toward furnace interior)

Test Specimen 2C – Empty 36-inch cable tray thermocouple locations and tag numbers. (Direct Attachment Hemyc wraps and banded.)

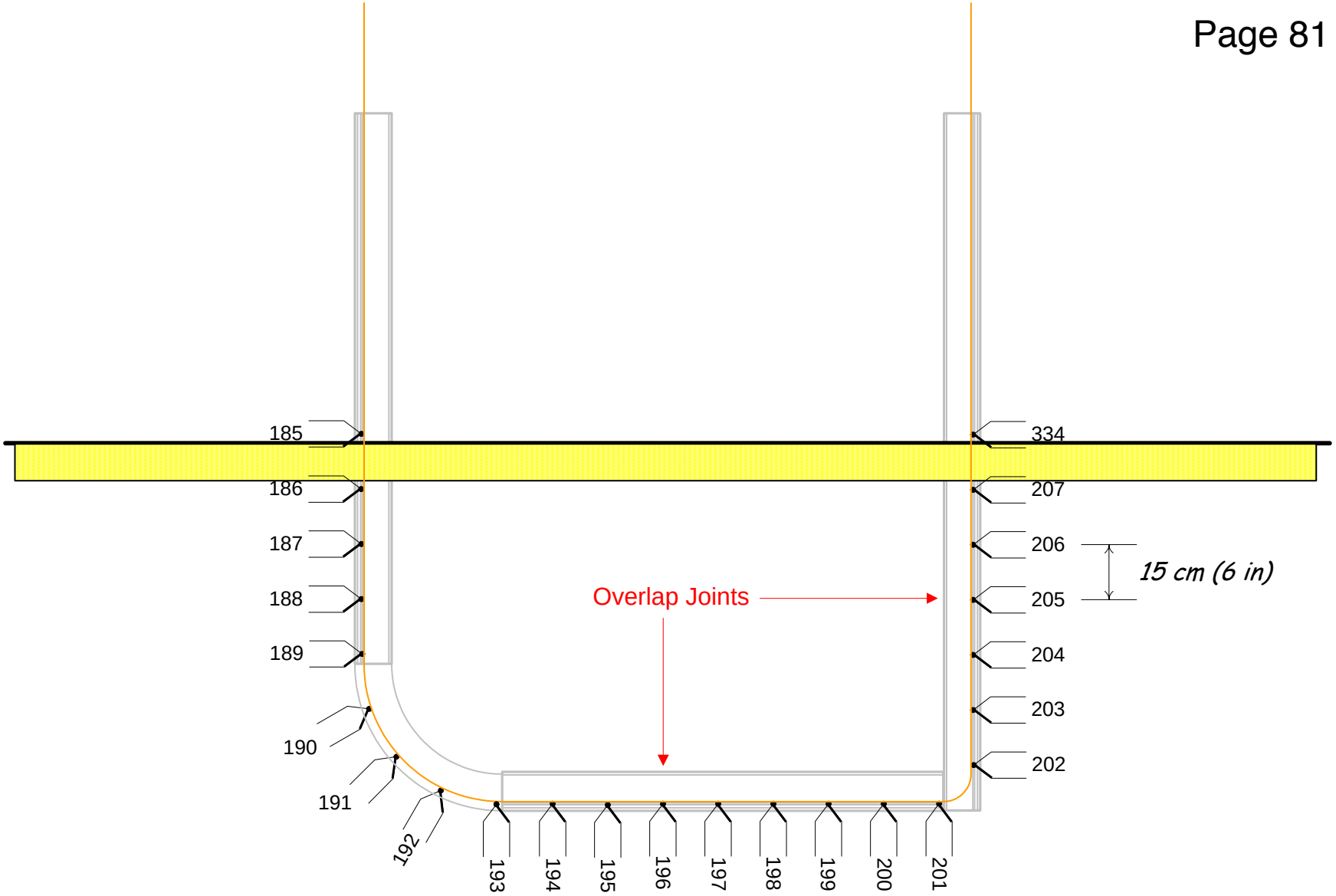

Test Specimen 2C – Empty 36-inch cable tray thermocouple locations and tag numbers on bare #8 copper wire. Note: Some uncertainty in exact thermocouple locations exists. (Direct Attachment Hemyc wraps and banded.)

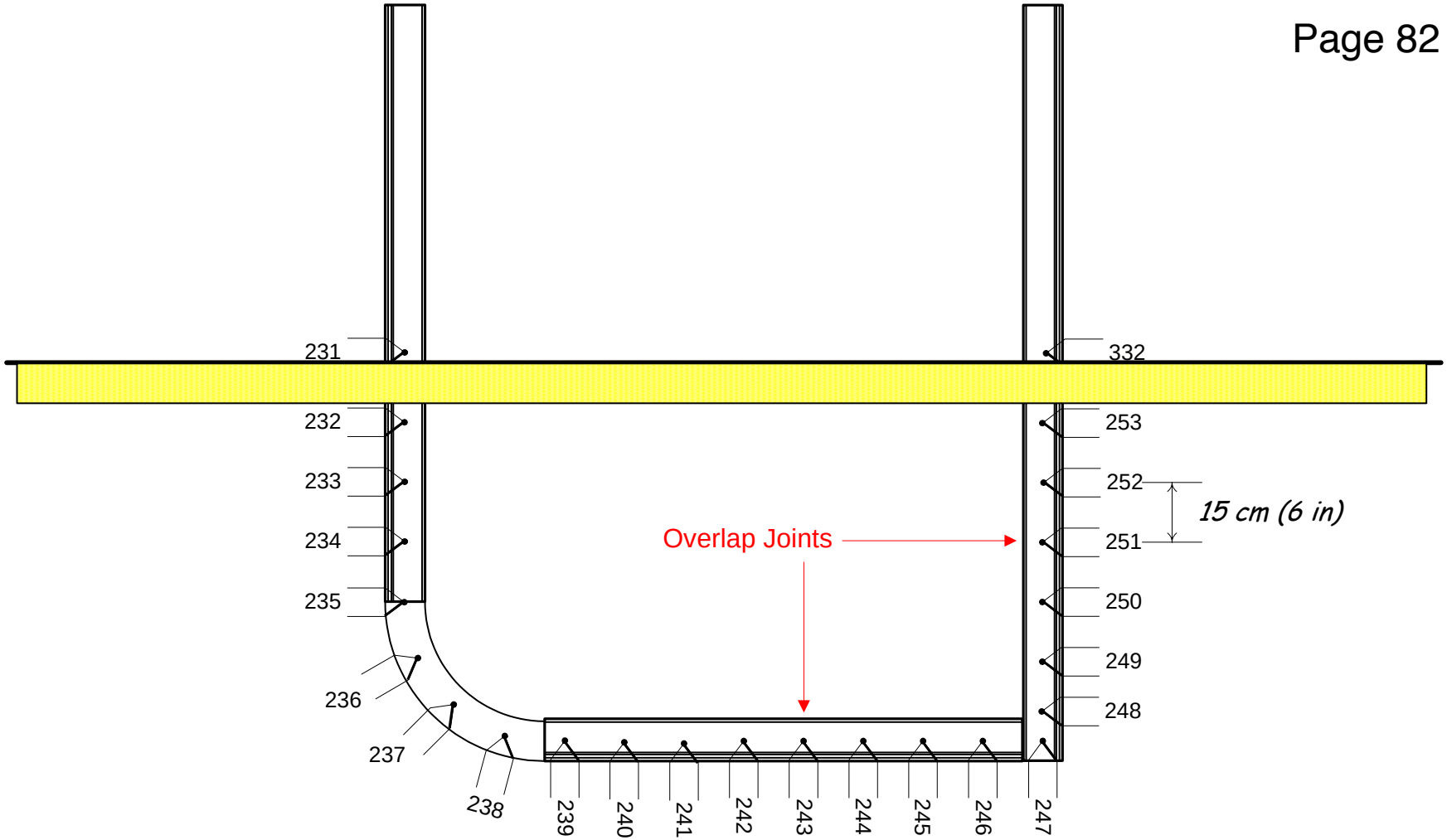

Outside side rail view
(facing toward furnace wall)

Test Specimen 2D – Empty 36-inch cable tray thermocouple locations and tag numbers. (Hemyc wrap framed for 2” Air Gap)

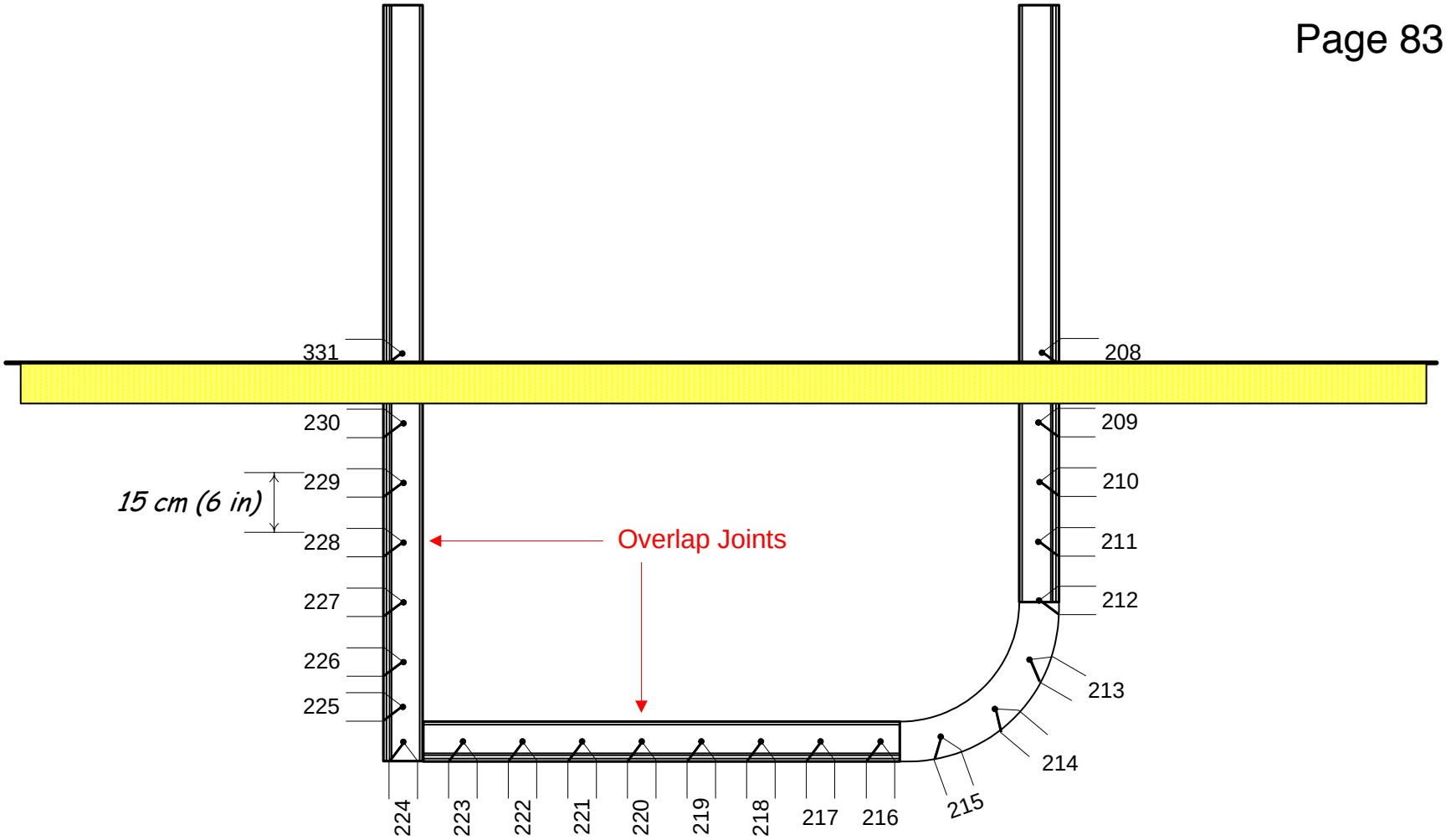

Inside side rail view
(facing toward furnace interior)

Test Specimen 2D – Empty 36-inch cable tray thermocouple locations and tag numbers. (Hemyc wrap framed for 2” Air Gap)

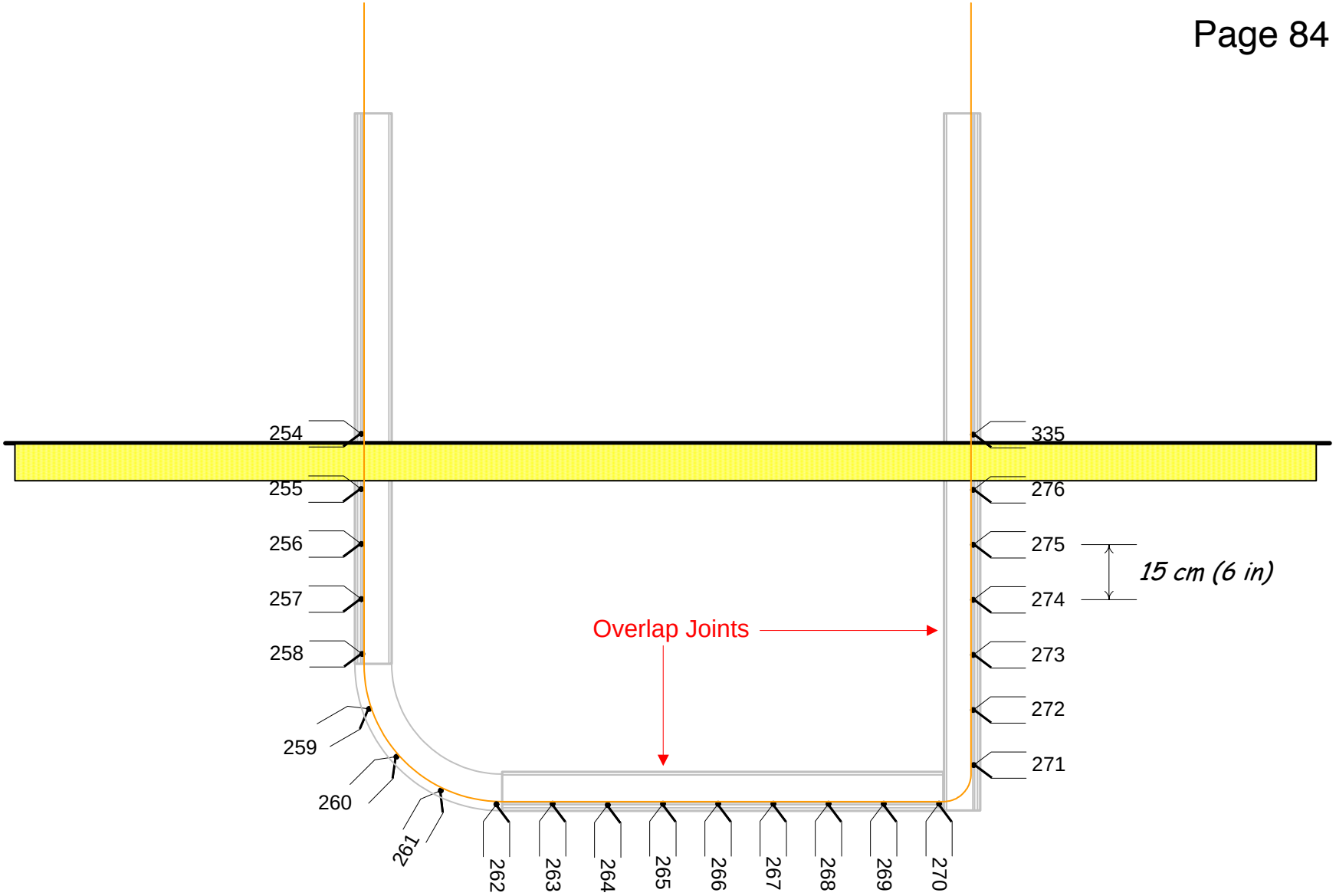

Test Specimen 2D – Empty 36-inch cable tray thermocouple locations and tag numbers on bare #8 copper wire. Note: Some uncertainty in exact thermocouple locations exists. (Hemyc wrap framed for 2" Air Gap)

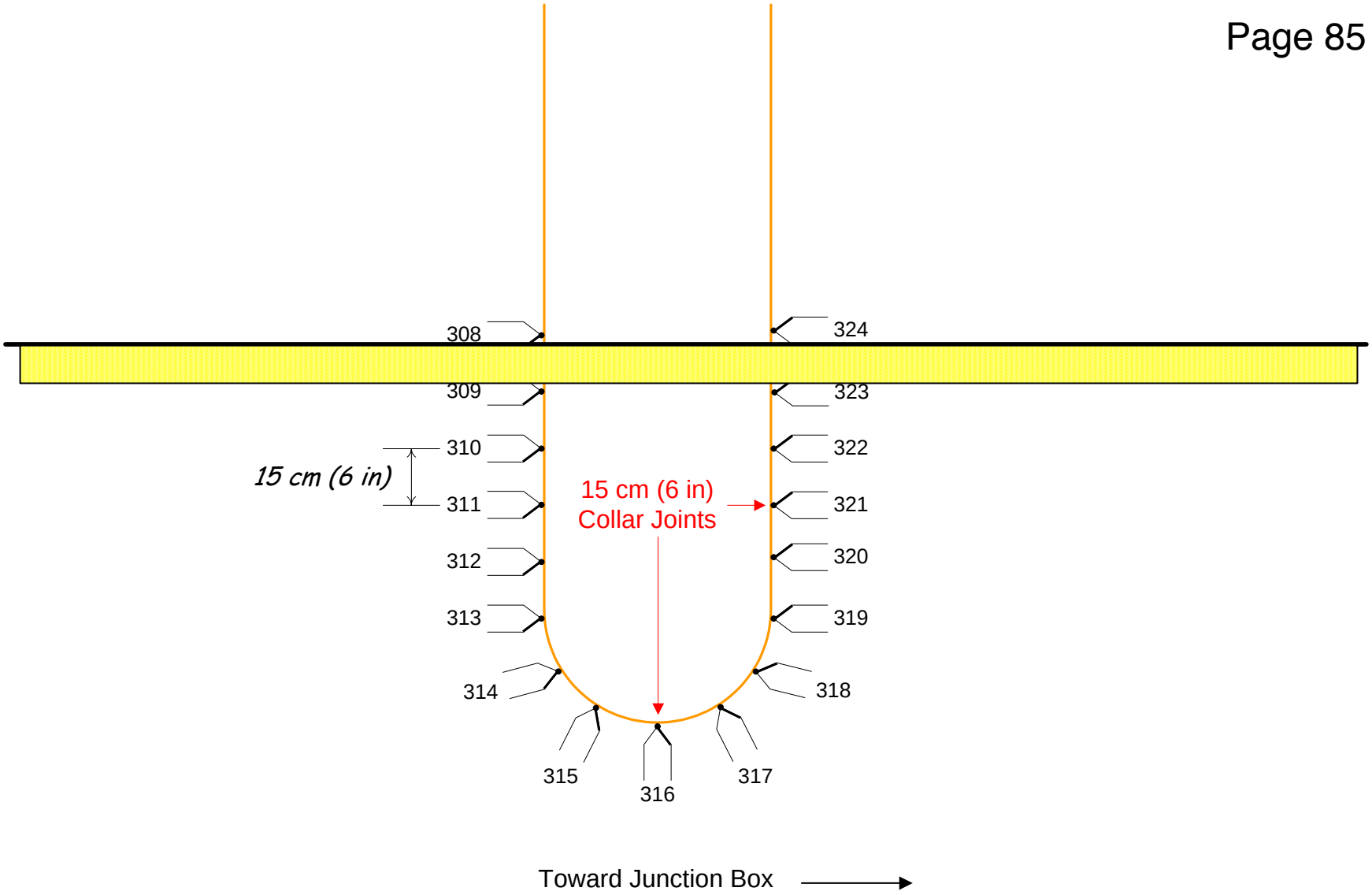

Test Specimen 2E – Cable Drop Loop thermocouple locations and tag numbers. (Direct Attachment Hemyc wraps and banded.)

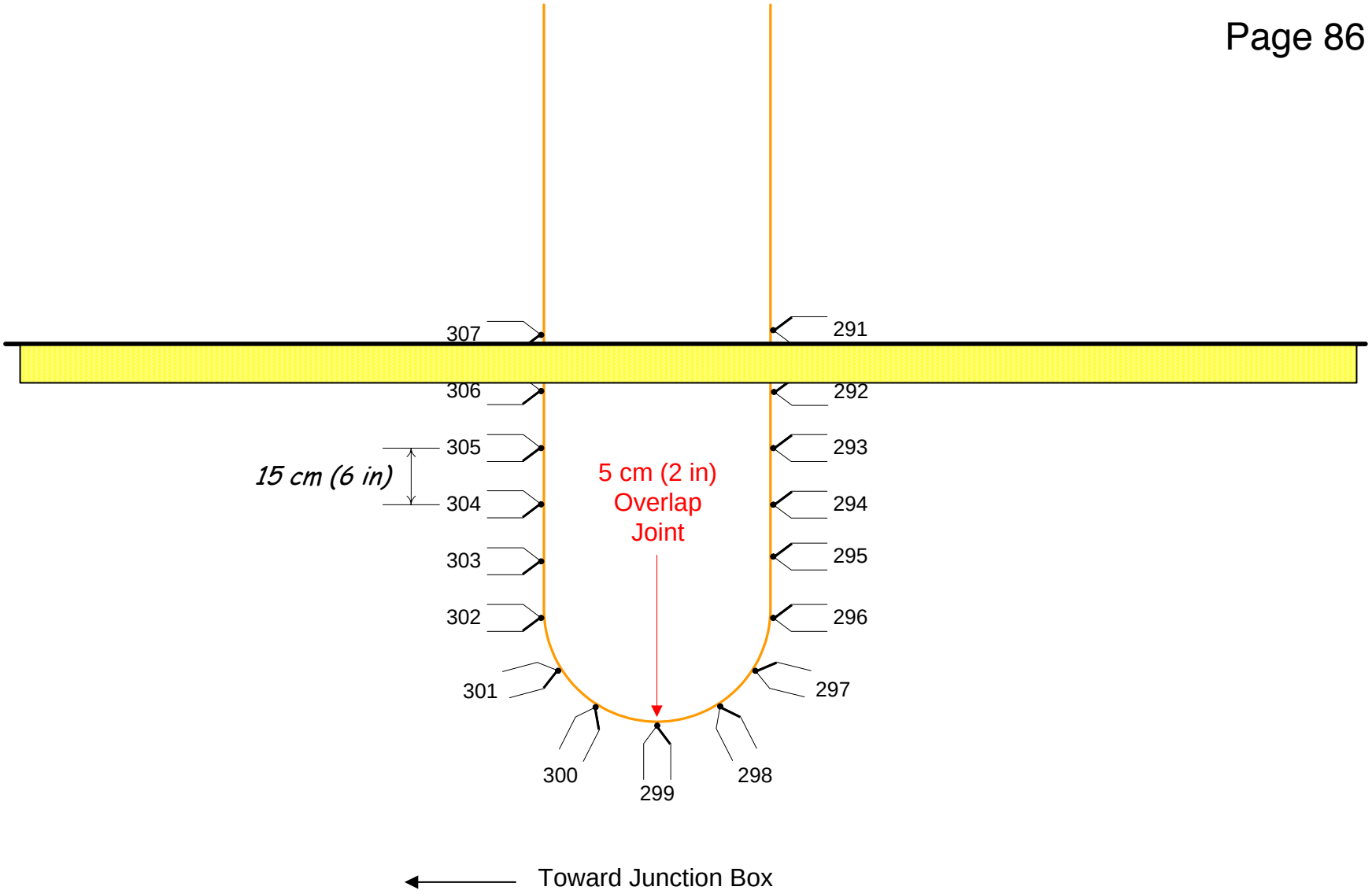

Test Specimen 2F – Cable Drop Loop thermocouple locations and tag numbers. (Hemyc wrap framed for 2” Air Gap and banded.)

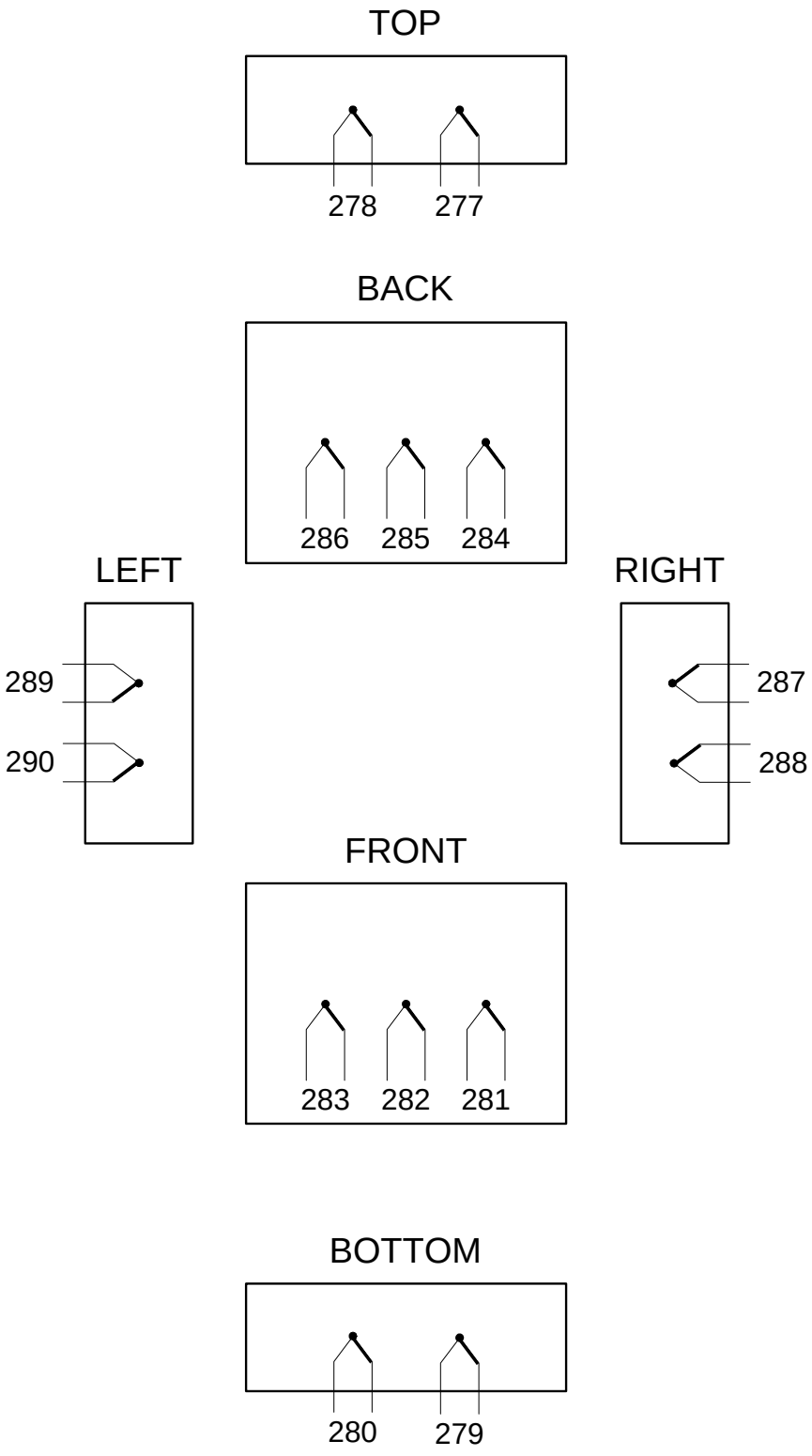

Test Specimen 2G – Junction box thermocouple locations and tag numbers. Note: Back panel is transparent to show correct orientation of thermocouple locations. (Direct Attachment Hemyc wraps and banded.)

Appendix D

TEST DATA

Project No. 14790-123264
Sandia National Laboratories
Furnace Interior Temperatures

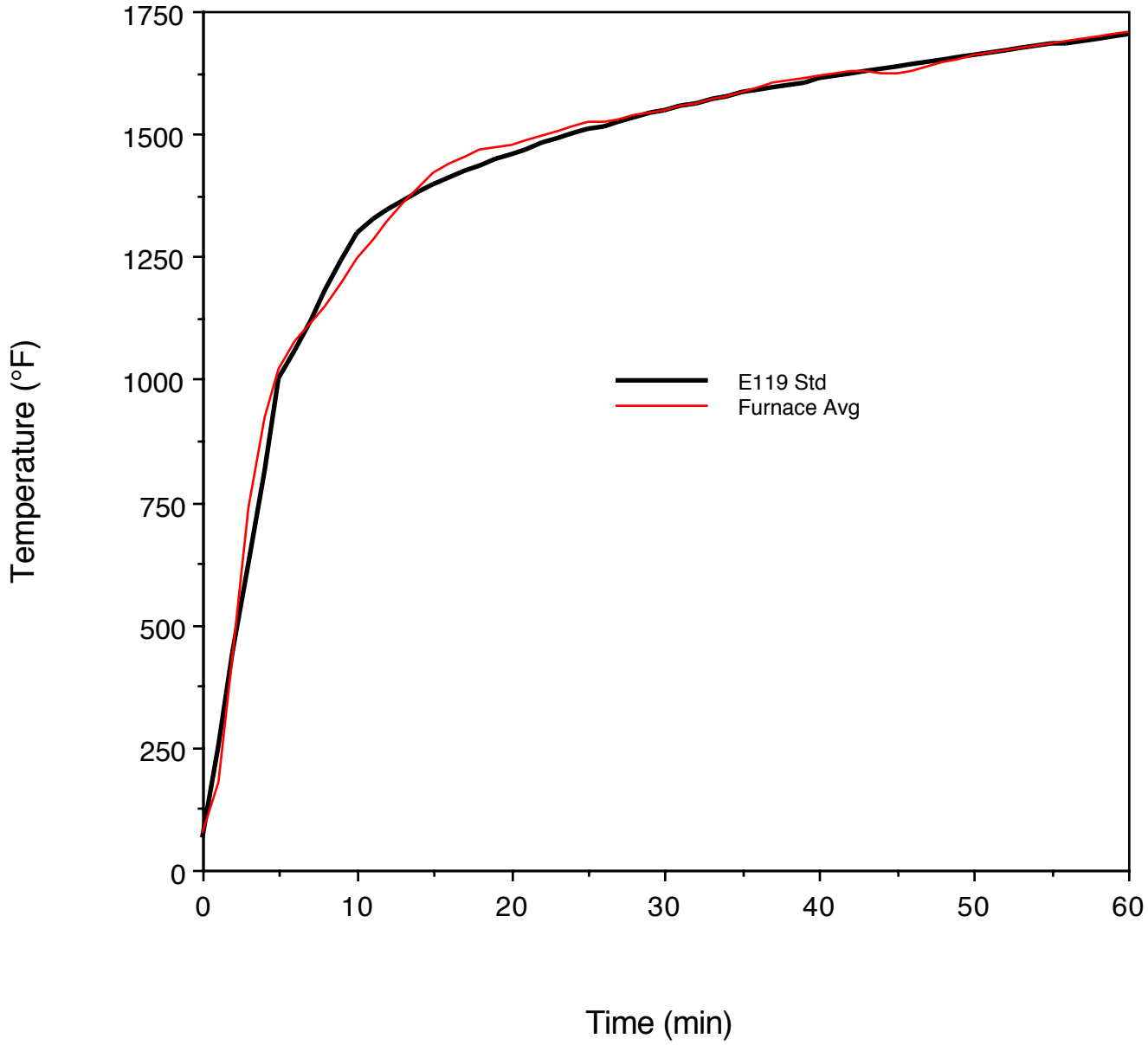

Project No. 14790-123264
Sandia National Laboratories
Item 2A: 12" Tray; Right Rail Min, Avg & Max

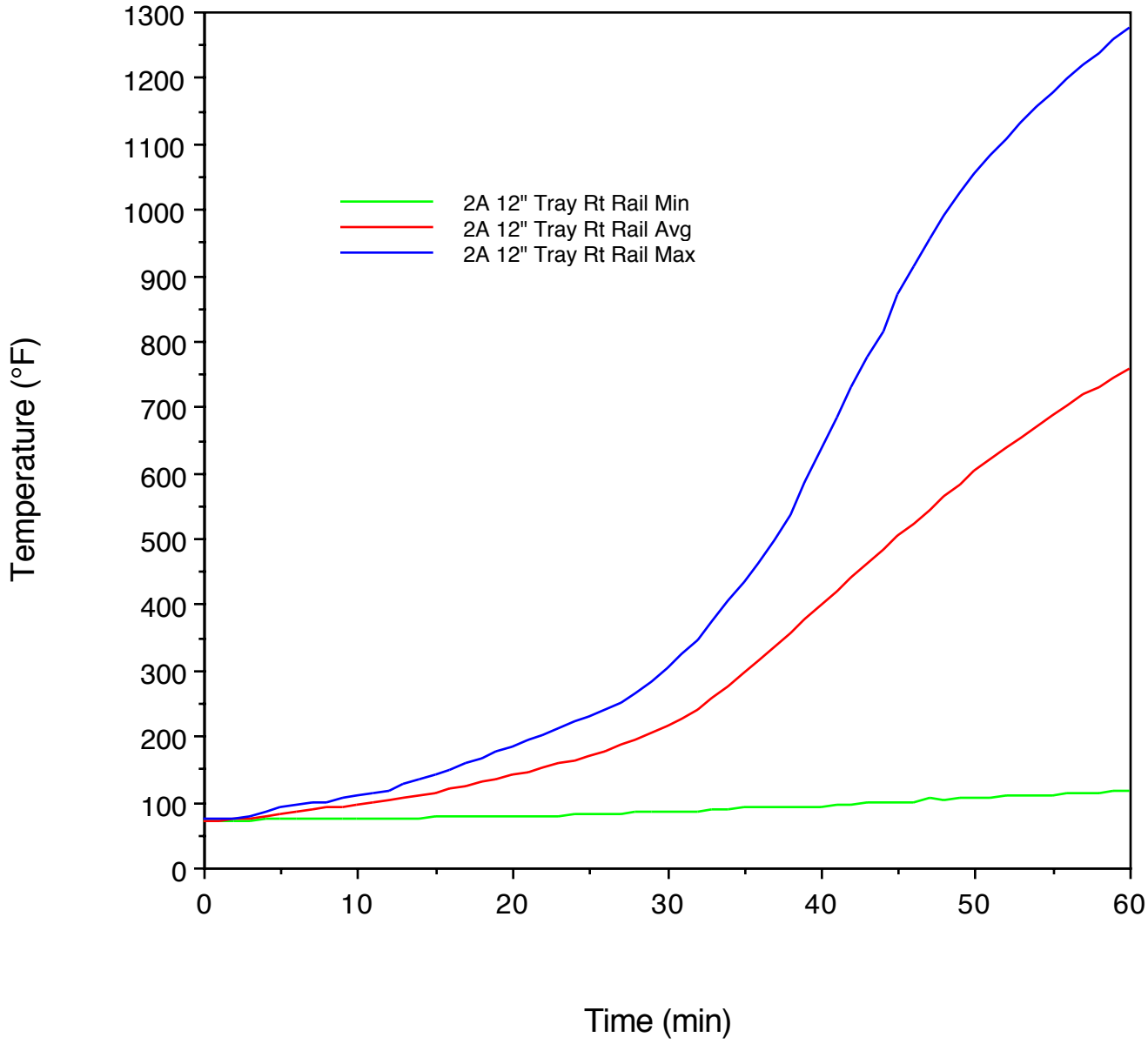

Project No. 14790-123264
Sandia National Laboratories
Item 2A: 12" Tray; Bare #8 Min, Avg & Max

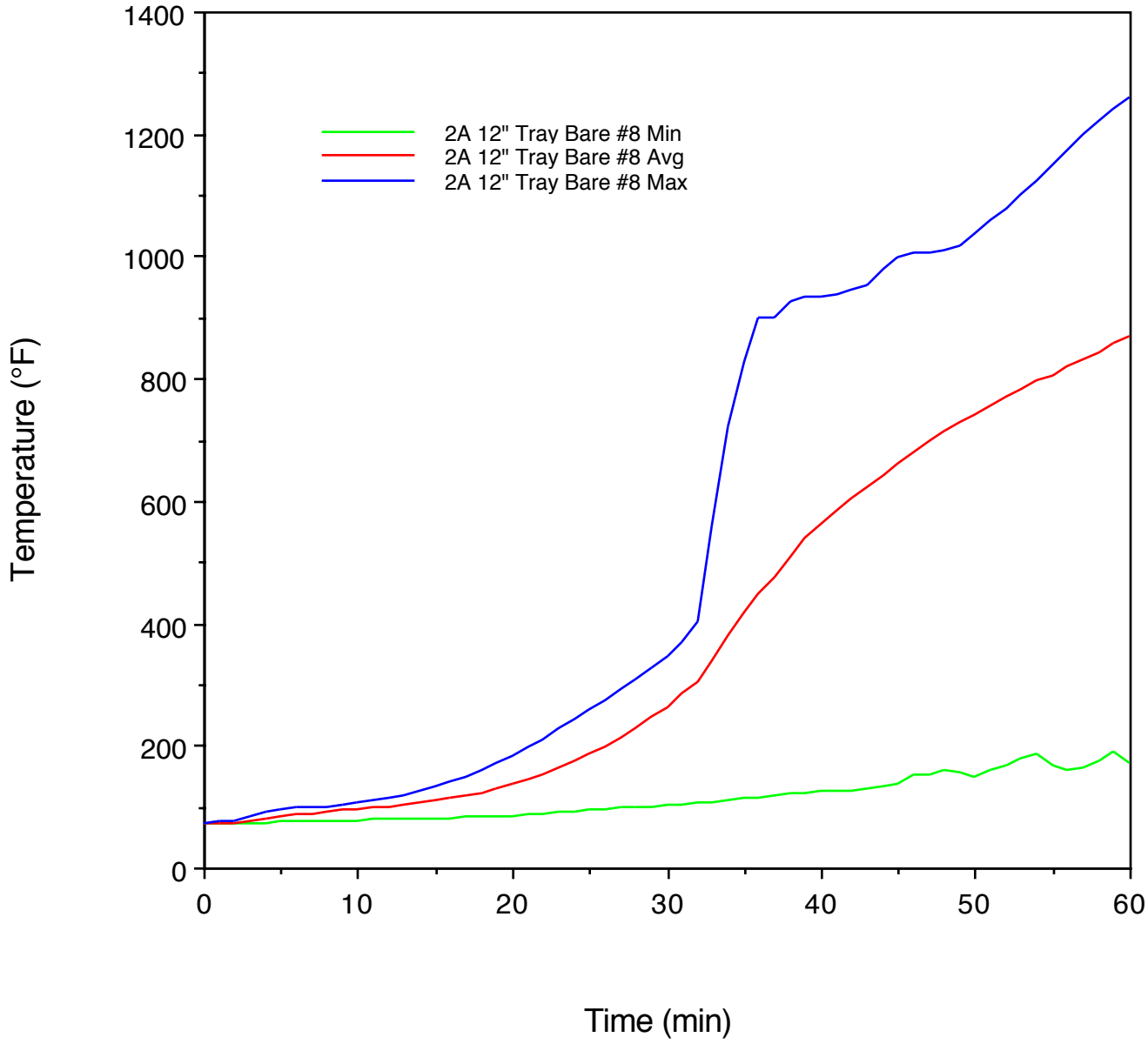

Project No. 14790-123264
Sandia National Laboratories
Item 2A: 12" Tray; Left Rail Min, Avg & Max

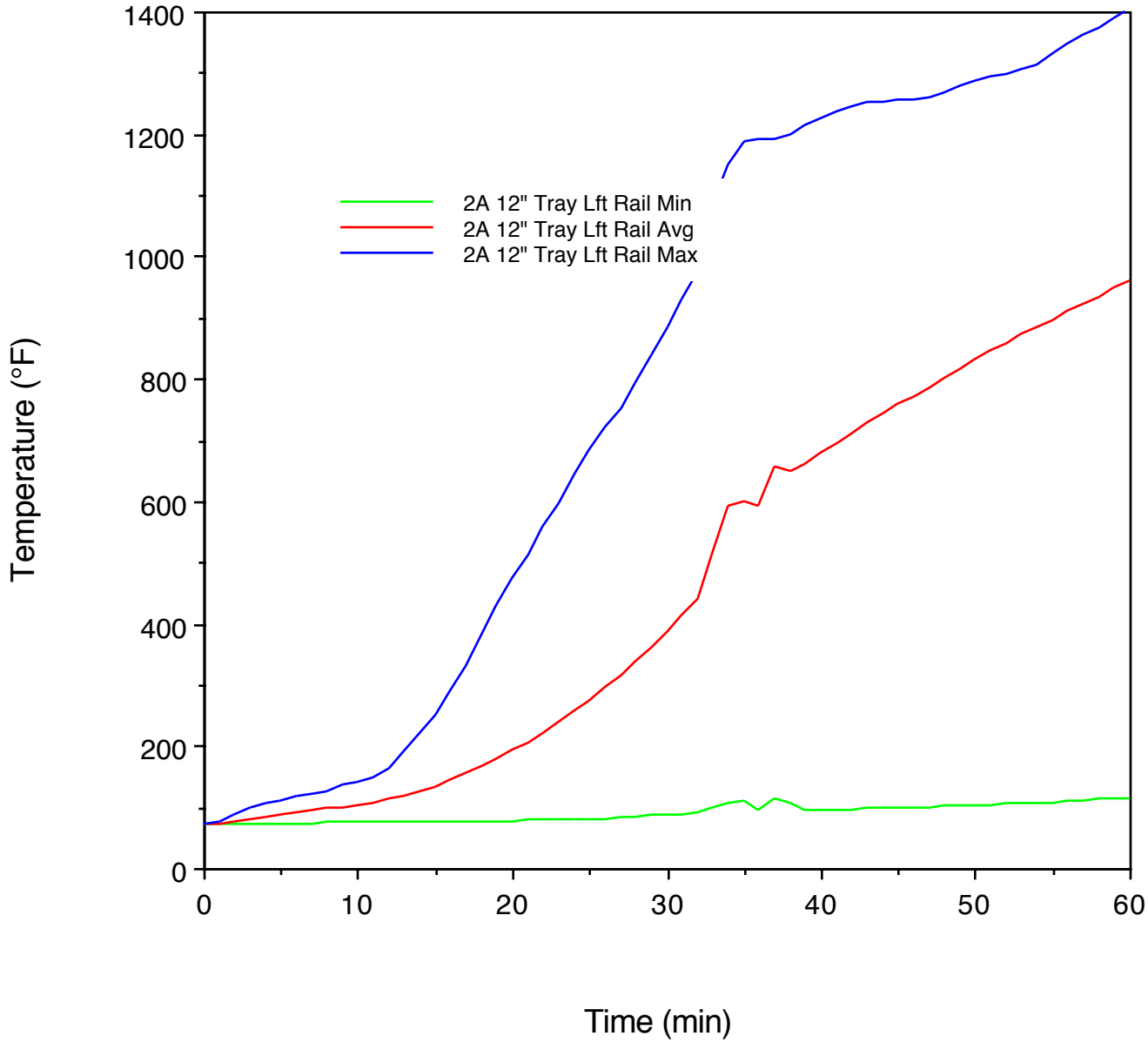

Project No. 14790-123264
Sandia National Laboratories
Item 2B: 12" Tray; Right Rail Min, Avg & Max

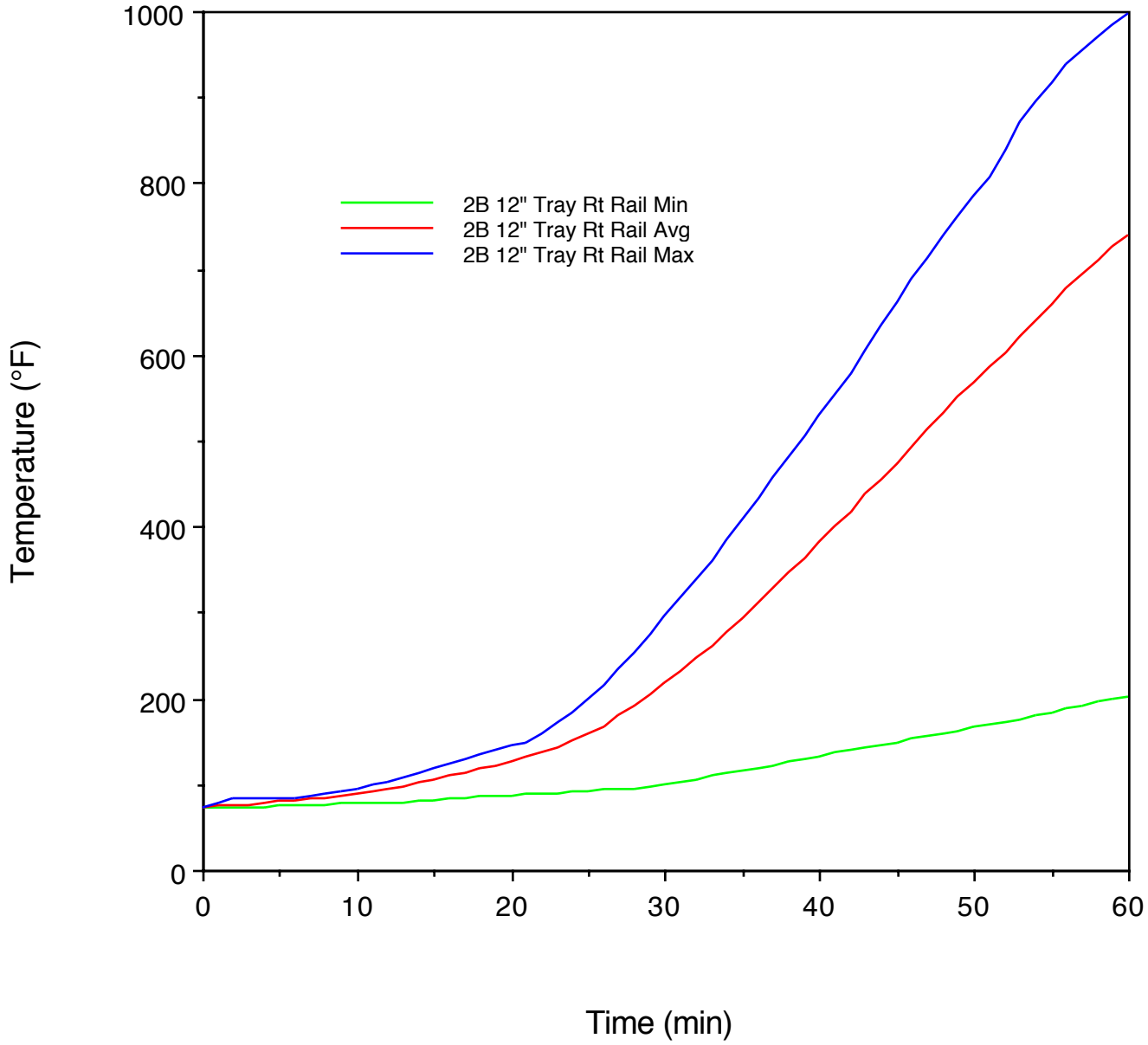

Project No. 14790-123264
Sandia National Laboratories
Item 2B: 12" Tray; Bare #8 Min, Avg & Max

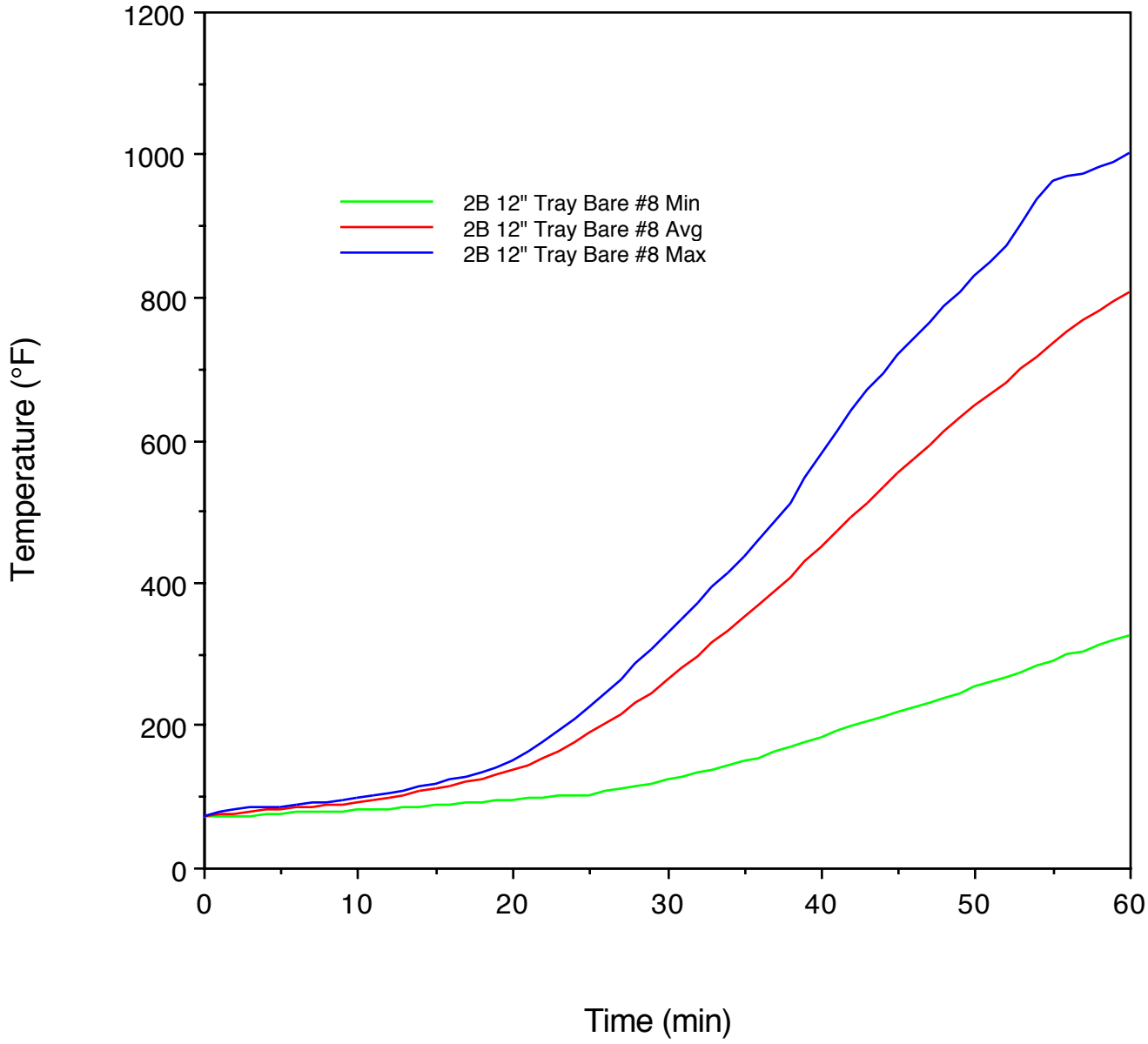

Project No. 14790-123264
Sandia National Laboratories
Item 2B: 12" Tray; Left Rail Min, Avg & Max

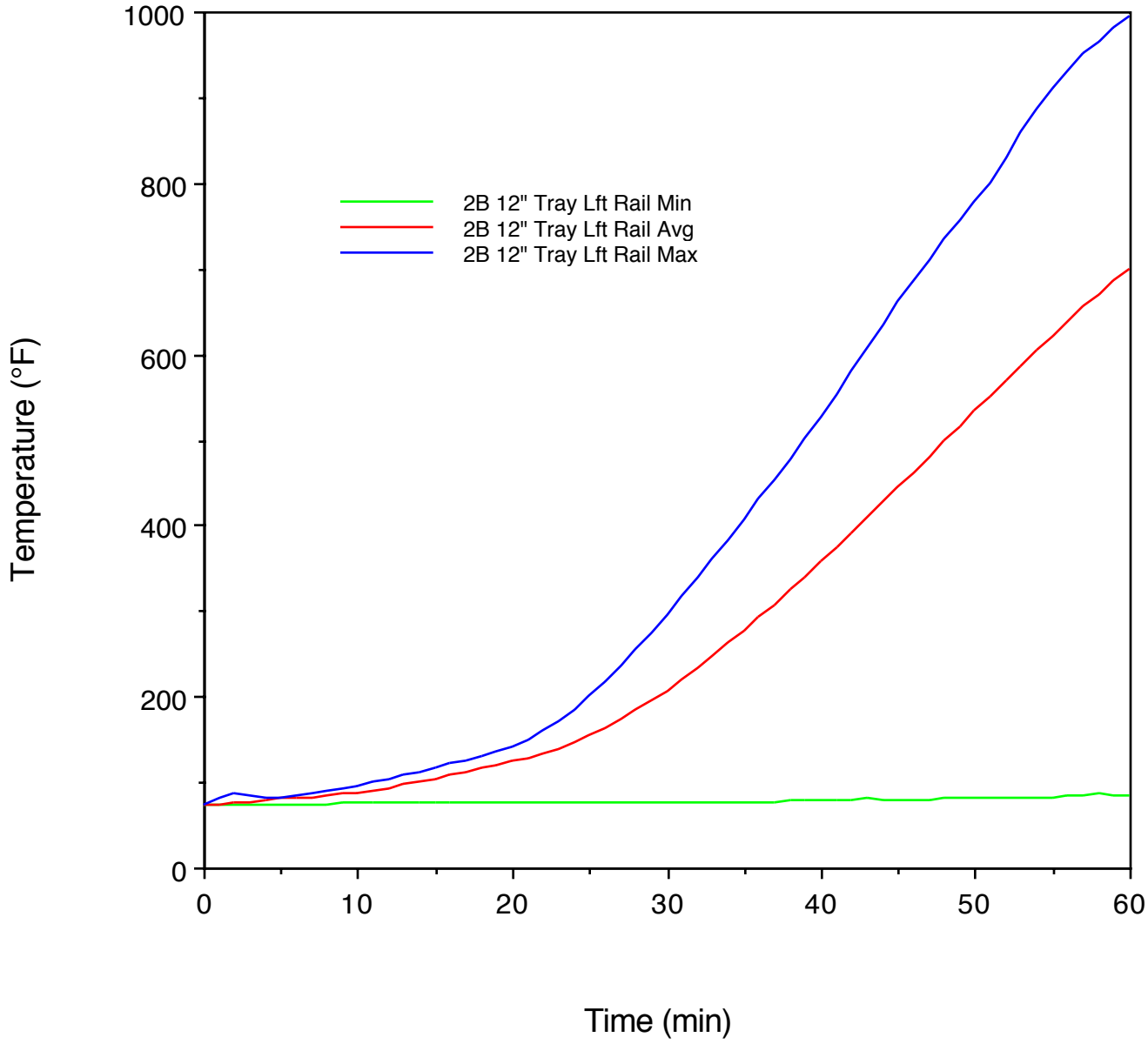

Project No. 14790-123264
Sandia National Laboratories
Item 2C: 36" Tray; Right Rail Min, Avg & Max

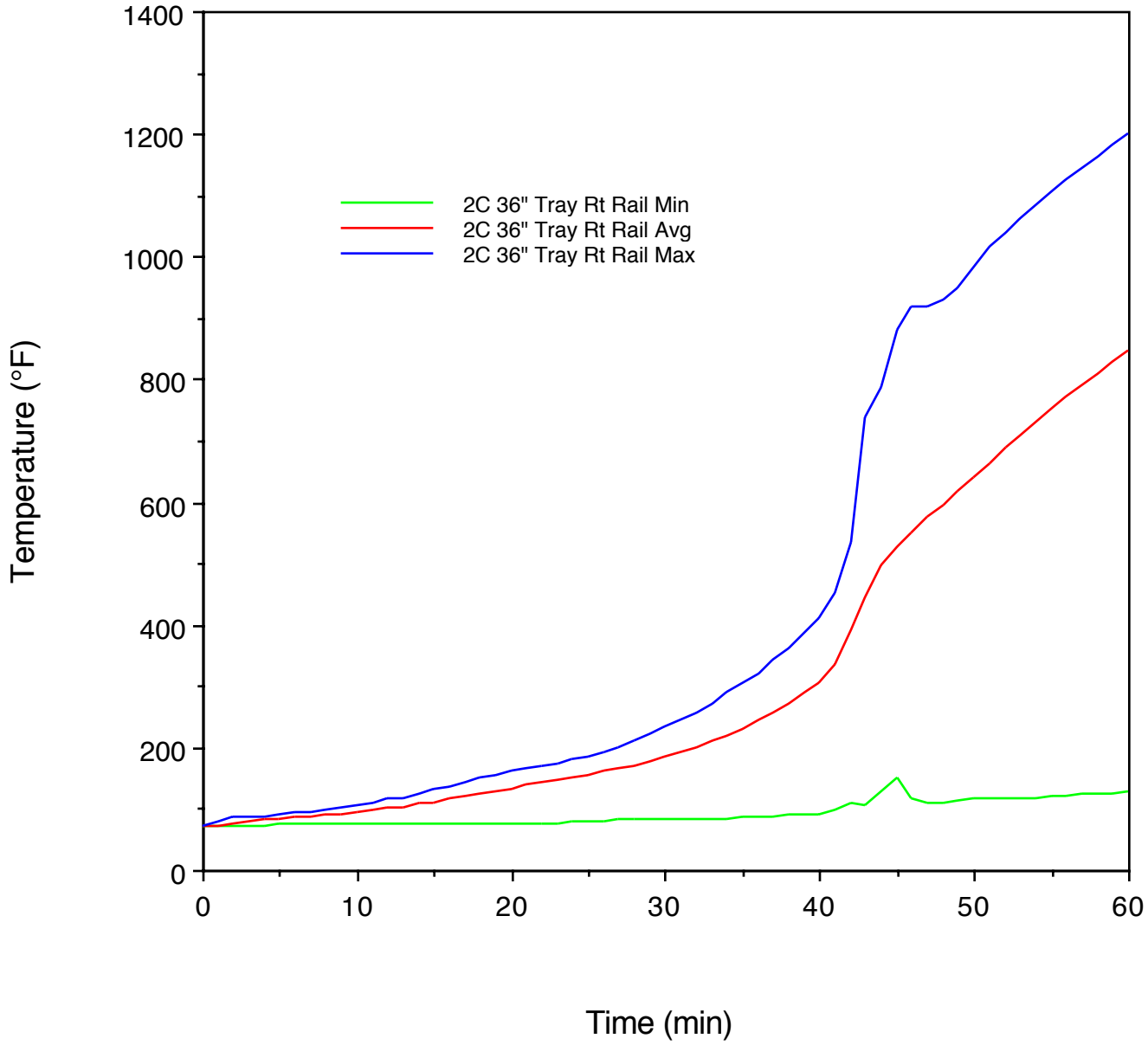

Project No. 14790-123264
Sandia National Laboratories
Item 2C: 36" Tray; Bare #8 Min, Avg & Max

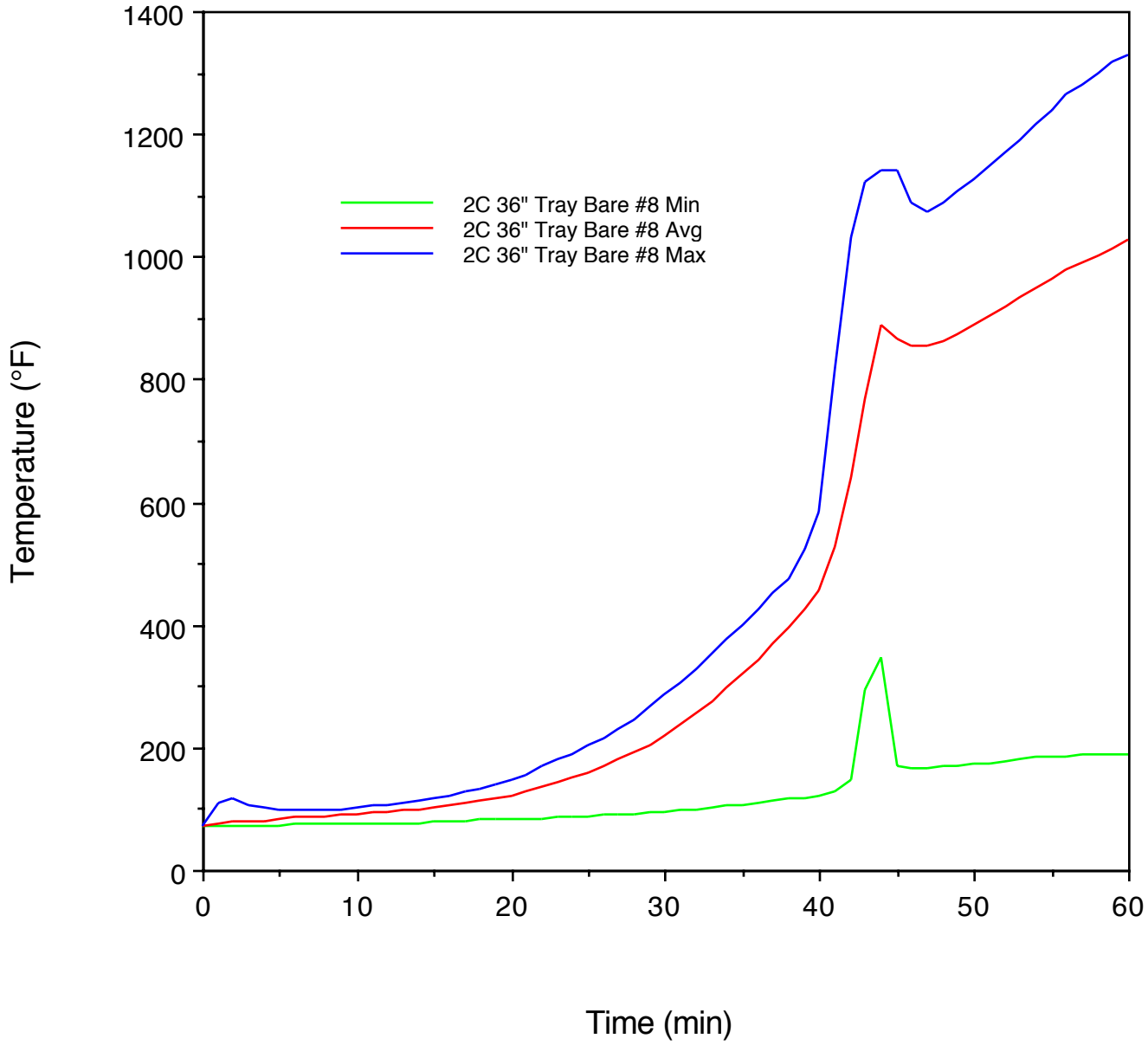

Project No. 14790-123264
Sandia National Laboratories
Item 2C: 36" Tray; Left Rail Min, Avg & Max

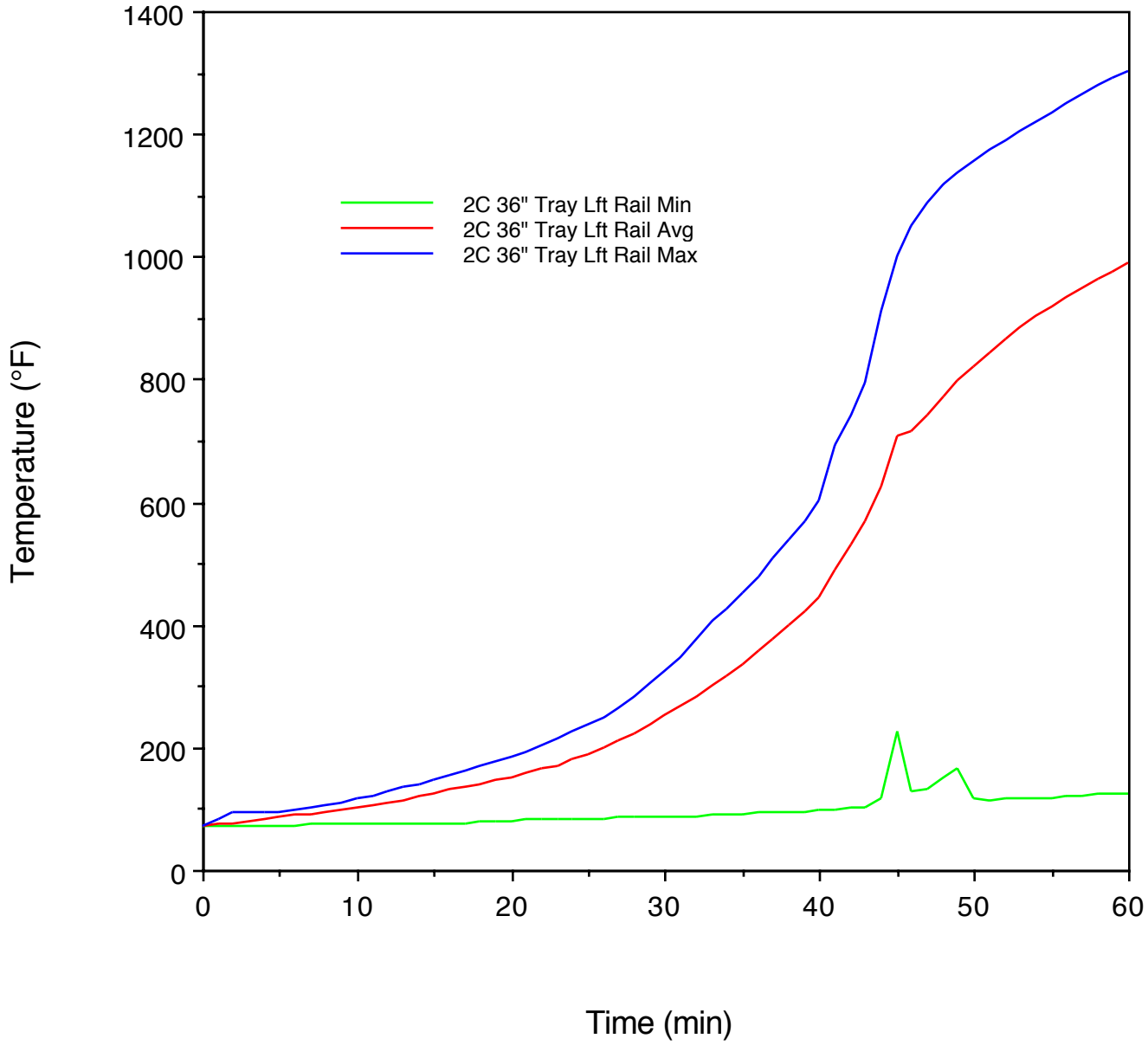

Project No. 14790-123264
Sandia National Laboratories
Item 2D: 36" Tray; Right Rail Min, Avg & Max

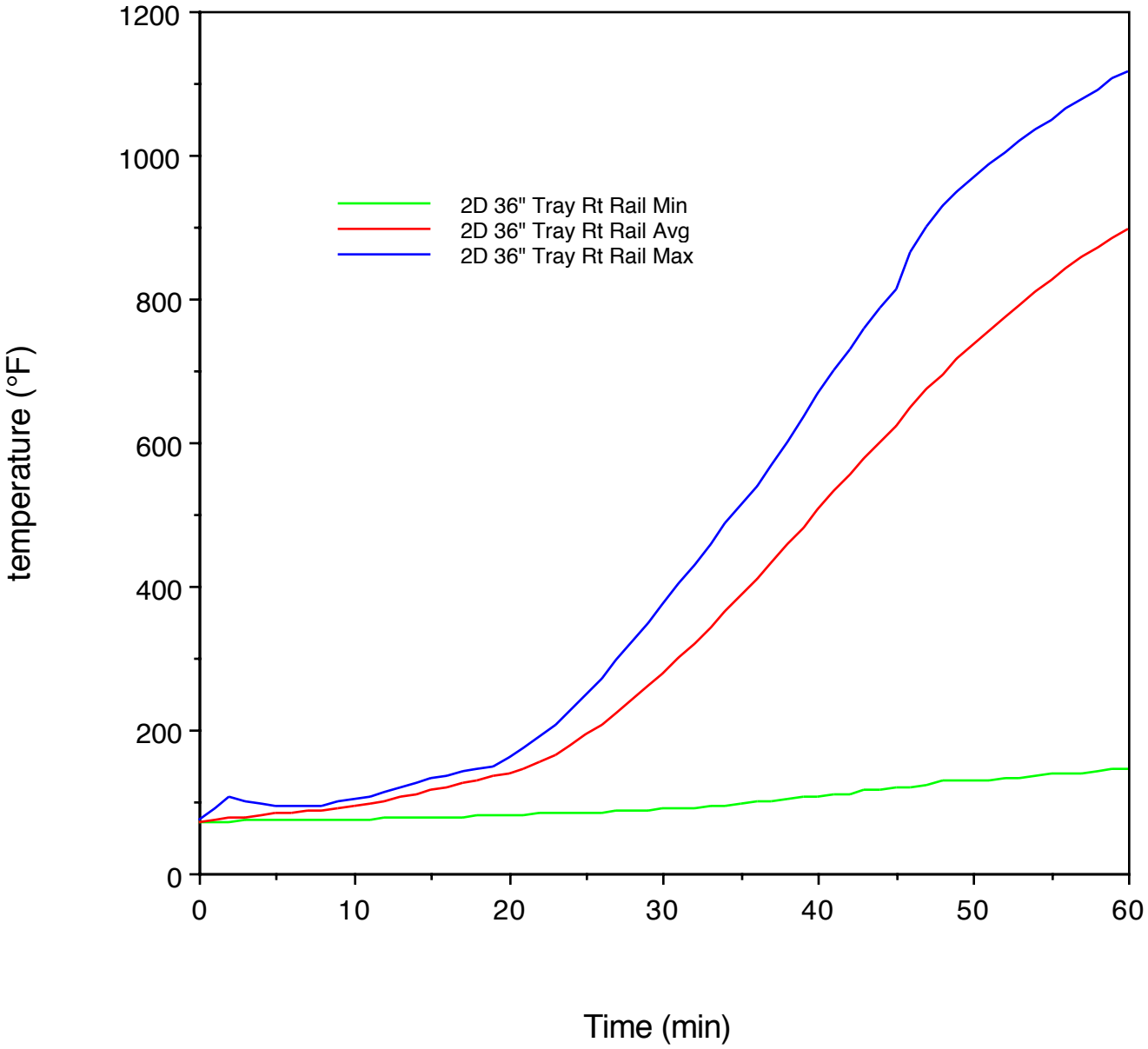

Project No. 14790-123264
Sandia National Laboratories
Item 2D: 36" Tray; Left Rail Min, Avg & Max

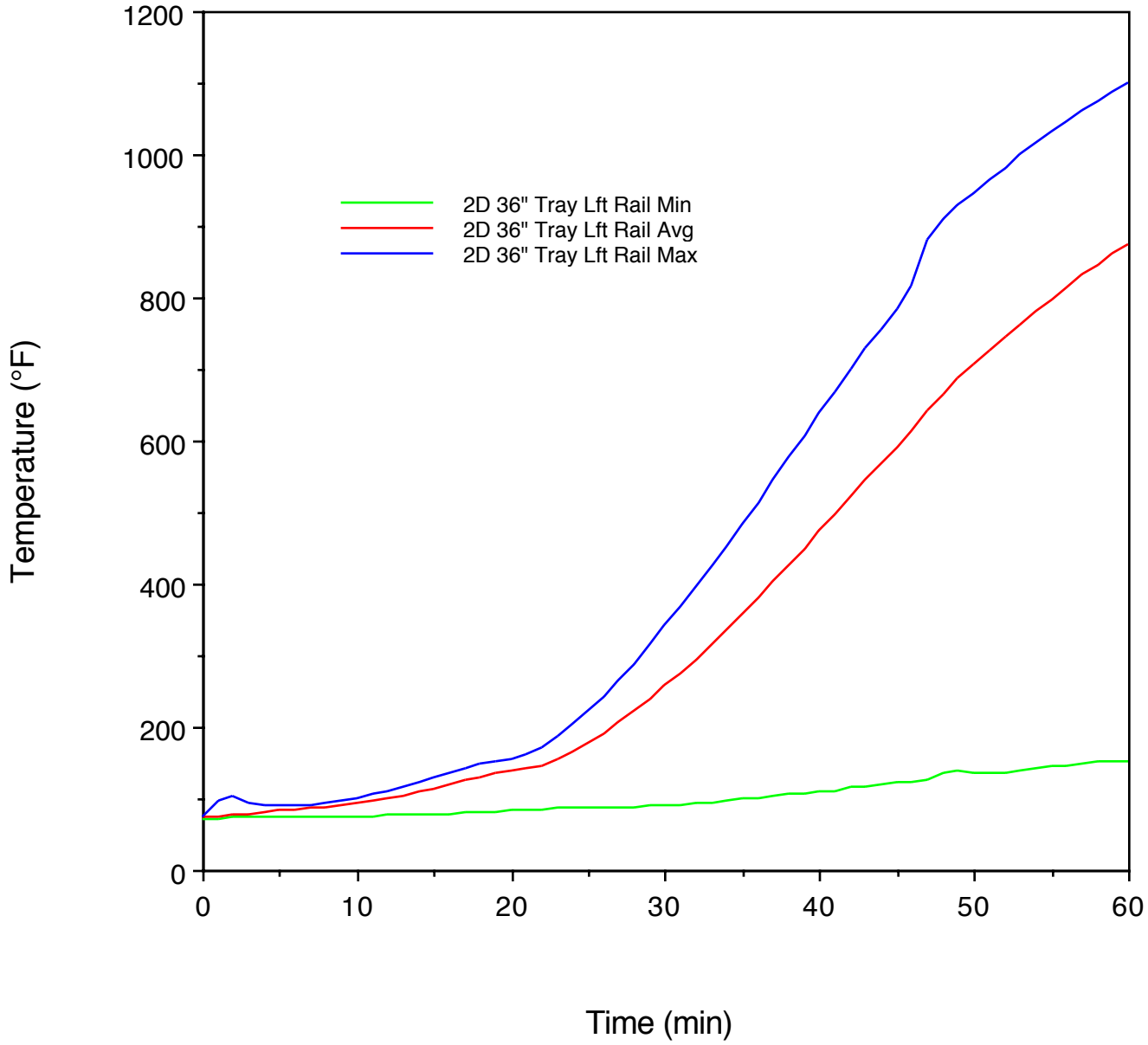

Project No. 14790-123264
Sandia National Laboratories
Item 2D: 36" Tray; Bare #8 Min, Avg & Max

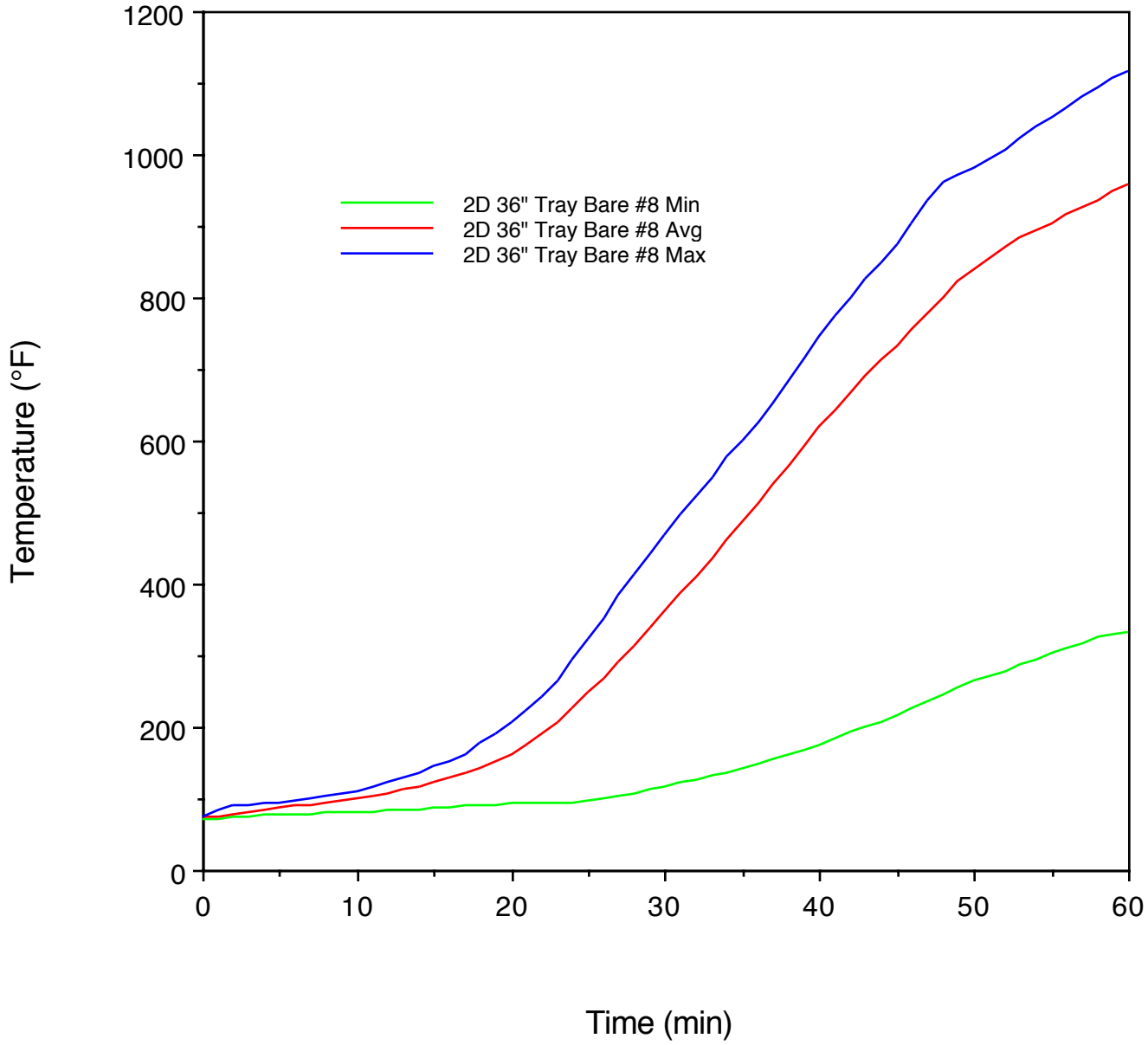

Project No. 14790-123264
Sandia National Laboratories
Item 2E: Air Drop; Bare #8 Min, Avg & Max

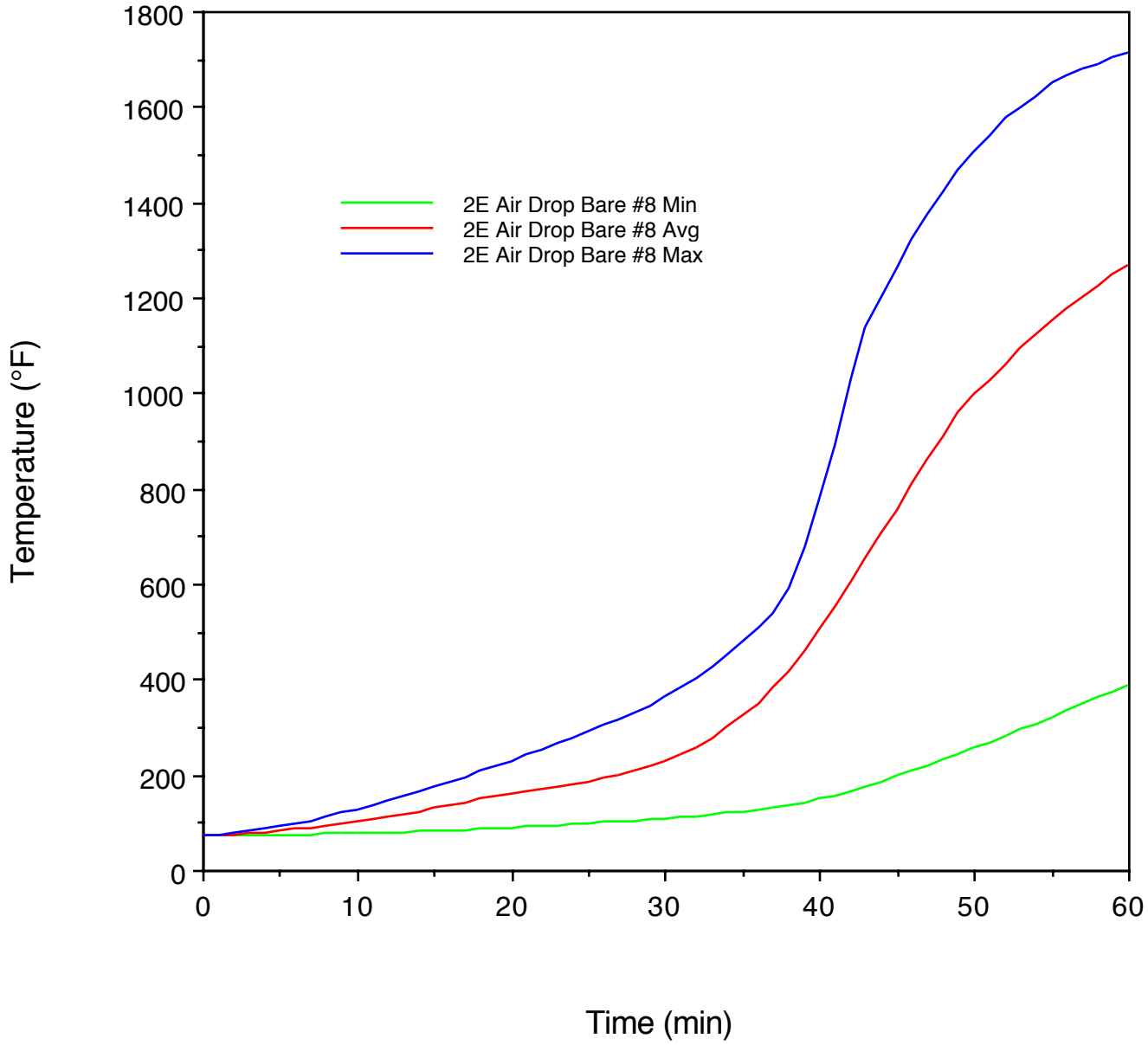

Project No. 14790-123264
Sandia National Laboratories
Item 2F: Air Drop; Bare #8 Min, Avg & Max

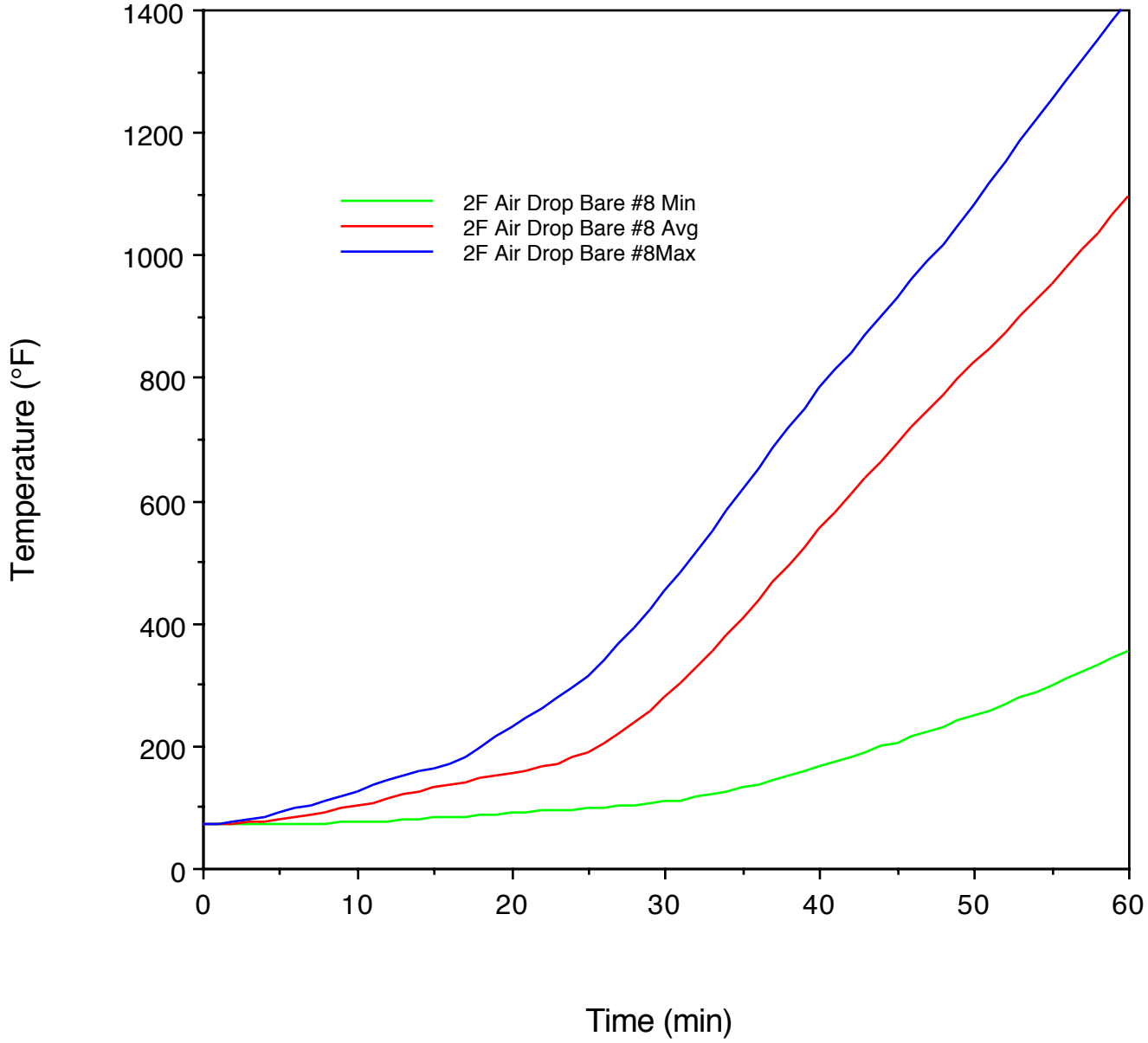

Project No. 14790-123264
Sandia National Laboratories
Item 2G: Junction box Min, Avg & Max

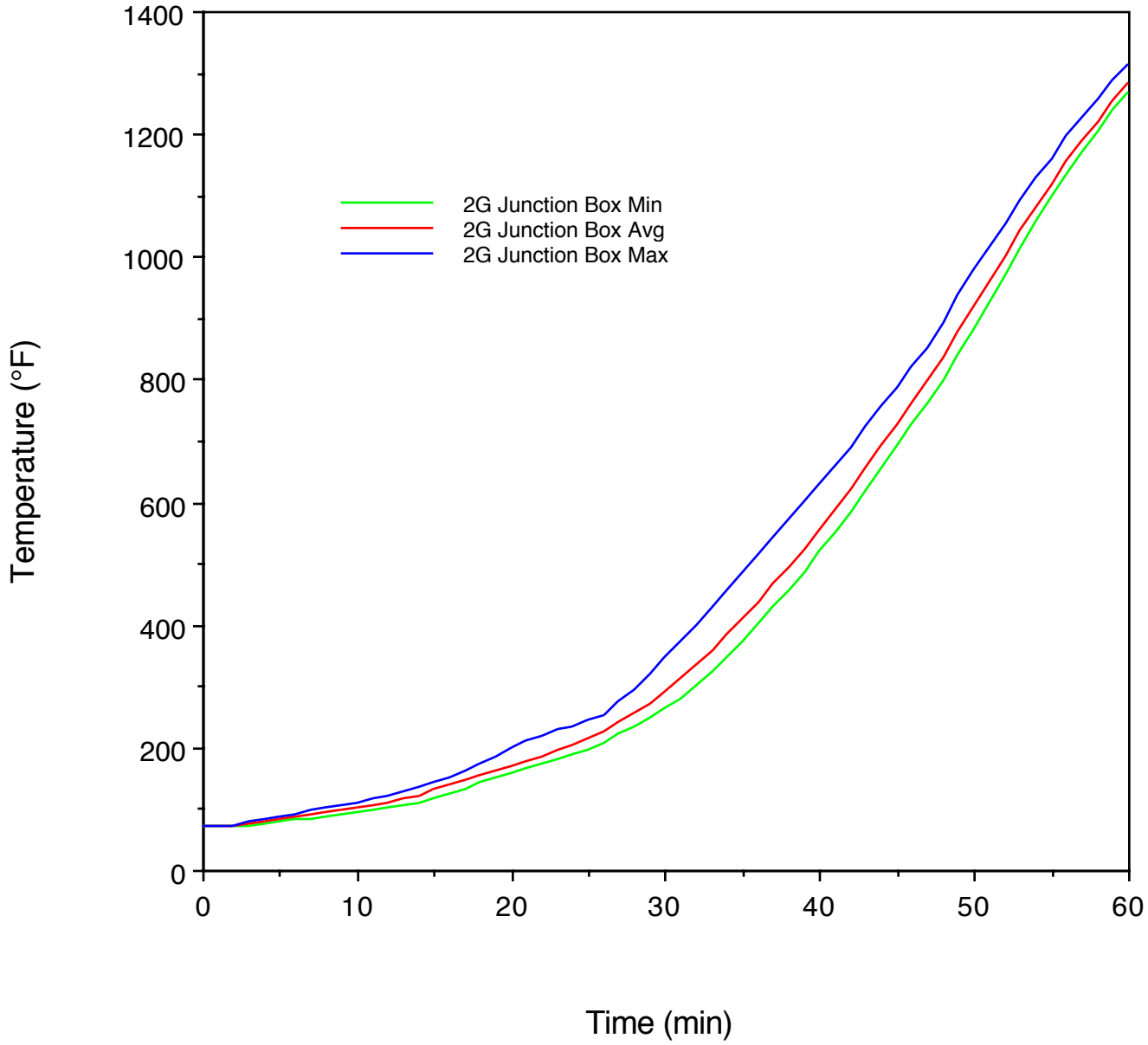

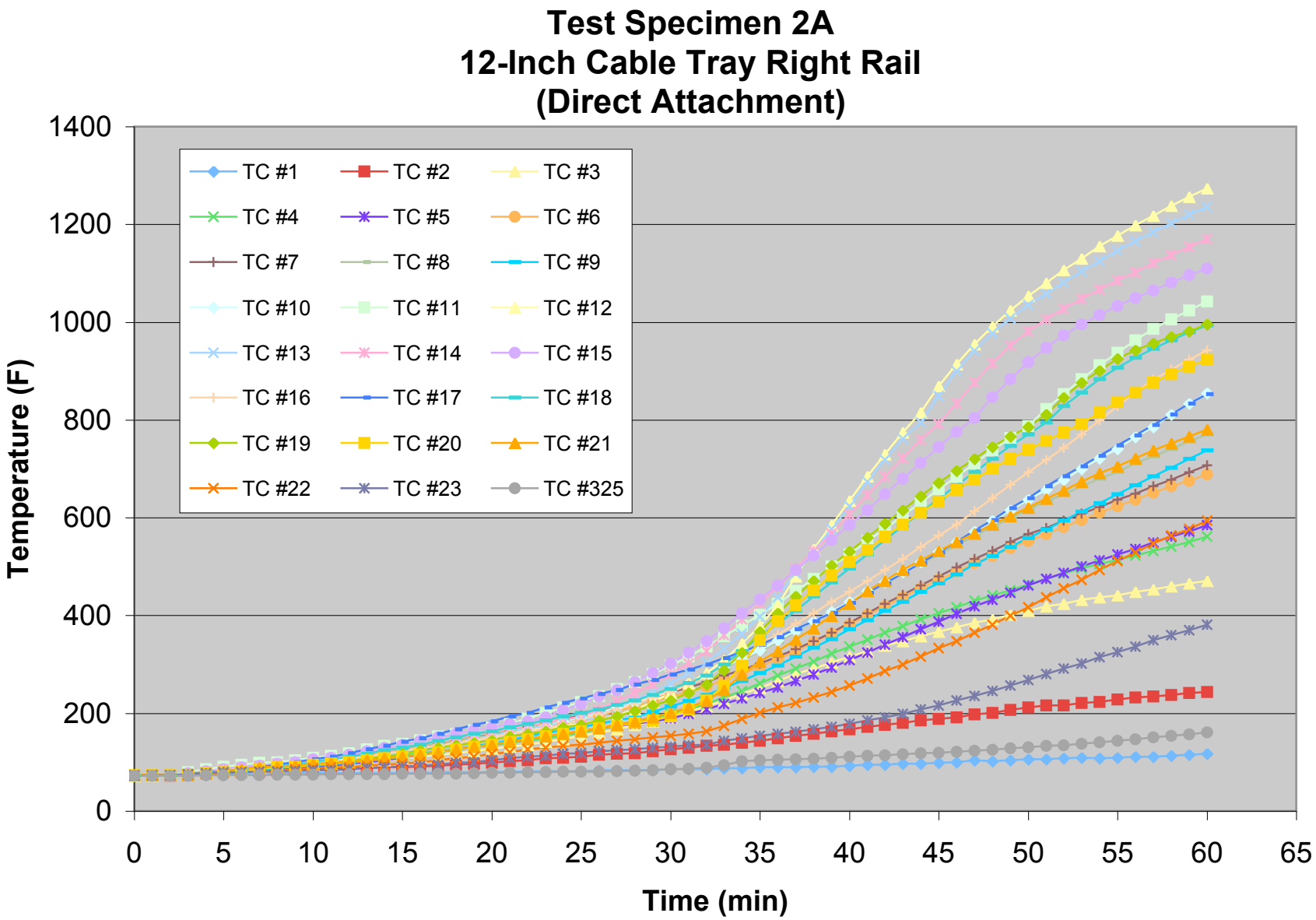
Test Specimen 2A
12-Inch Cable Tray Right Rail
(Direct Attachment)
Temperature (F)
Time (min)
0
200
400
600
800
1000
1200
1400
0
5
10
15
20
25
30
35
40
45
50
55
60
65
TC #1
TC #2
TC #3
TC #4
TC #5
TC #6
TC #7
TC #8
TC #9
TC #10
TC #11
TC #12
TC #13
TC #14
TC #15
TC #16
TC #17
TC #18
TC #19
TC #20
TC #21
TC #22
TC #23
TC #325

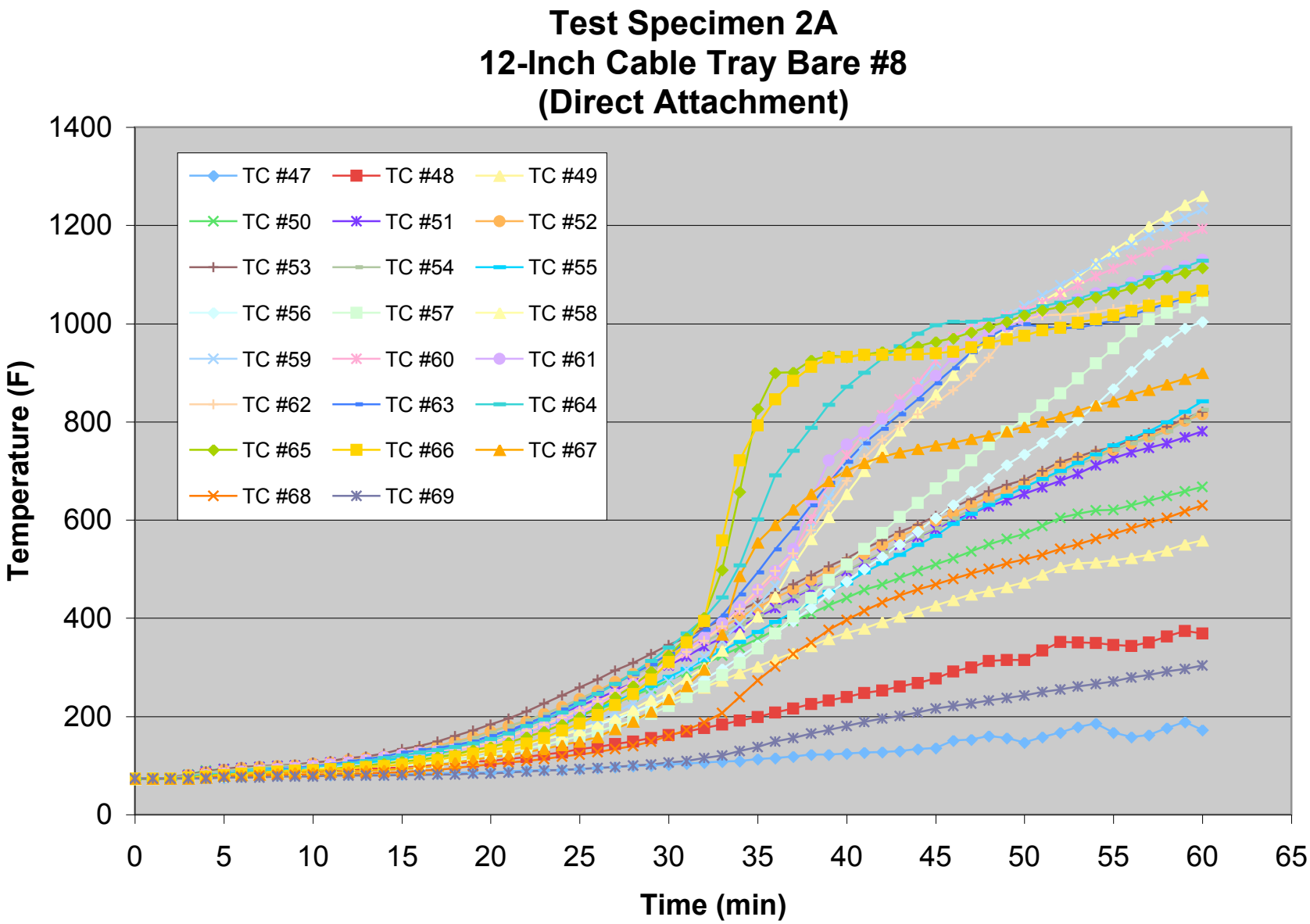
Test Specimen 2A
12-Inch Cable Tray Bare #8
(Direct Attachment)
Temperature (F)
Time (min)
0
200
400
600
800
1000
1200
1400
0
5
10
15
20
25
30
35
40
45
50
55
60
65
TC #47
TC #48
TC #49
TC #50
TC #51
TC #52
TC #53
TC #54
TC #55
TC #56
TC #57
TC #58
TC #59
TC #60
TC #61
TC #62
TC #63
TC #64
TC #65
TC #66
TC #67
TC #68
TC #69

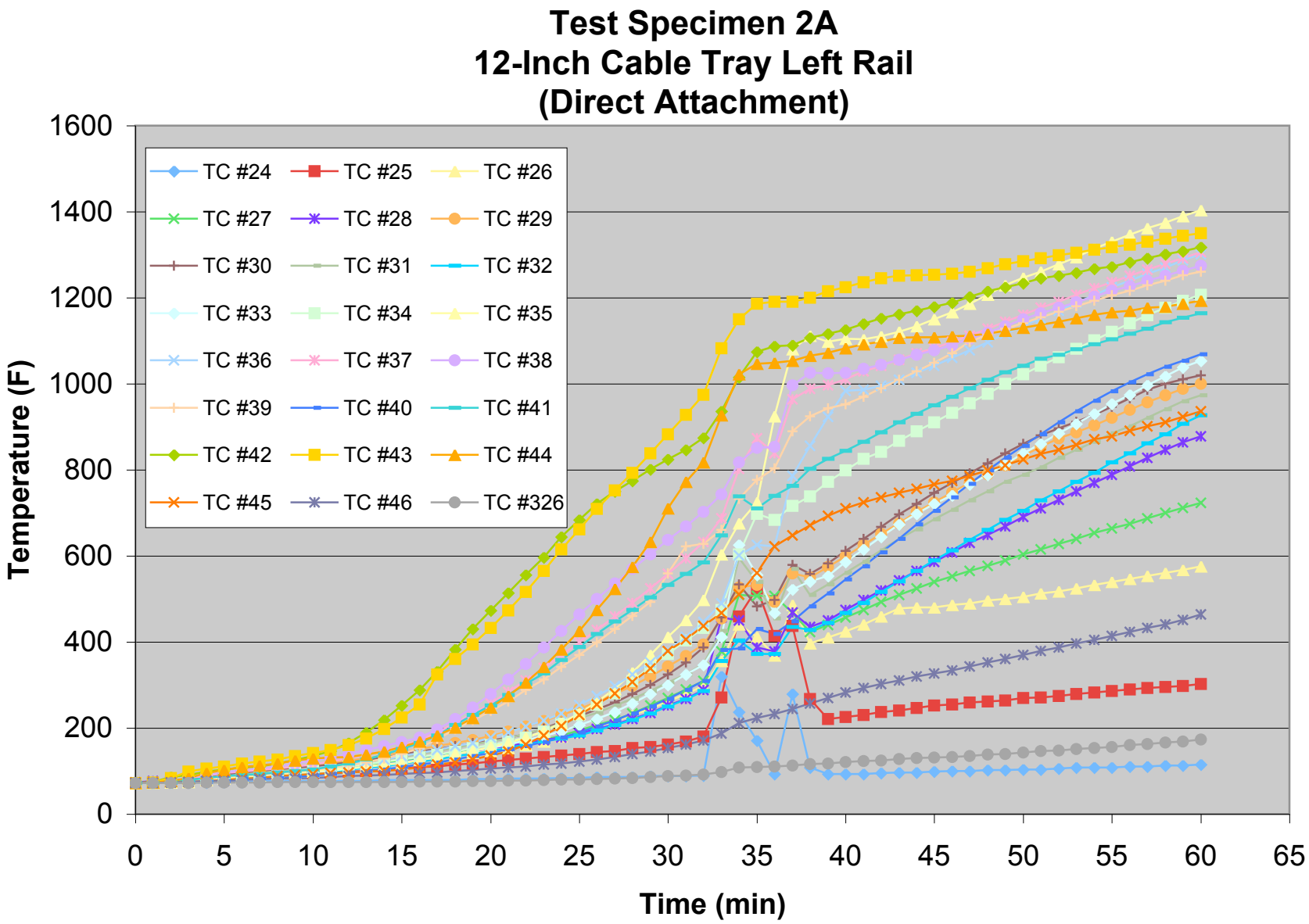
Test Specimen 2A
12-Inch Cable Tray Left Rail
(Direct Attachment)
Temperature (F)
Time (min)
0
200
400
600
800
1000
1200
1400
1600
0
5
10
15
20
25
30
35
40
45
50
55
60
65
TC #24
TC #25
TC #26
TC #27
TC #28
TC #29
TC #30
TC #31
TC #32
TC #33
TC #34
TC #35
TC #36
TC #37
TC #38
TC #39
TC #40
TC #41
TC #42
TC #43
TC #44
TC #45
TC #46
TC #326

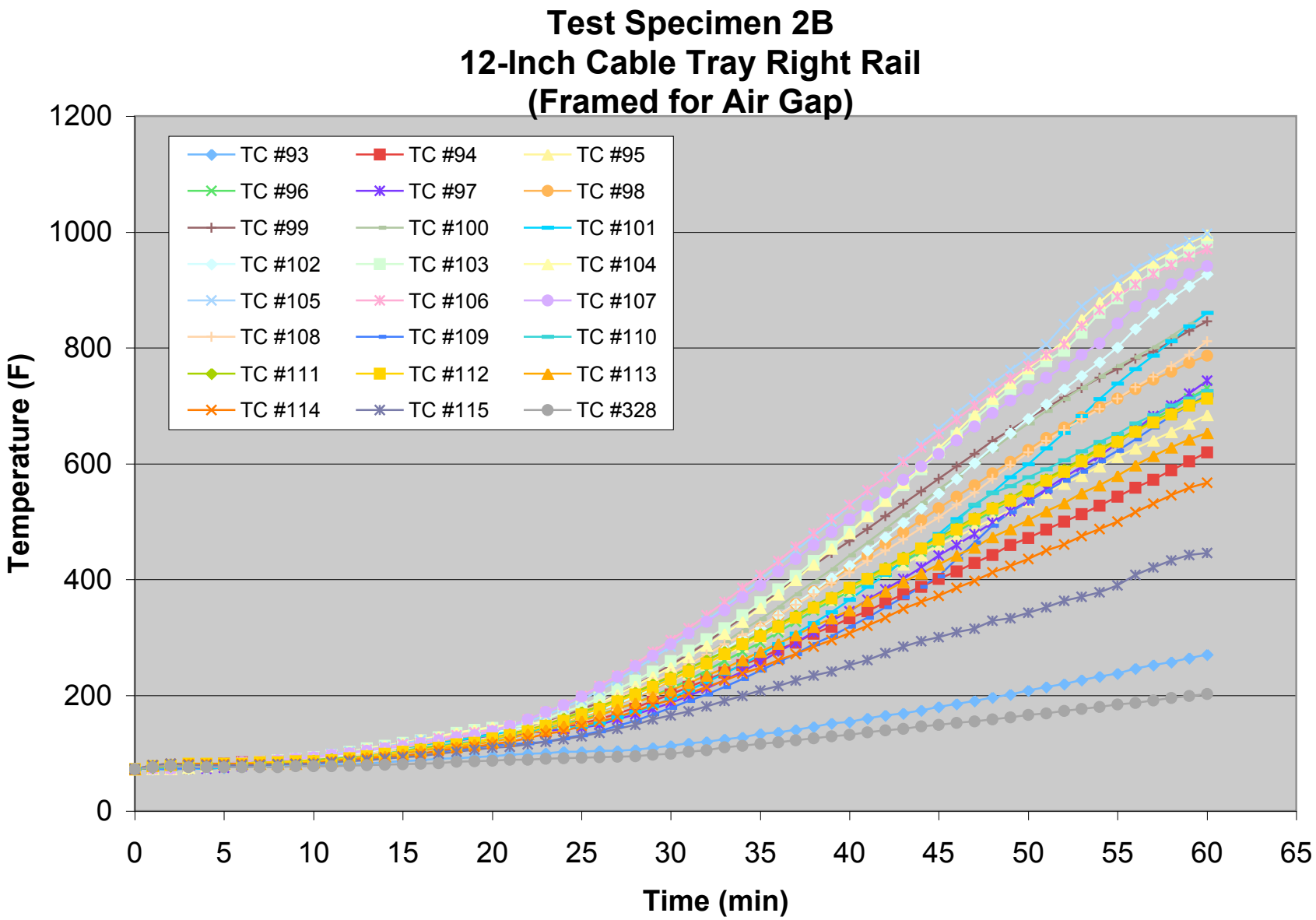
Test Specimen 2B
12-Inch Cable Tray Right Rail
(Framed for Air Gap)
Temperature (F)
Time (min)
0
200
400
600
800
1000
1200
0
5
10
15
20
25
30
35
40
45
50
55
60
65
TC #93
TC #94
TC #95
TC #96
TC #97
TC #98
TC #99
TC #100
TC #101
TC #102
TC #103
TC #104
TC #105
TC #106
TC #107
TC #108
TC #109
TC #110
TC #111
TC #112
TC #113
TC #114
TC #115
TC #328

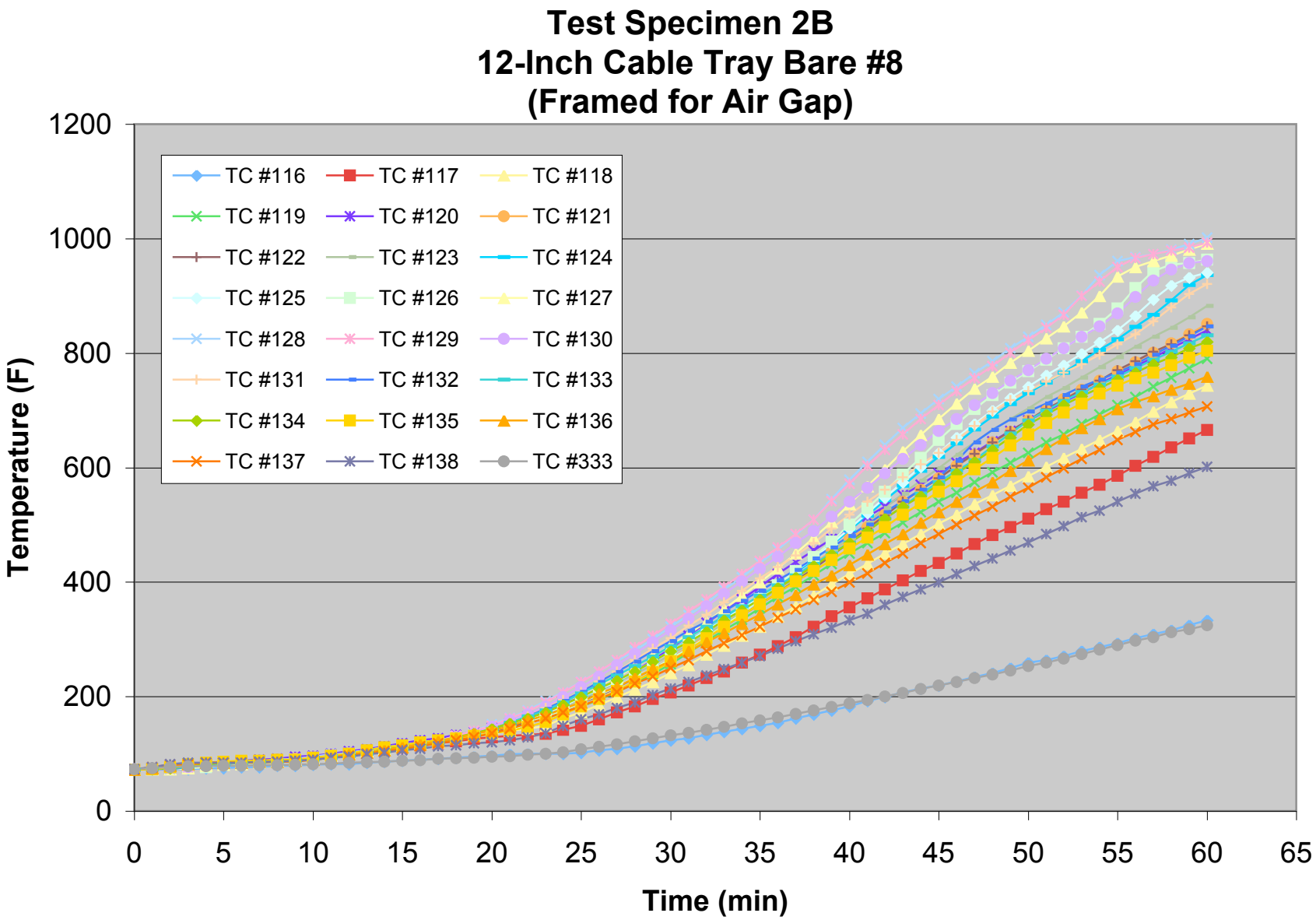
Test Specimen 2B
12-Inch Cable Tray Bare #8
(Framed for Air Gap)
Temperature (F)
Time (min)
0
200
400
600
800
1000
1200
0
5
10
15
20
25
30
35
40
45
50
55
60
65
TC #116
TC #117
TC #118
TC #119
TC #120
TC #121
TC #122
TC #123
TC #124
TC #125
TC #126
TC #127
TC #128
TC #129
TC #130
TC #131
TC #132
TC #133
TC #134
TC #135
TC #136
TC #137
TC #138
TC #333

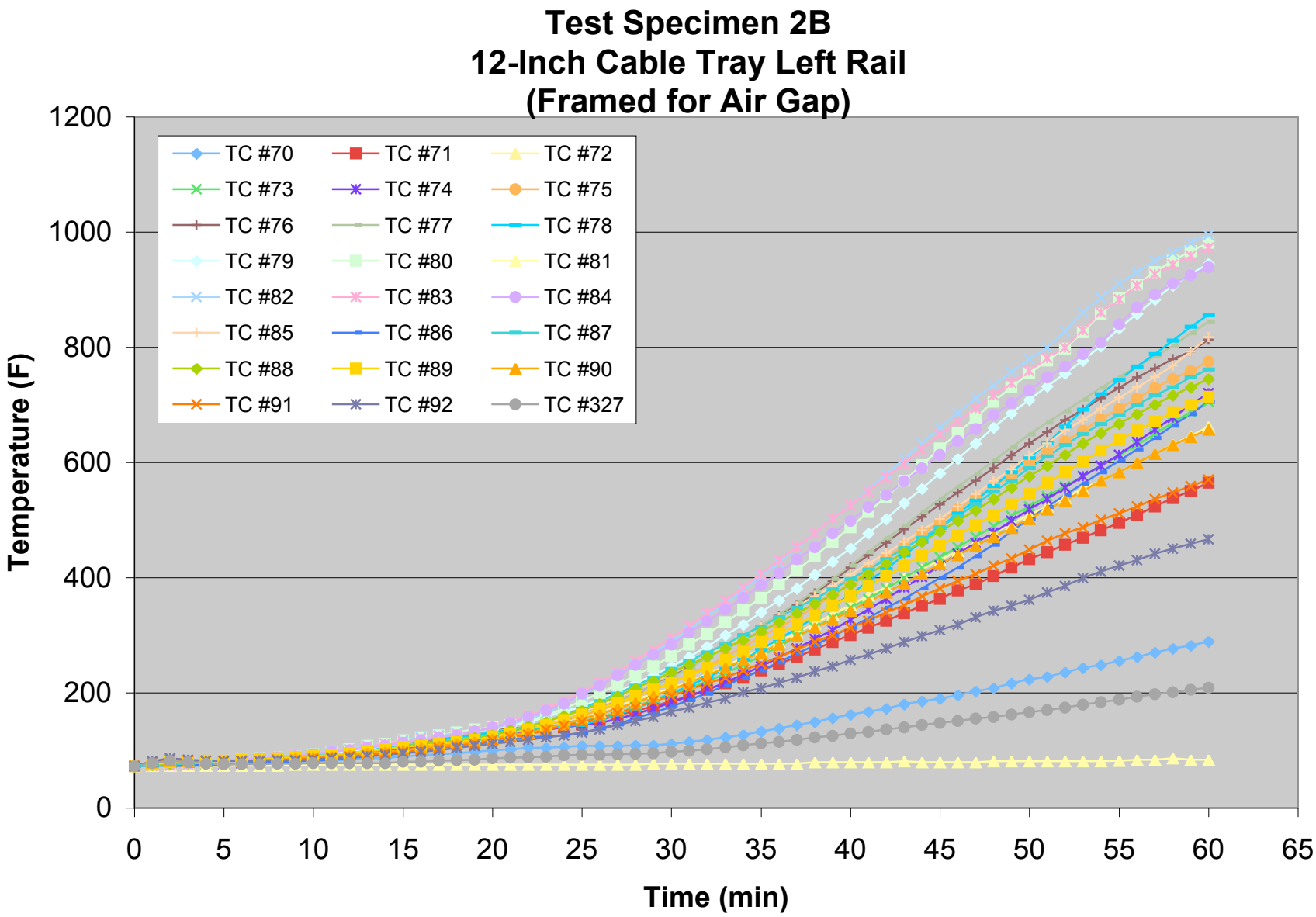
Test Specimen 2B
12-Inch Cable Tray Left Rail
(Framed for Air Gap)
Temperature (F)
Time (min)
0
200
400
600
800
1000
1200
0
5
10
15
20
25
30
35
40
45
50
55
60
65
TC #70
TC #71
TC #72
TC #73
TC #74
TC #75
TC #76
TC #77
TC #78
TC #79
TC #80
TC #81
TC #82
TC #83
TC #84
TC #85
TC #86
TC #87
TC #88
TC #89
TC #90
TC #91
TC #92
TC #327

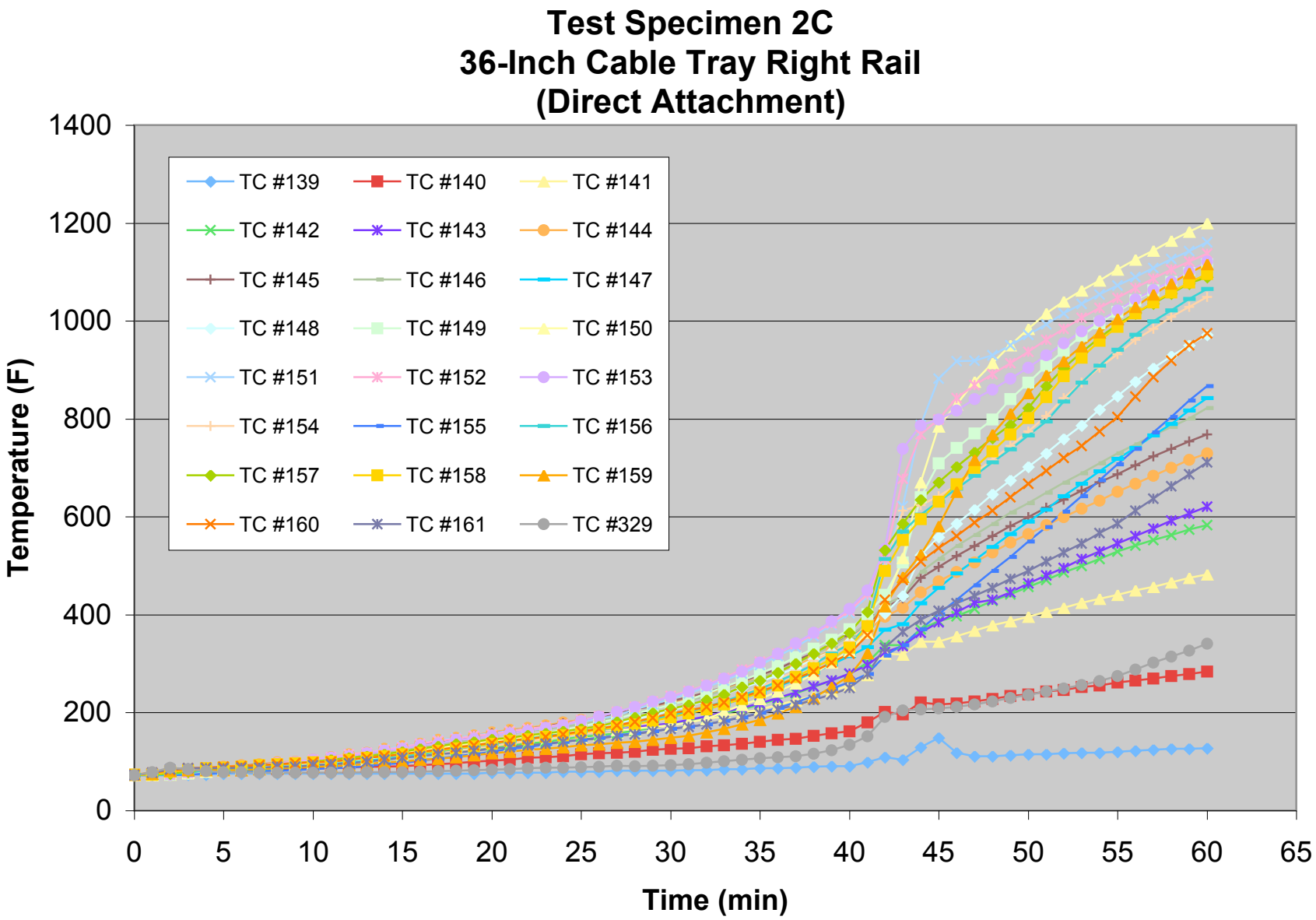
Test Specimen 2C
36-Inch Cable Tray Right Rail
(Direct Attachment)
Temperature (F)
Time (min)
0
200
400
600
800
1000
1200
1400
0
5
10
15
20
25
30
35
40
45
50
55
60
65
TC #139
TC #140
TC #141
TC #142
TC #143
TC #144
TC #145
TC #146
TC #147
TC #148
TC #149
TC #150
TC #151
TC #152
TC #153
TC #154
TC #155
TC #156
TC #157
TC #158
TC #159
TC #160
TC #161
TC #329

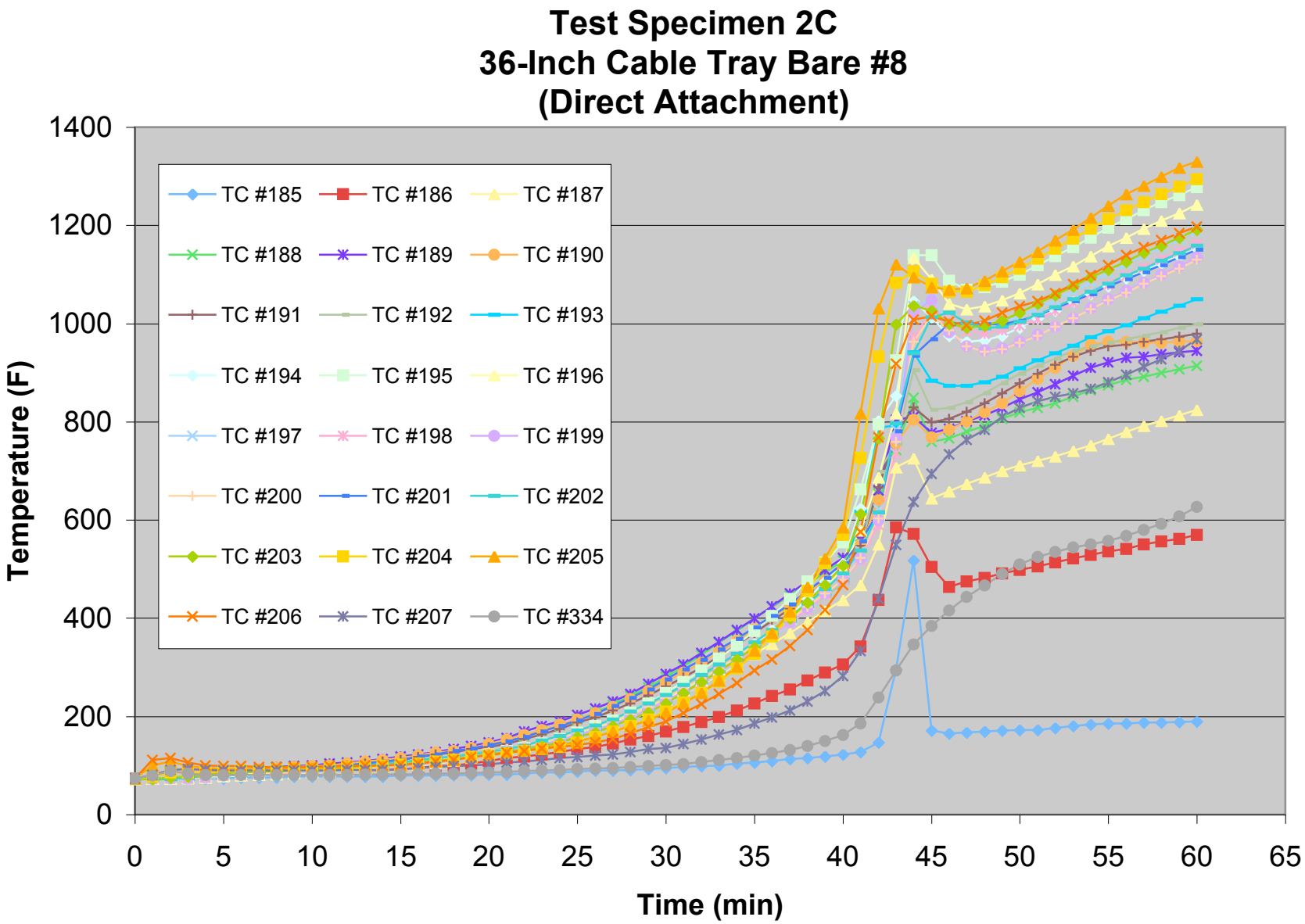
Test Specimen 2C
36-Inch Cable Tray Bare #8
(Direct Attachment)
Temperature (F)
Time (min)
0
200
400
600
800
1000
1200
1400
0
5
10
15
20
25
30
35
40
45
50
55
60
65
TC #185
TC #186
TC #187
TC #188
TC #189
TC #190
TC #191
TC #192
TC #193
TC #194
TC #195
TC #196
TC #197
TC #198
TC #199
TC #200
TC #201
TC #202
TC #203
TC #204
TC #205
TC #206
TC #207
TC #334

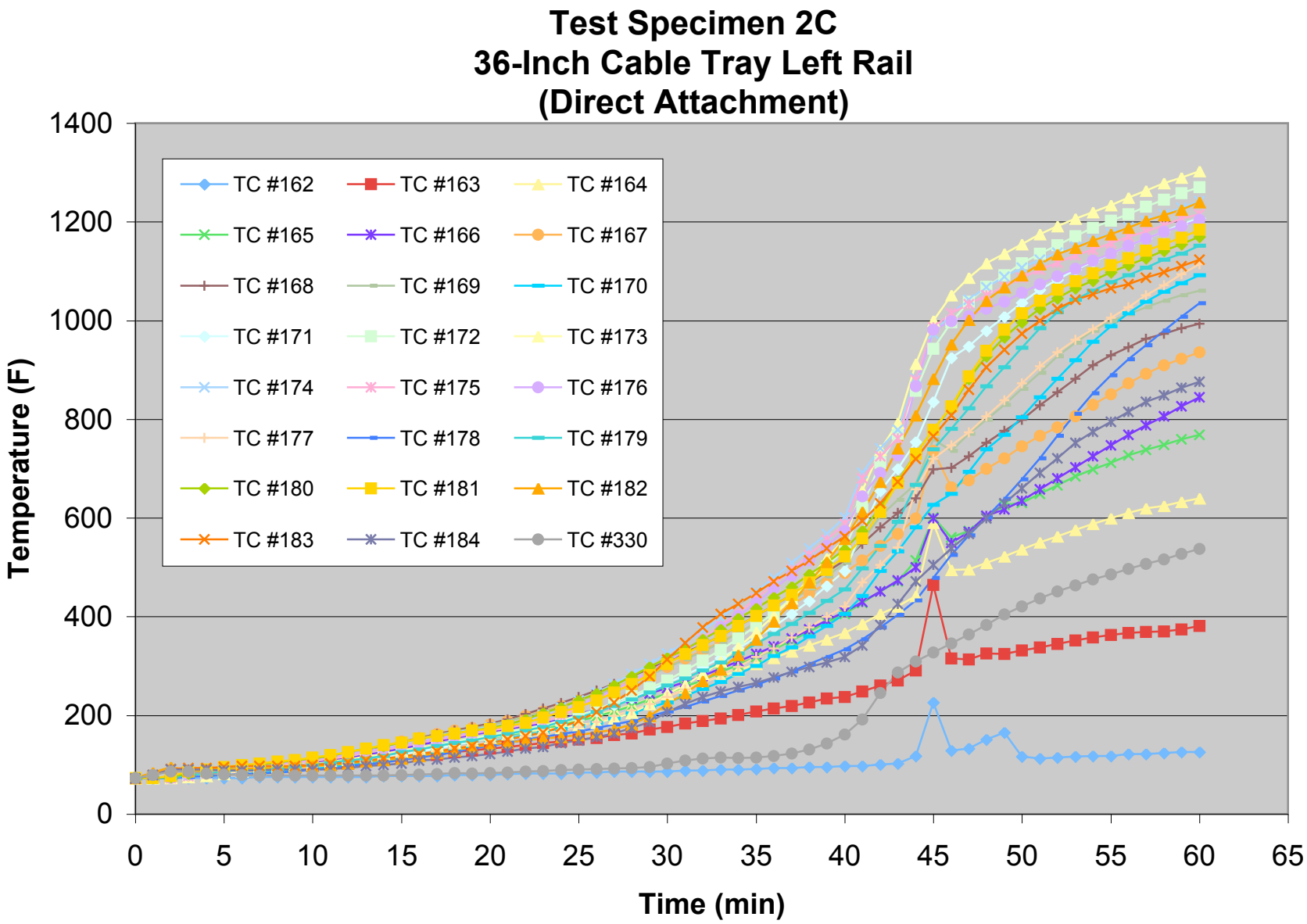
Test Specimen 2C
36-Inch Cable Tray Left Rail
(Direct Attachment)
Temperature (F)
Time (min)
0
200
400
600
800
1000
1200
1400
0
5
10
15
20
25
30
35
40
45
50
55
60
65
TC #162
TC #163
TC #164
TC #165
TC #166
TC #167
TC #168
TC #169
TC #170
TC #171
TC #172
TC #173
TC #174
TC #175
TC #176
TC #177
TC #178
TC #179
TC #180
TC #181
TC #182
TC #183
TC #184
TC #330

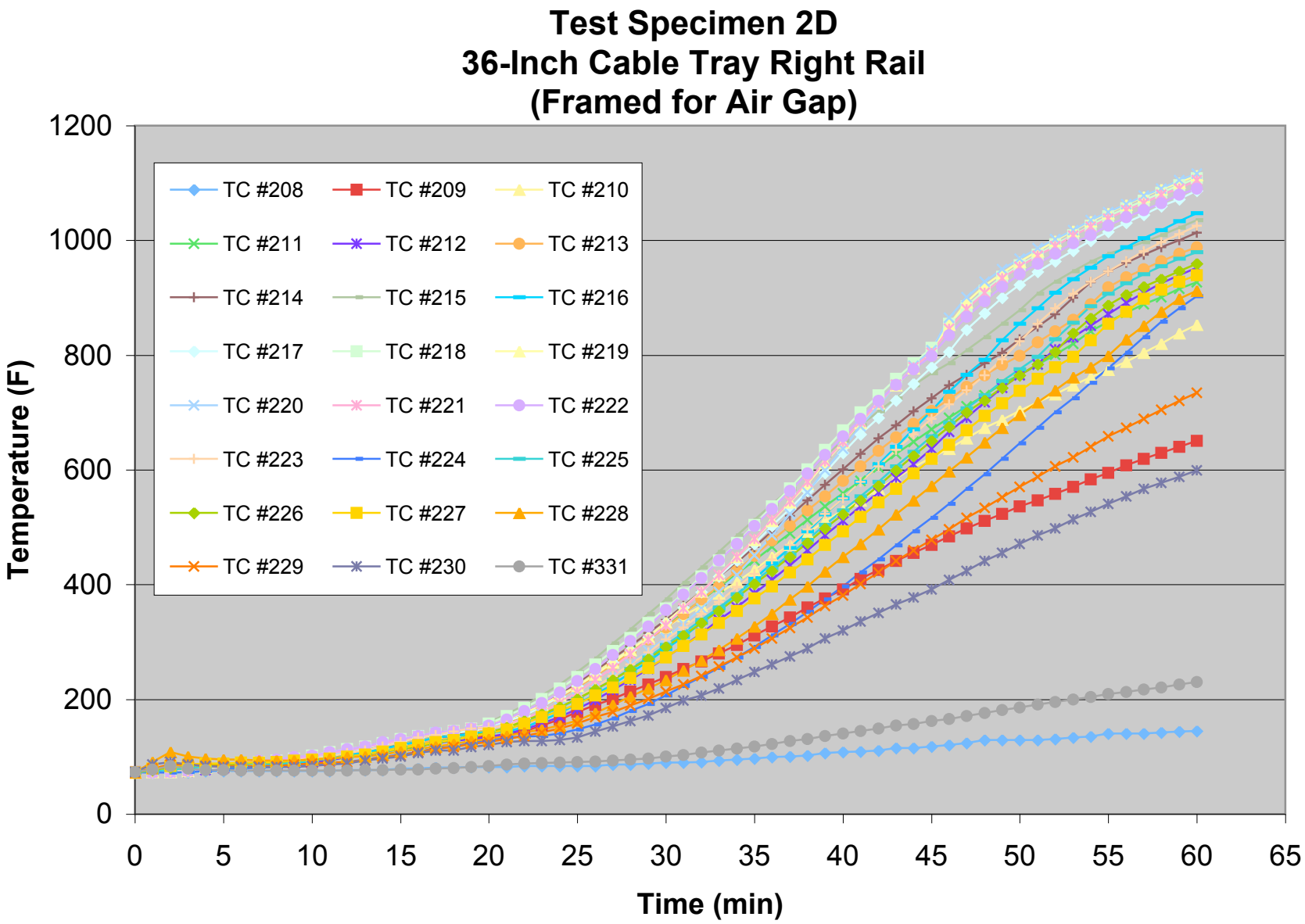
Test Specimen 2D
36-Inch Cable Tray Right Rail
(Framed for Air Gap)
Temperature (F)
Time (min)
0
200
400
600
800
1000
1200
0
5
10
15
20
25
30
35
40
45
50
55
60
65
TC #208
TC #209
TC #210
TC #211
TC #212
TC #213
TC #214
TC #215
TC #216
TC #217
TC #218
TC #219
TC #220
TC #221
TC #222
TC #223
TC #224
TC #225
TC #226
TC #227
TC #228
TC #229
TC #230
TC #331

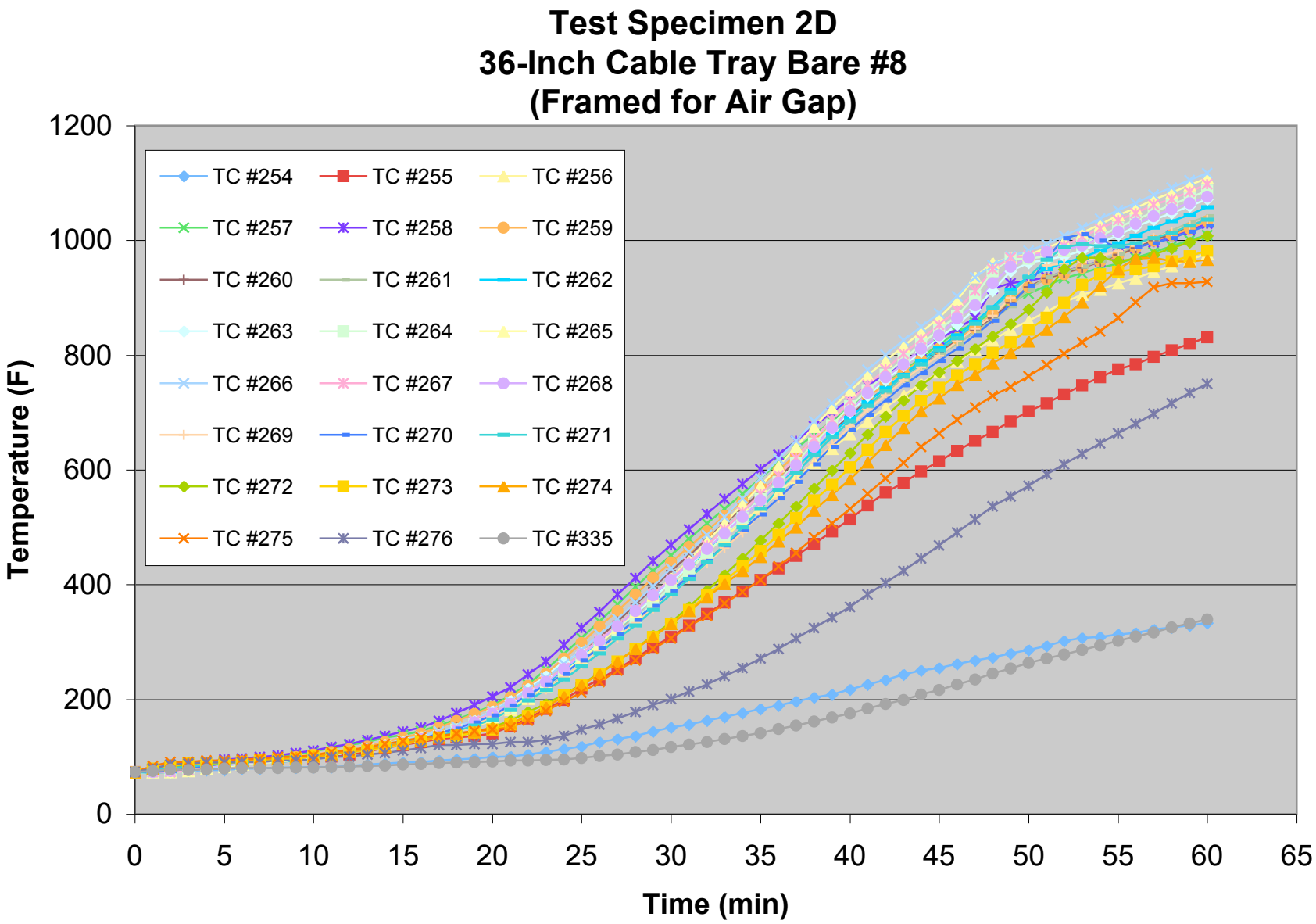
Test Specimen 2D
36-Inch Cable Tray Bare #8
(Framed for Air Gap)
Temperature (F)
Time (min)
0
200
400
600
800
1000
1200
0
5
10
15
20
25
30
35
40
45
50
55
60
65
TC #254
TC #255
TC #256
TC #257
TC #258
TC #259
TC #260
TC #261
TC #262
TC #263
TC #264
TC #265
TC #266
TC #267
TC #268
TC #269
TC #270
TC #271
TC #272
TC #273
TC #274
TC #275
TC #276
TC #335

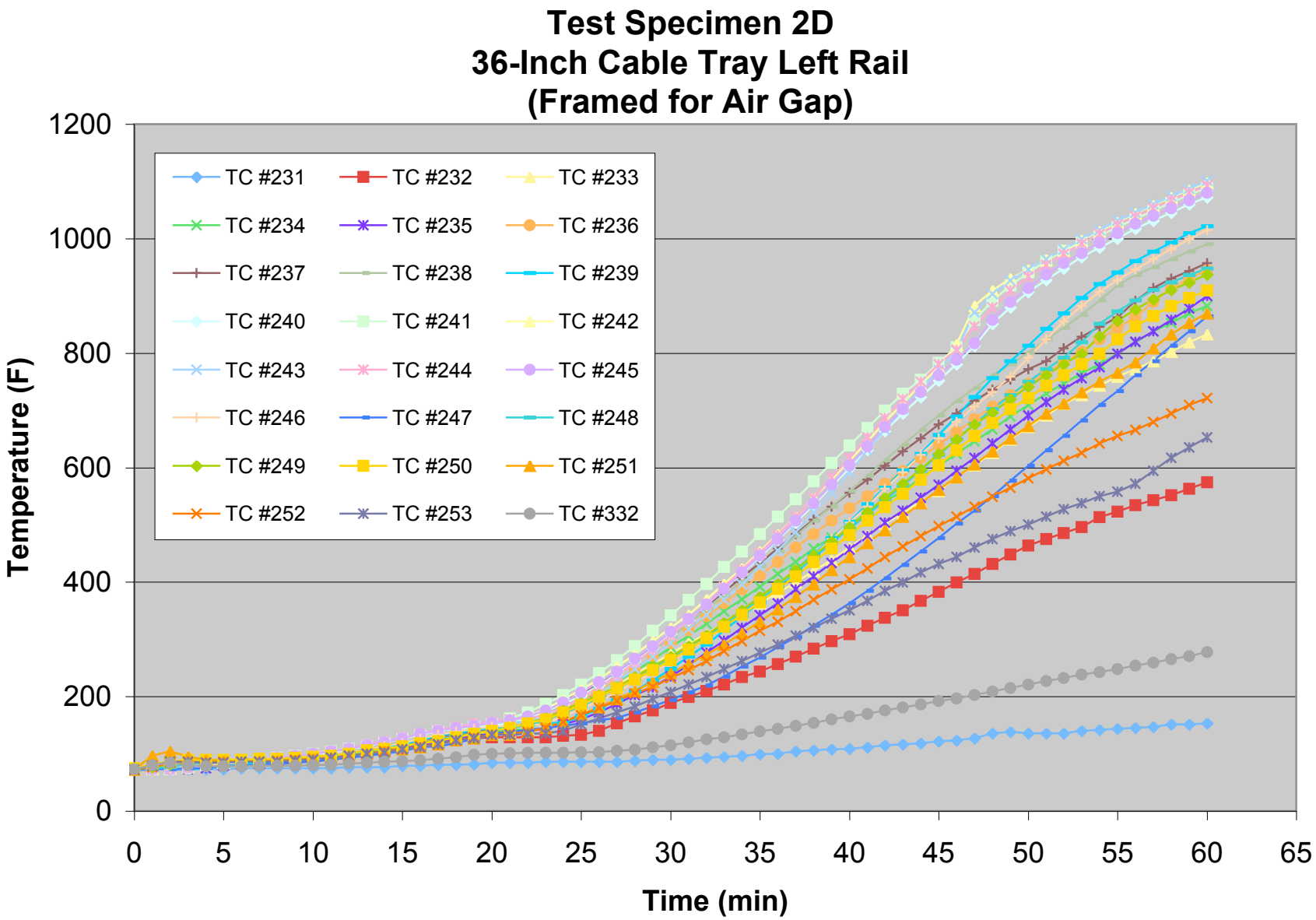
Test Specimen 2D
36-Inch Cable Tray Left Rail
(Framed for Air Gap)
Temperature (F)
Time (min)
0
200
400
600
800
1000
1200
0
5
10
15
20
25
30
35
40
45
50
55
60
65
TC #231
TC #232
TC #233
TC #234
TC #235
TC #236
TC #237
TC #238
TC #239
TC #240
TC #241
TC #242
TC #243
TC #244
TC #245
TC #246
TC #247
TC #248
TC #249
TC #250
TC #251
TC #252
TC #253
TC #332

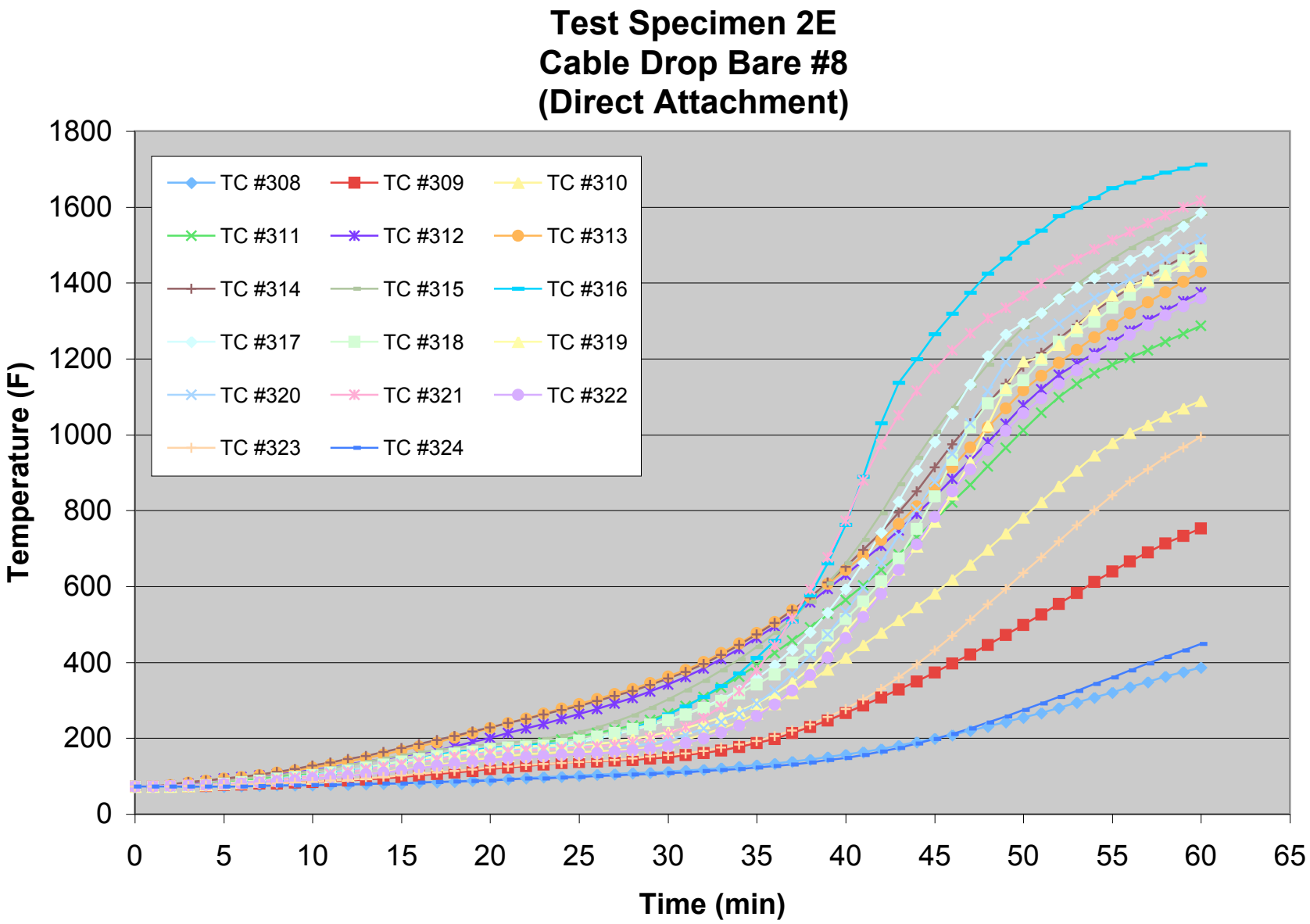
Test Specimen 2E
Cable Drop Bare #8
(Direct Attachment)
Temperature (F)
Time (min)
TC #308
TC #309
TC #310
TC #311
TC #312
TC #313
TC #314
TC #315
TC #316
TC #317
TC #318
TC #319
TC #320
TC #321
TC #322
TC #323
TC #324
0
200
400
600
800
1000
1200
1400
1600
1800
0
5
10
15
20
25
30
35
40
45
50
55
60
65

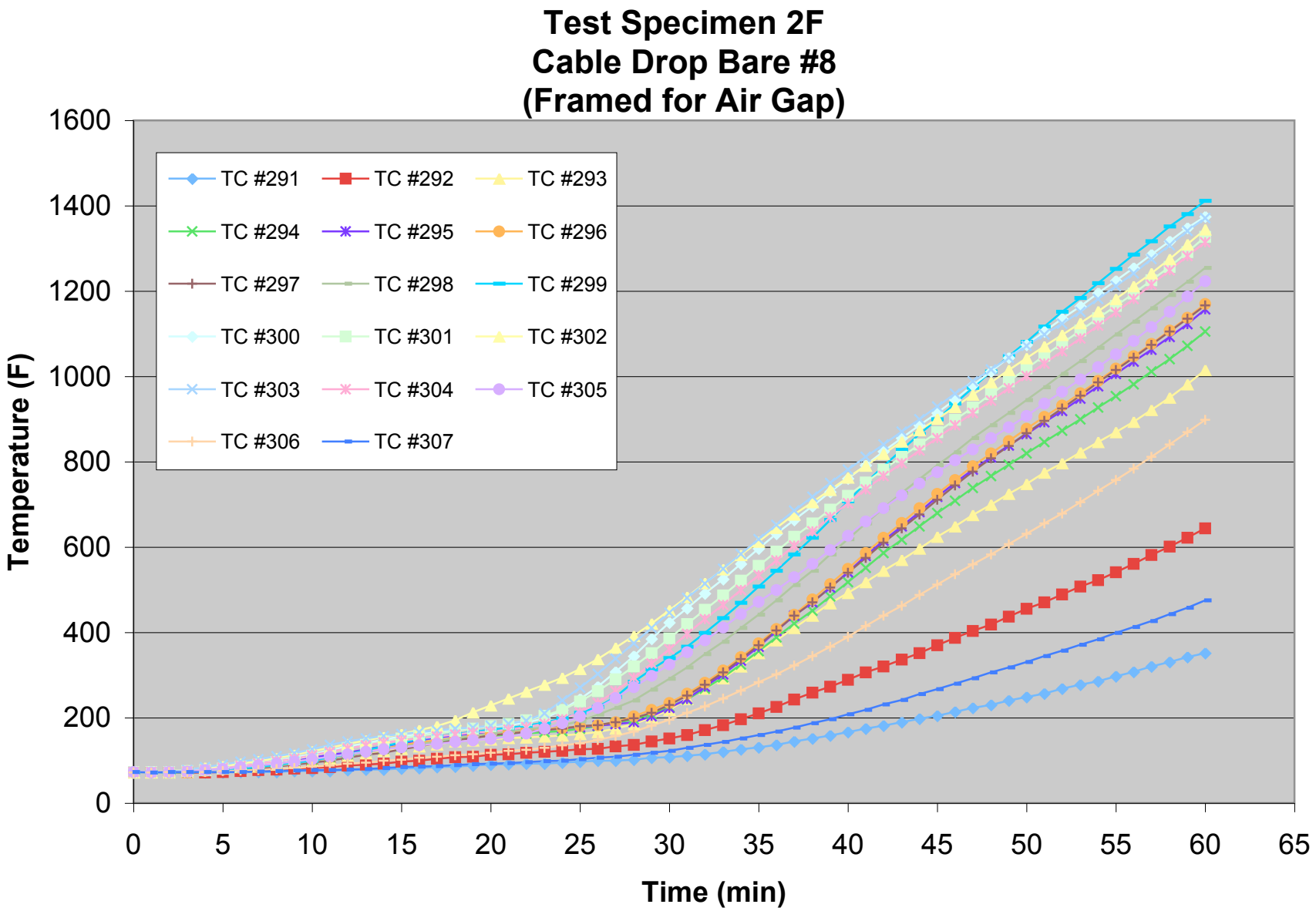
Test Specimen 2F
Cable Drop Bare #8
(Framed for Air Gap)
Temperature (F)
Time (min)
TC #291
TC #292
TC #293
TC #294
TC #295
TC #296
TC #297
TC #298
TC #299
TC #300
TC #301
TC #302
TC #303
TC #304
TC #305
TC #306
TC #307
0
200
400
600
800
1000
1200
1400
1600
0
5
10
15
20
25
30
35
40
45
50
55
60
65

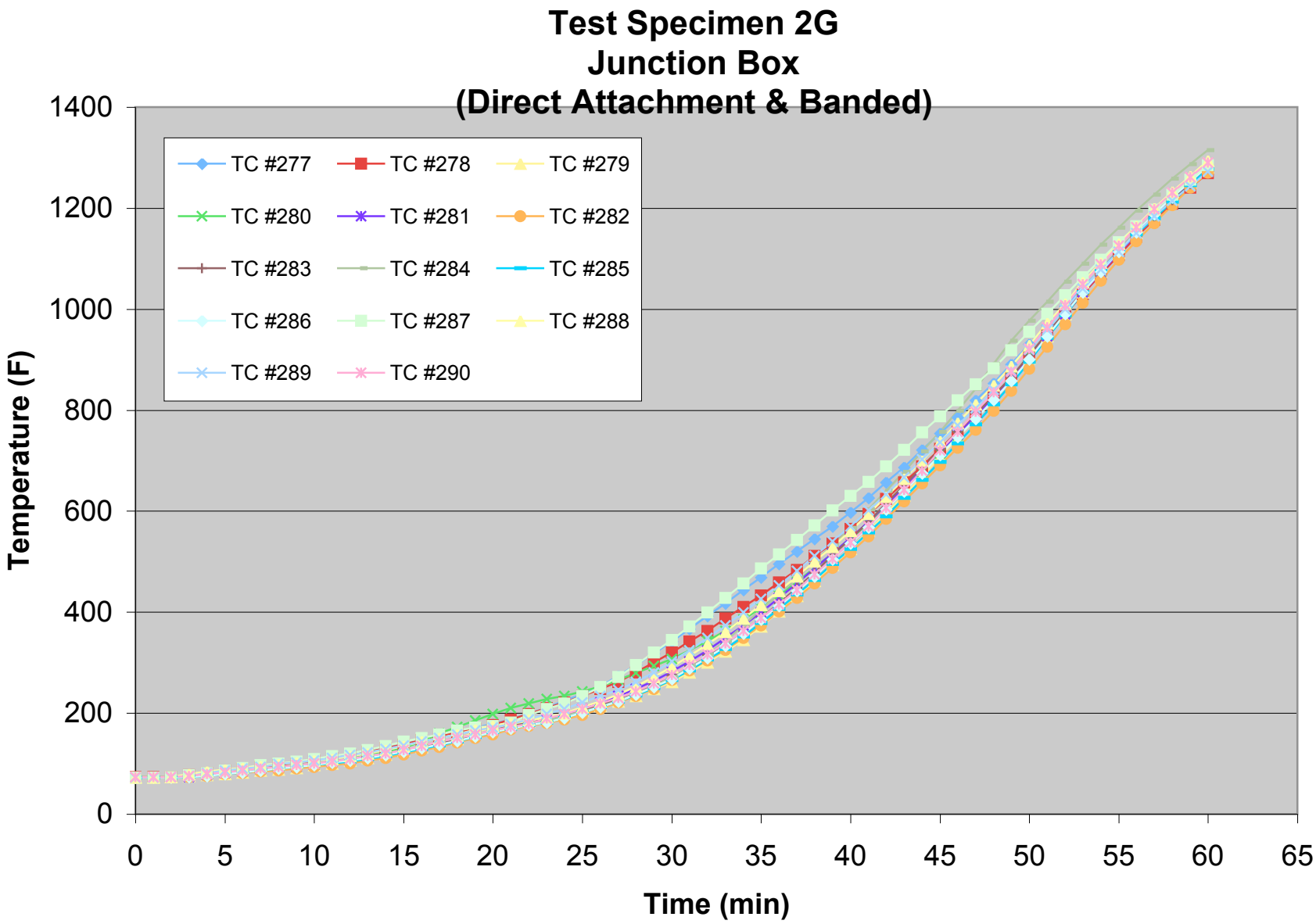
Test Specimen 2G
Junction Box
(Direct Attachment & Banded)
TC #277
TC #278
TC #279
TC #280
TC #281
TC #282
TC #283
TC #284
TC #285
TC #286
TC #287
TC #288
TC #289
TC #290
Temperature (F)
0
200
400
600
800
1000
1200
1400
0
5
10
15
20
25
30
35
40
45
50
55
60
65
Time (min)

Time (min)	Item 2A 12" Tray Right Rail Min (°F)	Item 2A 12" Tray Right Rail Avg (°F)	Item 2A 12" Tray Right Rail Max (°F)	Item 2A 12" Tray Bare #8 Min (°F)	Item 2A 12" Tray Bare #8 Avg (°F)	Item 2A 12" Tray Bare #8 Max (°F)	Item 2A 12" Tray Left Rail Min (°F)	Item 2A 12" Tray Left Rail Avg (°F)	Item 2A 12" Tray Left Rail Max (°F)
0	72	72	73	72	72	73	72	72	73
1	72	72	73	72	73	77	72	73	77
2	72	73	73	72	73	75	72	75	86
3	72	75	79	73	76	82	72	79	99
4	73	78	86	73	81	90	73	84	106
5	73	81	91	75	84	93	73	88	111
6	73	84	95	75	87	97	73	91	118
7	73	87	99	75	89	99	73	94	122
8	74	90	100	77	91	100	74	97	127
9	74	92	104	77	93	102	74	100	135
10	74	96	109	77	95	106	74	104	142
11	75	99	113	79	97	109	75	108	149
12	75	102	118	79	100	115	75	113	165
13	75	106	126	79	102	118	75	119	190
14	75	110	133	79	106	124	75	126	219
15	76	114	142	81	109	133	75	134	252
16	76	119	149	81	113	140	76	143	288
17	76	125	158	82	118	149	76	155	331
18	76	130	167	82	123	160	76	167	383
19	77	135	176	84	129	171	77	179	430
20	78	140	183	84	136	183	77	192	473
21	78	146	194	86	144	196	78	206	514
22	79	152	201	88	153	210	78	221	556
23	79	157	212	90	163	226	79	238	597
24	80	163	221	91	174	243	80	257	644
25	81	169	230	93	186	259	80	275	684
26	81	177	239	95	199	275	81	296	721
27	82	185	250	97	212	293	83	316	752
28	83	194	264	99	228	309	84	338	793
29	84	203	282	100	245	327	86	361	838
30	86	214	302	102	263	345	88	388	883
31	86	225	324	104	283	369	88	414	928
32	86	238	347	106	304	401	90	439	975
33	88	256	374	108	337	558	98	511	1083
34	88	275	405	109	378	721	108	590	1150
35	90	295	433	113	416	826	109	599	1186
36	90	315	462	115	447	900	93	593	1191
37	90	336	496	118	475	901	113	658	1191
38	91	357	536	122	507	925	108	648	1200
39	91	378	585	122	537	934	93	662	1215
40	93	399	635	124	561	932	93	680	1225
41	95	420	685	126	584	936	93	696	1236
42	95	441	730	127	604	943	95	711	1245
43	97	461	774	129	623	954	97	728	1251
44	97	482	815	133	642	979	97	742	1252
45	99	503	869	136	661	997	99	757	1254
46	100	523	914	151	681	1004	100	771	1256
47	104	544	955	153	699	1004	100	786	1261
48	102	564	991	160	715	1008	102	801	1269

Time (min)	Item 2A 12" Tray Right Rail Min (°F)	Item 2A 12" Tray Right Rail Avg (°F)	Item 2A 12" Tray Right Rail Max (°F)	Item 2A 12" Tray Bare #8 Min (°F)	Item 2A 12" Tray Bare #8 Avg (°F)	Item 2A 12" Tray Bare #8 Max (°F)	Item 2A 12" Tray Left Rail Min (°F)	Item 2A 12" Tray Left Rail Avg (°F)	Item 2A 12" Tray Left Rail Max (°F)
49	104	583	1024	156	729	1018	102	816	1278
50	106	601	1054	147	741	1036	104	831	1285
51	106	619	1080	158	756	1058	104	845	1292
52	108	636	1107	167	769	1078	106	858	1299
53	109	653	1130	178	782	1099	108	871	1305
54	108	670	1155	185	795	1123	108	884	1314
55	109	686	1177	167	805	1148	108	897	1330
56	111	702	1198	158	818	1173	111	910	1346
57	111	717	1218	162	831	1198	111	923	1362
58	113	731	1238	176	844	1220	113	935	1375
59	115	744	1256	189	858	1242	113	947	1389
60	117	758	1274	172	869	1260	115	958	1404
Max Temp:	117	758	1274	189	869	1260	115	958	1404
Max Allowed:	397	322	398	397	322	398	397	322	398

Time (min)	Item 2B 12" Tray Right Rail Min (°F)	Item 2B 12" Tray Right Rail Avg (°F)	Item 2B 12" Tray Right Rail Max (°F)	Item 2B 12" Tray Bare #8 Min (°F)	Item 2B 12" Tray Bare #8 Avg (°F)	Item 2B 12" Tray Bare #8 Max (°F)	Item 2B 12" Tray Left Rail Min (°F)	Item 2B 12" Tray Left Rail Avg (°F)	Item 2B 12" Tray Left Rail Max (°F)
0	72	72	73	72	72	73	72	72	73
1	72	74	79	73	74	77	72	74	81
2	72	75	82	73	75	82	72	76	86
3	73	76	82	73	77	84	73	76	84
4	73	78	82	75	81	84	73	78	82
5	75	80	82	75	82	86	73	80	82
6	76	81	84	77	84	88	73	81	84
7	76	83	86	77	85	90	73	82	86
8	76	84	88	79	87	91	73	84	90
9	77	86	91	79	89	95	75	86	91
10	77	88	93	81	91	97	75	88	95
11	77	91	99	82	95	100	75	90	99
12	78	94	102	82	98	104	75	93	102
13	79	98	108	84	102	108	75	97	108
14	80	101	113	86	106	113	75	100	111
15	81	105	118	88	110	118	75	104	117
16	82	110	124	89	114	124	75	108	122
17	83	114	129	91	119	127	75	112	126
18	85	118	135	92	124	133	75	116	131
19	86	122	140	93	130	140	75	119	136
20	87	127	145	95	136	151	75	124	140
21	89	131	149	96	144	163	75	128	149
22	89	136	158	98	153	176	75	133	160
23	90	143	171	100	163	192	75	139	172
24	91	150	183	100	174	208	75	146	185
25	92	158	199	102	187	226	75	154	201
26	93	168	216	106	200	244	75	163	217
27	94	179	234	109	214	264	75	173	235
28	95	191	253	113	230	286	75	184	255
29	97	204	275	118	245	306	77	195	275
30	99	217	295	124	262	327	77	207	295
31	102	232	316	127	279	349	77	220	316
32	105	247	338	133	296	370	77	233	338
33	110	262	361	138	314	392	77	247	360
34	113	278	385	144	331	414	77	262	383
35	116	294	408	149	350	437	77	277	406
36	119	312	432	154	368	460	77	292	430
37	122	329	457	162	387	484	77	307	453
38	126	347	480	169	407	509	79	324	477
39	129	364	505	176	428	545	79	340	502
40	132	382	529	183	449	579	79	357	527
41	136	400	554	192	470	610	79	374	552
42	139	418	579	199	491	640	79	391	579
43	142	437	606	206	512	669	81	409	606
44	146	455	635	213	532	694	79	427	633
45	149	474	660	219	552	720	79	445	660
46	152	493	687	225	572	741	79	462	685
47	155	513	712	232	592	765	79	480	711
48	158	533	738	238	611	786	81	498	734

Time (min)	Item 2B 12" Tray Right Rail Min (°F)	Item 2B 12" Tray Right Rail Avg (°F)	Item 2B 12" Tray Right Rail Max (°F)	Item 2B 12" Tray Bare #8 Min (°F)	Item 2B 12" Tray Bare #8 Avg (°F)	Item 2B 12" Tray Bare #8 Max (°F)	Item 2B 12" Tray Left Rail Min (°F)	Item 2B 12" Tray Left Rail Avg (°F)	Item 2B 12" Tray Left Rail Max (°F)
49	162	551	761	245	630	808	81	516	757
50	166	568	784	253	648	828	81	533	779
51	169	586	806	259	665	849	81	550	799
52	173	603	840	266	681	871	81	568	828
53	176	622	871	274	699	901	81	586	860
54	180	640	896	282	716	936	81	604	885
55	184	658	918	290	734	961	82	621	910
56	187	677	937	298	750	968	84	638	930
57	191	694	954	304	766	973	84	655	950
58	195	710	970	312	780	981	86	670	964
59	199	726	984	318	794	990	84	685	981
60	202	740	997	325	806	1002	84	700	995
Max Temp:	202	740	997	325	806	1002	86	700	995
Max Allowed:	397	322	398	397	322	398	397	322	398

Time (min)	Item 2C 36" Tray Right Rail Min (°F)	Item 2C 36" Tray Right Rail Avg (°F)	Item 2C 36" Tray Right Rail Max (°F)	Item 2C 36" Tray Bare #8 Min (°F)	Item 2C 36" Tray Bare #8 Avg (°F)	Item 2C 36" Tray Bare #8 Max (°F)	Item 2C 36" Tray Left Rail Min (°F)	Item 2C 36" Tray Left Rail Avg (°F)	Item 2C 36" Tray Left Rail Max (°F)
0	72	72	73	72	72	73	72	72	73
1	72	73	78	72	76	111	72	74	84
2	72	75	87	72	78	115	73	77	95
3	73	78	86	73	78	106	73	80	93
4	73	81	88	73	80	100	73	84	93
5	75	83	90	73	82	99	73	87	95
6	75	86	93	75	85	99	73	90	99
7	75	88	95	75	87	97	75	92	102
8	75	90	99	75	88	97	75	94	106
9	75	92	100	77	90	99	75	97	109
10	75	94	104	77	91	100	75	100	115
11	75	97	109	77	93	104	75	104	122
12	75	100	115	77	94	106	75	109	127
13	75	103	118	77	96	109	75	114	135
14	75	108	126	77	99	113	77	119	140
15	75	111	131	79	101	118	77	124	147
16	75	116	136	79	105	122	77	130	154
17	75	120	144	79	108	127	77	135	162
18	75	125	149	81	112	133	79	141	169
19	75	129	154	81	117	140	79	146	176
20	77	133	160	82	122	147	79	152	183
21	77	138	165	82	128	156	81	157	192
22	77	142	169	84	135	169	82	164	203
23	77	146	174	86	142	180	82	171	214
24	79	150	180	86	149	190	82	179	225
25	79	155	185	88	159	203	84	188	237
26	79	160	192	90	168	216	84	198	250
27	81	165	201	90	179	230	86	209	264
28	81	171	212	91	191	246	86	222	284
29	81	178	223	93	205	266	86	236	304
30	81	185	234	95	220	286	86	251	325
31	82	192	244	97	237	306	88	267	347
32	82	200	257	99	256	329	88	284	378
33	84	209	271	100	275	352	90	300	405
34	84	220	288	104	296	376	90	318	426
35	86	231	304	106	319	399	91	336	451
36	86	243	320	109	342	424	93	356	478
37	88	257	342	113	367	450	93	376	509
38	90	272	363	115	394	475	95	398	538
39	91	288	387	118	424	522	95	420	568
40	91	305	412	122	454	585	97	444	601
41	99	334	450	127	526	817	97	488	691
42	109	393	534	147	639	1031	100	531	741
43	104	443	739	293	766	1121	102	568	793
44	129	495	788	346	890	1139	118	626	912
45	149	528	882	171	865	1139	226	708	1000
46	118	551	918	165	855	1087	129	714	1051
47	111	574	919	167	855	1072	133	743	1087
48	111	596	930	169	862	1087	151	773	1116

Time (min)	Item 2C 36" Tray Right Rail Min (°F)	Item 2C 36" Tray Right Rail Avg (°F)	Item 2C 36" Tray Right Rail Max (°F)	Item 2C 36" Tray Bare #8 Min (°F)	Item 2C 36" Tray Bare #8 Avg (°F)	Item 2C 36" Tray Bare #8 Max (°F)	Item 2C 36" Tray Left Rail Min (°F)	Item 2C 36" Tray Left Rail Avg (°F)	Item 2C 36" Tray Left Rail Max (°F)
49	113	619	950	171	874	1107	165	798	1135
50	115	641	984	172	888	1126	117	820	1155
51	115	664	1015	172	903	1146	113	843	1175
52	117	687	1040	176	918	1170	115	864	1191
53	118	709	1062	180	934	1191	117	884	1206
54	118	730	1083	183	949	1216	118	902	1220
55	120	751	1105	185	964	1240	118	919	1234
56	122	772	1125	185	977	1263	122	934	1249
57	124	791	1144	187	990	1281	122	949	1263
58	126	810	1164	187	1001	1299	124	962	1278
59	126	828	1182	189	1014	1317	126	975	1290
60	127	845	1200	190	1027	1330	126	988	1303
Max Temp:	149	845	1200	346	1027	1330	226	988	1303
Max Allowed:	397	322	398	397	322	398	397	322	398

Time (min)	Item 2D 36" Tray Right Rail Min (°F)	Item 2D 36" Tray Right Rail Avg (°F)	Item 2D 36" Tray Right Rail Max (°F)	Item 2D 36" Tray Bare #8 Min (°F)	Item 2D 36" Tray Bare #8 Avg (°F)	Item 2D 36" Tray Bare #8 Max (°F)	Item 2D 36" Tray Left Rail Min (°F)	Item 2D 36" Tray Left Rail Avg (°F)	Item 2D 36" Tray Left Rail Max (°F)
0	72	72	73	72	73	73	72	73	75
1	72	75	91	72	75	84	72	75	97
2	72	78	108	73	78	91	73	77	104
3	73	78	100	75	81	91	73	79	95
4	75	81	97	77	84	93	73	81	90
5	75	83	95	77	87	95	73	83	90
6	75	85	95	79	90	97	75	85	90
7	75	87	93	79	91	99	75	87	91
8	75	88	95	80	93	102	75	88	93
9	75	90	99	81	96	106	75	90	97
10	75	94	102	81	99	111	75	93	100
11	75	97	108	82	103	117	75	96	106
12	76	101	113	83	107	122	77	100	109
13	77	105	118	84	112	129	77	104	117
14	77	110	126	85	117	136	77	109	122
15	78	115	131	86	123	144	79	114	129
16	78	120	136	87	128	151	79	120	135
17	79	125	142	89	135	162	81	125	142
18	80	129	145	90	142	176	81	130	147
19	82	134	149	91	151	190	82	134	153
20	82	139	160	92	161	205	84	138	156
21	82	146	174	93	174	221	84	141	162
22	84	155	189	93	190	243	84	146	172
23	84	166	207	94	207	266	86	154	187
24	84	178	226	95	227	295	86	164	203
25	84	192	248	98	247	324	86	176	221
26	84	208	271	101	269	352	86	189	241
27	86	224	297	104	291	383	86	205	264
28	86	242	322	108	314	412	88	221	288
29	88	260	349	112	338	441	90	238	315
30	90	279	374	117	362	469	90	257	342
31	90	299	403	121	386	496	91	275	369
32	91	320	430	126	411	523	93	295	397
33	93	341	457	131	436	549	95	315	426
34	95	363	486	136	461	576	97	336	453
35	97	386	513	141	487	601	99	358	484
36	99	409	540	148	513	626	100	380	514
37	100	433	568	154	539	651	104	403	545
38	102	457	601	161	566	685	106	426	576
39	106	482	635	168	592	716	108	449	608
40	108	506	669	175	618	745	109	473	639
41	109	531	700	184	643	774	111	497	669
42	111	555	730	192	667	801	115	521	700
43	115	578	759	199	690	826	117	544	729
44	115	601	786	208	712	849	118	567	754
45	118	623	813	216	733	873	122	591	783
46	120	649	865	226	755	903	124	614	815
47	124	673	901	235	777	936	127	642	882
48	129	695	928	245	801	961	136	666	909

Time (min)	Item 2D 36" Tray Right Rail Min (°F)	Item 2D 36" Tray Right Rail Avg (°F)	Item 2D 36" Tray Right Rail Max (°F)	Item 2D 36" Tray Bare #8 Min (°F)	Item 2D 36" Tray Bare #8 Avg (°F)	Item 2D 36" Tray Bare #8 Max (°F)	Item 2D 36" Tray Left Rail Min (°F)	Item 2D 36" Tray Left Rail Avg (°F)	Item 2D 36" Tray Left Rail Max (°F)
49	129	715	950	254	822	972	138	687	930
50	129	735	968	263	839	982	136	707	946
51	129	754	986	271	855	993	136	726	964
52	131	773	1002	278	870	1008	136	744	981
53	133	791	1018	286	883	1022	140	762	999
54	135	810	1035	294	893	1038	142	781	1015
55	140	827	1049	302	904	1053	144	798	1031
56	140	842	1063	310	915	1065	145	814	1045
57	140	857	1078	317	927	1080	147	831	1060
58	142	871	1090	325	937	1092	151	846	1074
59	144	884	1105	329	947	1105	151	861	1087
60	145	896	1116	333	957	1117	153	874	1101
Max Temp:	145	896	1116	333	957	1117	153	874	1101
Max Allowed:	397	322	398	397	323	398	397	323	400

Time (min)	Item 2E Air Drop Bare #8 Min (°F)	Item 2E Air Drop Bare #8 Average (°F)	Item 2E Air Drop Bare #8 Max (°F)	Item 2F Air Drop Bare #8 Min (°F)	Item 2F Air Drop Bare #8 Average (°F)	Item 2F Air Drop Bare #8 Max (°F)	Item 2G Junction Box Min (°F)	Item 2G Junction Box Avg (°F)	Item 2G Junction Box Max (°F)
0	72	73	73	72	72	73	72	72	73
1	72	73	74	72	72	73	72	72	73
2	72	74	78	72	73	75	72	73	73
3	73	76	84	72	74	78	73	75	79
4	73	78	89	72	76	84	75	78	84
5	73	81	94	72	79	90	79	83	88
6	73	85	98	73	83	97	81	86	91
7	74	88	104	73	86	103	84	90	97
8	75	92	111	73	91	110	86	93	100
9	75	96	119	75	96	117	90	96	104
10	76	100	128	75	101	126	93	101	109
11	77	105	136	75	106	136	97	105	115
12	78	111	145	77	113	144	100	110	120
13	79	116	153	79	119	151	106	116	127
14	80	122	163	79	124	157	111	122	135
15	81	129	174	81	130	162	118	130	144
16	83	135	185	82	135	171	126	138	151
17	84	142	195	84	140	180	133	146	160
18	86	148	206	86	146	194	142	154	172
19	87	154	217	88	150	213	151	163	185
20	89	160	228	90	155	229	158	170	198
21	91	166	240	91	159	245	167	178	210
22	93	171	252	93	164	261	174	186	219
23	94	175	265	93	171	277	180	195	228
24	96	180	278	95	179	294	187	204	234
25	98	186	290	97	190	314	196	215	243
26	100	192	303	99	202	337	208	227	253
27	102	200	316	100	218	364	221	240	273
28	104	208	330	102	236	392	234	255	295
29	106	218	345	106	257	421	248	272	320
30	108	229	362	108	278	452	262	291	345
31	110	243	380	111	302	483	280	312	372
32	113	258	401	115	327	516	300	334	399
33	116	277	424	120	353	549	322	357	428
34	119	298	450	126	380	584	345	383	457
35	122	322	477	131	408	619	372	409	486
36	126	350	507	136	437	652	401	437	514
37	131	382	538	144	465	685	428	465	543
38	136	417	592	151	494	718	457	494	572
39	142	458	676	158	522	750	487	524	601
40	148	502	773	167	552	782	518	555	630
41	156	551	889	174	581	812	550	587	658
42	165	603	1030	181	609	841	585	621	689
43	174	655	1137	190	637	870	619	655	721
44	186	705	1199	198	664	899	655	691	756
45	198	756	1264	205	691	929	691	727	788
46	209	808	1319	214	718	959	725	762	819
47	220	860	1374	223	745	988	761	799	851
48	231	910	1424	230	771	1016	799	836	892

Time (min)	Item 2E Air Drop Bare #8 Min (°F)	Item 2E Air Drop Bare #8 Average (°F)	Item 2E Air Drop Bare #8 Max (°F)	Item 2F Air Drop Bare #8 Min (°F)	Item 2F Air Drop Bare #8 Average (°F)	Item 2F Air Drop Bare #8 Max (°F)	Item 2G Junction Box Min (°F)	Item 2G Junction Box Avg (°F)	Item 2G Junction Box Max (°F)
49	243	956	1464	241	797	1047	838	875	937
50	255	995	1506	248	823	1081	882	917	977
51	267	1027	1537	257	848	1117	925	959	1015
52	280	1062	1576	268	874	1152	970	1001	1054
53	294	1094	1598	277	900	1184	1013	1042	1090
54	307	1124	1623	286	926	1218	1056	1081	1128
55	321	1153	1650	297	952	1252	1098	1119	1161
56	335	1178	1664	307	979	1285	1134	1154	1195
57	348	1202	1678	320	1007	1317	1170	1189	1227
58	362	1225	1691	331	1036	1351	1206	1221	1258
59	374	1248	1701	342	1065	1380	1240	1252	1287
60	387	1270	1712	352	1094	1411	1269	1282	1315
Max Temp:	387	1270	1712	352	1094	1411	1269	1282	1315
Max Allowed:	397	323	398	397	322	398	397	322	398

Time (min)	E119 Std Average (°F)	Furnace Average (°F)	Integration of Furnace Average (°F•min)	Integration of E119 Std Average (°F•min)	Error (%)	Furnace Probe #1 (°F)	Furnace Probe #2 (°F)	Furnace Probe #3 (°F)	Furnace Probe #4 (°F)	Furnace Probe #5 (°F)
0	68	73	0	0	0.00%	75	74	73	74	73
1	254	179	58	466	-87.5%	168	112	171	274	134
2	441	431	295	932	-68.4%	342	231	371	606	273
3	627	739	812	1,398	-41.9%	558	422	630	935	489
4	814	924	1,575	1,864	-15.5%	716	623	864	1076	706
5	1,000	1,020	2,478	2,330	6.37%	824	780	998	1131	863
6	1,060	1,077	3,459	3,412	1.36%	902	893	1069	1168	969
7	1,120	1,115	4,486	4,494	-0.17%	962	973	1113	1190	1040
8	1,180	1,149	5,550	5,576	-0.46%	1012	1034	1145	1219	1089
9	1,240	1,195	6,654	6,658	-0.06%	1067	1083	1214	1266	1140
10	1,300	1,245	7,806	7,740	0.85%	1124	1126	1279	1318	1191
11	1,328	1,286	9,004	9,022	-0.20%	1174	1167	1328	1354	1236
12	1,347	1,322	10,240	10,304	-0.62%	1218	1202	1362	1388	1273
13	1,364	1,359	11,512	11,586	-0.64%	1259	1238	1394	1428	1307
14	1,381	1,394	12,820	12,868	-0.37%	1296	1273	1427	1471	1339
15	1,396	1,421	14,159	14,150	0.07%	1325	1303	1451	1497	1363
16	1,410	1,438	15,521	15,514	0.05%	1343	1324	1465	1509	1381
17	1,424	1,452	16,898	16,878	0.12%	1356	1340	1474	1525	1395
18	1,436	1,466	18,290	18,242	0.26%	1372	1354	1487	1538	1409
19	1,448	1,473	19,691	19,606	0.43%	1384	1365	1493	1542	1419
20	1,459	1,479	21,099	20,970	0.62%	1395	1373	1499	1547	1427
21	1,470	1,487	22,515	22,386	0.57%	1405	1380	1504	1555	1435
22	1,480	1,495	23,938	23,802	0.57%	1417	1387	1515	1562	1446
23	1,490	1,504	25,369	25,218	0.60%	1428	1398	1521	1570	1456
24	1,499	1,513	26,810	26,634	0.66%	1440	1406	1532	1577	1465
25	1,508	1,522	28,259	28,050	0.75%	1451	1418	1539	1587	1475
26	1,517	1,526	29,715	29,512	0.69%	1457	1428	1541	1592	1481
27	1,525	1,531	31,176	30,974	0.65%	1464	1437	1544	1595	1486
28	1,533	1,536	32,641	32,436	0.63%	1470	1448	1547	1600	1493
29	1,541	1,543	34,112	33,898	0.63%	1476	1458	1552	1607	1499
30	1,549	1,548	35,590	35,360	0.65%	1483	1464	1557	1612	1505
31	1,556	1,555	37,074	36,875	0.54%	1490	1474	1565	1620	1514
32	1,563	1,562	38,565	38,390	0.46%	1498	1483	1572	1626	1522
33	1,570	1,569	40,063	39,905	0.40%	1505	1492	1577	1635	1528
34	1,576	1,577	41,568	41,420	0.36%	1513	1501	1583	1643	1535
35	1,583	1,585	43,081	42,935	0.34%	1522	1512	1592	1650	1545
36	1,589	1,595	44,603	44,450	0.34%	1533	1525	1601	1659	1556
37	1,595	1,604	46,135	45,965	0.37%	1545	1535	1611	1668	1566
38	1,601	1,609	47,673	47,480	0.41%	1550	1541	1615	1672	1572
39	1,606	1,615	49,217	48,995	0.45%	1559	1550	1625	1675	1581
40	1,612	1,616	50,764	50,510	0.50%	1558	1550	1623	1675	1581
41	1,617	1,622	52,315	52,111	0.39%	1560	1554	1627	1679	1582
42	1,623	1,629	53,872	53,712	0.30%	1565	1555	1632	1681	1587
43	1,628	1,626	55,432	55,314	0.21%	1565	1550	1632	1673	1585
44	1,633	1,623	56,988	56,915	0.13%	1564	1547	1631	1671	1583
45	1,638	1,622	58,542	58,516	0.05%	1562	1548	1631	1673	1583
46	1,643	1,626	60,098	60,117	-0.03%	1567	1551	1634	1678	1587
47	1,648	1,636	61,661	61,718	-0.09%	1576	1563	1643	1696	1598
48	1,652	1,646	63,234	63,320	-0.13%	1587	1574	1654	1704	1610
49	1,657	1,653	64,816	64,921	-0.16%	1599	1589	1664	1708	1620

Time (min)	E119 Std Average (°F)	Furnace Average (°F)	Integration of Furnace Average (°F•min)	Integration of E119 Std Average (°F•min)	Error (%)	Furnace Probe #1 (°F)	Furnace Probe #2 (°F)	Furnace Probe #3 (°F)	Furnace Probe #4 (°F)	Furnace Probe #5 (°F)
50	1,661	1,659	66,404	66,522	-0.18%	1607	1597	1670	1712	1627
51	1,666	1,664	67,997	68,123	-0.18%	1610	1600	1675	1716	1631
52	1,670	1,669	69,596	69,724	-0.18%	1624	1608	1679	1722	1638
53	1,674	1,673	71,199	71,326	-0.18%	1632	1617	1683	1723	1645
54	1,678	1,678	72,807	72,927	-0.16%	1638	1623	1686	1727	1651
55	1,682	1,683	74,419	74,528	-0.15%	1643	1628	1690	1732	1655
56	1,686	1,687	76,036	76,129	-0.12%	1645	1633	1697	1736	1662
57	1,690	1,692	77,658	77,730	-0.09%	1650	1639	1701	1741	1668
58	1,694	1,697	79,284	79,332	-0.06%	1656	1644	1706	1748	1674
59	1,698	1,701	80,915	80,933	-0.02%	1661	1648	1710	1751	1678
60	1,701	1,706	82,550	82,534	0.02%	1667	1654	1715	1757	1684

Time (min)	Furnace Probe #6 (°F)	Furnace Probe #7 (°F)	Furnace Probe #8 (°F)	Furnace Probe #9 (°F)	Furnace Probe #10 (°F)	Furnace Probe #11 (°F)	Furnace Probe #12 (°F)	Furnace Probe TC #13 (°F)	Furnace Probe TC #14 (°F)	Furnace Probe TC #40 (°F)
0	73	73	73	73	74	73	73	73	73	72
1	151	302	154	143	137	211	240	161	144	72
2	372	694	551	372	399	435	631	415	343	72
3	687	966	974	700	765	749	1041	769	654	72
4	925	1088	1077	887	951	952	1145	1014	906	72
5	1038	1144	1105	976	1031	1054	1177	1120	1033	72
6	1098	1178	1116	1028	1073	1117	1195	1167	1102	72
7	1137	1198	1129	1066	1101	1155	1207	1194	1143	72
8	1168	1218	1148	1094	1129	1194	1235	1226	1175	72
9	1211	1257	1178	1133	1166	1253	1275	1263	1225	72
10	1260	1299	1216	1179	1210	1315	1321	1306	1281	72
11	1303	1337	1252	1220	1251	1352	1363	1345	1326	72
12	1339	1365	1284	1256	1288	1389	1399	1380	1361	72
13	1374	1398	1317	1293	1325	1433	1440	1419	1397	72
14	1404	1434	1346	1325	1355	1470	1483	1456	1434	72
15	1433	1462	1368	1352	1379	1501	1511	1484	1464	72
16	1453	1477	1387	1371	1398	1516	1530	1502	1481	72
17	1469	1492	1404	1389	1415	1521	1547	1515	1490	72
18	1482	1503	1421	1405	1431	1533	1558	1527	1504	72
19	1489	1508	1433	1418	1440	1535	1560	1531	1508	72
20	1494	1514	1442	1428	1448	1536	1563	1536	1510	72
21	1499	1519	1451	1437	1455	1545	1570	1542	1518	72
22	1506	1525	1461	1447	1463	1555	1576	1548	1527	72
23	1516	1534	1471	1457	1472	1559	1583	1556	1533	72
24	1525	1542	1481	1468	1481	1567	1593	1566	1543	72
25	1534	1551	1490	1478	1491	1573	1597	1573	1548	72
26	1539	1555	1498	1485	1498	1567	1603	1576	1545	72
27	1543	1559	1505	1491	1502	1572	1602	1579	1549	72
28	1548	1566	1512	1498	1507	1577	1605	1583	1553	72
29	1555	1573	1519	1505	1514	1581	1612	1588	1559	72
30	1561	1579	1527	1511	1520	1587	1613	1593	1566	72
31	1567	1584	1533	1518	1526	1594	1620	1599	1572	72
32	1574	1592	1541	1526	1533	1599	1625	1604	1577	72
33	1582	1599	1548	1533	1541	1605	1632	1611	1583	72
34	1590	1607	1557	1541	1549	1612	1641	1619	1590	72
35	1598	1617	1567	1549	1556	1618	1649	1625	1596	72
36	1608	1628	1576	1558	1565	1622	1660	1632	1603	73
37	1618	1640	1586	1569	1574	1629	1670	1639	1610	72
38	1622	1641	1590	1574	1580	1635	1671	1645	1615	73
39	1627	1649	1598	1581	1586	1634	1673	1649	1619	73
40	1628	1650	1600	1583	1589	1639	1671	1652	1621	73
41	1631	1652	1605	1588	1597	1645	1689	1665	1627	72
42	1638	1656	1614	1597	1608	1653	1706	1678	1634	73
43	1635	1652	1614	1596	1608	1651	1696	1674	1633	72
44	1632	1647	1612	1593	1605	1648	1692	1666	1630	73
45	1632	1651	1610	1594	1603	1647	1685	1661	1628	73
46	1635	1660	1615	1599	1606	1650	1683	1663	1632	72
47	1647	1669	1622	1607	1614	1659	1700	1675	1640	72
48	1656	1680	1633	1614	1621	1668	1707	1682	1650	72
49	1664	1689	1642	1623	1628	1669	1707	1686	1655	73

Time (min)	Furnace Probe #6 (°F)	Furnace Probe #7 (°F)	Furnace Probe #8 (°F)	Furnace Probe #9 (°F)	Furnace Probe #10 (°F)	Furnace Probe #11 (°F)	Furnace Probe #12 (°F)	Furnace Probe TC #13 (°F)	Furnace Probe TC #14 (°F)	Furnace Probe TC #40 (°F)
50	1669	1694	1647	1632	1634	1674	1712	1690	1661	72
51	1673	1697	TC Failed	1634	1637	1682	1714	1694	1666	72
52	1678	1701	TC Failed	1645	1646	1680	1713	1698	1669	73
53	1682	1706	TC Failed	1652	1650	1681	1713	1700	1671	73
54	1686	1710	TC Failed	1658	1655	1683	1719	1705	1676	72
55	1690	1711	TC Failed	1664	1661	1690	1720	1709	1682	73
56	1694	1718	TC Failed	1668	1664	1696	1726	1712	1685	73
57	1697	1721	TC Failed	1671	1668	1699	1733	1717	1689	72
58	1700	1726	TC Failed	1672	1673	1702	1741	1721	1693	73
59	1705	1730	TC Failed	1679	1678	1706	1740	1724	1698	73
60	1708	1734	TC Failed	1682	1682	1710	1748	1730	1701	73

Time (min)	TC #1 (°F)	TC #2 (°F)	TC #3 (°F)	TC #4 (°F)	TC #5 (°F)	TC #6 (°F)	TC #7 (°F)	TC #8 (°F)	TC #9 (°F)	TC #10 (°F)	TC #11 (°F)	TC #12 (°F)	TC #13 (°F)
0	72	72	72	72	72	72	72	72	72	72	72	72	72
1	72	72	72	72	72	72	72	72	72	72	72	73	73
2	72	72	73	73	72	73	73	73	72	73	73	73	73
3	72	73	75	75	73	77	77	75	73	77	79	75	75
4	73	77	81	79	75	81	81	81	77	81	86	77	79
5	73	79	84	81	79	84	84	84	79	84	91	81	82
6	75	81	86	84	81	88	88	88	82	88	95	84	86
7	75	82	90	88	82	91	91	91	84	90	99	88	90
8	75	84	91	90	86	93	95	95	88	93	100	91	93
9	77	84	93	93	88	97	99	99	90	95	104	95	97
10	77	86	95	95	90	100	102	104	93	99	109	99	100
11	77	86	97	99	93	104	108	108	95	102	113	102	102
12	77	88	100	102	97	109	111	111	99	106	118	106	104
13	77	88	102	106	100	115	117	117	102	111	126	111	109
14	77	90	104	109	104	118	122	122	106	115	133	115	113
15	77	90	108	113	109	124	127	127	111	120	138	120	118
16	77	91	111	118	115	129	133	133	115	127	145	127	126
17	79	93	115	122	120	136	138	140	120	133	153	133	133
18	79	95	118	126	126	142	145	145	126	140	158	140	140
19	79	97	122	131	131	149	153	153	133	147	165	145	147
20	79	99	127	135	136	156	158	160	138	154	171	153	154
21	81	102	131	140	142	162	165	165	145	160	178	160	162
22	81	104	136	144	147	169	172	172	153	167	190	165	169
23	82	108	142	149	153	176	180	180	160	174	201	169	174
24	82	109	147	154	158	181	187	185	165	183	212	174	180
25	82	111	154	160	163	189	196	194	172	192	223	178	185
26	84	115	160	167	169	196	205	207	178	201	235	185	194
27	84	117	167	174	174	205	214	216	185	212	250	196	212
28	84	118	176	181	178	214	223	226	192	221	264	208	226
29	84	122	183	190	183	223	232	239	203	234	280	223	243
30	86	126	192	199	190	234	243	252	214	246	298	241	261
31	86	129	203	208	199	244	253	264	225	261	316	261	282
32	86	133	214	219	208	255	264	277	237	277	336	282	304
33	88	136	226	232	219	268	277	293	252	295	358	309	331
34	88	140	239	246	230	280	288	309	266	311	379	342	363
35	90	144	252	261	241	295	302	327	282	329	401	378	397
36	90	149	266	277	253	311	316	345	298	349	424	421	437
37	90	154	280	291	266	327	331	367	316	369	450	480	486
38	91	158	291	306	279	345	347	387	334	388	475	536	532
39	91	163	304	322	293	363	365	406	352	408	500	585	577
40	93	167	316	336	309	381	385	428	372	428	525	635	624
41	95	172	327	351	324	401	405	448	390	450	552	685	673
42	95	176	338	365	340	419	424	468	410	469	577	730	718
43	97	180	347	378	356	437	442	487	428	489	604	774	761
44	97	185	358	392	372	455	462	505	448	509	631	815	795
45	99	189	367	405	387	473	480	525	466	531	658	869	849
46	100	192	376	417	403	489	498	543	484	550	684	914	900
47	104	198	385	430	419	507	516	563	504	572	711	955	941
48	102	201	392	441	432	522	532	581	522	594	738	991	977
49	104	207	401	451	446	538	550	599	540	615	763	1024	1008
50	106	212	410	464	462	552	567	617	558	637	788	1054	1035
51	106	216	419	475	475	567	579	633	576	657	822	1080	1058

Time (min)	TC #1 (°F)	TC #2 (°F)	TC #3 (°F)	TC #4 (°F)	TC #5 (°F)	TC #6 (°F)	TC #7 (°F)	TC #8 (°F)	TC #9 (°F)	TC #10 (°F)	TC #11 (°F)	TC #12 (°F)	TC #13 (°F)
52	108	216	424	486	487	581	594	648	594	678	853	1107	1081
53	109	221	432	496	500	595	608	664	612	700	883	1130	1103
54	108	223	437	505	513	610	622	680	630	721	912	1155	1125
55	109	228	441	514	525	624	637	694	648	741	937	1177	1146
56	111	232	448	523	536	637	649	711	666	765	963	1198	1166
57	111	234	453	532	549	651	664	725	685	786	986	1218	1184
58	113	237	460	541	561	664	678	741	702	811	1006	1238	1202
59	115	241	466	550	572	676	693	756	720	833	1024	1256	1220
60	117	244	471	561	585	689	707	770	738	855	1042	1274	1236
Max Temp:	117	244	471	561	585	689	707	770	738	855	1042	1274	1236
Max Allowed:	397	397	397	397	397	397	397	397	397	397	397	397	397

Time (min)	TC #14 (°F)	TC #15 (°F)	TC #16 (°F)	TC #17 (°F)	TC #18 (°F)	TC #19 (°F)	TC #20 (°F)	TC #21 (°F)	TC #22 (°F)	TC #23 (°F)	TC #24 (°F)
0	72	72	72	72	72	72	73	73	73	72	72
1	73	72	72	72	72	73	73	73	73	73	72
2	73	73	73	73	73	73	73	73	73	73	72
3	75	77	75	75	75	75	73	75	73	75	73
4	81	82	79	79	77	77	77	77	75	77	73
5	86	86	84	82	81	81	79	82	77	79	75
6	90	90	86	86	84	84	82	86	79	79	75
7	93	93	90	90	88	88	86	90	81	81	77
8	97	97	91	95	91	90	90	91	82	81	77
9	100	100	93	100	95	93	91	93	86	82	77
10	104	106	97	106	100	95	95	97	88	84	77
11	108	109	100	111	106	99	97	99	90	84	77
12	111	115	106	118	111	102	100	100	90	86	77
13	117	122	111	126	117	108	104	104	93	88	77
14	122	129	117	133	124	111	108	108	95	90	79
15	129	136	122	142	129	117	111	111	97	91	79
16	136	144	129	149	136	124	115	115	100	93	79
17	142	151	135	158	144	129	120	120	104	95	79
18	149	158	140	167	151	135	126	126	108	99	79
19	156	165	145	176	158	140	131	131	111	100	81
20	162	171	151	183	163	145	136	136	117	104	81
21	169	178	158	194	171	153	142	142	120	108	82
22	174	183	163	201	178	158	147	147	126	111	82
23	181	192	169	212	185	163	153	153	129	113	82
24	187	207	176	221	194	171	158	158	133	117	84
25	192	219	187	230	201	176	163	163	136	118	84
26	207	234	198	239	208	185	169	169	140	122	86
27	225	248	208	248	217	194	174	176	144	124	86
28	241	264	219	259	226	205	180	183	147	126	86
29	259	282	232	268	237	216	185	192	151	129	88
30	280	302	244	279	250	226	194	201	154	131	88
31	302	324	259	289	262	241	208	212	158	135	88
32	327	347	275	300	277	259	226	225	163	136	90
33	360	374	297	313	300	288	257	248	174	144	320
34	392	405	320	325	327	324	298	279	189	149	237
35	424	433	342	340	358	367	349	306	201	154	171
36	459	462	361	356	383	405	388	327	212	158	93
37	496	493	383	372	410	439	421	351	221	162	279
38	532	523	405	388	439	471	451	374	232	167	108
39	568	554	428	406	468	502	482	399	244	172	93
40	606	585	448	426	496	531	509	424	257	178	93
41	646	615	471	446	525	559	534	450	271	185	93
42	684	648	493	466	554	588	561	471	286	192	95
43	721	680	516	486	583	615	586	493	300	199	97
44	759	712	540	507	610	644	610	513	316	208	97
45	792	745	563	529	639	671	633	532	333	216	99
46	833	775	586	550	666	696	657	550	347	226	100
47	876	804	613	574	693	720	678	568	365	235	100
48	916	847	640	595	720	745	700	586	381	246	102
49	952	883	667	619	747	766	720	603	399	257	102
50	981	918	693	640	770	786	739	621	417	268	104
51	1006	948	718	664	795	811	757	639	437	280	104

Time (min)	TC #14 (°F)	TC #15 (°F)	TC #16 (°F)	TC #17 (°F)	TC #18 (°F)	TC #19 (°F)	TC #20 (°F)	TC #21 (°F)	TC #22 (°F)	TC #23 (°F)	TC #24 (°F)
52	1027	973	743	685	828	846	774	655	455	291	106
53	1047	995	770	705	856	876	792	673	473	302	108
54	1067	1015	799	727	883	901	815	691	493	315	108
55	1085	1033	828	748	907	925	837	705	511	325	108
56	1101	1049	856	768	927	943	856	721	529	336	111
57	1121	1065	882	790	946	957	876	738	547	349	111
58	1137	1081	903	811	963	970	894	752	563	360	113
59	1153	1096	923	833	979	981	909	766	577	370	113
60	1170	1110	943	853	993	995	923	781	594	381	115
Max Temp:	1170	1110	943	853	993	995	923	781	594	381	320
Max Allowed:	397	397	397	397	397	397	398	398	398	397	397

Time (min)	TC #25 (°F)	TC #26 (°F)	TC #27 (°F)	TC #28 (°F)	TC #29 (°F)	TC #30 (°F)	TC #31 (°F)	TC #32 (°F)	TC #33 (°F)	TC #34 (°F)	TC #35 (°F)
0	72	72	72	73	72	73	72	72	72	72	72
1	72	72	72	77	73	73	72	72	72	72	73
2	73	73	73	79	73	75	73	73	72	73	73
3	79	81	79	79	81	79	77	75	75	77	75
4	84	86	84	82	88	84	82	77	79	82	79
5	88	91	88	84	93	91	88	81	82	86	82
6	90	93	90	86	97	97	91	84	86	90	86
7	91	97	93	90	100	100	95	86	90	93	90
8	93	99	95	91	104	104	99	90	91	97	93
9	93	100	97	95	108	108	102	91	95	99	95
10	95	102	100	97	113	111	106	95	97	102	99
11	97	106	104	100	118	115	109	99	100	106	102
12	99	109	108	106	124	120	115	102	106	111	106
13	100	113	113	111	129	126	120	108	109	115	111
14	104	118	118	115	136	131	127	111	115	122	115
15	106	122	124	120	144	138	133	117	120	127	118
16	109	127	129	127	151	145	140	122	126	133	126
17	111	133	136	133	158	151	147	127	133	138	131
18	115	136	142	140	165	158	154	135	140	145	140
19	118	142	147	145	172	165	162	140	147	153	147
20	122	147	153	153	181	171	169	147	153	160	156
21	126	154	158	158	192	178	176	154	162	169	165
22	129	160	165	165	203	185	187	162	171	178	178
23	133	169	172	172	216	199	198	169	181	192	192
24	136	180	183	178	230	214	210	176	192	210	212
25	140	190	194	187	244	228	223	183	207	230	234
26	144	203	207	198	261	243	235	194	221	253	261
27	147	216	219	208	279	259	252	207	237	280	291
28	153	230	234	221	298	279	268	219	257	309	329
29	156	244	252	235	320	300	286	234	279	342	370
30	162	262	270	252	343	324	306	250	300	372	412
31	169	279	289	268	367	352	325	266	324	403	451
32	180	298	309	288	394	387	349	286	347	433	498
33	271	356	378	457	455	457	426	356	412	475	603
34	459	441	509	450	527	534	595	403	626	604	676
35	525	412	507	387	532	482	540	372	556	698	725
36	414	369	507	378	493	498	455	372	468	684	925
37	437	486	468	469	559	579	570	435	522	716	1080
38	268	397	423	435	550	558	509	428	541	738	1112
39	221	410	439	450	574	583	534	444	554	772	1098
40	226	424	457	475	599	612	561	468	586	799	1105
41	230	441	475	498	626	640	586	491	615	826	1103
42	237	459	493	520	651	667	613	516	644	842	1110
43	241	478	509	543	676	696	639	541	673	867	1121
44	246	480	525	565	702	721	662	565	698	889	1134
45	252	480	540	586	725	747	685	590	721	910	1150
46	255	486	552	608	748	770	707	613	741	932	1166
47	259	489	565	630	770	792	729	637	766	955	1186
48	262	496	577	649	790	815	750	660	788	977	1207
49	264	500	590	669	811	838	772	684	813	1000	1229
50	270	505	603	691	833	860	788	705	838	1022	1247
51	271	513	615	711	853	880	806	729	860	1042	1261

Time (min)	TC #25 (°F)	TC #26 (°F)	TC #27 (°F)	TC #28 (°F)	TC #29 (°F)	TC #30 (°F)	TC #31 (°F)	TC #32 (°F)	TC #33 (°F)	TC #34 (°F)	TC #35 (°F)
52	275	518	628	730	873	896	828	750	885	1062	1278
53	279	525	639	750	887	912	846	772	907	1081	1294
54	282	532	653	770	903	928	865	793	930	1101	1314
55	286	540	664	788	921	946	885	817	954	1121	1330
56	289	547	675	808	939	966	901	838	975	1141	1346
57	293	554	687	828	957	986	921	862	997	1159	1362
58	295	561	700	846	973	1000	941	883	1018	1177	1375
59	298	568	712	864	988	1011	959	907	1038	1193	1389
60	302	576	723	878	1000	1020	973	927	1054	1207	1404
Max Temp:	525	576	723	878	1000	1020	973	927	1054	1207	1404
Max Allowed:	397	397	397	398	397	398	397	397	397	397	397

Time (min)	TC #36 (°F)	TC #37 (°F)	TC #38 (°F)	TC #39 (°F)	TC #40 (°F)	TC #41 (°F)	TC #42 (°F)	TC #43 (°F)	TC #44 (°F)	TC #45 (°F)	TC #46 (°F)
0	72	72	72	72	73	72	72	72	72	73	72
1	73	73	73	72	73	72	75	73	73	73	72
2	75	75	75	75	73	75	86	84	77	73	73
3	77	84	84	77	73	79	91	99	84	75	75
4	82	90	91	81	75	84	99	106	95	77	77
5	88	95	97	86	77	88	104	111	102	79	77
6	91	99	102	90	81	91	108	118	109	82	79
7	93	102	106	91	82	93	111	122	113	84	81
8	97	106	111	95	84	97	118	127	118	88	82
9	100	111	117	99	86	100	126	135	124	91	82
10	106	115	124	102	90	104	135	142	129	93	84
11	111	122	131	108	93	111	147	149	131	95	86
12	117	129	140	113	97	118	165	160	133	97	88
13	122	138	149	120	100	127	190	176	138	99	90
14	127	147	158	129	104	138	219	198	145	100	91
15	135	158	167	140	109	151	252	225	156	104	93
16	142	172	178	154	115	165	288	255	169	108	95
17	149	189	196	174	120	183	331	325	183	115	97
18	158	212	221	196	127	207	383	361	201	120	100
19	165	234	248	217	135	230	430	394	223	127	102
20	178	257	279	239	142	252	473	432	248	136	106
21	190	284	313	262	151	277	514	473	275	145	108
22	203	311	349	288	158	302	556	516	306	162	111
23	217	340	387	313	167	327	597	565	342	183	115
24	234	369	426	342	178	358	644	615	383	205	118
25	253	399	464	370	189	388	684	662	426	230	122
26	275	428	500	399	203	419	721	709	475	255	127
27	298	459	536	430	217	448	750	752	523	280	133
28	324	491	570	460	234	475	774	793	574	307	140
29	352	525	603	493	250	504	801	838	633	338	145
30	381	558	637	559	268	532	824	883	711	379	154
31	412	594	669	622	288	558	847	928	772	406	162
32	446	633	702	628	309	585	874	975	817	437	171
33	489	687	743	660	381	648	936	1083	927	468	187
34	601	802	817	732	385	738	1015	1150	1022	511	212
35	626	873	851	777	430	711	1074	1186	1047	561	223
36	622	838	853	804	419	739	1087	1191	1049	622	232
37	786	964	997	889	448	763	1090	1191	1054	648	244
38	856	988	1026	925	482	802	1107	1200	1065	671	257
39	923	997	1024	943	513	826	1116	1215	1072	693	270
40	984	1011	1026	952	545	844	1126	1225	1083	711	282
41	986	1029	1035	970	576	865	1139	1236	1092	725	293
42	995	1042	1044	990	608	887	1152	1245	1098	736	302
43	1009	1056	1056	1009	640	910	1162	1251	1107	747	311
44	1026	1071	1067	1029	673	930	1170	1252	1108	756	320
45	1042	1083	1078	1049	705	950	1179	1254	1108	766	327
46	1060	1098	1090	1071	736	970	1188	1256	1110	775	334
47	1078	1112	1105	1098	768	990	1202	1261	1112	786	343
48	1096	1128	1119	1114	799	1009	1215	1269	1116	799	352
49	1116	1144	1134	1128	828	1027	1225	1278	1123	811	360
50	1134	1161	1150	1141	856	1042	1234	1285	1130	824	370
51	1152	1177	1164	1155	883	1058	1245	1292	1137	837	379

Time (min)	TC #36 (°F)	TC #37 (°F)	TC #38 (°F)	TC #39 (°F)	TC #40 (°F)	TC #41 (°F)	TC #42 (°F)	TC #43 (°F)	TC #44 (°F)	TC #45 (°F)	TC #46 (°F)
52	1170	1191	1177	1168	910	1067	1251	1299	1144	847	387
53	1188	1207	1189	1180	936	1080	1258	1305	1152	858	396
54	1206	1222	1202	1193	961	1092	1267	1312	1161	871	405
55	1224	1236	1216	1206	982	1103	1272	1317	1166	878	414
56	1240	1251	1227	1216	1004	1116	1283	1323	1170	891	423
57	1256	1265	1240	1229	1022	1128	1292	1330	1177	901	432
58	1270	1279	1251	1240	1040	1143	1301	1337	1179	910	441
59	1287	1292	1263	1252	1054	1153	1308	1344	1186	923	451
60	1301	1306	1274	1261	1069	1164	1317	1350	1193	936	464
Max Temp:	1301	1306	1274	1261	1069	1164	1317	1350	1193	936	464
Max Allowed:	397	397	397	397	398	397	397	397	397	398	397

Time (min)	TC #47 (°F)	TC #48 (°F)	TC #49 (°F)	TC #50 (°F)	TC #51 (°F)	TC #52 (°F)	TC #53 (°F)	TC #54 (°F)	TC #55 (°F)	TC #56 (°F)	TC #57 (°F)
0	72	72	72	72	72	72	72	72	72	72	72
1	72	72	72	73	72	72	72	72	72	72	72
2	72	73	73	75	73	73	75	73	72	72	73
3	73	77	81	82	81	81	82	79	77	73	73
4	75	82	86	90	88	86	88	86	81	77	75
5	75	84	90	93	93	91	93	90	86	81	77
6	77	88	93	95	95	95	97	93	90	84	81
7	79	88	93	97	97	97	99	97	93	86	84
8	79	90	95	99	99	99	100	99	95	90	88
9	81	90	97	100	100	100	102	100	97	91	90
10	81	90	97	100	102	104	106	102	99	95	93
11	81	91	99	102	106	106	109	104	100	97	95
12	82	93	102	106	108	111	115	109	104	99	97
13	82	93	104	108	111	115	118	113	106	100	97
14	82	95	108	111	115	118	124	118	109	104	99
15	82	97	109	115	120	124	133	124	115	106	100
16	84	100	113	118	126	131	140	131	118	109	102
17	84	102	117	124	131	140	149	138	126	113	106
18	86	104	122	131	140	149	160	147	133	118	111
19	86	108	127	138	149	158	171	156	140	124	115
20	86	109	133	147	160	169	183	167	149	129	122
21	88	113	140	158	171	180	196	180	158	136	127
22	90	117	147	169	181	190	210	192	169	144	135
23	91	122	154	178	194	205	226	205	180	153	142
24	91	126	163	189	207	219	243	219	190	162	151
25	93	133	174	201	221	235	259	235	203	172	160
26	95	138	185	214	235	252	275	252	216	183	169
27	97	144	194	226	252	270	293	266	230	194	180
28	99	149	207	241	268	286	309	284	246	208	192
29	100	156	219	257	286	306	327	300	262	223	205
30	102	162	232	273	304	324	345	318	280	239	221
31	104	169	244	289	322	342	361	334	297	255	239
32	106	176	259	306	342	361	379	352	315	275	261
33	108	183	273	324	360	381	397	370	334	297	284
34	109	192	288	340	381	401	415	388	352	320	309
35	113	199	302	358	401	421	433	406	372	345	338
36	115	208	316	376	421	441	451	424	392	369	369
37	118	216	329	394	441	459	469	444	412	394	403
38	122	225	343	410	460	478	487	462	433	421	441
39	122	232	358	426	478	496	505	480	453	450	478
40	124	239	370	441	496	514	522	496	471	475	509
41	126	248	379	457	514	531	541	516	493	500	541
42	127	253	392	469	531	549	558	534	511	525	574
43	129	261	403	482	549	567	576	550	529	550	606
44	133	268	415	496	565	583	590	567	549	577	635
45	136	277	426	509	581	599	608	583	568	604	664
46	151	291	437	522	599	613	626	603	592	631	691
47	153	300	448	536	612	630	642	621	612	658	721
48	160	313	455	550	628	646	658	635	631	685	754
49	156	315	464	561	640	658	671	651	649	712	781
50	147	315	473	572	653	675	682	667	666	734	806
51	158	334	489	588	666	694	700	682	684	757	833

Time (min)	TC #47 (°F)	TC #48 (°F)	TC #49 (°F)	TC #50 (°F)	TC #51 (°F)	TC #52 (°F)	TC #53 (°F)	TC #54 (°F)	TC #55 (°F)	TC #56 (°F)	TC #57 (°F)
52	167	352	504	604	680	712	718	696	700	779	858
53	178	351	511	612	694	725	729	712	716	804	889
54	185	349	514	619	711	734	741	727	734	833	919
55	167	345	518	621	725	743	748	743	752	867	950
56	158	343	523	630	738	756	763	756	766	903	984
57	162	351	529	639	747	770	777	766	781	937	1009
58	176	363	538	649	756	786	790	781	799	964	1022
59	189	374	550	658	768	802	806	801	820	990	1033
60	172	369	558	667	781	815	820	824	842	1004	1047
Max Temp:	189	374	558	667	781	815	820	824	842	1004	1047
Max Allowed:	397	397	397	397	397	397	397	397	397	397	397

Time (min)	TC #58 (°F)	TC #59 (°F)	TC #60 (°F)	TC #61 (°F)	TC #62 (°F)	TC #63 (°F)	TC #64 (°F)	TC #65 (°F)	TC #66 (°F)	TC #67 (°F)	TC #68 (°F)
0	72	73	72	72	72	72	72	72	73	73	73
1	75	77	73	72	72	72	72	73	73	73	73
2	75	75	75	73	73	73	73	73	73	73	73
3	75	77	77	75	75	75	77	75	75	73	73
4	77	79	81	81	81	81	82	79	77	75	75
5	81	82	86	84	84	84	84	82	81	79	77
6	84	86	88	88	86	88	88	84	84	81	77
7	86	90	91	90	90	90	90	86	86	82	79
8	90	91	93	93	91	93	91	88	88	84	81
9	91	93	97	95	93	95	93	90	90	86	81
10	93	97	100	99	97	99	97	91	91	86	82
11	95	99	104	102	100	102	100	93	93	88	82
12	97	100	108	106	104	108	104	97	93	88	84
13	97	102	111	111	111	113	109	100	97	90	84
14	100	104	115	117	117	118	115	104	99	91	86
15	102	108	120	122	122	126	120	108	102	93	86
16	106	111	126	126	126	131	126	111	108	95	90
17	109	115	129	129	131	136	131	117	111	100	91
18	115	118	133	133	135	142	138	122	118	106	95
19	122	124	135	138	140	149	145	131	124	111	99
20	129	131	140	145	147	160	154	138	131	117	102
21	136	138	147	156	158	171	165	147	138	120	106
22	144	147	160	167	171	185	180	158	145	127	109
23	153	156	174	180	183	199	194	169	156	133	113
24	162	167	189	194	198	214	208	183	171	142	118
25	172	180	205	208	212	230	226	199	185	149	122
26	185	194	223	226	230	248	246	217	203	158	127
27	198	208	241	246	248	266	266	239	223	174	133
28	214	226	261	266	268	286	288	262	246	190	140
29	234	248	282	289	288	306	313	291	275	210	149
30	253	271	306	313	307	327	340	324	311	235	160
31	277	295	329	336	331	351	369	360	351	262	172
32	300	322	356	361	354	376	399	401	394	295	187
33	334	354	385	390	383	406	442	498	558	367	207
34	369	388	417	424	419	448	507	657	721	486	239
35	403	426	451	459	459	493	601	826	793	554	273
36	444	466	487	496	496	540	691	900	846	590	302
37	507	523	532	541	532	583	741	901	883	622	327
38	561	585	601	639	579	630	788	925	912	653	351
39	606	644	675	721	630	676	835	934	930	680	376
40	653	702	732	754	680	718	871	932	932	700	396
41	700	754	775	779	725	756	900	936	936	716	415
42	745	795	813	806	763	786	928	943	936	729	432
43	783	831	846	833	792	815	954	946	936	738	446
44	819	871	880	864	815	846	979	954	937	745	459
45	856	919	925	894	838	878	997	963	939	752	469
46	896	970	972	932	864	909	1004	970	943	757	480
47	932	991	995	964	894	941	1004	982	952	765	491
48	963	1004	1004	981	930	972	1008	993	961	772	500
49	990	1018	1015	993	975	991	1015	1004	968	781	511
50	1017	1036	1026	1008	1008	999	1024	1017	975	790	520
51	1044	1058	1042	1022	1017	993	1035	1027	986	801	529

Time (min)	TC #58 (°F)	TC #59 (°F)	TC #60 (°F)	TC #61 (°F)	TC #62 (°F)	TC #63 (°F)	TC #64 (°F)	TC #65 (°F)	TC #66 (°F)	TC #67 (°F)	TC #68 (°F)
52	1067	1078	1060	1036	1018	990	1042	1033	991	811	541
53	1094	1099	1078	1049	1020	991	1051	1044	1002	822	550
54	1123	1121	1096	1062	1024	999	1062	1054	1009	833	561
55	1148	1141	1112	1071	1029	1006	1071	1062	1017	842	572
56	1173	1161	1130	1083	1035	1017	1081	1072	1026	855	583
57	1198	1180	1146	1096	1042	1029	1094	1083	1036	865	594
58	1220	1198	1161	1107	1047	1040	1105	1094	1045	876	604
59	1242	1216	1177	1117	1054	1053	1116	1103	1054	887	617
60	1260	1233	1193	1130	1062	1063	1128	1114	1067	900	630
Max Temp:	1260	1233	1193	1130	1062	1063	1128	1114	1067	900	630
Max Allowed:	397	398	397	397	397	397	397	397	398	398	398

Time (min)	TC #69 (°F)	TC #70 (°F)	TC #71 (°F)	TC #72 (°F)	TC #73 (°F)	TC #74 (°F)	TC #75 (°F)	TC #76 (°F)	TC #77 (°F)	TC #78 (°F)	TC #79 (°F)
0	73	73	72	72	72	72	72	72	72	72	72
1	73	73	73	73	72	72	73	73	72	72	73
2	73	75	75	73	73	72	73	73	73	73	73
3	73	75	77	75	73	73	75	73	73	73	75
4	73	75	79	79	75	73	75	77	75	73	77
5	75	77	81	81	79	75	79	79	79	75	79
6	75	77	82	82	81	77	81	81	81	77	81
7	75	79	84	84	82	79	82	84	82	79	82
8	77	79	86	86	84	81	84	86	86	81	86
9	77	81	88	88	86	82	86	88	88	84	88
10	77	81	90	91	88	84	90	90	90	86	90
11	79	82	93	95	91	88	91	93	93	88	93
12	79	84	97	99	95	90	95	97	97	91	99
13	79	86	100	102	99	93	100	102	102	97	102
14	79	86	104	106	102	99	104	106	108	100	108
15	81	90	108	109	108	102	109	111	111	106	113
16	81	91	111	113	111	108	113	117	117	111	118
17	82	93	117	118	117	113	118	120	122	117	124
18	82	95	120	122	122	117	124	126	126	122	129
19	84	97	124	126	126	122	129	129	131	127	133
20	84	100	127	129	129	126	133	135	133	131	136
21	86	102	131	133	135	129	136	138	136	135	142
22	88	104	133	138	136	133	140	140	140	138	149
23	90	104	136	144	140	136	144	145	147	140	158
24	91	106	140	151	145	140	151	153	154	142	167
25	93	108	145	158	149	144	160	162	163	144	176
26	95	108	153	167	158	147	169	172	172	153	189
27	97	108	160	178	165	154	180	185	185	162	201
28	100	109	169	187	176	163	192	198	198	172	216
29	102	109	176	198	187	172	205	212	212	185	230
30	106	111	185	208	198	183	217	228	226	198	246
31	109	115	194	219	208	194	232	244	243	212	262
32	115	118	205	232	219	205	246	262	261	226	280
33	120	122	216	246	234	217	262	279	279	241	300
34	129	127	226	261	248	232	279	297	297	257	318
35	138	133	239	275	264	246	297	316	316	275	340
36	149	138	250	289	280	261	313	334	336	293	360
37	156	144	262	304	297	277	331	352	356	311	381
38	165	149	275	320	313	293	349	372	376	331	405
39	172	156	288	336	329	309	370	394	397	351	428
40	180	162	300	352	347	327	390	417	421	370	451
41	189	167	313	369	363	345	412	439	444	394	477
42	196	172	325	383	381	363	435	460	468	415	502
43	201	180	338	399	399	383	455	484	489	439	529
44	208	185	351	415	417	401	477	505	513	462	554
45	216	190	363	430	435	421	496	527	536	486	581
46	221	196	378	446	453	441	518	547	558	511	606
47	226	203	388	460	471	460	538	568	579	534	633
48	232	208	403	478	489	478	558	590	603	559	660
49	237	216	417	493	507	498	577	612	626	583	685
50	243	223	432	509	523	518	597	633	648	608	709
51	250	228	444	523	541	536	617	653	669	633	732

Time (min)	TC #69 (°F)	TC #70 (°F)	TC #71 (°F)	TC #72 (°F)	TC #73 (°F)	TC #74 (°F)	TC #75 (°F)	TC #76 (°F)	TC #77 (°F)	TC #78 (°F)	TC #79 (°F)
52	255	235	457	538	559	556	637	673	689	662	754
53	261	243	469	554	576	576	655	691	709	691	777
54	266	248	482	568	594	594	675	711	729	718	802
55	271	255	495	583	612	613	693	729	748	743	833
56	279	262	509	599	630	635	711	747	766	766	858
57	284	270	523	615	649	657	729	763	784	788	883
58	291	277	538	631	669	678	745	779	802	811	907
59	297	282	550	646	687	700	759	792	824	835	927
60	304	289	565	662	705	720	775	813	844	856	945
Max Temp:	304	289	565	662	705	720	775	813	844	856	945
Max Allowed:	398	398	397	397	397	397	397	397	397	397	397

Time (min)	TC #80 (°F)	TC #81 (°F)	TC #82 (°F)	TC #83 (°F)	TC #84 (°F)	TC #85 (°F)	TC #86 (°F)	TC #87 (°F)	TC #88 (°F)	TC #89 (°F)	TC #90 (°F)
0	73	73	72	72	72	72	72	72	72	73	73
1	75	73	73	73	75	73	73	73	75	75	79
2	75	73	75	73	75	75	73	75	77	79	82
3	77	73	77	75	77	77	73	77	79	81	82
4	79	73	79	79	79	79	75	81	81	82	82
5	82	73	82	82	82	81	75	82	82	82	82
6	84	73	84	84	84	81	77	82	84	84	82
7	86	73	86	86	86	82	79	84	84	84	84
8	88	73	90	88	88	84	79	86	86	86	84
9	90	75	91	91	90	86	81	88	88	88	86
10	93	75	95	93	93	88	82	90	90	90	88
11	97	75	99	97	97	91	84	93	91	91	90
12	102	75	102	102	100	95	86	95	95	95	91
13	108	75	108	106	104	99	90	99	99	99	95
14	111	75	111	111	108	102	93	104	102	102	97
15	117	75	117	115	113	106	95	108	106	106	100
16	122	75	122	120	117	111	100	111	111	108	104
17	126	75	126	124	122	115	104	115	113	111	108
18	131	75	129	127	126	118	108	118	117	115	111
19	136	75	133	133	133	122	111	120	122	118	115
20	140	75	138	140	140	126	115	126	127	124	120
21	144	75	145	149	147	133	118	133	135	129	126
22	151	75	154	160	158	140	122	140	142	136	131
23	160	75	165	172	169	147	124	151	149	144	138
24	172	75	180	185	181	156	126	160	160	153	145
25	185	75	196	201	198	167	129	172	169	162	154
26	199	75	212	217	212	178	138	185	181	172	163
27	214	75	230	235	230	190	145	198	194	183	172
28	230	75	248	255	248	205	156	212	208	194	183
29	246	77	268	275	266	219	165	226	221	205	194
30	264	77	289	295	284	234	176	241	235	217	205
31	284	77	309	316	304	248	187	255	248	230	217
32	302	77	333	338	324	264	199	270	262	243	230
33	322	77	354	360	345	280	212	284	277	257	243
34	343	77	378	383	365	297	226	300	291	271	257
35	365	77	403	406	387	315	239	315	306	288	270
36	388	77	426	430	408	331	253	331	322	302	284
37	412	77	451	453	432	349	268	347	338	318	298
38	437	79	477	477	453	367	282	363	354	334	313
39	462	79	502	502	477	385	298	379	370	351	327
40	487	79	527	525	498	405	313	397	388	367	342
41	514	79	552	549	522	424	329	414	406	385	358
42	540	79	579	574	543	442	347	432	424	403	374
43	568	81	606	597	567	462	363	451	444	421	390
44	595	79	633	622	590	482	381	469	462	439	406
45	624	79	660	648	613	502	399	487	480	455	423
46	651	79	685	671	637	523	417	507	498	473	439
47	678	79	711	694	658	545	437	527	516	491	455
48	705	81	734	716	682	567	457	549	536	509	471
49	730	81	757	738	703	588	480	568	556	527	486
50	754	81	779	759	725	612	502	590	576	545	502
51	777	81	799	781	747	633	522	610	594	565	518

Time (min)	TC #80 (°F)	TC #81 (°F)	TC #82 (°F)	TC #83 (°F)	TC #84 (°F)	TC #85 (°F)	TC #86 (°F)	TC #87 (°F)	TC #88 (°F)	TC #89 (°F)	TC #90 (°F)
52	797	81	828	799	766	655	543	630	613	583	534
53	826	81	860	829	788	673	563	649	633	601	550
54	858	81	885	860	808	693	583	666	651	621	568
55	885	82	910	883	840	712	603	682	667	639	583
56	909	84	930	907	869	730	622	700	684	655	599
57	930	84	950	927	891	748	642	716	700	671	615
58	950	86	964	943	910	768	664	730	716	687	630
59	966	84	981	959	925	792	684	747	730	700	644
60	981	84	995	972	939	817	705	761	745	714	657
Max Temp:	981	86	995	972	939	817	705	761	745	714	657
Max Allowed:	398	398	397	397	397	397	397	397	397	398	398

Time (min)	TC #91 (°F)	TC #92 (°F)	TC #93 (°F)	TC #94 (°F)	TC #95 (°F)	TC #96 (°F)	TC #97 (°F)	TC #98 (°F)	TC #99 (°F)	TC #100 (°F)	TC #101 (°F)
0	73	72	73	72	72	72	72	72	73	73	72
1	79	81	73	73	73	72	72	73	73	73	72
2	84	86	73	73	73	73	72	73	73	73	72
3	82	84	73	77	75	73	73	73	75	75	73
4	82	82	75	81	79	77	73	77	77	77	73
5	82	81	75	82	81	79	75	79	81	79	75
6	82	81	77	84	82	81	77	81	82	82	77
7	82	81	77	86	84	82	79	82	84	84	79
8	84	82	77	86	86	84	82	86	86	86	81
9	84	82	79	88	88	86	84	88	90	88	82
10	86	84	79	91	91	90	86	90	91	91	86
11	88	86	81	93	93	91	90	93	95	95	88
12	90	88	81	99	97	95	93	97	99	99	91
13	91	90	82	100	100	99	97	100	104	104	97
14	95	91	84	106	106	104	100	106	108	108	100
15	97	95	86	111	111	108	104	109	113	113	106
16	100	97	88	115	115	113	109	115	117	118	111
17	104	100	90	118	120	117	115	120	122	124	117
18	108	104	91	122	124	122	118	126	127	127	122
19	111	108	93	126	127	126	124	129	131	133	127
20	117	111	95	129	131	129	127	133	136	136	133
21	122	115	97	131	135	133	131	136	140	138	136
22	127	118	99	135	140	138	135	140	144	144	140
23	135	122	100	138	147	144	138	145	154	151	142
24	142	126	102	144	154	151	142	153	163	158	144
25	149	131	102	151	160	158	144	162	176	169	145
26	156	136	104	158	171	167	149	171	187	178	151
27	165	144	104	169	183	176	158	183	201	190	162
28	174	151	106	178	198	187	167	196	217	205	171
29	185	158	109	190	210	199	176	208	234	219	181
30	194	167	113	201	225	212	187	225	252	235	194
31	205	174	117	214	237	226	199	241	271	253	208
32	216	183	120	226	253	243	212	259	291	271	223
33	226	190	124	239	270	259	226	277	313	291	237
34	239	201	127	252	284	275	241	297	334	311	253
35	250	208	133	264	300	291	257	316	356	331	270
36	262	217	136	279	316	309	275	336	378	352	288
37	275	226	140	291	334	327	291	358	401	374	306
38	288	237	145	306	352	347	309	379	424	396	324
39	300	246	151	318	365	363	329	399	446	417	343
40	313	257	154	333	381	379	345	421	466	441	365
41	325	266	160	345	396	396	365	441	487	464	387
42	340	277	165	360	412	412	383	462	509	487	408
43	352	288	169	374	426	430	401	482	531	511	432
44	367	298	174	387	442	448	421	502	552	532	455
45	381	309	180	401	459	464	441	523	574	556	478
46	394	318	185	414	473	482	459	543	595	577	504
47	406	331	190	428	489	500	478	563	617	601	527
48	421	342	196	442	504	518	498	583	639	624	550
49	433	351	201	459	520	536	518	603	658	648	576
50	448	361	208	471	534	554	536	624	678	669	599
51	464	374	214	486	550	572	556	644	696	691	626

Time (min)	TC #91 (°F)	TC #92 (°F)	TC #93 (°F)	TC #94 (°F)	TC #95 (°F)	TC #96 (°F)	TC #97 (°F)	TC #98 (°F)	TC #99 (°F)	TC #100 (°F)	TC #101 (°F)
52	477	385	219	500	565	588	576	662	714	711	653
53	487	399	226	513	579	606	594	680	730	730	682
54	500	410	232	527	595	624	613	698	748	750	711
55	511	421	237	543	612	640	635	712	763	768	738
56	523	430	246	558	626	658	658	729	781	784	763
57	536	441	252	572	640	676	682	745	793	801	786
58	547	450	257	588	655	694	700	759	811	820	811
59	559	459	264	604	669	712	721	774	829	840	837
60	570	466	270	619	684	730	743	786	846	860	860
Max Temp:	570	466	270	619	684	730	743	786	846	860	860
Max Allowed:	398	397	398	397	397	397	397	397	398	398	397

Time (min)	TC #102 (°F)	TC #103 (°F)	TC #104 (°F)	TC #105 (°F)	TC #106 (°F)	TC #107 (°F)	TC #108 (°F)	TC #109 (°F)	TC #110 (°F)	TC #111 (°F)
0	72	72	72	72	72	72	72	73	73	72
1	72	73	73	75	73	73	75	73	75	75
2	73	73	73	75	73	73	75	73	75	77
3	73	75	75	77	77	77	77	73	79	79
4	75	79	77	79	81	81	79	75	81	81
5	79	81	81	82	82	82	81	77	82	82
6	81	82	82	84	84	84	82	77	82	82
7	82	86	86	86	86	86	82	79	84	84
8	84	88	88	88	88	88	84	81	84	84
9	86	90	90	91	90	90	86	81	86	86
10	90	93	93	93	93	93	90	82	88	88
11	93	97	97	99	97	97	91	84	90	90
12	97	102	102	102	100	100	95	88	93	91
13	102	108	108	106	106	104	99	90	95	95
14	106	113	113	111	109	108	102	93	99	99
15	111	118	118	117	115	111	106	95	104	102
16	117	122	124	122	118	117	109	99	108	108
17	122	127	129	126	126	122	115	102	113	111
18	127	135	135	129	131	127	118	106	117	115
19	133	140	140	135	136	131	122	109	120	118
20	136	144	145	138	140	138	127	113	124	126
21	140	145	149	145	147	147	135	115	131	133
22	144	147	151	154	158	158	142	117	138	140
23	149	158	151	165	171	171	151	120	147	149
24	156	171	153	178	183	183	162	126	156	160
25	165	181	167	192	199	198	171	131	167	171
26	174	196	185	208	216	214	183	138	178	181
27	185	210	201	225	234	232	196	147	190	192
28	198	225	216	244	253	250	208	156	203	205
29	212	241	232	264	275	268	223	167	217	219
30	228	259	248	284	295	288	237	178	232	232
31	244	277	266	306	316	307	253	190	246	246
32	261	297	286	329	338	327	270	201	261	261
33	279	316	306	352	361	347	288	214	275	275
34	298	338	327	376	385	369	304	228	291	291
35	316	360	351	399	408	390	320	243	307	306
36	338	383	374	424	432	414	338	257	322	322
37	358	406	399	450	457	435	356	271	338	338
38	379	432	426	475	480	459	374	288	354	354
39	403	457	453	500	505	482	394	302	370	370
40	424	482	480	527	529	504	412	318	387	387
41	450	509	509	552	554	527	432	334	405	403
42	473	536	536	579	577	550	450	352	421	421
43	498	563	567	606	603	572	469	369	439	439
44	523	590	595	635	628	595	489	387	455	455
45	549	619	626	660	651	617	507	405	471	471
46	574	648	655	687	676	640	529	435	500	489
47	601	676	685	712	700	664	550	464	529	507
48	628	703	712	738	723	687	574	493	549	525
49	653	729	739	761	747	709	597	516	561	540
50	678	754	765	784	768	729	619	534	576	558
51	703	777	788	806	788	748	639	552	590	574

Time (min)	TC #102 (°F)	TC #103 (°F)	TC #104 (°F)	TC #105 (°F)	TC #106 (°F)	TC #107 (°F)	TC #108 (°F)	TC #109 (°F)	TC #110 (°F)	TC #111 (°F)
52	729	795	811	840	806	768	658	570	606	590
53	752	826	849	871	838	788	676	586	621	608
54	775	860	878	896	865	808	694	604	637	626
55	801	885	905	918	889	842	712	622	651	640
56	833	909	928	937	909	871	732	642	669	657
57	860	932	948	954	927	892	750	662	684	673
58	885	950	964	970	943	910	768	682	700	687
59	907	966	981	984	957	927	788	700	712	702
60	927	982	995	997	970	941	811	718	725	714
Max Temp:	927	982	995	997	970	941	811	718	725	714
Max Allowed:	397	397	397	397	397	397	397	398	398	397

Time (min)	TC #112 (°F)	TC #113 (°F)	TC #114 (°F)	TC #115 (°F)	TC #116 (°F)	TC #117 (°F)	TC #118 (°F)	TC #119 (°F)	TC #120 (°F)	TC #121 (°F)
0	72	72	72	72	73	72	72	72	73	72
1	77	79	79	79	73	73	73	73	73	73
2	79	82	82	82	73	73	73	73	73	73
3	82	82	81	79	73	77	77	77	77	75
4	82	82	81	79	75	81	81	81	81	79
5	82	82	81	79	75	82	84	84	84	82
6	82	82	81	79	77	84	86	86	88	84
7	84	82	81	79	77	86	86	88	90	86
8	84	82	81	81	79	88	88	90	91	90
9	86	82	82	81	79	90	91	91	95	91
10	86	84	82	82	81	93	93	93	97	93
11	88	86	86	84	82	97	97	97	100	97
12	91	90	88	86	82	100	100	100	104	100
13	95	93	90	88	84	104	104	104	108	104
14	99	95	93	90	86	108	108	108	113	109
15	102	99	95	93	88	111	111	113	118	113
16	106	104	99	95	90	115	117	118	124	117
17	109	108	104	99	91	118	120	122	127	122
18	115	111	108	102	93	122	126	127	133	126
19	118	115	111	106	95	126	131	133	138	133
20	126	120	115	109	97	129	136	140	145	140
21	131	126	120	111	99	131	140	145	154	147
22	138	133	126	115	100	133	144	154	165	156
23	147	140	133	120	100	135	149	162	176	167
24	156	147	138	124	100	142	162	172	187	176
25	167	156	147	129	102	149	172	183	198	189
26	176	165	154	135	106	160	185	194	210	201
27	189	176	163	142	109	172	198	208	226	216
28	201	187	172	149	113	183	212	223	244	232
29	214	198	183	158	118	196	225	239	264	248
30	228	208	192	165	124	207	241	257	284	266
31	241	221	203	172	127	219	255	277	306	286
32	255	234	214	181	133	232	273	297	329	306
33	271	246	225	190	138	244	289	316	349	327
34	288	261	237	199	144	259	306	334	370	347
35	302	275	248	208	149	273	322	354	392	369
36	318	289	261	216	154	288	340	374	414	388
37	334	304	271	225	162	304	358	392	435	410
38	351	318	284	234	169	322	376	412	455	432
39	367	333	295	241	176	340	396	432	475	453
40	385	347	307	252	183	356	414	450	495	475
41	401	363	320	261	192	372	432	468	514	496
42	417	379	334	273	199	387	450	486	532	518
43	435	396	349	284	207	403	466	504	552	540
44	453	410	361	293	214	419	484	522	570	561
45	469	426	372	300	219	433	502	540	590	581
46	486	441	385	309	226	450	518	556	608	603
47	504	455	397	315	234	466	536	574	626	622
48	522	473	412	329	241	482	552	592	646	644
49	536	487	423	333	250	496	568	608	664	662
50	552	502	435	342	259	511	585	626	682	682
51	570	518	450	352	264	527	601	644	698	700

Time (min)	TC #112 (°F)	TC #113 (°F)	TC #114 (°F)	TC #115 (°F)	TC #116 (°F)	TC #117 (°F)	TC #118 (°F)	TC #119 (°F)	TC #120 (°F)	TC #121 (°F)
52	586	532	460	363	271	540	617	658	714	720
53	604	549	475	370	279	556	633	676	730	736
54	621	563	487	378	286	570	648	693	747	752
55	637	579	500	390	293	586	664	709	761	768
56	655	597	516	408	302	603	680	723	777	784
57	671	613	531	421	309	619	698	741	792	801
58	685	628	545	433	316	635	714	757	808	817
59	700	642	558	442	325	651	729	774	824	833
60	712	653	567	446	333	666	743	790	840	851
Max Temp:	712	653	567	446	333	666	743	790	840	851
Max Allowed:	397	397	397	397	398	397	397	397	398	397

Time (min)	TC #122 (°F)	TC #123 (°F)	TC #124 (°F)	TC #125 (°F)	TC #126 (°F)	TC #127 (°F)	TC #128 (°F)	TC #129 (°F)	TC #130 (°F)	TC #131 (°F)
0	72	72	72	72	72	73	73	73	73	72
1	73	73	73	73	73	73	73	73	73	73
2	73	73	73	73	73	73	73	75	75	73
3	75	75	75	75	75	75	77	77	77	77
4	79	79	79	79	77	79	81	81	81	81
5	81	81	81	81	81	81	82	84	84	82
6	84	84	84	84	82	82	84	86	86	84
7	86	86	86	86	84	86	86	86	86	86
8	88	88	88	88	86	88	90	88	88	86
9	90	90	91	90	90	90	91	90	90	90
10	91	91	93	93	93	93	95	93	93	91
11	95	95	97	97	97	97	99	97	95	95
12	100	100	102	102	100	100	100	100	99	97
13	104	104	106	106	104	106	106	104	102	100
14	108	109	111	111	109	109	109	108	106	104
15	113	115	115	115	113	115	113	111	109	108
16	117	118	120	120	118	118	117	117	115	113
17	122	124	124	124	122	122	122	122	122	118
18	126	127	129	129	127	127	131	131	129	127
19	133	133	133	133	131	136	140	140	136	135
20	138	140	140	140	135	145	151	149	147	144
21	147	151	151	149	140	154	163	162	158	154
22	156	160	162	160	154	165	176	174	169	165
23	167	171	172	171	165	178	192	190	183	180
24	178	183	185	183	176	190	208	207	199	194
25	189	194	198	198	190	205	226	225	217	208
26	201	210	212	212	203	219	244	244	235	226
27	216	225	226	226	217	234	262	264	255	244
28	232	239	244	244	234	252	280	286	275	264
29	248	255	261	261	248	270	300	306	295	284
30	266	273	280	279	266	289	322	327	316	302
31	284	291	298	297	284	309	342	349	336	324
32	302	309	316	316	304	331	363	370	358	343
33	322	327	336	334	324	352	387	392	379	365
34	342	347	356	354	345	376	408	414	401	385
35	361	367	376	374	370	399	433	437	423	406
36	381	387	396	396	394	424	457	460	444	426
37	403	406	417	419	419	450	482	484	468	446
38	423	428	439	441	444	477	509	509	489	468
39	446	453	464	466	471	505	545	541	514	493
40	469	478	491	493	500	536	579	572	540	518
41	493	504	516	520	529	567	610	603	565	540
42	516	529	543	547	558	597	640	631	590	561
43	540	554	568	574	588	628	669	658	615	583
44	561	577	594	601	617	657	694	685	640	606
45	581	599	619	626	648	685	720	709	664	626
46	603	622	642	653	676	712	741	734	685	648
47	624	644	667	676	702	738	765	756	709	673
48	644	666	689	700	727	759	786	777	730	698
49	664	685	711	721	748	783	808	801	752	718
50	682	703	730	741	768	804	828	822	770	734
51	702	723	748	761	788	826	849	844	790	750

Time (min)	TC #122 (°F)	TC #123 (°F)	TC #124 (°F)	TC #125 (°F)	TC #126 (°F)	TC #127 (°F)	TC #128 (°F)	TC #129 (°F)	TC #130 (°F)	TC #131 (°F)
52	718	739	766	779	808	847	871	867	808	766
53	736	757	786	799	828	871	901	900	828	781
54	752	775	806	819	851	900	936	925	847	797
55	770	793	824	840	878	934	961	950	869	815
56	786	811	846	865	914	950	968	966	898	833
57	802	828	867	894	943	961	973	973	927	855
58	815	844	892	918	955	970	981	979	946	880
59	831	862	919	932	957	981	990	984	957	903
60	847	882	936	941	963	991	1002	993	961	921
Max Temp:	847	882	936	941	963	991	1002	993	961	921
Max Allowed:	397	397	397	397	397	398	398	398	398	397

Time (min)	TC #132 (°F)	TC #133 (°F)	TC #134 (°F)	TC #135 (°F)	TC #136 (°F)	TC #137 (°F)	TC #138 (°F)	TC #139 (°F)	TC #140 (°F)	TC #141 (°F)
0	72	72	72	72	72	72	73	73	73	72
1	73	73	73	73	75	77	77	73	73	72
2	73	75	75	77	79	81	82	73	73	73
3	77	77	79	82	82	82	84	73	77	79
4	81	81	82	84	84	84	84	73	81	82
5	82	82	84	86	84	84	84	75	82	86
6	84	84	86	88	84	84	84	75	82	88
7	86	84	86	88	86	84	86	75	84	90
8	86	86	86	90	86	86	86	75	84	90
9	88	88	90	90	88	86	88	75	84	91
10	91	90	91	93	90	90	90	75	86	95
11	93	93	95	97	93	93	93	75	86	97
12	97	97	99	100	99	97	95	75	88	100
13	100	100	102	106	102	100	99	75	90	104
14	104	104	108	111	106	104	102	75	90	108
15	108	108	111	115	111	108	106	75	91	111
16	113	113	117	120	117	113	109	75	93	115
17	118	120	122	124	122	118	113	75	95	120
18	126	126	129	127	127	124	115	75	97	124
19	133	135	136	131	135	129	118	75	100	126
20	144	144	144	136	140	136	120	77	102	129
21	153	154	153	140	149	144	124	77	104	133
22	165	165	162	147	158	153	129	77	108	136
23	178	176	172	156	167	162	136	77	109	142
24	192	190	185	169	178	172	149	79	111	145
25	208	205	199	183	190	183	160	79	115	149
26	225	221	214	196	205	196	169	79	117	154
27	243	237	228	210	217	208	180	81	118	160
28	261	253	244	226	232	223	190	81	120	163
29	279	270	261	243	248	235	203	81	124	169
30	297	288	279	262	262	250	214	81	126	174
31	315	304	295	282	279	264	225	82	127	180
32	331	322	313	302	295	279	237	82	131	187
33	349	340	333	322	311	293	248	84	133	192
34	367	358	351	342	327	307	259	84	136	199
35	385	376	370	361	343	322	271	86	140	207
36	403	394	390	381	361	338	284	86	144	216
37	421	412	408	401	378	352	297	88	147	225
38	441	432	428	419	396	369	309	90	153	234
39	460	450	448	439	412	383	320	91	158	244
40	480	469	468	459	430	399	333	91	162	255
41	500	489	489	478	448	415	345	99	180	277
42	522	511	511	496	466	433	360	109	201	320
43	541	532	532	518	484	450	374	104	196	318
44	561	554	550	538	504	468	387	129	221	345
45	583	574	570	558	522	484	399	149	217	345
46	612	594	590	576	540	500	414	118	219	356
47	644	613	610	597	558	516	428	111	223	367
48	666	637	631	617	574	532	441	111	228	378
49	684	660	653	639	594	549	455	113	234	387
50	698	682	675	658	613	565	469	115	237	396
51	712	700	693	678	633	583	484	115	243	406

Time (min)	TC #132 (°F)	TC #133 (°F)	TC #134 (°F)	TC #135 (°F)	TC #136 (°F)	TC #137 (°F)	TC #138 (°F)	TC #139 (°F)	TC #140 (°F)	TC #141 (°F)
52	727	716	709	696	651	599	498	117	246	414
53	741	732	725	712	669	615	513	118	252	424
54	754	745	739	729	685	631	525	118	255	432
55	766	759	754	743	702	648	540	120	261	441
56	781	774	766	756	714	662	554	122	266	450
57	797	788	781	766	725	675	567	124	270	457
58	813	802	793	779	736	685	577	126	275	466
59	829	817	808	792	747	696	590	126	279	475
60	847	831	820	804	759	707	601	127	284	482
Max Temp:	847	831	820	804	759	707	601	149	284	482
Max Allowed:	397	397	397	397	397	397	398	398	398	397

Time (min)	TC #142 (°F)	TC #143 (°F)	TC #144 (°F)	TC #145 (°F)	TC #146 (°F)	TC #147 (°F)	TC #148 (°F)	TC #149 (°F)	TC #150 (°F)
0	72	72	72	72	72	72	72	73	73
1	72	72	72	72	72	72	72	73	77
2	73	73	75	73	73	73	73	73	77
3	75	75	81	79	77	75	75	75	77
4	79	79	86	84	82	77	79	79	79
5	82	81	90	88	86	79	82	82	81
6	84	82	93	91	90	81	84	86	84
7	86	84	95	95	93	82	86	88	86
8	88	86	99	97	95	86	88	90	90
9	90	90	100	100	97	88	90	93	93
10	93	91	104	102	100	90	93	95	97
11	95	95	109	108	104	93	97	99	100
12	99	99	115	111	108	97	100	100	104
13	100	102	118	117	111	100	104	104	108
14	106	108	126	122	117	104	108	109	113
15	109	111	131	127	122	108	113	113	117
16	113	117	136	135	129	113	118	118	122
17	117	122	144	140	135	118	122	124	127
18	122	127	149	147	140	124	127	129	133
19	126	133	154	153	147	129	133	135	138
20	129	138	160	158	153	135	138	140	142
21	133	144	165	163	158	142	144	145	147
22	136	147	169	167	162	147	147	153	151
23	140	153	174	172	167	153	153	158	156
24	145	156	180	178	171	158	158	165	160
25	151	160	185	183	176	162	165	171	162
26	154	163	192	190	183	167	171	180	165
27	158	167	199	198	190	171	178	187	165
28	163	171	207	207	199	176	187	198	167
29	169	174	214	214	207	183	194	207	171
30	176	178	221	223	216	190	205	216	174
31	183	185	230	232	225	199	214	226	180
32	190	192	239	241	234	208	225	239	187
33	198	201	248	252	246	217	237	252	201
34	207	210	259	264	257	228	250	266	216
35	217	219	271	277	270	241	262	280	228
36	228	230	284	289	284	253	277	295	243
37	239	241	297	306	300	268	291	313	259
38	252	253	311	322	318	282	309	331	279
39	266	266	327	338	336	298	325	349	302
40	279	280	343	356	356	315	345	370	327
41	302	297	367	381	383	334	372	401	363
42	338	324	396	414	421	369	403	441	423
43	338	336	414	433	437	381	439	507	516
44	370	363	446	475	487	423	522	640	671
45	387	385	468	498	514	455	559	709	784
46	397	405	487	520	540	484	586	741	829
47	412	424	507	540	563	511	615	770	876
48	428	430	527	561	585	538	646	799	914
49	442	446	547	581	608	565	675	840	950
50	457	464	565	599	628	590	702	874	984
51	471	480	583	619	649	615	730	909	1015

Time (min)	TC #142 (°F)	TC #143 (°F)	TC #144 (°F)	TC #145 (°F)	TC #146 (°F)	TC #147 (°F)	TC #148 (°F)	TC #149 (°F)	TC #150 (°F)
52	486	496	599	635	669	642	759	939	1040
53	500	514	617	653	689	667	786	970	1062
54	514	529	633	671	709	693	819	995	1083
55	529	545	651	687	729	718	847	1018	1105
56	541	561	667	705	748	741	876	1042	1125
57	552	576	684	723	766	766	903	1062	1144
58	563	592	700	739	783	790	928	1080	1164
59	574	606	716	754	801	817	950	1098	1182
60	583	621	730	768	822	842	972	1116	1200
Max Temp:	583	621	730	768	822	842	972	1116	1200
Max Allowed:	397	397	397	397	397	397	397	398	398

Time (min)	TC #151 (°F)	TC #152 (°F)	TC #153 (°F)	TC #154 (°F)	TC #155 (°F)	TC #156 (°F)	TC #157 (°F)	TC #158 (°F)	TC #159 (°F)	TC #160 (°F)
0	72	72	72	72	72	72	72	73	73	73
1	73	72	72	72	72	72	73	73	75	77
2	73	73	73	73	72	73	75	79	81	82
3	77	77	77	75	73	77	79	82	82	86
4	82	82	82	79	75	81	84	86	82	88
5	86	86	86	82	77	82	86	88	82	90
6	90	90	90	84	79	86	90	90	82	91
7	93	93	93	86	79	86	93	93	84	93
8	97	97	97	88	81	90	95	95	86	95
9	99	100	99	90	82	91	97	97	88	97
10	104	104	104	91	84	93	100	99	90	99
11	109	109	108	95	86	95	104	100	91	100
12	115	115	111	97	88	99	108	104	93	104
13	118	118	117	100	91	102	111	108	95	108
14	126	124	122	104	95	106	115	111	99	111
15	131	129	126	108	97	111	120	115	100	115
16	136	136	133	113	102	115	126	118	104	120
17	144	142	136	117	106	120	131	122	106	124
18	149	147	144	122	111	126	136	127	109	129
19	154	153	147	127	115	131	140	131	113	133
20	158	156	153	131	120	136	145	136	117	138
21	163	162	158	136	126	142	149	142	120	142
22	167	167	163	142	129	147	154	145	124	147
23	171	171	169	147	135	153	158	151	126	151
24	176	176	174	153	140	156	162	154	129	156
25	181	185	183	156	144	162	167	160	133	162
26	187	192	192	162	149	165	172	165	135	167
27	194	201	201	169	154	169	181	171	138	174
28	207	212	212	174	158	176	190	176	140	181
29	217	223	223	181	162	185	199	183	144	189
30	228	234	232	189	167	194	208	190	149	198
31	239	244	243	199	171	201	216	198	153	205
32	252	257	255	210	176	212	226	207	160	212
33	266	271	270	221	183	223	237	217	167	221
34	280	288	284	235	190	235	252	228	176	232
35	297	304	302	252	199	248	266	241	185	243
36	315	320	320	268	210	264	282	255	198	255
37	334	340	342	286	221	280	300	273	212	270
38	356	361	363	306	234	298	320	291	230	284
39	379	383	387	325	248	320	342	309	252	302
40	403	408	412	345	262	340	363	333	275	320
41	437	442	450	381	279	378	406	376	322	358
42	505	514	534	493	316	514	532	489	417	430
43	622	678	739	613	338	570	586	552	477	471
44	788	768	786	624	370	604	635	595	523	509
45	882	799	799	642	401	631	671	631	581	536
46	918	842	817	664	430	657	702	666	651	561
47	919	869	840	689	460	684	732	700	716	588
48	930	891	860	716	489	711	761	734	768	613
49	950	914	882	745	518	738	788	768	811	640
50	972	937	905	774	549	766	822	802	853	667
51	993	961	930	806	579	795	867	844	889	694

Time (min)	TC #151 (°F)	TC #152 (°F)	TC #153 (°F)	TC #154 (°F)	TC #155 (°F)	TC #156 (°F)	TC #157 (°F)	TC #158 (°F)	TC #159 (°F)	TC #160 (°F)
52	1015	984	954	842	610	835	903	887	918	720
53	1035	1006	979	874	642	874	936	925	948	745
54	1054	1027	1000	905	675	909	966	959	977	774
55	1072	1047	1022	932	707	941	993	988	1004	804
56	1090	1067	1044	961	739	972	1015	1015	1029	846
57	1108	1087	1063	984	772	999	1036	1038	1054	885
58	1126	1105	1081	1008	804	1022	1056	1058	1076	919
59	1143	1121	1101	1029	837	1045	1076	1078	1098	950
60	1161	1137	1121	1049	867	1065	1090	1096	1116	975
Max Temp:	1161	1137	1121	1049	867	1065	1090	1096	1116	975
Max Allowed:	397	397	397	397	397	397	397	398	398	398

Time (min)	TC #161 (°F)	TC #162 (°F)	TC #163 (°F)	TC #164 (°F)	TC #165 (°F)	TC #166 (°F)	TC #167 (°F)	TC #168 (°F)	TC #169 (°F)	TC #170 (°F)
0	72	73	72	73	73	72	73	73	73	73
1	77	73	73	73	73	73	73	73	73	73
2	84	73	75	75	75	75	73	73	75	73
3	86	73	81	81	79	79	79	81	81	75
4	86	73	84	86	82	82	86	86	86	77
5	86	73	86	90	86	84	91	91	91	79
6	88	73	88	91	90	88	95	97	95	82
7	88	75	90	93	91	90	99	100	99	84
8	90	75	91	97	93	93	102	102	100	86
9	90	75	93	99	97	97	106	106	106	90
10	93	75	97	102	100	102	111	111	111	93
11	95	75	100	108	106	108	117	117	117	95
12	97	75	102	113	109	113	124	124	124	100
13	100	75	106	118	115	120	131	131	131	104
14	104	77	109	124	120	126	138	138	138	108
15	108	77	113	129	126	133	147	145	145	113
16	111	77	118	135	133	140	154	154	153	120
17	115	77	120	140	138	147	162	162	160	126
18	118	79	126	147	144	154	169	169	167	133
19	122	79	129	151	149	160	174	176	172	138
20	126	79	133	156	154	167	181	183	180	145
21	129	81	136	162	160	172	189	192	189	153
22	133	82	140	167	165	178	199	203	198	160
23	136	82	144	174	171	183	208	214	207	165
24	140	82	147	183	180	192	219	225	217	172
25	144	84	151	190	189	203	230	237	230	178
26	147	84	154	201	198	212	241	250	241	185
27	153	86	160	210	208	223	255	264	253	194
28	156	86	163	221	219	234	270	279	268	205
29	162	86	171	232	232	244	284	295	282	216
30	167	86	176	244	244	255	298	309	297	226
31	171	88	183	255	259	268	315	327	313	239
32	176	88	189	268	271	280	331	343	329	253
33	183	90	194	279	288	295	349	361	347	268
34	190	90	201	291	302	309	367	381	367	284
35	198	91	208	304	318	324	385	401	387	300
36	207	93	214	316	334	340	405	423	408	320
37	216	93	219	329	352	356	424	444	432	338
38	226	95	226	342	370	374	446	468	457	360
39	237	95	234	354	388	392	468	491	482	381
40	250	97	237	367	406	410	489	514	509	406
41	279	97	248	385	428	430	514	547	554	442
42	333	100	261	406	451	451	543	581	603	493
43	365	102	271	421	471	473	568	610	637	532
44	390	118	291	442	514	500	599	640	669	581
45	408	226	464	590	601	599	736	698	759	626
46	423	129	315	495	561	549	662	702	736	649
47	439	133	313	496	574	572	676	725	770	693
48	455	151	325	509	603	604	700	752	799	739
49	473	165	324	522	626	617	721	777	829	768
50	489	117	331	536	631	635	745	799	862	804
51	509	113	338	550	649	658	766	828	894	844

Time (min)	TC #161 (°F)	TC #162 (°F)	TC #163 (°F)	TC #164 (°F)	TC #165 (°F)	TC #166 (°F)	TC #167 (°F)	TC #168 (°F)	TC #169 (°F)	TC #170 (°F)
52	527	115	345	563	666	680	784	855	928	882
53	545	117	352	576	684	703	806	882	955	919
54	567	118	358	588	698	725	829	909	979	957
55	586	118	363	599	712	747	851	930	999	988
56	612	122	367	610	727	768	873	946	1013	1015
57	637	122	369	619	738	788	892	963	1027	1038
58	662	124	370	624	748	806	909	973	1040	1058
59	687	126	374	633	759	826	923	984	1051	1076
60	711	126	381	640	768	844	936	993	1060	1092
Max Temp:	711	226	464	640	768	844	936	993	1060	1092
Max Allowed:	397	398	397	398	398	397	398	398	398	398

Time (min)	TC #171 (°F)	TC #172 (°F)	TC #173 (°F)	TC #174 (°F)	TC #175 (°F)	TC #176 (°F)	TC #177 (°F)	TC #178 (°F)	TC #179 (°F)	TC #180 (°F)
0	72	72	72	72	72	72	72	72	72	73
1	72	72	73	73	72	72	72	72	73	73
2	73	73	73	75	73	73	73	73	73	75
3	75	79	75	81	77	79	75	75	79	82
4	79	82	77	88	82	86	79	77	82	88
5	82	86	81	93	88	90	82	79	86	93
6	86	90	86	97	93	95	84	81	90	97
7	88	91	90	100	97	99	88	82	91	100
8	91	93	93	104	100	102	90	84	93	104
9	93	97	97	109	104	106	91	86	95	108
10	97	100	100	115	108	111	95	90	99	113
11	100	104	106	122	113	115	99	91	104	118
12	104	109	111	127	118	122	102	97	108	126
13	111	115	117	135	126	127	108	100	113	133
14	115	120	122	140	131	133	111	104	118	138
15	120	127	127	145	136	138	117	109	126	145
16	127	133	133	153	144	145	122	115	131	153
17	133	140	138	158	151	153	127	120	138	158
18	140	147	144	165	156	158	133	126	144	163
19	147	154	149	171	163	165	140	133	149	169
20	154	160	154	176	169	171	145	138	156	174
21	162	167	162	180	174	176	151	144	162	181
22	169	172	167	187	181	185	158	151	169	192
23	178	180	171	201	187	198	163	156	176	205
24	187	190	174	216	199	208	169	162	187	216
25	198	201	180	230	216	221	176	167	196	230
26	208	212	185	246	232	235	187	174	207	244
27	221	226	194	264	248	252	199	181	219	261
28	235	239	205	284	268	270	210	189	232	279
29	250	255	223	304	288	289	223	198	246	298
30	266	271	243	325	309	309	237	208	261	316
31	282	291	262	347	331	331	252	217	275	334
32	298	311	284	372	356	352	266	228	291	354
33	316	333	309	397	381	378	282	239	307	374
34	336	356	338	424	408	401	298	250	325	396
35	358	381	369	451	437	428	318	262	345	417
36	379	408	401	478	466	457	336	275	365	439
37	405	437	437	509	495	484	358	289	385	460
38	432	468	477	538	525	514	378	304	408	486
39	462	502	518	568	556	543	399	318	432	509
40	493	536	559	601	588	574	421	334	455	536
41	574	622	655	691	680	644	469	354	498	574
42	655	712	738	741	725	691	505	378	543	621
43	700	770	793	779	761	727	540	403	592	675
44	754	858	912	883	880	867	658	433	667	730
45	835	943	1000	973	986	981	720	478	739	779
46	925	997	1051	1015	1015	999	747	525	781	824
47	948	1038	1087	1042	1033	1009	774	565	822	882
48	979	1069	1116	1067	1051	1024	806	601	867	928
49	1008	1092	1135	1089	1069	1038	838	639	905	966
50	1036	1116	1155	1107	1087	1056	873	678	945	997
51	1062	1135	1175	1123	1103	1074	907	721	984	1024

Time (min)	TC #171 (°F)	TC #172 (°F)	TC #173 (°F)	TC #174 (°F)	TC #175 (°F)	TC #176 (°F)	TC #177 (°F)	TC #178 (°F)	TC #179 (°F)	TC #180 (°F)
52	1083	1153	1191	1137	1117	1090	936	766	1017	1045
53	1103	1171	1206	1150	1132	1105	961	811	1042	1065
54	1119	1188	1220	1164	1144	1121	982	853	1060	1081
55	1135	1202	1234	1177	1157	1135	1006	889	1078	1098
56	1152	1216	1249	1189	1170	1152	1027	921	1092	1112
57	1166	1231	1263	1202	1180	1166	1051	950	1107	1126
58	1180	1245	1278	1216	1193	1180	1072	979	1123	1141
59	1195	1258	1290	1229	1206	1191	1094	1008	1135	1155
60	1207	1270	1303	1242	1216	1204	1114	1035	1152	1170
Max Temp:	1207	1270	1303	1242	1216	1204	1114	1035	1152	1170
Max Allowed:	397	397	397	397	397	397	397	397	397	398

Time (min)	TC #181 (°F)	TC #182 (°F)	TC #183 (°F)	TC #184 (°F)	TC #185 (°F)	TC #186 (°F)	TC #187 (°F)	TC #188 (°F)	TC #189 (°F)	TC #190 (°F)
0	73	73	72	72	73	73	73	73	73	73
1	73	84	79	79	73	73	73	73	73	73
2	77	95	91	90	73	73	73	73	73	73
3	86	88	93	90	73	75	75	77	75	75
4	90	88	93	90	73	77	79	81	81	81
5	95	90	95	88	73	81	82	86	86	84
6	99	91	97	88	75	82	86	91	90	88
7	102	93	97	88	75	84	90	93	93	91
8	106	93	97	90	75	86	91	97	97	95
9	109	95	97	90	77	86	93	99	99	97
10	115	97	99	90	77	88	95	100	100	99
11	120	99	102	91	77	90	97	102	104	100
12	126	102	104	93	77	90	99	104	106	104
13	133	106	108	97	77	91	100	108	109	108
14	140	109	113	99	77	91	102	111	113	111
15	145	113	117	102	79	93	104	115	118	115
16	153	118	122	108	79	95	108	118	122	120
17	158	124	127	111	79	99	111	122	127	126
18	163	129	133	115	81	100	115	127	133	129
19	169	136	138	118	81	104	120	133	140	136
20	172	140	144	122	82	109	127	140	147	144
21	178	145	151	127	82	115	133	151	156	153
22	185	149	158	133	84	118	140	160	169	162
23	196	153	165	136	86	122	149	171	180	172
24	207	156	176	144	86	127	156	181	190	183
25	217	160	189	149	88	133	167	194	203	194
26	230	165	207	156	90	138	176	208	216	207
27	246	171	226	163	90	145	187	223	230	219
28	264	181	250	174	91	153	199	241	246	235
29	282	199	279	187	93	160	214	259	266	252
30	304	223	313	207	95	169	228	280	286	270
31	324	244	347	223	97	178	246	302	306	289
32	343	270	378	237	99	189	264	325	329	309
33	361	293	405	248	100	199	284	351	352	331
34	381	322	426	257	104	212	306	374	376	354
35	401	354	448	266	106	226	327	399	399	378
36	423	390	471	277	109	241	347	423	424	401
37	444	428	493	288	113	255	370	446	450	426
38	469	469	514	298	115	273	392	469	475	451
39	495	511	538	307	118	289	415	493	498	477
40	522	558	563	318	122	306	437	518	523	502
41	559	612	594	342	127	342	468	567	559	549
42	612	673	630	383	147	437	550	653	660	640
43	671	741	673	426	295	585	707	743	804	756
44	730	808	720	471	518	572	725	849	810	804
45	779	882	765	505	171	504	644	759	777	768
46	826	952	808	538	165	464	658	766	786	784
47	887	1002	860	568	167	475	673	779	801	801
48	939	1040	905	599	169	482	687	792	813	819
49	981	1067	941	630	171	491	700	806	828	838
50	1015	1092	973	660	172	498	711	819	846	862
51	1040	1114	1000	691	172	505	720	828	860	887

Time (min)	TC #181 (°F)	TC #182 (°F)	TC #183 (°F)	TC #184 (°F)	TC #185 (°F)	TC #186 (°F)	TC #187 (°F)	TC #188 (°F)	TC #189 (°F)	TC #190 (°F)
52	1062	1134	1024	721	176	514	730	838	876	910
53	1080	1148	1042	752	180	522	741	851	894	934
54	1096	1162	1053	775	183	529	752	864	910	957
55	1112	1175	1065	795	185	536	765	874	921	963
56	1126	1188	1074	815	185	541	779	885	930	963
57	1141	1202	1087	835	187	550	792	892	932	961
58	1155	1213	1098	849	187	556	802	900	937	961
59	1168	1225	1110	864	189	561	813	907	941	963
60	1184	1240	1123	876	190	570	824	914	945	964
Max Temp:	1184	1240	1123	876	518	585	824	914	945	964
Max Allowed:	398	398	397	397	398	398	398	398	398	398

Time (min)	TC #191 (°F)	TC #192 (°F)	TC #193 (°F)	TC #194 (°F)	TC #195 (°F)	TC #196 (°F)	TC #197 (°F)	TC #198 (°F)	TC #199 (°F)	TC #200 (°F)
0	72	72	72	72	72	72	72	72	72	73
1	72	72	72	72	73	73	73	72	72	73
2	72	72	72	72	73	73	73	73	73	73
3	75	73	73	73	73	75	73	73	73	73
4	79	77	75	75	75	75	75	75	75	75
5	82	81	77	77	77	79	79	79	79	79
6	86	82	79	79	79	81	81	81	82	82
7	90	86	82	81	81	82	82	82	84	84
8	91	88	84	82	82	84	84	84	86	86
9	93	90	86	84	84	86	86	86	90	88
10	95	93	88	86	86	88	86	88	90	90
11	97	95	90	88	88	90	88	90	91	91
12	100	97	91	90	90	91	90	91	93	93
13	104	99	95	91	91	93	93	93	95	95
14	108	102	97	93	95	97	95	95	97	97
15	111	106	100	97	97	100	99	97	100	100
16	117	109	104	100	100	104	102	100	102	104
17	122	113	108	104	104	108	106	106	108	109
18	126	118	113	109	109	113	111	109	111	115
19	133	124	118	115	115	118	117	115	117	118
20	138	129	124	120	122	126	122	120	122	126
21	144	135	129	126	129	133	129	126	129	133
22	154	142	136	133	136	140	136	133	135	140
23	163	149	144	140	145	147	144	140	142	147
24	174	160	151	149	154	156	153	149	151	156
25	187	171	162	158	167	167	162	160	162	167
26	198	181	172	169	180	178	172	171	172	178
27	212	194	183	180	192	190	183	183	183	190
28	226	208	196	194	208	205	198	198	198	205
29	243	223	212	208	226	219	212	212	214	219
30	261	241	228	226	248	235	228	230	232	237
31	279	259	248	246	270	253	246	248	250	257
32	300	280	270	270	293	273	266	268	271	277
33	322	302	291	295	318	295	286	289	293	298
34	345	324	316	320	345	316	309	313	316	322
35	370	347	342	347	374	342	333	336	342	345
36	394	372	367	376	405	369	360	363	367	369
37	419	396	394	406	439	399	388	390	392	396
38	444	421	421	439	475	430	417	417	421	423
39	471	444	450	475	514	464	448	448	450	450
40	496	471	478	511	554	500	478	478	478	478
41	547	536	617	624	662	579	536	518	522	523
42	666	698	788	802	795	687	622	590	599	603
43	774	756	793	853	925	817	784	736	766	759
44	829	905	941	1045	1139	1134	1035	972	1022	963
45	799	824	883	1013	1139	1090	1047	1026	1047	1017
46	806	828	873	975	1087	1040	1004	1006	982	986
47	820	840	873	963	1069	1029	991	984	954	954
48	838	858	880	966	1074	1035	993	979	946	943
49	858	878	892	975	1085	1047	1002	986	950	948
50	878	898	909	991	1099	1062	1015	995	963	961
51	898	914	925	1011	1119	1080	1031	1009	977	975

Time (min)	TC #191 (°F)	TC #192 (°F)	TC #193 (°F)	TC #194 (°F)	TC #195 (°F)	TC #196 (°F)	TC #197 (°F)	TC #198 (°F)	TC #199 (°F)	TC #200 (°F)
52	916	928	939	1026	1137	1099	1047	1026	993	993
53	932	945	955	1044	1155	1117	1065	1042	1011	1011
54	945	954	972	1060	1175	1137	1085	1060	1031	1029
55	954	961	984	1076	1195	1157	1103	1078	1049	1047
56	957	968	997	1092	1213	1175	1121	1096	1067	1063
57	963	975	1011	1108	1231	1193	1139	1114	1083	1081
58	968	982	1024	1123	1247	1209	1155	1130	1099	1096
59	973	991	1036	1137	1261	1225	1173	1146	1117	1112
60	979	999	1049	1152	1278	1242	1189	1162	1135	1130
Max Temp:	979	999	1049	1152	1278	1242	1189	1162	1135	1130
Max Allowed:	397	397	397	397	397	397	397	397	397	398

Time (min)	TC #201 (°F)	TC #202 (°F)	TC #203 (°F)	TC #204 (°F)	TC #205 (°F)	TC #206 (°F)	TC #207 (°F)	TC #208 (°F)	TC #209 (°F)	TC #210 (°F)
0	72	72	72	72	73	73	73	73	73	73
1	72	72	72	77	100	111	81	73	75	75
2	72	72	75	86	108	115	91	75	79	79
3	75	75	77	86	99	106	93	73	79	81
4	79	79	81	86	95	100	91	75	81	82
5	82	82	84	88	93	99	90	75	82	84
6	86	86	86	90	93	99	90	75	84	86
7	90	90	88	90	93	97	90	75	86	88
8	91	91	88	91	93	97	90	75	86	90
9	93	93	90	93	95	97	90	75	90	93
10	95	95	91	93	95	97	90	75	91	95
11	97	97	93	95	95	99	90	75	95	100
12	100	99	95	97	97	99	91	77	99	104
13	104	100	97	97	99	100	91	77	104	108
14	108	104	100	100	100	100	91	77	109	113
15	111	106	102	102	100	102	93	79	115	118
16	118	111	106	104	104	104	95	79	118	124
17	122	115	109	108	108	108	97	81	124	131
18	129	118	113	111	111	111	99	81	129	138
19	135	122	117	117	117	117	100	82	133	145
20	142	127	122	120	122	120	102	82	136	154
21	149	133	127	124	126	126	106	82	138	163
22	158	140	133	129	131	129	108	84	144	176
23	169	151	140	133	136	135	111	84	154	192
24	180	160	147	138	142	138	115	84	165	210
25	192	171	158	147	149	142	117	84	178	228
26	205	181	167	158	158	147	120	84	190	248
27	221	194	180	169	169	154	122	86	201	268
28	237	210	194	180	180	165	127	86	214	286
29	255	226	208	194	192	178	133	88	226	306
30	275	244	226	210	208	190	136	90	239	325
31	295	264	248	228	226	207	144	90	253	345
32	315	284	270	248	248	225	153	91	266	363
33	336	306	291	271	273	246	163	93	280	385
34	358	327	316	298	302	268	172	95	295	405
35	381	351	340	327	334	293	185	97	311	426
36	405	376	369	363	370	316	198	99	327	448
37	428	403	399	406	414	343	212	100	343	469
38	455	430	432	455	464	376	230	102	360	489
39	482	460	468	511	522	417	252	106	376	511
40	511	491	507	570	585	468	282	108	392	529
41	556	538	612	727	817	576	333	109	410	547
42	615	615	766	932	1031	768	439	111	426	567
43	781	797	999	1083	1121	918	549	115	441	585
44	934	939	1036	1107	1094	1008	637	115	455	604
45	968	1013	1026	1081	1074	1015	694	118	469	622
46	999	1022	1000	1065	1069	1004	734	120	484	637
47	1002	1002	991	1065	1072	997	763	124	498	655
48	999	990	995	1078	1087	1006	784	129	511	673
49	999	993	1006	1094	1107	1022	810	129	523	687
50	1006	1004	1022	1112	1126	1035	828	129	536	703
51	1017	1018	1040	1132	1146	1045	842	129	547	718

Time (min)	TC #201 (°F)	TC #202 (°F)	TC #203 (°F)	TC #204 (°F)	TC #205 (°F)	TC #206 (°F)	TC #207 (°F)	TC #208 (°F)	TC #209 (°F)	TC #210 (°F)
52	1031	1033	1058	1152	1170	1062	851	131	558	732
53	1045	1049	1076	1173	1191	1080	858	133	570	747
54	1060	1065	1094	1193	1216	1098	867	135	583	761
55	1076	1081	1110	1213	1240	1119	880	140	595	774
56	1090	1098	1126	1231	1263	1139	896	140	608	788
57	1105	1112	1144	1247	1281	1155	912	140	619	804
58	1119	1128	1159	1263	1299	1170	927	142	630	820
59	1135	1143	1175	1279	1317	1184	945	144	640	838
60	1150	1159	1191	1294	1330	1197	968	145	651	853
Max Temp:	1150	1159	1191	1294	1330	1197	968	145	651	853
Max Allowed:	397	397	397	397	398	398	398	398	398	398

Time (min)	TC #211 (°F)	TC #212 (°F)	TC #213 (°F)	TC #214 (°F)	TC #215 (°F)	TC #216 (°F)	TC #217 (°F)	TC #218 (°F)	TC #219 (°F)	TC #220 (°F)
0	72	72	72	72	72	72	72	72	72	73
1	73	72	72	72	72	72	72	73	73	73
2	75	73	73	73	73	72	73	73	73	73
3	77	73	75	75	75	73	75	75	75	75
4	81	77	79	79	79	75	79	81	81	79
5	84	79	82	82	82	77	82	84	84	82
6	86	81	84	86	86	81	84	88	88	86
7	88	84	86	88	88	82	88	91	91	90
8	90	86	88	90	90	86	90	93	93	93
9	91	88	91	93	93	88	93	97	97	95
10	95	91	95	97	99	93	99	102	102	100
11	99	93	99	100	102	97	104	108	106	104
12	102	99	104	106	108	102	109	113	111	109
13	108	102	108	111	113	108	115	118	118	117
14	111	108	113	117	118	113	122	124	124	122
15	117	113	118	122	124	120	127	131	131	129
16	122	118	124	127	129	126	133	136	136	136
17	127	124	129	133	135	133	138	140	142	142
18	133	127	135	136	142	136	142	145	145	145
19	140	131	142	144	149	140	144	149	149	149
20	149	133	149	151	160	142	151	158	156	153
21	160	140	160	162	174	144	162	171	165	154
22	172	147	172	176	189	151	172	185	176	165
23	187	158	187	192	207	163	187	201	190	174
24	205	169	203	210	226	176	205	219	207	187
25	223	183	221	228	248	192	223	239	223	203
26	243	199	241	250	271	208	243	261	243	221
27	264	216	261	271	297	226	264	284	264	241
28	284	234	282	293	322	246	286	307	286	261
29	306	253	304	316	349	266	309	333	309	284
30	327	273	325	338	374	288	334	358	334	307
31	351	293	349	363	403	309	360	385	360	331
32	372	315	374	388	430	333	387	414	388	358
33	396	338	397	414	457	358	414	442	417	387
34	419	360	424	439	486	383	442	473	448	417
35	442	385	450	466	513	410	471	504	478	451
36	466	408	477	493	540	437	502	536	511	486
37	489	433	502	520	567	464	532	568	543	523
38	513	460	529	547	595	493	563	601	576	561
39	536	486	554	574	624	522	595	635	612	599
40	559	511	581	601	651	550	630	669	648	637
41	581	536	606	628	678	579	662	700	682	676
42	604	561	633	655	702	610	691	730	716	712
43	628	586	657	678	725	640	721	759	747	748
44	649	610	680	702	747	671	750	786	777	781
45	671	637	703	725	768	703	779	813	806	808
46	691	666	723	747	786	736	806	855	853	865
47	711	691	745	766	808	766	844	885	892	901
48	730	718	765	786	831	792	873	912	921	928
49	750	743	783	804	855	826	900	937	943	950
50	766	765	799	828	878	855	923	957	963	968
51	783	784	822	849	907	882	945	975	981	986

Time (min)	TC #211 (°F)	TC #212 (°F)	TC #213 (°F)	TC #214 (°F)	TC #215 (°F)	TC #216 (°F)	TC #217 (°F)	TC #218 (°F)	TC #219 (°F)	TC #220 (°F)
52	801	810	842	871	928	909	964	993	999	1002
53	820	831	862	900	946	932	982	1009	1017	1018
54	842	851	889	927	963	952	999	1026	1033	1035
55	858	871	918	946	977	972	1015	1042	1047	1049
56	874	891	936	961	986	988	1031	1056	1062	1063
57	889	909	950	975	997	1004	1045	1069	1076	1078
58	901	925	964	988	1009	1018	1060	1083	1089	1090
59	916	939	977	1000	1022	1033	1072	1096	1101	1105
60	927	952	988	1013	1035	1047	1087	1108	1114	1116
Max Temp:	927	952	988	1013	1035	1047	1087	1108	1114	1116
Max Allowed:	397	397	397	397	397	397	397	397	397	398

Time (min)	TC #221 (°F)	TC #222 (°F)	TC #223 (°F)	TC #224 (°F)	TC #225 (°F)	TC #226 (°F)	TC #227 (°F)	TC #228 (°F)	TC #229 (°F)	TC #230 (°F)
0	72	72	72	72	72	72	72	72	72	73
1	72	72	72	72	75	77	79	91	79	86
2	72	73	73	72	77	81	84	108	86	91
3	75	75	75	73	81	84	86	100	86	86
4	81	81	81	75	82	86	88	97	84	84
5	84	86	82	77	86	86	88	95	84	82
6	88	90	86	79	86	88	90	95	84	82
7	90	93	88	81	88	90	90	93	84	82
8	93	95	90	82	88	90	91	93	84	82
9	97	99	93	84	91	93	93	93	86	82
10	100	102	97	86	93	95	95	95	88	84
11	106	108	100	88	97	97	97	97	90	86
12	111	113	106	91	99	100	100	99	91	88
13	117	118	111	95	104	104	104	100	93	93
14	122	126	118	99	108	109	109	104	99	97
15	129	131	126	104	113	113	115	109	102	100
16	135	136	133	108	118	118	120	113	108	106
17	140	142	138	115	124	124	126	118	113	111
18	145	145	144	118	129	129	129	122	117	111
19	149	149	149	124	135	136	135	127	122	117
20	149	154	151	129	142	142	140	131	126	120
21	156	165	154	133	149	151	147	136	131	126
22	167	180	162	135	162	162	158	142	136	127
23	178	194	169	136	172	174	169	147	142	127
24	194	212	185	140	185	187	180	154	149	129
25	212	232	203	147	201	201	192	163	158	133
26	234	253	221	156	217	217	207	176	169	144
27	255	277	241	167	234	234	221	190	178	153
28	279	302	261	180	253	252	237	205	189	162
29	304	327	282	192	273	270	255	219	201	172
30	329	356	304	207	295	291	273	234	214	185
31	358	383	325	223	316	311	293	250	226	198
32	387	412	349	239	338	333	313	268	241	207
33	417	442	370	255	360	354	333	286	257	219
34	448	471	396	273	383	378	354	306	273	234
35	480	502	419	291	406	401	376	327	289	248
36	513	532	444	311	428	424	397	349	306	261
37	545	563	469	331	453	448	421	374	324	275
38	579	594	496	352	478	473	444	397	343	289
39	615	626	523	374	504	498	469	423	363	306
40	649	658	550	397	529	522	493	448	381	320
41	684	689	579	421	554	547	518	471	401	336
42	716	720	606	444	579	572	543	496	421	351
43	748	748	635	468	606	599	567	522	441	365
44	779	775	662	493	631	624	594	547	460	378
45	804	799	689	516	658	651	619	572	478	392
46	846	835	714	541	682	675	644	597	496	408
47	880	867	739	567	707	700	669	622	516	424
48	909	894	765	592	730	721	694	648	534	441
49	934	919	793	619	754	743	716	673	552	455
50	954	941	824	646	775	765	738	696	570	471
51	973	959	855	673	797	784	759	718	588	486

Time (min)	TC #221 (°F)	TC #222 (°F)	TC #223 (°F)	TC #224 (°F)	TC #225 (°F)	TC #226 (°F)	TC #227 (°F)	TC #228 (°F)	TC #229 (°F)	TC #230 (°F)
52	990	977	882	700	828	806	779	739	606	498
53	1008	995	907	725	856	838	797	761	622	514
54	1024	1009	928	752	885	864	826	779	640	527
55	1038	1026	946	777	907	887	855	799	658	541
56	1053	1040	964	804	925	905	876	828	673	554
57	1065	1053	981	831	941	919	898	851	689	567
58	1080	1065	997	858	955	932	914	876	705	577
59	1090	1080	1011	882	968	946	928	898	720	588
60	1105	1090	1026	903	979	959	939	912	734	599
Max Temp:	1105	1090	1026	903	979	959	939	912	734	599
Max Allowed:	397	397	397	397	397	397	397	397	397	398

Time (min)	TC #231 (°F)	TC #232 (°F)	TC #233 (°F)	TC #234 (°F)	TC #235 (°F)	TC #236 (°F)	TC #237 (°F)	TC #238 (°F)	TC #239 (°F)	TC #240 (°F)
0	72	72	72	72	72	72	72	72	72	73
1	73	73	73	73	72	72	72	73	72	73
2	73	77	77	75	73	73	73	73	73	73
3	73	79	79	77	73	75	75	75	73	75
4	73	81	81	79	75	79	79	79	75	79
5	73	82	84	81	79	81	82	82	79	82
6	75	84	86	84	81	82	84	84	81	86
7	75	84	88	86	82	84	86	88	84	90
8	75	86	88	88	84	88	90	90	86	91
9	75	88	91	90	86	90	91	91	90	95
10	75	90	93	91	88	93	95	95	91	99
11	75	93	97	95	91	95	99	99	95	102
12	77	97	100	100	95	100	102	104	100	108
13	77	100	106	104	99	104	108	109	104	113
14	77	106	111	109	104	109	113	115	111	120
15	79	111	117	117	109	117	118	120	117	126
16	79	115	122	122	115	122	124	126	124	133
17	81	120	127	127	120	127	129	131	131	140
18	81	124	131	133	126	133	135	136	136	144
19	82	127	133	136	131	138	138	142	142	147
20	84	129	135	138	135	140	142	144	145	149
21	84	129	138	140	138	145	151	151	147	153
22	84	129	144	144	140	153	162	162	151	162
23	86	129	158	158	144	162	174	172	153	174
24	86	131	171	171	151	176	187	185	154	187
25	86	133	185	187	160	192	203	201	165	201
26	86	140	201	205	172	210	223	219	178	219
27	86	153	219	225	187	228	243	239	194	239
28	88	165	239	244	203	248	262	259	210	261
29	90	176	257	264	216	271	286	280	228	284
30	90	189	275	286	235	293	309	304	248	309
31	91	199	293	306	255	316	334	327	270	333
32	93	210	309	327	277	340	358	352	291	360
33	95	221	329	349	298	363	383	376	315	387
34	97	234	345	370	320	387	408	401	340	415
35	99	244	363	392	342	412	433	428	365	444
36	100	257	381	414	363	435	459	453	392	473
37	104	270	399	435	387	460	484	480	421	504
38	106	284	419	459	410	484	509	507	448	534
39	108	297	439	478	433	507	532	532	477	567
40	109	309	460	500	457	529	556	559	505	599
41	111	324	482	520	480	550	579	586	536	631
42	115	338	502	540	504	572	603	613	565	664
43	117	351	520	559	525	594	628	640	595	694
44	118	367	540	581	547	617	651	666	624	723
45	122	383	559	603	570	640	675	691	657	752
46	124	399	583	624	594	662	694	716	689	781
47	127	414	604	646	617	685	716	739	723	813
48	136	432	626	667	642	707	736	761	756	851
49	138	448	649	689	667	727	754	781	786	880
50	136	464	671	709	691	747	772	801	813	907
51	136	475	691	729	714	766	786	824	842	928

Time (min)	TC #231 (°F)	TC #232 (°F)	TC #233 (°F)	TC #234 (°F)	TC #235 (°F)	TC #236 (°F)	TC #237 (°F)	TC #238 (°F)	TC #239 (°F)	TC #240 (°F)
52	136	486	711	747	736	783	808	844	869	948
53	140	496	727	765	756	802	828	867	896	968
54	142	513	743	781	775	824	846	892	921	984
55	144	523	759	799	799	844	862	918	941	1000
56	145	534	772	819	820	862	891	936	961	1017
57	147	543	786	838	838	889	914	950	977	1031
58	151	552	802	853	858	914	930	964	993	1045
59	151	563	819	869	878	930	943	977	1009	1060
60	153	574	833	882	900	945	957	990	1022	1072
Max Temp:	153	574	833	882	900	945	957	990	1022	1072
Max Allowed:	397	397	397	397	397	397	397	397	397	398

Time (min)	TC #241 (°F)	TC #242 (°F)	TC #243 (°F)	TC #244 (°F)	TC #245 (°F)	TC #246 (°F)	TC #247 (°F)	TC #248 (°F)	TC #249 (°F)	TC #250 (°F)
0	73	73	73	73	73	72	72	73	73	75
1	73	75	73	73	73	73	73	75	77	82
2	73	75	73	73	73	73	73	77	82	86
3	77	77	75	77	77	77	75	82	86	90
4	81	81	79	81	81	79	75	84	86	90
5	84	84	82	84	86	82	79	86	88	90
6	88	88	86	88	90	86	79	88	90	90
7	90	91	90	91	91	88	81	88	90	91
8	93	93	93	93	93	90	82	90	91	91
9	97	97	97	97	97	91	84	91	93	93
10	100	100	100	100	100	95	86	93	95	95
11	104	106	104	104	104	99	90	97	97	97
12	109	109	109	109	109	102	93	100	100	100
13	115	115	115	117	115	108	97	104	106	106
14	120	122	122	122	120	113	100	108	109	109
15	127	127	129	129	127	118	104	113	113	113
16	133	135	135	135	135	126	111	118	118	118
17	140	140	142	142	140	133	113	124	124	122
18	144	145	145	147	145	138	118	131	129	129
19	147	151	149	153	149	144	126	136	136	135
20	151	154	154	156	154	147	133	140	140	140
21	162	158	156	160	158	149	138	144	145	145
22	172	165	156	163	165	149	142	151	153	153
23	187	178	163	167	176	153	145	160	163	160
24	203	194	174	181	190	165	149	171	176	172
25	221	212	187	198	207	178	153	183	189	185
26	241	230	205	217	225	192	158	198	203	199
27	264	252	226	237	244	207	163	214	217	214
28	288	273	248	259	266	225	172	230	234	230
29	315	297	270	282	288	241	183	248	252	246
30	342	320	293	307	313	261	194	266	270	264
31	369	343	318	334	336	280	207	286	288	282
32	397	370	343	361	361	300	219	306	307	302
33	426	397	369	392	388	322	235	325	329	322
34	453	424	396	421	417	345	252	347	351	343
35	484	453	426	451	446	367	268	370	374	365
36	514	484	455	482	475	392	286	392	397	388
37	545	514	487	514	507	419	304	417	421	410
38	576	547	522	547	538	446	324	442	446	435
39	608	579	556	583	570	475	343	468	471	459
40	639	612	592	617	604	504	363	493	496	482
41	669	646	630	653	637	532	385	518	522	507
42	700	680	666	687	671	563	406	543	547	531
43	729	712	702	720	702	592	430	568	572	554
44	754	745	736	750	732	622	453	595	597	579
45	783	775	770	781	761	651	477	622	624	604
46	810	815	804	806	788	680	502	649	649	630
47	858	882	871	847	817	707	525	676	675	655
48	891	909	903	880	858	732	550	702	696	678
49	918	930	927	909	889	759	577	727	720	702
50	941	946	946	934	914	792	603	750	741	721
51	961	963	964	954	937	824	630	772	761	743

Time (min)	TC #241 (°F)	TC #242 (°F)	TC #243 (°F)	TC #244 (°F)	TC #245 (°F)	TC #246 (°F)	TC #247 (°F)	TC #248 (°F)	TC #249 (°F)	TC #250 (°F)
52	979	979	981	973	957	855	655	792	781	761
53	993	997	999	991	975	882	682	819	799	781
54	1006	1013	1015	1008	993	907	709	851	829	799
55	1020	1029	1031	1024	1009	928	734	873	856	824
56	1035	1044	1045	1038	1026	946	761	892	876	847
57	1049	1058	1060	1053	1040	964	786	910	894	865
58	1063	1072	1074	1067	1053	982	813	923	910	882
59	1076	1085	1087	1080	1067	999	838	936	923	896
60	1089	1098	1101	1092	1080	1015	864	948	937	909
Max Temp:	1089	1098	1101	1092	1080	1015	864	948	937	909
Max Allowed:	398	398	398	398	398	397	397	398	398	400

Time (min)	TC #251 (°F)	TC #252 (°F)	TC #253 (°F)	TC #254 (°F)	TC #255 (°F)	TC #256 (°F)	TC #257 (°F)	TC #258 (°F)	TC #259 (°F)	TC #260 (°F)
0	72	72	72	73	73	72	72	73	73	73
1	97	77	79	73	77	73	73	73	73	73
2	104	84	86	75	82	79	77	79	75	75
3	95	86	86	75	82	82	84	84	81	81
4	90	84	84	77	84	86	90	90	84	84
5	88	86	84	77	86	90	93	95	88	86
6	86	86	86	79	90	93	95	97	91	90
7	88	86	86	79	90	95	97	99	93	91
8	88	88	86	81	91	97	100	102	95	93
9	90	90	88	81	95	99	104	106	99	97
10	91	91	90	82	97	104	109	111	104	100
11	93	93	93	82	100	108	115	117	108	104
12	97	97	97	84	104	113	120	122	113	109
13	100	100	100	86	109	118	126	129	118	115
14	104	104	102	88	115	124	133	136	126	120
15	108	108	108	90	120	129	138	144	133	126
16	111	113	111	91	126	135	145	151	140	133
17	117	117	117	93	131	140	154	162	151	142
18	124	124	124	95	133	145	165	176	162	151
19	127	129	127	97	136	153	176	190	174	162
20	133	133	133	99	140	163	189	205	187	176
21	133	135	133	100	153	181	207	221	203	190
22	138	138	135	104	167	201	226	243	223	208
23	145	145	136	108	183	223	252	266	244	228
24	156	156	140	113	199	246	279	295	271	252
25	169	167	151	118	219	271	307	324	298	279
26	181	180	162	126	235	298	336	352	327	307
27	196	192	172	131	253	324	365	383	354	336
28	210	205	183	136	271	351	396	412	383	365
29	225	217	196	144	291	376	424	441	412	394
30	241	232	208	151	309	403	451	469	439	424
31	257	246	221	156	329	430	480	496	466	451
32	273	262	234	163	349	457	507	523	493	480
33	291	279	248	169	369	482	532	549	520	507
34	311	297	262	176	388	509	558	576	545	534
35	331	315	277	183	408	534	585	601	572	561
36	352	331	291	189	428	561	612	626	599	588
37	374	349	306	196	450	586	637	651	626	615
38	396	369	320	203	471	612	662	676	651	642
39	421	387	336	208	493	637	685	700	678	669
40	444	405	351	217	514	662	709	723	703	694
41	468	424	367	226	538	685	732	747	727	720
42	491	444	385	234	561	709	752	766	750	741
43	514	462	399	243	577	730	772	788	770	765
44	538	480	417	250	597	750	795	808	792	784
45	561	498	432	255	615	770	819	828	811	806
46	583	514	444	262	633	788	840	846	829	826
47	606	532	460	268	651	808	856	865	847	844
48	628	549	475	273	666	826	874	916	871	864
49	651	565	489	280	685	844	894	925	896	891
50	673	581	500	286	702	860	907	930	918	918
51	694	597	514	293	716	876	921	936	932	934

Time (min)	TC #251 (°F)	TC #252 (°F)	TC #253 (°F)	TC #254 (°F)	TC #255 (°F)	TC #256 (°F)	TC #257 (°F)	TC #258 (°F)	TC #259 (°F)	TC #260 (°F)
52	712	612	527	302	732	892	934	945	941	943
53	732	626	538	307	747	905	943	955	952	952
54	750	642	550	309	761	914	952	964	963	963
55	766	655	558	313	775	925	959	975	973	975
56	784	666	572	316	784	934	970	986	986	986
57	808	680	594	322	797	945	979	997	999	1000
58	833	694	617	325	808	955	990	1008	1009	1011
59	853	709	635	329	820	966	1000	1018	1020	1026
60	869	721	653	333	831	977	1009	1029	1033	1036
Max Temp:	869	721	653	333	831	977	1009	1029	1033	1036
Max Allowed:	397	397	397	398	398	397	397	398	398	398

Time (min)	TC #261 (°F)	TC #262 (°F)	TC #263 (°F)	TC #264 (°F)	TC #265 (°F)	TC #266 (°F)	TC #267 (°F)	TC #268 (°F)	TC #269 (°F)	TC #270 (°F)
0	72	72	72	72	73	73	73	73	73	73
1	72	72	73	73	73	73	73	73	73	73
2	73	73	73	73	73	73	73	75	75	75
3	77	77	77	77	75	77	77	79	79	79
4	81	81	82	81	79	81	82	82	82	84
5	84	84	86	84	82	84	86	86	88	88
6	86	86	88	86	86	88	90	90	90	91
7	90	90	90	90	90	90	91	91	91	93
8	91	91	91	91	91	93	93	93	93	95
9	93	93	95	95	95	99	97	97	97	97
10	97	97	99	99	100	100	100	100	100	100
11	102	102	102	104	104	106	104	104	104	106
12	108	108	108	108	109	111	109	109	108	109
13	111	111	113	113	115	117	115	113	111	115
14	118	118	118	118	122	122	118	118	117	118
15	124	124	126	124	127	129	124	124	122	124
16	129	129	131	129	135	135	129	131	127	131
17	136	138	138	136	140	144	136	136	133	140
18	147	149	149	147	147	153	147	145	142	149
19	156	160	163	156	154	163	162	160	154	160
20	169	174	180	171	169	180	176	174	169	172
21	185	190	198	185	187	196	192	192	183	189
22	201	208	219	203	203	216	212	210	199	207
23	219	228	241	223	223	237	232	230	217	225
24	243	252	266	244	246	262	255	253	239	244
25	266	275	282	266	270	286	279	277	261	268
26	293	298	302	289	297	313	304	302	284	289
27	320	324	324	313	324	340	329	327	307	313
28	347	349	349	338	352	369	356	354	333	338
29	376	378	376	367	381	397	383	381	358	363
30	405	405	405	396	412	428	410	408	385	388
31	433	432	432	424	442	457	439	435	410	414
32	462	460	462	455	475	487	468	462	437	441
33	491	489	493	486	507	518	496	489	464	468
34	518	518	520	516	540	550	527	518	491	495
35	547	547	549	549	572	585	558	547	522	522
36	576	576	577	579	606	619	590	577	550	550
37	603	604	608	612	640	651	621	608	581	579
38	631	633	640	646	675	685	655	640	612	610
39	658	664	671	678	707	716	687	673	644	640
40	684	691	700	711	738	745	720	703	676	669
41	711	718	729	739	765	774	748	734	705	696
42	734	743	756	766	790	801	775	761	730	721
43	756	766	781	793	815	826	802	784	756	747
44	779	790	806	819	840	849	828	811	779	768
45	801	813	829	844	865	873	853	835	799	790
46	820	835	853	869	896	903	878	864	824	811
47	840	858	880	903	936	936	912	887	846	835
48	862	883	912	946	961	957	950	925	869	860
49	885	914	946	968	970	972	970	954	900	889
50	914	937	961	968	975	982	973	970	937	921
51	936	950	966	972	986	993	981	979	957	968

Time (min)	TC #261 (°F)	TC #262 (°F)	TC #263 (°F)	TC #264 (°F)	TC #265 (°F)	TC #266 (°F)	TC #267 (°F)	TC #268 (°F)	TC #269 (°F)	TC #270 (°F)
52	945	961	972	981	999	1008	991	984	959	1004
53	954	970	982	993	1013	1022	1006	991	963	1011
54	964	982	995	1008	1027	1038	1020	1004	972	999
55	977	995	1009	1022	1044	1053	1035	1015	981	988
56	991	1008	1024	1036	1056	1065	1047	1029	991	988
57	1004	1022	1036	1049	1071	1080	1062	1042	1004	995
58	1017	1033	1047	1062	1083	1092	1072	1054	1015	1004
59	1031	1045	1060	1074	1096	1105	1085	1065	1026	1015
60	1042	1058	1072	1087	1108	1117	1098	1076	1036	1026
Max Temp:	1042	1058	1072	1087	1108	1117	1098	1076	1036	1026
Max Allowed:	397	397	397	397	398	398	398	398	398	398

Time (min)	TC #271 (°F)	TC #272 (°F)	TC #273 (°F)	TC #274 (°F)	TC #275 (°F)	TC #276 (°F)	TC #277 (°F)	TC #278 (°F)	TC #279 (°F)	TC #280 (°F)
0	72	72	72	73	73	73	72	73	73	73
1	75	79	79	79	84	79	72	73	73	73
2	81	84	84	86	91	86	73	73	73	73
3	82	86	88	90	91	88	77	77	75	77
4	86	88	88	90	93	90	81	81	77	81
5	88	90	90	91	93	90	86	86	79	84
6	91	91	91	93	95	91	90	90	82	88
7	93	93	93	95	97	91	95	93	86	90
8	95	93	95	97	99	93	99	97	88	93
9	99	97	97	99	100	93	100	100	91	97
10	102	100	100	100	102	95	106	106	97	100
11	106	104	104	104	108	99	111	111	100	104
12	109	108	108	108	111	100	117	117	106	109
13	115	113	111	113	117	104	124	124	111	117
14	118	117	117	118	122	106	131	131	118	122
15	124	122	122	124	127	111	138	138	126	131
16	129	127	127	129	133	115	147	147	133	144
17	136	133	133	133	136	120	154	154	142	160
18	145	136	136	140	140	120	163	162	149	172
19	154	142	142	144	145	122	171	169	162	185
20	165	151	147	151	147	122	178	176	171	198
21	181	163	156	158	151	126	187	187	178	210
22	198	178	171	171	163	126	199	198	183	219
23	216	192	187	187	180	129	210	210	190	228
24	235	208	207	205	196	136	225	221	198	234
25	257	226	225	225	212	147	237	234	205	243
26	280	246	244	244	230	156	253	248	214	253
27	306	266	266	266	250	167	273	262	223	266
28	329	288	288	288	268	178	295	280	234	279
29	356	311	309	309	288	190	318	300	248	293
30	383	334	331	331	306	201	342	320	262	307
31	410	361	356	354	327	214	367	342	280	324
32	439	390	381	378	345	226	392	363	300	343
33	469	417	406	401	367	241	417	387	322	363
34	500	446	432	424	387	255	444	410	345	385
35	532	477	459	448	408	271	469	433	372	408
36	565	507	487	475	432	288	495	459	401	433
37	595	536	516	500	455	306	520	484	432	460
38	626	568	547	529	482	324	545	511	462	487
39	657	599	574	556	507	343	570	536	493	516
40	685	630	604	583	532	361	597	565	525	545
41	712	662	635	613	558	383	626	594	561	577
42	738	693	666	644	585	403	657	624	595	610
43	763	721	694	673	612	424	687	657	631	644
44	784	747	720	702	640	446	721	689	669	678
45	808	770	743	725	664	468	754	723	707	714
46	829	790	765	748	687	491	786	757	745	750
47	855	811	784	766	709	514	819	792	783	788
48	882	833	804	786	729	536	853	828	820	824
49	909	855	822	804	745	554	891	864	860	864
50	936	880	844	824	763	572	930	907	903	907
51	966	910	865	844	783	592	968	948	946	948

Time (min)	TC #271 (°F)	TC #272 (°F)	TC #273 (°F)	TC #274 (°F)	TC #275 (°F)	TC #276 (°F)	TC #277 (°F)	TC #278 (°F)	TC #279 (°F)	TC #280 (°F)
52	988	950	891	867	802	610	1006	990	990	991
53	993	970	923	892	822	628	1042	1029	1033	1035
54	990	970	941	921	842	646	1078	1069	1074	1074
55	990	964	945	950	865	664	1114	1107	1112	1114
56	995	968	950	968	892	680	1148	1143	1150	1152
57	1004	975	955	970	918	698	1182	1177	1184	1186
58	1013	986	964	964	925	716	1215	1209	1218	1220
59	1026	997	972	963	925	734	1243	1240	1251	1252
60	1036	1008	982	966	928	750	1272	1269	1281	1283
Max Temp:	1036	1008	982	970	928	750	1272	1269	1281	1283
Max Allowed:	397	397	397	398	398	398	397	398	398	398

Time (min)	TC #281 (°F)	TC #282 (°F)	TC #283 (°F)	TC #284 (°F)	TC #285 (°F)	TC #286 (°F)	TC #287 (°F)	TC #288 (°F)	TC #289 (°F)	TC #290 (°F)
0	72	72	72	72	72	72	72	72	72	73
1	72	72	72	72	72	72	72	72	72	73
2	72	72	72	72	72	72	73	73	73	73
3	73	73	73	73	73	73	77	79	75	75
4	77	75	75	75	75	75	81	84	81	79
5	81	79	79	81	79	79	86	88	86	82
6	84	81	82	84	82	82	91	91	90	86
7	88	84	86	88	86	86	97	95	93	90
8	91	86	90	91	90	90	100	99	99	93
9	93	90	93	95	93	93	104	102	102	97
10	97	93	97	100	97	97	109	106	106	100
11	102	97	100	104	100	102	115	109	111	104
12	106	100	106	109	104	106	120	115	117	109
13	111	106	111	115	109	111	127	120	122	115
14	118	111	117	120	115	117	135	127	129	120
15	126	118	124	127	122	124	144	135	136	127
16	133	126	131	135	129	131	151	144	144	135
17	140	133	140	144	136	138	158	151	151	144
18	149	142	147	151	144	145	165	158	158	151
19	156	151	156	158	153	154	171	167	165	158
20	165	158	165	165	162	162	174	174	171	165
21	172	167	174	171	169	169	181	180	178	172
22	180	174	180	176	176	176	196	187	187	178
23	187	180	187	185	181	181	208	192	198	189
24	198	187	194	194	190	190	219	199	208	198
25	208	196	205	203	201	201	234	212	221	208
26	221	208	216	212	212	212	252	223	234	219
27	234	221	228	225	223	223	271	237	246	230
28	248	234	243	237	235	237	295	253	262	243
29	264	248	257	253	250	252	320	271	280	259
30	282	266	275	271	266	268	345	291	302	275
31	302	284	293	293	284	288	372	313	324	295
32	324	304	315	316	306	309	399	336	349	316
33	349	325	336	343	327	333	428	361	374	338
34	374	349	361	374	352	358	457	387	399	363
35	399	374	388	405	378	385	486	414	426	388
36	428	401	417	435	406	412	514	442	453	415
37	457	428	448	468	435	442	543	471	482	444
38	486	457	478	500	464	471	572	500	511	475
39	516	487	513	532	495	504	601	529	540	505
40	547	518	545	567	525	536	630	561	570	538
41	579	550	579	603	558	568	658	594	601	570
42	612	585	615	640	590	603	689	628	633	606
43	646	619	651	678	626	639	721	664	667	642
44	682	655	687	718	662	675	756	700	702	680
45	718	691	721	757	698	711	788	738	736	720
46	752	725	757	799	734	747	819	775	770	757
47	788	761	793	842	772	783	851	811	804	797
48	824	799	828	892	811	820	883	849	840	835
49	862	838	865	937	851	858	918	887	878	876
50	903	882	909	977	896	901	955	928	919	921
51	946	925	952	1015	943	946	991	972	959	964

Time (min)	TC #281 (°F)	TC #282 (°F)	TC #283 (°F)	TC #284 (°F)	TC #285 (°F)	TC #286 (°F)	TC #287 (°F)	TC #288 (°F)	TC #289 (°F)	TC #290 (°F)
52	990	970	995	1054	988	991	1027	1011	1000	1008
53	1033	1013	1036	1090	1033	1033	1063	1053	1040	1049
54	1072	1056	1078	1128	1076	1074	1098	1092	1078	1089
55	1112	1098	1116	1161	1116	1114	1132	1130	1114	1126
56	1148	1134	1152	1195	1148	1152	1164	1164	1150	1162
57	1182	1170	1184	1227	1180	1188	1197	1200	1184	1198
58	1216	1206	1216	1258	1213	1222	1227	1233	1215	1231
59	1249	1240	1247	1287	1245	1252	1256	1263	1243	1261
60	1279	1270	1278	1315	1278	1283	1285	1294	1272	1290
Max Temp:	1279	1270	1278	1315	1278	1283	1285	1294	1272	1290
Max Allowed:	397	397	397	397	397	397	397	397	397	398

Time (min)	TC #291 (°F)	TC #292 (°F)	TC #293 (°F)	TC #294 (°F)	TC #295 (°F)	TC #296 (°F)	TC #297 (°F)	TC #298 (°F)	TC #299 (°F)	TC #300 (°F)
0	72	72	72	72	72	72	72	72	72	73
1	72	72	72	72	72	72	72	72	72	73
2	72	72	72	72	72	72	72	72	72	73
3	72	72	73	73	73	73	72	73	73	75
4	72	72	77	75	75	75	73	75	75	79
5	72	73	81	81	81	79	75	77	77	84
6	73	75	84	84	86	82	79	81	81	88
7	73	77	86	90	90	86	82	84	84	93
8	73	79	90	93	95	91	86	88	90	100
9	75	81	95	99	100	97	90	93	95	108
10	75	82	99	102	106	102	95	99	100	115
11	75	84	104	108	113	108	100	104	108	124
12	77	88	111	115	118	115	106	111	115	133
13	79	90	117	122	126	122	113	118	124	140
14	79	93	122	127	133	127	118	126	133	149
15	81	97	127	133	140	135	126	133	142	156
16	82	100	133	140	147	142	133	138	149	162
17	84	104	138	145	154	147	140	145	156	169
18	86	108	144	149	158	153	147	153	162	172
19	88	109	147	154	163	158	153	158	167	176
20	90	113	149	158	167	162	158	163	172	180
21	91	115	153	160	169	167	163	169	176	183
22	93	118	154	163	172	171	167	172	181	189
23	93	120	156	167	174	174	171	178	189	199
24	95	122	158	169	176	176	174	183	199	219
25	97	126	162	174	178	180	180	192	212	244
26	99	127	167	180	181	183	183	207	226	273
27	100	133	174	187	185	190	190	223	248	307
28	102	136	185	196	190	203	199	241	284	345
29	106	144	201	208	203	219	212	266	313	385
30	108	151	219	225	223	235	230	291	340	423
31	111	160	244	243	244	257	252	318	367	457
32	115	171	268	268	273	282	277	349	399	491
33	120	183	293	295	302	311	306	378	433	525
34	126	196	320	325	334	342	338	410	469	561
35	131	210	351	356	367	374	370	442	507	597
36	136	226	381	388	403	408	405	475	545	631
37	144	243	410	421	439	442	439	511	583	664
38	151	259	439	451	471	477	471	545	622	696
39	158	273	468	484	505	513	505	583	664	729
40	167	289	493	518	541	549	540	619	707	761
41	174	306	518	552	579	586	574	655	750	792
42	181	320	545	586	615	622	610	691	790	824
43	190	336	570	617	649	657	644	727	828	855
44	198	352	597	649	682	691	676	759	865	885
45	205	370	624	680	718	725	711	792	900	914
46	214	387	649	709	750	757	745	822	936	946
47	223	403	675	739	781	790	777	855	973	979
48	230	419	700	766	810	820	808	885	1011	1011
49	241	437	725	793	838	849	837	914	1047	1044
50	248	455	748	820	865	878	867	945	1081	1074
51	257	471	774	846	892	905	896	975	1117	1105

Time (min)	TC #291 (°F)	TC #292 (°F)	TC #293 (°F)	TC #294 (°F)	TC #295 (°F)	TC #296 (°F)	TC #297 (°F)	TC #298 (°F)	TC #299 (°F)	TC #300 (°F)
52	268	489	797	873	919	932	925	1006	1152	1135
53	277	507	822	900	948	961	955	1036	1184	1164
54	286	523	846	927	977	990	986	1067	1218	1195
55	297	541	869	954	1006	1018	1015	1098	1252	1224
56	307	561	894	982	1035	1047	1044	1128	1285	1254
57	320	581	921	1011	1063	1076	1074	1159	1317	1285
58	331	601	950	1040	1092	1107	1105	1191	1351	1317
59	342	622	981	1072	1123	1137	1135	1222	1380	1348
60	352	644	1015	1105	1157	1170	1166	1254	1411	1375
Max Temp:	352	644	1015	1105	1157	1170	1166	1254	1411	1375
Max Allowed:	397	397	397	397	397	397	397	397	397	398

Time (min)	TC #301 (°F)	TC #302 (°F)	TC #303 (°F)	TC #304 (°F)	TC #305 (°F)	TC #306 (°F)	TC #307 (°F)	TC #308 (°F)	TC #309 (°F)	TC #310 (°F)
0	73	73	73	73	73	72	73	73	73	73
1	73	73	73	73	72	72	72	72	73	73
2	73	75	74	73	73	73	73	73	73	73
3	75	78	78	74	74	73	73	73	73	74
4	77	83	84	78	77	73	73	73	74	76
5	81	87	90	82	80	75	73	73	76	79
6	85	92	97	87	84	76	73	74	78	82
7	90	98	103	93	88	78	74	75	80	86
8	96	105	110	98	92	80	75	76	81	88
9	103	113	117	104	97	82	76	76	83	91
10	111	121	126	112	103	85	77	77	85	94
11	119	130	136	120	109	88	78	78	87	97
12	128	139	144	128	114	92	79	78	89	101
13	136	147	151	135	120	95	80	79	91	105
14	144	155	157	142	126	99	82	80	94	111
15	151	162	162	147	131	102	84	81	98	117
16	158	171	167	152	135	106	86	83	101	123
17	163	180	170	156	139	109	87	84	105	129
18	169	194	174	161	143	112	89	86	110	136
19	175	213	177	165	147	115	91	88	114	142
20	180	229	181	168	150	118	93	90	119	148
21	186	245	186	172	156	122	94	92	123	153
22	194	261	193	178	163	125	96	95	127	158
23	205	277	210	186	174	130	98	97	131	160
24	219	294	240	197	187	135	100	99	134	163
25	238	314	270	213	203	140	103	102	137	164
26	263	337	303	235	223	148	106	104	139	165
27	290	364	339	262	246	157	109	106	141	167
28	320	392	375	294	272	168	113	108	143	170
29	352	421	410	327	298	181	118	110	146	176
30	386	452	446	361	325	195	123	112	149	185
31	420	483	481	396	354	211	129	115	155	197
32	453	516	515	431	382	227	136	118	161	210
33	487	548	549	465	412	245	143	121	168	225
34	521	581	584	500	443	264	151	125	177	243
35	556	613	619	534	472	283	159	129	187	265
36	590	645	652	569	499	302	168	133	198	290
37	624	676	685	603	529	322	177	138	213	319
38	656	705	718	637	561	344	187	144	229	349
39	688	734	750	670	593	366	197	150	247	381
40	720	763	782	703	627	390	208	157	266	413
41	751	791	812	735	660	415	219	164	286	446
42	781	819	841	766	691	439	231	172	307	479
43	811	847	870	797	721	463	242	181	329	512
44	840	874	899	827	749	488	255	190	350	546
45	869	901	929	856	776	512	267	199	373	582
46	898	928	959	885	803	536	280	209	397	619
47	927	957	988	914	829	559	293	220	421	658
48	958	986	1016	943	855	583	306	231	446	698
49	988	1015	1044	972	881	607	318	243	472	740
50	1019	1043	1072	1001	908	631	331	255	499	782
51	1048	1070	1098	1030	936	655	344	267	526	823

Time (min)	TC #301 (°F)	TC #302 (°F)	TC #303 (°F)	TC #304 (°F)	TC #305 (°F)	TC #306 (°F)	TC #307 (°F)	TC #308 (°F)	TC #309 (°F)	TC #310 (°F)
52	1078	1097	1124	1059	964	679	357	280	554	865
53	1107	1125	1152	1089	993	705	371	294	583	906
54	1136	1153	1181	1119	1022	732	384	307	612	945
55	1165	1181	1211	1150	1052	757	399	321	639	979
56	1194	1211	1242	1182	1083	784	413	335	666	1005
57	1225	1242	1275	1215	1116	812	427	348	690	1026
58	1257	1275	1308	1248	1151	840	443	362	713	1048
59	1291	1310	1341	1282	1187	869	458	374	733	1069
60	1327	1345	1371	1314	1223	898	475	387	753	1089
Max Temp:	1327	1345	1371	1314	1223	898	475	387	753	1089
Max Allowed:	398	398	398	398	398	397	398	398	398	398

Time (min)	TC #311 (°F)	TC #312 (°F)	TC #313 (°F)	TC #314 (°F)	TC #315 (°F)	TC #316 (°F)	TC #317 (°F)	TC #318 (°F)	TC #319 (°F)	TC #320 (°F)
0	73	73	73	72	72	72	72	72	73	73
1	73	73	73	73	73	73	73	73	73	73
2	73	75	76	78	73	73	73	73	73	73
3	76	80	83	84	76	73	74	74	74	74
4	81	87	89	89	81	75	76	77	76	76
5	86	93	93	94	86	78	79	81	80	78
6	90	97	98	98	92	82	83	85	84	83
7	94	101	103	104	97	86	88	89	88	87
8	98	105	109	111	102	91	92	93	93	93
9	101	110	115	119	108	96	97	98	98	98
10	105	116	123	128	114	101	102	103	103	103
11	110	123	131	136	121	108	108	109	108	109
12	115	130	139	145	129	115	115	115	114	115
13	122	138	148	153	137	122	122	122	121	120
14	128	145	157	163	146	130	130	130	128	126
15	135	153	167	174	154	139	138	138	135	133
16	142	160	178	185	162	147	146	145	143	140
17	149	168	189	195	169	155	153	153	150	146
18	156	178	202	206	174	163	159	160	157	153
19	162	190	214	217	179	169	165	165	163	158
20	169	201	227	228	183	174	170	171	169	164
21	176	213	240	240	187	178	173	175	173	168
22	182	225	252	251	192	181	176	178	176	171
23	188	238	265	262	198	184	178	181	178	174
24	196	250	278	274	206	186	181	185	179	176
25	204	264	290	285	216	190	188	194	181	178
26	213	277	303	298	228	199	199	204	184	179
27	223	292	316	311	242	212	210	214	190	179
28	234	306	330	325	260	226	221	224	198	181
29	248	323	345	340	280	243	234	236	206	184
30	265	341	362	357	302	262	248	248	216	195
31	285	361	380	375	326	283	264	262	227	209
32	308	384	401	396	351	308	282	279	240	225
33	334	409	424	420	378	337	302	298	255	243
34	362	435	450	446	408	371	327	318	271	264
35	392	464	477	474	441	411	357	341	292	292
36	424	494	507	504	478	456	393	368	316	326
37	458	526	538	537	516	508	434	399	347	369
38	492	558	571	571	559	576	480	433	384	419
39	528	593	606	611	608	661	532	471	430	474
40	565	630	643	652	661	762	593	514	481	533
41	603	668	682	696	722	889	662	560	534	596
42	643	707	722	743	793	1030	742	613	587	663
43	685	748	765	795	869	1137	824	674	645	734
44	729	791	811	851	939	1199	906	751	706	803
45	774	836	861	914	1007	1264	981	838	771	875
46	821	883	914	974	1071	1319	1056	933	843	949
47	868	932	967	1030	1129	1374	1133	1020	929	1030
48	916	980	1019	1083	1184	1424	1208	1083	1025	1114
49	965	1029	1070	1134	1237	1464	1265	1117	1123	1192
50	1012	1077	1117	1179	1283	1506	1294	1143	1193	1246
51	1057	1120	1155	1216	1322	1537	1321	1198	1202	1257

Time (min)	TC #311 (°F)	TC #312 (°F)	TC #313 (°F)	TC #314 (°F)	TC #315 (°F)	TC #316 (°F)	TC #317 (°F)	TC #318 (°F)	TC #319 (°F)	TC #320 (°F)
52	1099	1158	1190	1253	1361	1576	1358	1245	1237	1292
53	1134	1187	1224	1290	1396	1598	1389	1272	1283	1329
54	1162	1215	1257	1325	1430	1623	1414	1298	1329	1361
55	1184	1244	1289	1357	1463	1650	1437	1334	1367	1386
56	1202	1274	1320	1387	1492	1664	1460	1369	1393	1410
57	1223	1301	1349	1416	1517	1678	1484	1402	1407	1436
58	1245	1326	1376	1442	1540	1691	1513	1432	1421	1464
59	1266	1351	1403	1468	1563	1701	1550	1460	1445	1491
60	1287	1375	1429	1493	1583	1712	1585	1486	1471	1515
Max Temp:	1287	1375	1429	1493	1583	1712	1585	1486	1471	1515
Max Allowed:	398	398	398	397	397	397	397	397	398	398

Time (min)	TC #321 (°F)	TC #322 (°F)	TC #323 (°F)	TC #324 (°F)	TC #325 (°F)	TC #326 (°F)	TC #327 (°F)	TC #328 (°F)	TC #329 (°F)	TC #330 (°F)
0	73	73	73	72	72	72	72	72	72	73
1	74	73	73	72	72	72	78	76	78	79
2	75	74	73	72	72	72	82	78	87	86
3	76	75	74	73	72	72	79	76	84	86
4	77	76	75	73	73	73	77	76	80	82
5	79	79	77	73	73	73	76	76	78	80
6	82	81	78	73	73	73	76	76	78	79
7	86	83	80	74	73	73	76	76	77	78
8	91	86	81	75	74	74	77	76	77	78
9	95	89	83	75	74	74	77	77	77	78
10	100	93	85	76	74	74	78	77	77	78
11	106	96	88	77	75	75	78	77	77	78
12	111	100	90	78	75	75	78	78	77	78
13	117	105	93	79	75	75	78	79	78	78
14	124	110	97	80	75	75	78	80	78	78
15	131	115	101	81	76	75	80	81	78	79
16	137	121	105	83	76	76	80	82	79	80
17	143	126	109	84	76	76	82	83	80	81
18	150	132	113	86	76	76	83	85	81	83
19	155	137	118	87	77	77	84	86	82	82
20	160	142	122	89	78	77	86	87	83	83
21	164	146	125	91	78	78	87	89	84	84
22	167	149	129	93	79	78	88	89	86	86
23	170	152	132	94	79	79	89	90	87	87
24	172	155	134	96	80	80	91	91	88	89
25	175	158	137	98	81	80	92	92	89	90
26	178	160	140	100	81	81	92	93	90	91
27	182	163	143	102	82	83	93	94	92	92
28	190	167	147	104	83	84	94	95	91	93
29	200	171	151	106	84	86	95	97	92	95
30	211	178	155	108	86	88	97	99	93	102
31	229	187	160	110	87	90	99	102	95	108
32	253	199	166	113	89	92	102	105	98	113
33	284	215	175	116	94	98	105	110	101	115
34	325	234	183	119	102	108	109	113	104	114
35	378	259	193	122	104	109	112	116	107	115
36	444	289	206	126	105	111	115	119	109	118
37	516	326	220	131	106	113	118	122	111	123
38	592	367	236	136	107	116	122	126	116	131
39	676	413	256	142	109	118	125	129	123	143
40	773	464	277	148	111	121	129	132	134	161
41	880	519	302	156	113	123	132	136	152	192
42	975	580	330	165	114	125	136	139	191	245
43	1051	644	360	174	116	128	140	142	204	287
44	1116	711	394	186	118	130	144	146	207	309
45	1173	783	431	198	119	131	147	149	209	327
46	1223	851	470	211	121	133	151	152	212	346
47	1267	908	511	226	123	135	155	155	217	364
48	1307	960	552	241	125	138	158	158	223	383
49	1334	1010	593	257	128	140	162	162	230	404
50	1366	1056	635	274	130	143	166	166	236	421
51	1399	1096	677	291	133	146	170	169	243	437

Time (min)	TC #321 (°F)	TC #322 (°F)	TC #323 (°F)	TC #324 (°F)	TC #325 (°F)	TC #326 (°F)	TC #327 (°F)	TC #328 (°F)	TC #329 (°F)	TC #330 (°F)
52	1433	1134	719	308	135	148	174	173	249	451
53	1463	1170	761	325	138	151	179	176	256	463
54	1489	1202	801	343	141	153	184	180	265	475
55	1513	1234	840	360	144	156	188	184	275	486
56	1535	1263	877	378	147	160	193	187	288	497
57	1557	1289	909	397	151	163	197	191	302	507
58	1579	1315	940	414	154	166	201	195	314	516
59	1599	1339	967	431	157	169	205	199	327	527
60	1617	1360	994	448	161	173	209	202	341	537
Max Temp:	1617	1360	994	448	161	173	209	202	341	537
Max Allowed:	398	398	398	397	397	397	397	397	397	398

Time (min)	TC #331 (°F)	TC #332 (°F)	TC #333 (°F)	TC #334 (°F)	TC #335 (°F)
0	73	73	73	73	73
1	78	80	75	79	75
2	84	84	77	89	78
3	79	80	78	84	77
4	77	78	78	81	78
5	77	78	79	80	79
6	76	78	79	80	80
7	76	79	80	80	80
8	76	79	80	81	80
9	76	79	81	81	81
10	76	80	82	81	81
11	76	81	83	81	82
12	76	83	84	81	83
13	77	84	85	82	84
14	77	86	86	82	85
15	78	87	88	82	86
16	78	89	89	83	87
17	79	91	91	84	89
18	80	94	92	84	90
19	82	98	93	85	91
20	84	100	95	86	92
21	86	101	96	87	93
22	88	102	98	89	93
23	89	102	100	90	94
24	90	102	103	91	95
25	91	103	108	93	98
26	92	103	112	94	101
27	93	105	117	95	104
28	95	107	122	97	108
29	97	111	127	99	112
30	100	115	132	101	117
31	103	120	137	103	121
32	107	125	142	107	126
33	111	129	147	111	131
34	114	134	153	115	136
35	118	139	158	120	141
36	122	144	164	125	148
37	127	149	170	131	154
38	131	154	176	140	161
39	136	160	182	150	168
40	140	165	188	162	175
41	145	170	194	185	184
42	149	176	200	238	192
43	154	181	206	293	199
44	157	186	213	346	208
45	162	192	219	384	216
46	166	197	225	416	226
47	171	203	232	443	235
48	176	209	238	467	245
49	181	215	245	490	254
50	186	221	253	509	263
51	191	227	259	525	271

Time (min)	TC #331 (°F)	TC #332 (°F)	TC #333 (°F)	TC #334 (°F)	TC #335 (°F)
52	195	232	266	535	278
53	200	238	274	544	286
54	204	243	282	550	294
55	209	248	290	557	302
56	213	254	298	568	310
57	217	259	304	580	317
58	221	265	312	592	325
59	226	271	318	607	332
60	230	278	325	627	339
Max Temp:	230	278	325	627	339
Max Allowed:	398	398	398	398	398

Appendix E

HEMYC INSTALLATION PROCEDURES

SANDIA TEST NUMBER 2

FABRICATION AND INSTALLATION CLARIFICATIONS

1. 2" Kaowool was wrapped completely around both hangers on the Junction Box. The Hemyc was then installed on the Junction Box and the covered assembly was mounted on the insulated supports to eliminate any possible heat transfer from the hangers to the Box
2. Additional bands were installed between the required 9" spacing to close gaps in the Hemyc on Trays A and C.
3. Hemyc piece number C-T1 only extended 4" above the top of the Test Deck.
4. Hemyc pieces on Trays B and D were stitched together where the pieces overlapped to close gaps in the overlaps along the side rails.
5. 3 pieces of _" all thread 2 _" long were welded to a perpendicular framing strut located above the bottom overlap joint of Tray D. The inside Hemyc pad extended 1" past the all thread and the outside Hemyc pad extended 3" past for a total overlap of 4". The Hemyc was then secured with fender washers and lock nuts.
6. At the attachment locations on Trays B and D where 3 layers of Hemyc were attached to the same stud, the first 2 layers were held in place with a fender washer and nut. The washer and nut were left in place and the third layer of Hemyc was installed and held with another fender washer and lock nut.
7. There were 8 - 1 _" fender washers used on Tray B instead of the 1 _".
8. A patch of Refrasil cloth was installed on the underside of Tray D. A few other minor scuffs or tears were stitched in other areas.
9. Hemyc pieces 2D-T1, T2, B1 and B2 only extended 4" to 5" above the test deck.
10. The top inside stud on the frame work for Tray D broke during installation. The stud was located 4" above the test deck. A _" stainless steel band was installed around the tray assembly at that location to secure the Hemyc to the framework.
11. The 2" overlap on Tray A was incorporated into a butt joint placed on the top of the tray side rail. This was done because the joint would have had no support on the top middle of the tray and might have unduly influenced test results if the overlap was placed on the bottom of the tray.
12. Hemyc piece 2E-2 was cut approximately in half and field stitched to provide a perimeter butt joint 17" below the test deck. A 6" wide collar was field fabricated and installed over the butt joint.
13. No vertical perimeter overlap joint was included on cable drop F.
14. 2 - _" stainless steel bands were attached to the test deck and used to support the horizontal joints on the cable drops E and F.
15. _" stainless steel bands were used to secure the Junction Box to the hangers.
16. IP-8400.103, Issue G specifies an 8" minimum width on collars for perimeter butt joints and a 4" perimeter overlap joint. A 6" maximum width collar and a 2" maximum perimeter overlap was used in the test that conform to the

minimum collar and overlap dimensions specified in IP-8400.103, Issue E (5/1/84).

17. Prior to the test on March 25, 2005, one additional band was installed on the corner of the 90° angle of Tray A and Tray C. The bands were installed to replace bands which were loose in the same location.
18. The vertical pads on 2B only extended ~4" above the test deck.
19. 2E and 2F were installed in positions reversed from the original layout plan.

Mike Jordan
3-30-05

ISSUE DESIGNATION IN THIS COLL INDICATES CURRENT CHANGE

FABRICATION OF HEMYC PROTECTIVE WRAP SYSTEM COMPONENTS

1.0 PURPOSE

The purpose of this procedure is to assure that the fabrication of the HEMYC Cable Protection System Components is consistent with the system components as tested in the various qualification tests. The Fire Qualification Test, referenced as CTP-1026, consisted of a One (1) Hour Fire Exposure, per ASTM E-119 criteria, including hose stream in accordance with the American Nuclear Insurers Information Bulletin No. 5(79) entitled, "ANI/MAERP Standard Fire Endurance Test Method to Qualify a Protective Envelope for Class Circuits".

2.0 SCOPE

This procedure provides the methods and guidelines for the fabrication of both cable tray and conduit protection system components. The fabrication and quality verification shall be performed on-site by Client personnel that have been trained and certified by PROMATEC.

3.0 REFERENCE

3.1 10CFR50, Appendix R

3.2 ANI Bulletin No. 5(79)

3.3 HEMYC Fire Qualification Test, CTP-1026

3.4 ANI Acceptance dated 08/02/82

3.5 QCP-10001, Packaging, Shipping, Receiving, Handling and Storage for HEMYC Protective Wrap Components

3.6 QCP-10002, Fabrication Inspection for HEMYC Protective Wrap Components

3.7 HEMYC Protective Wrap System Typicals, PROMATEC Drawings B-310, B-311, B-312 and B-313

4.0 DEFINITIONS

None

5.0 RESPONSIBILITIES

5.1 The authorized Installer's ENGINEERING DEPARTMENT shall be responsible to define the scope of work as prescribed on the applicable contract documents and to provide the applicable drawings, specifications, requirements, instructions, etc., to the department responsible for fabrication and installation.

ISSUE DESIGNATION IN THIS COLL INDICATES CURRENT CHANGE

This department shall also be responsible to provide liaison with applicable client personnel and other internal departments to assure a smooth flow of communication.

5.2 The authorized Installer's PRODUCTION DEPARTMENT shall be responsible for the identification and scheduling of work to be performed as defined on the documents furnished by ENGINEERING.

The Installer's FABRICATION DEPARTMENT, as trained and certified by PROMATEC, shall be responsible for the initiation of appropriate Fabrication Orders, verify their authenticity, initiate appropriate procurement documents and provide these documents to the fabrication facility.

5.3 The Installer's QUALITY CONTROL PERSONNEL, as trained and certified by PROMATEC, shall be responsible for appropriate inspection, documentation and monitoring.

6.0 PROCEDURE

6.1 Only approved materials as listed below shall be utilized in the fabrication of HEMYC Cable Protection System Components.

ACCEPTABLE MATERIALS

6.1.1 External Fabric

A. Siltemp WR84CSR, Thermal Barrier Cloth, 0.030 nom. thickness, 18oz/yd^2

B. or Approved equal

6.1.2 Internal Fabric

A. Klever 600/6 or J.P. Stevens #332 Fiberglass Cloth, 49" width, 13oz/yd^2

B. or Approved equal (Internal fabric may be used on the non-fire side of protective blanket as necessary. If used, external fabric must overlap a minimum of six (6") inches on to non-fire side.

6.1.3 Internal Filler

A. Johns-Manville Cerablanket
6 or 8 lb density
0.5, 1.5 and/or 2.0 inch thickness

OR

B. Babcock & Wilcox Kaowool Ceramic Fiber Blanket
6 or 8 lb density
0.5, 1.5 and/or 2.0 inch thickness

OR

C. Approval equal

6.1.4 Thread

A. Astroquartz sewing thread Type Q-24 Teflon coated; approximately .020" diameter
Breaking Strength -- 20 lbs

OR

B. Alphaquartz sewing thread Type Q-24 Teflon coated; approximately .020" diameter
Breaking Strength -- 20 lbs

OR

C. Approved equal

6.2 Fabrication Order (Form QC-59)

6.2.1 The completed Fabrication Order (Form QC-59) shall be provided to the fabrication facility.

6.2.2 This form shall define information as listed below:

A. Fabrication Order

B. Blanket Number

C. Project Number

D. Project Name

E. Location -- building, room, elevation

F. Drawing Reference

G. Blanket Length

H. Width

I. Thickness ___0.5", ___1.5", ___2"

J. Tray Identification

K. Conduit Identification

L. Other -- General comments, description, etc.

M. Sketch -- Brief sketch as required

N. Client Acceptance

ISSUE DESIGNATION IN THIS COLL INDICATES CURRENT CHANGE

ISSUE DESIGNATION IN THIS COLI INDICATES CURRENT CHANGE

O. Certification

P. Ordered by and Date

Q. PROMATEC QA/QC Acceptance and Date

If any information is not required, N/A shall be inserted in the applicable area.

6.3 Manufacture of Protective Wrap Components

6.3.1 Initial Envelope Assembly (Figure 1)

6.3.1.1 Cut external and internal (if required) fabrics to proper dimensions - as defined by fabricator to assure proper finished dimensions as specified on the applicable fabrication order. As applicable, fabricator shall measure from the "finished" edge of fabrics not the "factory" edge.

6.3.1.2 Double stitch external and internal fabrics together as shown in Figure 1. If only external fabric is used double stitch fabric together as shown in Figure 1A.

6.3.1.3 Double stitch one end of blanket as shown in Figure 2/2B, if applicable. Fabricator may elect to insert blanket prior to closure of either end. In this case, refer to Item 6.3.3.2 for instructions.

During fabrication of wraps it may be necessary to use staples, pins or clips to hold fabrics together while sewing. These may remain within the system but shall not damage or be detrimental to the wrap.

6.3.1.4 Turn envelope assembly inside out to hide exposed rough edges of fabric and provide a "finished" seam appearance.

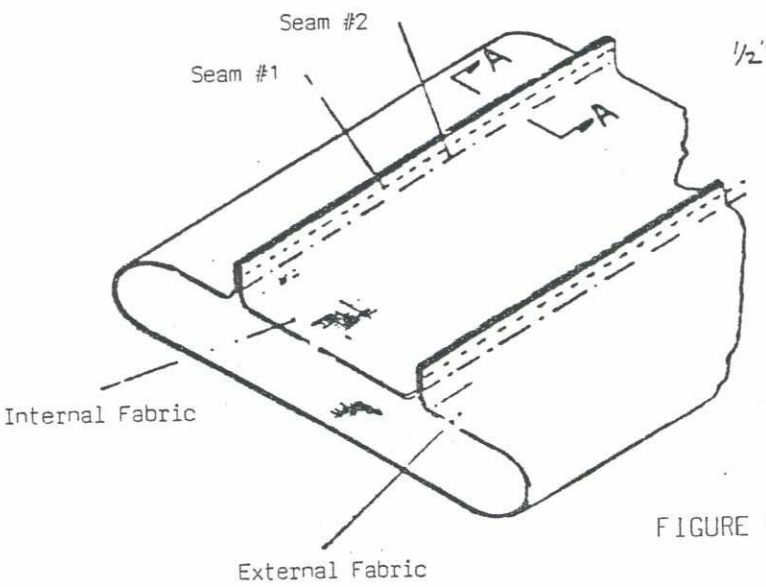

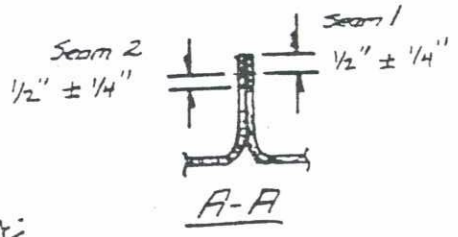

FIGURE 1

ISSUE DESIGNATION IN THIS COLL ,4DICATES CURRENT CHANGE

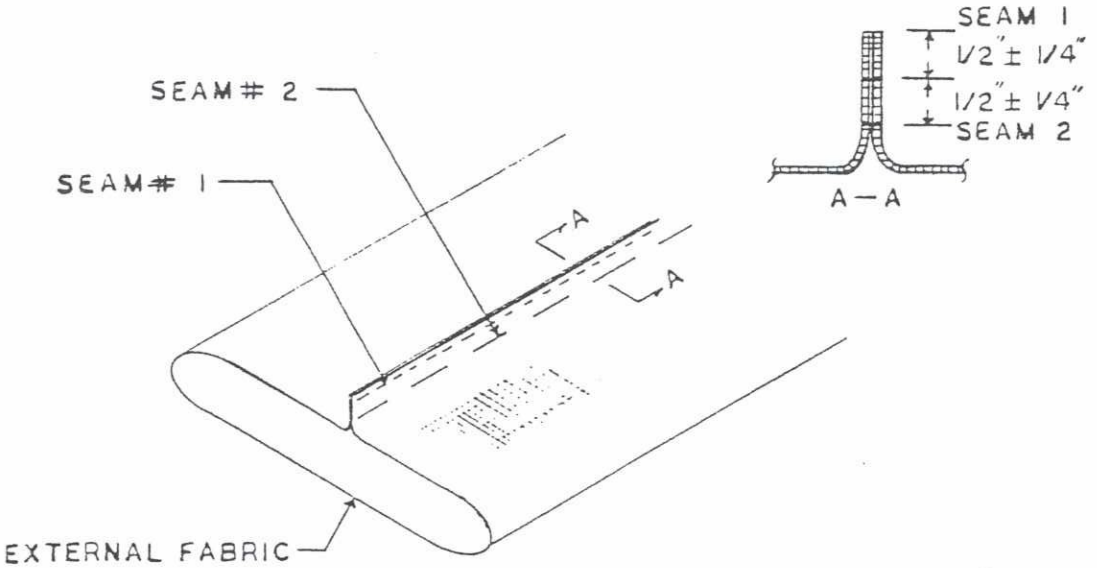

FIGURE 1A

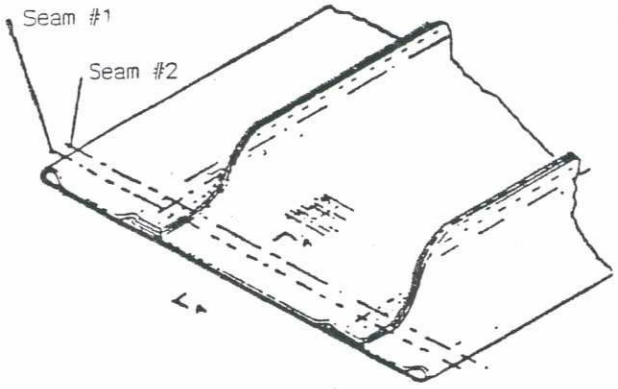

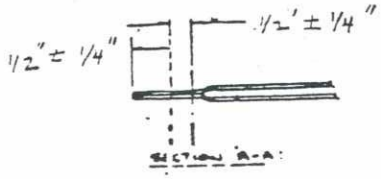

FIGURE 2

OR

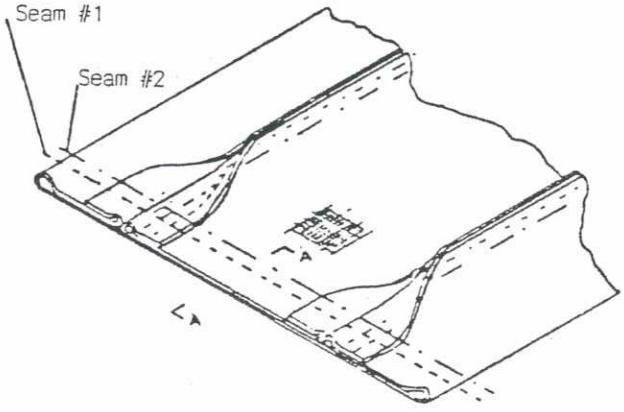

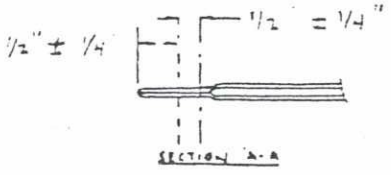

FIGURE 2B

ISSUE DESIGNATION IN THIS COLL .NDICATES CURRENT CHANGE

6.3.2 Insertion of Filler Material

6.3.2.1 Cut filler material to proper size (as defined by fabricator to assure proper finished dimension) 0.5" thick - HEMYC Wrap; 1.5" thick - Cable Tray; 2" thick - Conduit.

6.3.2.2 Multiple pieces of filler material may be required to fabricate wraps. To prevent joint gaps in filler material, trim pieces as shown in Figure 3 and secure "darts" spaced on maximum nine (9") inch centers for two (2") inch blankets or four (4") inch hand sewn seam (See Figure 4) for 0.5" and 1.5" blankets. Darts or seam shall be placed parallel to overlap pieces a minimum six (6") inches = 1" from center line of overlap.

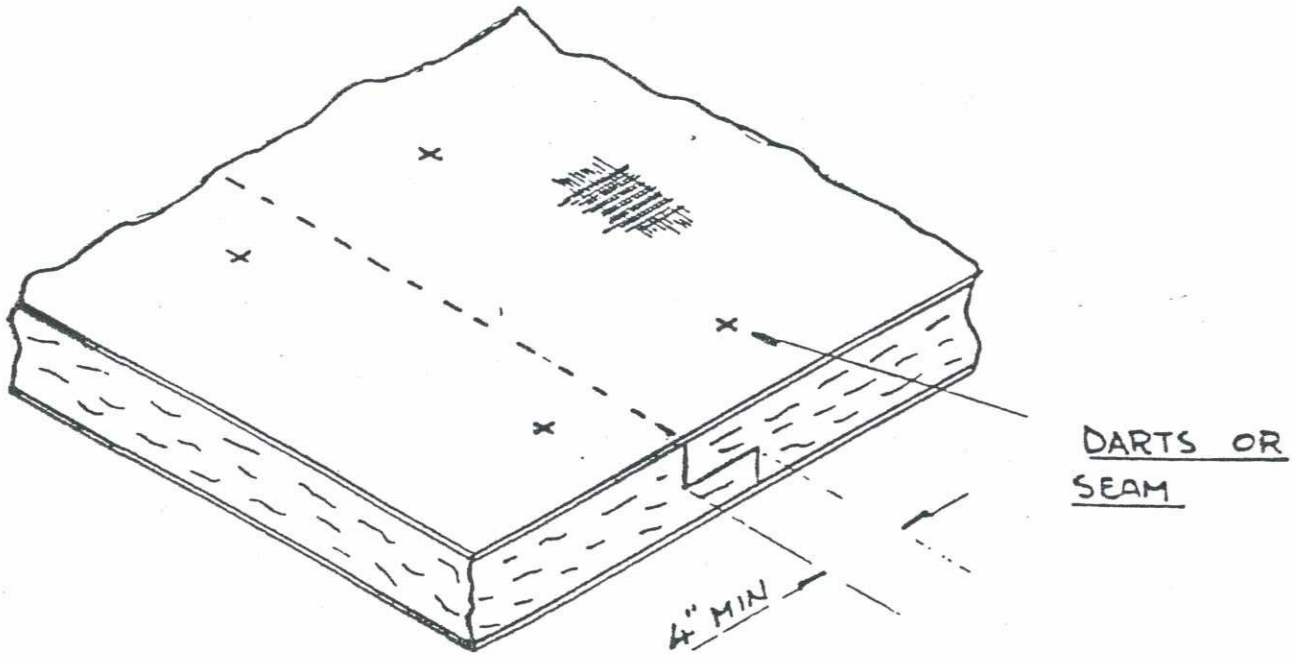

FIGURE 3

6.3.2.3 Insert filler material inside envelope assembly assuring that filler material is kept flat and occupies the entire interior of the envelope and is relatively tight.

6.3.2.4 If filler material has a tendency to "bunch up" during installation, the fabricator shall smooth by hand or use other means to assure total fill. Method used shall not cause damage or be detrimental to the Wrap System.

NOTE: If filler material appears to be too large creating "puckers" at

ISSUE DESIGNATION IN THIS COLI INDICATES CURRENT CHANGE

stitches, remove filler material and trim as necessary.

6.3.3 Completion of Envelope Assembly

6.3.3.1 Roll under fabric at open end and double stitch as shown in Figure 4A.

6.3.3.2 If both ends were left open until insertion of filler material, both ends shall now be closed as shown in Figure 4A.

6.3.4 Longitudinal Stitching

6.3.4.1 Longitudinal stitching shall be performed as shown in Figure 4. When multiple widths of filler material are required (Item 6.3.2.2) a minimum of two (2) rows of longitudinal stitches must be in each multiple width.

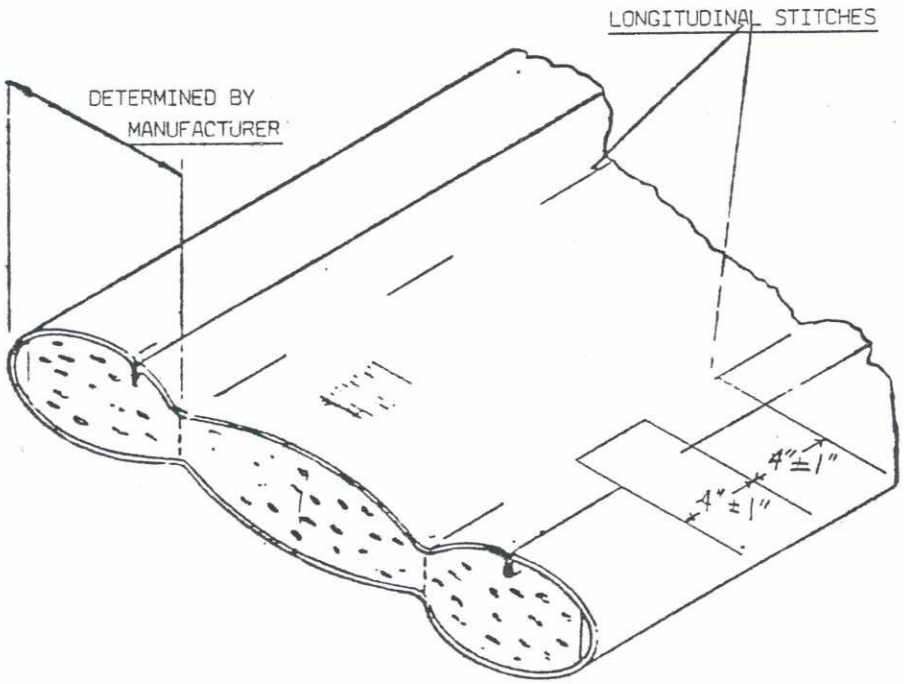

FIGURE 4
Typical Section Through Blanket

ISSUE DESIGNATION IN THIS COLU NDICATES CURRENT CHANGE

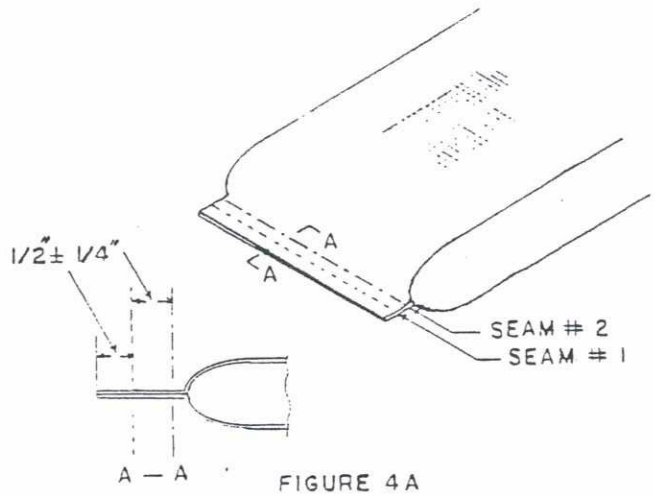

FIGURE 4A

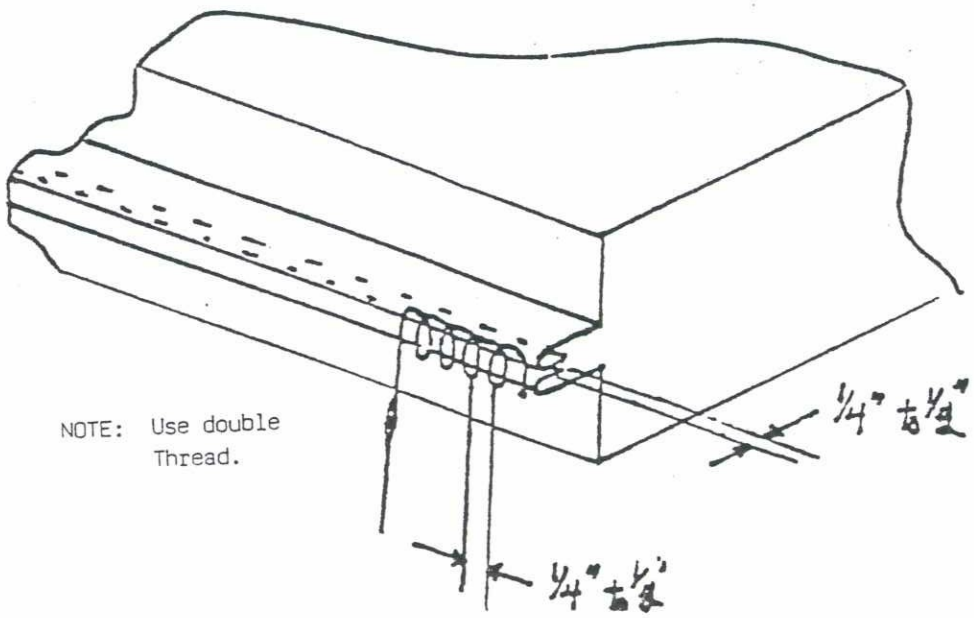

FIGURE 4B
ALTERNATE BLANKET CLOSURE
HAND SEWN METHOD

Page 211

ISSUE DESIGNATION IN THIS COL INDICATES CURRENT CHANGE

C

6.3.4.2 The specific placement of the longitudinal stitches is at the discretion of the fabricator.

6.3.4.3 Darts or similar may be used instead of longitudinal seams to secure the filler material in position. Refer to Figure 5.

6.3.4.4 The following requirements shall be complied with for darting/stitching to secure the filler material in position for HEMYC Blankets:

A) Any blanket with a circumferential dimension of sixteen (16") inches or less need not be darted if the filler material is of one piece.

B) Any blanket with a circumferential dimension of more than sixteen (16") inches but less than twenty-four (24") inches shall have at least one row of darts/stitches. Every multiple of eight (8") inches in that same dimension shall require an additional row of darts/stitches thereafter. Blankets with multiple pieces of filler material shall have at least one row of darts/stitches per piece.

C) For stitching to secure filler material the distance, in length, between stitches shall not exceed four (4") inches. For darts the distance shall not exceed nine (9") inches.

D) Equidistant placement of darts across the circumferential dimension is required unless there are multiple pieces of filler material, then the requirements of Item B above also apply.

E) All tolerances in darting/stitching shall be $\pm$ 1/4 inch.

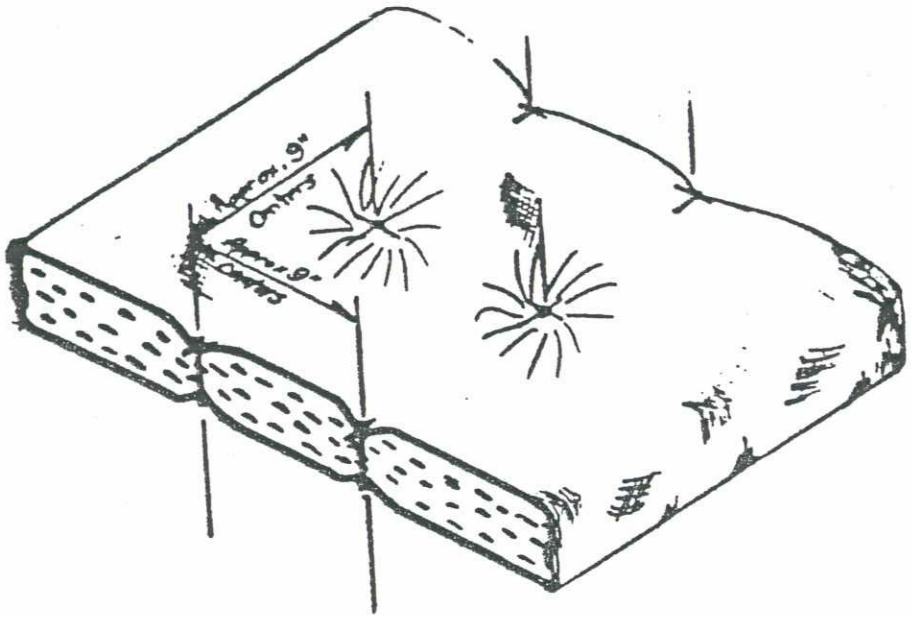

FIGURE 5

ISSUE DESIGNATION IN THIS COLI ..NDICATES CURRENT CHANGE

6.4 Fabricator Inspector

6.4.1 The fabricator shall assure that the completed wrap assembly conforms to the requirements specified on the applicable fabrication order.

6.4.2 This inspection by fabricator shall be in addition to verification by QC as defined in QCP-10002.

6.5 Identification Markings

6.5.1 Identification markings shall be placed on each wrap assembly at a minimum of two locations.

A) In close proximity to one of the lengthwise edges on the exposed surface.

B) In close proximity to one of the ends on the exposed surface.

C. Various project requirements may specify that this marking is also provided on the interior (non-fire) surface.

6.5.2 These markings shall be the blanket number as defined on the applicable fabrication order.

6.5.3 Markings shall be of a waterproof paint or ink which will retain the marking, withstand weathering deterioration, and other handling effects and shall not be deleterious to the fabric.

6.5.4 These markings shall be in characters no less than three-fourths (3/4") inches (19mm) high.

7.0 ATTACHMENTS

None

PROMATEC

PROGRESSIVE MATERIALS AND TECHNOLOGIES, INC.

PROCEDURE FOR:	PROCEDURE NUMBER:
INSTALLATION OF HEMYC PROTECTIVE WRAP SYSTEM ONTO SINGLE OR MULTIPLE CONDUITS	IP-8400.103

PROCEDURE ISSUE SUMMARY

ISSUE/DATE	PREPARER	APPROVED	COMMENTS
F ISSUE 01/25/95	L.C. Spriggs	R.J. Block	Revised as noted. Issue for use.
G ISSUE 08/16/95	L.C. Spriggs	R.J. Block	Revised as noted. Issue for use.

Page 214

ISSUE DESIGNATION IN THIS COLL .NDICATES CURRENT CHANGE

INSTALLATION OF
HEMYC PROTECTIVE WRAP SYSTEM
ONTO SINGLE OR MULTIPLE CONDUITS

1.0 PURPOSE

The purpose of this procedure is to assure that the installation of the HEMYC Protective Wrap System is consistent with the system as tested on the various qualification tests. The Fire Qualification Test, referenced as CTP-1026, consisted of a One (1) Hour Fire Exposure, per ASTM E-119 criteria, including hose stream test in accordance with the American Nuclear Insurers Information Bulletin No. 5(79) entitled, "ANI/MAERP Standard Fire Endurance Test Method to Qualify a Protective Envelope for Class IE Electrical Circuits".

2.0 SCOPE

This procedure provides the methods and guidelines to be utilized for the installation of HEMYC Protective Wrap Systems for conduits.

3.0 REFERENCE

3.1 10CFR50, Appendix R

3.2 ANI Bulletin 5(79)

3.3 IP-8400.101, Installation of HEMYC Protective Wrap System - Straight Sections of Cable Tray

3.4 IP-8400.102, Installation of HEMYC Protective Wrap System - Curved Sections of Cable Tray

3.5 QCP-10001, Packaging, Shipping, Receiving, Handling and Storage for HEMYC Protective Wrap Components

3.6 QCP-10002, Fabrication Inspection for HEMYC Protective Wrap Components

3.7 QCP-10003, Installation Inspection Criteria for HEMYC Protective Wrap Components

3.8 HEMYC Protective Cable Wrap System Typicals; PROMATEC Drawings B-310, B-311, B-312 and B-313

3.9 IP-8400.106, Installation of Fire Stops and Terminations Within the HEMYC Protective Wrap System for Cable Tray(s) and Conduits

ISSUE DESIGNATION IN THIS COLL INDICATES CURRENT CHANGE

4.0 DEFINITIONS

4.1 **CLIP** - sheet metal clip used to hold Wrap System onto finger strap.

4.2 **COLLAR** - a blanket used at wrap joints on conduit in place of wrap overlay.

4.3 **CONDUIT STANDOFF** - bracket used to allow two (2") inch airspace between conduit and blanket.

4.4 **FINGER STRAP** - thin, sheet metal strapping with pre-punched sections that may be bent out to provide anchoring for Wrap System.

4.5 **CLAMP/BANDING** - stainless steel or galvanized hose type clamp or banding. Hose clamps shall be a minimum gauge of .015" and a minimum width of one-half (1/2") inch.

4.6 **FLEX CONDUIT** - Non-rigid conduit that shall be covered using procedure IP-8400.112 for cable drops.

5.0 RESPONSIBILITIES

5.1 The authorized Installer's ENGINEERING DEPARTMENT shall be responsible to define the scope of work as prescribed on the applicable contract documents and provide the appropriate drawings, specifications, requirements, instructions, etc., to the department responsible for installation.

This department shall also be responsible to provide liaison with applicable client personnel and other internal departments to assure smooth flow of communication.

5.2 The authorized Installer's PRODUCTION DEPARTMENT shall be responsible for the identification and scheduling of work to be performed as defined on the documents furnished by ENGINEERING.

5.3 The Installers, as trained and certified by PROMATEC, shall be responsible for the performance of installation activities herein prescribed.

5.4 The Installer's QUALITY CONTROL PERSONNEL, as trained and certified by PROMATEC, shall be responsible for appropriate inspection, documentation and monitoring.

6.0 PROCEDURE

6.1 Stretch finger strapping along conduit to be protected and bend fingers out away from conduit.

6.2 Holding finger strapping against conduit, attach clamps on approximate eighteen (18") inch centers around conduit and tighten clamps. (See Figure 1.)

G 6.3 Impale wrap onto finger strap. Allow two (2") inch minimum between edge of wrap and fingers as shown on Figure 3.

6.4 Bring rest of wrap around conduit and impale edge of wrap onto fingers over the other edge. (See Figure 2.)

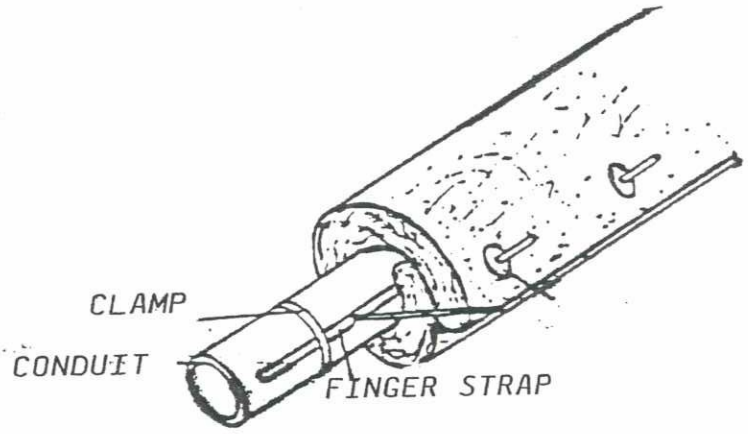

FIGURE 1

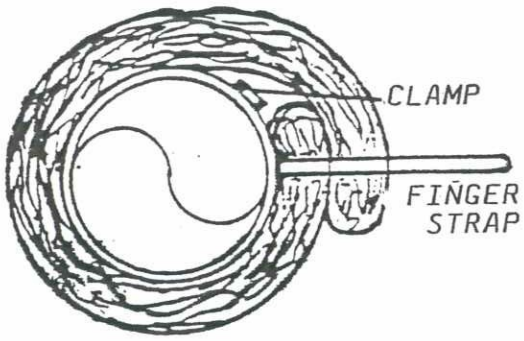

FIGURE 2

6.5 Attach clips onto fingers, compressing wrap approximately one-fourth to one-half (1/4" - 1/2") inch and bend finger over to secure blanket.

6.6 Multiple conduits are similar but only one conduit needs finger strapping. (Reference Figure 3.)

6.7 The number of conduits that may be wrapped is limited by wrap size. Large, bulky wrap sizes should be avoided due to difficulty in handling and possible damage.

If wrap sags excessively below conduit additional finger straps may be attached to centrally located conduits and used for additional wrap support.

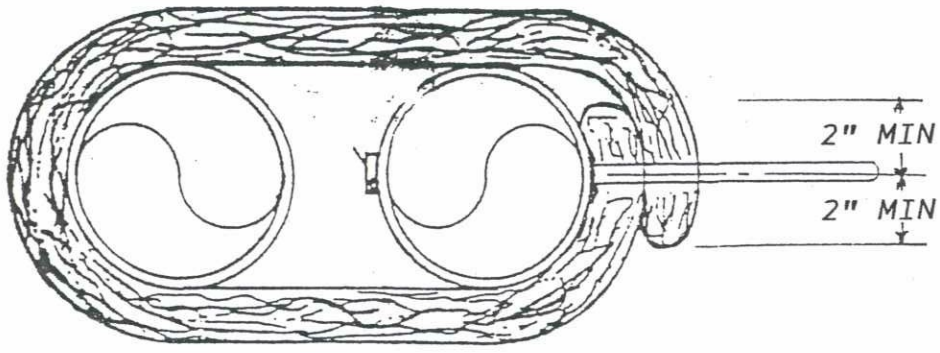

FIGURE 3

ISSUE DESIGNATION IN THIS COLI INDICATES CURRENT CHANGE

G

Page 217

ISSUE DESIGNATION IN THIS COLL INDICATES CURRENT CHANGE

G 6.8 An alternate method of wrap attachment is to place the wrap around the conduit ensuring that the proper overlap is achieved. The proper overlap is a MINIMUM of two (2") inches for the circumferences of conduits and collars as shown on Fig. 4B. Attach clamps around the wrap to secure wrap to conduit. Clamp spacing shall be placed on maximum nine (9") inch centers.

Tighten clamps until wrap is compressed one-fourth to one-half (1/4" - 1/2") inches. DO NOT OVER-TIGHTEN as distortion of the blanket will result.

If gaps occur at wrap overlap, loosen clamps, shift blanket as necessary and re-tighten clamps.

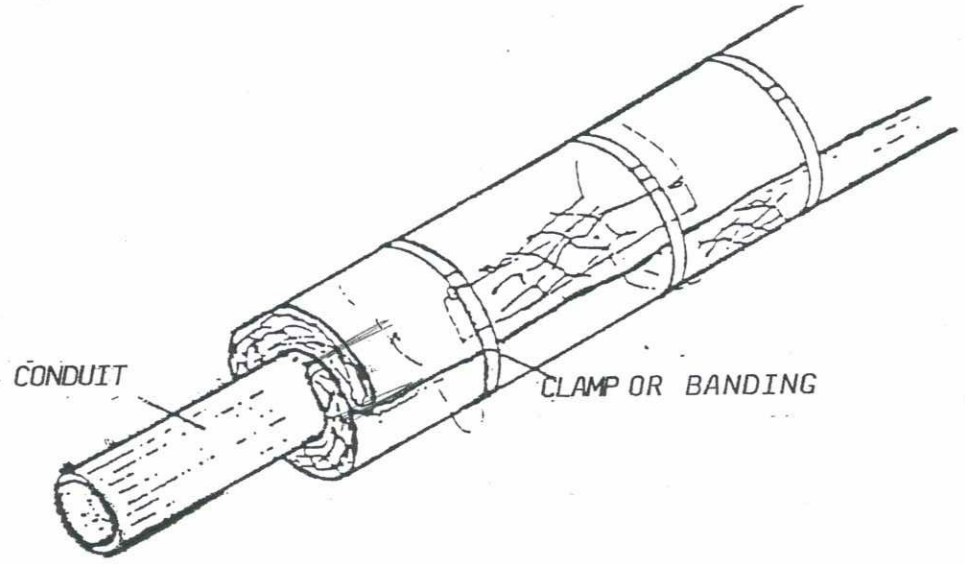

FIGURE 4A

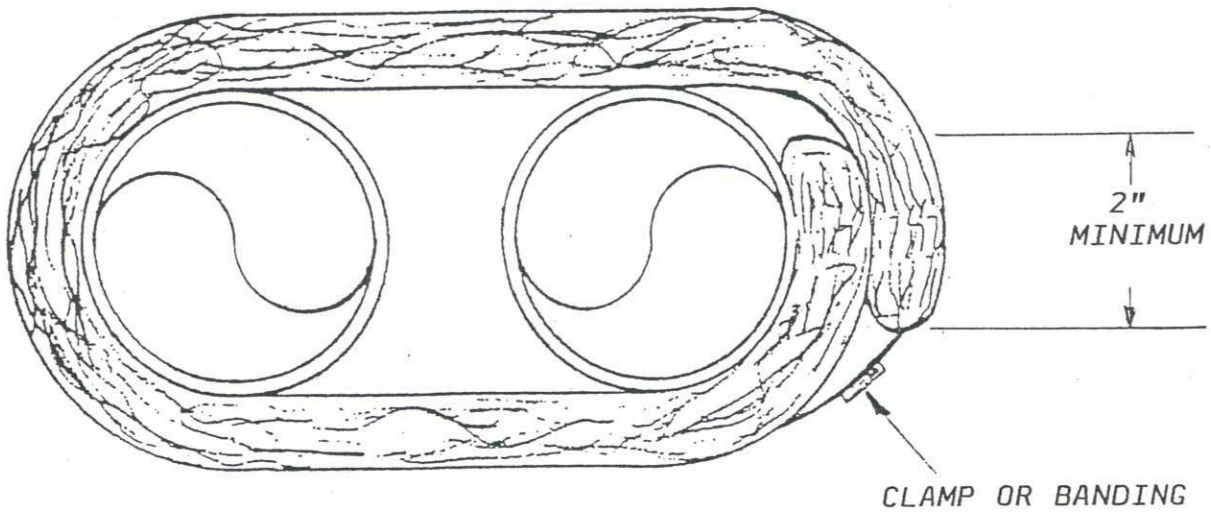

FIGURE 4B

ISSUE DESIGNATION IN THIS COLU INDICATES CURRENT CHANGE

6.9 In areas where ceiling, wall or floor clearances do not allow for wrap thickness, the wrap may be attached using methods and materials outlined in Procedure No. IP-8400.104, Section 6.3.

6.10 One of the two methods as shown in Figures 5 and 6 shall be outlined at wrap joints. Clamps or banding to secure should be installed as shown.

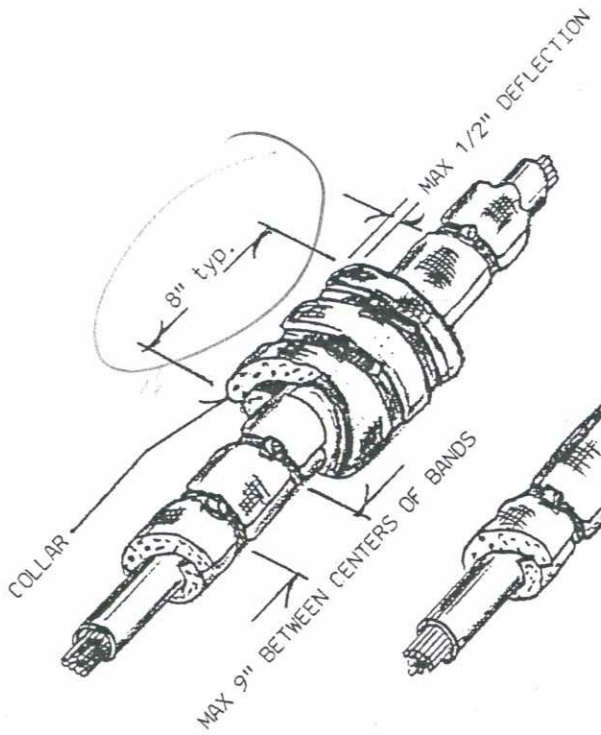

FIGURE 5
Typical Conduit Wrap
(Separate Wrap Style)

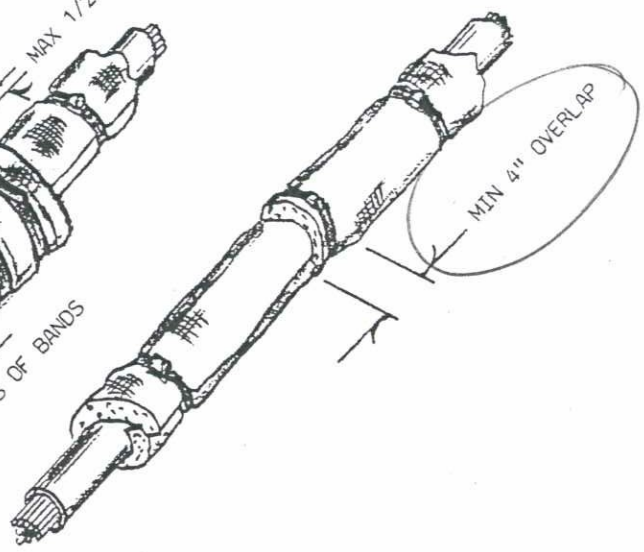

FIGURE 6
Typical Conduit Wrap
Joint Detail
(Overlap Type)

6.11 The following method is to be used where two (2") inch standoff bracket is required. Attach conduit standoff to conduit using all thread rod (See Figure 7). Use lock-washer and bolt to secure to conduit.

ISSUE DESIGNATION IN THIS COLL INDICATES CURRENT CHANGE

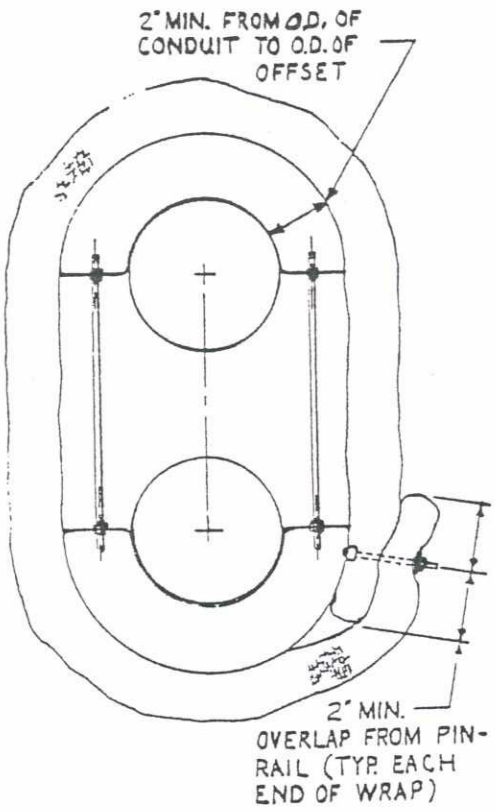

FIGURE 7

6.12 Conduit standoff are to be placed on maximum eighteen (18") inch centers. Attach rail and/or strut using bolts and lockwashers. Stud spacing is on nine (9") inch maximum centers (See Figure 8). Additional pin rail and/or strut may be used as determined by Installer's Site Engineer.

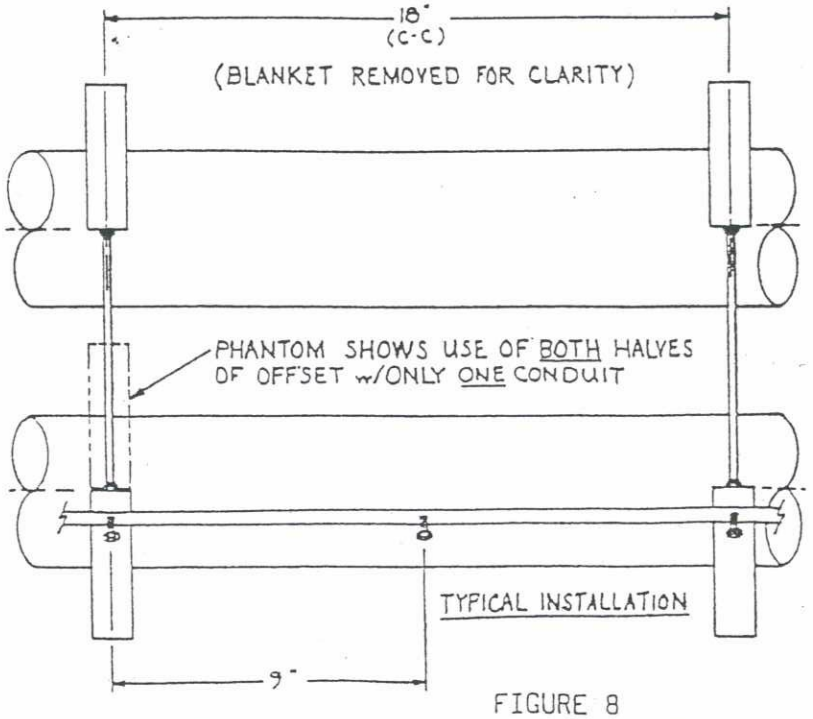

FIGURE 8

6.13 After framework is complete be sure to tighten all bolts.

6.14 Place blanket over studs allowing a minimum two (2") inch overlap from stud to edge of wrap. Bring wrap around standoff and impale edge of wrap onto studs. Allow minimum two (2") inch overlap from stud to edge of wrap. (See Figure 7.)

6.15 Use fender washer locknut to secure wrap to pin rail. Tighten locknut until wrap is compressed one-fourth to one-half (1/4" - 1/2") inch.

6.16 Use termination of system similar to procedure IP-8400.106, Section 6.3 Termination - Conduit (Floor, Ceiling or Wall).

7.0 ATTACHMENTS

7.1 ADDENDUM I

ISSUE DESIGNATION IN THIS COLL INDICATES CURRENT CHANGE

ADDENDUM I
ROCHESTER GAS & ELECTRIC
SITE SPECIFIC
GINNA STATION

4.5 **BANDING** - stainless steel banding shall be a minimum gauge of .015" and a minimum width of three-fourths (3/4") inches with wing seals.

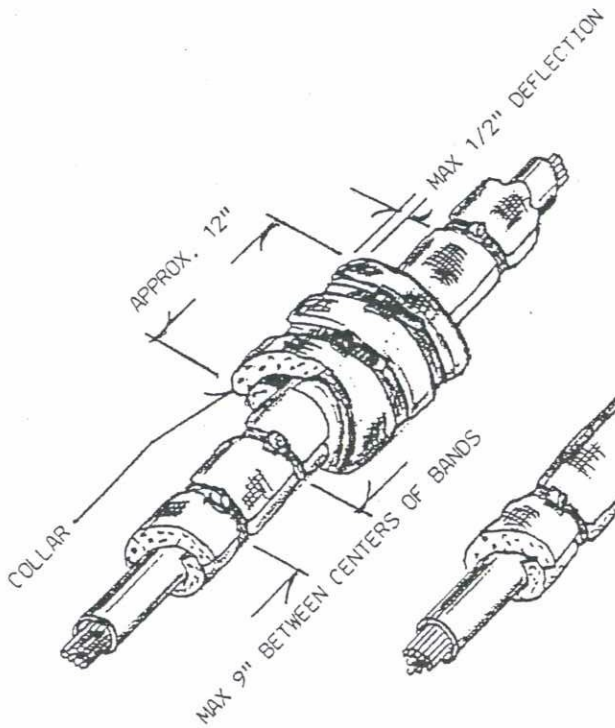

FIGURE 5a
Typical Conduit Wrap
(Separate Wrap Style)

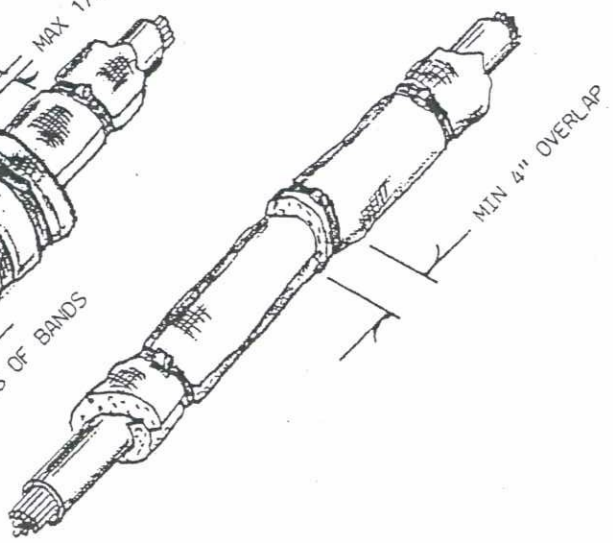

FIGURE 6a
Typical Conduit Wrap
Joint Detail
(Overlap Type)

ISSUE DESIGNATION IN THIS COLUMN INDICATES CURRENT CHANGE

CONTROL NO. CCN01

PROMATEC

PROGRESSIVE MATERIALS AND TECHNOLOGIES, INC.

PROCEDURE FOR:	PROCEDURE NUMBER:
REPAIR AND INSTALLATION OF HEMYC PROTECTIVE WRAP SYSTEM AROUND INTERFERENCES AND OBSTRUCTIONS	IP-8400.104

PROCEDURE ISSUE SUMMARY

ISSUE/DATE	PREPARER	APPROVED	COMMENTS
F ISSUE 01/25/95	L.C. Spriggs	R.J. Block	Revised as noted. Issue for use.

ISSUE DESIGNATION IN THIS COLUMN INDICATES CURRENT CHANGE

REPAIR AND INSTALLATION OF HEMYC PROTECTIVE WRAP SYSTEM AROUND INTERFERENCES AND OBSTRUCTIONS

1.0 PURPOSE

The purpose of this procedure is to assure that the installation of the HEMYC Protective Wrap System is consistent with the system as tested on the various qualification tests. The Fire Qualification Test, referenced as CTP-1026, consisted of a One (1) Hour Fire Exposure, per ASTM E-119 criteria, including hose stream test in accordance with the American Nuclear Insurers Information Bulletin No. 5(79) entitled "ANI/MAERP Standard Fire Endurance Test Method to Qualify a Protective Envelope for Class IE Electrical Circuits".

2.0 SCOPE

This procedure provides the methods and guidelines to be utilized for the repair and installation of the HEMYC Protective Wrap Systems around interferences and obstructions.

3.0 REFERENCE

3.1 10CFR50, Appendix R

3.2 ANI Bulletin No. 5(79)

3.3 HEMYC Test CTP-1026

3.4 QCP-10001, Packaging, Shipping, Receiving, Handling and Storage for the HEMYC Protective Wrap Components

3.5 QCP-10002, Fabric Inspection for HEMYC Protective Wrap Components

3.6 QCP-10003, Installation Inspection Criteria for HEMYC Protective Wrap Components

3.7 HEMYC Protective Cable Wrap System Typicals, PROMATEC Drawings B-310, B-311, B-312 and B-313.

4.0 DEFINITIONS

4.1 **CONCRETE ANCHORS** - site approved anchors such as HILTI or Phillips Wedge Anchors used to hold blanket to walls, ceiling or partitions.

4.2 **NEEDLE** - a needle, curved or straight, capable of handling the thread type noted in these definitions.

4.3 **PLUMBERS TAPE** - flexible metal strip having pre-punched holes running the length

ISSUE DESIGNATION IN THIS COLUMN INDICATES CURRENT CHANGE

of the attached wrap.

4.4 **RETAINER STRAP** - rigid metal strip having pre-punched holes running the length of the attached blanket.

4.5 **THREAD** - fire and heat resistant, quartz type thread such as Alpha Quartz Q-24.

5.0 RESPONSIBILITIES

5.1 The authorized Installer's ENGINEERING DEPARTMENT shall be responsible to define the scope of work as prescribed on the applicable contract documents and provide the appropriate drawings, specifications, requirements, instructions, etc., to the department responsible for installation.

This department shall also be responsible to provide liaison with applicable client personnel and other internal departments to assure smooth flow of communications.

5.2 The authorized Installer's PRODUCTION DEPARTMENT shall be responsible for the identification and scheduling of work to be performed as defined on the documents furnished by ENGINEERING.

F 5.3 The Installers, as trained and certified by PROMATEC, shall be responsible for the performance of installation activities herein prescribed.

F 5.4 The Installer's QUALITY CONTROL PERSONNEL, as trained and certified by PROMATEC, shall be responsible for appropriate inspection, documentation, and monitoring.

6.0 PROCEDURE

6.1 Penetrating Members

6.1.1 Cut affected wrap to a depth sufficient to allow the wrap to be installed around the penetrating member (See Figure 1).

6.1.2 Using quartz thread and proper needle (curved needle suggested), sew the inner portion of the wrap (Siltemp or fiberglass) together around the penetrating member.

6.1.3 Fill any gaps in the ceramic fiber fill with additional fiber and sew the outer Siltemp material together (See Figure 2). Stitches shall be no more than one-half (1/2") inch apart.

6.1.4 Fill any gaps around the penetrating member with ceramic fiber.

F 6.1.5 Cut a four (4") inch wide piece of ceramic blanket and place around the penetrating member with a one to two (1" - 2") inch overlap at the ends. (See Figure 3).

F 6.1.6 A slightly larger section of Siltemp shall be placed over the ceramic blanket and sewn top, sides and bottom to tightly seal the Wrap System (See Figure 4). Stitches shall be no more than one-half (1/2") inch apart. Seal shall be accomplished by sewing/banding the blanket in place. Interfering cable trays may be wrapped as described in Procedure IP-8400.106, Sections 6.1.2

through 6.1.5.

6.1.7 It may not be possible in all cases to get the Siltemp cloth tight against the penetrating member. In these cases ensure that the ceramic blanket is forced tightly against the penetrating member by the Siltemp to prevent flame and/or heat passage into system. Clamps may be used to accomplish this, as necessary.

F 6.1.8 All supports and interferences shall be protected a minimum of four (4") inches measured linearly from the structure being protected.

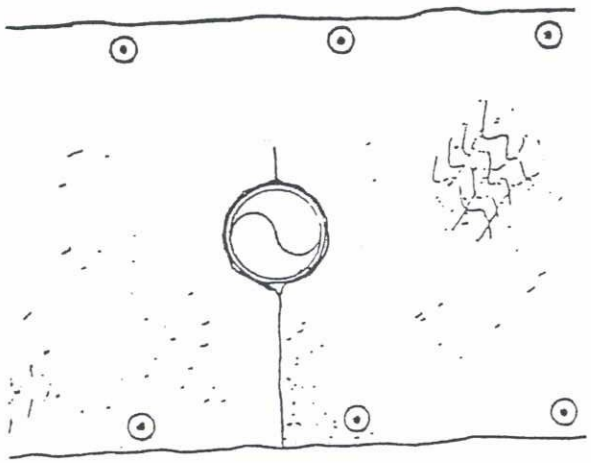

FIGURE 1

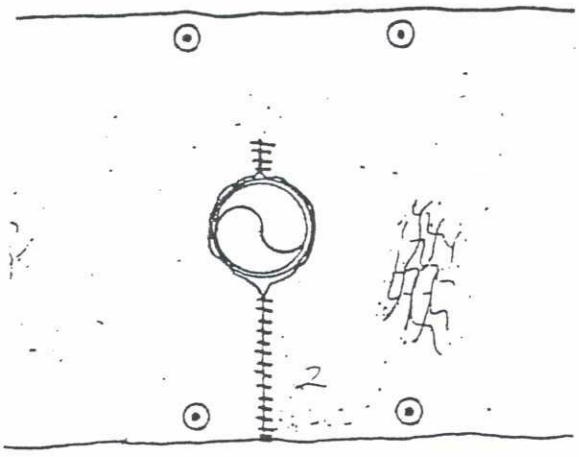

FIGURE 2

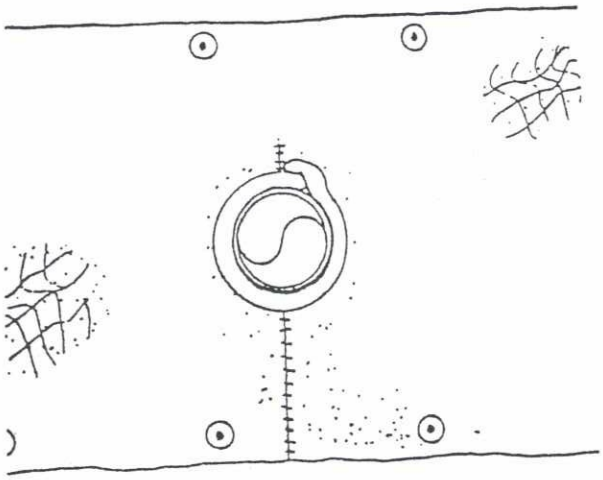

FIGURE 3

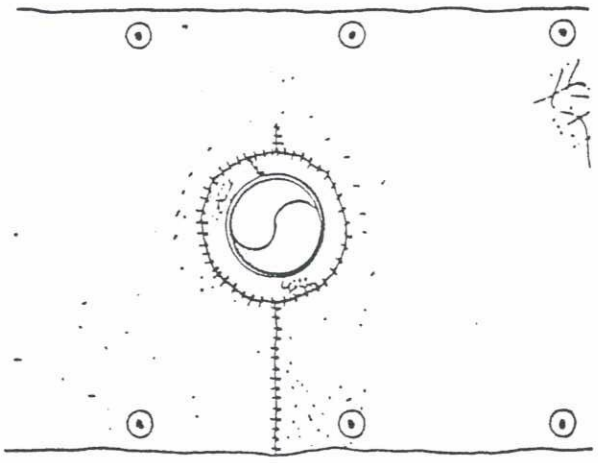

FIGURE 4

6.2 Adjoining or Supporting Members

ISSUE DESIGNATION IN THIS COLUMN INDICATES CURRENT CHANGE

F

6.2.1 If possible the adjoining or supporting member should be encapsulated within the system using the procedure outlined in Section 6.1 to seal any openings. (See Figure 5.) In addition, these interfering members may have pin rail banded to them to help secure the wrap. This configuration may be substituted for pin rail studs where top and/or bottom rails meet these interfering members, maintaining nine (9") inch maximum spacing between adjacent pin rail studs. All stud spacings are as measured along the rail.

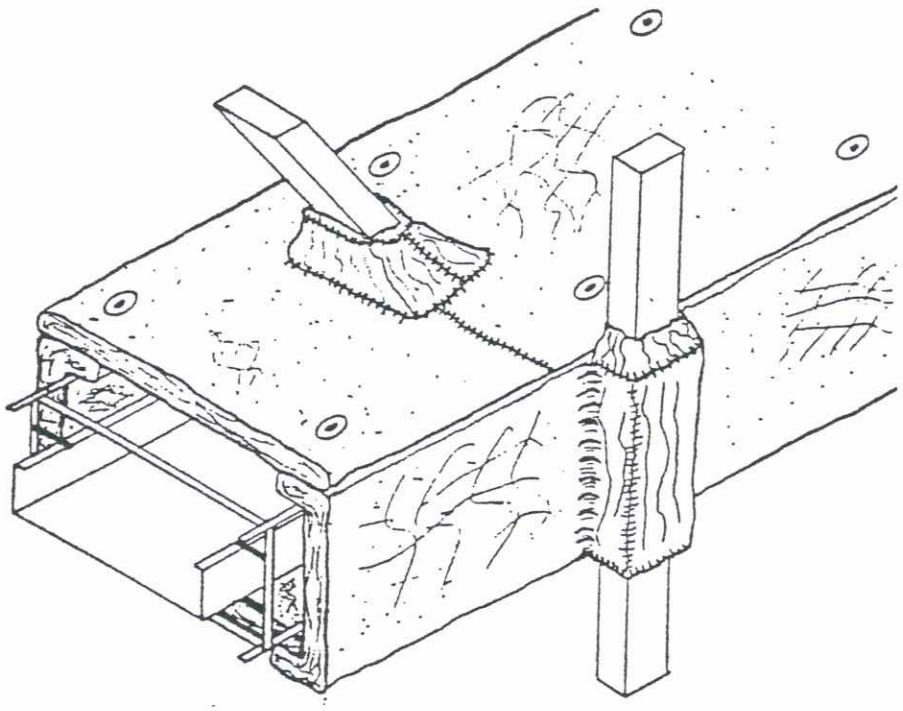

FIGURE 5

6.2.2 Where, due to size, shape or location, the adjoining or supporting member cannot be encapsulated, the Installer's Site Engineer shall determine alternate methods on a case by case basis. Client's Engineer or authorized representative shall review alternate methods, as required. Such alternates shall be within the parameters established by the HEMYC fire testing.

6.3 Wall, Ceiling or Floor Interferences

6.3.1 Where walls, ceilings or floors prevent the installation of the full system, the wraps may be installed as shown in Figure 6. Extra wrap supports may be required as determined by the Installer's Site Engineer.

6.3.2 Framework shall be attached to the interfering surface using concrete anchors and L-Brackets #B-6102 as shown in Figure 6.

ISSUE DESIGNATION IN THIS COLUMN INDICATES CURRENT CHANGE

ISSUE DESIGNATION IN THIS COLUMN INDICATES CURRENT CHANGE

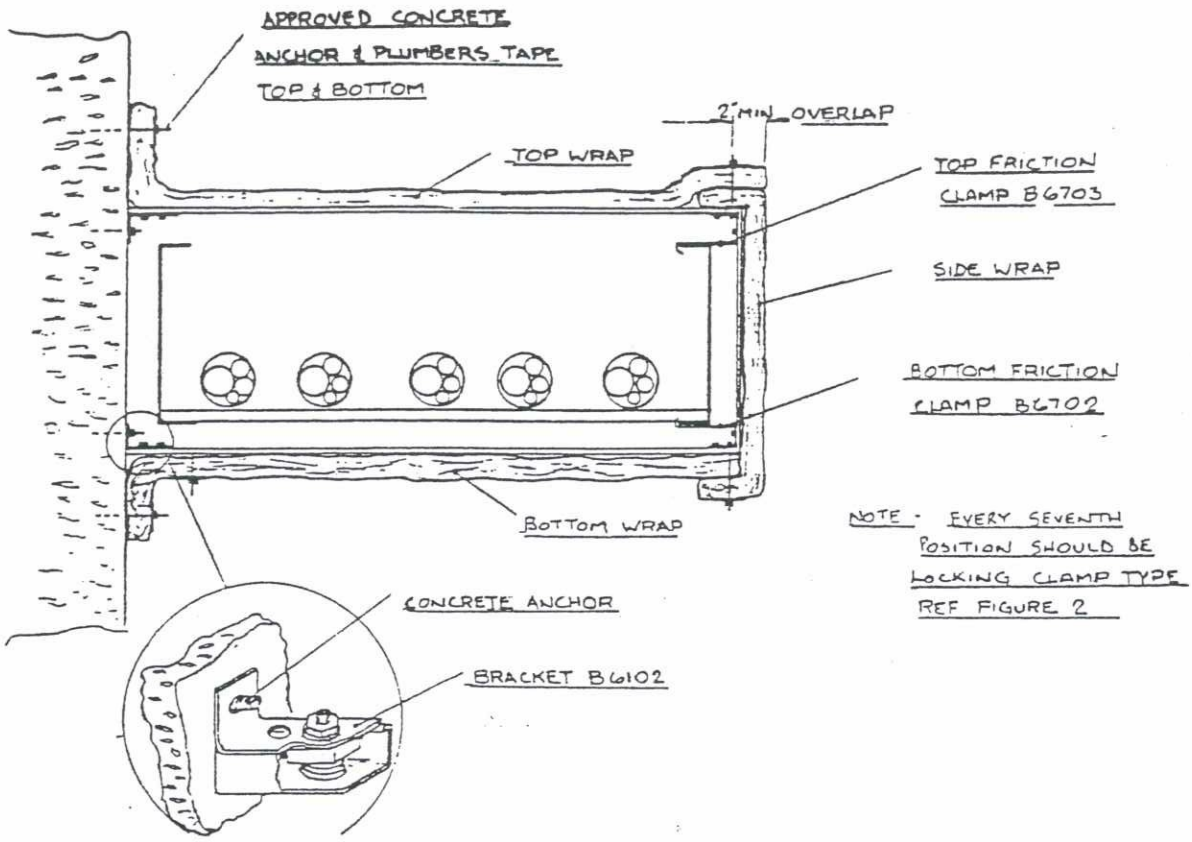

FIGURE 6

6.3.3 Concrete anchors for wrap shall be placed no more than nine (9") inches apart.

6.3.4 Plumbers tape or retainer strap must be installed in the areas where the Wrap System is attached to a wall or ceiling. The plumbers tape or retainer strap is to be installed over the studs after the blanket is installed and prior to the fender washer and locknut. (See Figure 7.) Tape should be kept as tight as possible to prevent the wrap from sagging away from the wall creating a passage for heat and/or flame. Additional holes in plumbers tape or retainer strap may be made as necessary to accommodate variations in stud placement.

F 6.3.5 Where the Wrap System is to be attached to a termination surface (e.g., wall, floor, ceiling, adjoining structure), pin rail may be mounted as an alternative to installing multiple anchor studs.

To attach pin rail to the surface:

- Install a strip of ceramic blanket as a "gasket", between the pin rail and the surface. This blanket strip shall be one-fourth to one-half (1/4" - 1/2") inch thick and at least twice as wide as the rail.

- At least one (1) anchoring stud shall be located at each end of the pin rail.

ISSUE DESIGNATION IN THIS COLUMN INDICATES CURRENT CHANGE
F

Install the end studs one-half (1/2") inches to five (5") inches O.C. from each end.

- For pin rail up to twenty-four (24") inches long use a minimum of two (2) anchoring studs; one at each end.

- For pin rail twenty-five (25") inches to sixty (60") inches long, use a minimum of three (3) studs; each end and one in the approximate middle.

- For pin rails sixty-one (61") inches to one hundred twenty (120") inches long, use a minimum of four (4) studs; each end and another two approximately evenly spaced between the end anchoring studs.

NOTE: Anchoring studs may be site approved concrete anchors, 1/4-20 through-bolts or other engineering approved fasteners.

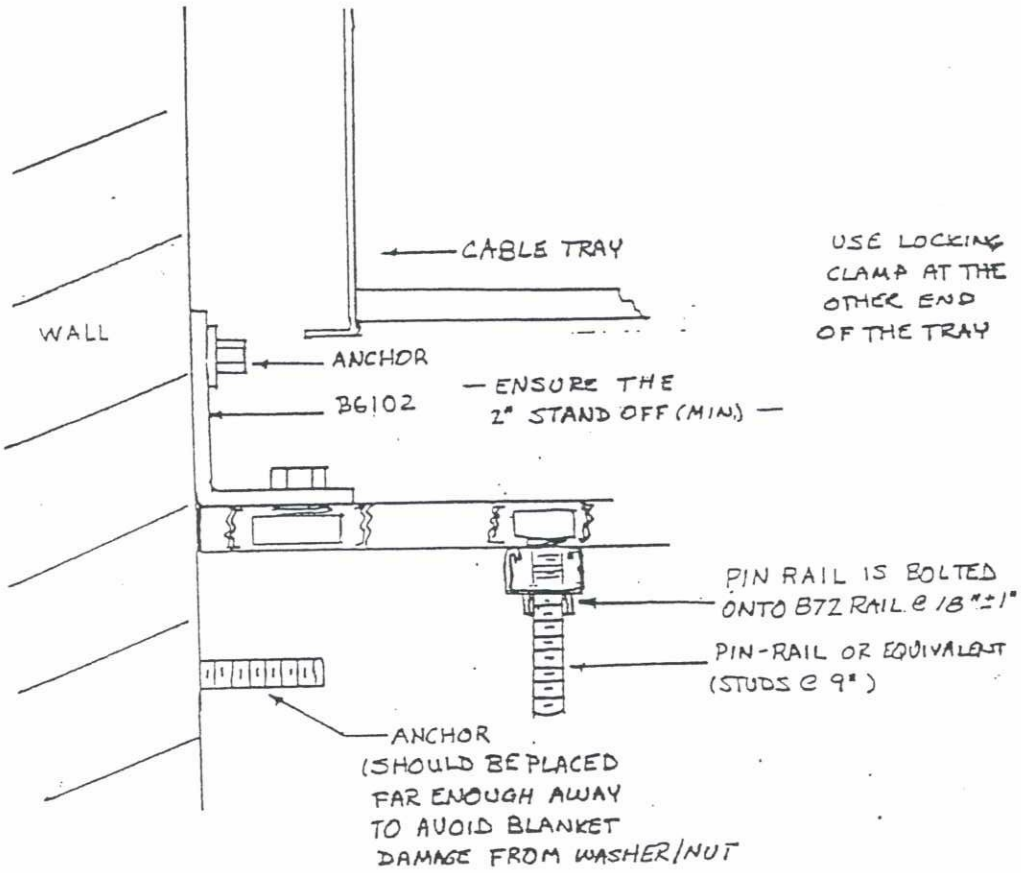

NOTE: IT IS SUGGESTED THAT LOCK WASHERS AND NUTS BE USED ON THE ANCHORS RATHER THAN LOCKNUTS, TO AVOID OVER TORQUING OF ANCHORS

FIGURE 6A
TRAY MOUNTING DETAIL
WALL TO WALL WRAP
BOTTOM SECTION

ISSUE DESIGNATION IN THIS COLUMN INDICATES CURRENT CHANGE

F

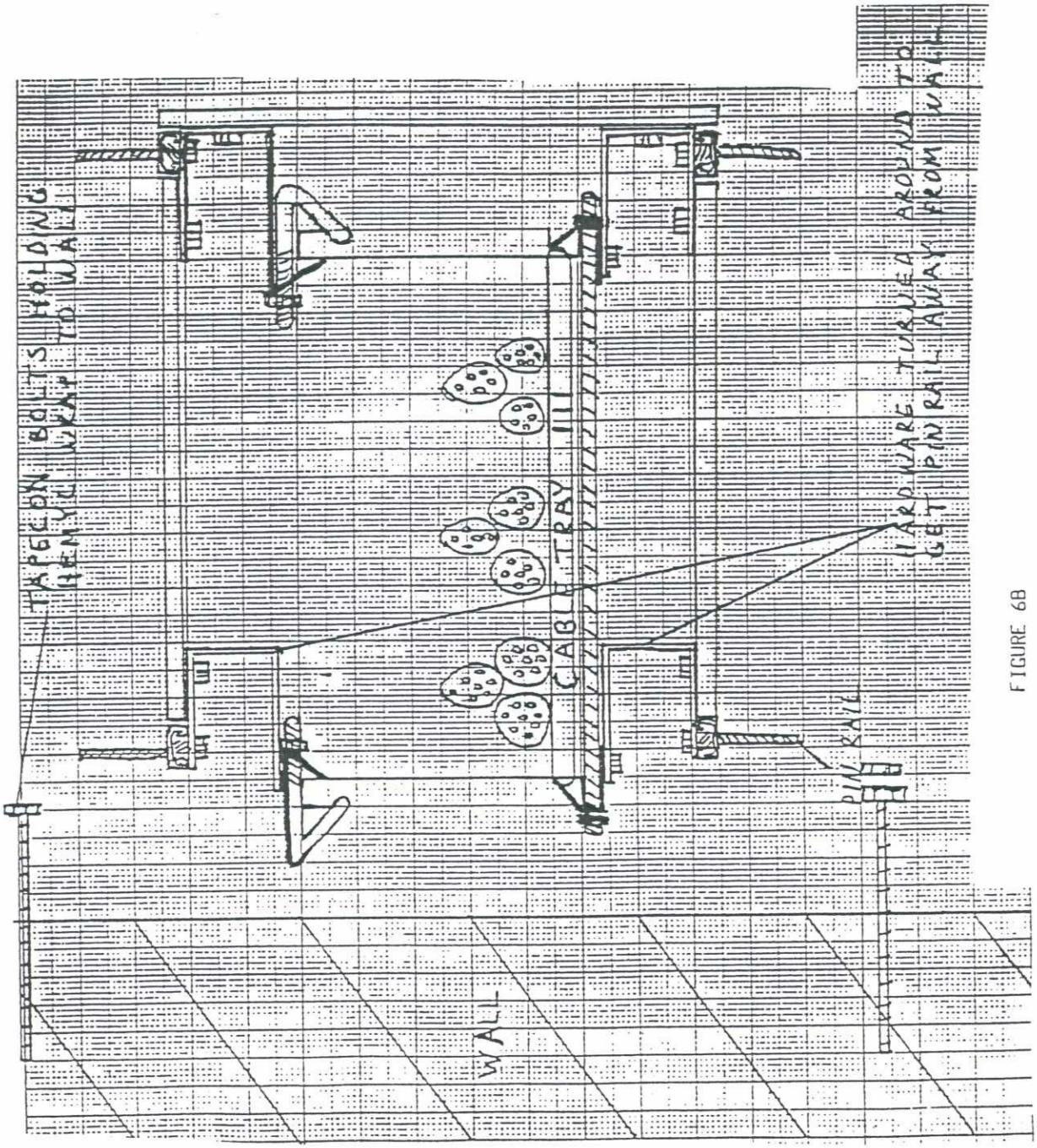

FIGURE 6B

ISSUE DESIGNATION IN THIS COLU DICATES CURRENT CHANGE

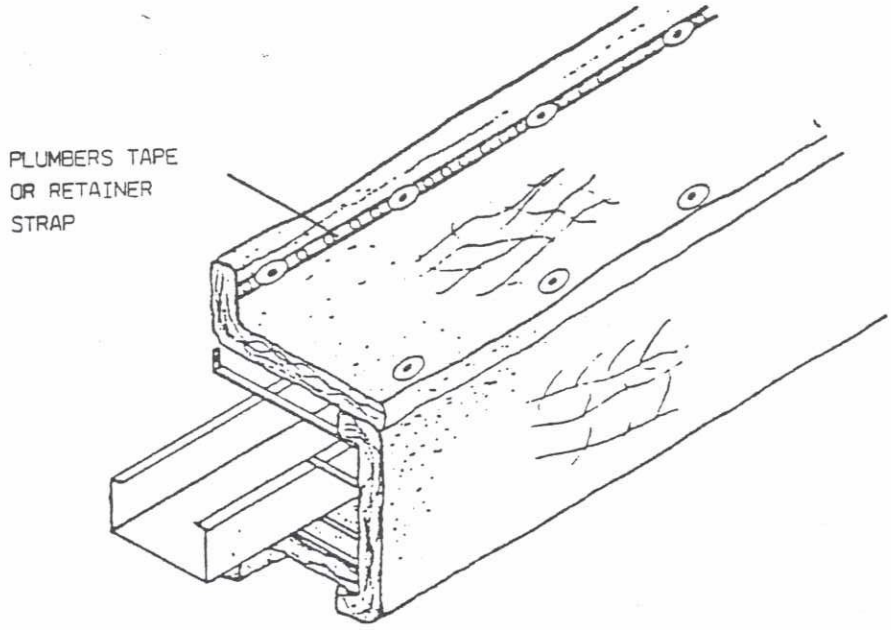

FIGURE 7

6.4 Repair Procedure

6.4.1 Responsible parties shall inspect damaged wrap to determine the extent of damage and if repair or replacement is required. Order replacement wrap if damage is extensive.

6.4.2 Remove damaged wrap to work area.

6.4.3 Replace any damaged or deformed framework/support materials utilizing methods outlined in PROMATEC Installation Procedures IP-8400.101, IP-8400.102 and/or IP-8400.103.

6.4.4 Rips

6.4.4.1 Sew the interior fabric, if necessary, the full length of the ripped fabric with stitches no more than one-half (1/2") inch apart. Extra stitches will need to be added to each end of rip to ensure that the rip does not "creep".

6.4.4.2 Replace any ceramic fiber lost due to damage. Ensure that no gaps remain in fiber filler and that proper thickness is maintained.

6.4.4.3 Sew the exterior fabric together as outlined in Section 6.4.4.1. If any gaps are found in fabric it may be necessary to insert an appropriately sized piece of fabric inside the system prior to sewing fabric closed.

6.4.4.4 Reinstall wrap as outlined in PROMATEC Procedure IP-8400.101.

6.4.5 Holes or Large Tears

ISSUE DESIGNATION IN THIS COLUMN INDICATES CURRENT CHANGE

6.4.5.1 Patches of the proper type fabric, Siltemp or fiberglass, should be cut to a size sufficient to cover the hole with an approximate two (2") inch overlap onto undamaged fabric

6.4.5.2 Repair the interior surface first, if necessary, by placing patch over hole and sewing around the perimeter of patch with stitches no more than one-half (1/2") inch apart.

6.4.5.3 Replace any ceramic fiber as necessary. Ensure that no gaps remain and that proper thickness is maintained.

6.4.5.4 Place the exterior patch over the hole and sew as noted in Section 6.4.5.2. (See Figure 8.)

6.4.5.5 Reinstall wrap as outlined in PROMATEC Procedure IP-8400.101, using new locknuts on studs.

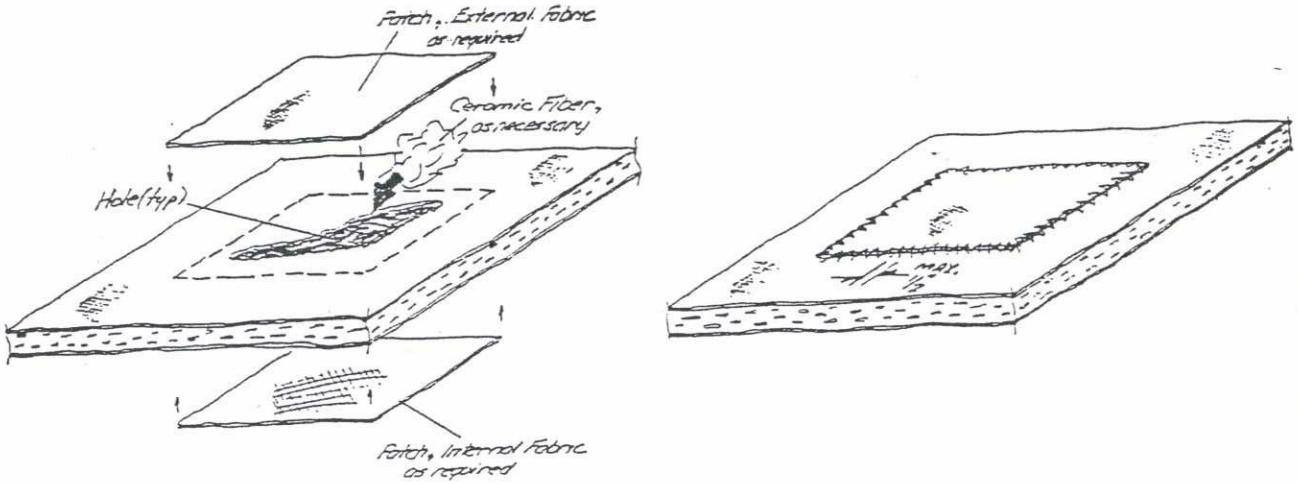

FIGURE 8

7.0 ATTACHMENTS

None

ISSUE DESIGNATION IN THIS COLUMN INDICATES CURRENT CHANGE

INSTALLATION OF HEMYC PROTECTIVE WRAP SYSTEM ONTO CABLE DROPS

1.0 PURPOSE

The purpose of this procedure is to assure that the installation of the HEMYC Protective Wrap System is consistent with the system as tested on the various qualification tests. The Fire Qualification Test, referenced as CTP-1026, consisted of a One (1) Hour Fire Exposure, per ASTM E-119 criteria, including hose stream test in accordance with the American Nuclear Insurers Information Bulletin 5(79) entitled, "ANI/MAERP Standard Fire Endurance Test Method to Qualify a Protective Envelope for Class IE Electrical Circuits",

2.0 SCOPE

C This procedure provides the methods and guidelines to be utilized for the installation of HEMYC Protective Wrap Systems onto cable drops.

3.0 REFERENCE

3.1 10CFR50, Appendix R

3.2 ANI Bulletin 5(79)

3.3 IP-8400.103, Installation for HEMYC Protective Wrap System - Onto Single or Multiple conduits

3.4 IP-8400.104, Installation for HEMYC Protective Wrap System - Around Interferences and Obstructions.

3.5 IP-8400.106, Installation for HEMYC Protective Wrap System for Cable Tray(s) and Conduit

C 3.6 QCP-10001, Packaging, Shipping, Receiving, Handling and Storage for HEMYC Protective Wrap Components

C 3.7 QCP-10002, Fabrication Inspection for HEMYC Protective Wrap Components

C 3.8 QCP-10003, Installation Inspection Criteria for HEMYC Protective Wrap Components

4.0 DEFINITIONS

4.1 **CLIP** - stainless steel metal clip used to hold banding in place.

C 4.2 **COLLAR** - a blanket used at wrap joints on conduit and/or cable wrap in place of wrap overlap.

C 4.3 **CLAMP** - stainless steel or galvanized hose type clamp or stainless steel banding.

ISSUE DESIGNATION IN THIS COLUMN INDICATES CURRENT CHANGE

C 4.4 **STRIP** - ceramic blanket sufficiently thick to achieve two (2") inches air space between cable and blanket wrap.

C 4.5 **WRAP** - a fireproof product consisting of ceramic fiber material sewn into an envelope of fireproof fabric.

5.0 RESPONSIBILITIES

5.1 The authorized Installer's ENGINEERING DEPARTMENT shall be responsible to define the scope of work as prescribed on the applicable contract documents and provide the appropriate drawings, specifications, requirements, instructions, etc., to the department responsible for installation.

C This department shall also be responsible to provide liaison with applicable client personnel and other internal departments to assure smooth flow of communication.

C 5.2 The authorized Installer's PRODUCTION DEPARTMENT shall be responsible for the identification and scheduling of work to be performed as defined on the documents furnished by Engineering.

C 5.3 The Installers, as trained and certified by PROMATEC, shall be responsible for the performance of installation activities herein prescribed.

C 5.4 The Installer's QUALITY CONTROL PERSONNEL, as trained and certified by PROMATEC, shall be responsible for appropriate inspection, documentation and monitoring.

6.0 PROCEDURE

C 6.1 Cut ceramic fiber blanket sufficiently thick to achieve two (2") inch air space in approximately three (3") inch wide strips, place around cable(s) and secure, space the three (3") inch wide strips on maximum nine (9") inch centers. A minimum of two (2") inch air space is required between cable and blanket wrap.

C 6.2 Additional three (3") inch wide ceramic fiber blanket sufficiently thick to achieve two (2") inch air space may be utilized in order to maintain two (2") inch air space.

C 6.3 Place minimum one and one-half (1-1/2") inch blanket wrap around three (3") inch wide strips and cable. Banding to be placed around blanket wrap at point over three (3") inch wide strip. Blanket must overlap a minimum of three (3") inches. Outside (blanket wrap band) banding is to be placed over the three (3") inch wide strips only.

Tighten banding until blanket is compressed one-fourth to one-half (1/4" - 1/2") inch. DO NOT OVER-TIGHTEN.

6.4 At blanket wrap joints, or overlap, a two (2") inch ceramic fiber blanket cut in approximate six (6") inch wide strip should be used around cable. See IP-8400.103, Section 6.9 for detail of blanket wrap.

6.5 For termination to wall, floor or ceiling, use IP-8400.106 Conduit.

6.6 For Cable Drops into Cable Tray Wrap System, use IP-8400.104, Section 6.1 Penetrating Member.

7.0 ATTACHMENTS

7.1 Drawing B-272.11, HEMYC System Cable Drop with Air Space

ISSUE DESIGNATION IN THIS COLU .DICATES CURRENT CHANGE

NOTE:
Prefabricated blanket section dimensions determined by installers on a case by case basis. SILTEMP and fiberglass to be sewn with fire retardant Astroquartz or similar thread.

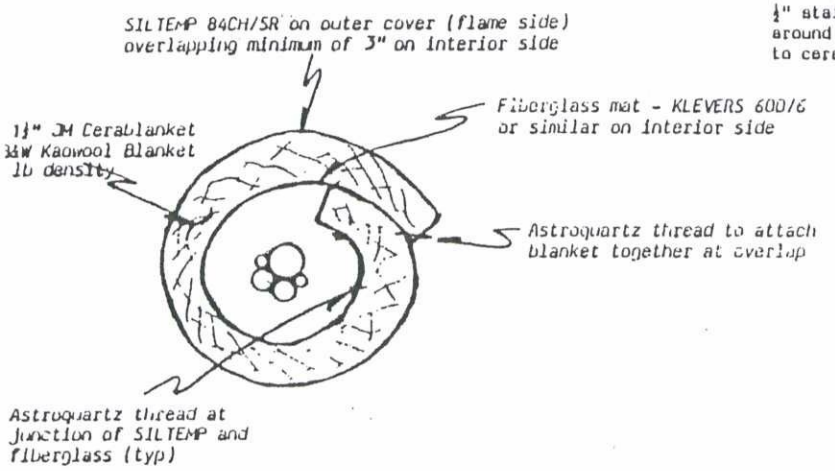

SECTION C-C
CABLE DROP W/ AIR SPACE
(TEST TWO)

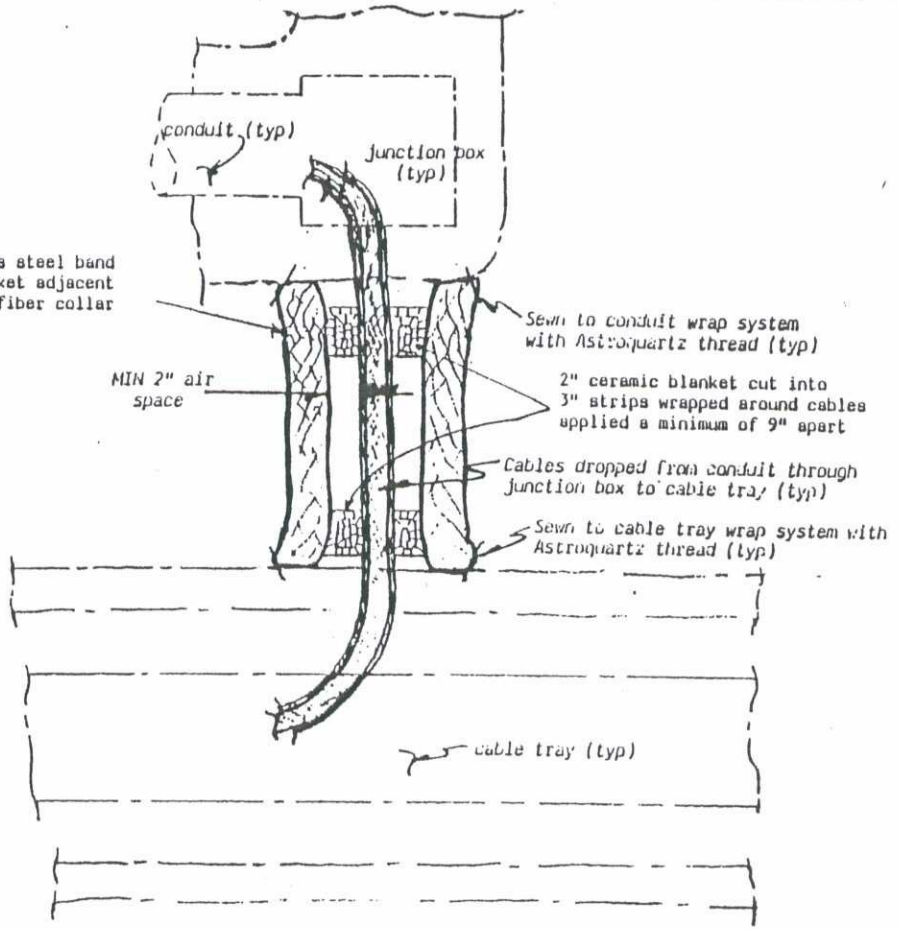

TYPICAL INSTALLATION
OF CABLE DROP W/ AIR SPACE

REVISIONS			
NO	DATE	BY	
1	3-30-84	KWS	
2			
3			
4			
5			

INSULATION, INC.

HEMYC SYSTEM
CABLE DROP W/ AIR SPACE

DRAWN BY LCS	SCALE nts	MATERIAL as noted
CHK'D	DATE 7/19/82	DRAWING NO
TRACED BLL	APP'D	B - 272.11

ISSUE DESIGNATION IN THIS COLUMN INDICATES CURRENT CHANGE

INSTALLATION OF HEMYC PROTECTIVE WRAP SYSTEM TO JUNCTION BOXES AND SIMILAR EQUIPMENT

1.0 PURPOSE

The purpose of this procedure is to assure that the installation of the HEMYC Protective Wrap System is consistent with the system as tested in the various qualification tests. The Fire Qualification Test, referenced as CTP-1026, consisted of a One (1) Hour Fire Exposure, per ASTM E-119 criteria, including hose stream test in accordance with the American Nuclear Insurers Information Bulletin No. 5(79) entitled, "ANI/MAERP Standard Fire Endurance Test Method to Qualify a Protective Envelope for Class IE Electrical Circuits."

2.0 SCOPE

This procedure provides the methods and guidelines to be utilized for the installation of Protective Wrap Components to electrical junction boxes and similar equipment.

3.0 REFERENCE

3.1 10CFR50, Appendix R

3.2 ANI Bulletin No. 5(79)

3.3 HEMYC Test CTP-1026

3.4 IP-8400.101, Installation Procedure for HEMYC Protective Wrap System - Straight Sections

3.5 QCP-10001, Packaging, Shipping, Receiving, Handling, and Storage for HEMYC Protective Wrap Components

3.6 QCP-10002, Fabrication Inspection for HEMYC Protective Wrap Components

3.7 QCP-10003, Installation Inspection Criteria for HEMYC Protective Wrap Components

3.8 HEMYC Protective Cable Wrap System Typicals, PROMATEC Drawings B-310, B-311, B-312 and B-313.

4.0 DEFINITIONS

None

5.0 RESPONSIBILITIES

5.1 The authorized Installer's ENGINEERING DEPARTMENT shall be responsible to define the scope of work as prescribed on the applicable contract documents and provide the appropriate drawings, specifications, requirements, instruction, etc., to the department responsible for installation.

This department shall also be responsible to provide liaison with applicable client personnel and other internal departments to assure smooth flow of communication.

5.2 The authorized Installer's PRODUCTION DEPARTMENT shall be responsible for the identification and scheduling of work to be performed as defined on the documents furnished by ENGINEERING.

C 5.3 The Installers, as trained and certified by PROMATEC, shall be responsible for the performance of installation activities herein prescribed.

C 5.4 The Installer's QUALITY CONTROL PERSONNEL shall be responsible for appropriate inspection, documentation, and monitoring.

6.0 PROCEDURE

6.1 Layout of Wrap

6.1.1 The Installer's Site Engineer shall take exterior measurements of the junction boxes to be protected and develop a pattern similar to the pattern shown in Figure 1. An alternate method would be to develop pieces that could be sewn as shown in Figure 2.

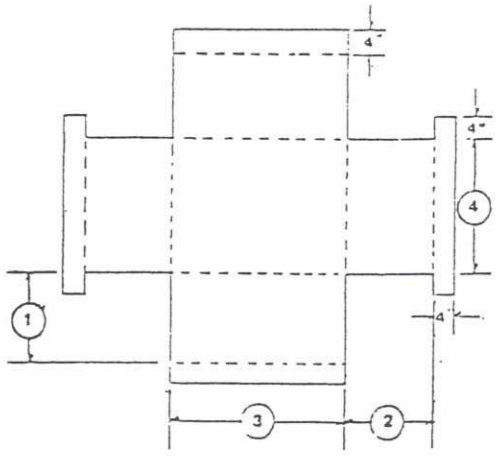

FIGURE 1

ISSUE DESIGNATION IN THIS COLU NDICATES CURRENT CHANGE

ISSUE DESIGNATION IN THIS COLL .DICATES CURRENT CHANGE

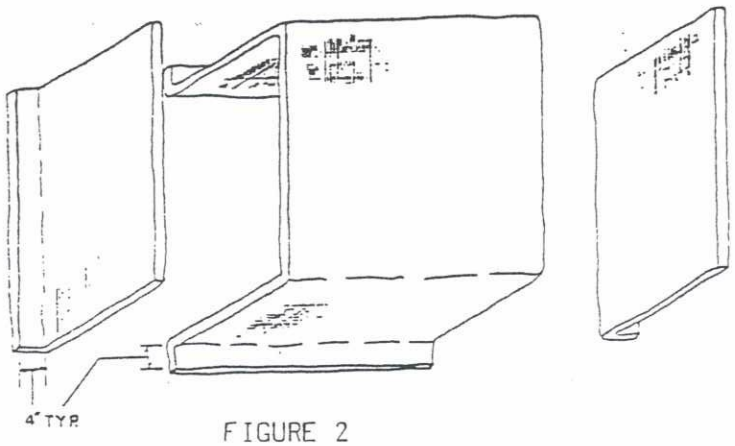

FIGURE 2

6.1.2 Dimensions #1, 2 and 3 on Figure 1 should be increased four (4") inches from junction box dimensions to allow for wrap thickness.

6.1.3 Note on Figures 1 and 2 that approximately four (4") inches is allowed at ends to overlap onto surface for attachment.

6.1.4 The Installer's Site Engineer should ensure that sufficient material allowances are made on all patterns to provide for overlap at corners of junction box.

6.2 Installation

6.2.1 Wrap System may be installed as shown in Figure 3 for floor, wall or ceiling mounting or as shown in Figure 4 in the case of free standing equipment.

FIGURE 3

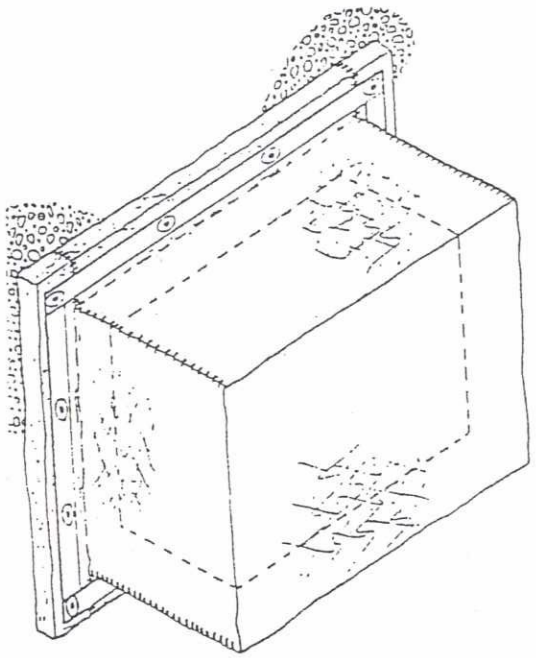

ISSUE DESIGNATION IN THIS COLU NDICATES CURRENT CHANGE

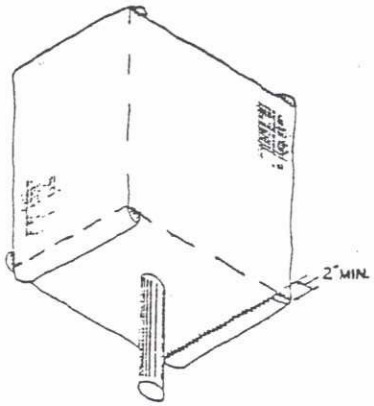

FIGURE 4

6.2.2 For equipment that will require frequent access, a framework may be used as shown in Figure 5 to provide ease of system removal.

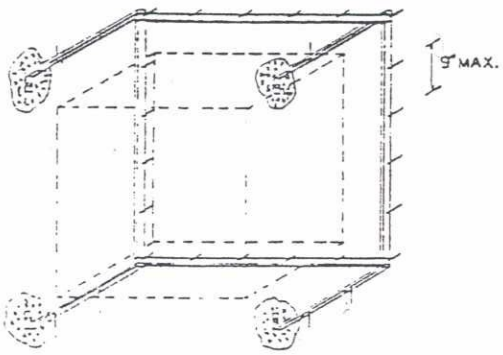

FIGURE 5

6.2.3 Concrete anchors used for floor, wall or ceiling installation shall be placed as determined by the Installer's Site Engineer.

6.2.4 Mounting of wrap to floor, wall or ceiling shall be done similar to that described in Procedure IP-8400.104.

6.2.5 All sewing shall be done in accordance with the requirements of Procedure IP-8400.104.

? even with stand-of

6.2.6 Ensure that no gaps exist in Wrap System. Minimum thickness of wrap at all points is two (2") inches. Fill as necessary with ceramic blanket to maintain minimum thickness.

7.0 ATTACHMENTS

None

PROMATEC

PROGRESSIVE MATERIALS AND TECHNOLOGIES, INC.

PROCEDURE FOR:	PROCEDURE NUMBER:
INSTALLATION OF HEMYC PROTECTIVE WRAP SYSTEM - STRAIGHT SECTIONS OF CABLE TRAY	IP-8400.101

PROCEDURE ISSUE SUMMARY

ISSUE/DATE	PREPARER	APPROVED	COMMENTS
G ISSUE 01/25/95	L.C. Spriggs	R.J. Block	Revised as noted. Issue for use.

ISSUE DESIGNATION IN THIS COLUMN INDICATES CURRENT CHANGE

INSTALLATION OF HEMYC PROTECTIVE WRAP SYSTEM STRAIGHT SECTIONS OF CABLE TRAY

1.0 PURPOSE

The purpose of this procedure is to assure that the installation of the HEMYC Protective Wrap System is consistent with the system as tested on various qualification tests. The Fire Qualification Test, referenced as PROMATEC CTP-1026, consisted of a One (1) Hour Fire Exposure, per ASTM E-119 criteria, including hose stream test in accordance with the American Nuclear Insurers Information Bulletin No. 5(79) entitled, "ANI/MAERP Standard Fire Endurance Test Method to Qualify a Protective Envelope for Class IE Electrical Circuits".

2.0 SCOPE

This procedure provides the methods and guidelines to be utilized for the installation of HEMYC Protective Wrap Systems.

3.0 REFERENCE

3.1 10CFR50, Appendix R

3.2 ANI Bulletin No. 5(79)

3.3 HEMYC Test CTP-1026

3.4 QCP-10001, Packaging, Shipping, Receiving, Handling and Storage for HEMYC Protective Wrap Components

3.5 QCP-10002, Fabrication Inspection for HEMYC Protective Wrap Components

3.6 QCP-10003, Installation Inspection Criteria for HEMYC Protective Wrap Components

3.7 HEMYC Protective Cable Wrap System Typicals; PROMATEC Drawings B-310, B-311, B-312 and B-313

4.0 DEFINITIONS

4.1 **BASE** - slotted and drilled, formed plate used in assembly of locking clamp.

4.2 **BRACKET** - galvanized "C" used in conjunction with a base and U-Bolt to make a locking clamp.

4.3 **FENDER WASHER** - a flat washer approximately 1-1/2" O.D. with a small inside hole to slip over rail studs. The function is to prevent or minimize damage to wrap by the locknut and to provide more wrap support.

4.4 **FRAMEWORK** - an assembly consisting of four struts and four clamps (friction or

ISSUE DESIGNATION IN THIS COLL NDICATES CURRENT CHANGE

locking) that surrounds the cable tray, normally spaced on eighteen (18") inch centers.

4.5 **FRICTION CLAMP** - pre-galvanized device used to connect framework to cable tray.

4.6 **LOCKING CLAMP** - galvanized assembly similar to friction clamp but is tightly bolted to the cable tray to prevent movement of the framework.

4.7 **LOCKNUT** - a specially designed, vibration resistant nut having a plastic insert on the threaded portion. These are used primarily on the locking clamp and the rail studs.

4.8 **RAIL** - long sections of strut with threaded anchors stud-welded to it. These are attached to the framework parallel to the tray. Rails provide anchors to secure the Wrap System and add longitudinal support to the framework.

4.9 **SPRING NUTS** - a specially designed rhomboid shaped nut with a spring permanently attached that is used to secure clamps to the struts.

4.10 **STRUTS** - lightweight, pre-galvanized channel used to provide structural support to the Wrap System.

4.11 **U-BOLT** - a "U" shaped bolt bent to provide attachment of locking clamp to cable tray.

4.12 **WRAP** - a fireproof product consisting of ceramic fiber material sewn into an envelope of fireproof fabric.

5.0 RESPONSIBILITIES

5.1 The authorized Installer's ENGINEERING DEPARTMENT shall be responsible to define the scope of work as prescribed on the applicable contract documents and provide the appropriate drawings, specifications, requirements, instructions, etc., to the department responsible for installation.

This department shall also be responsible to provide liaison with applicable client personnel and other internal departments to assure smooth flow of communication.

5.2 The authorized Installer's PRODUCTION DEPARTMENT shall be responsible for the identification and scheduling of work to be performed as defined on the documents furnished by Engineering.

G 5.3 The Installer's, as trained and certified by PROMATEC, shall be responsible for performance of installation activities herein prescribed.

G 5.4 The Installer's QUALITY CONTROL PERSONNEL, as trained and certified by PROMATEC, shall be responsible for appropriate inspection, documentation and monitoring.

6.0 PROCEDURE

6.1 Locking Clamp Assembly (See Figure 1).

G 6.1.1 Attach U-Bolt to base by sliding U-Bolt through slots in base. U-Bolt and base plate may be turned 180°.

ISSUE DESIGNATION IN THIS COLU INDICATES CURRENT CHANGE

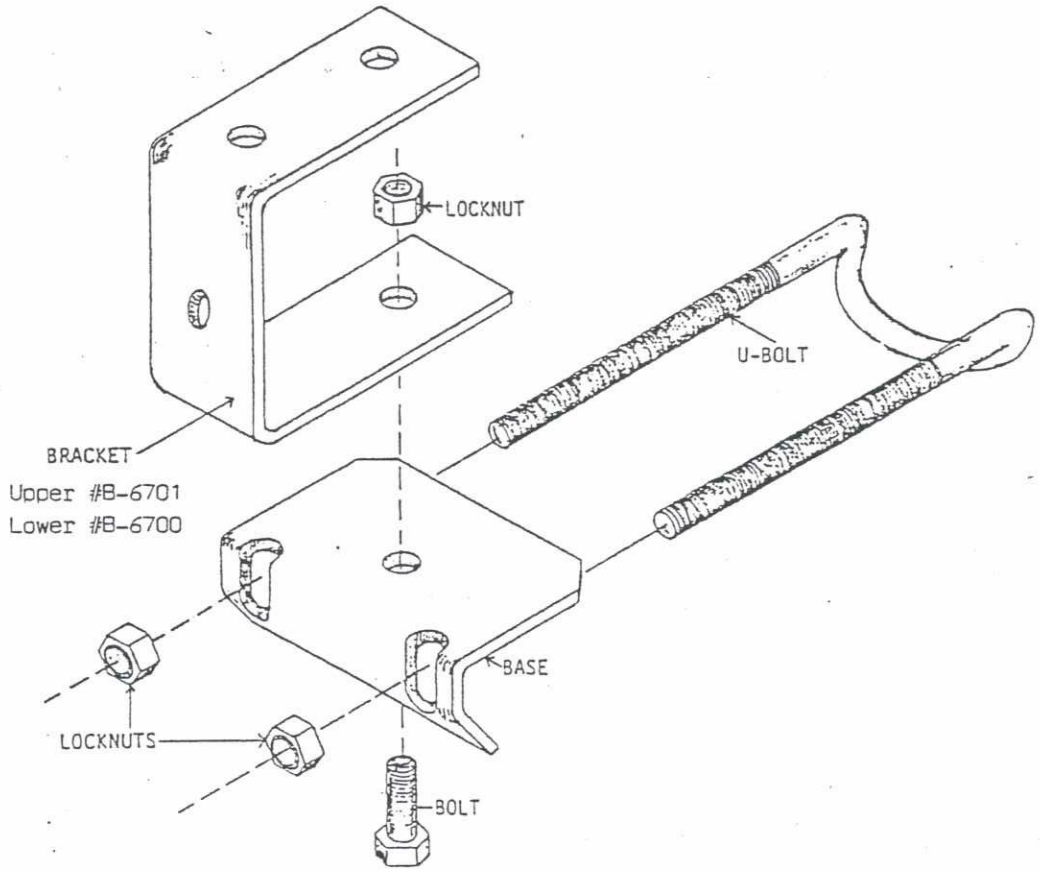

LOCKING CLAMP - ASSEMBLY

FIGURE 1

6.1.2 Secure U-Bolt by threading locknuts onto legs until threads contact nylon insert in locknut. DO NOT TIGHTEN.

G

6.1.3 Insert 1/4" x 3/4" - 20 Thread Bolt through hole in bottom of base and through hole on long leg of bracket. For cable tray 90° or 45° bend sections, two clamp bases may share this bolt.

6.1.4 Thread locknut onto bolt and tighten. Ensure that a minimum of one (1) full thread is visible above the locknut. Keep bracket as square as possible in relation to base.

6.1.5 For alternate cable tray types, the Installer's Site Engineer shall determine the type of clamping devices to be utilized. (Alternate clamping devices shall, as a minimum, provide adequate support similar to those devices utilized in the fire test.)

6.2 Framework Assembly and Installation

6.2.1 Insert Spring nuts near ends of strut sections.

ISSUE DESIGNATION IN THIS COLL .DICATES CURRENT CHANGE

G

6.2.2 Attach clamps to each end of horizontal struts using bolt and lockwasher threaded into spring nut. (Written instruction for installation of alternate clamping devices shall be delineated on site specific addendums to this and/or other procedures.)

When necessary for additional support, horizontal strut may be attached to an adjacent support using the #B-6141 flat bracket. In order to match existing interferences, horizontal and side struts may be installed at acute or obtuse angles.

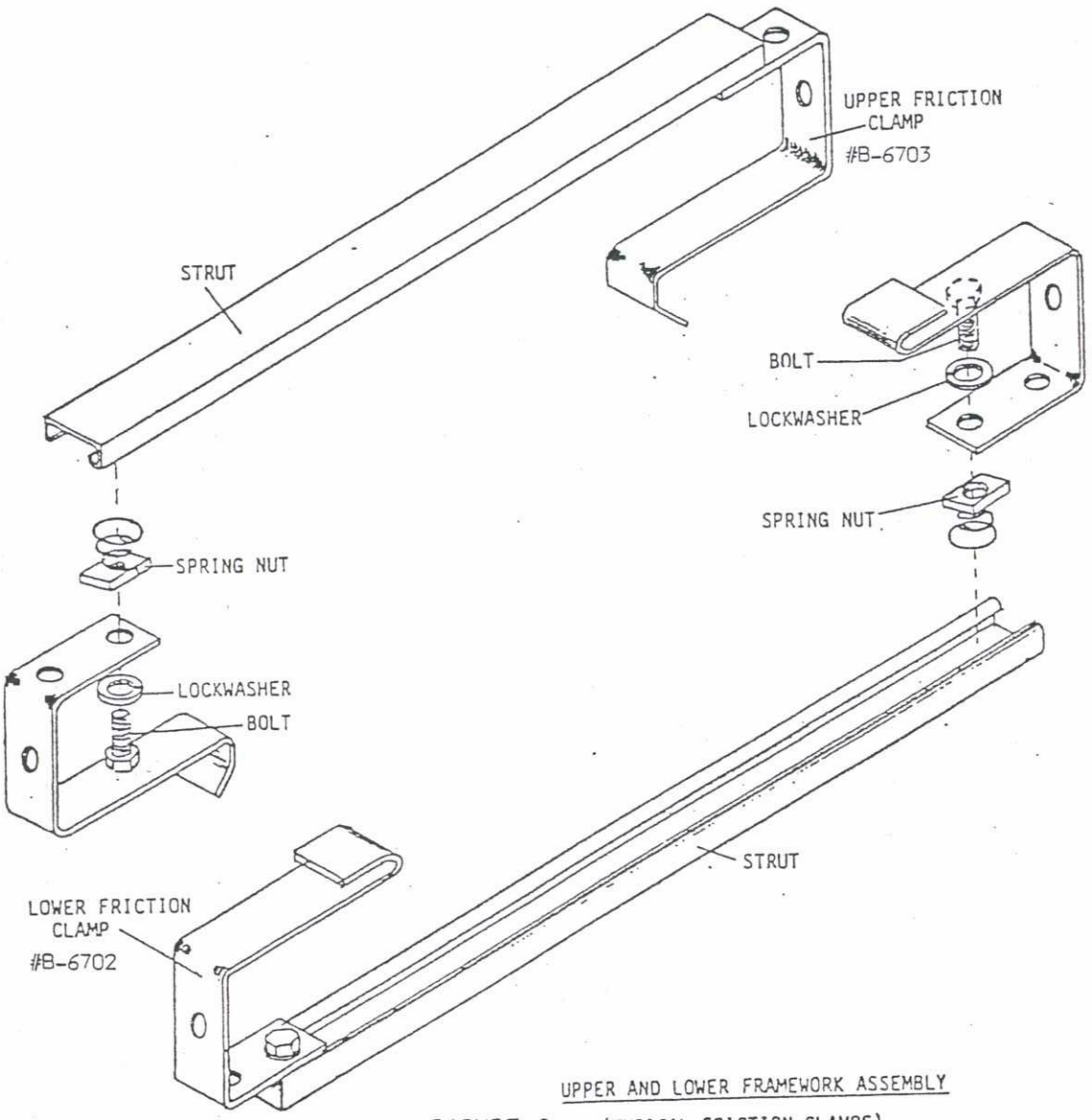

UPPER AND LOWER FRAMEWORK ASSEMBLY

FIGURE 2 (TYPICAL-FRICTION CLAMPS)

ISSUE DESIGNATION IN THIS COLUMN INDICATES CURRENT CHANGE

6.2.3 Install clamp and strut assembly onto cable tray on approximate eighteen (18") inch centers. At least every seventh assembly should be locking clamps. Additional locking clamps may be installed if required by Installer's Site Engineer. Clamps may be mixed as determined by the Installer's Site Engineer (See Figure 3A and Figure 3B). Do not damage cable during installation.

G #B-6700 and #B-6701 brackets may be bent as necessary to install framework. Two (2") inch minimum air space to be maintained in all directions between the outside of the tray and the outside of the struts, unless approved by FCR.

FRICTION CLAMP ASSEMBLY-TYPICAL

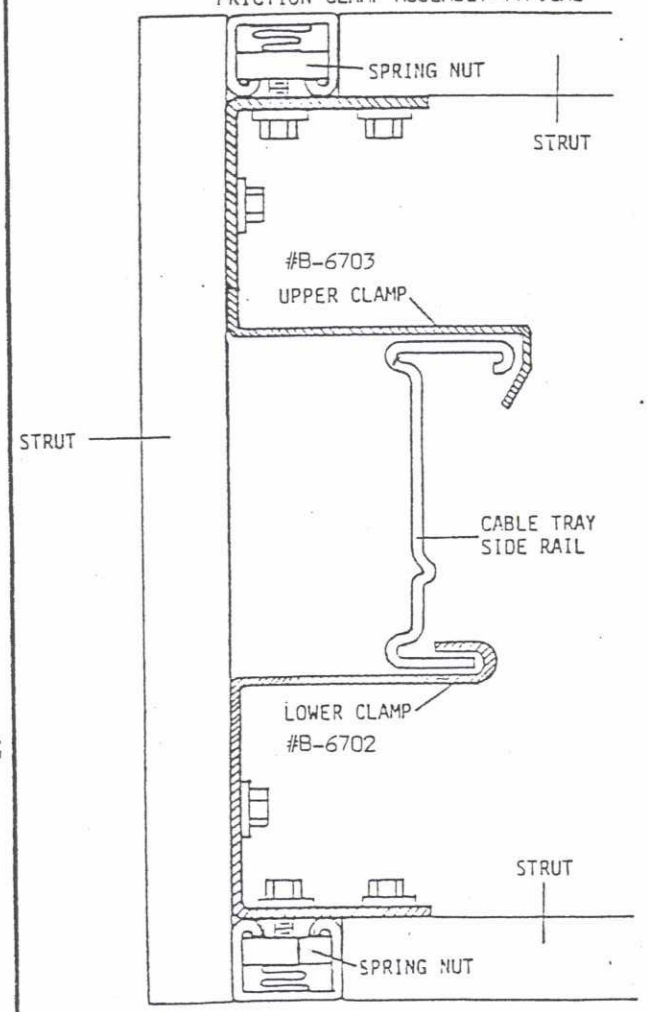

FIGURE 3A

LOCKING CLAMP ASSEMBLY-TYPICAL

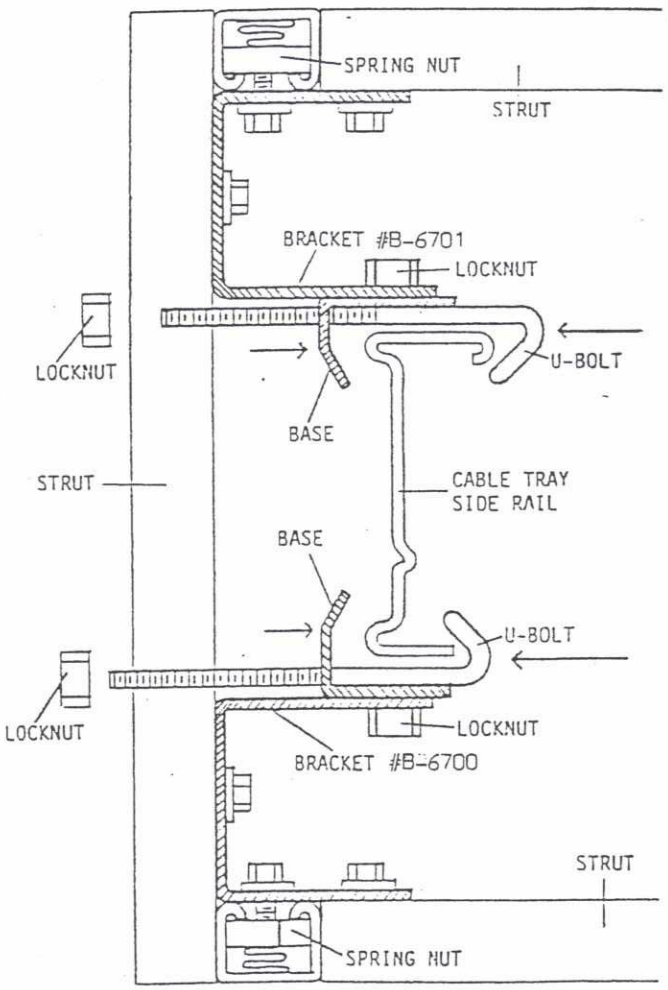

FIGURE 3B

G 6.2.4 Attach side struts to horizontal assemblies using bolt and lockwasher threaded into spring nut. Strut may need to be moved up or down to facilitate bolt insertion. (See Figure 4.) In order to match existing interferences, horizontal and side struts may be installed at acute or obtuse angles.

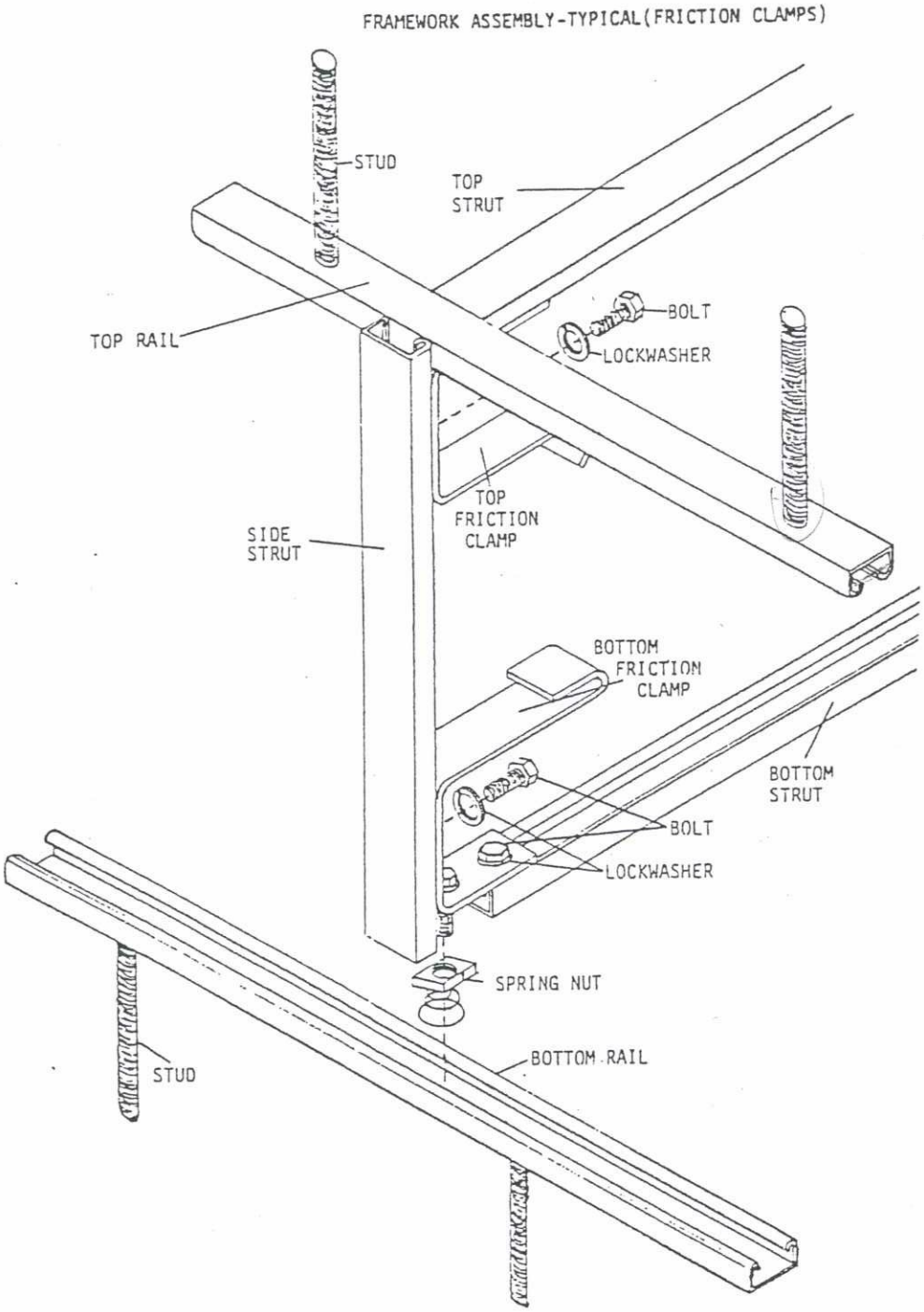

FIGURE 4

ISSUE DESIGNATION IN THIS COLU DICATES CURRENT CHANGE

ISSUE DESIGNATION IN THIS COLUI DICATES CURRENT CHANGE

6.2.5 Insert spring nuts into rails on approximate eighteen (18") inch centers.

6.2.6 With the framework sections placed on approximate eighteen (18") inch centers (± 1"), attach rails using bolts and lockwashers.

6.2.7 Check to ensure that side struts are flush (± 1/4") with the rails and firmly tighten bolts to ensure side struts to clamps.

6.2.8 Firmly tighten bolts to ensure rails to clamps.

6.2.9 Remove gaps, if any, between rails and horizontal strut by pulling on opposing side strut or rail and firmly tighten bolt to secure horizontal struts.

6.2.10 Firmly tighten locknuts on positive clamp U-Bolt to secure framework.

6.2.11 Frameworks may be shifted, if necessary, by loosening bolt to rail, moving framework as required, and retightening bolt.

6.3 Wrap Installation

6.3.1 Assemble materials, wraps, washers, nuts, etc., in area of cable tray to be protected.

6.3.2 For ease of installation either the sides or bottom wrap may be placed on the framework first. The top blanket should be the last blanket to be placed on the framework in order to have ease of access to cables.

6.3.3 Attach side wraps to top rails by forcing wraps onto studs (Use of pointed instrument, such as a punch, to start holes in wraps is suggested). Ensure the wrap is secured to studs. Impale wrap (inside filler material) at least two (2") inches past the edge of the stud. (See Figure 5.)

[CONTINUED ON NEXT PAGE]

ISSUE DESIGNATION IN THIS COLU NDICATES CURRENT CHANGE

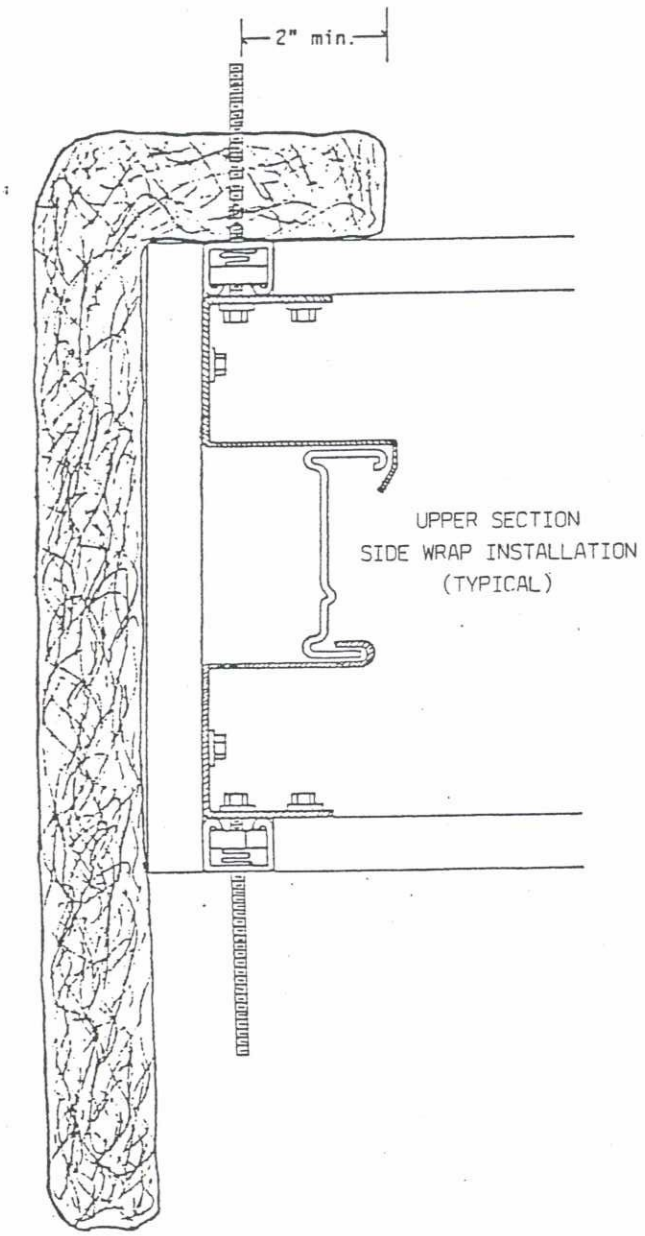

FIGURE 5

ISSUE DESIGNATION IN THIS COLU DICATES CURRENT CHANGE

6.3.4 Install bottom wrap onto bottom rails. This is easier if both sides are done at the same time working from one end. Use fender washers and locknuts to hold the wrap onto the studs temporarily. Do not tighten the locknuts or damage the plastic insert. (See Figure 6.) If locknut is damaged, replace with a new one.

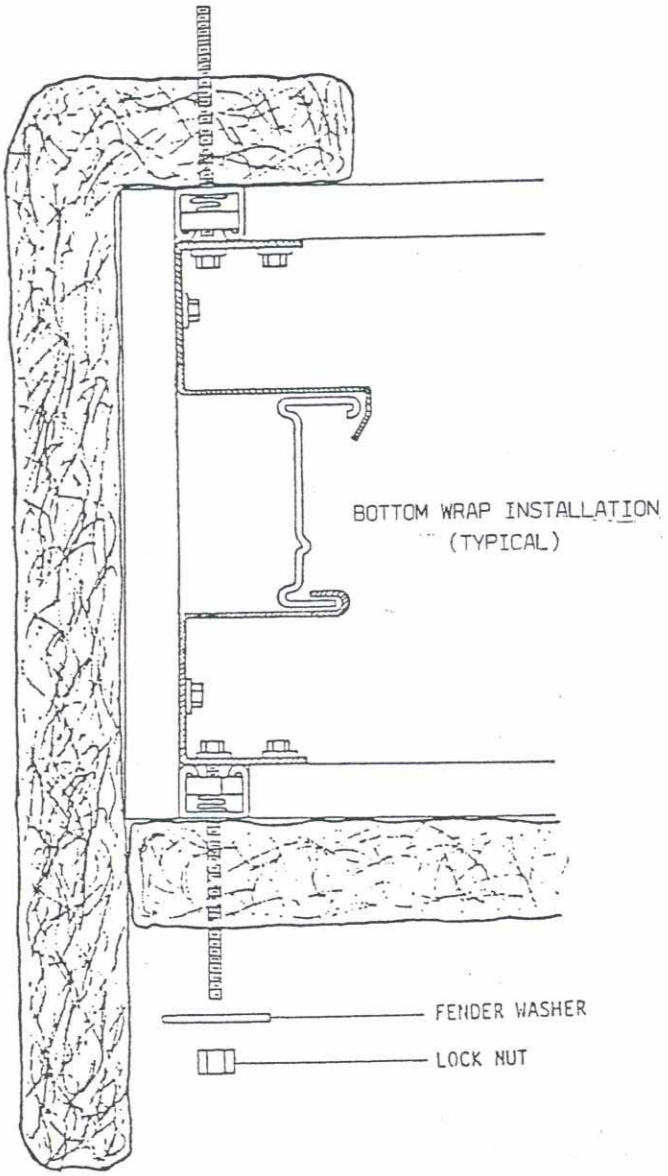

FIGURE 6

6.3.5 Attach lower end of side wraps to bottom rail. This is best accomplished by removing, one at a time, a fender washer and locknut supporting the bottom wrap, forcing the side wrap onto the stud and re-installing the fender washer and locknut. Make sure that the side wrap extends a minimum of two (2") inches past the studs. (See Figure 7.)

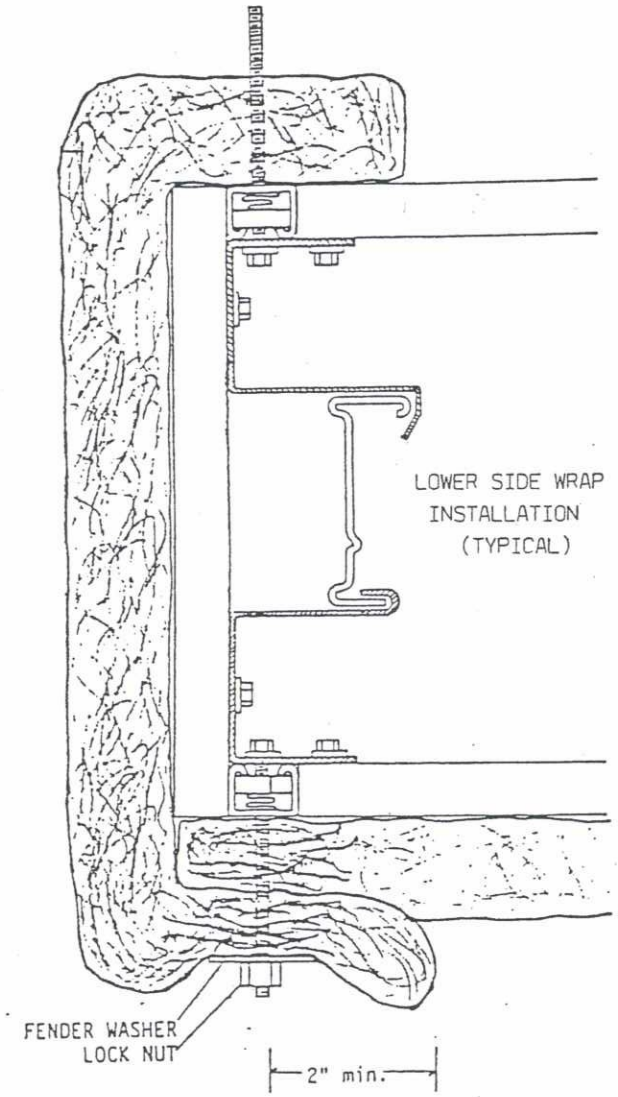

FIGURE 7

ISSUE DESIGNATION IN THIS COLU INDICATES CURRENT CHANGE

6.3.6 Place top wrap on top framework approximately centered. Push wrap onto studs and install fender washer and locknuts. (See Figure 8.)

6.3.7 Tighten locknuts onto studs until the wraps are compressed one-fourth to one-half (1/4" - 1/2") inches.

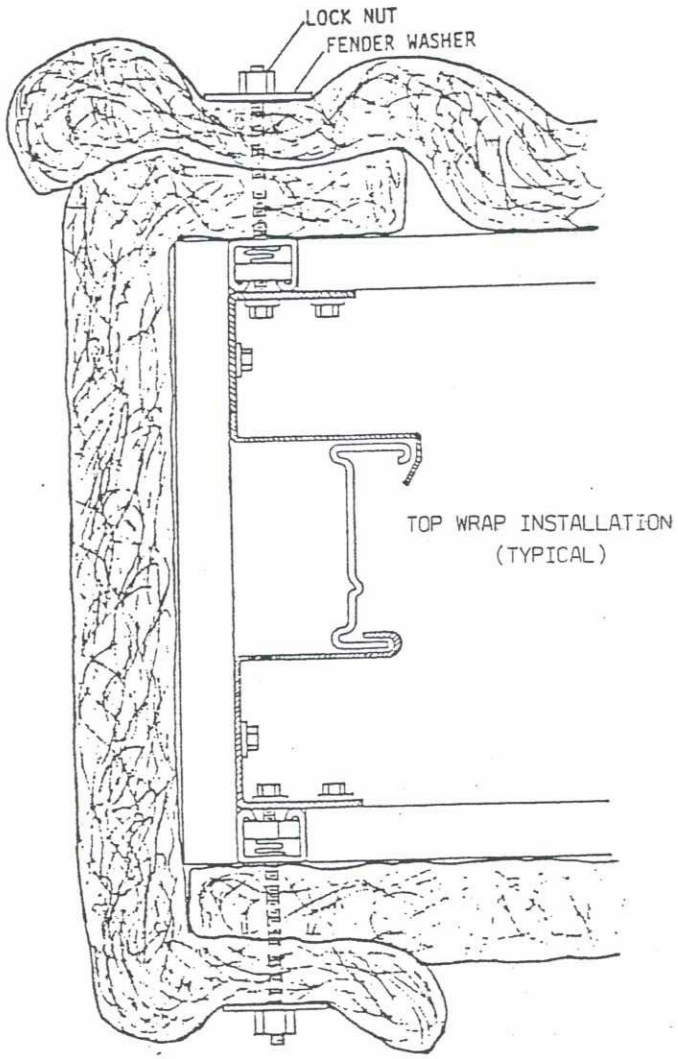

FIGURE 8

ISSUE DESIGNATION IN THIS COLU DICATES CURRENT CHANGE

ISSUE DESIGNATION IN THIS COLU .DICATES CURRENT CHANGE

G 6.3.8 At Wrap System continuation joints, the continuing Wrap System must overlap four to six (4" - 6") inches onto the other system. (See Figure 9.) Additional studs may be required as determined by Installer's Site Engineer. These studs are to be installed by Construction or any required or additional framework rail or strut where Wrap System needs additional support. In some cases, pin rail may need to be installed in place of strut. Engineering approval is not required for additional support.

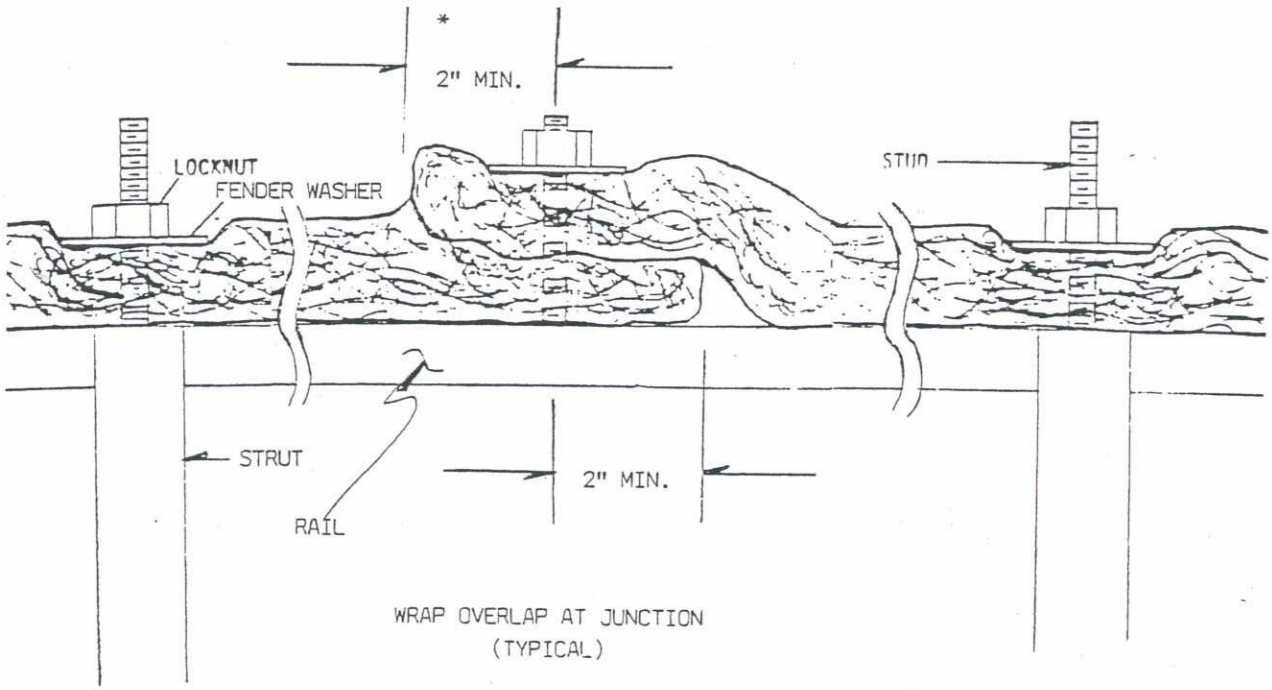

WRAP OVERLAP AT JUNCTION
(TYPICAL)

* SEE PARA 6.3.9 WHEN EXTERIOR BLANKET DOES NOT EXTEND BEYOND THE STUDS THE REQUIRED 2" MINIMUM.

FIGURE 9

6.3.9 In those situations where the exterior blanket at any joint does not extend beyond the studs the recommended two (2") inch minimum, an overlap of less than two (2") inches used in conjunction with a continual quartz thread stitching along the joint is an acceptable alternate.

6.3.10 Stagger Wrap System continuation joints so that only opposite sides stop at any one stud (two side wraps or top and bottom wrap). No more than three thicknesses of wrap should be on any one stud.

ISSUE DESIGNATION IN THIS CO. N INDICATES CURRENT CHANGE

FABRICATION PROCEDURE FOR THREE HOUR FIRE M.T. BARRIER COMPONENTS

1.0 PURPOSE

The purpose of this procedure is to assure that the fabrication of the Three Hour Fire M.T. Barrier Components are consistent with the system components as tested in PROMATEC Three Hour Fire qualification tests.

2.0 SCOPE

The PROMATEC Three Hour M.T. Barrrier System is comprised of Three compponent assemblies: 1) Inner Blanket Assembly, 2) Moisture Barrier, 3) Outer Blanket Assembly. This procedure shall address the Inner Assembly and Outer Assembly only and shall provide the methods and guidelines utilized in the fabrication of these assemblies.

3.0 REFERENCES

3.1 Fabrication Order (Form QC-59). See Attachment 7.1.

3.2 QCP-0042 -- Fabrication Inspection for PROMATEC protective wrap envelopes (Blankets).

3.3 QCP-0041 -- Packaging, shipping, receiving, handling and storage of PROMATEC protective wrap components

4.0 DEFINITIONS

4.1 Hot Side -- The outermost surface of a blanket assembly. See Attachment 7.2, Figure 3.

4.2 Cold Side -- The innermost surface of a blanket assembly. See Attachment 7.9, Figure 7.

5.0 RESPONSIBILITY

5.1 The Construction Manager or designee shall be responsible for the preparation and processing Fabrication Orders (QC-59) in accordance with PROMATEC field engineering and/or client requirements.

5.2 The Technical Services Manager or designee shall be responsible for providing assistance and direction for unique design configurations.

5.3 The authorized fabricator shall follow Fabrication Order form (QC-59), fabrication procedure, and Quality Control Procedure. The Quality Assurance Manager or designee shall be responsible for the development and implementation of appropriate procedures for shop field and source inspection of fabricated components to verify conformance with design requirements.

ISSUE DESIGNATION IN THIS CO N INDICATES CURRENT CHANGE

6.0 PROCEDURE

6.1 This procedure applies to the fabrication of the Three Hour M.T. Barrier Components by PROMATEC at the shop and field level, by PROMATEC qualified fabrication sources, and by client or their contractors (when written agreements allow).

6.2 Fabrication performed by any organization other than PROMATEC shall require qualification of such organizations and approval of programs established for controlling fabrication.

6.3 PROMATEC Quality Assurance shall have right of access for source inspection and/or audit to verify compliance with design and quality requirements.

6.4 Prior to the fabrication of any blankets the applicable portions of Fabrication Order Forms (QC-59) shall be completed as outlined in Fabrication Inspection (QCP-0042) guideline. Only acceptable materials listed on Attachment 7.2 will be utilized for fabrication.

6.5 Fabrication of Inner Blanket Assembly

6.5.1 Cut alumina/silica fiber blanket to proper dimensions per Fabrication Order Form (QC-59), to assure finished edge. Cut alumina/silica fiber back six inches as shown on fabrication order to allow for ship lap. See figure 1, Attachment 7.3.

6.5.2 Cut two pieces of fiberglass cloth to proper dimensions for alumina/silica blanket. Allow enough fiberglass cloth to assure all ends have a min. 3/8" tuck. See figure 2, Attachment 7.4.

6.5.3 Place fiberglass cloth and alumina/silica fiber blanket in appropriate position, allow for 3/8" min. tuck on ends and hog ring all edges of fiberglass cloth on hot side of envelope. For spacing of hog rings and clarification of finish edge see figure 3, Attachment 7.5.

6.6 Fabrication of Outer Blanket Assembly

6.6.1 The outer blanket assembly consists of two subassemblies, enveloped in silica dioxide fabric cloth. These subassemblies consist of, alumina/silica fiber blanket and powder (Honey Comb and/or straight tube) envelope.

6.6.2 Fabrication of the powder envelope (Honey Comb).

6.6.2.1 Cut three pieces of coated fiberglass cloth to dimensions assuring proper finished edges as per fabrication order form.

ISSUE DESIGNATION IN THIS CO. • INDICATES CURRENT CHANGE

6.6.2.2 Lay all three pieces of coated fiberglass cloth together and sew a single stitch the length of the fabric 1/2"(±1/4") from the edge on one side only.

6.6.2.3 Sew top and center layers of cloth 3/8"(±1/8") form first sewn edge. Sew with a single stitch the length of the fabric.

6.6.2.4 Fold bottom end of fabric (across grain of tubes) 1/2"(±1/4") and sew across the length of fold with a single stitch.

6.6.2.5 Alternate sewing with a single stitch the length of the fabric from the top and center layers and the bottom and center layers every 7/8"(±1/8"). See figure 4, Attachment 7.6.

6.6.2.6 Fold bottom end of fabric (across grain of tubes) 1/2"(±1/4") and sew across the length of fold with a single stitch.

6.6.2.7 Fill each tube with powder to the size required for each assembly. As per Fabrication form (QC-59).

6.6.2.8 Fold top end of fabric (across grain of tubes) 1/2"(±1/4") and sew across fabric with a single stitch to seal tubes. See figure 5, Attachment 7.7.

6.6.3 Alternate-Fabrication of the powder envelope (straight tubes).

6.6.3.1 Cut two pieces of coated fiberglass cloth to dimension assuring proper finished edges as per fabrication order form.

6.6.3.2 Lay the two pieces of coated fiberglass cloth together and sew a single stitch the length of the fabric 1/2"(±1/4") from the edge on one side only.

6.6.3.3 Continue to sew the length of the fabric every 1 5/8"(±1/8") from the first sewn edge with a single stitch. See figure 6, Attachment 7.8.

6.6.3.4 Fold bottom end of fabric (across grain of tubes) 1/2"(±1/4") and sew across the length of fold with a single stitch.

ISSUE DESIGNATION IN THIS COL. INDICATES CURRENT CHANGE

6.6.3.5 Fill each tube with powder to the size required for each assembly. As per Fabrication form (QC-59)

6.6.3.6 Fold top of fabric (across fabric of tubes) 1/2" ($\pm$1/4") and sew across fabric with a single stitch to seal tubes. Reference of finished assembly, see figure 5, Attachment 7.7.

6.7 Cut Alumina/Silica Fiber Blanket to proper dimensions per Fabrication Order Form (QC-59) to assure finished edge.

6.7.1 Cut two pieces of silica dioxide cloth to proper dimensions to make one envelope for alumina/silica fiber blanket and powder assembly.

6.7.2 Place silica dioxide cloth, alumina/silica fiber blanket, and powder assembly in proper layer. Adjust alumina/silica fiber blanket as shown on fabrication order to allow for 6" ship lap design. Hog ring silica dioxide cloth on cold side of outer blanket assembly. See figure 7, Attachment 7.9.

6.7.3 Alternate method for hog rings on outer blanket assembly, is the use of (Type Q-24) teflon coated thread.

6.7.4 Lacing hooks shall be placed 7-1/2"($\pm$1/4") from finished edges. They shall be place on all top ship lap edges 1-1/2" ($\pm$1/4") from the edge. Lacing hooks to be spaced on maximum of 6" centers. See figure 8, Attachment 7.10.

6.8 Identification Markings of Inner and Outer Blankets

6.8.1 Identification markings shall be placed on every blanket assembly, both inner and outer at a minimum of two locations as follows:

a) In close proximity to one of the lengthwise edges on the hot side surface.

b) In close proximity to one of the end edges on the hot side surface.

c) Various project requirements may specify that these markings are also provided on the cold side surface.

6.8.2 These markings shall be the blanket number as shown on Fabrication Order Form (QC-59).

6.8.3 These markings shall be of a site approved waterproof paint and/or ink which will retain the marking, withstand weather deterioration, other handling effects and shall not be deleterious to the fabrics.

6.8.4 These markings shall be in character no less than 3/4" high.

6.8.5 Other Client approved methods of identification, i.e., tags, etc. may be used in lieu of blanket marking as described if required by project specification.

6.9 Multiple Pieces of Ceramic Fiber Blanket

6.9.1 Whenever multiple pieces of alumina/silica fiber blanket are utilized within one envelope the use of ship lap design is to be used, and darting with Quartz (Type Q-24) thread is to be used to avoid separation of the pieces of alumina/silica fiber blanket. See figure 9, Attachment 7.11.

7.0 ATTACHMENTS

7.1 Fabrication Order Form (QC-59)

7.2 Acceptable Material (Proprietary Information)

7.3 Figure 1

7.4 Figure 2

7.5 Figure 3

7.6 Figure 4

7.7 Figure 5

7.8 Figure 6

7.9 Figure 7

7.10 Figure 8

7.11 Figure 9

ISSUE DESIGNATION IN THIS CO ↓ INDICATES CURRENT CHANGE

PROMATEC

FABRICATION ORDER

PFO-

PROJECT NAME	CUSTOMER	CUSTOMER ORDER NO.	JOB NO.

TYPE _____ QUANTITY _____

LENGTH _____ WIDTH _____ THICKNESS _____ TOTAL FT^2 _____

SCHEMATIC DRAWING REF. _____ SCHEMATIC NO. _____

I.D. NO. _____

ORDERED BY _____ DATE _____

SKETCH

CERTIFICATE OF CONFORMANCE

We hereby certify that all items furnished were fabricated with materials provided by PROMATEC and conform to the requirements of Purchase Order No. _____.

Signature _____ Company _____ Date _____

PROMATEC QUALITY ASSURANCE ACCEPTANCE

Signature _____ Title _____ Date _____

ATTACHMENT 7.2

Only approved materials as listed below shall be utilized in the fabrication of PROMATEC's protective wrap components.

1. Silica Dioxide Cloth

   a. Siltemp S84 and/or 84 SRWR
   b. Santex
   c. Refrasil

2. Fiberglass cloth (Inner Blanket).

   a. Alpha 76281-4634
   b. J.P. Stevens 3582 3910
   c. J.P. Stevens 2025
   d. Havaglass

3. Coated fiberlass cloth

   a. Alpha 76281-4634
   ~~b. J.P. Stevens 3582 3910~~

INNER OUTER not same AS Figure 1

4. Alumina Silica Fiber Blanket - 1" and 1-1/2" nom.

   a. Johns Manville Cerablanket, 8# density 2400° F.
   b. Babcock & Wilcox Kaowool Blanket, 8# density 2300° F. Carborundum Durablanket, 8# density 2300° F.

5. Trihydrate Alumina Grade 30

   a. Alcoa-C30 and/or B. Solem-SB30

6. Hog Rings

   a. Spenaz 16SS-110
   b. Or approved equal

7. Lacing Hooks

   a. Alpha-Maritex 2-1/2" AML-1201-SS
   b. Erico Jones
   c. Or approved equal.

8. Nylon Thread

   a. Tex 90 Spun Kevlar

9. Quartz Thread

   a. Astroquartz - Type Q-24 teflon coated
      and/or
   b. Alphaquartz - Type Q-24 teflon coated

ISSUE DESIGNATION IN THIS CL √ INDICATES CURRENT CHANGE

ISSUE DESIGNATION IN THIS COL. A INDICATES CURRENT CHANGE

INNER BLANKET ASSEMBLY
ALUMINA/SILICA FIBER BLANKET

ONE - ONE HALF - TWO INCH THICK

Not same as 4.0

1" inner } per
1½ outer } IP-001
4.1 & 4.3

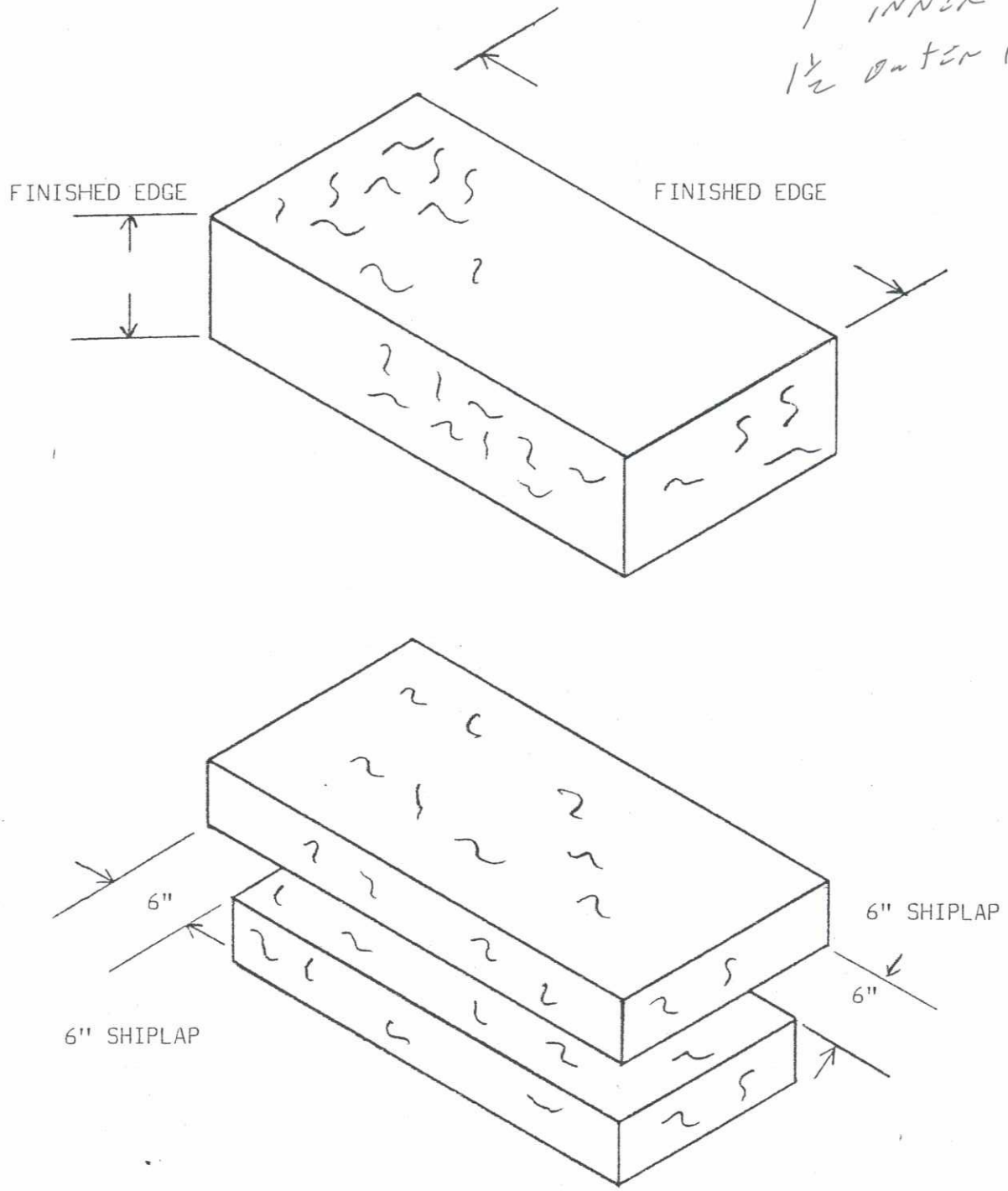

FIGURE 1

ISSUE DESIGNATION IN THIS CO N INDICATES CURRENT CHANGE

INNER BLANKET ASSEMBLY

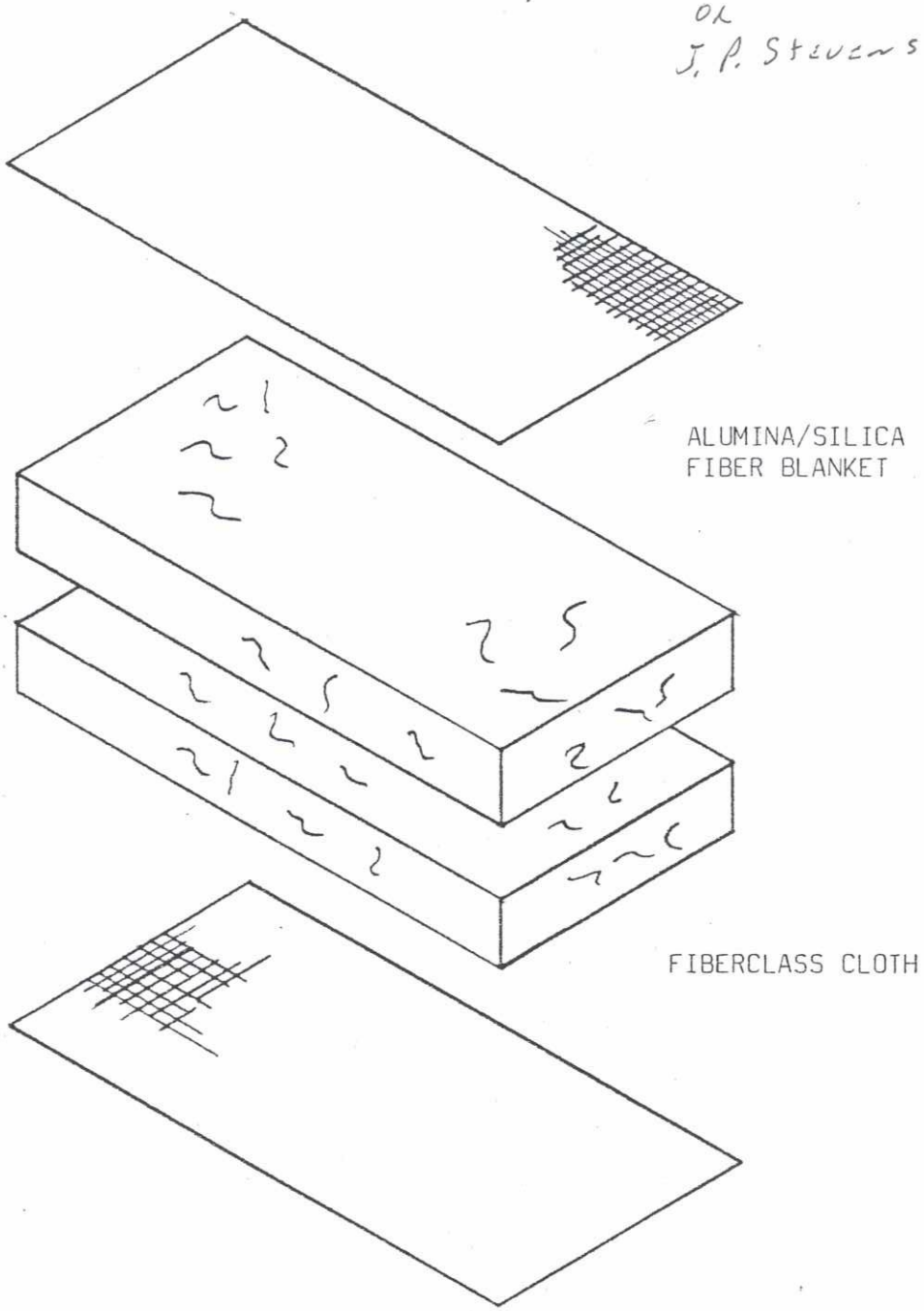

FIGURE 2

ISSUE DESIGNATION IN THIS COLUMN INDICATES CURRENT CHANGE

INNER BLANKET ASSEMBLY

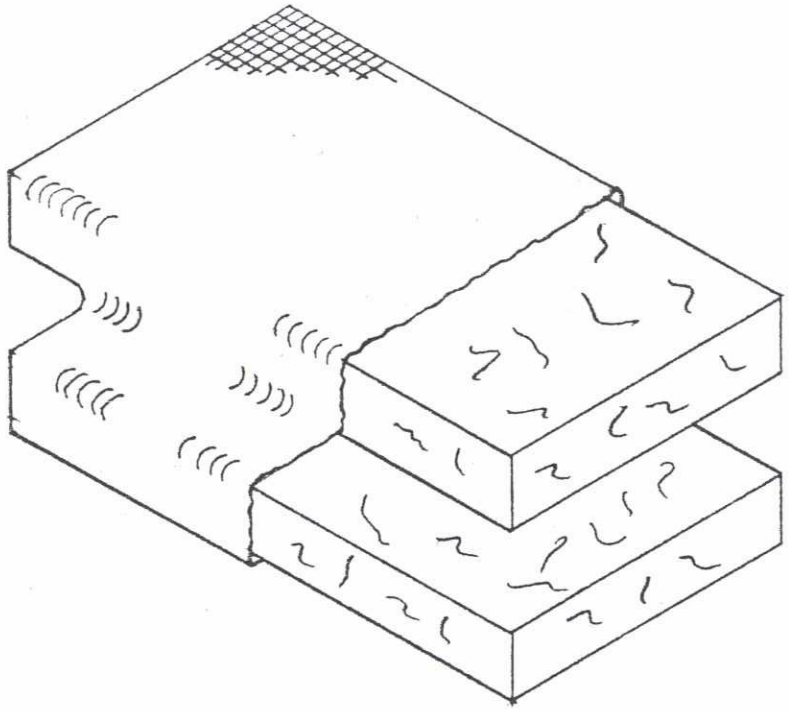

FIGURE 3

ISSUE DESIGNATION IN THIS CL N INDICATES CURRENT CHANGE

HONEY COMB TUBE ASSEMBLY

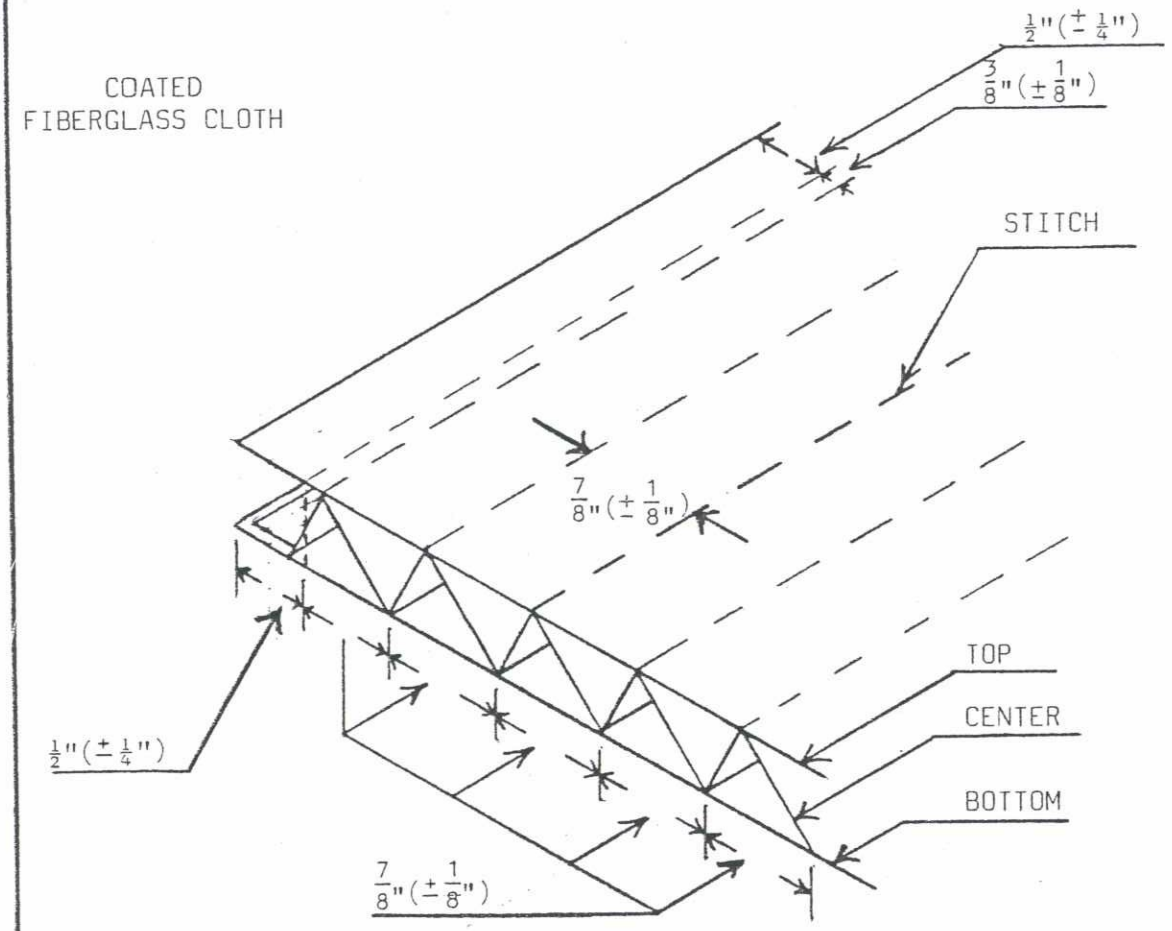

FIGURE 4

ISSUE DESIGNATION IN THIS COLUMN INDICATES CURRENT CHANGE

HONEY COMB AND/OR STRAIGHT TUBE POWDER ASSEMBLY

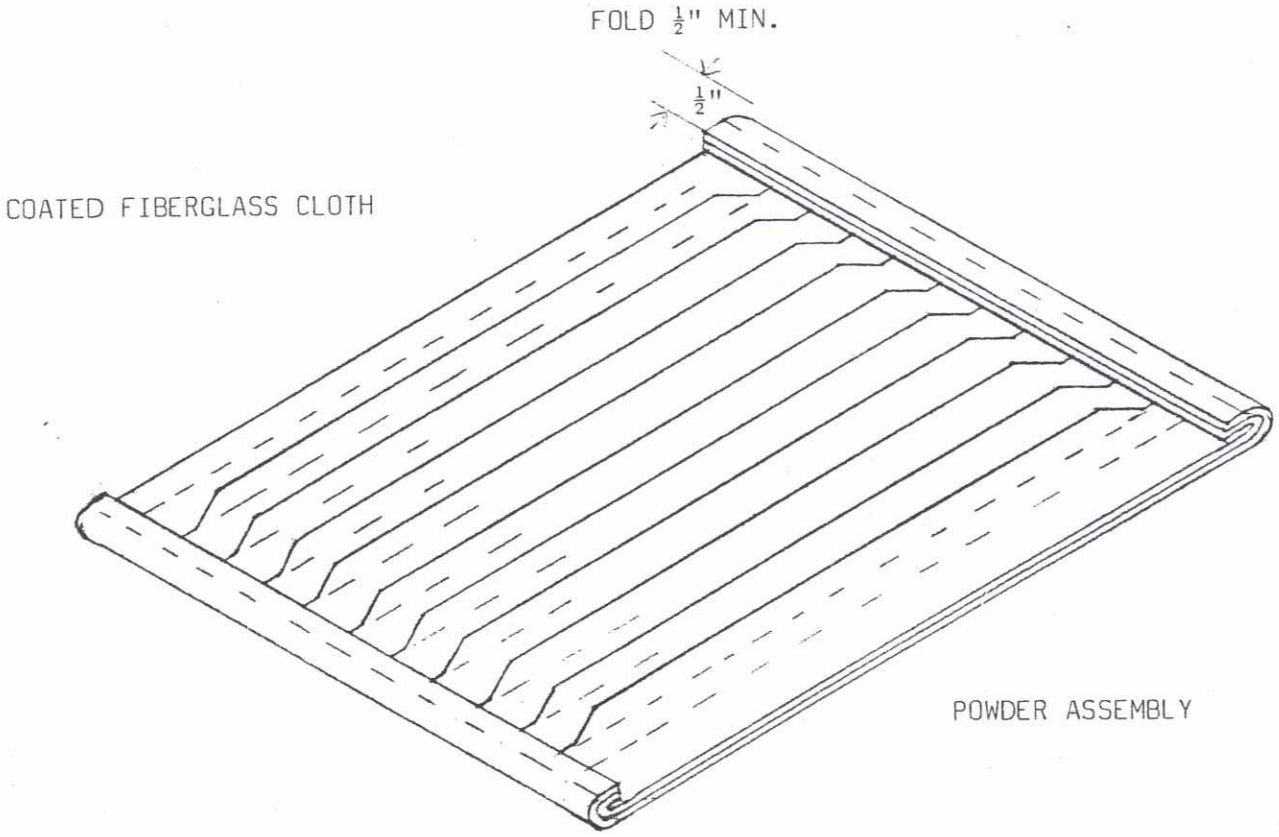

FIGURE 5

ISSUE DESIGNATION IN THIS C N INDICATES CURRENT CHANGE

STRAIGHT TUBE ASSEMBLY

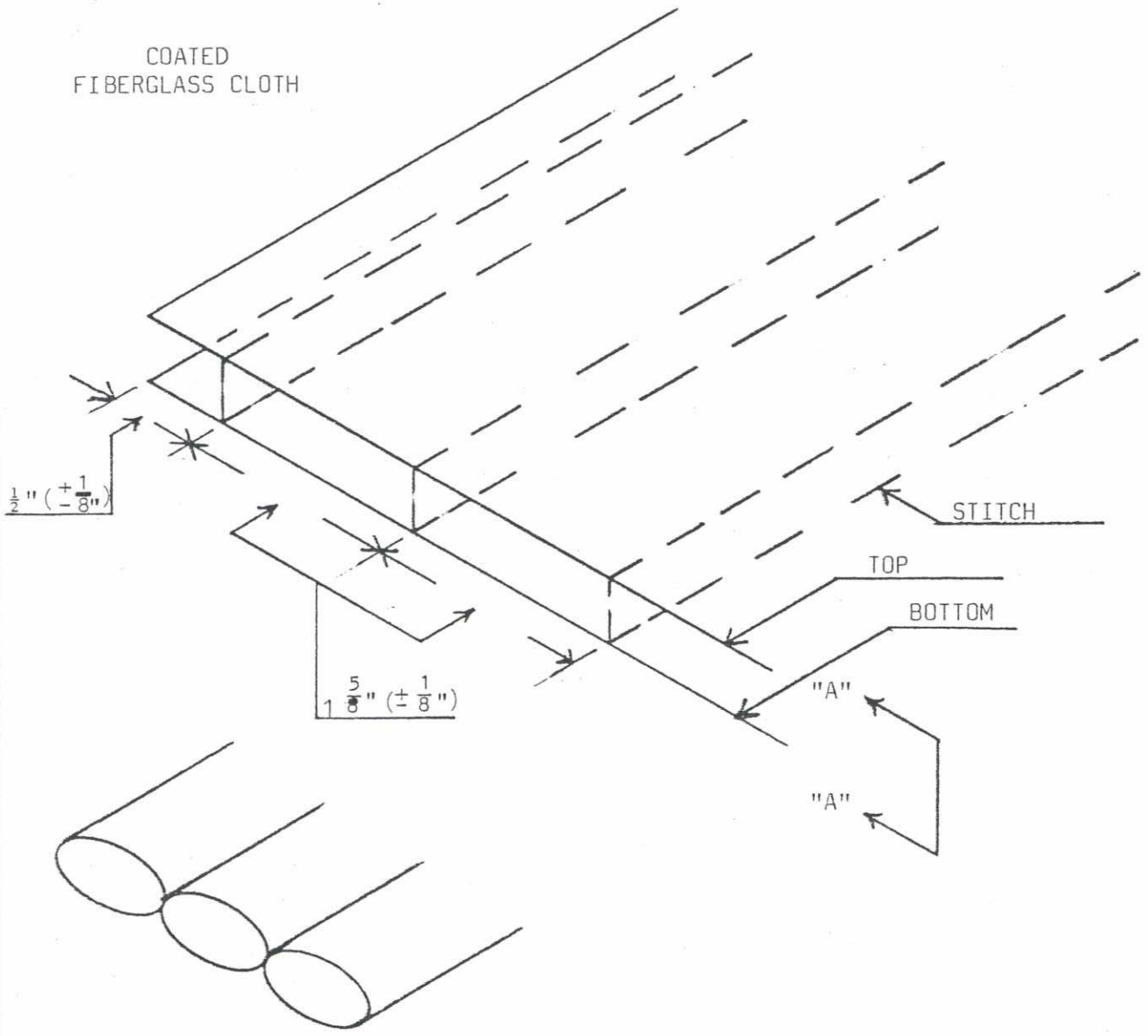

SECTION "A"-"A"

FIGURE 6

OUTER BLANKET ASSEMBLY

SILTEMP CLOTH

ALUMINA/SILICA
FIBER BLANKET

SHIPLAP
6"MIN.

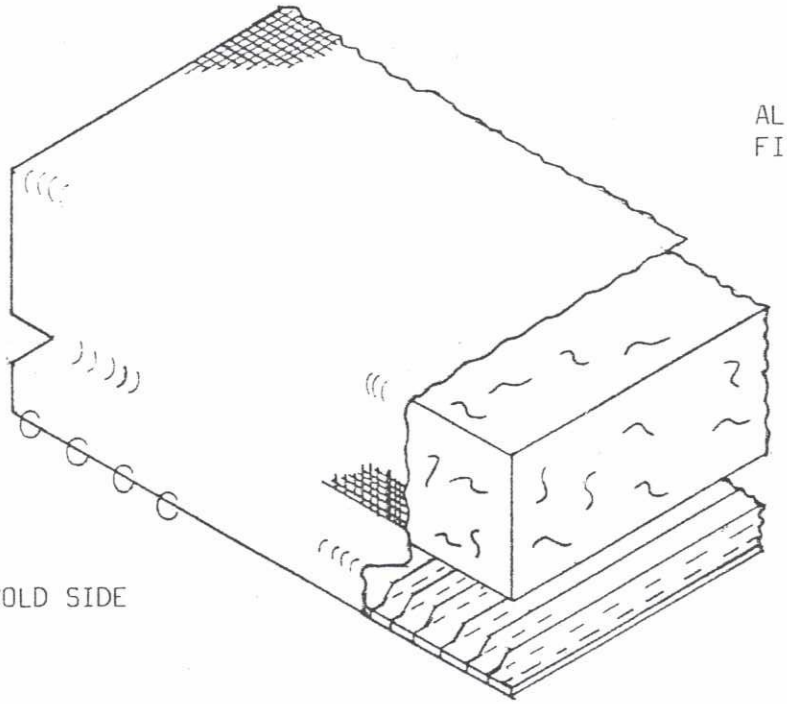

HOG RINGS
SPACING 1"($\pm\frac{1}{4}$")

COLD SIDE

POWDER ASSEMBLY

FIGURE 7

ISSUE DESIGNATION IN THIS C AN INDICATES CURRENT CHANGE

ISSUE DESIGNATION IN THIS C. IN INDICATES CURRENT CHANGE

OUTER BLANKET ASSEMBLY

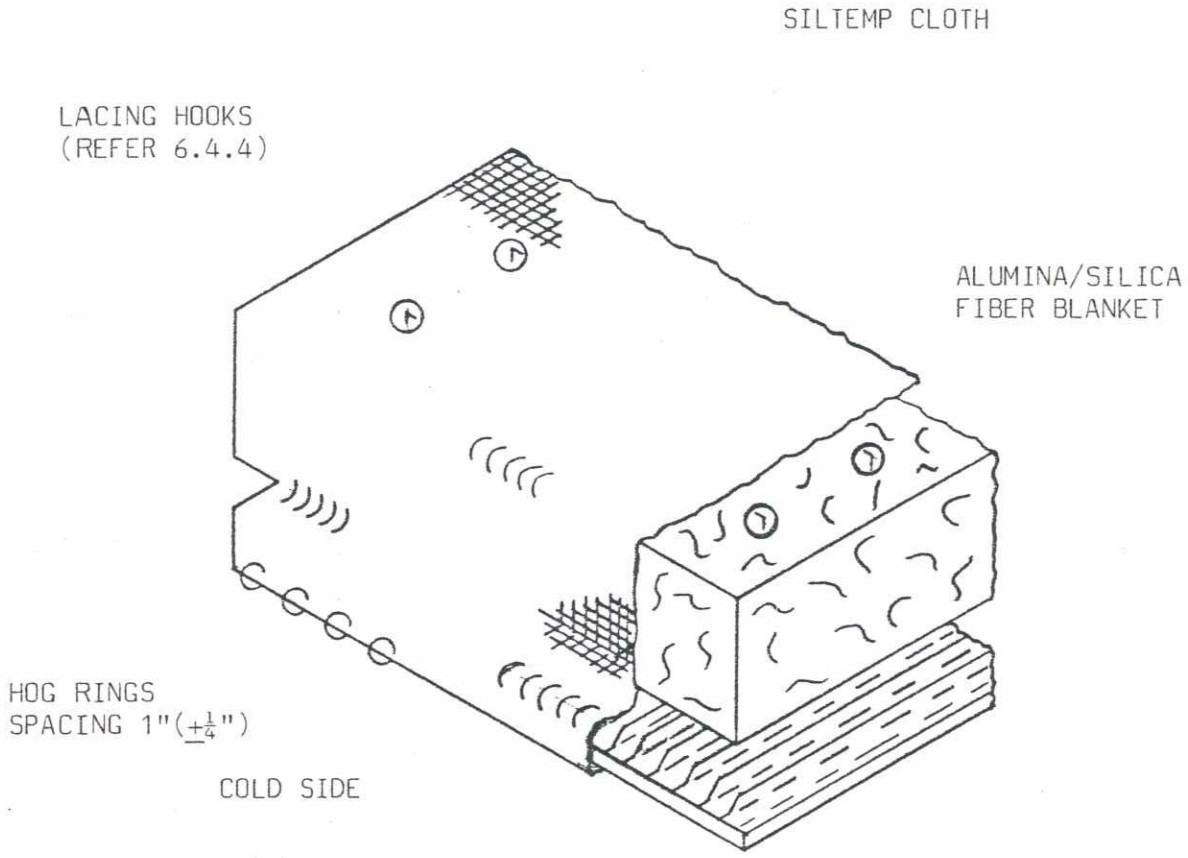

POWDER ASSEMBLY

FIGURE 8

ISSUE DESIGNATION IN THIS C. N INDICATES CURRENT CHANGE

MULTIPLE ALUMINA/SILICA FIBER BLANKET

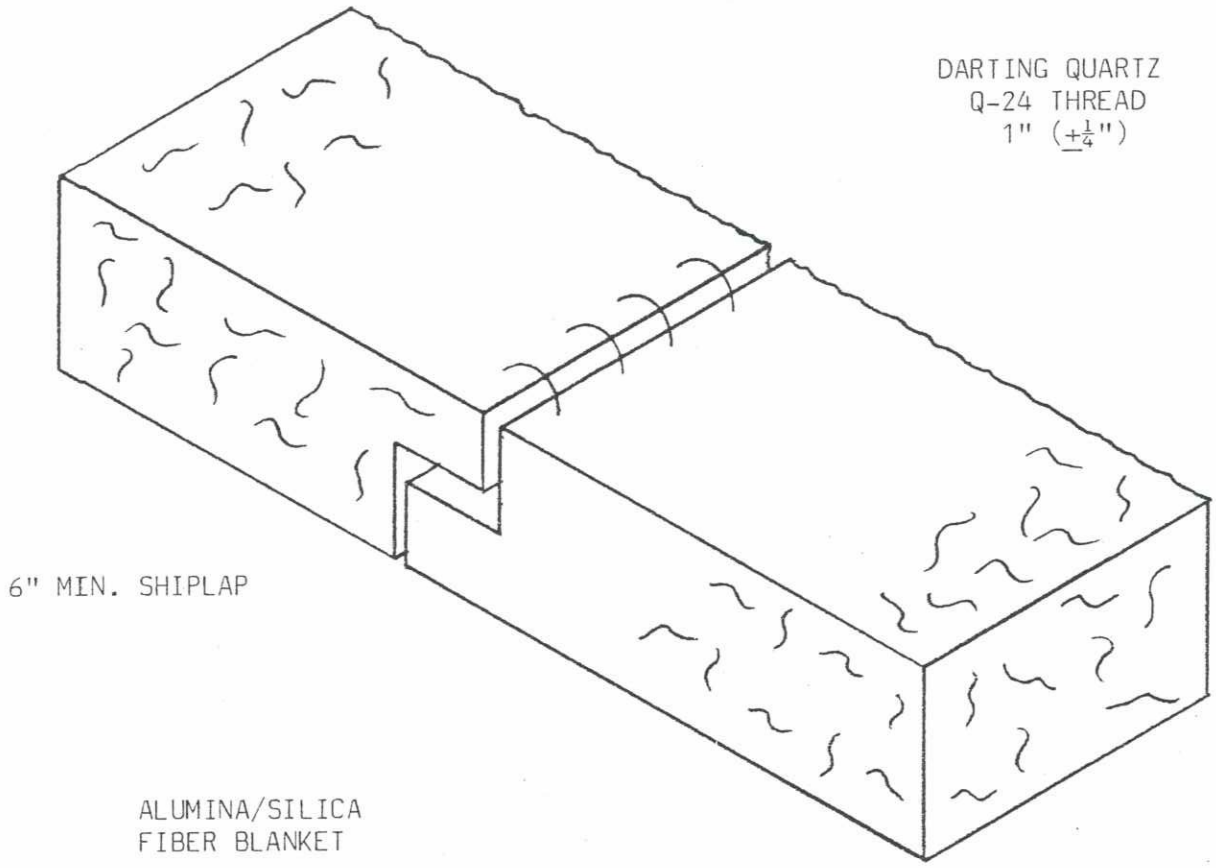

FIGURE 9

ISSUE DESIGNATION IN THIS COLL INDICATES CURRENT CHANGE

INSTALLATION OF
THREE HOUR PROTECTIVE WRAP SYSTEMS
CONDUITS / THREE SIDED WRAP / CABLE DROPS

1.0 PURPOSE

To establish methods and guidelines for the installation of PROMATEC Three Hour Fire Protective Wrap Systems in accordance with established design criteria.

2.0 SCOPE

2.1 To provide methods and sequence steps for installation of inner blanket assemblies, foil barrier and the outer blanket assemblies.

2.2 To establish dimensional requirements for installation.

2.3 To provide requirements and methods for field repairs and modifications.

2.4 Inform craft personnel of the Quality Control inspection notification points to assure work does not proceed until such inspection is performed.

3.0 REFERENCE

3.1 QCP-0041, Installation Inspection of Three Hour Fire Protective Wrap Systems

3.2 Typical Design Details B-495 and B-496

4.0 DEFINITIONS

4.1 **INNER BLANKET** - total one (1") inch thickness of alumina silica blanket enveloped with fiberglass cloth.

4.2 **FOIL BARRIER** - .002 thick stainless steel foil.

4.3 **OUTER BLANKET** - a multi-layered outer blanket assembly consisting of a one and one-half (1-1/2") inch alumina silica blanket and a separate prefabricated fiberglass assembly containing a powdered ingredient with either both enveloped by a fire resistant outer fabric or as two separate components with alumina silica blanket enveloped with a fire resistant fabric.

5.0 RESPONSIBILITIES

5.1 The authorized Installer's ENGINEERING DEPARTMENT shall be responsible to define

ISSUE DESIGNATION IN THIS COLL NDICATES CURRENT CHANGE

the scope of work as prescribed on the applicable contract documents and provide the appropriate drawings, specifications, requirements, instructions, etc., to the department responsible for installation.

This department shall also be responsible to provide liaison with applicable client personnel and other internal departments to assure smooth flow of communication.

5.2 The authorized Installer's PRODUCTION DEPARTMENT shall be responsible for the identification and scheduling of work to be performed as defined on the documents furnished by Engineering.

5.3 The Installer's, as trained and certified by PROMATEC, shall be responsible for performance of installation activities herein prescribed.

5.4 The Installer's QUALITY CONTROL PERSONNEL, as trained and certified by PROMATEC, shall be responsible for appropriate inspection, documentation and monitoring.

6.0 PROCEDURE

6.1 Only approved materials as supplied by PROMATEC, issued under controlled conditions, shall be used in the installation, modification and repair of Three Hour Fire Protective Wrap System components.

6.2 Conduit/Junction Box Installation

6.2.1 Installation of Inner Blanket Assemblies
(Refer to FIRST STEP as shown on Figure 1)

6.2.1.1 Install first inner blanket around the conduit/junction box assuring that the shiplap joint is a tight as possible. Maximum allowable gap is one-half (1/2") inch.

6.2.1.2 Duct tape may be utilized to hold blanket firmly in place (duct tape may be applied completely around blanket to provide tape to tape adhesion).

6.2.1.3 Install subsequent blankets per 6.2.1.1 assuring that lengthwise shiplap joints are as tight as possible. Maximum allowable gap is one-half (1/2") inch.

6.2.1.4 Duct tape per 6.2.1.2.

6.2.1.5 Notify Quality Control for inspection prior to proceeding.

6.2.2 Installation of Stainless Steel Foil Barrier
(Refer to SECOND STEP as shown on Figure 1)

6.2.2.1 Install foil strips lengthwise around the conduit/junction box providing a MINIMUM six (6") inch overlap on ends and edges.

6.2.2.2 In cases where a six (6") inch overlap cannot be achieved due to conduit curvature, foil strips shall be installed with a minimum two (2") inch overlap.

ISSUE DESIGNATION IN THIS COL INDICATES CURRENT CHANGE

6.2.2.3 Duct tape may be utilized to hold foil strips firmly in place. Duct tape and/or aluminum foil tape may be used at the edges of the strips if gap appears excessive due to conduit curvature.

6.2.2.4 Notify Quality Control for inspection prior to proceeding.

6.2.3 Installation of Outer Blanket Assemblies
Refer to THIRD STEP as shown on Figure 2)

6.2.3.1 Install first outer blanket around conduit/junction box assuring that the shiplap joint is as tight as possible. Maximum allowable gap is one-half (1/2") inch.

6.2.3.2 Connect ends by fastening 16 gauge stainless steel tie wire between corresponding lacing hook. Recheck final positioning and tighten securely exercising caution to prevent blanket damage.

NOTE: An additional tie wire may be used after blanket is in final position as necessary to assure a snug fit.

F 6.2.3.3 Install subsequent blankets per 6.2.3.1 and 6.2.3.2 assuring that lengthwise shiplap joints are properly aligned.

F 6.2.3.4 Connect adjoining blankets at circumferential shiplap joints by fastening 16 gauge stainless steel tie wire between each corresponding lacing hook.

NOTE: An additional tie wire may be used after blanket is in final position as necessary to assure a snug fit.

6.2.3.5 Notify Quality Control for final inspection.

6.3 Three Sided Wrap Installation
(Refer to Typical Design Drawings B-495 and B-496)

A three sided or similar installation is required in the event that the conduit or a junction box is installed in close proximity to a wall or floor preventing installation of a wrap surrounding the conduits.

This type of installation requires attachment to concrete surface utilizing site approved anchoring devices as outlined herein. If anchors are installed by others, notify Quality Control for inspection per 6.3.3 prior to proceeding with blanket installation.

6.3.1 Install site approved concrete anchors (minimum 1/4" diameter recommended) on maximum twelve (12") inch centers. Distance from sides of conduit or junction boxes to be determined by Engineering.

Factors to consider are: 1) blanket size, 2) surface characteristics of concrete, 3) number and type of interferences.

6.3.2 Anchors should be pre-set before blankets are impaled onto studs.

ISSUE DESIGNATION IN THIS COLI .NDICATES CURRENT CHANGE

6.3.3 Notify Quality Control for inspection before proceeding.

6.3.4 Place inner blanket around conduit or junction box and impale on studs going from side to side to assure proper alignment. Maintain a one (1") inch nominal thickness of inner blanket.

6.3.5 Duct tape may be utilized to keep joints flush and to hold blanket(s) in position.

6.3.6 Edge of inner blanket shall extend a minimum of two (2") inches from center of studs.

6.3.7 Notify Quality Control for inspection before proceeding.

6.3.8 Install stainless steel foil barrier over inner blanket providing a MINIMUM six (6") inch overlap on all joints. In cases where six (6") inch overlap cannot be achieved due to sharp curvatures install foil strips with a minimum two (2") inch overlap.

6.3.9 Impale foil over studs allowing for the two (2") inch minimum requirements.

6.3.10 Duct tape may be utilized to hold foil firmly in place. Aluminum foil tape may be utilized if gaps are excessive.

6.3.11 Notify Quality Control for inspection before proceeding.

6.3.12 Install outer blanket over foil barrier and impale over studs. Edge of outer blanket shall extend a minimum of two (2") inches over studs. Maintain a two and one-half (2-1/2") inch nominal thickness of outer blanket.

6.3.13 Install fender washers and/or B72 strut and/or flat bar retainer strap over studs assuring that blanket assemblies are not wrinkled or bunched.

6.3.14 Install appropriate sized locknuts (or double nuts) and securely tighten. Do not over-tighten. Depression of blanket shall not exceed three-fourths (3/4") inch.

6.3.15 Connect adjacent blankets or edges of a prefabricated blanket together with 16 gauge stainless steel tie wire between each corresponding lacing hook.

NOTE: An additional tie wire may be used after blanket is in final position as necessary to assure a snug fit.

6.3.16 Recheck final positioning and tighten securely. Exercise caution to prevent damage to blanket assemblies.

6.3.17 Notify Quality Control for final inspection.

6.4 Field Modifications and Repairs

6.4.1 Should an opening in the Wrap System exist due to installation conditions, fill with appropriate inner blanket, alumina silica blanket/fiber, foil barrier and/or outer blanket materials. Engineering to determine size of such small assemblies required.

If hog rings are to be used to close blanket assembly, rings are to be installed on one (1") inch MAXIMUM centers. Q-24 Quartz Thread may be used in lieu of hog rings for inner and/or outer blanket.

Site craft installers to fabricate under supervision of Engineering. Quality Control to provide inspection of such fabrication and/or installation.

6.4.2 Non-electrical interferences (piping, hangers, supports, etc.) shall be protected with a nominal four (4") inch thickness of alumina silica blanket. The outer layer of alumina silica blanket shall be enveloped with an approved outer fabric. Wrap for a minimum distance of eighteen (18") inches or for full length of interference if less than eighteen (18") inches as shown on Figure 3, page 11 of this procedure. Install a sufficient number of lacing hooks and tie wire to close longitudinal seam and to secure wrap to primary system.

6.4.3 When a protected conduit is in close proximity to an electrical cable tray, the interfering portion of the tray shall be included within the conduit wrap system.

Insert alumina silica blanket/fiber around cables for a minimum distance of eighteen (18") inches from each side of the protected conduit as shown on Figure 4, page 12 of this procedure.

6.4.4 Craft installers shall repair damaged blanket assemblies under supervision of Engineering. Only acceptable materials shall be utilized.

6.4.4.1 Patches of proper fabric type shall be cut to a size sufficient to cover a tear or hole overlapping a minimum of two (2") inches onto undamaged fabric. Patches shall have a finished edge on all sides. Install as shown on Figure 5, page 13 of this procedure.

NOTE: Small tears not exceeding two (2") inches in length can be loop stitched with Q-24 thread at maximum spacing of one-half (1/2") inch. Holes or tears in fiberglass cloth and outer fabric not exceeding one (1") inch shall not require repair.

6.4.4.2 If inner alumina silica blanket material is damaged or has a void, add additional material as necessary.

6.4.4.3 Engineering concurrence shall be obtained for any repair activities. Upon completion, notify Quality Control for inspection.

6.4.5 Additional lacing hooks may be added as needed in conjunction with original installation or modification.

6.5 Cable Drop Installation

6.5.1 Installation of Inner Blanket Assemblies
(Refer to first step as shown in Figure 6)

6.5.1.1 Bundle cables into as nearly a round configuration as feasible. Duct tape or cable tie wraps may be used to maintain this configuration.

ISSUE DESIGNATION IN THIS COL .NDICATES CURRENT CHANGE

ISSUE DESIGNATION IN THIS COLI ..DICATES CURRENT CHANGE

6.5.1.2 Install first inner blanket around cable bundle assuring that shiplap joint is as tight as possible. Maximum allowable gap is one-half (1/2") inch.

6.5.1.3 Duct tape may be utilized to hold blanket firmly in place (duct tape may be applied completely around blanket to provide tape to tape adhesion).

6.5.1.4 Install subsequent blankets (if required) per 6.5.1.2 assuring the lengthwise shiplap joints are as tight as possible.

6.5.1.5 Duct tape per 6.5.1.3.

6.5.1.6 Notify Quality Control for inspection prior to proceeding.

6.5.2 Installation of Stainless Steel Foil Barrier
(Refer to second step as shown in Figure 6)

6.5.2.1 Install foil strips length wise around the cable bundle providing a minimum six (6") inch overlap on ends and edges.

6.5.2.2 Duct tape may be utilized to hold foil strips firmly in place. Duct tape and/or aluminum foil tape may be used at the edges of the strips if gaps appear excessive due to curvature of the cable drop bundle.

6.5.2.3 Notify Quality Control for inspection prior to proceeding.

6.5.3 Installation of Outer Blanket Assemblies
(Refer to third step as shown on Figure 7)

6.5.3.1 Install first outer blanket around conduit assuring that the shiplap joint is as tight as possible. Maximum allowable gap is one-half (1/2") inch.

6.5.3.2 Connect ends by fastening 16 gauge stainless steel tie wire between each corresponding lacing hook. Recheck final positioning and tighten securely exercising caution to prevent blanket damage.

NOTE: An additional tie wire may be used after blanket is in final position as necessary to assure a snug fit.

6.5.3.3 Install subsequent blankets per 6.2.3.1 and 6.2.3.2 assuring that lengthwise shiplap joints are properly aligned.

6.5.3.4 Connect adjoining blankets at circumferential shiplap joints by fastening 16 gauge stainless steel tie wire between each corresponding lacing hook.

NOTE: An additional tie wire may be used after blanket is in final position as necessary to assure a snug fit.

6.5.3.5 Notify Quality Control for final inspection.

6.6 Alternate method for installing outer blanket assemblies.

ISSUE DESIGNATION IN THIS COLL ..DICATES CURRENT CHANGE

6.6.1 Wrap tube assembly around foil barrier assuring that ends abut with no apparent gaps. Install approved tape completely around assembly with tape-to tape adhesion at sufficient spacing to assure no gaps at longitudinal joint.

6.6.2 Install subsequent tube assemblies per 6.6.1 assuring that circumferential joints firmly abut with no apparent gaps and that longitudinal joints are properly aligned. Apply duct tape lengthwise across each circumferential joint to hold in place.

6.6.3 Notify Quality Control for inspection prior to proceeding.

6.6.4 Install alumina silica blanket around tube assembly assuring that ends abut with no apparent gaps. Stagger longitudinal and circumferential joints a minimum six (6") inches from respective tube assembly joints.

6.6.5 Connect longitudinal joints by fastening 16 gauge stainless steel tie wires between each adjacent lacing hook.

NOTE: An additional tie wire may be used after blanket is in final position as necessary to assure a snug fit.

6.6.6 Notify Quality Control for inspection after each blanket is installed.

6.6.7 Install subsequent blankets as noted above. Stagger circumferential joints a minimum six (6") inches from tube assembly joints.

6.6.8 Connect adjoining blankets by fastening 16 gauge stainless steel tie wire between each adjacent lacing hook at circumferential joints assuring tight fit with no apparent gaps.

NOTE: An additional tie wire may be used after blanket is in final position as necessary to assure a snug fit.

6.7 Raceway Identification Tags

6.7.1 Upon completion of Wrap System installation, raceway identification (as furnished by client) shall be affixed on both ends with stainless steel tie wire as follows:

6.7.1.1 If conduit funs five (5') feet or longer, affix tags at all entrance and exit points (walls, floors) and at the origin and destination points (cable tray, junction box, etc.).

6.7.1.2 If conduit run is less than five (5') feet, affix one tag at a central location or at the most visible location of the conduit. Conduits shall be identified at intervals not greater than fifteen (15') feet.

7.0 ATTACHMENTS

None

ISSUE DESIGNATION IN THIS COLL INDICATES CURRENT CHANGE

FIRST STEP

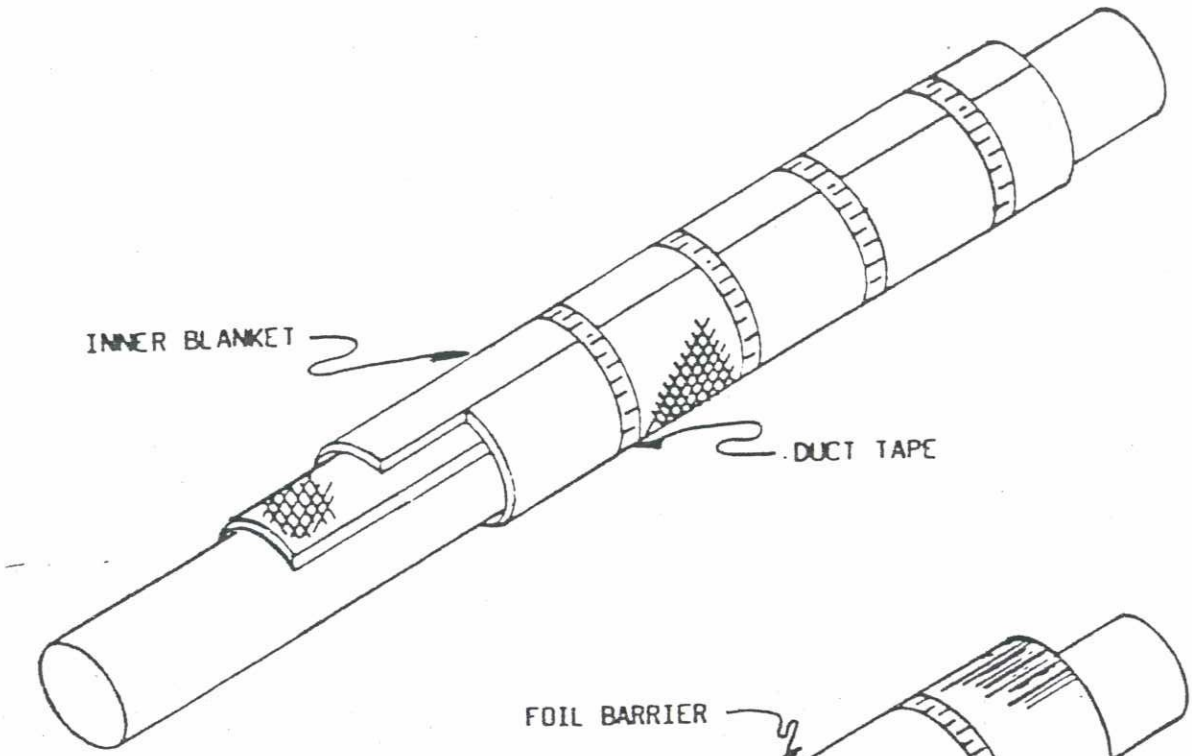

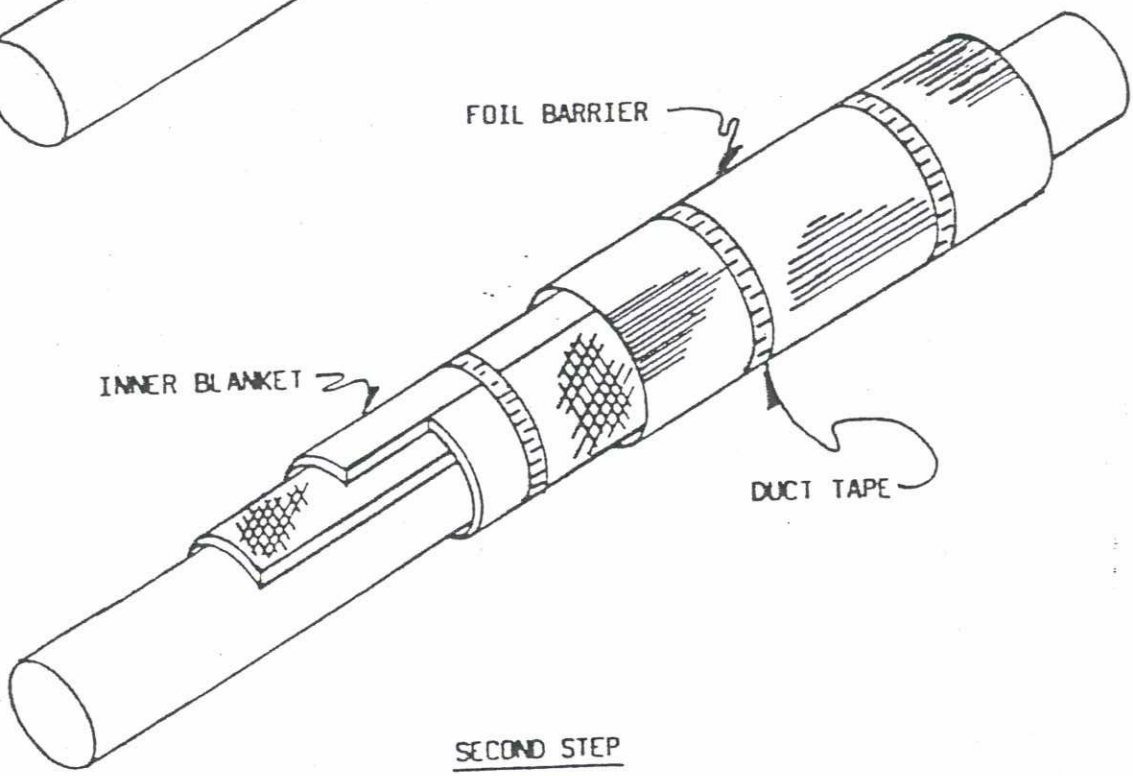

SECOND STEP

FIGURE - 1

ISSUE DESIGNATION IN THIS COL . .NDICATES CURRENT CHANGE

THIRD STEP

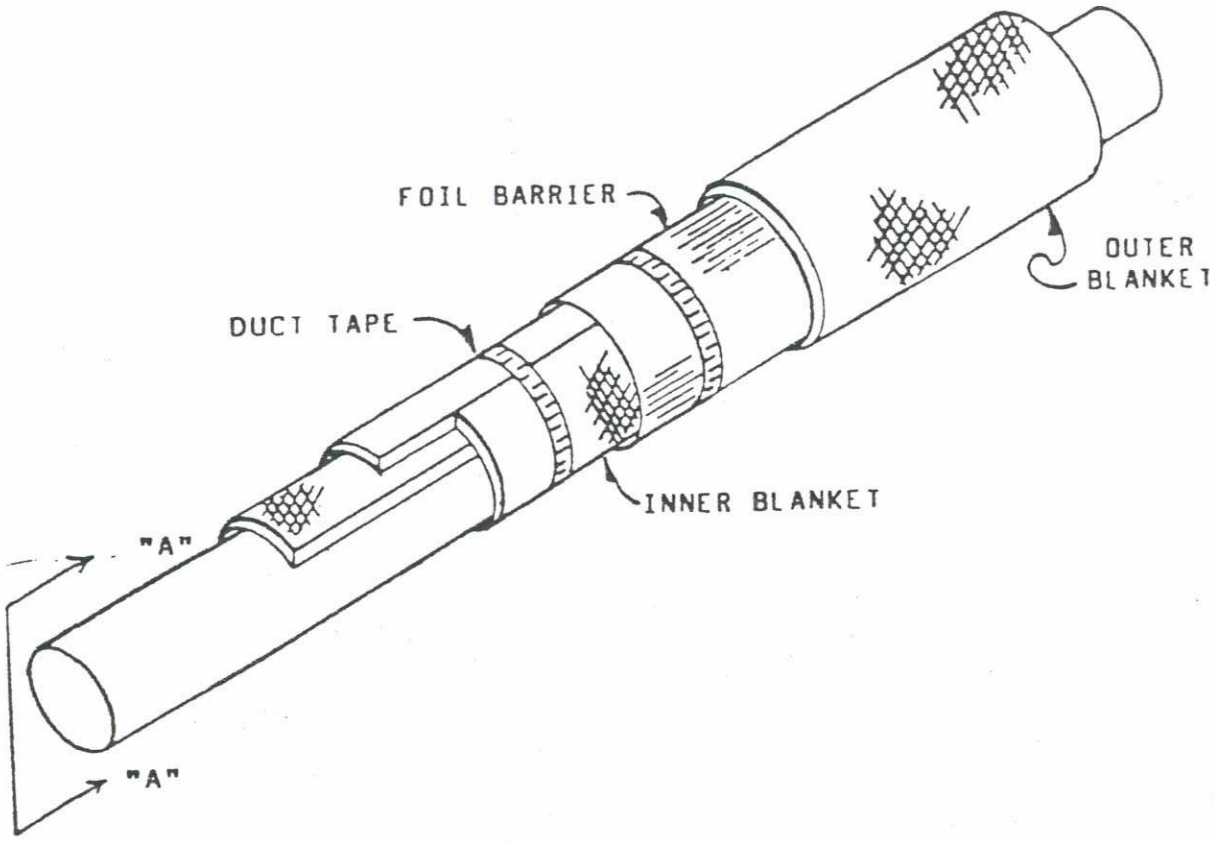

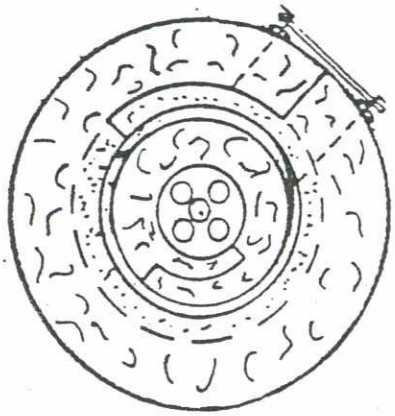

SECTION "A"-"A"

FIGURE - 2

ISSUE DESIGNATION IN THIS COLL .NDICATES CURRENT CHANGE

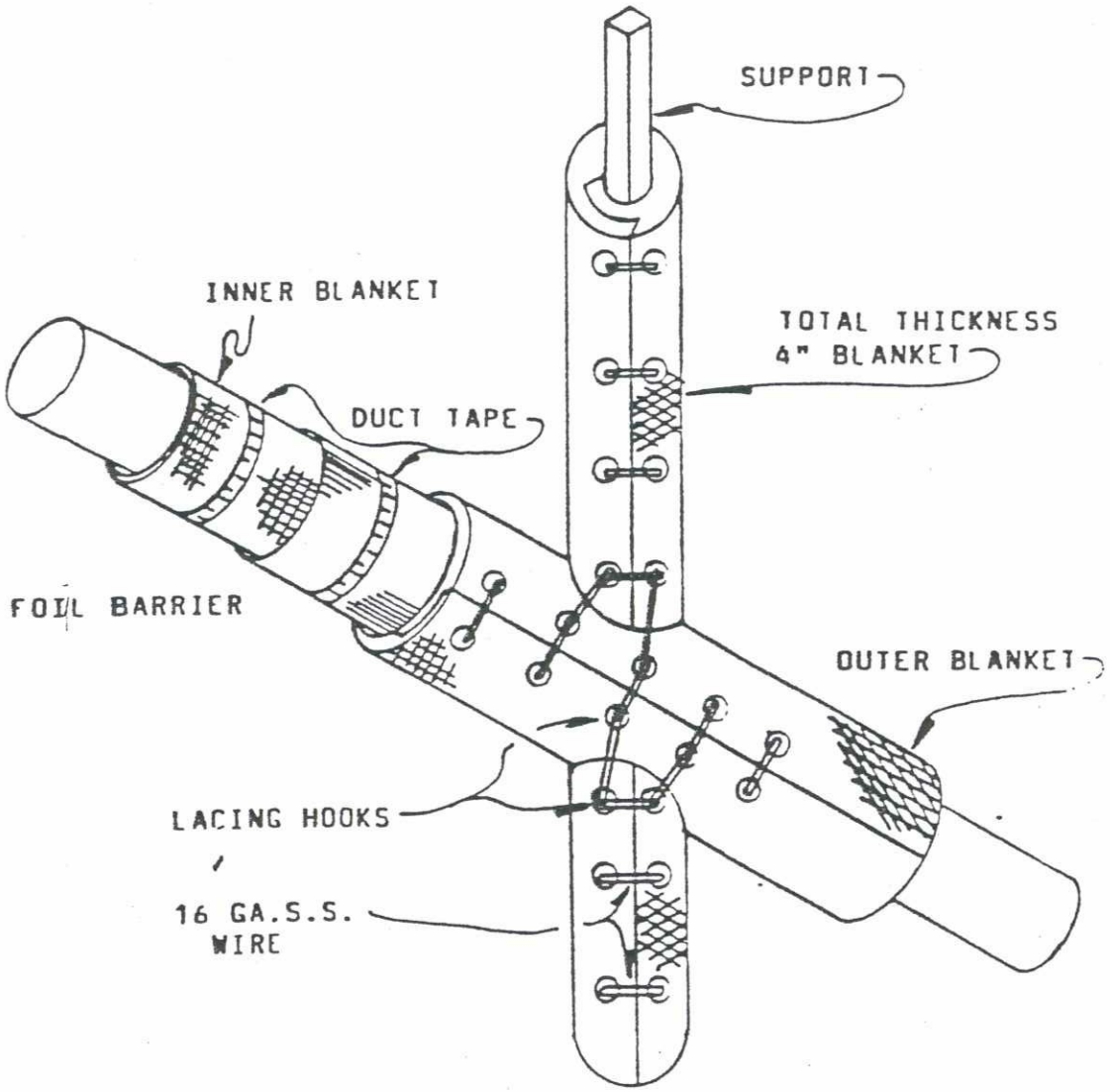

FIGURE - 3

ISSUE DESIGNATION IN THIS COL ..NDICATES CURRENT CHANGE

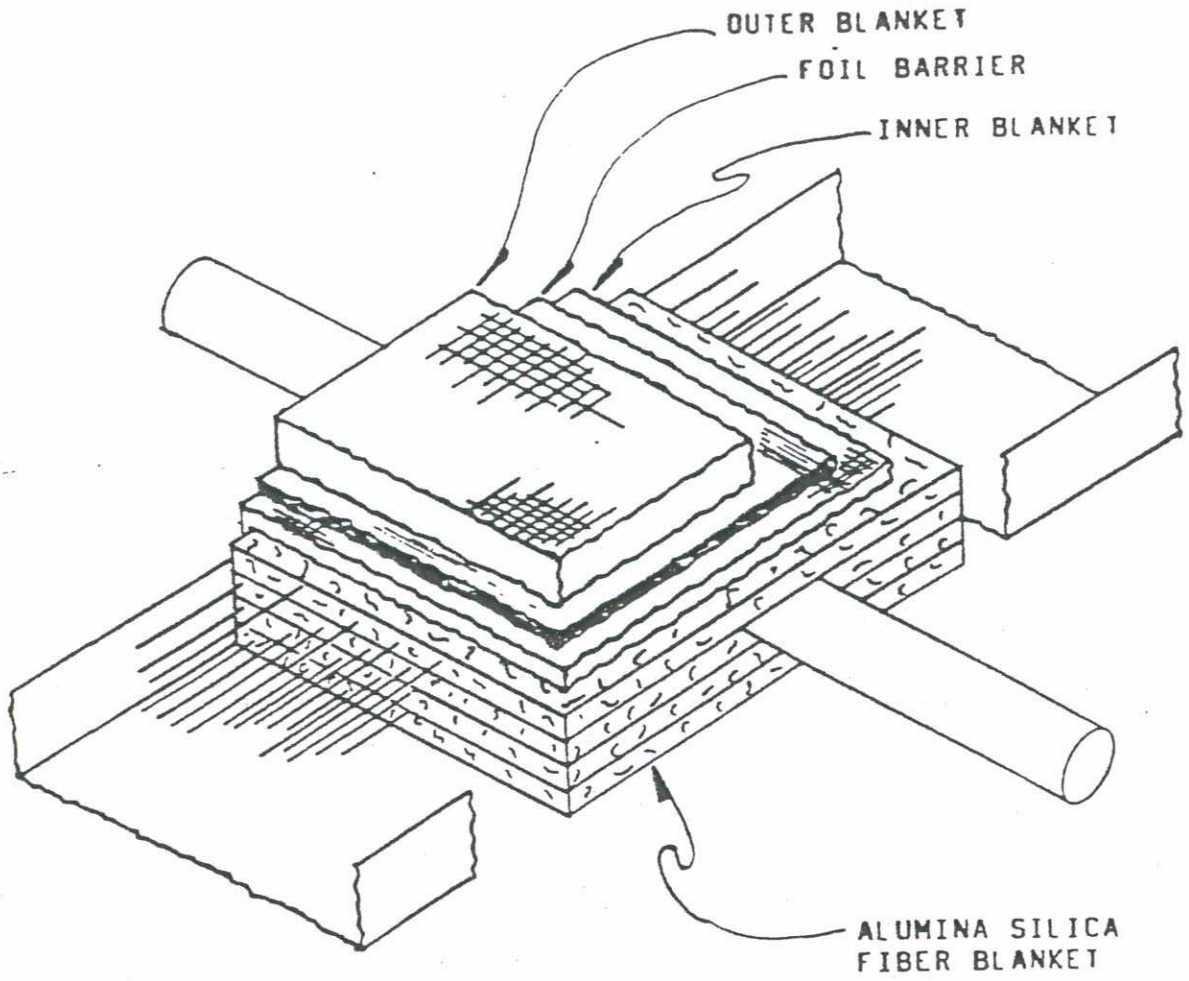

FIGURE - 4

ISSUE DESIGNATION IN THIS COL[illegible]DICATES CURRENT CHANGE

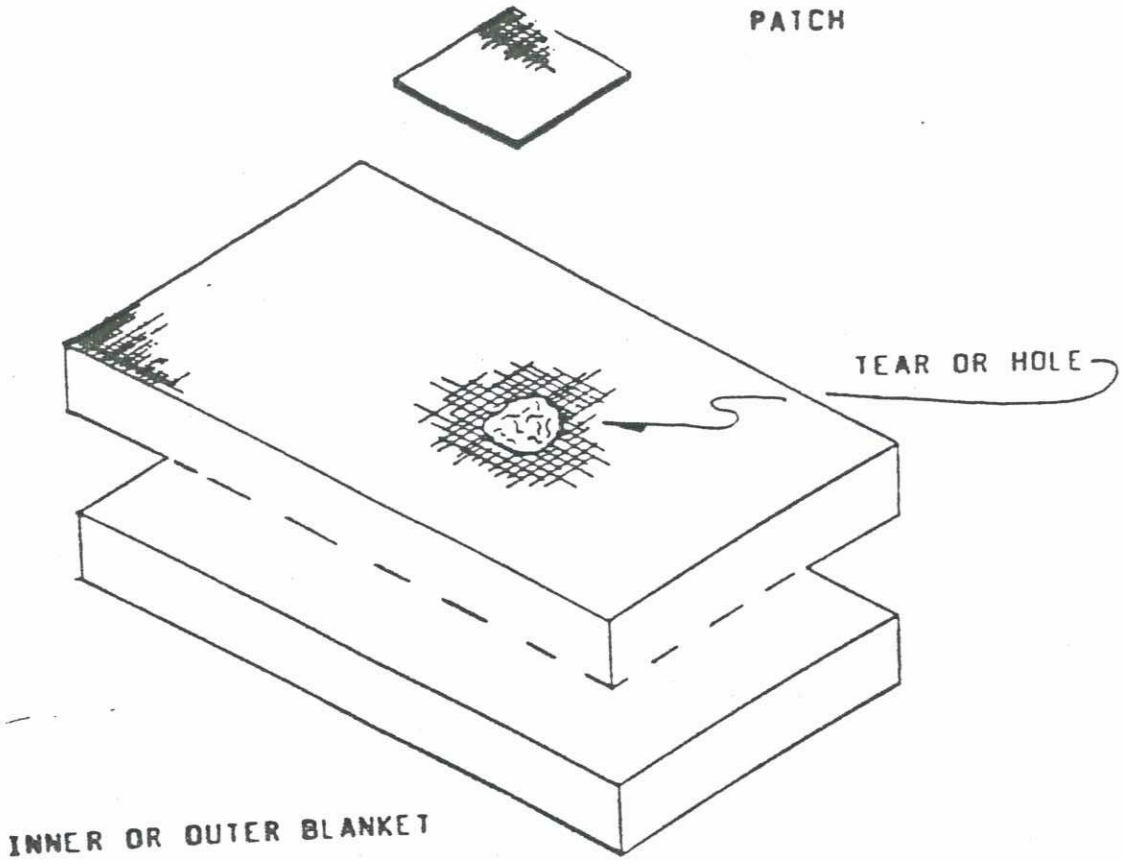

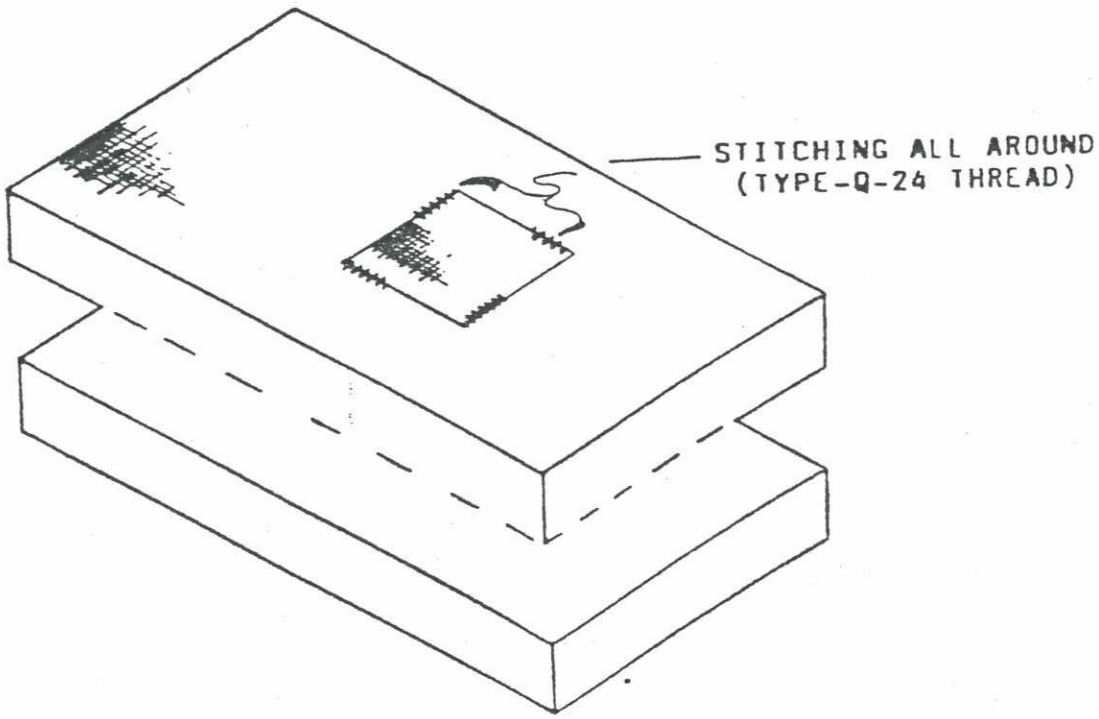

FIGURE - 5

ISSUE DESIGNATION IN THIS COLUMN INDICATES CURRENT CHANGE

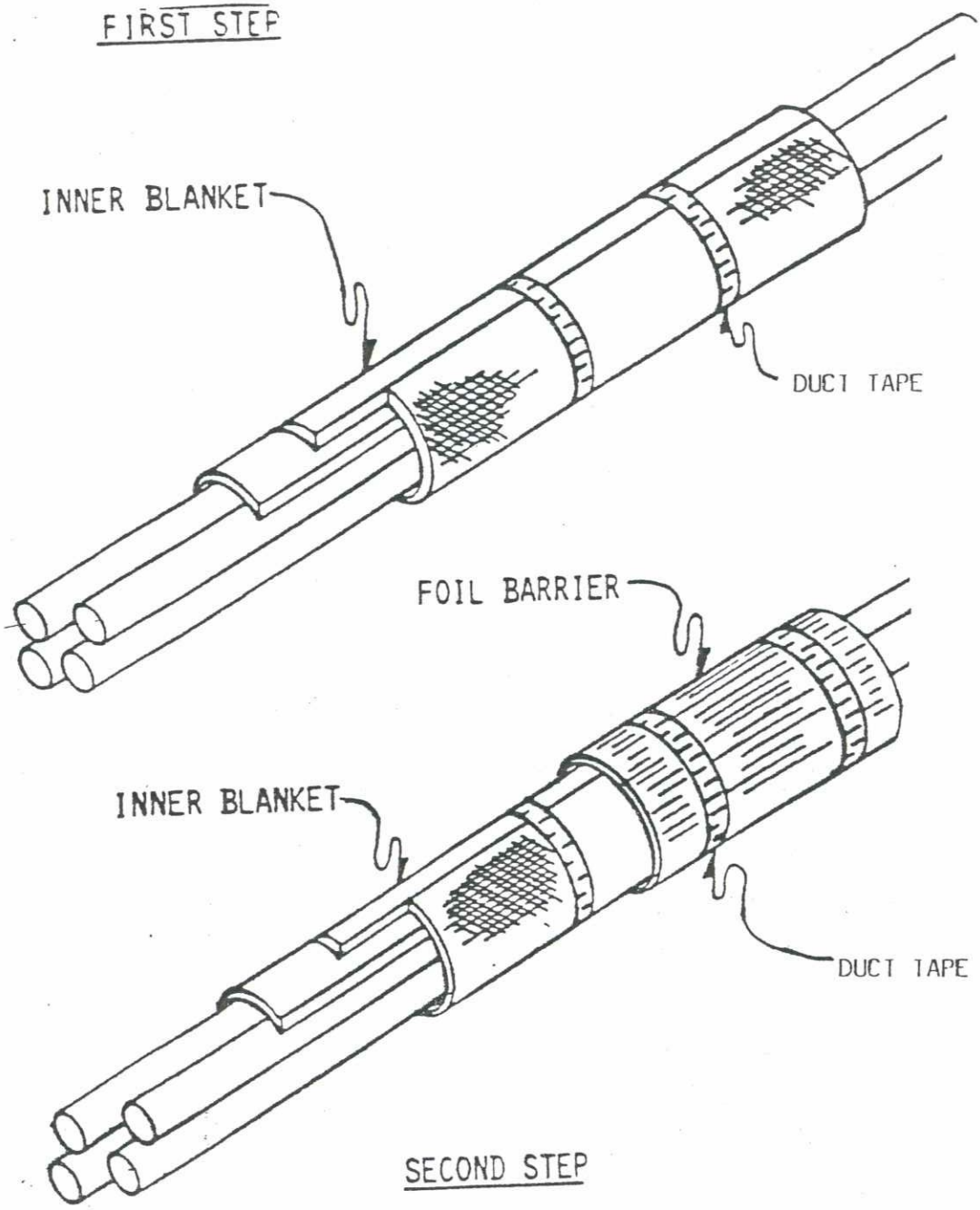

FIGURE 6

ISSUE DESIGNATION IN THIS COL INDICATES CURRENT CHANGE

THIRD STEP

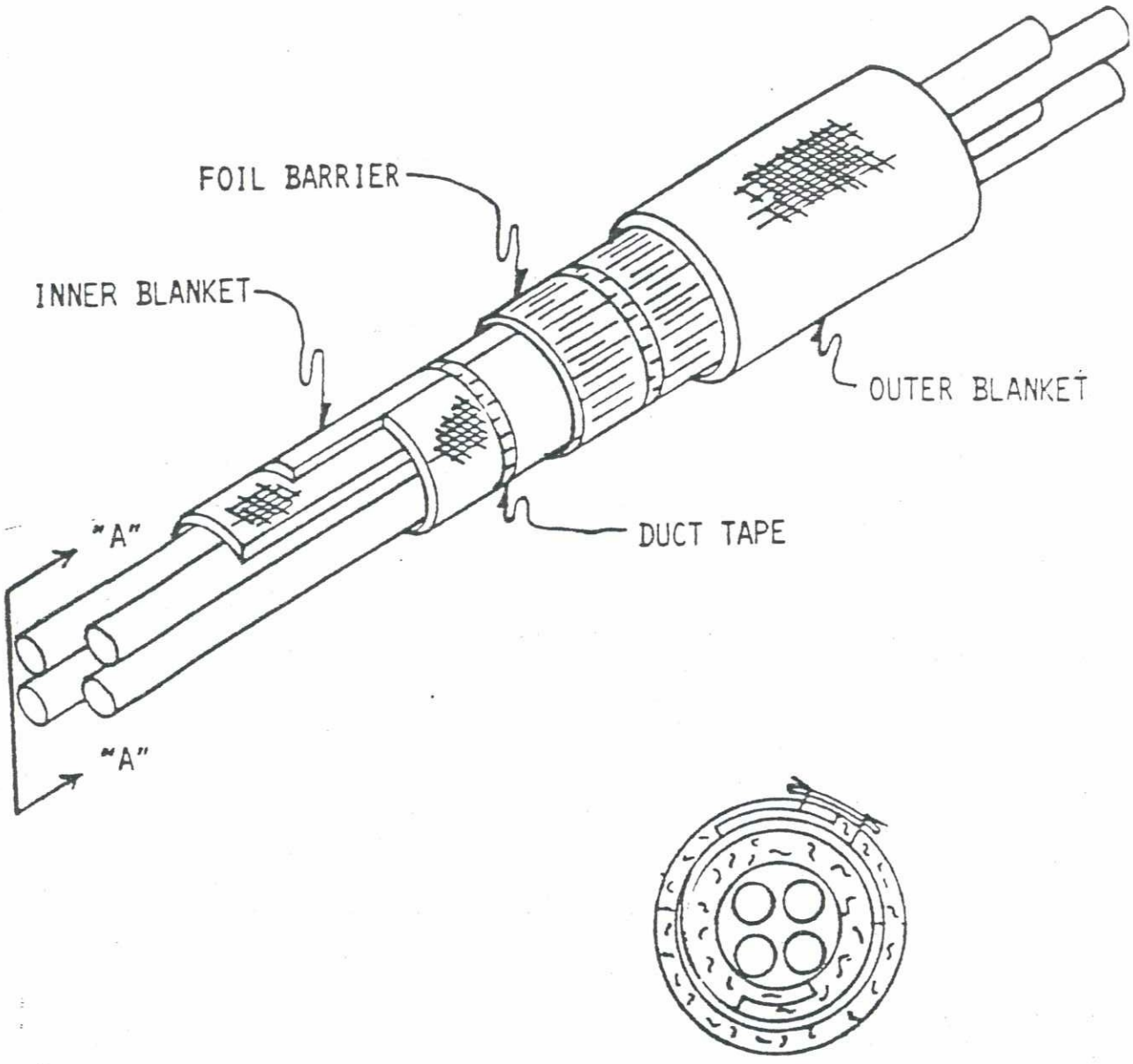

SECTION "A" - "A"

FIGURE 7

ISSUE DESIGNATION IN THIS COLUMN INDICATES CURRENT CHANGE

FABRICATION INSPECTION FOR HEMYC PROTECTIVE WRAP COMPONENTS

1.0 PURPOSE

The purpose of this procedure is to assure that the manufacture of the HEMYC Protective Wrap Components is consistent with the system as tested on the various qualification tests. The Fire Qualification Test, referenced as CTP-1026, consisted of a one (1) hour fire exposure, per ASTM E-119 criteria including hose stream test in accordance with the ANI Information Bulletin No. 5(79) entitled, "ANI/MAERP Standard Fire Endurance Test Method to Qualify a Protective Envelope for Class IE Electrical Circuits".

2.0 SCOPE

This procedure provides the methods and guidelines for the inspection and verification activities performed to ascertain the manufacture and/or fabrication of the protective wrap components is within acceptable standards.

3.0 REFERENCES

3.1 IP-8400.105, Fabrication of HEMYC Cable Protection System Components

3.2 CTP-1026, HEMYC Fire Qualification Test

3.3 American Nuclear Insurers Acceptance dated 08/02/82

4.0 DEFINITIONS

Refer to Quality Assurance/Quality Control terms and definitions contained in the back of the PROMATEC Quality Assurance Program.

5.0 RESPONSIBILITIES

B 5.1 When fabrication is performed at jobsite, the Installer's QUALITY CONTROL PERSONNEL, as trained and certified by PROMATEC, shall be responsible for appropriate inspection, documentation and monitoring activities.

B When fabrication is performed at a separate manufacturing facility, the facility's INSPECTOR shall be responsible for the performance of these activities.

B 5.2 The DOCUMENT CONTROL COORDINATOR shall be responsible to implement and maintain an adequate filing system of the documentation provided by jobsites or as provided from the manufacturing facility Inspector.

ISSUE DESIGNATION IN THIS COLUMN INDICATES CURRENT CHANGE

6.0 PROCEDURE

B The assigned Quality Control Inspector shall perform the verification activities herein prescribed. The Fabrication Inspection Register (QC-61) shall be completed as defined in Item 7.1 of this procedure.

6.1 HOLD POINT ONE

6.1.1 All materials utilized in the construction of the specific order shall have been previously accepted as outlined in QCP-0008. This includes the verification that applicable certification documents were received with shipment or are available at PROMATEC.

6.1.2 If certification documents are not available with the material, an Inspection Report (Form QC-20) shall be instrumented as outlined in QCP-0019. PROMATEC Quality Assurance may elect to authorize use of the subject material after verification from manufacturer that required certification documents are either in transit or have been reviewed and accepted by PROMATEC.

6.1.3 Only approved materials as listed below shall be utilized in the fabrication of HEMYC Cable Protection System Components.

ACCEPTABLE MATERIALS

a. External Fabric

1. SILTEMP WR84CSR Water Repellent, Thermal Barrier Cloth .030 nom. thickness, 18oz/yd(2).

2. Or Approved equal.

b. Internal Fabric

1. Klever 600/6 or J.P. Stevens #332 Fiberglass Cloth, 49" width, 13oz/yd(2).

2. Or Approved equal.

(Internal Fabric may be used on the non-fire side of protection blanket as necessary. If used, external fabric must overlap a minimum of six (6") inches on to non-fire side.)

c. Internal Filler

1. Johns-Manville Cerablanket; 6 or 8 lb density; 1.5 and/or 2.0 inch thickness.

Or

2. Babcock & Wilcox Ceramic Fiber blanket; 6 or 8 lb density; 1.5 and/or 2.0 inch thickness.

Or

ISSUE DESIGNATION IN THIS COLUI IDICATES CURRENT CHANGE

3. Approved equal.

d. Thread

1. Astroquartz Sewing Thread Type Q-24 Teflon coated approximately .020" diameter; Breaking strength - 20lbs.

Or

2. Alphaquartz Sewing Thread Type Q-24 Teflon coated approximately .020" diameter; Breaking strength - 20lbs.

Or

3. Approved equal.

6.2 HOLD POINT TWO

Refer to IP-8400.105 for specific fabrication requirements.

In Process Inspection

6.2.1 The assigned Quality Control Inspector shall periodically inspect on a random basis, compliance to the manufacture of Protective Wrap Components as outlined in Items 6.3.1, 6.3.2 and 6.3.3 of IP-8400.105.

As a minimum requirement, all wrap assemblies constructed shall be 100% Quality Control inspected the first week of fabrication, and a minimum of one day's production per week thereafter.

6.2.2 Verification that each wrap assembly is properly identified and marked as specified in Item 6.5 of IP-8400.105 shall be performed.

B 6.2.3 Verification that the Traceability ID Register (QC-60) is accurately completed for each wrap assembly as defined in Item 7.3 of this procedure.

6.3 HOLD POINT THREE

6.3.1 Each wrap component (blanket) shall be physically inspected by the assigned Quality Control Inspector prior to final acceptance from fabricator. This inspection shall verify conformance to the finished dimension requirements as specified on the applicable fabrication order.

7.0 ATTACHMENTS

7.1 Instructions for the completion of Form QC-61, Fabrication Inspection Register

7.2 Form QC-61

7.3 Instructions for the completion of Form QC-60, Traceability ID Register

7.4 Form QC-60

QCP-10002
ATTACHMENT 7.1

INSTRUCTIONS FOR COMPLETION OF FABRICATION INSPECTION REGISTER (FORM QC-61)

1. REPORT NUMBER - This is a two part number utilizing the numerical portion of the Project Number and the numerical sequence of the individual sequence of the individual report sheet, i.e., 274/03. This defines the third QC-61 used on Project No. FS-274.

2. PROJECT NAME - Name of Project or Plant.

3. PROJECT NUMBER - The PROMATEC Job Number (i.e., 0027-CM).

4. FABRICATOR - The name of the company fabricating blanket.

5. BLANKET NUMBER/ BLANKET FAB ORDER NO. - Identification of assigned blanket number per blanket fab order (Form QC-59).

6. QC-60 NUMBER - Number of the QC-60, Traceability ID Register for reference of traceability.

QC HOLD POINT ONE - MATERIAL RECEIVING

7. ACCEPT/REJECT - Insert appropriate check mark upon verification that only accepted materials as prescribed in QCP-10002 are utilized.

8. BY - Initials of the assigned Quality Control Representative performing this inspection.

9. DATE - Date of performance of this inspection.

QC HOLD POINT TWO - IN PROCESS INSPECTION

The assigned Quality Control Inspector shall periodically spot check on a random basis, compliance to the fabrication of Protective Wrap Components as outlined in IP-8400.105.

As a minimum requirement, all wrap assemblies constructed shall be 100% Q.C. inspected the first scheduled week of fabrication, and a minimum of one day's production per week thereafter.

When this inspection is performed, Items 12 and 13 (below) shall be completed.

10. ACCEPT/REJECT -

(a.) External and Internal fabrics are cut to proper dimensions, as determined by fabricator to assure proper finished dimensions as specified on the applicable fabrication order (Form QC-59).

(b.) Stitching is performed per IP-8400.105, Item 6.3.1.

(c.) Filler material is proper size to assure proper finished dimension per IP-8400.105, Item 6.3.2.

(d.) Fabric at open end of envelope is rolled under and double stitched per IP-8400.105, Item 6.3.3.

(e.) Longitudinal stitching performed per IP-8400.105, Item 6.3.4.

(f.) Identification markings are performed per IP-8400.105, Item 6.5.

11. BY - Initials of inspector performing documentation.

12. DATE - Date of documentation of QC HOLD POINT TWO

QC HOLD POINT THREE & FINAL ACCEPTANCE

13. ACCEPT/REJECT - Insert appropriate check mark upon acceptance or rejection of Completed Wrap Assembly.

14. BY - Initials of inspector performing inspection.

15. DATE - Date of Final Acceptance of Completed Wrap Assembly.

PROMATEC

PROGRESSIVE MATERIALS AND TECHNOLOGIES, INC.

FABRICATION INSPECTION REGISTER

REPORT NUMBER (2)

PROJECT NAME

PROJECT NUMBER (3)

FABRICATOR (4)

QCP-10002
B ISSUE

ATTACHMENT 7.2

MT BARRIER WRAP	FORM	HOLD POINT ONE				HOLD POINT TWO				HOLD POINT THREE			
COMPONENT / BLANKET	QC-60	MATERIAL INSPECTION				FABRICATION INSPECTION				FINAL INSPECTION			
IDENTIFICATION NUMBER	NUMBER	REJECT	ACCEPT	BY	DATE	REJECT	ACCEPT	BY	DATE	REJECT	ACCEPT	BY	DATE
(5)	(6)	(7)		(8)	(9)	(10)		(11)	(12)	(13)		(14)	(15)

QCP-10002
ATTACHMENT 7.3

INSTRUCTIONS FOR COMPLETION OF TRACEABILITY ID REGISTER (FORM QC-60)

1.	REPORT NUMBER -	This is a two part number utilizing the numerical portion of the Project Number and the numerical sequence of the individual sequence of the individual report sheet, i.e., 274/02. This defines the second QC-60 used on Project No. FS-274.
2.	PROJECT NAME -	Name of Project or Plant.
3.	PROJECT NUMBER -	The PROMATEC Job Number (i.e., 0027-CM).
4.	FABRICATOR -	The name of the company fabricating blanket.
5.	BLANKET NUMBER/ BLANKET FAB ORDER NO. -	Identification of assigned blanket number per blanket fab order (Form QC-59).
6.	EXTERNAL FABRIC -	Name of external fabric manufacturing company, type of fabric, lot number of external fabric and receiving report number.
7.	INTERNAL FABRIC -	Name of internal fabric manufacturing company, type of fabric, lot number of internal fabric and receiving report number.
8 & 9.	FILLER MATERIAL -	Name of filler material manufacturing company, type of material, lot number of filler material and receiving report number.
10.	THREAD -	Name of thread manufacturing company, type of material, lot number of thread and receiving report number.
11.	HARDWARE -	Types of hardware and receiving report numbers.
12.	INSPECTOR -	Initials of inspector performing documentation, and date inspection performed.

PROMATEC

PROGRESSIVE MATERIALS AND TECHNOLOGIES, INC.

TRACEABILITY ID REGISTER

REPORT NUMBER (1)

PROJECT NAME (2)

PROJECT NUMBER (3)

FABRICATOR (4)

QCP-10002
ISSUE B

MT BARRIER WRAP	EXTERNAL FABRIC		INTERNAL FABRIC		FILLER MATERIAL		FILLER MATERIAL		THREAD		HARDWARE		INSPECTOR
MFG													
TYPE													
IDENTIFICATION NO.	I.D. NO.	R.R.#	I.D. NO.	R.R.#	I.D. NO.	R.R.#	I.D. NO.	R.R.#	I.D. NO.	R.R.#	R.R.#	R.R.#	BY / DATE
(5)	(6)		(7)		(8)		(9)		(10)		(11)		(12)

ATTACHMENT 7.4

Page 291

ISSUE DESIGNATION IN THIS COLL INDICATES CURRENT CHANGE

INSTALLATION INSPECTION OF CRITERIA FOR HEMYC PROTECTIVE WRAP COMPONENTS

1.0 PURPOSE

The purpose of this procedure is to assure that the installation of the HEMYC Protective Wrap System components is inspected to verify consistency with the system as tested on the various qualification tests. The Fire Qualification Test, referenced as CTP-1026, consisted of a One (1) Hour Fire Exposure, per ASTM-119 criteria, including hose stream test in accordance with the American Nuclear Insurers Information Bulletin No. 5(79) entitled, "ANI/MAERP Standard Fire Endurance Test Method to Qualify a Protective Envelope for Class IE Electrical Circuits."

2.0 SCOPE

This procedure provides the inspection criteria to enable the assigned Quality Control Inspector to perform adequate verification of compliance to quality requirements for the fabrication of HEMYC Protective Wrap System components.

3.0 REFERENCES

3.1 10CFR50, Appendix R

3.2 ANI Bulletin No. 5(79)

3.3 CTP-1026, HEMYC Fire Qualification Test

3.4 ANI Acceptance dated 08/02/82

3.5 IP-8400.101, Installation of HEMYC Protective Wrap System - Straight Sections

3.6 IP-8400.102, Installation of HEMYC Protective Wrap System - Curved Sections of Cable Tray

3.7 IP-8400.103, Installation of HEMYC Protective Wrap System onto Single or Multiple Conduits

3.8 IP-8400.104, Repair and Installation of the HEMYC Protective Wrap System Around Interferences and Obstructions.

3.9 IP-8400.105, Manufacture of HEMYC Cable Protection System Components

3.10 IP-8400.106, Installation of Firestops and Terminations within the HEMYC Protective Wrap System for Cable Tray(s) and Conduit(s)

3.11 IP-8400.107, Installation of HEMYC Protective Wrap System - Multiple Cable Trays

4.0 DEFINITIONS

None

5.0 RESPONSIBILITIES

5.1 The Installer's QUALITY CONTROL PERSONNEL, as trained and certified by PROMATEC, shall be responsible for appropriate inspection, documentation and monitoring activities.

5.2 The DOCUMENT CONTROL COORDINATOR shall be responsible to implement and maintain an adequate filing system of the documentation herein prescribed.

6.0 PROCEDURE

Inspection and acceptance criteria of the framework installation for cable tray and conduit assemblies. The assigned Quality Control Inspector shall inspect the installed framework for compliance to requirements established in the applicable PROMATEC procedures and as defined herein.

6.1 QUALITY CONTROL HOLD POINT NO. ONE

6.1.1 Verify that clamping devices are adequate for the specific type and size of cable tray.

6.1.2 Clamps must be used in sets. All clamps in a single set must be either all locking type or all friction type. NO INTERMIXING of types in a single set is acceptable (Refer to Figure 1 and 2).

6.1.3 Locking type clamps must be utilized at least every seventh clamp set.

6.1.4 Clamp sets are located on approximate eighteen (18") inch centers.

6.1.5 Locknuts shall be securely tightened to secure frame to cable tray. Locknuts shall only be used once.

6.1.6 Verify that a minimum of two (2") inch Dead Air Space is maintained between side, bottom and top of cable tray and outside of frame on all configurations, unless approved by FCR. (See Figure 3.)

ISSUE DESIGNATION IN THIS COLUI DICATES CURRENT CHANGE

ISSUE DESIGNATION IN THIS COLU NDICATES CURRENT CHANGE

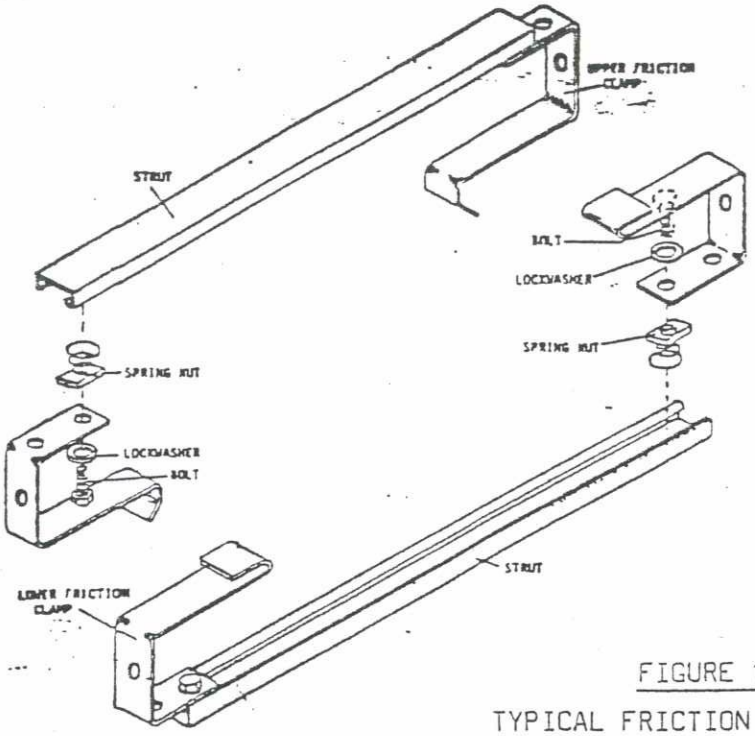

FIGURE 1

TYPICAL FRICTION CLAMP AND
TYPICAL INSTALLATION

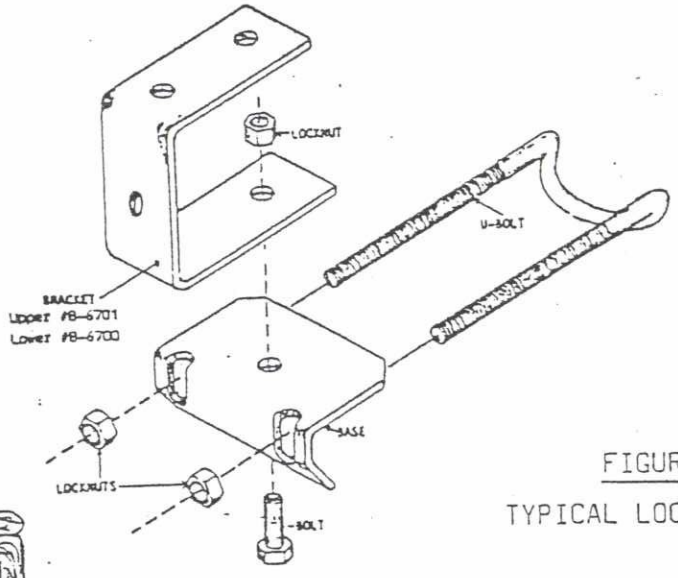

FIGURE 2

TYPICAL LOCKING CLAMP

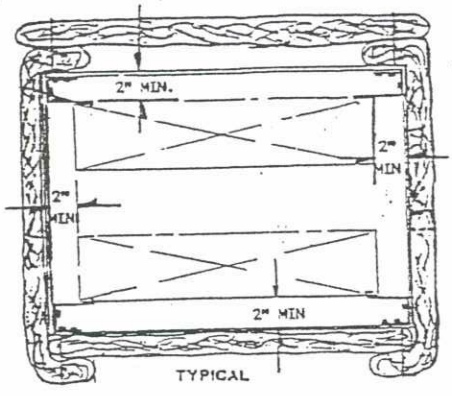

FIGURE 3

2" DEAD AIR SPACE
Single and Multiple Tray Configurations

6.1.7 Verify that top and bottom rails have blanket anchors spaced at a maximum nine (9") inch between centers throughout (Refer to Figure 4).

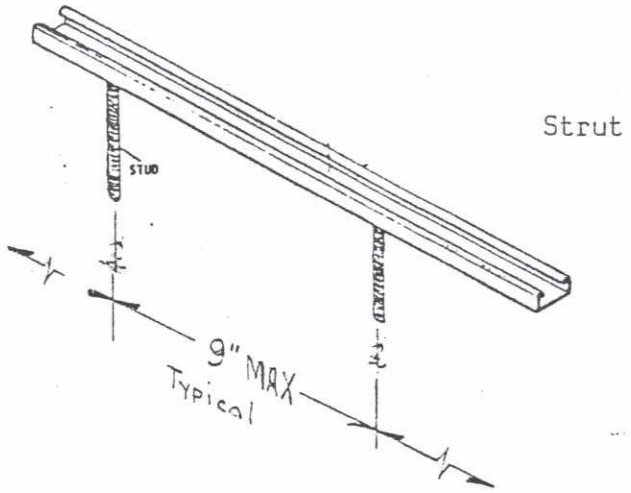

FIGURE 4
BLANKET ANCHOR SPACING

6.1.8 If concrete anchors are utilized to attach blankets to wall, ceiling or floor, they shall be a site-approved type. These anchors shall be spaced on a maximum nine (9") inch between centers throughout.

6.1.9 In the case of direct wrap on conduit, verify that finger strap is firmly attached to conduit per IP-8400.103 (if applicable).

6.1.10 Verify that frame is firmly attached to cable tray and that all nuts are securely tightened.

6.2 QUALITY CONTROL HOLD POINT NO. TWO

Inspection and acceptance criteria for installation of blanket wrap for single and multiple cable trays and conduits.

6.2.1 Assure that blanket to be installed is blanket number assigned for the designated section of cable tray or conduit.

6.2.2 Verify that a minimum of two (2") inches between center of anchors and edges of blanket on overlaps at top, bottom, and side of cable trays is maintained. (See Figure 5.)

6.2.3 Verify that either a eight (8") inch collar is on joints of conduit blanket wrap or that blanket wraps extend over adjoining blanket a minimum of four (4") inches. (See Figure 6.)

ISSUE DESIGNATION IN THIS COLUMN INDICATES CURRENT CHANGE

D

ISSUE DESIGNATION IN THIS COLUM DICATES CURRENT CHANGE

D

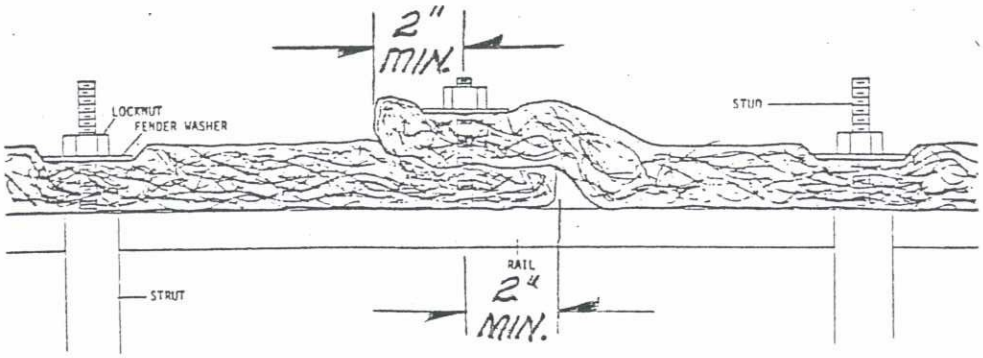

FIGURE 5

TYPICAL OVERLAP

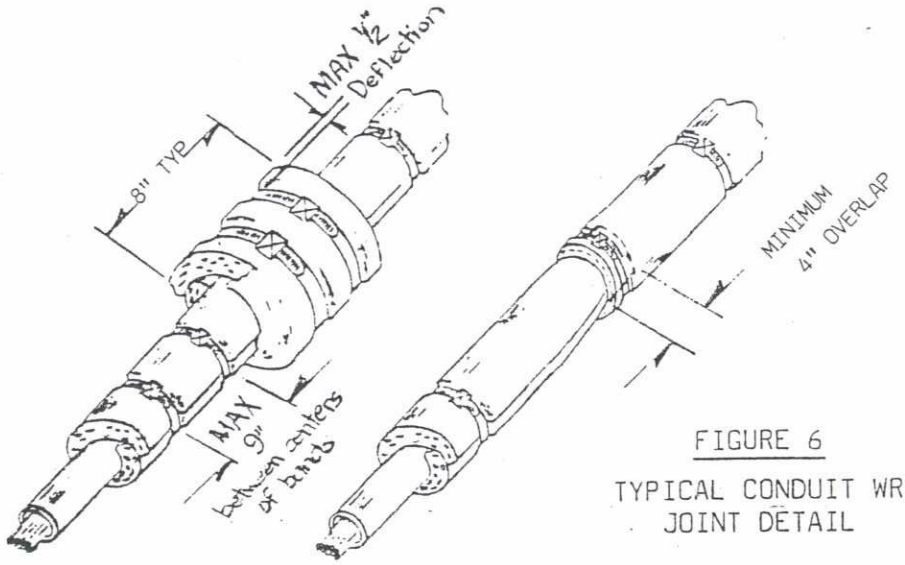

FIGURE 6

TYPICAL CONDUIT WRAP JOINT DETAIL

6.2.4 Verify that either stainless steel strapping or stainless steel band clamps are attached to blanket wrap on a maximum nine (9") inch center on conduit blanket wrap. If single conduit is attached to concrete surface, verify that concrete anchors are of site approved type. These anchors shall be spaced on a maximum of nine (9") inches between centers throughout. (See Figure No. 7.) Banding shall be a minimum gauge of .015 and a minimum width of one-half (1/2") inches.

ISSUE DESIGNATION IN THIS COLUMN INDICATES CURRENT CHANGE

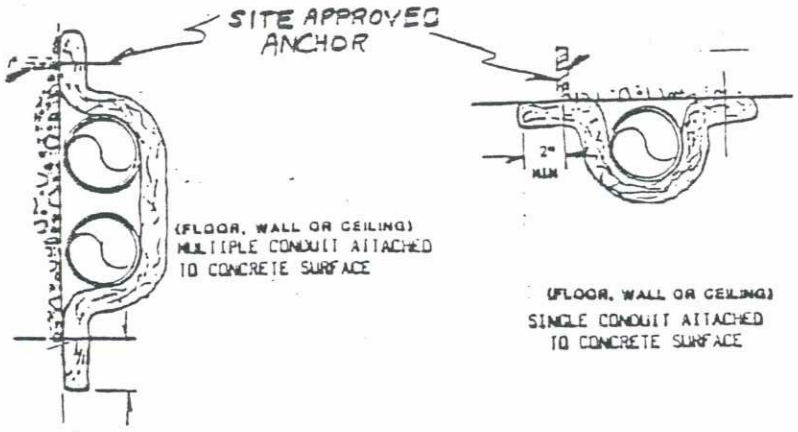

FIGURE 7

CONCRETE ATTACHMENT

6.2.5 Verify that termination of cable tray (floor, ceiling or wall) complies with IP-8400.106, Section 6.2. Check to assure that frame work stops within six (6") inches of surface and ensure that wraps are long enough to extend onto the surface. Wraps shall be attached to surface using the methods outlined in IP-8400.104, Section 6.3 (Refer to Figure 8).

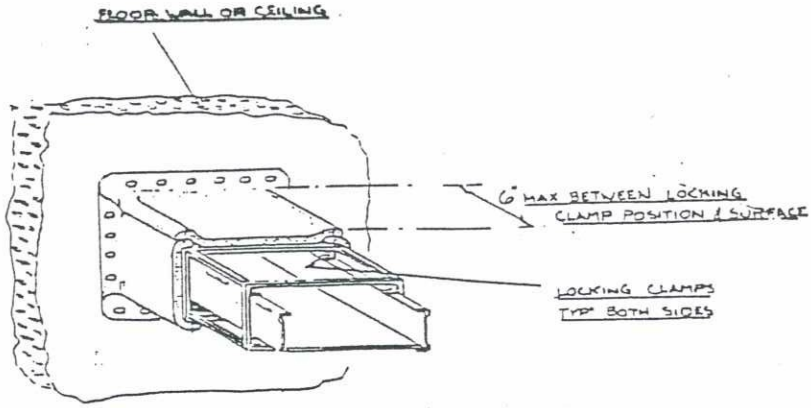

FIGURE 8

TYPICAL TERMINATION OF CABLE TRAY AT WALL, FLOOR OR CEILING

ISSUE DESIGNATION IN THIS COLUM. DICATES CURRENT CHANGE

6.2.6 Verify that termination of conduit (floor, ceiling or wall) complies with IP-8400.106, Section 6.3. Assure that flange portion of termination collar is firmly attached onto concrete nuts and lock nuts are firmly tightened and that if gaps exist, they have plumbers tape or equivalent installed as outlined in IP-8400.104, Section 6.3.3 (Refer to Figure 9).

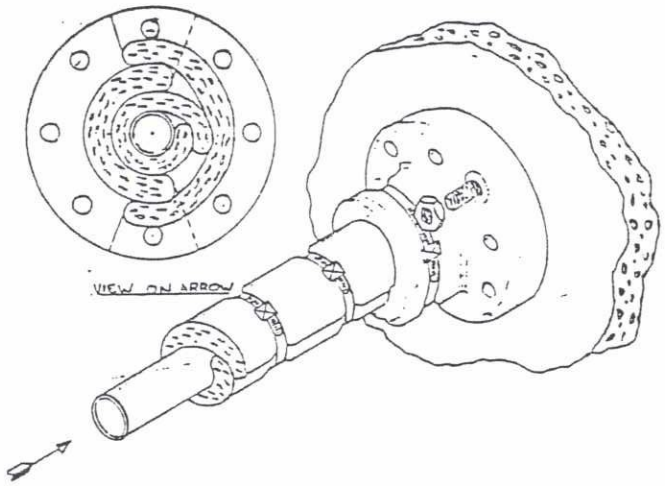

FIGURE 9

TYPICAL TERMINATION OF CONDUIT AT WALL, FLOOR OR CEILING

6.3 If fire stops are required on cable tray that ends with cable protruding, verify that firestops comply with IP-8400.106, Section 6.1.

6.3.1 Assure that a minimum of twelve (12") inch width layer of ceramic blanket is wrapped around bottom, sides and top of cable tray. Tray shall be filled with bulk fiber to that width. Two bands must be applied at four to six (4" - 6") inches apart and compressing both wraps and ceramic fiber filler. (See Figure 10 and 11.)

NOTE: Completed installation shall reflect a good workmanship product with tight folds and secured seams and bands.

ISSUE DESIGNATION IN THIS COLU NDICATES CURRENT CHANGE

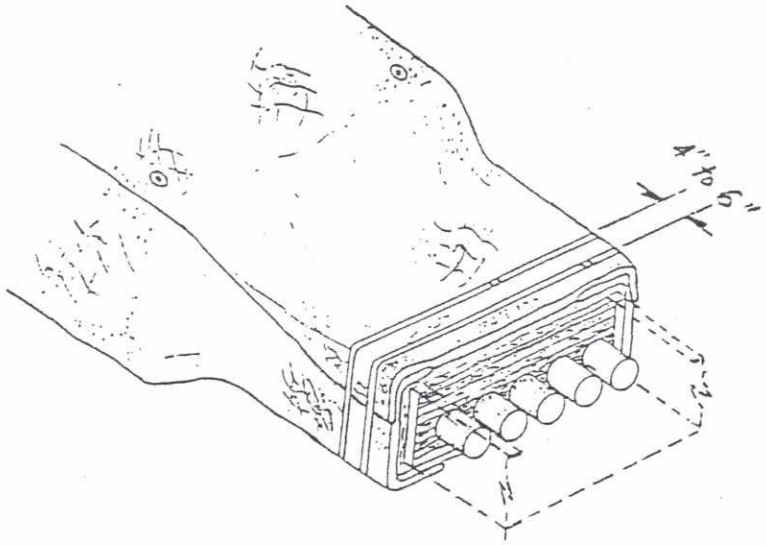

FIGURE 10

TYPICAL TERMINATION OF CABLE TRAY PROTECTIVE SYSTEM
NOT AT WALL, FLOOR OR CEILING (FIRESTOP)

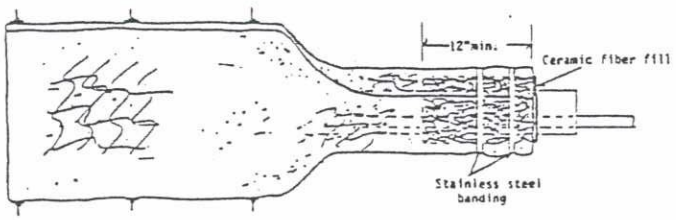

FIGURE 11

TYPICAL TERMINATION SHOWING CERAMIC BLANKET AND
BULK FIBER FILL. (FIRESTOP)

7.0 ATTACHMENTS

D 7.1 PROMATEC Form QC-62 with instructions.

7.2 ADDENDDUM I

HOLD POINT INSPECTION & CLIENT FINAL SIGNOFF REPORT

(QCP-10003)

PROJECT NAME: 2

PROJECT NUMBER: 3

REPORT NO. 1

STRUCTURAL INSPECTION

IDENTIFICATION NUMBER CABLE TRAY/CONDUIT	LOCATION - AREA/ELEVATION/ROOM ETC.	QC HOLD POINTS - STRUCTURAL INTEGRITY						VISUAL INSPECTION & RELEASE			
		1 DEAD AIR SPACE-2"	2 CLAMP DEVICES	3 FRAME SECURE	4 BLANKET ANCHORS	5 CONCRETE ANCHORS	6 OTHER ---------	PASS	REJECT	DATE	BY
4	5	6	7	8	9	10	11	12	13	14	15

WRAP INSTALLATION INSPECTION & ACCEPTANCE

BLANKET NO./FAB ORDER NO.									QC HOLD POINTS - WRAP INSTALLATION				QC HOLD POINT 6 & FINAL ACCEPTANCE				
COND.	CABLE TRAY(S)								1 OVERLAPS	2 WRAP RETAINE	3 BANDING	4 TERMINATION	VISUAL INSPECTION			FINAL ACCEPTANCE	
	TOP	BOT.	SIDE	SIDE	SIDE	SIDE	SIDE	SIDE	4" MIN	INTACT	DEFLECT	ADEQUATE	ACCEPT	HOLD	REJECT	DATE	BY
16	17	18	19		21		23		25	26	27	28	29	30	31	32	33

FORM QC-82/REV. 1 07-20-95

QCP-10003
Attachment 7.1

QCP-10003
ATTACHMENT 7.1

HOLD POINT INSPECTION
AND
FINAL SIGNOFF REPORT

1.	Report Number -	This is a two part number utilizing the numerical portion of the project number and the numerical sequence of the individual report sheet, i.e., 274/04 (This defines the fourth QC-62 used on Project FS-274).
2.	Project Name -	Name of project or plant.
3.	Project Number -	The PROMATEC assigned job number, i.e., FS-274.
4.	Identification Number Cable Tray/Conduit -	Cable tray identification number and conduit identification number obtained from customer supplied information.
5.	Location/Area/Elevation/ Room/etc. -	Location of Area, Elevation, Room, etc., obtained from customer supplied information.
6.	Dead Air Space - 2" -	Verify that a minimum of two (2") inch Dead Air space is maintained between side, bottom and top of cable tray and outside of frame on all configurations per QCP-10003, page 3, Section 6.1.
7.	Clamp Devices -	Verify that clamps are in sets. Clamps in a single set must be either locking type or all friction type. No intermixing of types in a single set is acceptable per QCP-10003, page 3, Section 6.1.2, Figures 1 & 2. If acceptable, designate with a check mark.
8.	Frame Secure -	Verify that frame is firmly attached to cable tray and that all nuts are securely tightened. If acceptable designate with a check mark.
9.	Blanket Anchors -	Verify that top and bottom rails have blanket anchors spaced on a maximum nine (9") inches between centers throughout, per QCP-10003, page 5, Section 6.1.7, Figure 4.
10.	Concrete Anchors -	Verify that concrete anchors are site approved, maximum spacing of nine (9") inches between centers allowed. If acceptable designate with a check mark.

11. Other - Mark N/A. This space is for other Hold Points, as required.

12. Pass - If frame is secured to frame, all nuts firmly tightened, and visual inspection verifies that frame work is structurally sound, designate by check mark.

13. Reject - If above is rejected designate by check mark.

14. Date - Date of visual inspection and release.

15. By - Name of inspector performing inspection.

BLANKET NO./FAB ORDER NUMBER FOR CABLE TRAY(S)

16. Conduit - Number of conduit assigned by customer supplied information. Refer to Number (4) identification of cable tray or conduit above. If cable tray number, mark N/A.

17. Top - Identification of blanket number and fab order number for top section.

18. Bottom (Bot.) - Identification of blanket number and fab order number for bottom section.

19 thru 24 (Side) - Identification of blanket number and fab order number of required side sections. If side sections identification is not required, mark N/A.

QC HOLD POINTS & FINAL ACCEPTANCE

25. Overlaps - Overlaps four (4") inches minimum, verify that top, bottom, and side sections overlap each other by at least four (4") inches minimum. If accepted, designate by check mark.

26. Retainer Intact - Verify that Retainers are tight and secure, nuts, lock nuts, finger strap clips, etc. If accepted, designate by check mark.

27. Banding Spacing Deflection - Verify that the maximum deflection of the banding into the blanket is a maximum of one-half (1/2") inches. If so, designate by check mark.

28. Termination Adequate - Verify that the termination of the cable tray (floor, ceiling, or wall) complies with Procedure No. 8400.106, Section 6.2. Verify also that all nuts are securely tightened. If so, designate by a check mark.

29. Accept Visual Inspection - Insert check mark upon acceptance of completed blanket assembly.

30. Hold - Insert check mark if blanket assembly is incomplete or repairs are needed. Indicate appropriate action on a separate page if necessary.

31. Reject - Insert check mark if blanket assembly is rejected. Initiate appropriate action.

32. Date - Date inspection was performed.

33. By - Name of inspector performing inspection.

Page 303

ADDENDUM

TO QCP-10003

ROCHESTER GAS & ELECTRIC

SITE SPECIFIC - GINNA STATION

ISSUE DESIGNATION IN THIS COLL INDICATES CURRENT CHANGE

PART A - Figure 6 / Typical Conduit Wrap Joint Detail

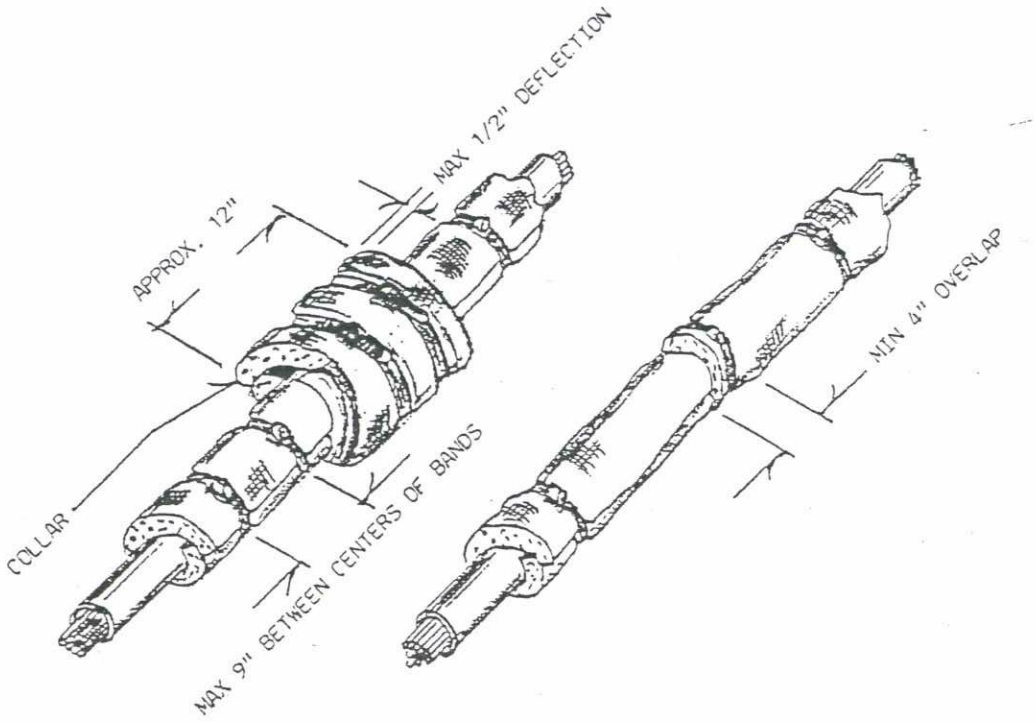

ISSUE DESIGNATION IN THIS COLL NDICATES CURRENT CHANGE

PART B - Figure 12 & Figure 13

Rochester Gas & Electric Note: Due to a pipe interference over Tray 111 the two (2") inch dead air space may be reduced as needed as shown on Figure 12 and 13 below.

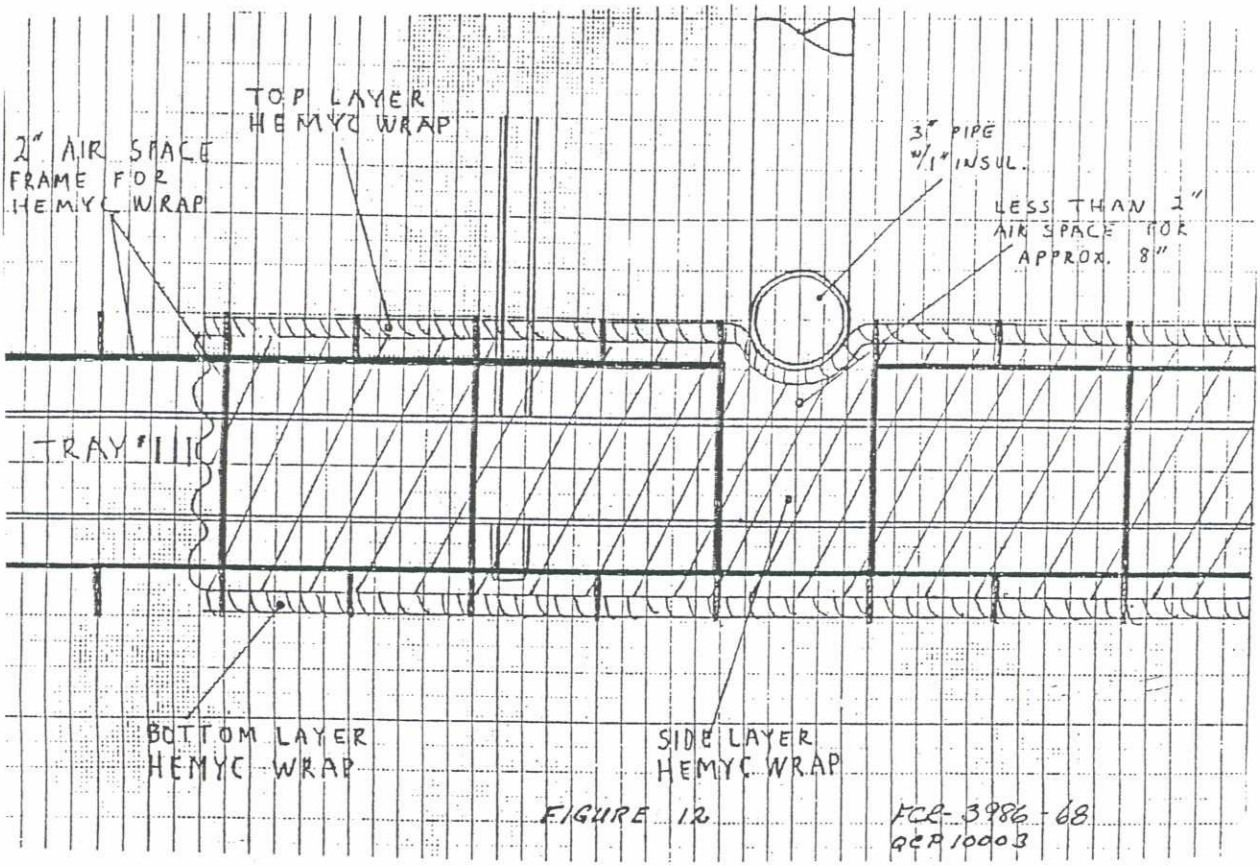

FIGURE 12

FCR-3986-68
QCP 10003

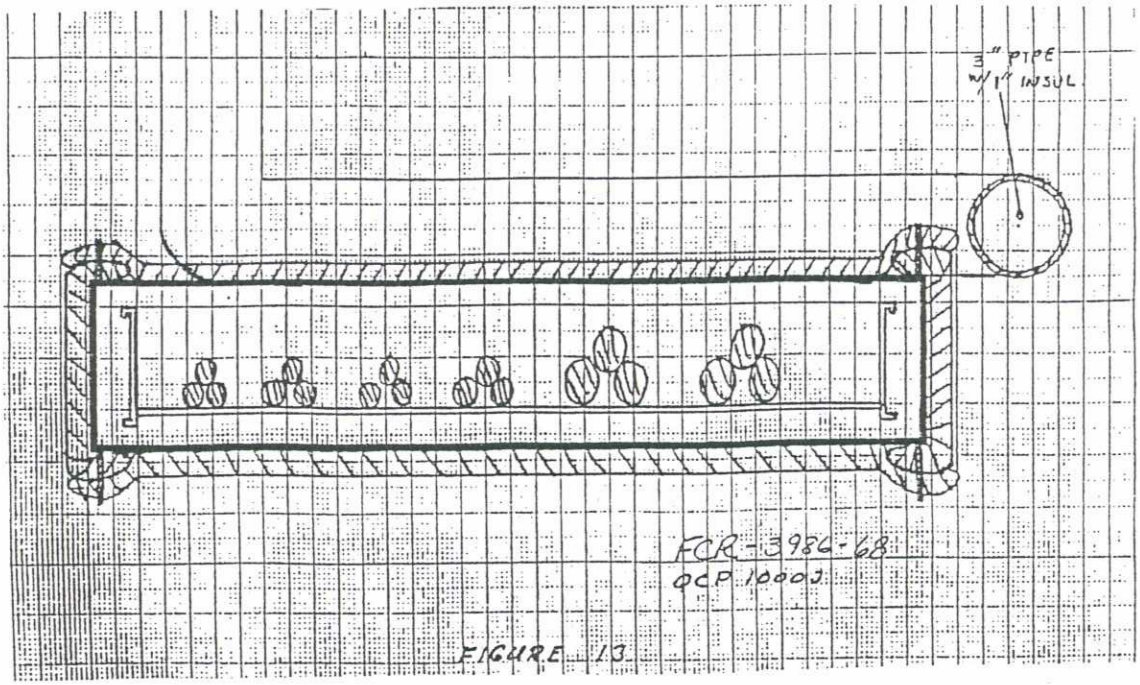

FCR-3986-68
QCP 10003

FIGURE 13

ISSUE DESIGNATION IN THIS COL INDICATES CURRENT CHANGE

FABRICATION INSPECTION OF THREE HOUR PROTECTIVE WRAP COMPONENTS

1.0 PURPOSE

1.1 To establish inspection methods and acceptance criteria to assure three hour protective wrap systems are fabricated in accordance with established fabrication procedures.

2.0 SCOPE

2.1 Provide methods for the inspection of protective wrap components during fabrication to verify correct materials are utilized.

2.2 Provide methods for the inspection of protective wrap componets during fabrication to verify conformance to fabrication procedures.

2.3 Provide methods for the final inspection of completed protective wrap components to verify conformance to design requirements.

2.4 Establish requirements for recording inspection activities to provide documentary evidence of proper fabrication.

3.0 REFERENCES

3.1 Procedure No. IP-002, Fabrication Procedure for Three Hour Fire Protective components.

4.0 DEFINITIONS

4.1 Approved Materials -- Materials qualified for use as protective wrap components and issued for fabrication under controlled conditions.

4.2 Hold Point -- Critical steps in the fabrication process that require Quality Control inspection and acceptance prior to proceeding.

4.3 Check Point -- Random sample inspection of fabrication process performed at the descretion of Quality Control. Notification is not required.

4.4 Hot Side -- Outer surface of wrap design.

4.5 Cold Side -- Inner surface of wrap design.

4.6 In-Process Inspection -- Hold Point I and II.

4.7 Final Inspection -- Hold Point III.

ISSUE DESIGNATION IN THIS COL INDICATES CURRENT CHANGE

5.0 RESPONSIBILITIES

5.1 The Quality Assurance Manager or Designee shall be responsible for the development and proper implementation of this procedure.

5.2 The assigned Quality Control Inspector shall be responsible for performing activities established in this procedure.

6.0 PROCEDURE

6.1 Inspection instruments required to perform the activities described in this procedure include a measuring tape. Calibrated instruments are not required.

6.2 Inspection activities (Hold Point I, Hold Point II, Hold Point III) required by this procedure shall be documented on Form QC-61 (Fabrication Inspection Register).

6.3 Approved material traceability identification shall be documented on Form QC-60 (Traceability ID Register).

6.4 Non-conforming conditions identified in paragraph 6.8 shall be documented on Form QC-16 (Nonconformance Report) and dispositioned in accordance with QCP-0018.

6.5 Inspection activities described herein are mandatory hold points. Release for work to proceed shall be given by the assigned Quality Control Inspector upon satisfactory completion of all inspection activities required for each hold point.

6.6 Check point inspections may be performed at any time at the discreation of Quality Control. Such inspections are not mandatory and need not be documented unless discrepancies are identified.

6.7 Discrepancies identified during in process inspection that can be corrected within a (24) twenty four hour period in accorance with Procedure No. IP-002 may be accomplished without generating a non conformance report.

6.8 Non conformance reports shall be generated when any of the following conditions exist.

6.8.1 Discrepancies identified during in-process inspection are not corrected in accordance with IP-002 within (24) twenty four hours.

6.8.2 Discrepancies identified during final inspection where dispositioning party plans to recommend use-as-is, repair or reject dispositions (as defined in QCP-0018).

ISSUE DESIGNATION IN THIS CO INDICATES CURRENT CHANGE

6.8.3 Any failure to notify Quality Control for hold point inspection prior to proceeding or proceeding prior to acceptance by Quality Control of each inspection attribute required, including satisfactory completion of any discrepancies identified.

6.9 A fabrication order shall be initated and complete, for the exception of the final release signatures at the bottom of Form QC-59, prior to any fabrication.

6.10 Copies of Fabrication Procedure No. IP-002 shall be issued in conjunction with this procedure to each assigned Quality Control Inspector for use and reference.

6.11 Hold Point One -- Material inspection

6.11.1 Only approved materials as listed in IP-002 shall be utilized in the fabrication of three hour fire protective components.

6.11.2 Document individual blanket material traceability on Form QC-60. Document Hold Point I on Form QC-61 after completion of Form QC-60.

6.12 Hold Point Two -- Inspection of inner blanket.

6.12.1 Inspect alumina silicia fiber blanket for proper dimensions in accordance with fabrication order. Verify 6" min. shiplap with 1/2" ± 1/4" deep trim in ceramic fiber blanket.

6.12.2 Inspect fiberglass cloth for proper dimensions in accordance with fabrication order. Verify 3/8" min. tuck allowed for securing hog rings. Verify hog rings are spaced 1" max apart around edges of fiberglass cloth on hot side of envelope.

6.13 Hold Point Two -- Inspection of outer blanket.

6.13.1 The outer blanket consists of two sub-assemblies, enveloped into a silica dioxide cloth. The sub-assemblies consist of, powder envelope (honeycomb and/or straight tubes) and the alumina/silica fiber blanket.

6.13.2 Inspect honeycomb tube powder envelope coated fiberglass cloth for stitching spaced 7/8"± 1/8" apart before powder fill. Verify two sides are stitched 1/2" min. from edge of cloth. Verify two adjacent sides are folded across grain of tube 1"± 1/4" and double stitched. Verify 100% fill of powder in tubes. Verify overall dimensions are in accordance with fabrication order 3/4".

ISSUE DESIGNATION IN THIS CO INDICATES CURRENT CHANGE

6.13.3 Inspect straight tube powder envelope coated fiberglass cloth for stitching spaced 1 5/8"±1/8" apart before powder fill. Verify two sides are stitch 1/2" min. from edge of cloth. Verify adjacent two sides are folded across grain of tubes 1"± 1/4" and double stitched. Verify 100% fill of powder in tubes. Verify overall dimensions are in accordance with fabrication order 3/4".

6.13.4 Inspect alumina/silica fiber blanket for proper dimensions in accordance with fabrication order. Inspect siltemp for proper dimensions in accordance with fabrication order. Verify siltemp envelope and sub-assemblies (powder envelope and alumina/silica fiber blanket) are placed in proper order and are arranged to allow for min. 6" ship lap design in accordance with fabrication order. Verify siltemp has 3/8" min. tuck for securing hog rings. Verify hog rings are spaced 1" min. around edges of siltemp on cold side of envelope. Type Q-24 telfon coated nylon thread may be used in lieu of hog rings on outer blanket. Verify lacing hooks are placed on hot side 1 1/2" ± 1/4" from edge of all upper shiplap edges and are spaced on maximum of 6" centers. Verify lacing hooks are placed on hot side 7 1/2"± 1/4" from edge of all inner ship lap edges and spaced on 6" centers.

6.13.5 Verify that inner and outer blankets are marked with appropriate blanket identification numbers from applicable fabrication order. These markings shall be in min. 3/4" lettering. Marking shall be made with waterproof paint and/or ink which will retain the marking, withstand weather deterioration other handling effects and shall not be deleterious to the fabrics. These markings shall be in close proximity of the edges of any (2) two adjacent sides on the hot side of blanket.

6.13.6 A maximum of two pieces of cermic fiber blanket utilized in one envelope are acceptable only with the use of ship lap design and darting with approved thread to avoid seperation.

6.13.7 A maximum of two pieces of siltemp utilized in one side of envelope are acceptable only with the use of splicing by double stitching. Verify first stitch is 1/2"± 1/4" from edges of siltemp and second stitch is 1/2" ±1/4" from first stitch.

6.14 Hold Point III - Final Inspection

6.14.1 Inspect completed three hour fire protective blankets for damage, proper dimensions and markings in accordance with fabrication order.

6.14.2 Verify Q.C. Forms 59, 60 and 61 are accurately completed.

ISSUE DESIGNATION IN THIS COL INDICATES CURRENT CHANGE

7.0 ATTACHMENTS

7.1 Instructions for completion of tractability ID Register. (Form QC-60)

7.2 Form QC-60

7.3 Instruction for completion of Fabrication Inspection Register (Form QC-61)

7.4 Form QC-61

7.5 Instructions for completion of Fabrication Order (Form QC-59).

7.6 Form QC-59

ATTACHMENT 7.1
INSTRUCTIONS FOR COMPLETION OF TRACEABILITY ID REGISTER
FORM QC-60

Report Number	This is a two part number utilizing the numberical portion of the project number and the numerical sequence of the individual report sheet initiated in this project. (i.e. 027/011. This defines the eleventh QC-60 used on project number PMT-027).
Project Name	Name of the project or plant.
Project Number	The PROMATEC job number (i.e. PMT-027)
Fabricaator	Name of company fabricating.
MT Barrier Wrap Identification Number	Identification number assigned on fabrication order (form QC-119)
MFG	Name of appropriate material manufacturer.
Type	Name of appropriate material type/description
I.D. No.	Manufacturers ID/lot number (if applicable).
R.R.#	Promatecs' assigned receiving report number
Inspector By/date	Inspectors initials and date of inspection.

PROMATEC

PROGRESSIVE MATERIALS AND TECHNOLOGIES, INC.

REPORT NUMBER _____

PROJECT NAME _____

PROJECT NUMBER _____

TRACEABILITY ID REGISTER.

FABRICATOR _____

MT BARRIER WRAP	EXTERNAL FABRIC		INTERNAL FABRIC		FILLER MATERIAL		FILLER MATERIAL		THREAD		HARDWARE		INSPECTOR
MFG *	*		*		*		*		*		*	*	
TYPE *	*		*		*		*		*		*	*	
IDENTIFICATION NO:	ID NO.	R.R.#	ID NO.	R.R.#	ID NO.	R.R.#	ID NO.	R.R.#	ID NO.	R.R.#	R.R.#	R.R.#	BY / DATE

ATTACHMENT 7.3
INSTRUCTION FOR COMPLETION OF FABRICATION INSPECTION REGISTER
FORM QC-61

Report Number	This is a two part number utilizing the numberical portion of the project number and the numerical sequence of the individual report sheet initiated on this project (i.e. 027/011. This defines the eleventh QC-61 used on project number PMT-027.)
Project Name	Name of project or plant.
Project Number	The Promatec job number (i.e. PMT-027).
Fabricator	Name of company fabricating blanket.
MT Barrier Wrap Identification Number	Identification number assigned on fabrication order (form QC-119).
QC-60 Number	Report number of the QC-60, Traceability ID Register for reference to traceability.
Hold Point One	
Reject/Accept	Place check mark in appropriate column.
By	Inspectors initials.
Date	Date of inspection.
Hold Point Two	
Reject/Accept	Place check mark in appropriate column.
By	Inspectors initials.
Date	Date of inspection.
Hold Point Three	
Reject/Accept	Place check mark in appropriate column.
By	Inspectors initials.
Date	Date of inspection.

PROMATEC
PROGRESSIVE MATERIALS AND TECHNOLOGIES, INC.

REPORT NUMBER _____

PROJECT NAME _____

PROJECT NUMBER _____

FABRICATION INSPECTION REGISTER

FABRICATOR _____

MT BARRIER WRAP	FORM	HOLD POINT ONE				HOLD POINT TWO				HOLD POINT THREE			
COMPONENT / BLANKET	QC-60	MATERIAL INSPECTION				FABRICATION INSPECTION				FINAL INSPECTION			
IDENTIFICATION NUMBER	NUMBER	REJECT	ACCEPT	BY	DATE	REJECT	ACCEPT	BY	DATE	REJECT	ACCEPT	BY	DATE

PFO	Promatec fabriction order. Assigned by Corporate Q.A. document control. Prefix with numberic portion of job number. Second portion is numerical sequence on that job. (027/011 represents the eleventh PFO on job #027).
ENG. PORTION	To be completed by Promatec Field Engineers.
PROJECT NAME	Project name.
CUSTOMER	Client
CUSTOMER ORDER NO.	Client order number
JOB NO.	Promatec assigned job number
TYPE	Name of fire protective wrap
QUANTITY	Number of pieces
LENGTH	Dimension in inches
WIDTH	Dimension in inches
THICKNESS	Dimension in inches
TOTAL FT 2	Dimenision in feet
SCHEMATIC DRAWING REF.	
SCHEMATIC NO.	
ID NO.	Individual wrap I.D. No. Ordered by Corporate QA Document Control.
ORDERED BY	Eng. signature
DATE	Date ordered
SKETCH	Eng. to sketch wrap and assign dimension.
CERTIFICTE OF CONFORMANCE	To be completed by Fabricator.
PROMATEC QUALITY ASSURANCE ACCEPTANCE	Promatec Quality Control signature.

PROMATEC

ATTACHMENT 7.6

FABRICATION ORDER

PFO-

PROJECT NAME	CUSTOMER	CUSTOMER ORDER NO.	JOB NO.

TYPE _____ QUANTITY _____

LENGTH _____ WIDTH _____ THICKNESS _____ TOTAL FT² _____

SCHEMATIC DRAWING REF. _____ SCHEMATIC NO. _____

I.D. NO. _____

ORDERED BY _____ DATE _____

SKETCH

CERTIFICATE OF CONFORMANCE

We hereby certify that all items furnished were fabricated with materials provided by PROMATEC and conform to the requirements of Purchase Order No. _____.

Signature _____ Company _____ Date _____

PROMATEC QUALITY ASSURANCE ACCEPTANCE

Signature _____ Title _____ Date _____

ISSUE DESIGNATION IN THIS COLUMN INDICATES CURRENT CHANGE

INSTALLATION INSPECTION OF THREE HOUR PROTECTIVE FIRE WRAP SYSTEMS

1.0 PURPOSE

To establish inspection methods and acceptance criteria to assure three hour protective wrap systems are installed in accordance with established installation procedures.

2.1 SCOPE

2.1 To provide methods for the inspection of protective wrap components during installation to verify correct materials are issued.

2.2 To provide methods for in-process and final inspection of protective wrap systems to verify conformance to design requirements.

2.3 To establish requirements for recording inspection activities to provide documentary evidence proper installation.

3.0 REFERENCES

3.1 Procedure No. IP-001, Installation of Three Hour Fire Protective Wrap Systems

3.2 Typical Design Detail B-495 and B-496

3.3 Procedure No. QCP-0042, Fabrication Inspection of Three Hour Protective Wrap Components

4.0 DEFINITIONS

4.1 **APPROVED MATERIALS** - Materials qualified for use as protective wrap system components and issued for installation under controlled conditions.

4.2 **HOLD POINT** - Criteria steps in the installation process that require Quality Control inspection and acceptance prior to proceeding.

4.3 **CHECK POINT** - Random sample inspection of installation processes performed at the discretion of Quality Control. Notification is not required.

5.0 RESPONSIBILITIES

5.1 The Quality Assurance Manager or Designee shall be responsible for the development and proper implementation of this procedure.

5.2 The assigned Quality Control Inspector shall be responsible for performing activities established in this procedure.

5.3 The Construction Manager or Designee shall be responsible for assuring that craft personnel notify Quality Control for inspections as referenced in IP-001.

ISSUE DESIGNATION IN THIS COLU NDICATES CURRENT CHANGE

6.0 PROCEDURE

6.1 Inspection instruments required to perform the activities described in this procedure include a six (6") inch scale and a measuring tape. Calibrated instruments are not required.

D 6.2 Inspection activities required by this procedure shall be documented on Form No. QC-117 (Three Hour Fire Protective Wrap Inspection Report) or an approved QC checklist. Nonconforming conditions identified in accordance with paragraph 6.5 shall be documented on Form QC-16 (Nonconformance Report) and dispositioned in accordance with Procedure No. QCP-0018.

D 6.3 Inspection activities described herein are mandatory hold points. Release for work to proceed shall be given by the assigned Quality Control Inspector upon satisfactory completion of all inspection activities required for each hold point and sign-off of Form QC-117 or approved QC checklist.

6.4 Random sample check points may be performed at anytime at the discretion of Quality Control. Such inspections are not mandatory and need not be documented unless discrepancies are identified.

6.5 Minor deviations identified during in-process inspection may be corrected without the issuance of Nonconformance Reports provided corrective action is taken immediately and documented on Form QC- 117 or an approved QC checklist. Minor deviations that cannot be corrected immediately shall be documented on Form QC-121 and processed in accordance with Procedure No. QCP-0018.

6.6 Nonconforming conditions that could adversely affect product integrity shall be documented on Form No. QC-16 and processed in accordance with Procedure No. QCP-0018.

6.7 Copies of Installation Procedure No. IP-001 shall be issued in conjunction with this procedure to each assigned Quality Control Inspector for field use and reference.

6.8 Conduit, Cable Drop and Junction Box Wrap Inspection.

6.8.1 Hold Point One - Inner Blanket Inspection

6.8.1.1 For cable drops, verify that cables are bundled tightly with duct tape, cable tie wrap or other suitable means.

D 6.8.1.2 Upon completion of installation, verify that serial number for each blanket is clearly visible and record on Form QC-117 or approved QC checklist.

6.8.1.3 Visually examine each blanket for damage. Holes and tears exceeding one (1") inch shall be repaired in accordance with IP-001 and re-inspected per section 6.13 of this procedure.

6.8.1.4 Inspect shiplap joints on each blanket for tightness and verify that gaps, if any, do not exceed one-half (1/2") inch, including blanket to blanket joints.

ISSUE DESIGNATION IN THIS COLL NDICATES CURRENT CHANGE

D

6.8.1.5 Inspect duct tape and verify application at full circumference around each blanket with tape to tape adhesion

6.8.2 Hold Point Two - Foil Barrier Inspection

6.8.2.1 Upon completion of installation visually examine each foil barrier strip for damage. Cuts, tears and holes shall be repaired with additional strips of foil exceeding one (1") inch and re-inspected prior to installation of outer blankets.

6.8.2.2 Inspect each foil barrier strip for lengthwise application and verify a minimum six (6") inch overlap on ends and edges (two (2") inches for sharp curvatures).

6.8.2.3 Inspect tape for sufficient spacing to assure no excessive gaps exist in overlaps with particular emphasis on conduit curvatures.

6.8.3 Hold Point Three - Outer Blanket Inspection

6.8.3.1 Upon completion of installation, verify that serial number for each blanket is clearly visible and record on Form QC-117 or approved QC checklist.

6.8.3.2 Visually examine each blanket for damage. Holes and tears exceeding one (1") inch shall be repaired in accordance with IP-001 and re-inspected per section 6.13 of this procedure.

6.8.3.3 Inspect shiplap joints for tightness and proper alignment. Verify that gaps, if any, do not exceed one-half (1/2") inch. Inspect each lacing hook and verify 16 gauge stainelss steel tie wire is securely fastened between each adjacent hook.

6.8.4 Hold Point Four - Final Inspection

6.8.4.1 Perform final examination of completed system to assure correct installation in accordance with this section.

6.8.4.2 Verify that correct raceway identification tags are affixed at all entrance and exit points (walls, floors) and at origin and destination points on runs five (5') feet and longer or at the most visible location on runs less than five (5') feet.

6.9 Three sided wrap installation inspection

6.9.1 Hold Point One - Concrete Anchor Inspection

6.9.1.1 Upon completion of installation inspect anchors for compliance to site requirements.

6.9.1.2 Measure anchor spacing for maximum twelve (12") inch centers and verify that each anchor is pre-set.

6.9.2 Hold Point Two - Inner Blanket Inspection

ISSUE DESIGNATION IN THIS COLL INDICATES CURRENT CHANGE

6.9.2.1 Upon completion of installation inspect each blanket in accordance with subsection 6.8.1 of this procedure. Additionally:

6.9.2.2 Inspect each blanket and verify proper alignment following impalement through studs.

6.9.2.3 Measure from blanket edges of each inner blanket to center of corresponding studs and verify minimum two (2") extension.

6.9.3 Hold Point Three - Foil Barrier Inspection

6.9.3.1 Upon completion of installation inspect each foil barrier strip in accordance with subsection 6.8.2. Additionally:

6.9.3.2 Inspect each foil barrier strip and verify proper alignment following impalement through studs.

6.9.3.3 Measure from edges of foil barrier to center of studs on each barrier strip and verify minimum two (2") extension.

6.9.4 Hold Point Four - Outer Blanket Inspection

6.9.4.1 Upon completion of installation inspect each blanket in accordance with subsection 6.8.3 . Additionally:

6.9.4.2 Inspect blanket and verify proper alignment following impalement through studs.

6.9.4.3 Inspect anchor assembly and verify that fender washers and/or B72 studs and/or flat bars are in place and that locknuts (or double nuts) are securely tightened.

6.9.4.4 Visually examine blanket assembly for wrinkles and bunches, and verify that assembly is not depressed over three-fourth (3/4") inch at anchors.

6.9.5 Hold Point Five - Final Inspection

6.9.5.1 Perform final examination of completed system to assure correct installation in accordance with this section.

6.9.5.2 Verify that correct raceway identification tags are affixed at all entrance and exit points (walls, floors) and at origin and destination points on runs five (5') feet and longer or at the most visible location on runs less than five (5') feet.

6.10 Field Modification Inspection - Non-Electrical Interferences

6.10.1 Hold Point One - Fabrication Inspection

D

6.10.1.1 Upon issuance of alumina silica blankets and outer fabric for fabrication record lot number(s) and receiving report number(s) on Form No. QC-117 or approved QC checklist.

ISSUE DESIGNATION IN THIS COLL NDICATES CURRENT CHANGE

6.10.2 Hold Point Two - Installation Inspection

6.10.2.1 Upon completion of fabrication and installation, verify correct thickness based alumina silica blanket size issued (actual measurement is not required due to blanket compression factor). Measure for minimum distance of eighteen (18") inches from point of interference or full length if interference is less than eighteen (18") inches.

6.10.2.2 Inspect lacing hooks and tie wire fasteners for sufficient spacing and tightness (six (6") inch minimum spacing is not required for interferences).

6.10.2.3 Inspect blanket joint and seam, and verify that no apparent gaps exist.

6.11 Cable Tray Interference Installation Inspection

6.11.1 Hold Point - Cable Inspection

D 6.11.1.1 Upon issuance of alumina silica blankets, record lot number and receiving report number on Form QC-117 or approved QC checklist.

6.11.1.2 Upon completion of installation inspect alumina silica blanket and verify that distance from each side of protected conduit is a minimum of eighteen (18") inches.

6.11.2 Cable Tray Interference Wrap Inspection

6.11.2.1 Installation inspection of cable tray wrap systems shall be in accordance with section 6.8 of this procedure and design details as established by Engineering.

6.12 Inspection of Field Fabrication Components

6.12.1 Primary wrap components fabricated in the field shall be inspected and documented in accordance with QCP-0042 prior to installation.

D 6.12.2 Field fabrication of items used for modification of existing wrap components shall be inspected in accordance with the applicable sections of QCP-0042. Inspection results and material traceability shall be recorded on Form QC-117 (or approved QC checklist) in lieu of Form QC-60 and QC-61.

6.13 Field Repair Inspection

D 6.13.1 Record lot numbers and receiving report numbers for materials issued for use on Form No. QC-117 or approved QC checklist.

6.13.2 Upon completion of installation inspect for tightness and verify that patch overlaps a minimum of two (2") inches on undamaged fabric, and that patches have finished edges.

6.13.3 Inspect Q-24 thread stitching on patches and tears two (2") inches and under and verify minimum spacing of one-half (1/2") inch.

6.14 When the alternate method for installing outer blanket assemblies is utilized as described in subsection 6.6 of IP-001, the following Inspection Hold Point shall apply in lieu of subsection 6.8.3 and 6.8.4.

6.14.1 Hold Point Three - Tube Assembly Inspection

D 6.14.1.1 Upon completion of tube assembly installation, verify that serial numbers are clearly visible and record on Form QC-117 or approved QC checklist.

6.14.1.2 Visually examine each component for damage and verify that tubes are parallel with system run. Holes and tears shall be patches with aluminum or duct tape to prevent powder leakage. If holes and tears result in excessive powder loss, the affected component shall be replaced.

6.14.1.3 Inspect circumferential and longitudinal joints and verify abutting fit with no apparent gaps. Inspect duct tape for sufficient spacing and tape to tape adhesion.

6.14.2 Hold Point Four - Alumina Silica Blanket Inspection

D 6.14.2.1 Upon completion of installation of each alumina silica blanket, verify that serial number is clearly visible and record on Form QC-117 or an approved QC checklist.

6.14.2.2 Visually examine each blanket for damage. Holes or tears in fabric exceeding one (1") inch shall be repaired per IP-001 and inspected per section 6.13 of this procedure.

6.14.2.3 Verify that circumferential and longitudinal joints are staggered a minimum six (6") inches from tube assembly joints.

6.14.2.4 Inspect longitudinal and circumferential joints for tightness with no apparent gaps. Verify that 16 gauge stainless steel tie wire is securely fastened between adjacent lacing hooks.

6.14.3 Hold Point Five - Final Inspection

6.14.3.1 Upon completion of total system installation perform final visual inspection of system to assure compliance with all applicable requirements.

6.14.3.2 Verify that correct raceway identification tags are affixed in accordance with paragraph 6.8.4.2.

7.0 ATTACHMENTS

7.1 Form No. QC-117, Three Hour Protective Wrap Inspection Report

7.2 Form No. QC-122, Three Hour MT Barrier Installation Inspection Report Register

ISSUE DESIGNATION IN THIS COLL INDICATES CURRENT CHANGE

F. MATEC

INSTALLATION INSPECTI(.EPORT
THREE HOUR MT BARRIER

Page 1 of ____

Report .: /

Project Name:	Job No.:	Raceway I.D. No.:	Schematic No.:	System Description:	Area:	Elevation:

Component Identification Number	Type	Hold Point No.	Tags/ Marking		Visual		Shiplap/ Overlap		Seam/ Joint		Duct Tape		Stagger		Lacing Hooks		Tie Wire		Anchors		Bolting		Cable-Blanket Bundle		Length/ Thick-ness		Repair/ Modif.		Insp. Initial	Insp. Date
			A	U	A	U	A	U	A	U	A	U	A	U	A	U	A	U	A	U	A	U	A	U	A	U	A	U		

SUPPLEMENTAL MATERIALS TRACEABILITY

TYPE	LOT NO.	APPLICATION	TYPE	LOT NO.	APPLICATION

REMARKS:

Final Acceptance:	Date:	Client Acceptance:	Date:

FORM QC-117

QCP-0041 ATTACHMENT 7.1

3 HR MT BARRIER
INSTALLATION INSPECTION REPORT REGISTER

PROJECT NAME: _____

PROJECT NO.: _____

REPORT NUMBER	RACEWAY I.D. NO.	SCHEMATIC NUMBER	SYSTEM DESCRIPTION	RELEASE DATE	ACCEPTANCE DATE	COMMENTS

FORM QC-122 REV. 1-07/20/95

PROMATEC

FABRICATION ORDER

PFO-

PROJECT NAME	CUSTOMER	CUSTOMER ORDER NO.	PFO NO.

TYPE _____ QUANTITY _____

LENGTH _____ WIDTH _____ THICKNESS _____ TOTAL FT² _____

SCHEMATIC DRAWING REF. _____ SCHEMATIC NO. _____

I.D. NO. _____

ORDERED BY _____ DATE _____

SKETCH

CERTIFICATE OF CONFORMANCE

We hereby certify that all items furnished were fabricated with materials provided by PROMATEC and conform to the requirements of Purchase Order No. _____.

Signature _____ Company _____ Date _____

PROMATEC QUALITY ASSURANCE ACCEPTANCE

Signature _____ Title _____ Date _____

(QC 002)

PROJECT NAME _____ REPORT NUMBER ____, _____

PROJECT NUMBER _____

FABRICATOR _____

FABRICATOR ADDRESS _____

TRACEABILITY ID REGISTER

CABLE WRAP FABRICATION

FORM QC-60

03/01/83

REV. 1 - 11/20/84

REV. 2 - 03/04/85

BLANKET NUMBER/ FAB ORDER NUMBER	EXTERNAL FABRIC MFG: _____ TYPE: _____ MFG ID NO:	INTERNAL FABRIC MFG: _____ TYPE: _____ MFG ID NO:	FILLER MATERIAL MFG: _____ TYPE: _____ MFG ID NO:	THREAD 1 MFG: _____ TYPE: _____ MFG ID NO:	COMMENTS	DATE	BY

Appendix F

QA DOCUMENTATION FOR HEMYC INSTALLATION

Q/A RECEIVING REPORT

CLIENT/PROJECT NAME Sandia Natl Labs
LIENT/PROJECT NUMBER 14790-123263,264&265
RECEIVED FROM Promatec
PROJECT LOCATION Omega Point Labs

REPORT NUMBER 2701 - 14790
DATE RECEIVED 3-20-05
DATE INSPECTED 3-20-05
INSPECTED BY: [signature]

ITEM DESCRIPTION	P.O . NO.	QUANTITY Order	Rec'd	B.O.	I.D. NO.	CON'tD MATL Y/N	CERT REC'D Y/N	SAFETY RELATED Y/N	CONTAINER INTEGRITY	ACCEPTANCE Accept	Hold	Reject	REMARKS
Hemyc	NA	0	Various	0	See	Y	Y	N	Good	X			Receiving Only
Test #2					attached								
					Sheets								

Page 327

09-016-11/02

PCI PERFORMANCE CONTRACTING INC PROMATEC	**FABRICATION ORDER**	PFO - 051179

PROJECT NAME	CUSTOMER	CUSTOMER ORDER NO.	JOB NO.
HEMYC TEST #2	SANDIA LAB	401177 Rev. 1	1039

TYPE ONE HOUR QUANTITY

LENGTH SEE DRAWING WIDTH SEE DRAWING THICKNESS 2" TOTAL FT ² _____

SCHEMATIC DRAWING REF. SEE BELOW SCHEMATIC NO. N/A

I.D. NO. 12" TRAY 2A DIRECT WRAP

ORDERED BY MICHAEL JORDAN DATE 3/7/05

SKETCH

SEE ATTACHED SEGMENT DRAWINGS

2A-CIR1
2A-CIR2
2A-CIR3

CERTIFICATE OF CONFORMANCE

We hereby certify that all items furnished were fabricated with materials provided by PCI-Promatec and conform to the requirements of Purchase Order No. 051179.

Signature _____ Company M.I.T. Int'l Date 3/29/05

PCI-PROMATEC QUALITY ASSURANCE ACCEPTANCE

Signature _____ Title FSM Date 3-29-05

Form QC-59
Rev. 2 – 02/18/05

PCI PERFORMANCE CONTRACTING INC PROMATEC	**FABRICATION ORDER**	PFO - 051179

PROJECT NAME	CUSTOMER	CUSTOMER ORDER NO.	JOB NO.
HEMYC TEST #2	SANDIA LAB	401177 Rev. 1	1039

TYPE ONE HOUR QUANTITY

LENGTH SEE DRAWING WIDTH SEE DRAWING THICKNESS 1 1/2" TOTAL FT ² _____

SCHEMATIC DRAWING REF. SEE BELOW SCHEMATIC NO. N/A

I.D. NO. 12" TRAY 2B W/STAND OFF

ORDERED BY MICHAEL JORDAN DATE 3/7/05

SKETCH

SEE ATTACHED SEGMENT DRAWINGS

2B-RS1
2B-RS2
2B-RS3
2B-LS1
2B-LS2
2B-LS3
2B-B1
2B-B2
2B-B3
2B-T1
2B-T2
2B-T3

CERTIFICATE OF CONFORMANCE

We hereby certify that all items furnished were fabricated with materials provided by PCI-Promatec and conform to the requirements of Purchase Order No. 051179.

Signature _____ Company M.I.T Int'l Date 3/29/05

PCI-PROMATEC QUALITY ASSURANCE ACCEPTANCE

Signature _____ Title FSR Date 3-29-05

Form QC-59
Rev. 2 – 02/18/05

PCI PERFORMANCE CONTRACTING INC PROMATEC	FABRICATION ORDER	PFO - 051179

PROJECT NAME	CUSTOMER	CUSTOMER ORDER NO.	JOB NO.
HEMYC TEST #2	SANDIA LAB	401177 Rev. 1	1039

TYPE ONE HOUR QUANTITY

LENGTH SEE DRAWING WIDTH SEE DRAWING THICKNESS 2" TOTAL FT ²

SCHEMATIC DRAWING REF. SEE BELOW SCHEMATIC NO. N/A

I.D. NO. 36" TRAY 2C DIRECT WRAP

ORDERED BY MICHAEL JORDAN DATE 3/7/05

SKETCH

SEE ATTACHED SEGMENT DRAWINGS

2C-RS1
2C-RS2
2C-RS3
2C-LS1
2C-LS2
2C-LS3
2C-B1
2C-B2
2C-B3
2C-T1
2C-T2
2C-T3

CERTIFICATE OF CONFORMANCE

We hereby certify that all items furnished were fabricated with materials provided by PCI-Promatec and conform to the requirements of Purchase Order No. 051179.

Signature [signature] Company M.I.T. Int'l Date 3/29/05

PCI-PROMATEC QUALITY ASSURANCE ACCEPTANCE

Signature [signature] Title FSM Date 3-29-05

Form QC-59
Rev. 2 – 02/18/05

PCI PERFORMANCE CONTRACTING INC PROMATEC

FABRICATION ORDER

PFO - 051179

PROJECT NAME	CUSTOMER	CUSTOMER ORDER NO.	JOB NO.
HEMYC TEST #2	SANDIA LAB	401177 Rev. 1	1039

TYPE ONE HOUR QUANTITY

LENGTH SEE DRAWING WIDTH SEE DRAWING THICKNESS 1 1/2" TOTAL FT ²

SCHEMATIC DRAWING REF. SEE BELOW SCHEMATIC NO. N/A

I.D. NO. 36" TRAY 2D W/STAND OFF

ORDERED BY MICHAEL JORDAN DATE 3/7/05

SKETCH

SEE ATTACHED SEGMENT DRAWINGS

2D-RS1
2D-RS2
2D-RS3
2D-LS1
2D-LS2
2D-LS3
2D-B1
2D-B2
2D-B3
2D-T1
2D-T2
2D-T3

CERTIFICATE OF CONFORMANCE

We hereby certify that all items furnished were fabricated with materials provided by PCI-Promatec and conform to the requirements of Purchase Order No. 051179.

Signature _____ Company M.I.T. Intl Date 3/29/05

PCI-PROMATEC QUALITY ASSURANCE ACCEPTANCE

Signature _____ Title FSM Date 3-29-05

Form QC-59
Rev. 2 – 02/18/05

PCI PERFORMANCE CONTRACTING INC PROMATEC

FABRICATION ORDER

PFO - 051179

PROJECT NAME	CUSTOMER	CUSTOMER ORDER NO.	JOB NO.
HEMYC TEST #2	SANDIA LAB	401177 Rev. 1	1039

TYPE ONE HOUR QUANTITY

LENGTH SEE DRAWING WIDTH SEE DRAWING THICKNESS 2" TOTAL FT ²

SCHEMATIC DRAWING REF. SEE BELOW SCHEMATIC NO. N/A

I.D. NO. CABLE DROP 2E DIRECT WRAP

ORDERED BY MICHAEL JORDAN DATE 3/8/05

SKETCH

SEE ATTACHED SEGMENT DRAWINGS

2E-1
2E-2A
2E-2B
2E-C1
2E-C2

CERTIFICATE OF CONFORMANCE

We hereby certify that all items furnished were fabricated with materials provided by PCI-Promatec and conform to the requirements of Purchase Order No. 051179.

Signature [signature] Company M.I.T. Int'l Date 3/29/05

PCI-PROMATEC QUALITY ASSURANCE ACCEPTANCE

Signature [signature] Title FSR Date 3-29-05

Form QC-59
Rev. 2 – 02/18/05

PCI PERFORMANCE CONTRACTING INC PROMATEC	**FABRICATION ORDER**	PFO - 051179

PROJECT NAME	CUSTOMER	CUSTOMER ORDER NO.	JOB NO.
HEMYC TEST #2	SANDIA LAB	401177 Rev. 1	1039

TYPE ONE HOUR QUANTITY

LENGTH SEE DRAWING WIDTH SEE DRAWING THICKNESS 1 1/2" TOTAL FT ²

SCHEMATIC DRAWING REF. SEE BELOW SCHEMATIC NO. N/A

I.D. NO. CABLE DROP 2F W/STAND OFF

ORDERED BY MICHAEL JORDAN DATE 3/8/05

SKETCH

SEE ATTACHED SEGMENT DRAWINGS

2F-1
2F-2

CERTIFICATE OF CONFORMANCE

We hereby certify that all items furnished were fabricated with materials provided by PCI-Promatec and conform to the requirements of Purchase Order No. 051179.

Signature _____ Company M.I.T. Int'l Date 3/29/05

PCI-PROMATEC QUALITY ASSURANCE ACCEPTANCE

Signature _____ Title FSM Date 3-29-05

Form QC-59
Rev. 2 – 02/18/05

PCI PERFORMANCE CONTRACTING INC PROMATEC	**FABRICATION ORDER**	PFO - 051179

PROJECT NAME	CUSTOMER	CUSTOMER ORDER NO.	JOB NO.
HEMYC TEST #2	SANDIA LAB	401177 Rev. 1	1039

TYPE ONE HOUR QUANTITY

LENGTH SEE DRAWING WIDTH SEE DRAWING THICKNESS 2" TOTAL FT ² _____

SCHEMATIC DRAWING REF. SEE BELOW SCHEMATIC NO. N/A

I.D. NO. JUNCTION BOX 2G

ORDERED BY MICHAEL JORDAN DATE 3/8/05

SKETCH

SEE ATTACHED SEGMENT DRAWINGS

2G-1
2G-2

CERTIFICATE OF CONFORMANCE

We hereby certify that all items furnished were fabricated with materials provided by PCI-Promatec and conform to the requirements of Purchase Order No. 051179.

Signature _____ Company M.I.T. Int'l Date 3/29/05

PCI-PROMATEC QUALITY ASSURANCE ACCEPTANCE

Signature _____ Title FSM Date 3-29-05

Form QC-59
Rev. 2 – 02/18/05

PCI PERFORMANCE CONTRACTING INC PROMATEC

FABRICATION ORDER

PFO - 051179

PROJECT NAME	CUSTOMER	CUSTOMER ORDER NO.	JOB NO.
HEMYC TEST #2	SANDIA LAB	401177 Rev. 1	1039

TYPE ONE HOUR QUANTITY

LENGTH SEE DRAWING WIDTH SEE DRAWING THICKNESS 2" TOTAL FT ²

SCHEMATIC DRAWING REF. SEE BELOW SCHEMATIC NO. N/A

I.D. NO. JUNCTION BOX HANGERS 2G

ORDERED BY MICHAEL JORDAN DATE 3/8/05

SKETCH

SEE ATTACHED SEGMENT DRAWINGS

ONLY KAOWOOL ON HANGERS NO HEMYC.

CERTIFICATE OF CONFORMANCE

We hereby certify that all items furnished were fabricated with materials provided by PCI-Promatec and conform to the requirements of Purchase Order No. 051179.

Signature [signature] Company M.I.T. Int'l Date 3/29/05

PCI-PROMATEC QUALITY ASSURANCE ACCEPTANCE

Signature [signature] Title FS,E Date 3-29-05

Form QC-59
Rev. 2 – 02/18/05

PCI PERFORMANCE CONTRACTING INC PROMATEC

TRACEABILITY ID REGISTER

REPORT NUMBER 1

PROJECT NAME Saudia #2

PROJECT NUMBER 1039

FABRICATOR MIT

MT BARRIER WRAP	EXTERNAL FABRIC		INTERNAL FABRIC		FILLER MATERIAL		FILLER MATERIAL		THREAD		HARDWARE		INSPECTOR
MFG	Hitco		Hitco		Kaowool		N/A		Alpha		N/A		JT
TYPE	Refrasil-18		Refrasil		#8				R-24				
IDENTIFICATION NO.	I.D. NO.	R.R.#	I.D. NO.	R.R.#	I.D. NO.	R.R.#	I.D. NO.	R.R.#	I.D. NO.	R.R.#	R.R.#	R.R.#	BY / DATE
	4235495-	R051104	4235495-		4365A-2	R051105			35957	R051102			3/23/05
2ACIR1	29-5	↓	29-5		↓	↓			↓	↓			
2ACIR2	29-5		29-5										
2ACIR3	29-5		29-5										

PCI PERFORMANCE CONTRACTING INC PROMATEC

TRACEABILITY ID REGISTER

REPORT NUMBER 1

PROJECT NAME Saudia #1

PROJECT NUMBER 1039

FABRICATOR MIT

MT BARRIER WRAP	EXTERNAL FABRIC		INTERNAL FABRIC		FILLER MATERIAL		FILLER MATERIAL		THREAD		HARDWARE		INSPECTOR
MFG	Hitco		Hitco		Kaowool		N/A		Alpha		N/A		JT
TYPE	Refrasil-18		Refrasil		#8				R-24				
IDENTIFICATION NO.	I.D. NO.	R.R.#	I.D. NO.	R.R.#	I.D. NO.	R.R.#	I.D. NO.	R.R.#	I.D. NO.	R.R.#	R.R.#	R.R.#	BY / DATE
	4235495-	R051104	4235495-		4209A-MH	R051105			35954	R051102			3/23/05
2B-R1	29-6		29-6										
2B-R2	29-5		29-5										
2B-R3	29-6		29-6										
2B-L1	29-6		29-6										
2B-L2	29-5		29-5										
2B-L3	29-6		29-6										
2B-B1	29-4		29-4										
2B-B2	29-4		29-4										
2B-B3	29-4		29-4										
2B-T1	29-4		29-4										
2B-T2	29-4		29-4										
2B-T3	29-4		29-4										

FORM QC-60 rev. 3 (4/15/86)

PCI PERFORMANCE CONTRACTING INC PROMATEC

REPORT NUMBER 1

PROJECT NAME Sandia #2

PROJECT NUMBER 1039

TRACEABILITY ID REGISTER

FABRICATOR MIT

MT BARRIER WRAP	EXTERNAL FABRIC		INTERNAL FABRIC		FILLER MATERIAL		FILLER MATERIAL		THREAD		HARDWARE		INSPECTOR
MFG	Hitco		Hitco		Kaowool		N/A		Alpha		N/A		J.T
TYPE	Refrasil-18		Refrasil-18		#8				2-24				
IDENTIFICATION NO.	I.D. NO.	R.R.#	I.D. NO.	R.R.#	I.D. NO.	R.R.#	I.D. NO.	R.R.#	I.D. NO.	R.R.#	R.R.#	R.R.#	BY / DATE
	4235495-		423548-		4365A-2				35957	RO 51102			3/23/05
		R051104				R051105							
2C-RS1	29-6		29-6										
2C-RS2	29-6		29-6										
2C-RS3	29-6		29-6										
2C-LS1	29-6		29-6										
2C-LS2	29-6		29-6										
2C-LS3	30-3		30-3										
2C-B1	29-4		29-4										
2C-B2	29-4		29-4										
2C-B3	29-4		29-4										
2C-T1	29-2		29-2										
2C-T2	29-2		29-2										
2C-T3	29-4		29-4										

PCI PERFORMANCE CONTRACTING INC PROMATEC

TRACEABILITY ID REGISTER

REPORT NUMBER 1

PROJECT NAME Sandia #1

PROJECT NUMBER 1039

FABRICATOR MIT

MT BARRIER WRAP	EXTERNAL FABRIC		INTERNAL FABRIC		FILLER MATERIAL		FILLER MATERIAL		THREAD		HARDWARE		INSPECTOR
MFG	Hitco		Hitco		Kaowool #8		N/A		Alpha R.24		N/A		JT
TYPE	Refrasil-18		Refrasil										
IDENTIFICATION NO.	I.D. NO.	R.R.#	I.D. NO.	R.R.#	I.D. NO.	R.R.#	I.D. NO.	R.R.#	I.D. NO.	R.R.#	R.R.#	R.R.#	BY / DATE
	4235495-	R051104	4235495-		4269A-MH	R051165			35957	R051102			3/23/05
2D-RS1	29-6		29-6										
2D-RS2	29-6		29-6										
2D-RS3	29-2		29-2										
2D-LS1	29-6		29-6										
2D-LS2	29-6		29-6										
2D-LS3	29-2		29-2										
2D-B1	29-5		29-5										
2D-B2	29-5		29-5										
2D-B3	29-5		29-5										
2D-T1	29-5		29-5										
2D-T2	29-2		29-2										
2D-T3	29-2		29-2										

PCI PERFORMANCE CONTRACTING INC PROMATEC

REPORT NUMBER 1

PROJECT NAME Sandia #2

PROJECT NUMBER 1039

TRACEABILITY ID REGISTER

FABRICATOR MIT

MT BARRIER WRAP	EXTERNAL FABRIC		INTERNAL FABRIC		FILLER MATERIAL		FILLER MATERIAL		THREAD		HARDWARE		INSPECTOR
MFG	Hitco		Hitco		Kaowool		N/A		Alpha		N/A		J.T
TYPE	Refrasil-18		Refrasil-18		#8				QP-24				
IDENTIFICATION NO.	I.D. NO.	R.R.#	I.D. NO.	R.R.#	I.D. NO.	R.R.#	I.D. NO.	R.R.#	I.D. NO.	R.R.#	R.R.#	R.R.#	BY / DATE
	4235495-	R051104	4235495-	R051104	4365A-2	R051105			35957	PO 511102			3/23/05
2E-1	29-4	↓	29-4	↓	↓	↓			↓	↓			
2E-2A	29-4		29-4										
2E-2B	29-4		29-4										
2E-C1	29-4		29-4										
2E-C2	30-1		30-1										

PCI PERFORMANCE CONTRACTING INC PROMATEC

TRACEABILITY ID REGISTER

REPORT NUMBER 1

PROJECT NAME Saudia #1

PROJECT NUMBER 1039

FABRICATOR MIT

MT BARRIER WRAP	EXTERNAL FABRIC		INTERNAL FABRIC		FILLER MATERIAL		FILLER MATERIAL		THREAD		HARDWARE		INSPECTOR
MFG	Hitco		Hitco		Kaowool #8		N/A		Alpha R-24		N/A		JT
TYPE	Refrasil-18		Refrasil										
IDENTIFICATION NO.	I.D. NO.	R.R.#	I.D. NO.	R.R.#	I.D. NO.	R.R.#	I.D. NO.	R.R.#	I.D. NO.	R.R.#	R.R.#	R.R.#	BY / DATE
	4235495-	10/5/04	4235495-		4209A-MH	10/5/04			35957				3/23/05
2F-1	29-4	↓	29-4		↓	↓			↓				
2F-2	29-4		29-4										

PCI PERFORMANCE CONTRACTING INC PROMATEC

TRACEABILITY ID REGISTER

REPORT NUMBER 1

PROJECT NAME Sandia #1

PROJECT NUMBER 1039

FABRICATOR MIT

MT BARRIER WRAP	EXTERNAL FABRIC		INTERNAL FABRIC		FILLER MATERIAL		FILLER MATERIAL		THREAD		HARDWARE		INSPECTOR
MFG	Hitco		Hitco		Kaowool		N/A		Alpha		N/A		JT
TYPE	Refrasil-18		Refrasil		#8				R-24				
IDENTIFICATION NO.	I.D. NO.	R.R.#	I.D. NO.	R.R.#	I.D. NO.	R.R.#	I.D. NO.	R.R.#	I.D. NO.	R.R.#	R.R.#	R.R.#	BY / DATE
	4235495-	R05104	4235495-		4365A-2	R05105			35957	R05102			3/23/05
2G-1	29-6	↓	29-6		↓	↓			↓	↓			
2G-2	29-6		29-6										

PCI PERFORMANCE CONTRACTING INC PROMATEC

HOLD POINT INSPECTION & CLIENT FINAL SIGNOFF REPORT

(QCP-10003)

PROJECT NAME: SANDIA LAB HEMYC TEST #2 REPORT NO. _____

PROJECT NUMBER: 1039

STRUCTURAL INSPECTION

IDENTIFICATION NUMBER CABLE TRAY/CONDUIT	LOCATION - AREA/ELEVATION/ROOM ETC.	QC HOLD POINTS - STRUCTURAL INTEGRITY						VISUAL INSPECTION & RELEASE			
		1 DEAD AIR SPACE-2"	2 CLAMP DEVICES	3 FRAME SECURE	4 BLANKET ANCHORS	5 CONCRETE ANCHORS	6 OTHER ___	PASS	REJECT	DATE	BY
	N/A	N/A						N/A			

WRAP INSTALLATION INSPECTION & ACCEPTANCE

~~COND.~~ TRAY	BLANKET NO./FAB ORDER NO. Direct WRAP CABLE TRAY(S) TOP	BOT.	SIDE	SIDE	SIDE	SIDE	SIDE	SIDE	QC HOLD POINTS - WRAP INSTALLATION 1 OVERLAPS 2 ¾" MIN	2 WRAP RETAINE INTACT	3 BANDING DEFLECT	4 TERMINATION ADEQUATE	QC HOLD POINT 6 & FINAL ACCEPTANCE VISUAL INSPECTION ACCEPT	HOLD	REJECT	FINAL ACCEPTANCE DATE	BY
2A									✓	✓	✓	N/A	✓			3/23/05	JT
					N/A												
		N/A															

FORM QC-62/REV. 1 07-20-95

MAR. 23. 2005 9:02AM PCI PROMATEC

PCI PERFORMANCE CONTRACTING INC PROMATEC

HOLD POINT INSPECTION & CLIENT FINAL SIGNOFF REPORT

(QCP-10003)

PROJECT NAME: SANDIA LAB HEMYC TEST #2

REPORT NO. _____

PROJECT NUMBER: 1039

STRUCTURAL INSPECTION

IDENTIFICATION NUMBER CABLE TRAY/CONDUIT	LOCATION - AREA/ELEVATION/ROOM ETC.	QC HOLD POINTS - STRUCTURAL INTEGRITY						VISUAL INSPECTION & RELEASE			
		1 DEAD AIR SPACE-2"	2 CLAMP DEVICES	3 FRAME SECURE	4 BLANKET ANCHORS	5 CONCRETE ANCHORS	6 OTHER ____	PASS	REJECT	DATE	BY
2B	N/A	✓	✓	✓	✓	N/A		✓		3/23/05	JT

WRAP INSTALLATION INSPECTION & ACCEPTANCE

~~COND.~~ TRAY	BLANKET NO./FAB ORDER NO. CABLE TRAY(S)								QC HOLD POINTS - WRAP INSTALLATION				QC HOLD POINT 6 & FINAL ACCEPTANCE				
	TOP	BOT.	SIDE	SIDE	SIDE	SIDE	SIDE	SIDE	1 OVERLAPS 4" MIN	2 WRAP RETAINE INTACT	3 BANDING DEFLECT	4 TERMINATION ADEQUATE	VISUAL INSPECTION ACCEPT	VISUAL INSPECTION HOLD	VISUAL INSPECTION REJECT	FINAL ACCEPTANCE DATE	FINAL ACCEPTANCE BY
2B	✓	✓	✓	✓					✓	✓	N/A	N/A	✓			3/23/05	JT

FORM QC-62/REV. 1 07-20-95

HOLD POINT INSPECTION & CLIENT FINAL SIGNOFF REPORT

PERFORMANCE CONTRACTING INC
PROMATEC

(QCP-10003)
PROJECT NAME: SANDIA LAB HEMYC TEST #2
PROJECT NUMBER: 1039
REPORT NO. _____

STRUCTURAL INSPECTION

IDENTIFICATION NUMBER CABLE TRAY/CONDUIT	LOCATION - AREA/ELEVATION/ROOM ETC.	QC HOLD POINTS - STRUCTURAL INTEGRITY						VISUAL INSPECTION & RELEASE			
		1 DEAD AIR SPACE-2'	2 CLAMP DEVICES	3 FRAME SECURE	4 BLANKET ANCHORS	5 CONCRETE ANCHORS	6 OTHER ____	PASS	REJECT	DATE	BY
	NA										

WRAP INSTALLATION INSPECTION & ACCEPTANCE

BLANKET NO./FAB ORDER NO.									QC HOLD POINTS - WRAP INSTALLATION				QC HOLD POINT 6 & FINAL ACCEPTANCE				
~~COND.~~ TRAY	Direct WRAP CABLE TRAY(S)								1 OVERLAPS 2" MIN	2 WRAP RETAINE INTACT	3 BANDING DEFLECT	4 TERMINATION ADEQUATE	VISUAL INSPECTION			FINAL ACCEPTANCE	
	TOP	BOT.	SIDE	SIDE	SIDE	SIDE	SIDE	SIDE					ACCEPT	HOLD	REJECT	DATE	BY
2C									✓	✓	✓	N/A	✓			3/23/05	JT
						NA											
		NA															

FORM QC-62/REV. 1 07-20-95

MAR. 23. 2005 9:02AM PCI PROMATEC NO. 2339 P. 1

HOLD POINT INSPECTION & CLIENT FINAL SIGNOFF REPORT

PCI PERFORMANCE CONTRACTING INC PROMATEC

(QCP-10003)

PROJECT NAME: SANDIA LAB HEMYC TEST #2 REPORT NO. _____

PROJECT NUMBER: 1039

STRUCTURAL INSPECTION

IDENTIFICATION NUMBER CABLE TRAY/CONDUIT	LOCATION - AREA/ELEVATION/ROOM ETC.	QC HOLD POINTS - STRUCTURAL INTEGRITY						VISUAL INSPECTION & RELEASE			
		1 DEAD AIR SPACE-2"	2 CLAMP DEVICES	3 FRAME SECURE	4 BLANKET ANCHORS	5 CONCRETE ANCHORS	6 OTHER ____	PASS	REJECT	DATE	BY
2D	N/A	✓	✓	✓	✓	N/A		✓		3/23/05	JT

WRAP INSTALLATION INSPECTION & ACCEPTANCE

~~COND.~~ TRAY	BLANKET NO./FAB ORDER NO. CABLE TRAY(S) TOP	BOT.	SIDE	SIDE	SIDE	SIDE	SIDE	SIDE	QC HOLD POINTS - WRAP INSTALLATION 1 OVERLAPS 4" MIN	2 WRAP RETAINE INTACT	3 BANDING DEFLECT	4 TERMINATION ADEQUATE	QC HOLD POINT 6 & FINAL ACCEPTANCE VISUAL INSPECTION ACCEPT	HOLD	REJECT	FINAL ACCEPTANCE DATE	BY
2D	✓	✓	✓	✓					✓	✓	N/A	N/A	✓			3/23/05	JT
						N	A										

FORM QC-62/REV. 1 07-20-95

MAR. 23. 2005 9:02AM PCI PROMATEC NO. 2559 P. 1

HOLD POINT INSPECTION & CLIENT FINAL SIGNOFF REPORT

PCI PERFORMANCE CONTRACTING INC PROMATEC

(QCP-10003)

PROJECT NAME: SANDIA LAB HEMYC TEST #2 REPORT NO. 2

PROJECT NUMBER: 1039

STRUCTURAL INSPECTION

IDENTIFICATION NUMBER CABLE TRAY/CONDUIT	LOCATION - AREA/ELEVATION/ROOM ETC.	QC HOLD POINTS - STRUCTURAL INTEGRITY						VISUAL INSPECTION & RELEASE			
		1 DEAD AIR SPACE-2"	2 CLAMP DEVICES	3 FRAME SECURE	4 BLANKET ANCHORS	5 CONCRETE ANCHORS	6 OTHER ___	PASS	REJECT	DATE	BY
		N/A									

WRAP INSTALLATION INSPECTION & ACCEPTANCE

BLANKET NO./FAB ORDER NO.									QC HOLD POINTS - WRAP INSTALLATION				QC HOLD POINT 6 & FINAL ACCEPTANCE				
	Direct WRAP CABLE TRAY(S)								1	2	3	4	VISUAL INSPECTION			FINAL ACCEPTANCE	
~~COND.~~ CABLE DROP	TOP	BOT.	SIDE	SIDE	SIDE	SIDE	SIDE	SIDE	OVERLAPS 2" MIN	WRAP RETAINE INTACT	BANDING DEFLECT	TERMINATION ADEQUATE	ACCEPT	HOLD	REJECT	DATE	BY
2E									✓	✓	✓	N/A	✓			3/23/05	JT
					N/A												
		N/A															

FORM QC-62/REV. 1 07-20-95

MAR. 23. 2005 9:02AM PCI PROMATEC NO. 2339 P. 1

HOLD POINT INSPECTION & CLIENT FINAL SIGNOFF REPORT

PCI PERFORMANCE CONTRACTING INC PROMATEC

(QCP-10003)

PROJECT NAME: SANDIA LAB HEMYC TEST #2 REPORT NO. _____

PROJECT NUMBER: 1039

STRUCTURAL INSPECTION

IDENTIFICATION NUMBER CABLE TRAY/CONDUIT	LOCATION - AREA/ELEVATION/ROOM ETC.	QC HOLD POINTS - STRUCTURAL INTEGRITY						VISUAL INSPECTION & RELEASE			
		1 DEAD AIR SPACE-2"	2 CLAMP DEVICES	3 FRAME SECURE	4 BLANKET ANCHORS	5 CONCRETE ANCHORS	6 OTHER ____	PASS	REJECT	DATE	BY
2F		✓ *	✓	N/A	N/A	N/A		✓		3/23/05	JT
	2" CERAMIC FIBER * AIRSPACE										

WRAP INSTALLATION INSPECTION & ACCEPTANCE

BLANKET NO./FAB ORDER NO.									QC HOLD POINTS - WRAP INSTALLATION				QC HOLD POINT 6 & FINAL ACCEPTANCE				
COND. CABLE DROP	CABLE TRAY(S) TOP	BOT.	SIDE	SIDE	SIDE	SIDE	SIDE	SIDE	1 OVERLAPS 2x MIN	2 WRAP RETAINE INTACT	3 BANDING DEFLECT	4 TERMINATION ADEQUATE	VISUAL INSPECTION ACCEPT	HOLD	REJECT	FINAL ACCEPTANCE DATE	BY
2F					N/A				✓	✓	✓	N/A	✓			3/23/05	JT
		N/A															

FORM QC-62/REV. 1 07-20-95

MAR. 23. 2005 9:02AM PCI PROMATEC NO. 2339 P. 1

HOLD POINT INSPECTION & CLIENT FINAL SIGNOFF REPORT

PCI PERFORMANCE CONTRACTING INC PROMATEC

(QCP-10003)

PROJECT NAME: SANDIA LAB HEMYC TEST #2 REPORT NO. _____

PROJECT NUMBER: 1039

STRUCTURAL INSPECTION

IDENTIFICATION NUMBER CABLE TRAY/CONDUIT	LOCATION - AREA/ELEVATION/ROOM ETC.	QC HOLD POINTS - STRUCTURAL INTEGRITY						VISUAL INSPECTION & RELEASE			
		1 DEAD AIR SPACE-2'	2 CLAMP DEVICES	3 FRAME SECURE	4 BLANKET ANCHORS	5 CONCRETE ANCHORS	6 OTHER ____	PASS	REJECT	DATE	BY

WRAP INSTALLATION INSPECTION & ACCEPTANCE

BLANKET NO./FAB ORDER NO.									QC HOLD POINTS - WRAP INSTALLATION				QC HOLD POINT 6 & FINAL ACCEPTANCE				
~~COND.~~	DIRECT WRAP CABLE TRAY(S)								1 OVERLAPS 4" MIN	2 WRAP RETAINE INTACT	3 BANDING DEFLECT	4 TERMINATION ADEQUATE	VISUAL INSPECTION			FINAL ACCEPTANCE	
	TOP	BOT.	SIDE	SIDE	SIDE	SIDE	SIDE	SIDE					ACCEPT	HOLD	REJECT	DATE	BY
Box 2G									N/A	✓	✓	N/A	✓			3/23/05	JT

FORM QC-62/REV. 1 07-20-95

MAR. 23. 2005 9:02AM PCI PROMATEC NO. 2339 P. 1

Appendix G

QUALITY ASSURANCE DOCUMENTATION

Quality Assurance Statement

Omega Point Laboratories, Inc. is an independent, wholly owned company incorporated in the state of Texas, devoted to engineering, inspection, quality assurance and testing of building materials, products and assemblies. The company has developed and implemented a Quality Assurance Program designed to provide its clients with a planned procedure of order and document processing for inspection and testing services it provides to assure conformity to requirements, codes, standards and specifications. The Program is designed to meet the intent of ANSI 45.2 Quality Assurance Program Requirements for Nuclear Power Plants, and complies with the requirements of the ASME Code, SPPE, Military Standards and other less stringent programs. It is the Laboratory's intention to adhere strictly to this Program, to assure that the services offered to its clients remains of the highest quality and accuracy possible.

The overall responsibility of the supervision, operation and coordination of this Quality Assurance Program is that of the Quality Assurance Manager, a person not involved with the performance of the inspection or testing services, and who is under the full time employ of the Laboratory. This individual is responsible for implementing and enforcing all procedures presented in the Quality Assurance Manual and the Procedures Manual. All personnel involved with activities which fall under the scope of this Program are required to cooperate with the letter and intent of this Program.

All QA Surveillance documents remain on file at the Laboratory, and are available for inspection by authorized personnel in the performance of an on-site QA Audit. All materials, services and supplies utilized herein were obtained with appropriate QA Certifications of Compliance, and the inclusion of these in this report would not be practical nor useful to the reader.

OMEGA POINT LABORATORIES

ACCEPTABILITY DOCUMENTATION

PROJECT NO. 14790-123264

SANDIA NATIONAL LABORATORIES

The following signatures attest to the review and acceptance of each attribute (Hold Point) listed regarding the above-noted project:

I. TEST ARTICLE DECK

Omega Point Laboratories, Inc. — Date: 1/27/05

SANDIA National Laboratories — Date: 1/27/05

II. TEST ARTICLE RACEWAYS & JB

Omega Point Laboratories, Inc. — Date: 1/27/05

SANDIA National Laboratories — Date: 1/27/05

Omega Point Laboratories, Inc.
16015 Shady Falls Road
Elmendorf, Texas 78112-9784 USA
210-635-8100 / FAX: 210-635-8101 / 800-966-5253
www.opl.com moreinfo@opl.com

III. TEST SPECIMEN THERMOCOUPLE PLACEMENT

Omega Point Laboratories, Inc. — Date 2/8/05

SANDIA National Laboratories — Date 2/8/05

IV. COPPER WIRE THERMOCOUPLE PLACEMENT

Omega Point Laboratories, Inc. — Date 2/6/05

SANDIA National Laboratories — Date 2/8/05

V. PRE ERFBS INSTALLATION APPROVAL

Omega Point Laboratories, Inc. — Date 2/8/05

SANDIA National Laboratories — Date 2/8/05

VI. ERFBS INSTALLATION APPROVAL

Omega Point Laboratories, Inc. — Date 3/25/05

SANDIA National Laboratories — Date 3/25/05

OMEGA POINT LABORATORIES®

VII. COMPLETED PRE TEST ARTICLE INSPECTION

Omega Point Laboratories, Inc. — Date: 3/25/05

SANDIA National Laboratories — Date: 3/25/05

VIII. PRE-TEST DATA ACQUISITION VERIFICATION

Omega Point Laboratories, Inc. — Date: 3/25/05

SANDIA National Laboratories — Date: 3/25/05

IX. POST-TEST DATA ACQUISITION VERIFICATION

Omega Point Laboratories, Inc. — Date: ~~3/25/05~~ 4/11/05

SANDIA National Laboratories — Date: 4/20/2005

Test 2

EVENT LOG

Fire Resistance Test of Cable Trays Protected by Hemyc ERFBS

PROJECT NUMBER:

14790-123264

SANDIA NATIONAL LABORATORIES

EVENT LOG

SANDIA NATIONAL LABORATORIES
Client # 14790

NOTE:
This Log is used to document the date and note the significant events during the completion of test project #123264 for SANDIA National Laboratories. The following is a brief description of this project:

Project No. 123264: **One Hour ASTM E1725 Fire Test of 12" and 36" Cable Trays, a Cable Drop and a Junction Box Protected by Hemyc 1-Hour Rated ERFBS.**

ITEM	DATE	INIT'L
Request for Quotation (RFQ) # 7253 is received by Omega Point Labs from Patricia Brown of Sandia Labs.	11/5/04	CH
Technical Proposal No. PO41206-01 is issued to Sandia Labs by Deg Priest, President of Omega Point.	12/6	CH
Sandia Labs issues Purchase Order No. 389803 to Omega Point.	12/22	CH
Deg Priest accepts contract terms by signing and returning the P.O. signature page by fax on 12/22/04 and again on 12/27/04 for some minor changes to the P.O.	12/27	CH
Deg Priest completes the initial project drawings for Sandia review.	12/30	CH
Project Hold Points are determined by Frank Wyant, Sandia Technical contact and Connie Humphrey, OPL QA Director.	1/4/05	CH
Veda Patton, QA Assistant orders the steel components for the project test decks.	1/4	CH
Connie Humphrey receives approval for the qualification method of the thermocouple supplier. (10CFR50 app. B)	1/5	CH
OPL QA/QC personnel receive the steel shipment and OPL technicians begin fabricating the steel decks for all three Sandia projects.	1/5	CH
Drwg Fig. 3, assembly 2 revision is issued.	1/6	CH
Deck fabrication continues.	1/6/05	CH

Test 2

EVENT LOG

SANDIA NATIONAL LABORATORIES
Client # 14790

NOTE:
This Log is used to document the date and note the significant events during the completion of test project #123264 for SANDIA National Laboratories. The following is a brief description of this project:

Project No. 123264: **One Hour ASTM E1725 Fire Test of 12" and 36" Cable Trays, a Cable Drop and a Junction Box Protected by Hemyc 1-Hour Rated ERFBS.**

ITEM	DATE	INIT'L
OPI QA/QC personnel verify the dimensions on Project #123264, referred to as Assembly 2 or Test 2, per construction drawing.	1/7/05	CH
Determination was made by Frank Wyant regarding the extent of the video monitoring during the construction process of the test articles.	1/7	CH
Dee Priest issues the Junction Box thermocouple drawings.	1/11	CH
OPI QA/QC personnel receive the documents for Shipment # 44855 enroute to Omega Point from Sandia Labs.	1/11	CH
OPI QA/QC Personnel ship 46 quick Disconnect Thermocouples to Bruce Levin, Technical Contact at Sandia Labs for verification using Transmittal Letter #1126.	1/11	CH
Construction ~~continues~~ completed on the test decks. Verification is made by QA.	1/12	CH
OPI QA/QC Personnel receive the hardware shipment # 44855 from Sandia Labs. All items received.	1/14	CH
OPI technicians begin ~~continue~~ installation of the conduits and cable tray raceways together.	1/18	CH
Raceway fabrication continues	1/19	CH
Chuck Gihard Sandia Consultant arrives at OPI. Dee Priest meets with Chuck Giard to discuss project.	1/24	CH
Chuck Giard verifies test article measurements.	1/25	CH

EVENT LOG

SANDIA NATIONAL LABORATORIES
Client # 14790

NOTE:
This Log is used to document the date and note the significant events during the completion of test project #123264 for SANDIA National Laboratories. The following is a brief description of this project:

Project No. 123264: **One Hour ASTM E1725 Fire Test of 12" and 36" Cable Trays, a Cable Drop and a Junction Box Protected by Hemyc 1-Hour Rated ERFBS.**

ITEM	DATE	INIT'L
Peg Priest issues Figure 2, Rev. 2 Drawing for Test 2 Raceway layout.	1/25/05	CH
J.B. & Conduits and cable trays are removed from test decks and weighed by OPL technicians and re-installed. OPL QA/QC personnel re-verify the installation measurements when the raceways were installed to the test deck.	1/26	CH
Frank Wyant arrives at OPL and a group meeting is held involving all personnel.	1/27/05 CH 1/26 CH	
Cable trays are marked for thermocouple locations by OPL technicians.	1/28	CH
The unistrut frame for the Junction Box (J.B.) is weighed.	1/28	CH
The fiberglas wrapped thermocouples are installed on the cable trays by OPL technicians.	1/31	CH
TC's are verified by QA/QC personnel.	1/31	CH
The unistrut frame is installed to the test assembly. (Quick Disc. TC's arrive)	2/1 2/2/05	CH CH
Bare #8 copper wire is cut for the two air drops.	2/4	CH
TC's on the air drops are verified by OPL QA/QC personnel.	2/5	CH
Frank Wyant arrives to verify the TC's on the test article.	2/7	CH
~~2/7/05~~ Air drops are weighed and measured.	~~2/7~~ 2/8	CH
Frank Wyant verifies deck for project #123264 (Test 2)	2/23	CH
Frank Wyant departs OPL	2/24/05	CH

Test 2

EVENT LOG

SANDIA NATIONAL LABORATORIES
Client # 14790

NOTE:
This Log is used to document the date and note the significant events during the completion of test project #123264 for SANDIA National Laboratories. The following is a brief description of this project:

Project No. 123264: **One Hour ASTM E1725 Fire Test of 12" and 36" Cable Trays, a Cable Drop and a Junction Box Protected by Hemyc 1-Hour Rated ERFBS.**

ITEM	DATE	INIT'L
Sandia informed OPC that the cables trays and instrument and the thermocouples attached to all four cable trays are removed. The four cable trays are removed from the test deck by OPC technicians.	3/1/05	CH
Sandia approves cable trays from OPC stock that were the approved type.	3/1	CH
The new cabled trays from OPC are fabricated, weighed and installed into the test deck. Thermocouples were reinstalled on the new cable trays.	3/2	CH
OPC QA/QC re-verifies the trays and the thermocouples are verified (on 3/4.)	3/2	CH
Promatic crew arrives consisting of Mike Murphy, Michael Jordan, Jerry Thorton and Frank Haese. OPC installs the Junction Box on test deck 2.	3/3	CH
Mike Murphy and Jerry Thorton begin construction of the "stand-offs".	3/3	CH
Training on Hemyc installation was held by Michael Jordan for Mike Murphy, Jerry Thorton, Frank Haese and Melda Patton, OPC QA/QC assistant.	3/3	CH
Frank Wyant arrives from Sandia. Stand off construction and application to cable trays continues.	3/4	CH
	3/4/05	CH

EVENT LOG

SANDIA NATIONAL LABORATORIES
Client # 14790

NOTE:
This Log is used to document the date and note the significant events during the completion of test project #123264 for SANDIA National Laboratories. The following is a brief description of this project:

Project No. 123264: **One Hour ASTM E1725 Fire Test of 12" and 36" Cable Trays, a Cable Drop and a Junction Box Protected by Hemyc 1-Hour Rated ERFBS.**

ITEM	DATE	INIT'L
Frank Wyant and Cleda Patton verify TC's on Test deck 2.	3/4/05	CH
Stand-off construction and/or application continues on cable trays and JB.	3/5	CH
Promatec personnel depart OPL	3/5	CH
Michael Jordan and Frank Haese arrive. Bruce Levin arrives from Sandia.	3/18	CH
Frank Wyant and Bruce Levin decide to remove the standoffs from the junction box.	3/18	CH
Promatec installers begin applying the Hemyc insulation.	3/18	CH
Work continues on insulation.	3/20	CH
Willie Theis, Promatec installer, arrives and begins insulating.	3/21	CH
Frank Wyant arrives to inspect progress.	3/21	CH
Mike Murphy from Promatec arrives and Michael Jordan departs.	3/21	CH
Michael Jordan arrives and Mike Murphy departs OPL.	3/22	CH
Work continues with the Hemyc insulation.	3/22	CH
Promatec insulators depart OPL after finishing installing the Hemyc. Chuck Girard (Sandia contractor) arrives at OPL.	3/23	CH
Frank Wyant and Chuck Girard witness the video taping of the installation of the test assembly onto the test furnace. Deg Priest oversees this procedure.	3/24	CH
	3/24/05	CH

Test 2

EVENT LOG

SANDIA NATIONAL LABORATORIES
Client # 14790

NOTE:
This Log is used to document the date and note the significant events during the completion of test project #123264 for SANDIA National Laboratories. The following is a brief description of this project:

Project No. 123264: **One Hour ASTM E1725 Fire Test of 12" and 36" Cable Trays, a Cable Drop and a Junction Box Protected by Hemyc 1-Hour Rated ERFBS.**

ITEM	DATE	INIT'L
David Lew, Mark Salley and Roy Woods arrive from the USNRC.	3/24	CH
Cleda Patton OPL QA/QC assistant verifies data acquisition TC's (335).	3/24	CH
Pre test data acquisition requirement has been satisfied with the post test calibration done by Mike Dey on 3/11/05 for Sandia Proj. 123263 (Test 1) approved by Frank Wyant.	3/24	CH
On site to witness the fire test of Sandia Project# 123264 are:	3/25	CH
Frank Wyant — Sandia		
Bruce Lebrin — "		
Chuck Hirard — Sandia Contractor		
Mark Salley — USNRC		
Roy Woods — "		
David Lew — "		
Alex Klein — "		
Randy Brown — Promatec Technologies		
Michael Jordan — " "		
Frank Haese — " "		
On site to perform the fire test are:	3/25	CH
Deg Pfost — Omega Point Labs		
Mike Dey — " " "		
Cleda Patton — " " "		
Connie Humphrey — " " "		
Oscar Estrada — " " "		
Laudencio Castanon — " " "		
Troy Brongtad — " " "		
A quality control check of the Hemyc wrap was done with ~~Roy Woods~~, ~~Mark Salley~~, Michael Jordan, Frank Wyant, Roy Woods and Cleda Patton. Cleda Patton video taped the installation of two additional stainless steel bands.	CH 3/25/05 3/25/05	CH

CH 3/25/05

EVENT LOG

SANDIA NATIONAL LABORATORIES
Client # 14790

NOTE:
This Log is used to document the date and note the significant events during the completion of test project #123264 for SANDIA National Laboratories. The following is a brief description of this project:

Project No. 123264: **One Hour ASTM E1725 Fire Test of 12" and 36" Cable Trays, a Cable Drop and a Junction Box Protected by Hemyc 1-Hour Rated ERFBS.**

ITEM	DATE	INIT'L
The pre-test checklist is performed by Mike Dey, Mgr. Dept 02 and Dey Priest, President and Chief Technical Officer of OPL. The test acceptance is signed.	3/25/05	CH
The One-hour test of Project #123264 began at 9:10 am. The temperature at the time the test started was 73°F with 89% Relative Humidity.	3/25	CH
The one hour test is completed at 10:10 am and the data acquisition thermocouples are disconnected from the data acquisition equipment. The test article is moved by overhead crane to the hose stream area. A five minute hose stream test followed the fire test using a 1½" fog nozzle with a 15 degree spray pattern at 75 psi from a distance of ten feet.	3/25	CH
The tear down and inspection of the test article was completed after the assembly cooled down. The was performed by OPL technicians and witnessed by client and USNRC personnel on site.	3/25	CH
Post test data acquisition equip. verification was performed by Mike Dey, OPL Dept 02 Manager.	4/1/05	CH
-end-		

Omega Point Laboratories, Inc.
16015 Shady Falls Road
Elmendorf, Texas 78112
800-966-5253 FAX 210-635-8101

Certificate of Verification

Certification No.:	92147
Verification Date:	03/11/2005
Re-verification Date:	09/11/2005
Manufacturer:	Yokogawa
Model No.:	300 Channel DAU-
Serial No.:	48JF0082
Equipment Description:	300 Channel Data Acquisition System with YOKOGAWA Darwin Series
Calibration Sources:	Tegam T-207318 due: 05/03/2005

PERFORMANCE:

Temperature: (75°F) 1.3/-0.3	Temperature: (150°F) 1.2/-0.3	Temperature: (300°F) 1.3/-0.5	Temperature: (400°F) +1.2/-0.4	Temperature: (1000°F) 1.3/-0.1	Temperature: (2000°F) 1.7/-0.8

Measurement Uncertainty: ± 0.2%

Verification Performed by:

Mike Dey
Manager Fire Resistance

Verification Approved by:

Deg Priest
President/Chief Technical Officer

Channel Verification for Yokogawa 300 Channel

Serial No.: 48JF0082

Calibrator Used: T-207318

Temperature Setting (°F): 75.0

Channel No.	Reading (°F)	+/-	Channel No.	Reading (°F)	+/-	Channel No.	Reading (°F)	+/-
1	75.4	0.4	101	75.2	0.2	201	74.8	-0.2
2	75.2	0.2	102	75.2	0.2	202	75.2	-0.2
3	75.2	0.2	103	75.2	0.2	203	75.4	0.2
4	75.2	0.2	104	75.0	0.0	204	75.4	0.4
5	75.2	0.2	105	75.0	0.0	205	75.2	0.4
6	75.2	0.2	106	75.0	0.0	206	75.4	0.2
7	75.2	0.2	107	75.4	0.4	207	75.4	0.4
8	75.4	0.4	108	75.0	0.0	208	75.4	0.4
9	75.4	0.4	109	75.4	0.4	209	75.4	0.4
10	75.7	0.7	110	75.7	0.7	210	75.2	0.4
11	75.2	0.2	111	75.2	0.2	211	75.4	0.2
12	75.2	0.2	112	75.4	0.4	212	75.4	0.4
13	75.2	0.2	113	75.7	0.7	213	75.2	0.4
14	75.2	0.2	114	75.7	0.7	214	75.2	0.2
15	75.2	0.2	115	75.7	0.7	215	75.2	0.2
16	75.2	0.2	116	75.7	0.7	216	75.2	0.2
17	75.2	0.2	117	75.7	0.7	217	75.4	0.2
18	75.2	0.2	118	75.7	0.7	218	75.2	0.4
19	75.4	0.4	119	75.7	0.7	219	75.4	0.2
20	75.7	0.7	120	75.9	0.9	220	75.6	0.4
21	75.2	0.2	121	75.6	0.6	221	74.7	0.6
22	75.2	0.2	122	75.6	0.6	222	74.8	-0.3
23	75.2	0.2	123	75.4	0.4	223	74.8	-0.2
24	75.2	0.2	124	75.6	0.6	224	74.8	-0.2
25	75.4	0.4	125	75.7	0.7	225	75.0	-0.2
26	75.4	0.4	126	75.6	0.6	226	75.2	0.0
27	75.6	0.6	127	75.7	0.7	227	75.2	0.2
28	75.6	0.6	128	75.7	0.7	228	75.2	0.2
29	75.7	0.7	129	75.9	0.9	229	75.4	0.2
30	75.9	0.9	130	76.3	1.3	230	75.7	0.4
31	75.6	0.6	131	75.2	0.2	231	75.2	0.7
32	75.6	0.6	132	75.2	0.2	232	75.2	0.2
33	75.6	0.6	133	75.2	0.2	233	75.2	0.2
34	75.6	0.6	134	75.2	0.2	234	75.4	0.2
35	75.4	0.4	135	75.4	0.4	235	75.4	0.4
36	75.6	0.6	136	75.2	0.2	236	75.4	0.4
37	75.7	0.7	137	75.2	0.2	237	75.4	0.4
38	75.7	0.7	138	75.4	0.4	238	75.6	0.4
39	75.7	0.7	139	75.6	0.6	239	75.7	0.6
40	75.9	0.9	140	75.7	0.7	240	75.7	0.7
41	75.0	0.0	141	75.2	0.2	241	75.6	0.7
42	75.0	0.0	142	75.0	0.0	242	75.6	0.6
43	75.2	0.2	143	75.2	0.2	243	75.4	0.6
44	75.2	0.2	144	75.2	0.2	244	75.6	0.4
45	75.2	0.2	145	75.2	0.2	245	75.6	0.6
46	75.2	0.2	146	75.2	0.2	246	75.6	0.6
47	75.4	0.4	147	75.4	0.4	247	75.7	0.6
48	75.6	0.6	148	75.6	0.6	248	75.9	0.7
49	75.2	0.2	149	75.6	0.6	249	75.7	0.9
50	75.7	0.7	150	75.7	0.7	250	76.1	0.7
51	74.8	-0.2	151	75.6	0.6	251	75.0	1.1
52	75.2	0.2	152	75.6	0.6	252	75.0	0.0
53	75.2	0.2	153	75.6	0.6	253	75.0	0.0
54	75.2	0.2	154	75.7	0.7	254	75.2	0.0

55	75.2	0.2	155	75.7	0.7	255	75.2	0.2			
56	75.2	0.2	156	75.7	0.7	256	75.2	0.2			
57	75.2	0.2	157	75.7	0.7	257	75.2	0.2			
58	75.4	0.4	158	75.7	0.7	258	75.4	0.2			
59	75.6	0.6	159	76.1	1.1	259	75.6	0.4			
60	75.7	0.7	160	76.3	1.3	260	75.9	0.6			
61	75.6	0.6	161	75.6	0.6	261	75.4	0.9			
62	75.4	0.4	162	75.7	0.7	262	75.4	0.4			
63	75.4	0.4	163	75.6	0.6	263	75.4	0.4			
64	75.4	0.4	164	75.7	0.7	264	75.4	0.4			
65	75.6	0.6	165	75.7	0.7	265	75.4	0.4			
66	75.6	0.6	166	75.7	0.7	266	75.4	0.4			
67	75.6	0.6	167	75.9	0.9	267	75.6	0.4			
68	75.7	0.7	168	75.9	0.9	268	75.7	0.6			
69	75.7	0.7	169	76.1	1.1	269	75.7	0.7			
70	75.9	0.9	170	76.3	1.3	270	75.7	0.7			
71	75.2	0.2	171	75.2	0.2	271	75.4	0.7			
72	75.2	0.2	172	75.2	0.2	272	75.2	0.4			
73	75.2	0.2	173	75.4	0.4	273	75.4	0.2			
74	75.2	0.2	174	75.4	0.4	274	75.4	0.4			
75	75.6	0.6	175	75.2	0.2	275	75.6	0.4			
76	75.6	0.6	176	75.4	0.4	276	75.6	0.6			
77	75.6	0.6	177	75.4	0.4	277	75.7	0.6			
78	75.6	0.6	178	75.6	0.6	278	75.7	0.7			
79	75.7	0.7	179	75.7	0.7	279	75.7	0.7			
80	75.9	0.9	180	75.9	0.9	280	75.9	0.7			
81	75.4	0.4	181	75.4	0.4	281	74.7	0.9			
82	75.4	0.4	182	75.4	0.4	282	74.8	-0.3			
83	75.6	0.6	183	75.4	0.4	283	75.0	-0.2			
84	75.6	0.6	184	75.6	0.6	284	74.8	0.0			
85	75.6	0.6	185	75.6	0.6	285	75.2	-0.2			
86	75.6	0.6	186	75.6	0.6	286	75.2	0.2			
87	75.6	0.6	187	75.7	0.7	287	75.2	0.2			
88	75.7	0.7	188	75.7	0.7	288	75.2	0.2			
89	75.7	0.7	189	75.7	0.7	289	75.4	0.2			
90	75.9	0.9	190	76.1	1.1	290	75.7	0.4			
91	75.4	0.4	191	75.0	0.0	291	74.8	0.7			
92	75.4	0.4	192	75.0	0.0	292	75.0	-0.2			
93	75.2	0.2	193	75.0	0.0	293	75.2	0.0			
94	75.2	0.2	194	75.2	0.2	294	75.2	0.2			
95	75.4	0.4	195	75.4	0.4	295	75.2	0.2			
96	75.4	0.4	196	75.4	0.4	296	75.2	0.2			
97	75.4	0.4	197	75.2	0.2	297	75.2	0.2			
98	75.7	0.7	198	75.4	0.4	298	75.6	0.2			
99	75.7	0.7	199	75.4	0.4	299	75.2	0.6			
100	75.9	0.9	200	75.7	0.7	300	75.7	0.2			

Range for 75°F Signal: **+1.3/-0.3**
Allowable range: ±1.8

Within specification for this temperature? Yes

Performed by: Mike Day MD

Mgr. Fire Resistance — 3/11/05
Title — Date

Approved by:

President — 3/11/05
Title — Date

Channel Verification for Yokogawa 300 Channel

Serial No.: 48JF0082

Calibrator Used: T-207318

Temperature Setting (°F): 150.0

Channel No.	Reading (°F)	+/-	Channel No.	Reading (°F)	+/-	Channel No.	Reading (°F)	+/-
1	150.3	0.3	101	150.1	0.1	201	150.1	0.1
2	150.3	0.3	102	150.3	0.3	202	150.1	0.1
3	150.1	0.1	103	150.3	0.3	203	150.1	0.1
4	150.1	0.1	104	150.3	0.3	204	150.1	0.1
5	150.3	0.3	105	150.3	0.3	205	150.1	0.1
6	150.3	0.3	106	150.4	0.4	206	150.3	0.3
7	150.3	0.3	107	150.6	0.6	207	150.3	0.3
8	150.3	0.3	108	150.6	0.6	208	150.3	0.3
9	150.4	0.4	109	150.8	0.8	209	150.3	0.3
10	150.8	0.8	110	151.0	1.0	210	150.8	0.8
11	150.3	0.3	111	150.3	0.3	211	149.9	-0.1
12	150.3	0.3	112	150.3	0.3	212	149.9	-0.1
13	150.1	0.1	113	150.3	0.3	213	149.9	-0.1
14	150.3	0.3	114	150.3	0.3	214	149.9	-0.1
15	150.1	0.1	115	150.3	0.3	215	149.9	-0.1
16	150.3	0.3	116	150.4	0.4	216	150.3	0.3
17	150.3	0.3	117	150.4	0.4	217	150.3	0.3
18	150.3	0.3	118	150.6	0.6	218	150.3	0.3
19	150.3	0.3	119	150.8	0.8	219	150.4	0.4
20	150.6	0.6	120	151.0	1.0	220	150.8	0.8
21	150.3	0.3	121	150.6	0.6	221	149.7	-0.3
22	150.1	0.1	122	150.4	0.4	222	149.9	-0.1
23	150.1	0.1	123	150.4	0.4	223	149.9	-0.1
24	150.3	0.3	124	150.4	0.4	224	149.9	-0.1
25	150.3	0.3	125	150.4	0.4	225	150.1	0.1
26	150.4	0.4	126	150.4	0.4	226	150.1	0.1
27	150.4	0.4	127	150.6	0.6	227	150.1	0.1
28	150.4	0.4	128	150.6	0.6	228	150.3	0.3
29	150.6	0.6	129	150.6	0.6	229	150.3	0.3
30	150.8	0.8	130	150.8	0.8	230	150.8	0.8
31	150.4	0.4	131	149.9	-0.1	231	150.1	0.1
32	150.4	0.4	132	149.9	-0.1	232	150.1	0.1
33	150.4	0.4	133	149.9	-0.1	233	150.3	0.3
34	150.4	0.4	134	150.1	0.1	234	150.3	0.3
35	150.4	0.4	135	150.1	0.1	235	150.3	0.3
36	150.6	0.6	136	150.1	0.1	236	150.3	0.3
37	150.6	0.6	137	150.3	0.3	237	150.3	0.3
38	150.8	0.8	138	150.3	0.3	238	150.3	0.3
39	150.8	0.8	139	150.3	0.3	239	150.6	0.6
40	151.2	1.2	140	150.6	0.6	240	150.8	0.8
41	150.3	0.3	141	149.9	-0.1	241	150.6	0.6
42	150.3	0.3	142	150.1	0.1	242	150.4	0.4
43	150.1	0.1	143	150.1	0.1	243	150.6	0.6
44	150.3	0.3	144	150.1	0.1	244	150.4	0.4
45	150.3	0.3	145	150.3	0.3	245	150.8	0.8
46	150.3	0.3	146	150.3	0.3	246	150.8	0.8
47	150.3	0.3	147	150.3	0.3	247	150.8	0.8
48	150.4	0.4	148	150.4	0.4	248	150.8	0.8
49	150.4	0.4	149	150.4	0.4	249	150.8	0.8
50	150.6	0.6	150	150.6	0.6	250	151.2	1.2
51	149.9	-0.1	151	150.4	0.4	251	150.4	0.4
52	149.9	-0.1	152	150.4	0.4	252	150.8	0.8
53	150.1	0.1	153	150.4	0.4	253	149.7	-0.3
54	150.1	0.1	154	150.3	0.3	254	149.9	-0.1

55	150.3	0.3	155	150.4	0.4	255	149.9	-0.1			
56	150.3	0.3	156	150.4	0.4	256	149.9	-0.1			
57	150.3	0.3	157	150.4	0.4	257	150.1	0.1			
58	150.4	0.4	158	150.6	0.6	258	150.1	0.1			
59	150.6	0.6	159	150.8	0.8	259	150.1	0.1			
60	150.8	0.8	160	151.0	1.0	260	150.3	0.3			
61	150.4	0.4	161	150.3	0.3	261	150.3	0.3			
62	150.3	0.3	162	150.3	0.3	262	150.8	0.8			
63	150.3	0.3	163	150.3	0.3	263	150.8	0.8			
64	150.3	0.3	164	150.3	0.3	264	149.9	-0.1			
65	150.3	0.3	165	150.4	0.4	265	150.1	0.1			
66	150.4	0.4	166	150.4	0.4	266	150.1	0.1			
67	150.4	0.4	167	150.6	0.6	267	150.1	0.1			
68	150.6	0.6	168	150.6	0.6	268	150.3	0.3			
69	150.8	0.8	169	150.8	0.8	269	150.3	0.3			
70	151.0	1.0	170	151.0	1.0	270	150.8	0.8			
71	150.3	0.3	171	149.9	-0.1	271	150.8	0.8			
72	150.3	0.3	172	149.9	-0.1	272	150.1	0.1			
73	150.3	0.3	173	150.1	0.1	273	150.1	0.1			
74	150.3	0.3	174	150.1	0.1	274	150.1	0.1			
75	150.3	0.3	175	150.3	0.3	275	150.4	0.4			
76	150.4	0.4	176	150.3	0.3	276	150.4	0.4			
77	150.4	0.4	177	150.3	0.3	277	150.4	0.4			
78	150.4	0.4	178	150.4	0.4	278	150.4	0.4			
79	150.6	0.6	179	150.6	0.6	279	150.8	0.8			
80	150.8	0.8	180	150.8	0.8	280	151.0	1.0			
81	150.3	0.3	181	150.3	0.3	281	149.7	-0.3			
82	150.1	0.1	182	150.3	0.3	282	149.7	-0.3			
83	150.3	0.3	183	150.3	0.3	283	149.9	-0.1			
84	150.3	0.3	184	150.3	0.3	284	149.9	-0.1			
85	150.3	0.3	185	150.3	0.3	285	150.1	0.1			
86	150.3	0.3	186	150.4	0.4	286	150.1	0.1			
87	150.3	0.3	187	150.4	0.4	287	150.1	0.1			
88	150.4	0.4	188	150.4	0.4	288	150.1	0.1			
89	150.4	0.4	189	150.6	0.6	289	150.3	0.3			
90	150.8	0.8	190	151.0	1.0	290	150.6	0.6			
91	150.3	0.3	191	150.1	0.1	291	149.7	-0.3			
92	150.3	0.3	192	150.1	0.1	292	149.7	-0.3			
93	150.3	0.3	193	150.3	0.3	293	149.9	-0.1			
94	150.4	0.4	194	150.3	0.3	294	150.1	0.1			
95	150.4	0.4	195	150.3	0.3	295	150.1	0.1			
96	150.4	0.4	196	150.3	0.3	296	150.1	0.1			
97	150.4	0.4	197	150.4	0.4	297	150.1	0.1			
98	150.4	0.4	198	150.4	0.4	298	150.3	0.3			
99	150.4	0.4	199	150.6	0.6	299	150.3	0.3			
100	150.8	0.8	200	150.8	0.8	300	150.8	0.8			

Range for 150°F Signal: +1.2/-0.3

Allowable range: ±1.8

Within specification for this temperature? Yes

Performed by: Mike Dey MD

Mgr. Fire Resistance — Title

3/11/05 — Date

Approved by:

President — Title

3/11/05 — Date

Channel Verification for Yokogawa 300 Channel

Serial No.: 48JF0082

Calibrator Used: T-207318

Temperature Setting (°F): 300.0

Channel No.	Reading (°F)	+/-	Channel No.	Reading (°F)	+/-	Channel No.	Reading (°F)	+/-
1	300.2	0.2	101	299.8	-0.2	201	300.0	0.0
2	300.2	0.2	102	299.8	-0.2	202	300.0	0.0
3	300.0	0.0	103	300.2	0.2	203	300.0	0.0
4	300.2	0.2	104	300.2	0.2	204	300.2	0.2
5	300.2	0.2	105	300.2	0.2	205	300.2	0.2
6	300.2	0.2	106	300.2	0.2	206	300.2	0.2
7	300.2	0.2	107	300.2	0.2	207	300.4	0.4
8	300.4	0.4	108	300.4	0.4	208	300.4	0.4
9	300.6	0.6	109	300.4	0.4	209	300.6	0.6
10	300.7	0.7	110	300.7	0.7	210	300.7	0.7
11	300.2	0.2	111	300.0	0.0	211	299.8	-0.2
12	300.2	0.2	112	300.0	0.0	212	299.8	-0.2
13	300.2	0.2	113	300.2	0.2	213	300.0	0.0
14	300.2	0.2	114	300.2	0.2	214	300.0	0.0
15	300.2	0.2	115	300.2	0.2	215	300.0	0.0
16	300.2	0.2	116	300.2	0.2	216	300.2	0.2
17	300.2	0.2	117	300.4	0.4	217	300.2	0.2
18	300.2	0.2	118	300.4	0.4	218	300.2	0.2
19	300.4	0.4	119	300.6	0.6	219	300.2	0.2
20	300.6	0.6	120	300.7	0.7	220	300.6	0.6
21	300.2	0.2	121	300.4	0.4	221	299.5	-0.5
22	300.2	0.2	122	300.2	0.2	222	299.7	-0.3
23	300.2	0.2	123	300.2	0.2	223	299.7	-0.3
24	300.2	0.2	124	300.2	0.2	224	299.7	-0.3
25	300.2	0.2	125	300.4	0.4	225	300.0	0.0
26	300.4	0.4	126	300.4	0.4	226	300.2	0.2
27	300.6	0.6	127	300.6	0.6	227	300.2	0.2
28	300.2	0.2	128	300.7	0.7	228	300.2	0.2
29	300.2	0.2	129	300.7	0.7	229	300.4	0.4
30	300.2	0.2	130	300.9	0.9	230	300.7	0.7
31	300.2	0.2	131	300.0	0.0	231	300.0	0.0
32	300.6	0.6	132	299.8	-0.2	232	300.0	0.0
33	300.4	0.4	133	299.8	-0.2	233	299.8	-0.2
34	300.6	0.6	134	300.0	0.0	234	300.0	0.0
35	300.6	0.6	135	300.0	0.0	235	300.0	0.0
36	300.6	0.6	136	300.2	0.2	236	300.2	0.2
37	300.4	0.4	137	300.2	0.2	237	300.2	0.2
38	300.6	0.6	138	300.2	0.2	238	300.2	0.2
39	300.7	0.7	139	300.2	0.2	239	300.6	0.6
40	301.1	1.1	140	300.6	0.6	240	300.7	0.7
41	300.2	0.2	141	299.8	-0.2	241	300.2	0.2
42	300.2	0.2	142	299.8	-0.2	242	300.2	0.2
43	300.2	0.2	143	300.0	0.0	243	300.2	0.2
44	300.2	0.2	144	300.0	0.0	244	300.2	0.2
45	300.2	0.2	145	300.0	0.0	245	300.4	0.4
46	300.2	0.2	146	300.0	0.0	246	300.4	0.4
47	300.2	0.2	147	300.2	0.2	247	300.6	0.6
48	300.4	0.4	148	300.2	0.2	248	300.7	0.7
49	300.6	0.6	149	300.4	0.4	249	300.7	0.7
50	300.7	0.7	150	300.6	0.6	250	301.3	1.3
51	299.8	-0.2	151	300.4	0.4	251	300.2	0.2
52	299.8	-0.2	152	300.4	0.4	252	300.0	0.0
53	299.8	-0.2	153	300.4	0.4	253	300.2	0.2
54	300.0	0.0	154	300.4	0.4	254	300.2	0.2
55	300.0	0.0	155	300.6	0.6	255	300.2	0.2
56	300.2	0.2	156	300.4	0.4	256	300.2	0.2

57	300.2	0.2	157	300.6	0.6	257	300.2	0.2			
58	300.2	0.2	158	300.7	0.7	258	300.2	0.2			
59	300.4	0.4	159	300.7	0.7	259	300.4	0.4			
60	300.7	0.7	160	301.1	1.1	260	300.7	0.7			
61	300.2	0.2	161	300.4	0.4	261	300.0	0.0			
62	300.2	0.2	162	300.4	0.4	262	300.2	0.2			
63	300.2	0.2	163	300.4	0.4	263	300.2	0.2			
64	300.2	0.2	164	300.4	0.4	264	300.2	0.2			
65	300.4	0.4	165	300.4	0.4	265	300.2	0.2			
66	300.4	0.4	166	300.6	0.6	266	300.2	0.2			
67	300.6	0.6	167	300.6	0.6	267	300.4	0.4			
68	300.6	0.6	168	300.7	0.7	268	300.6	0.6			
69	300.7	0.7	169	300.7	0.7	269	300.7	0.7			
70	300.7	0.7	170	301.3	1.3	270	301.1	1.1			
71	300.2	0.2	171	300.0	0.0	271	300.2	0.2			
72	300.2	0.2	172	300.0	0.0	272	300.0	0.0			
73	300.2	0.2	173	300.2	0.2	273	300.2	0.2			
74	300.2	0.2	174	300.2	0.2	274	300.2	0.2			
75	300.4	0.4	175	300.2	0.2	275	300.2	0.2			
76	300.4	0.4	176	300.2	0.2	276	300.2	0.2			
77	300.4	0.4	177	300.2	0.2	277	300.4	0.4			
78	300.4	0.4	178	300.2	0.2	278	300.4	0.4			
79	300.7	0.7	179	300.4	0.4	279	300.4	0.4			
80	300.9	0.9	180	300.7	0.7	280	300.7	0.7			
81	300.2	0.2	181	300.4	0.4	281	299.7	-0.3			
82	300.2	0.2	182	300.2	0.2	282	299.8	-0.2			
83	300.4	0.4	183	300.2	0.2	283	299.7	-0.3			
84	300.4	0.4	184	300.2	0.2	284	299.8	-0.2			
85	300.4	0.4	185	300.4	0.4	285	300.0	0.0			
86	300.4	0.4	186	300.4	0.4	286	300.2	0.2			
87	300.6	0.6	187	300.6	0.6	287	300.2	0.2			
88	300.6	0.6	188	300.6	0.6	288	300.2	0.2			
89	300.7	0.7	189	300.7	0.7	289	300.4	0.4			
90	300.9	0.9	190	301.1	1.1	290	300.7	0.7			
91	300.2	0.2	191	300.2	0.2	291	299.7	-0.3			
92	300.2	0.2	192	300.2	0.2	292	299.8	-0.2			
93	300.2	0.2	193	300.2	0.2	293	300.0	0.0			
94	300.2	0.2	194	300.2	0.2	294	300.0	0.0			
95	300.2	0.2	195	300.2	0.2	295	300.0	0.0			
96	300.2	0.2	196	300.2	0.2	296	300.2	0.2			
97	300.4	0.4	197	300.4	0.4	297	300.2	0.2			
98	300.6	0.6	198	300.4	0.4	298	300.4	0.4			
99	300.4	0.4	199	300.6	0.6	299	300.4	0.4			
100	300.7	0.7	200	300.7	0.7	300	300.7	0.7			

Range for 300°F Signal: **+1.3/-0.5**

Allowable range ±1.9

Within specification for this temperature? Yes

Performed by: Mike Day MD

Mgr. Fire Resistance — 3/11/05

Title — Date

Approved by:

President — 3/11/05

Title — Date

Channel Verification for Yokogawa 300 Channel

Serial No.: 48JF0082

Calibrator Used: T-207318

Temperature Setting (°F): 400.0

Channel No.	Reading (°F)	+/-	Channel No.	Reading (°F)	+/-	Channel No.	Reading (°F)	+/-
1	400.3	0.3	101	400.1	0.1	201	400.3	0.3
2	400.3	0.3	102	400.3	0.3	202	400.3	0.3
3	400.1	0.1	103	400.3	0.3	203	400.3	0.3
4	400.1	0.1	104	400.3	0.3	204	400.3	0.3
5	400.1	0.1	105	400.3	0.3	205	400.3	0.3
6	400.3	0.3	106	400.3	0.3	206	400.5	0.5
7	400.3	0.3	107	400.3	0.3	207	400.6	0.6
8	400.3	0.3	108	400.3	0.3	208	400.8	0.8
9	400.3	0.3	109	400.5	0.5	209	400.8	0.8
10	400.6	0.6	110	400.6	0.6	210	400.8	0.8
11	400.1	0.1	111	400.1	0.1	211	399.9	-0.1
12	400.1	0.1	112	400.3	0.3	212	400.1	0.1
13	399.9	-0.1	113	400.3	0.3	213	400.1	0.1
14	400.1	0.1	114	400.3	0.3	214	400.1	0.1
15	400.1	0.1	115	400.5	0.5	215	400.1	0.1
16	400.1	0.1	116	400.6	0.6	216	400.3	0.3
17	400.1	0.1	117	400.6	0.6	217	400.3	0.3
18	400.3	0.3	118	400.8	0.8	218	400.3	0.3
19	400.3	0.3	119	400.8	0.8	219	400.3	0.3
20	400.5	0.5	120	400.8	0.8	220	400.6	0.6
21	400.1	0.1	121	400.5	0.5	221	399.7	-0.3
22	400.1	0.1	122	400.5	0.5	222	399.9	-0.1
23	400.3	0.3	123	400.3	0.3	223	400.1	0.1
24	400.3	0.3	124	400.3	0.3	224	400.1	0.1
25	400.5	0.5	125	400.3	0.3	225	400.1	0.1
26	400.1	0.1	126	400.3	0.3	226	400.1	0.1
27	400.1	0.1	127	400.5	0.5	227	400.3	0.3
28	400.3	0.3	128	400.6	0.6	228	400.3	0.3
29	400.3	0.3	129	400.8	0.8	229	400.5	0.5
30	400.3	0.3	130	401.0	1.0	230	400.6	0.6
31	400.5	0.5	131	399.9	-0.1	231	400.3	0.3
32	400.3	0.3	132	399.9	-0.1	232	400.1	0.1
33	400.3	0.3	133	399.9	-0.1	233	400.3	0.3
34	400.3	0.3	134	399.9	-0.1	234	400.3	0.3
35	400.3	0.3	135	399.9	-0.1	235	400.3	0.3
36	400.5	0.5	136	399.9	-0.1	236	400.3	0.3
37	400.5	0.5	137	399.9	-0.1	237	400.5	0.5
38	400.6	0.6	138	400.1	0.1	238	400.5	0.5
39	400.8	0.8	139	400.3	0.3	239	400.6	0.6
40	400.8	0.8	140	400.5	0.5	240	400.8	0.8
41	399.9	-0.1	141	399.7	-0.3	241	400.3	0.3
42	399.9	-0.1	142	399.7	-0.3	242	400.3	0.3
43	399.9	-0.1	143	399.9	-0.1	243	400.3	0.3
44	400.1	0.1	144	399.9	-0.1	244	400.3	0.3
45	400.1	0.1	145	399.9	-0.1	245	400.3	0.3
46	400.1	0.1	146	400.1	0.1	246	400.5	0.5
47	400.1	0.1	147	400.1	0.1	247	400.6	0.6
48	400.3	0.3	148	400.3	0.3	248	400.6	0.6
49	400.3	0.3	149	400.3	0.3	249	401.2	1.2
50	400.6	0.6	150	400.6	0.6	250	401.2	1.2
51	399.7	-0.3	151	400.5	0.5	251	400.1	0.1
52	399.9	-0.1	152	400.3	0.3	252	400.1	0.1
53	400.1	0.1	153	400.3	0.3	253	400.1	0.1
54	400.1	0.1	154	400.5	0.5	254	400.3	0.3

55	400.1	0.1	155
56	400.3	0.3	156
57	400.3	0.3	157
58	400.3	0.3	158
59	400.5	0.5	159
60	400.6	0.6	160
61	400.6	0.6	161
62	400.3	0.3	162
63	400.3	0.3	163
64	400.3	0.3	164
65	400.3	0.3	165
66	400.3	0.3	166
67	400.5	0.5	167
68	400.6	0.6	168
69	400.8	0.8	169
70	400.8	0.8	170
71	400.3	0.3	171
72	400.3	0.3	172
73	400.3	0.3	173
74	400.5	0.5	174
75	400.3	0.3	175
76	400.3	0.3	176
77	400.5	0.5	177
78	400.6	0.6	178
79	400.6	0.6	179
80	401.0	1.0	180
81	400.3	0.3	181
82	400.3	0.3	182
83	400.5	0.5	183
84	400.5	0.5	184
85	400.5	0.5	185
86	400.5	0.5	186
87	400.6	0.6	187
88	400.6	0.6	188
89	400.8	0.8	189
90	400.8	0.8	190
91	400.5	0.5	191
92	400.3	0.3	192
93	400.3	0.3	193
94	400.3	0.3	194
95	400.3	0.3	195
96	400.5	0.5	196
97	400.5	0.5	197
98	400.8	0.8	198
99	400.8	0.8	199
100	401.0	1.0	200

400.5	0.5	255	400.3	0.3
400.6	0.6	256	400.3	0.3
400.6	0.6	257	400.5	0.5
400.6	0.6	258	400.6	0.6
400.6	0.6	259	400.6	0.6
400.8	0.8	260	400.8	0.8
400.3	0.3	261	400.3	0.3
400.3	0.3	262	400.3	0.3
400.3	0.3	263	400.3	0.3
400.3	0.3	264	400.3	0.3
400.5	0.5	265	400.3	0.3
400.6	0.6	266	400.3	0.3
400.6	0.6	267	400.5	0.5
400.8	0.8	268	400.6	0.6
400.8	0.8	269	400.8	0.8
401.0	1.0	270	400.8	0.8
399.7	-0.3	271	400.3	0.3
399.9	-0.1	272	400.3	0.3
399.9	-0.1	273	400.3	0.3
400.1	0.1	274	400.3	0.3
400.3	0.3	275	400.5	0.5
400.3	0.3	276	400.5	0.5
400.3	0.3	277	400.5	0.5
400.3	0.3	278	400.6	0.6
400.6	0.6	279	400.6	0.6
400.8	0.8	280	400.8	0.8
400.5	0.5	281	399.6	-0.4
400.3	0.3	282	399.6	-0.4
400.3	0.3	283	399.7	-0.3
400.5	0.5	284	399.9	-0.1
400.5	0.5	285	399.9	-0.1
400.6	0.6	286	400.1	0.1
400.6	0.6	287	400.3	0.3
400.8	0.8	288	400.3	0.3
400.8	0.8	289	400.3	0.3
401.2	1.2	290	400.6	0.6
400.3	0.3	291	399.7	-0.3
400.3	0.3	292	399.7	-0.3
400.3	0.3	293	399.7	-0.3
400.3	0.3	294	399.9	-0.1
400.3	0.3	295	399.9	-0.1
400.3	0.3	296	400.1	0.1
400.5	0.5	297	400.3	0.3
400.6	0.6	298	400.3	0.3
400.6	0.6	299	400.3	0.3
400.8	0.8	300	400.6	0.6

Range for 400°F Signal: **+1.2/-0.4**

Allowable range: ±2.0

Within specification for this temperature? Yes

Performed by: Mike Dey

Mgr. Fire Resistance — Title

3/11/05 — Date

Approved by:

President — Title

3/11/05 — Date

Channel Verification for Yokogawa 300 Channel

Serial No.: 48JF0082

Calibrator Used: T-207318

Temperature Setting (°F): 1000.0

Channel No.	Reading (°F)	+/-	Channel No.	Reading (°F)	+/-	Channel No.	Reading (°F)	+/-
1	999.0	-1.0	101	1000.0	0.0	201	1000.4	0.4
2	999.0	-1.0	102	1000.0	0.0	202	1000.4	0.4
3	999.0	-1.0	103	1000.0	0.0	203	1000.4	0.4
4	999.5	-0.5	104	1000.2	0.2	204	1000.4	0.4
5	999.7	-0.3	105	1000.4	0.4	205	1000.4	0.4
6	999.7	-0.3	106	1000.4	0.4	206	1000.4	0.4
7	999.9	-0.1	107	1000.6	0.6	207	1000.6	0.6
8	1000.0	0.0	108	1000.6	0.6	208	1000.6	0.6
9	1000.2	0.2	109	1000.6	0.6	209	1000.8	0.8
10	1000.6	0.6	110	1000.9	0.9	210	1000.9	0.9
11	999.9	-0.1	111	1000.2	0.2	211	1000.0	0.0
12	999.7	-0.3	112	1000.4	0.4	212	1000.0	0.0
13	999.9	-0.1	113	1000.4	0.4	213	1000.0	0.0
14	999.9	-0.1	114	1000.4	0.4	214	1000.2	0.2
15	999.9	-0.1	115	1000.6	0.6	215	1000.2	0.2
16	999.7	-0.3	116	1000.6	0.6	216	1000.2	0.2
17	999.9	-0.1	117	1000.6	0.6	217	1000.2	0.2
18	999.9	-0.1	118	1000.8	0.8	218	1000.4	0.4
19	1000.0	0.0	119	1000.9	0.9	219	1000.6	0.6
20	1000.0	0.0	120	1000.9	0.9	220	1000.6	0.6
21	999.9	-0.1	121	1000.6	0.6	221	999.9	-0.1
22	999.7	-0.3	122	1000.4	0.4	222	1000.0	0.0
23	999.7	-0.3	123	1000.2	0.2	223	1000.0	0.0
24	999.9	-0.1	124	1000.4	0.4	224	1000.0	0.0
25	999.9	-0.1	125	1000.6	0.6	225	1000.0	0.0
26	999.7	-0.3	126	1000.6	0.6	226	1000.0	0.0
27	999.9	-0.1	127	1000.6	0.6	227	1000.0	0.0
28	999.9	-0.1	128	1000.6	0.6	228	1000.2	0.2
29	1000.0	0.0	129	1000.8	0.8	229	1000.4	0.4
30	1000.0	0.0	130	1000.9	0.9	230	1000.6	0.6
31	1000.0	0.0	131	1000.0	0.0	231	1000.0	0.0
32	1000.0	0.0	132	1000.0	0.0	232	1000.2	0.2
33	1000.2	0.2	133	1000.0	0.0	233	1000.4	0.4
34	1000.4	0.4	134	1000.0	0.0	234	1000.4	0.4
35	1000.4	0.4	135	1000.0	0.0	235	1000.6	0.6
36	1000.4	0.4	136	1000.0	0.0	236	1000.6	0.6
37	1000.6	0.6	137	1000.2	0.2	237	1000.6	0.6
38	1000.6	0.6	138	1000.4	0.4	238	1000.9	0.9
39	1000.6	0.6	139	1000.4	0.4	239	1000.4	0.4
40	1000.9	0.9	140	1000.6	0.6	240	1000.2	0.2
41	1000.0	0.0	141	1000.0	0.0	241	1000.2	0.2
42	999.9	-0.1	142	1000.0	0.0	242	1000.2	0.2
43	1000.0	0.0	143	1000.0	0.0	243	1000.2	0.2
44	1000.0	0.0	144	1000.0	0.0	244	1000.4	0.4
45	1000.0	0.0	145	1000.0	0.0	245	1000.4	0.4
46	1000.0	0.0	146	1000.0	0.0	246	1000.2	0.2
47	1000.0	0.0	147	1000.2	0.2	247	1000.2	0.2
48	1000.2	0.2	148	1000.6	0.6	248	1000.2	0.2
49	1000.6	0.6	149	1000.6	0.6	249	1000.8	0.8
50	1000.6	0.6	150	1000.6	0.6	250	1001.1	1.1
51	999.7	-0.3	151	1000.4	0.4	251	1000.2	0.2
52	999.9	-0.1	152	1000.4	0.4	252	1000.2	0.2
53	1000.0	0.0	153	1000.4	0.4	253	1000.4	0.4
54	1000.0	0.0	154	1000.2	0.2	254	1000.4	0.4
55	1000.0	0.0	155	1000.4	0.4	255	1000.4	0.4
56	1000.2	0.2	156	1000.4	0.4	256	1000.4	0.4

57	1000.2	0.2	157	1000.4	0.4	257	1000.4	0.4			
58	1000.4	0.4	158	1000.6	0.6	258	1000.6	0.6			
59	1000.4	0.4	159	1000.6	0.6	259	1000.6	0.6			
60	1000.6	0.6	160	1000.9	0.9	260	1000.8	0.8			
61	1000.6	0.6	161	1000.4	0.4	261	1000.0	0.0			
62	1000.4	0.4	162	1000.4	0.4	262	1000.0	0.0			
63	1000.4	0.4	163	1000.4	0.4	263	1000.2	0.2			
64	1000.4	0.4	164	1000.6	0.6	264	1000.2	0.2			
65	1000.4	0.4	165	1000.6	0.6	265	1000.4	0.4			
66	1000.6	0.6	166	1000.6	0.6	266	1000.4	0.4			
67	1000.6	0.6	167	1000.6	0.6	267	1000.6	0.6			
68	1000.6	0.6	168	1000.6	0.6	268	1000.6	0.6			
69	1000.9	0.9	169	1000.6	0.6	269	1000.6	0.6			
70	1000.9	0.9	170	1000.9	0.9	270	1000.9	0.9			
71	1000.6	0.6	171	999.9	-0.1	271	1000.0	0.0			
72	1000.4	0.4	172	1000.0	0.0	272	1000.0	0.0			
73	1000.6	0.6	173	1000.0	0.0	273	1000.0	0.0			
74	1000.4	0.4	174	1000.2	0.2	274	1000.0	0.0			
75	1000.8	0.8	175	1000.2	0.2	275	1000.0	0.0			
76	1000.6	0.6	176	1000.4	0.4	276	1000.0	0.0			
77	1000.8	0.8	177	1000.6	0.6	277	1000.2	0.2			
78	1000.8	0.8	178	1000.6	0.6	278	1000.2	0.2			
79	1000.9	0.9	179	1000.6	0.6	279	1000.6	0.6			
80	1000.9	0.9	180	1000.9	0.9	280	1000.8	0.8			
81	1000.4	0.4	181	1000.6	0.6	281	999.7	-0.3			
82	1000.4	0.4	182	1000.6	0.6	282	999.7	-0.3			
83	1000.4	0.4	183	1000.6	0.6	283	999.7	-0.3			
84	1000.4	0.4	184	1000.6	0.6	284	999.9	-0.1			
85	1000.6	0.6	185	1000.6	0.6	285	999.9	-0.1			
86	1000.6	0.6	186	1000.8	0.8	286	999.9	-0.1			
87	1000.6	0.6	187	1000.6	0.6	287	1000.0	0.0			
88	1000.6	0.6	188	1000.8	0.8	288	1000.0	0.0			
89	1000.9	0.9	189	1000.9	0.9	289	1000.0	0.0			
90	1000.9	0.9	190	1001.3	1.3	290	1000.4	0.4			
91	1000.4	0.4	191	1000.6	0.6	291	999.7	-0.3			
92	1000.4	0.4	192	1000.4	0.4	292	999.7	-0.3			
93	1000.6	0.6	193	1000.6	0.6	293	999.9	-0.1			
94	1000.6	0.6	194	1000.6	0.6	294	1000.0	0.0			
95	1000.6	0.6	195	1000.6	0.6	295	1000.0	0.0			
96	1000.6	0.6	196	1000.6	0.6	296	1000.0	0.0			
97	1000.6	0.6	197	1000.8	0.8	297	1000.0	0.0			
98	1000.6	0.6	198	1000.9	0.9	298	1000.2	0.2			
99	1000.6	0.6	199	1000.9	0.9	299	1000.0	0.0			
100	1000.9	0.9	200	1001.1	1.1	300	1000.4	0.4			

Range for 1000°F Signal: +1.3/-1

Allowable range: ±2.3

Within specification for this temperature? Yes

Performed by: Mike Day MD

Mgr. Fire Resistance — 3/11/05

Title — Date

Approved by:

President — 3/11/05

Title — Date

Channel Verification for Yokogawa 300 Channel

Serial No.: 48JF0082

Calibrator Used: T-207318

Temperature Setting (°F): 2000.0

Channel No.	Reading (°F)	+/-	Channel No.	Reading (°F)	+/-	Channel No.	Reading (°F)	+/-
1	1999.8	-0.2	101	2000.7	0.7	201	2000.7	0.7
2	1999.8	-0.2	102	2000.7	0.7	202	2000.7	0.7
3	1999.6	-0.4	103	2000.7	0.7	203	2000.7	0.7
4	1999.6	-0.4	104	2000.7	0.7	204	2000.7	0.7
5	1999.6	-0.4	105	2000.7	0.7	205	2000.8	0.8
6	1999.8	-0.2	106	2000.7	0.7	206	2001.0	1.0
7	1999.8	-0.2	107	2000.8	0.8	207	2001.0	1.0
8	1999.8	-0.2	108	2000.8	0.8	208	2001.0	1.0
9	1999.9	-0.1	109	2001.0	1.0	209	2001.4	1.4
10	2000.3	0.3	110	2001.0	1.0	210	2001.4	1.4
11	1999.6	-0.4	111	2000.7	0.7	211	2000.7	0.7
12	1999.6	-0.4	112	2000.7	0.7	212	2000.7	0.7
13	1999.4	-0.6	113	2000.7	0.7	213	2000.7	0.7
14	1999.8	-0.2	114	2000.8	0.8	214	2000.7	0.7
15	1999.8	-0.2	115	2000.8	0.8	215	2000.7	0.7
16	1999.8	-0.2	116	2001.0	1.0	216	2000.7	0.7
17	1999.8	-0.2	117	2001.0	1.0	217	2000.7	0.7
18	1999.8	-0.2	118	2001.2	1.2	218	2000.7	0.7
19	1999.8	-0.2	119	2001.4	1.4	219	2000.8	0.8
20	1999.9	-0.1	120	2001.6	1.6	220	2001.0	1.0
21	1999.4	-0.6	121	2000.7	0.7	221	2000.3	0.3
22	1999.4	-0.6	122	2000.7	0.7	222	2000.3	0.3
23	1999.4	-0.6	123	2000.5	0.5	223	2000.5	0.5
24	1999.6	-0.4	124	2000.7	0.7	224	2000.5	0.5
25	1999.8	-0.2	125	2000.7	0.7	225	2000.5	0.5
26	1999.8	-0.2	126	2000.7	0.7	226	2000.5	0.5
27	1999.8	-0.2	127	2000.8	0.8	227	2000.7	0.7
28	1999.9	-0.1	128	2001.0	1.0	228	2000.7	0.7
29	1999.4	-0.6	129	2001.0	1.0	229	2000.8	0.8
30	1999.4	-0.6	130	2001.4	1.4	230	2001.0	1.0
31	2000.5	0.5	131	2000.5	0.5	231	2000.7	0.7
32	2000.5	0.5	132	2000.3	0.3	232	2000.7	0.7
33	2000.5	0.5	133	2000.3	0.3	233	2000.8	0.8
34	2000.3	0.3	134	2000.3	0.3	234	2000.8	0.8
35	2000.5	0.5	135	2000.3	0.3	235	2000.8	0.8
36	2000.5	0.5	136	2000.3	0.3	236	2001.0	1.0
37	2000.7	0.7	137	2000.3	0.3	237	2001.0	1.0
38	2000.7	0.7	138	2000.5	0.5	238	2001.0	1.0
39	2000.7	0.7	139	2000.7	0.7	239	2001.0	1.0
40	2001.0	1.0	140	2000.8	0.8	240	2001.4	1.4
41	2000.1	0.1	141	2000.1	0.1	241	2000.7	0.7
42	2000.3	0.3	142	2000.1	0.1	242	2000.7	0.7
43	2000.1	0.1	143	2000.3	0.3	243	2000.3	0.3
44	2000.5	0.5	144	2000.5	0.5	244	2000.5	0.5
45	2000.5	0.5	145	2000.5	0.5	245	2000.7	0.7
46	2000.5	0.5	146	2000.5	0.5	246	2000.7	0.7
47	2000.5	0.5	147	2000.5	0.5	247	2000.7	0.7
48	2000.5	0.5	148	2000.7	0.7	248	2000.8	0.8
49	2000.5	0.5	149	2000.7	0.7	249	2001.0	1.0
50	2000.7	0.7	150	2001.0	1.0	250	2001.2	1.2
51	1999.9	-0.1	151	2000.5	0.5	251	2000.1	0.1
52	1999.9	-0.1	152	2000.5	0.5	252	1999.9	-0.1
53	1999.9	-0.1	153	2000.3	0.3	253	1999.9	-0.1
54	1999.9	-0.1	154	2000.5	0.5	254	2000.1	0.1
55	2000.1	0.1	155	2000.7	0.7	255	2000.1	0.1
56	2000.3	0.3	156	2000.7	0.7	256	2000.3	0.3

57	2000.5	0.5	157	2000.7	0.7	257	2000.3	0.3
58	2000.7	0.7	158	2000.7	0.7	258	2000.7	0.7
59	2000.7	0.7	159	2001.0	1.0	259	2000.7	0.7
60	2000.8	0.8	160	2001.2	1.2	260	2000.8	0.8
61	2000.8	0.8	161	2000.7	0.7	261	2000.1	0.1
62	2000.7	0.7	162	2000.7	0.7	262	2000.1	0.1
63	2000.7	0.7	163	2000.7	0.7	263	2000.1	0.1
64	2000.7	0.7	164	2000.7	0.7	264	2000.1	0.1
65	2000.7	0.7	165	2000.7	0.7	265	2000.1	0.1
66	2000.7	0.7	166	2000.7	0.7	266	2000.3	0.3
67	2000.8	0.8	167	2000.7	0.7	267	2000.3	0.3
68	2001.0	1.0	168	2000.8	0.8	268	2000.5	0.5
69	2001.0	1.0	169	2001.0	1.0	269	2000.7	0.7
70	2001.4	1.4	170	2001.2	1.2	270	2001.0	1.0
71	2000.7	0.7	171	2000.1	0.1	271	1999.9	-0.1
72	2000.8	0.8	172	2000.1	0.1	272	1999.9	-0.1
73	2000.8	0.8	173	2000.3	0.3	273	1999.9	-0.1
74	2001.0	1.0	174	2000.3	0.3	274	1999.9	-0.1
75	2000.8	0.8	175	2000.5	0.5	275	1999.9	-0.1
76	2001.0	1.0	176	2000.5	0.5	276	2000.1	0.1
77	2000.8	0.8	177	2000.5	0.5	277	1999.9	-0.1
78	2001.0	1.0	178	2000.7	0.7	278	2000.1	0.1
79	2001.0	1.0	179	2000.8	0.8	279	2000.3	0.3
80	2001.4	1.4	180	2001.0	1.0	280	2000.7	0.7
81	2000.7	0.7	181	2001.2	1.2	281	1999.2	-0.8
82	2000.7	0.7	182	2001.0	1.0	282	1999.2	-0.8
83	2000.8	0.8	183	2001.0	1.0	283	1999.4	-0.6
84	2000.8	0.8	184	2001.2	1.2	284	1999.4	-0.6
85	2000.8	0.8	185	2001.2	1.2	285	1999.6	-0.4
86	2001.0	1.0	186	2001.2	1.2	286	1999.6	-0.4
87	2001.0	1.0	187	2001.4	1.4	287	1999.6	-0.4
88	2000.8	0.8	188	2001.4	1.4	288	1999.6	-0.4
89	2001.0	1.0	189	2001.6	1.6	289	1999.9	-0.1
90	2001.2	1.2	190	2001.7	1.7	290	1999.9	-0.1
91	2000.7	0.7	191	2001.0	1.0	291	1999.2	-0.8
92	2000.7	0.7	192	2001.0	1.0	292	1999.2	-0.8
93	2000.7	0.7	193	2001.0	1.0	293	1999.2	-0.8
94	2000.7	0.7	194	2001.0	1.0	294	1999.4	-0.6
95	2000.7	0.7	195	2001.0	1.0	295	1999.6	-0.4
96	2000.7	0.7	196	2001.2	1.2	296	1999.6	-0.4
97	2000.8	0.8	197	2001.4	1.4	297	1999.8	-0.2
98	2001.0	1.0	198	2001.4	1.4	298	1999.9	-0.1
99	2001.0	1.0	199	2001.4	1.4	299	1999.9	-0.1
100	2001.4	1.4	200	2001.6	1.6	300	2000.3	0.3

Range for 2000°F Signal: **+1.7/-0.8**

Allowable range: ±2.8

Within specification for this temperature? Yes

Performed by: Mike Day MD

Mgr. Fire Resistance — Title

3/11/05 — Date

Approved by:

President — Title

3/11/05 — Date

Omega Point Laboratories, Inc.
16015 Shady Falls Road
Elmendorf, Texas 78112
800-966-5253 FAX 210-635-8101

Certificate of Verification

Certification No.: 92145

Verification Date: 03/11/2005

Reverification Date: 09/11/2005

Manufacturer: Yokogawa

Model No.: 100 Channel DAU

Serial No.: 99LE004

Equipment Description: 100 Channel Data Acquisition System with YOKOGAWA Darwin Series

Verification Sources: TEGAM Model 840-A, SN: T-207318. Calibration due 05/03/2005

PERFORMANCE:

Temperature: (75°F) +1.3/-0.2	Temperature: (150°F) +1.3/-0.1	Temperature: (300°F) +1.3/-0.3	Temperature: (400°F) +1/-0.3	Temperature: (1000°F) ++1.1/-0.3	Temperature: (2000°F) +1.2/-0.2

Verification Performed by:

Mike Dey
Manager of Fire Resistance

Verification Approved by:

Deg Priest
President/Chief Technical Officer

Channel Verification for Yokogawa 100 Channel

Serial No.: 99-LE-004

Calibrator Used: T-207318

Temperature Setting (°F): 75.0

Within specs? Yes/No

Performed by: Mike Dey MD

Title: Mgr. Dept. 2

Approved by: DP

Title: President

Date: 3/11/05

Channel No.	Reading (°F)	+/-	Channel No.	Reading (°F)	+/-
1	75.7	0.7	51	75.0	0.0
2	75.7	0.7	52	75.2	0.2
3	75.7	0.7	53	75.0	0.0
4	75.7	0.7	54	75.0	0.0
5	75.7	0.7	55	75.2	0.2
6	75.9	0.9	56	75.2	0.2
7	75.7	0.7	57	75.2	0.2
8	75.7	0.7	58	75.2	0.2
9	75.9	0.9	59	75.4	0.4
10	76.3	1.3	60	75.4	0.4
11	75.6	0.6	61	75.7	0.7
12	75.4	0.4	62	75.4	0.4
13	75.4	0.4	63	75.4	0.4
14	75.2	0.2	64	75.4	0.4
15	75.4	0.4	65	75.4	0.4
16	75.6	0.6	66	75.4	0.4
17	75.2	0.2	67	75.6	0.6
18	75.4	0.4	68	75.6	0.6
19	75.7	0.7	69	75.7	0.7
20	75.9	0.9	70	76.1	1.1
21	75.7	0.7	71	75.4	0.4
22	75.6	0.6	72	75.2	0.2
23	75.4	0.4	73	75.2	0.2
24	75.6	0.6	74	75.2	0.2
25	75.6	0.6	75	75.2	0.2
26	75.6	0.6	76	75.2	0.2
27	75.7	0.7	77	75.4	0.4
28	75.7	0.7	78	75.4	0.4
29	75.7	0.7	79	75.4	0.4
30	76.1	1.1	80	75.7	0.7
31	75.6	0.6	81	75.4	0.4
32	75.6	0.6	82	75.2	0.2
33	75.4	0.4	83	75.2	0.2
34	75.4	0.4	84	75.2	0.2
35	75.6	0.6	85	75.2	0.2
36	75.4	0.4	86	75.4	0.4
37	75.4	0.4	87	75.4	0.4
38	75.6	0.6	88	75.6	0.6
39	75.7	0.7	89	75.6	0.6
40	75.7	0.7	90	75.7	0.7
41	75.6	0.6	91	74.8	-0.2
42	75.4	0.4	92	75.0	0.0
43	75.2	0.2	93	74.8	-0.2
44	75.2	0.2	94	74.8	-0.2
45	75.4	0.4	95	75.2	0.2
46	75.4	0.4	96	75.0	0.0
47	75.4	0.4	97	75.2	0.2
48	75.6	0.6	98	75.2	0.2
49	75.7	0.7	99	75.2	0.2
50	75.7	0.7	100	75.2	0.2

Range of 75°F Readings: +1.3/-0.2

	Lower	Upper	
Allowable limits	73.2	76.8	(±1.8)

Channel Verification for Yokogawa 100 Channel

Serial No.: 99-LE-004

Calibrator Used: T-207318

Temperature Setting (°F): 150.0

Within specs? (Yes)/No

Performed by: Mike Dey MD

Title: Mgr. Dept. 2

Approved by: DP

Title: President

Date: 3/11/05

Channel No.	Reading (°F)	+/-	Channel No.	Reading (°F)	+/-
1	151.0	1.0	51	150.1	0.1
2	150.8	0.8	52	149.9	-0.1
3	150.8	0.8	53	149.9	-0.1
4	150.8	0.8	54	150.1	0.1
5	150.8	0.8	55	150.1	0.1
6	150.8	0.8	56	150.1	0.1
7	150.8	0.8	57	150.1	0.1
8	151.0	1.0	58	150.3	0.3
9	151.0	1.0	59	150.3	0.3
10	151.3	1.3	60	150.4	0.4
11	150.6	0.6	61	150.6	0.6
12	150.3	0.3	62	150.3	0.3
13	150.3	0.3	63	150.3	0.3
14	150.3	0.3	64	150.3	0.3
15	150.3	0.3	65	150.3	0.3
16	150.3	0.3	66	150.4	0.4
17	150.4	0.4	67	150.6	0.6
18	150.4	0.4	68	150.4	0.4
19	150.6	0.6	69	150.6	0.6
20	150.8	0.8	70	150.8	0.8
21	150.6	0.6	71	150.3	0.3
22	150.4	0.4	72	149.9	-0.1
23	150.3	0.3	73	149.9	-0.1
24	150.4	0.4	74	150.1	0.1
25	150.4	0.4	75	150.1	0.1
26	150.4	0.4	76	150.1	0.1
27	150.6	0.6	77	150.3	0.3
28	150.6	0.6	78	150.3	0.3
29	150.8	0.8	79	150.3	0.3
30	151.0	1.0	80	150.6	0.6
31	150.8	0.8	81	150.3	0.3
32	150.4	0.4	82	150.3	0.3
33	150.3	0.3	83	150.3	0.3
34	150.4	0.4	84	150.3	0.3
35	150.4	0.4	85	150.3	0.3
36	150.3	0.3	86	150.3	0.3
37	150.3	0.3	87	150.4	0.4
38	150.4	0.4	88	150.4	0.4
39	150.6	0.6	89	150.6	0.6
40	150.8	0.8	90	150.8	0.8
41	150.6	0.6	91	150.1	0.1
42	150.3	0.3	92	149.9	-0.1
43	150.3	0.3	93	149.9	-0.1
44	150.4	0.4	94	150.1	0.1
45	150.4	0.4	95	150.3	0.3
46	150.4	0.4	96	150.1	0.1
47	150.6	0.6	97	150.3	0.3
48	150.6	0.6	98	150.3	0.3
49	150.6	0.6	99	150.3	0.3
50	151.0	1.0	100	150.6	0.6

Range of 150°F Readings: +1.3/-0.1

	Lower	Upper	
Allowable limits	148.2	151.8	(±1.8)

Channel Verification for Yokogawa 100 Channel

Serial No.: 99-LE-004

Calibrator Used: T-207318

Temperature Setting (°F): 300.0

Within specs? (Yes)/No

Performed by: Mike Dey MD

Title: Mgr. Dept. 2

Approved by: JP

Title: President

Date: 3/11/05

Channel No.	Reading (°F)	+/-	Channel No.	Reading (°F)	+/-
1	300.7	0.7	51	299.8	-0.2
2	300.7	0.7	52	299.7	-0.3
3	300.7	0.7	53	299.8	-0.2
4	300.7	0.7	54	299.8	-0.2
5	300.7	0.7	55	299.8	-0.2
6	300.7	0.7	56	300.0	0.0
7	300.7	0.7	57	300.0	0.0
8	300.7	0.7	58	300.0	0.0
9	301.1	1.1	59	300.2	0.2
10	301.3	1.3	60	300.4	0.4
11	300.6	0.6	61	300.4	0.4
12	300.4	0.4	62	300.2	0.2
13	300.4	0.4	63	300.2	0.2
14	300.6	0.6	64	300.2	0.2
15	300.4	0.4	65	300.2	0.2
16	300.4	0.4	66	300.2	0.2
17	300.4	0.4	67	300.2	0.2
18	300.6	0.6	68	300.4	0.4
19	300.6	0.6	69	300.6	0.6
20	300.9	0.9	70	300.7	0.7
21	300.4	0.4	71	300.2	0.2
22	300.2	0.2	72	300.2	0.2
23	300.4	0.4	73	300.0	0.0
24	300.2	0.2	74	300.0	0.0
25	300.4	0.4	75	300.2	0.2
26	300.4	0.4	76	300.2	0.2
27	300.4	0.4	77	300.0	0.0
28	300.6	0.6	78	300.2	0.2
29	300.7	0.7	79	300.2	0.2
30	300.9	0.9	80	300.4	0.4
31	300.6	0.6	81	300.2	0.2
32	300.4	0.4	82	300.2	0.2
33	300.4	0.4	83	300.2	0.2
34	300.4	0.4	84	300.2	0.2
35	300.2	0.2	85	300.2	0.2
36	300.4	0.4	86	300.2	0.2
37	300.4	0.4	87	300.2	0.2
38	300.4	0.4	88	300.2	0.2
39	300.6	0.6	89	300.4	0.4
40	300.7	0.7	90	300.7	0.7
41	300.4	0.4	91	299.8	-0.2
42	300.2	0.2	92	299.8	-0.2
43	300.2	0.2	93	299.8	-0.2
44	300.4	0.4	94	299.8	-0.2
45	300.4	0.4	95	299.8	-0.2
46	300.4	0.4	96	300.0	0.0
47	300.6	0.6	97	300.0	0.0
48	300.4	0.4	98	300.0	0.0
49	300.6	0.6	99	300.2	0.2
50	300.7	0.7	100	300.4	0.4

Range of 300°F Readings: +1.3/-0.3

	Lower	Upper	
Allowable limits	298.1	301.9	(±1.9)

Channel Verification for Yokogawa 100 Channel

Serial No.: 99-LE-004

Calibrator Used: T-207318

Temperature Setting (°F): 400.0

Within specs? (Yes)/No

Performed by: Mike Dey MD

Title: Mgr. Dept. 2

Approved by: for

Title: President

Date: 3/11/05

Channel No.	Reading (°F)	+/-	Channel No.	Reading (°F)	+/-
1	400.8	0.8	51	399.7	-0.3
2	400.8	0.8	52	399.7	-0.3
3	400.6	0.6	53	399.7	-0.3
4	400.8	0.8	54	399.7	-0.3
5	400.8	0.8	55	399.9	-0.1
6	400.6	0.6	56	399.9	-0.1
7	400.8	0.8	57	399.9	-0.1
8	400.8	0.8	58	400.1	0.1
9	400.8	0.8	59	400.3	0.3
10	401.0	1.0	60	400.3	0.3
11	400.5	0.5	61	400.6	0.6
12	400.3	0.3	62	400.3	0.3
13	400.3	0.3	63	400.3	0.3
14	400.3	0.3	64	400.3	0.3
15	400.3	0.3	65	400.3	0.3
16	400.3	0.3	66	400.3	0.3
17	400.3	0.3	67	400.3	0.3
18	400.5	0.5	68	400.3	0.3
19	400.5	0.5	69	400.5	0.5
20	400.8	0.8	70	400.8	0.8
21	400.3	0.3	71	400.3	0.3
22	400.3	0.3	72	399.9	-0.1
23	400.1	0.1	73	399.9	-0.1
24	400.3	0.3	74	400.1	0.1
25	400.3	0.3	75	400.1	0.1
26	400.3	0.3	76	400.1	0.1
27	400.3	0.3	77	400.3	0.3
28	400.5	0.5	78	400.1	0.1
29	400.5	0.5	79	400.3	0.3
30	400.8	0.8	80	400.6	0.6
31	400.5	0.5	81	400.3	0.3
32	400.5	0.5	82	400.3	0.3
33	400.3	0.3	83	400.3	0.3
34	400.3	0.3	84	400.1	0.1
35	400.5	0.5	85	400.3	0.3
36	400.3	0.3	86	400.3	0.3
37	400.3	0.3	87	400.3	0.3
38	400.5	0.5	88	400.3	0.3
39	400.6	0.6	89	400.5	0.5
40	400.8	0.8	90	400.8	0.8
41	400.3	0.3	91	399.9	-0.1
42	400.3	0.3	92	399.9	-0.1
43	400.3	0.3	93	399.7	-0.3
44	400.3	0.3	94	399.9	-0.1
45	400.3	0.3	95	400.1	0.1
46	400.3	0.3	96	399.9	-0.1
47	400.3	0.3	97	400.1	0.1
48	400.5	0.5	98	400.3	0.3
49	400.6	0.6	99	400.3	0.3
50	400.6	0.6	100	400.3	0.3

Range of 400°F Readings: +1/-0.3

	Lower	Upper	
Allowable limits	398.0	402.0	(±2.0)

Channel Verification for Yokogawa 100 Channel

Serial No.: 99-LE-004

Within specs? (Yes)/No

Calibrator Used: T-207318

Performed by: Mike Dey MD

Title: Mgr. Dept. 2

Temperature Setting (°F): 1000.0

Approved by: DP

Title: President

Date: 3/11/05

Channel No.	Reading (°F)	+/-	Channel No.	Reading (°F)	+/-
1	1000.9	0.9	51	999.9	-0.1
2	1000.8	0.8	52	999.9	-0.1
3	1000.6	0.6	53	999.7	-0.3
4	1000.8	0.8	54	999.9	-0.1
5	1000.8	0.8	55	999.9	-0.1
6	1000.6	0.6	56	999.9	-0.1
7	1000.9	0.9	57	1000.0	0.0
8	1000.9	0.9	58	1000.0	0.0
9	1000.9	0.9	59	1000.0	0.0
10	1001.1	1.1	60	1000.2	0.2
11	1000.6	0.6	61	1000.6	0.6
12	1000.2	0.2	62	1000.2	0.2
13	1000.2	0.2	63	1000.2	0.2
14	1000.4	0.4	64	1000.2	0.2
15	1000.2	0.2	65	1000.0	0.0
16	1000.2	0.2	66	1000.2	0.2
17	1000.4	0.4	67	1000.4	0.4
18	1000.4	0.4	68	1000.4	0.4
19	1000.6	0.6	69	1000.6	0.6
20	1000.8	0.8	70	1000.8	0.8
21	1000.6	0.6	71	1000.0	0.0
22	1000.2	0.2	72	1000.0	0.0
23	1000.4	0.4	73	1000.0	0.0
24	1000.6	0.6	74	1000.0	0.0
25	1000.4	0.4	75	1000.0	0.0
26	1000.6	0.6	76	1000.0	0.0
27	1000.6	0.6	77	1000.0	0.0
28	1000.6	0.6	78	1000.0	0.0
29	1000.6	0.6	79	1000.2	0.2
30	1000.9	0.9	80	1000.6	0.6
31	1000.6	0.6	81	1000.0	0.0
32	1000.2	0.2	82	1000.0	0.0
33	1000.4	0.4	83	1000.0	0.0
34	1000.4	0.4	84	1000.0	0.0
35	1000.2	0.2	85	1000.0	0.0
36	1000.2	0.2	86	1000.0	0.0
37	1000.4	0.4	87	1000.2	0.2
38	1000.2	0.2	88	1000.2	0.2
39	1000.4	0.4	89	1000.2	0.2
40	1000.8	0.8	90	1000.6	0.6
41	1000.2	0.2	91	1000.0	0.0
42	1000.0	0.0	92	999.7	-0.3
43	1000.0	0.0	93	999.7	-0.3
44	1000.0	0.0	94	1000.0	0.0
45	1000.0	0.0	95	1000.0	0.0
46	1000.0	0.0	96	1000.0	0.0
47	1000.2	0.2	97	1000.0	0.0
48	1000.2	0.2	98	1000.0	0.0
49	1000.2	0.2	99	1000.2	0.2
50	1000.6	0.6	100	1000.4	0.4

Range of 2000°F Readings: +1.1/-0.3

	Lower	Upper	
Allowable limits	997.7	1002.3	(±2.3)

Channel Verification for Yokogawa 100 Channel

Serial No.: 99-LE-004

Within specs? (Yes)/No

Calibrator Used: T-207318

Performed by: Mike Dey MD

Title: Mgr. Dept. 2

Temperature Setting (°F): 2000.0

Approved by: JP

Title: President

Date: 3/11/05

Channel No.	Reading (°F)	+/-	Channel No.	Reading (°F)	+/-
1	2000.8	0.8	51	1999.9	-0.1
2	2000.8	0.8	52	1999.9	-0.1
3	2000.8	0.8	53	1999.9	-0.1
4	2000.7	0.7	54	1999.9	-0.1
5	2000.8	0.8	55	1999.9	-0.1
6	2000.8	0.8	56	1999.9	-0.1
7	2000.7	0.7	57	1999.9	-0.1
8	2000.8	0.8	58	2000.1	0.1
9	2001.0	1.0	59	2000.1	0.1
10	2001.2	1.2	60	2000.3	0.3
11	2000.7	0.7	61	2000.7	0.7
12	2000.5	0.5	62	2000.3	0.3
13	2000.5	0.5	63	2000.3	0.3
14	2000.3	0.3	64	2000.3	0.3
15	2000.5	0.5	65	2000.3	0.3
16	2000.7	0.7	66	2000.3	0.3
17	2000.5	0.5	67	2000.3	0.3
18	2000.7	0.7	68	2000.5	0.5
19	2000.7	0.7	69	2000.5	0.5
20	2000.8	0.8	70	2001.0	1.0
21	2000.7	0.7	71	2000.7	0.7
22	2000.7	0.7	72	2000.5	0.5
23	2000.7	0.7	73	2000.3	0.3
24	2000.7	0.7	74	2000.5	0.5
25	2000.7	0.7	75	2000.5	0.5
26	2000.7	0.7	76	2000.5	0.5
27	2000.7	0.7	77	2000.5	0.5
28	2000.7	0.7	78	2000.7	0.7
29	2001.0	1.0	79	2000.7	0.7
30	2001.0	1.0	80	2000.8	0.8
31	2000.5	0.5	81	1999.9	-0.1
32	2000.3	0.3	82	1999.8	-0.2
33	2000.3	0.3	83	1999.8	-0.2
34	2000.3	0.3	84	1999.8	-0.2
35	2000.5	0.5	85	1999.9	-0.1
36	2000.5	0.5	86	1999.9	-0.1
37	2000.3	0.3	87	1999.9	-0.1
38	2000.3	0.3	88	1999.9	-0.1
39	2000.7	0.7	89	2000.1	0.1
40	2000.7	0.7	90	2000.3	0.3
41	2000.3	0.3	91	1999.9	-0.1
42	2000.1	0.1	92	1999.9	-0.1
43	2000.1	0.1	93	1999.9	-0.1
44	1999.9	-0.1	94	1999.9	-0.1
45	2000.1	0.1	95	1999.9	-0.1
46	2000.3	0.3	96	2000.1	0.1
47	2000.3	0.3	97	2000.1	0.1
48	2000.3	0.3	98	2000.3	0.3
49	2000.5	0.5	99	2000.5	0.5
50	2000.7	0.7	100	2000.7	0.7

Range of 2000°F Readings: +1.2/-0.2

	Lower	Upper	
Allowable limits	1997.2	2002.8	(±2.8)

Omega Point Laboratories, Inc.
16015 Shady Falls Road
Elmendorf, Texas 78112
800-966-5253 FAX 210-635-8101

Certificate of Verification

Certification No.:	92146
Verification Date:	03/11/2005
Reverification Date:	09/11/2005
Manufacturer:	Yokogawa
Model No.:	100 Channel DAU
Serial No.:	99LE006
Equipment Description:	100 Channel Data Acquisition System with YOKOGAWA Darwin Series
Calibration Sources:	TEGAM Model 840-A, SN: T-207318. Calibration due 05/03/2005.

PERFORMANCE:

Temperature: (75°F) +1.6/-0	Temperature: (150°F) +1.3/-0.3	Temperature: (300°F) +1.3/-0.3	Temperature: (400°F) +1.4/-0.3	Temperature: (1000°F) +1.3/-0.3	Temperature: (2000°F) +1.7/-0.6

Verification Performed by:

Mike Dey
Manager of Fire Resistance

Verification Approved by:

Deg Priest
President/Chief Technical Officer

Channel Verification for Yokogawa 100 Channel

Serial No.: 99-LE-006

Calibrator Used: T-207318

Temperature Setting (°F): 75.0

Within specs? Yes/No

Performed by: Mike Dey MD

Title: Mgr. Dept. 2

Approved by: DP

Title:

Date: 3/11/05

Channel No.	Reading (°F)	+/-	Channel No.	Reading (°F)	+/-
1	76.5	1.5	51	75.2	0.2
2	76.3	1.3	52	75.6	0.6
3	76.6	1.6	53	75.6	0.6
4	75.9	0.9	54	75.0	0.0
5	75.7	0.7	55	75.0	0.0
6	75.7	0.7	56	75.0	0.0
7	75.7	0.7	57	75.0	0.0
8	75.7	0.7	58	75.0	0.0
9	75.9	0.9	59	75.0	0.0
10	76.3	1.3	60	75.2	0.2
11	75.7	0.7	61	75.7	0.7
12	76.3	1.3	62	75.9	0.9
13	76.5	1.5	63	75.9	0.9
14	75.7	0.7	64	75.6	0.6
15	75.7	0.7	65	75.6	0.6
16	75.6	0.6	66	75.6	0.6
17	75.6	0.6	67	75.6	0.6
18	75.6	0.6	68	75.6	0.6
19	75.7	0.7	69	75.7	0.7
20	75.9	0.9	70	75.9	0.9
21	75.9	0.9	71	75.7	0.7
22	75.7	0.7	72	76.3	1.3
23	76.1	1.1	73	76.1	1.1
24	75.7	0.7	74	75.4	0.4
25	75.4	0.4	75	75.6	0.6
26	75.4	0.4	76	75.4	0.4
27	75.6	0.6	77	75.6	0.6
28	75.6	0.6	78	75.6	0.6
29	75.7	0.7	79	75.4	0.4
30	75.7	0.7	80	75.7	0.7
31	75.7	0.7	81	75.2	0.2
32	76.3	1.3	82	75.6	0.6
33	76.3	1.3	83	75.6	0.6
34	75.6	0.6	84	75.2	0.2
35	75.4	0.4	85	75.2	0.2
36	75.4	0.4	86	75.2	0.2
37	75.4	0.4	87	75.2	0.2
38	75.4	0.4	88	75.2	0.2
39	75.6	0.6	89	75.2	0.2
40	75.7	0.7	90	75.6	0.6
41	75.9	0.9	91	75.4	0.4
42	76.5	1.5	92	75.7	0.7
43	76.5	1.5	93	75.7	0.7
44	75.7	0.7	94	75.4	0.4
45	75.7	0.7	95	75.7	0.7
46	75.7	0.7	96	75.6	0.6
47	75.7	0.7	97	75.7	0.7
48	75.6	0.6	98	75.7	0.7
49	75.7	0.7	99	75.7	0.7
50	76.1	1.1	100	75.7	0.7

Range of 75°F Readings: +1.6/0

	Lower	Upper	
Allowable limits	73.2	76.8	(±1.8)

Channel Verification for Yokogawa 100 Channel

Serial No.: 99-LE-006

Calibrator Used: T-207318

Temperature Setting (°F): 150.0

Within specs? Yes/No

Performed by: Mike Dey MD

Title: Mgr. Dept. 2

Approved by:

Title:

Date: 3/11/05

Channel No.	Reading (°F)	+/-	Channel No.	Reading (°F)	+/-
1	151.3	1.3	51	150.1	0.1
2	151.3	1.3	52	150.3	0.3
3	151.3	1.3	53	150.3	0.3
4	150.6	0.6	54	149.9	-0.1
5	150.6	0.6	55	149.9	-0.1
6	150.6	0.6	56	149.7	-0.3
7	150.6	0.6	57	149.7	-0.3
8	150.8	0.8	58	149.9	-0.1
9	150.8	0.8	59	149.9	-0.1
10	151.0	1.0	60	150.1	0.1
11	151.0	1.0	61	150.8	0.8
12	151.3	1.3	62	150.8	0.8
13	151.3	1.3	63	150.8	0.8
14	150.8	0.8	64	150.4	0.4
15	150.8	0.8	65	150.4	0.4
16	150.6	0.6	66	150.4	0.4
17	150.6	0.6	67	150.4	0.4
18	150.8	0.8	68	150.4	0.4
19	150.8	0.8	69	150.4	0.4
20	151.0	1.0	70	150.8	0.8
21	150.6	0.6	71	150.8	0.8
22	151.0	1.0	72	151.0	1.0
23	151.0	1.0	73	151.0	1.0
24	150.3	0.3	74	150.6	0.6
25	150.4	0.4	75	150.4	0.4
26	150.4	0.4	76	150.6	0.6
27	150.3	0.3	77	150.4	0.4
28	150.4	0.4	78	150.6	0.6
29	150.6	0.6	79	150.4	0.4
30	150.8	0.8	80	150.8	0.8
31	150.6	0.6	81	150.3	0.3
32	151.0	1.0	82	150.4	0.4
33	151.0	1.0	83	150.3	0.3
34	150.4	0.4	84	150.1	0.1
35	150.3	0.3	85	150.1	0.1
36	150.4	0.4	86	150.1	0.1
37	150.3	0.3	87	150.1	0.1
38	150.3	0.3	88	150.3	0.3
39	150.6	0.6	89	150.3	0.3
40	150.6	0.6	90	150.4	0.4
41	150.8	0.8	91	150.4	0.4
42	151.3	1.3	92	150.4	0.4
43	151.3	1.3	93	150.6	0.6
44	150.6	0.6	94	150.4	0.4
45	150.6	0.6	95	150.4	0.4
46	150.4	0.4	96	150.4	0.4
47	150.4	0.4	97	150.6	0.6
48	150.6	0.6	98	150.6	0.6
49	150.6	0.6	99	150.6	0.6
50	150.8	0.8	100	150.8	0.8

Range of 150°F Readings: +1.3/-0.3

Allowable limits	Lower	Upper	
	148.2	151.8	(±1.8)

Channel Verification for Yokogawa 100 Channel

Serial No.: 99-LE-006

Calibrator Used: T-207318

Temperature Setting (°F): 300.0

Within specs? Yes/No

Performed by: Mike Dey MD

Title: Mgr. Dept. 2

Approved by: DP

Title:

Date: 3/11/05

Channel No.	Reading (°F)	+/-	Channel No.	Reading (°F)	+/-
1	301.1	1.1	51	300.0	0.0
2	301.3	1.3	52	300.2	0.2
3	301.3	1.3	53	300.2	0.2
4	300.7	0.7	54	299.7	-0.3
5	300.2	0.2	55	299.7	-0.3
6	300.2	0.2	56	299.8	-0.2
7	300.6	0.6	57	299.7	-0.3
8	300.6	0.6	58	299.8	-0.2
9	300.6	0.6	59	300.0	0.0
10	300.9	0.9	60	300.0	0.0
11	300.7	0.7	61	300.6	0.6
12	301.1	1.1	62	300.7	0.7
13	301.3	1.3	63	300.7	0.7
14	300.6	0.6	64	300.4	0.4
15	300.4	0.4	65	300.2	0.2
16	300.4	0.4	66	300.4	0.4
17	300.2	0.2	67	300.2	0.2
18	300.4	0.4	68	300.6	0.6
19	300.4	0.4	69	300.6	0.6
20	300.7	0.7	70	300.7	0.7
21	300.4	0.4	71	300.6	0.6
22	300.9	0.9	72	301.1	1.1
23	300.7	0.7	73	300.9	0.9
24	300.2	0.2	74	300.2	0.2
25	300.2	0.2	75	300.4	0.4
26	300.2	0.2	76	300.2	0.2
27	300.2	0.2	77	300.2	0.2
28	300.2	0.2	78	300.4	0.4
29	300.2	0.2	79	300.4	0.4
30	300.6	0.6	80	300.6	0.6
31	300.7	0.7	81	300.0	0.0
32	300.9	0.9	82	300.2	0.2
33	300.9	0.9	83	300.2	0.2
34	300.4	0.4	84	300.0	0.0
35	300.2	0.2	85	300.0	0.0
36	300.2	0.2	86	299.8	-0.2
37	300.2	0.2	87	300.0	0.0
38	300.2	0.2	88	300.0	0.0
39	300.2	0.2	89	300.0	0.0
40	300.6	0.6	90	300.2	0.2
41	300.7	0.7	91	300.2	0.2
42	300.9	0.9	92	300.6	0.6
43	301.1	1.1	93	300.6	0.6
44	300.7	0.7	94	300.2	0.2
45	300.2	0.2	95	300.4	0.4
46	300.4	0.4	96	300.4	0.4
47	300.4	0.4	97	300.6	0.6
48	300.4	0.4	98	300.7	0.7
49	300.6	0.6	99	300.7	0.7
50	300.7	0.7	100	300.7	0.7

Range of 300°F Readings: +1.3/-0.3

Allowable limits

Lower	Upper	
298.1	301.9	(±1.9)

Channel Verification for Yokogawa 100 Channel

Serial No.: 99-LE-006

Calibrator Used: T-207318

Temperature Setting (°F): 400.0

Within specs? Yes/No

Performed by: Mike Dey

Title: Mgr. Dept. 2

Approved by:

Title:

Date: 3/11/05

Channel No.	Reading (°F)	+/-	Channel No.	Reading (°F)	+/-
1	401.0	1.0	51	399.9	-0.1
2	401.4	1.4	52	400.3	0.3
3	401.4	1.4	53	400.3	0.3
4	400.6	0.6	54	399.7	-0.3
5	400.3	0.3	55	399.7	-0.3
6	400.5	0.5	56	399.7	-0.3
7	400.5	0.5	57	399.7	-0.3
8	400.5	0.5	58	399.7	-0.3
9	400.6	0.6	59	399.7	-0.3
10	400.8	0.8	60	399.9	-0.1
11	400.8	0.8	61	400.8	0.8
12	401.4	1.4	62	401.0	1.0
13	401.4	1.4	63	400.8	0.8
14	400.6	0.6	64	400.5	0.5
15	400.6	0.6	65	400.5	0.5
16	400.6	0.6	66	400.5	0.5
17	400.5	0.5	67	400.3	0.3
18	400.5	0.5	68	400.5	0.5
19	400.8	0.8	69	400.5	0.5
20	400.8	0.8	70	401.0	1.0
21	400.6	0.6	71	400.6	0.6
22	400.8	0.8	72	400.8	0.8
23	400.8	0.8	73	400.8	0.8
24	400.3	0.3	74	400.3	0.3
25	400.3	0.3	75	400.3	0.3
26	400.3	0.3	76	400.3	0.3
27	400.3	0.3	77	400.3	0.3
28	400.3	0.3	78	400.3	0.3
29	400.5	0.5	79	400.3	0.3
30	400.6	0.6	80	400.6	0.6
31	400.5	0.5	81	400.1	0.1
32	401.0	1.0	82	400.3	0.3
33	401.0	1.0	83	400.3	0.3
34	400.3	0.3	84	400.1	0.1
35	400.3	0.3	85	399.9	-0.1
36	400.3	0.3	86	400.1	0.1
37	400.3	0.3	87	399.9	-0.1
38	400.3	0.3	88	399.9	-0.1
39	400.3	0.3	89	400.3	0.3
40	400.5	0.5	90	400.3	0.3
41	400.5	0.5	91	400.3	0.3
42	401.2	1.2	92	400.5	0.5
43	401.4	1.4	93	400.5	0.5
44	400.5	0.5	94	400.3	0.3
45	400.5	0.5	95	400.5	0.5
46	400.5	0.5	96	400.5	0.5
47	400.3	0.3	97	400.5	0.5
48	400.3	0.3	98	400.6	0.6
49	400.5	0.5	99	400.6	0.6
50	400.8	0.8	100	400.5	0.5

Range of 400°F Readings: +1.4/-0.3

	Lower	Upper	
Allowable limits	398.0	402.0	(±2.0)

Channel Verification for Yokogawa 100 Channel

Serial No.: 99-LE-006

Calibrator Used: T-207318

Temperature Setting (°F): 1000.0

Within specs? Yes/No

Performed by: Mike Dey MD

Title: Mgr. Dept. 2

Approved by: DP

Title:

Date: 3/11/05

Channel No.	Reading (°F)	+/-	Channel No.	Reading (°F)	+/-
1	1000.9	0.9	51	1000.0	0.0
2	1000.9	0.9	52	1000.2	0.2
3	1000.9	0.9	53	1000.2	0.2
4	1000.4	0.4	54	1000.0	0.0
5	1000.4	0.4	55	999.7	-0.3
6	1000.2	0.2	56	999.7	-0.3
7	1000.2	0.2	57	999.7	-0.3
8	1000.4	0.4	58	999.9	-0.1
9	1000.4	0.4	59	999.7	-0.3
10	1000.6	0.6	60	1000.0	0.0
11	1000.6	0.6	61	1000.6	0.6
12	1000.9	0.9	62	1000.7	0.7
13	1000.8	0.8	63	1000.9	0.9
14	1000.4	0.4	64	1000.4	0.4
15	1000.2	0.2	65	1000.0	0.0
16	1000.2	0.2	66	1000.2	0.2
17	1000.4	0.4	67	1000.4	0.4
18	1000.4	0.4	68	1000.2	0.2
19	1000.4	0.4	69	1000.4	0.4
20	1000.6	0.6	70	1000.8	0.8
21	1000.8	0.8	71	1000.6	0.6
22	1001.3	1.3	72	1000.8	0.8
23	1001.1	1.1	73	1000.8	0.8
24	1000.6	0.6	74	1000.2	0.2
25	1000.6	0.6	75	1000.0	0.0
26	1000.6	0.6	76	1000.0	0.0
27	1000.6	0.6	77	1000.0	0.0
28	1000.6	0.6	78	1000.0	0.0
29	1000.8	0.8	79	1000.2	0.2
30	1000.9	0.9	80	1000.4	0.4
31	1000.6	0.6	81	999.9	-0.1
32	1000.8	0.8	82	1000.0	0.0
33	1000.6	0.6	83	1000.0	0.0
34	1000.2	0.2	84	999.7	-0.3
35	1000.2	0.2	85	999.9	-0.1
36	1000.0	0.0	86	999.7	-0.3
37	1000.0	0.0	87	999.7	-0.3
38	1000.2	0.2	88	999.9	-0.1
39	1000.2	0.2	89	999.9	-0.1
40	1000.4	0.4	90	1000.0	0.0
41	1000.6	0.6	91	1000.4	0.4
42	1000.9	0.9	92	1000.4	0.4
43	1000.9	0.9	93	1000.6	0.6
44	1000.2	0.2	94	1000.4	0.4
45	1000.2	0.2	95	1000.4	0.4
46	1000.0	0.0	96	1000.6	0.6
47	1000.2	0.2	97	1000.6	0.6
48	1000.2	0.2	98	1000.6	0.6
49	1000.0	0.0	99	1000.6	0.6
50	1000.6	0.6	100	1000.6	0.6

Range of 2000°F Readings: +1.3/-0.3

	Lower	Upper	
Allowable limits	997.7	1002.3	(±2.3)

Channel Verification for Yokogawa 100 Channel

Serial No.: 99-LE-006

Calibrator Used: T-207318

Temperature Setting (°F): 2000.0

Within specs? (Yes)/No

Performed by: Mike Dey MD

Title: Mgr. Dept. 2

Approved by: DP

Title:

Date: 3/11/05

Channel No.	Reading (°F)	+/-	Channel No.	Reading (°F)	+/-
1	2000.1	0.1	51	1999.9	-0.1
2	2000.3	0.3	52	2000.5	0.5
3	2000.3	0.3	53	2000.5	0.5
4	1999.8	-0.2	54	1999.9	-0.1
5	1999.4	-0.6	55	1999.9	-0.1
6	1999.6	-0.4	56	1999.9	-0.1
7	1999.6	-0.4	57	1999.9	-0.1
8	1999.6	-0.4	58	1999.9	-0.1
9	1999.9	-0.1	59	1999.9	-0.1
10	2000.1	0.1	60	2000.1	0.1
11	2000.7	0.7	61	2000.7	0.7
12	2001.0	1.0	62	2000.6	0.6
13	2001.0	1.0	63	2000.8	0.8
14	2000.3	0.3	64	2000.3	0.3
15	2000.3	0.3	65	2000.3	0.3
16	2000.3	0.3	66	2000.5	0.5
17	2000.3	0.3	67	2000.1	0.1
18	2000.3	0.3	68	2000.3	0.3
19	2000.5	0.5	69	2000.5	0.5
20	2000.7	0.7	70	2000.7	0.7
21	2001.6	1.6	71	2000.3	0.3
22	2001.7	1.7	72	2000.7	0.7
23	2001.7	1.7	73	2000.5	0.5
24	2001.2	1.2	74	1999.9	-0.1
25	2001.0	1.0	75	1999.9	-0.1
26	2001.2	1.2	76	1999.9	-0.1
27	2001.2	1.2	77	1999.9	-0.1
28	2001.2	1.2	78	1999.9	-0.1
29	2001.4	1.4	79	1999.9	-0.1
30	2001.7	1.7	80	2000.1	0.1
31	2000.3	0.3	81	1999.9	-0.1
32	2000.7	0.7	82	1999.9	-0.1
33	2000.8	0.8	83	2000.1	0.1
34	2000.1	0.1	84	1999.6	-0.4
35	1999.9	-0.1	85	1999.6	-0.4
36	1999.9	-0.1	86	1999.8	-0.2
37	1999.9	-0.1	87	1999.6	-0.4
38	1999.9	-0.1	88	1999.8	-0.2
39	2000.1	0.1	89	1999.9	-0.1
40	2000.5	0.5	90	2000.1	0.1
41	2000.5	0.5	91	2000.7	0.7
42	2000.7	0.7	92	2000.7	0.7
43	2001.0	1.0	93	2000.7	0.7
44	2000.3	0.3	94	2000.7	0.7
45	2000.1	0.1	95	2000.7	0.7
46	2000.3	0.3	96	2000.7	0.7
47	2000.1	0.1	97	2000.8	0.8
48	1999.9	-0.1	98	2001.0	1.0
49	2000.3	0.3	99	2000.8	0.8
50	2000.5	0.5	100	2001.0	1.0

Range of 2000°F Readings: +1.7/-0.6

	Lower	Upper	
Allowable limits	1997.2	2002.8	(±2.8)

Omega Point Laboratories, Inc.
16015 Shady Falls Road
Elmendorf, Texas 78112
800-966-5253 FAX 210-635-8101

Certificate of Verification

Certification No.:	92148
Verification Date:	04/11/2005
Re-verification Date:	10/11/2005
Manufacturer:	Yokogawa
Model No.:	300 Channel DAU-
Serial No.:	48JF0082
Equipment Description:	300 Channel Data Acquisition System with YOKOGAWA Darwin Series
Calibration Sources:	Tegam T-156701 due: 07/26/2005

PERFORMANCE:

Temperature: (75°F) 1.3/-0.3	Temperature: (150°F) 1.2/-0.6	Temperature: (300°F) 1.1/-0.5	Temperature: (400°F) +1.2/-0.4	Temperature: (1000°F) 1.3/-0.5	Temperature: (2000°F) 2.6/-1.5

Measurement Uncertainty: ± 0.2%

Verification Performed by:

Mike Dey
Manager Fire Resistance

Verification Approved by:

Deg Priest
President/Chief Technical Officer

Channel Verification for Yokogawa 300 Channel

Serial No.: 48JF0082

Calibrator Used: SNT156701

Temperature Setting (°F): 75.0

Channel No.	Reading (°F)	+/-	Channel No.	Reading (°F)	+/-	Channel No.	Reading (°F)	+/-
1	75.4	0.4	101	75.0	0.0	201	75.0	0.0
2	75.2	0.2	102	75.0	0.0	202	75.0	0.0
3	75.2	0.2	103	75.2	0.2	203	75.0	0.0
4	75.4	0.4	104	75.2	0.2	204	75.0	0.0
5	75.4	0.4	105	75.2	0.2	205	75.2	0.2
6	75.6	0.6	106	75.2	0.2	206	75.2	0.2
7	75.6	0.6	107	75.2	0.2	207	75.4	0.4
8	75.6	0.6	108	75.4	0.4	208	75.6	0.6
9	75.7	0.7	109	75.6	0.6	209	75.7	0.7
10	75.9	0.9	110	75.7	0.7	210	75.9	0.9
11	75.2	0.2	111	74.8	-0.2	211	74.8	-0.2
12	75.2	0.2	112	74.8	-0.2	212	74.7	-0.3
13	75.2	0.2	113	74.8	-0.2	213	74.8	-0.2
14	75.2	0.2	114	75.2	0.2	214	74.8	-0.2
15	75.2	0.2	115	75.2	0.2	215	75.0	0.0
16	75.2	0.2	116	75.2	0.2	216	75.0	0.0
17	75.4	0.4	117	75.2	0.2	217	75.2	0.2
18	75.4	0.4	118	75.4	0.4	218	75.2	0.2
19	75.6	0.6	119	75.6	0.6	219	75.2	0.2
20	75.7	0.7	120	75.7	0.7	220	75.6	0.6
21	75.4	0.4	121	75.7	0.7	221	74.8	-0.2
22	75.4	0.4	122	75.4	0.4	222	74.7	-0.3
23	75.4	0.4	123	75.4	0.4	223	74.8	-0.2
24	75.2	0.2	124	75.4	0.4	224	75.0	0.0
25	75.6	0.6	125	75.4	0.4	225	75.0	0.0
26	75.7	0.7	126	75.4	0.4	226	75.0	0.0
27	75.7	0.7	127	75.6	0.6	227	75.0	0.0
28	75.7	0.7	128	75.6	0.6	228	75.2	0.2
29	75.7	0.7	129	75.7	0.7	229	75.2	0.2
30	75.9	0.9	130	75.9	0.9	230	75.6	0.6
31	75.4	0.4	131	74.8	-0.2	231	74.7	-0.3
32	75.2	0.2	132	74.8	-0.2	232	74.7	-0.3
33	75.4	0.4	133	74.7	-0.3	233	74.8	-0.2
34	75.2	0.2	134	74.8	-0.2	234	74.8	-0.2
35	75.4	0.4	135	75.0	0.0	235	75.0	0.0
36	75.4	0.4	136	75.0	0.0	236	75.0	0.0
37	75.4	0.4	137	75.0	0.0	237	75.2	0.2
38	75.4	0.4	138	75.2	0.2	238	75.2	0.2
39	75.7	0.7	139	75.2	0.2	239	75.4	0.4
40	75.9	0.9	140	75.7	0.7	240	75.6	0.6
41	75.2	0.2	141	75.0	0.0	241	75.4	0.4
42	75.2	0.2	142	74.8	-0.2	242	75.2	0.2
43	75.2	0.2	143	75.0	0.0	243	75.2	0.2
44	75.2	0.2	144	75.0	0.0	244	75.2	0.2
45	75.2	0.2	145	75.0	0.0	245	75.2	0.2
46	75.2	0.2	146	75.0	0.0	246	75.2	0.2
47	75.2	0.2	147	75.0	0.0	247	75.4	0.4
48	75.4	0.4	148	75.2	0.2	248	75.6	0.6
49	75.4	0.4	149	75.2	0.2	249	75.7	0.7
50	75.7	0.7	150	75.6	0.6	250	76.3	1.3
51	74.8	-0.2	151	75.2	0.2	251	75.0	0.0
52	75.0	0.0	152	75.2	0.2	252	75.0	0.0
53	75.0	0.0	153	75.2	0.2	253	74.8	-0.2
54	75.2	0.2	154	75.2	0.2	254	75.0	0.0

55	75.2	0.2	155
56	75.2	0.2	156
57	75.2	0.2	157
58	75.4	0.4	158
59	75.6	0.6	159
60	75.7	0.7	160
61	75.4	0.4	161
62	75.2	0.2	162
63	75.2	0.2	163
64	75.2	0.2	164
65	75.2	0.2	165
66	75.2	0.2	166
67	75.4	0.4	167
68	75.4	0.4	168
69	75.7	0.7	169
70	75.9	0.9	170
71	75.4	0.4	171
72	75.2	0.2	172
73	75.4	0.4	173
74	75.4	0.4	174
75	75.4	0.4	175
76	75.4	0.4	176
77	75.6	0.6	177
78	75.6	0.6	178
79	75.7	0.7	179
80	75.7	0.7	180
81	75.2	0.2	181
82	75.2	0.2	182
83	75.2	0.2	183
84	75.2	0.2	184
85	75.2	0.2	185
86	75.2	0.2	186
87	75.2	0.2	187
88	75.4	0.4	188
89	75.6	0.6	189
90	75.7	0.7	190
91	75.2	0.2	191
92	75.2	0.2	192
93	75.2	0.2	193
94	75.2	0.2	194
95	75.2	0.2	195
96	75.2	0.2	196
97	75.4	0.4	197
98	75.6	0.6	198
99	75.4	0.4	199
100	75.6	0.6	200

75.2	0.2	255
75.2	0.2	256
75.4	0.4	257
75.4	0.4	258
75.6	0.6	259
75.7	0.7	260
75.2	0.2	261
75.2	0.2	262
75.2	0.2	263
75.2	0.2	264
75.2	0.2	265
75.2	0.2	266
75.4	0.4	267
75.4	0.4	268
75.6	0.6	269
75.7	0.7	270
74.7	-0.3	271
74.7	-0.3	272
74.8	-0.2	273
74.8	-0.2	274
75.2	0.2	275
75.2	0.2	276
75.2	0.2	277
75.4	0.4	278
75.6	0.6	279
75.7	0.7	280
75.6	0.6	281
75.2	0.2	282
75.2	0.2	283
75.2	0.2	284
75.2	0.2	285
75.2	0.2	286
75.2	0.2	287
75.2	0.2	288
75.6	0.6	289
75.9	0.9	290
75.0	0.0	291
74.8	-0.2	292
74.8	-0.2	293
74.8	-0.2	294
75.0	0.0	295
75.0	0.0	296
75.2	0.2	297
75.2	0.2	298
75.2	0.2	299
75.6	0.6	300

75.2	0.2
75.2	0.2
75.2	0.2
75.2	0.2
75.6	0.6
75.7	0.7
75.0	0.0
75.0	0.0
75.0	0.0
75.2	0.2
75.2	0.2
75.2	0.2
75.2	0.2
75.2	0.2
75.4	0.4
75.6	0.6
75.7	0.7
75.2	0.2
75.2	0.2
75.2	0.2
75.2	0.2
75.2	0.2
75.4	0.4
75.4	0.4
75.6	0.6
75.7	0.7
76.1	1.1
75.0	0.0
75.0	0.0
75.0	0.0
75.0	0.0
75.0	0.0
75.0	0.0
75.2	0.2
75.2	0.2
75.2	0.2
75.6	0.6
74.7	-0.3
74.7	-0.3
74.8	-0.2
74.8	-0.2
75.0	0.0
75.0	0.0
75.2	0.2
75.2	0.2
75.4	0.4
75.7	0.7

Range for 75°F Signal: **+1.3/-0.3**

Allowable range: ±1.8

Within specification for this temperature? Yes

Performed by: Mike Dey

Mgr. Fire Resistance — 4/11/05

Title — Date

Approved by:

President — 4/11/05

Title — Date

Channel Verification for Yokogawa 300 Channel

Serial No.: 48JF0082

Calibrator Used: SNT156701

Temperature Setting (°F): 150.0

Channel No.	Reading (°F)	+/-	Channel No.	Reading (°F)	+/-	Channel No.	Reading (°F)	+/-
1	150.6	0.6	101	150.1	0.1	201	150.1	0.1
2	150.3	0.3	102	150.1	0.1	202	150.1	0.1
3	150.3	0.3	103	150.3	0.3	203	150.1	0.1
4	150.3	0.3	104	150.3	0.3	204	150.3	0.3
5	150.4	0.4	105	150.3	0.3	205	150.3	0.3
6	150.4	0.4	106	150.3	0.3	206	150.3	0.3
7	150.6	0.6	107	150.3	0.3	207	150.3	0.3
8	150.6	0.6	108	150.3	0.3	208	150.4	0.4
9	150.8	0.8	109	150.4	0.4	209	150.6	0.6
10	151.0	1.0	110	150.8	0.8	210	150.8	0.8
11	150.1	0.1	111	150.1	0.1	211	149.5	-0.5
12	150.1	0.1	112	150.1	0.1	212	149.4	-0.6
13	150.1	0.1	113	150.1	0.1	213	149.5	-0.5
14	150.1	0.1	114	150.3	0.3	214	149.5	-0.5
15	150.1	0.1	115	150.3	0.3	215	149.5	-0.5
16	150.1	0.1	116	150.3	0.3	216	149.5	-0.5
17	150.1	0.1	117	150.3	0.3	217	149.7	-0.3
18	150.3	0.3	118	150.4	0.4	218	149.7	-0.3
19	150.3	0.3	119	150.6	0.6	219	149.9	-0.1
20	150.6	0.6	120	150.6	0.6	220	150.3	0.3
21	150.3	0.3	121	150.4	0.4	221	149.5	-0.5
22	150.3	0.3	122	150.3	0.3	222	149.7	-0.3
23	150.3	0.3	123	150.3	0.3	223	149.7	-0.3
24	150.3	0.3	124	150.3	0.3	224	149.7	-0.3
25	150.4	0.4	125	150.3	0.3	225	149.9	-0.1
26	150.6	0.6	126	150.3	0.3	226	150.1	0.1
27	150.6	0.6	127	150.3	0.3	227	150.1	0.1
28	150.8	0.8	128	150.3	0.3	228	150.3	0.3
29	150.8	0.8	129	150.6	0.6	229	150.3	0.3
30	151.0	1.0	130	150.8	0.8	230	150.4	0.4
31	150.4	0.4	131	149.7	-0.3	231	149.7	-0.3
32	150.3	0.3	132	149.7	-0.3	232	149.7	-0.3
33	150.3	0.3	133	149.7	-0.3	233	149.7	-0.3
34	150.3	0.3	134	149.7	-0.3	234	149.7	-0.3
35	150.3	0.3	135	149.7	-0.3	235	149.9	-0.1
36	150.3	0.3	136	149.7	-0.3	236	150.1	0.1
37	150.4	0.4	137	149.9	-0.1	237	150.1	0.1
38	150.4	0.4	138	150.1	0.1	238	150.3	0.3
39	150.6	0.6	139	150.3	0.3	239	150.3	0.3
40	150.8	0.8	140	150.3	0.3	240	150.6	0.6
41	149.9	-0.1	141	149.9	-0.1	241	150.3	0.3
42	149.9	-0.1	142	149.7	-0.3	242	150.3	0.3
43	150.1	0.1	143	149.9	-0.1	243	150.3	0.3
44	150.1	0.1	144	149.9	-0.1	244	150.3	0.3
45	150.3	0.3	145	149.9	-0.1	245	150.3	0.3
46	150.3	0.3	146	150.1	0.1	246	150.3	0.3
47	150.3	0.3	147	150.3	0.3	247	150.4	0.4
48	150.3	0.3	148	150.3	0.3	248	150.6	0.6
49	150.3	0.3	149	150.3	0.3	249	150.8	0.8
50	150.6	0.6	150	150.3	0.3	250	151.2	1.2
51	149.7	-0.3	151	150.3	0.3	251	150.1	0.1
52	149.7	-0.3	152	150.3	0.3	252	150.1	0.1
53	149.7	-0.3	153	150.1	0.1	253	149.9	-0.1
54	149.9	-0.1	154	150.1	0.1	254	150.1	0.1

55	150.1	0.1	155	150.3	0.3	255	150.1	0.1
56	150.1	0.1	156	150.3	0.3	256	150.1	0.1
57	150.1	0.1	157	150.3	0.3	257	150.3	0.3
58	150.3	0.3	158	150.3	0.3	258	150.3	0.3
59	150.3	0.3	159	150.4	0.4	259	150.3	0.3
60	150.6	0.6	160	150.8	0.8	260	150.8	0.8
61	150.3	0.3	161	150.3	0.3	261	150.1	0.1
62	150.3	0.3	162	150.1	0.1	262	150.1	0.1
63	150.3	0.3	163	150.3	0.3	263	150.1	0.1
64	150.3	0.3	164	150.3	0.3	264	150.3	0.3
65	150.3	0.3	165	150.3	0.3	265	150.1	0.1
66	150.3	0.3	166	150.3	0.3	266	150.3	0.3
67	150.3	0.3	167	150.3	0.3	267	150.3	0.3
68	150.4	0.4	168	150.3	0.3	268	150.4	0.4
69	150.6	0.6	169	150.4	0.4	269	150.4	0.4
70	150.8	0.8	170	150.8	0.8	270	150.8	0.8
71	150.3	0.3	171	149.7	-0.3	271	150.3	0.3
72	150.3	0.3	172	149.7	-0.3	272	150.1	0.1
73	150.3	0.3	173	149.9	-0.1	273	150.1	0.1
74	150.3	0.3	174	149.9	-0.1	274	150.3	0.3
75	150.1	0.1	175	149.9	-0.1	275	150.3	0.3
76	150.1	0.1	176	149.9	-0.1	276	150.3	0.3
77	150.3	0.3	177	149.9	-0.1	277	150.4	0.4
78	150.3	0.3	178	150.1	0.1	278	150.4	0.4
79	150.3	0.3	179	150.3	0.3	279	150.6	0.6
80	150.8	0.8	180	150.4	0.4	280	151.0	1.0
81	150.3	0.3	181	150.3	0.3	281	149.7	-0.3
82	150.3	0.3	182	150.3	0.3	282	149.7	-0.3
83	150.3	0.3	183	150.3	0.3	283	149.7	-0.3
84	150.3	0.3	184	150.3	0.3	284	149.7	-0.3
85	150.3	0.3	185	150.3	0.3	285	149.9	-0.1
86	150.3	0.3	186	150.3	0.3	286	149.9	-0.1
87	150.3	0.3	187	150.3	0.3	287	149.9	-0.1
88	150.4	0.4	188	150.6	0.6	288	150.1	0.1
89	150.4	0.4	189	150.6	0.6	289	150.3	0.3
90	150.6	0.6	190	150.8	0.8	290	150.4	0.4
91	150.1	0.1	191	149.9	-0.1	291	149.7	-0.3
92	150.1	0.1	192	149.9	-0.1	292	149.7	-0.3
93	150.1	0.1	193	149.9	-0.1	293	149.7	-0.3
94	150.1	0.1	194	149.9	-0.1	294	149.7	-0.3
95	150.3	0.3	195	150.1	0.1	295	149.9	-0.1
96	150.3	0.3	196	150.3	0.3	296	149.9	-0.1
97	150.3	0.3	197	150.3	0.3	297	150.3	0.3
98	150.3	0.3	198	150.3	0.3	298	150.3	0.3
99	150.3	0.3	199	150.3	0.3	299	150.3	0.3
100	150.4	0.4	200	150.6	0.6	300	150.4	0.4

Range for 150°F Signal: **+1.2/-0.6**

Allowable range: ±1.8

Within specification for this temperature? Yes

Performed by: Mike Dey

Mgr. Fire Resistance — Title

4/11/05 — Date

MD

Approved by:

President — Title

4/11/05 — Date

Channel Verification for Yokogawa 300 Channel

Serial No.: 48JF0082

Calibrator Used: SNT156701

Temperature Setting (°F): 300.0

Channel No.	Reading (°F)	+/-	Channel No.	Reading (°F)	+/-	Channel No.	Reading (°F)	+/-
1	300.4	0.4	101	299.8	-0.2	201	299.8	-0.2
2	300.2	0.2	102	299.8	-0.2	202	300.0	0.0
3	300.2	0.2	103	300.0	0.0	203	299.8	-0.2
4	300.2	0.2	104	300.0	0.0	204	300.0	0.0
5	300.2	0.2	105	300.0	0.0	205	300.0	0.0
6	300.2	0.2	106	300.2	0.2	206	300.2	0.2
7	300.2	0.2	107	300.2	0.2	207	300.2	0.2
8	300.4	0.4	108	300.2	0.2	208	300.2	0.2
9	300.6	0.6	109	300.4	0.4	209	300.6	0.6
10	300.7	0.7	110	300.6	0.6	210	300.7	0.7
11	300.0	0.0	111	299.8	-0.2	211	299.5	-0.5
12	299.8	-0.2	112	299.7	-0.3	212	299.5	-0.5
13	299.8	-0.2	113	299.8	-0.2	213	299.5	-0.5
14	300.0	0.0	114	299.8	-0.2	214	299.8	-0.2
15	300.0	0.0	115	300.0	0.0	215	299.8	-0.2
16	300.0	0.0	116	300.0	0.0	216	300.0	0.0
17	300.0	0.0	117	300.2	0.2	217	300.9	0.9
18	300.2	0.2	118	300.2	0.2	218	300.9	0.9
19	300.2	0.2	119	300.4	0.4	219	300.2	0.2
20	300.4	0.4	120	300.7	0.7	220	300.2	0.2
21	300.2	0.2	121	300.4	0.4	221	299.5	-0.5
22	300.2	0.2	122	300.2	0.2	222	299.5	-0.5
23	300.2	0.2	123	300.2	0.2	223	299.5	-0.5
24	300.2	0.2	124	300.2	0.2	224	299.5	-0.5
25	300.2	0.2	125	300.2	0.2	225	299.8	-0.2
26	300.4	0.4	126	300.2	0.2	226	299.8	-0.2
27	300.4	0.4	127	300.4	0.4	227	299.8	-0.2
28	300.6	0.6	128	300.4	0.4	228	300.0	0.0
29	300.6	0.6	129	300.6	0.6	229	300.2	0.2
30	300.9	0.9	130	300.7	0.7	230	300.4	0.4
31	300.4	0.4	131	299.8	-0.2	231	299.7	-0.3
32	300.4	0.4	132	299.7	-0.3	232	299.7	-0.3
33	300.2	0.2	133	299.7	-0.3	233	299.7	-0.3
34	300.4	0.4	134	299.7	-0.3	234	299.7	-0.3
35	300.4	0.4	135	299.7	-0.3	235	299.8	-0.2
36	300.4	0.4	136	299.7	-0.3	236	299.8	-0.2
37	300.6	0.6	137	299.8	-0.2	237	300.0	0.0
38	300.7	0.7	138	300.0	0.0	238	300.2	0.2
39	300.7	0.7	139	300.2	0.2	239	300.2	0.2
40	301.1	1.1	140	300.6	0.6	240	300.4	0.4
41	300.0	0.0	141	299.8	-0.2	241	300.2	0.2
42	300.0	0.0	142	299.7	-0.3	242	300.2	0.2
43	300.0	0.0	143	299.8	-0.2	243	300.2	0.2
44	299.8	-0.2	144	299.8	-0.2	244	300.2	0.2
45	300.0	0.0	145	299.8	-0.2	245	300.2	0.2
46	300.0	0.0	146	299.8	-0.2	246	300.2	0.2
47	300.0	0.0	147	300.0	0.0	247	300.6	0.6
48	300.2	0.2	148	300.0	0.0	248	300.6	0.6
49	300.2	0.2	149	300.2	0.2	249	300.6	0.6
50	300.4	0.4	150	300.4	0.4	250	300.9	0.9
51	299.8	-0.2	151	300.2	0.2	251	299.8	-0.2
52	300.0	0.0	152	300.0	0.0	252	299.8	-0.2
53	300.2	0.2	153	300.0	0.0	253	300.0	0.0
54	300.2	0.2	154	300.0	0.0	254	299.8	-0.2
55	300.2	0.2	155	300.0	0.0	255	300.0	0.0
56	300.2	0.2	156	300.2	0.2	256	300.0	0.0

57	300.4	0.4	157	300.2	0.2	257	300.2	0.2
58	300.4	0.4	158	300.2	0.2	258	300.2	0.2
59	300.4	0.4	159	300.4	0.4	259	300.4	0.4
60	300.6	0.6	160	300.7	0.7	260	300.7	0.7
61	300.2	0.2	161	300.2	0.2	261	299.7	-0.3
62	300.2	0.2	162	300.2	0.2	262	299.8	-0.2
63	300.0	0.0	163	300.2	0.2	263	299.8	-0.2
64	300.2	0.2	164	300.2	0.2	264	299.8	-0.2
65	300.2	0.2	165	300.2	0.2	265	299.8	-0.2
66	300.2	0.2	166	300.2	0.2	266	300.0	0.0
67	300.2	0.2	167	300.2	0.2	267	300.0	0.0
68	300.2	0.2	168	300.2	0.2	268	300.2	0.2
69	300.6	0.6	169	300.2	0.2	269	300.6	0.6
70	300.7	0.7	170	300.7	0.7	270	300.7	0.7
71	300.2	0.2	171	299.5	-0.5	271	300.0	0.0
72	300.2	0.2	172	299.5	-0.5	272	300.0	0.0
73	300.2	0.2	173	299.7	-0.3	273	300.0	0.0
74	300.2	0.2	174	299.7	-0.3	274	300.2	0.2
75	300.2	0.2	175	299.7	-0.3	275	300.2	0.2
76	300.2	0.2	176	299.7	-0.3	276	300.2	0.2
77	300.2	0.2	177	299.8	-0.2	277	300.2	0.2
78	300.2	0.2	178	299.8	-0.2	278	300.2	0.2
79	300.4	0.4	179	300.2	0.2	279	300.6	0.6
80	300.6	0.6	180	300.4	0.4	280	300.7	0.7
81	300.2	0.2	181	300.2	0.2	281	299.5	-0.5
82	300.0	0.0	182	300.2	0.2	282	299.5	-0.5
83	300.0	0.0	183	300.2	0.2	283	299.5	-0.5
84	300.0	0.0	184	300.2	0.2	284	299.5	-0.5
85	300.2	0.2	185	300.2	0.2	285	299.5	-0.5
86	300.2	0.2	186	300.2	0.2	286	299.7	-0.3
87	300.2	0.2	187	300.2	0.2	287	299.8	-0.2
88	300.2	0.2	188	300.4	0.4	288	300.0	0.0
89	300.6	0.6	189	300.6	0.6	289	300.2	0.2
90	300.7	0.7	190	300.7	0.7	290	300.6	0.6
91	300.0	0.0	191	299.8	-0.2	291	299.5	-0.5
92	299.8	-0.2	192	299.8	-0.2	292	299.5	-0.5
93	300.0	0.0	193	299.8	-0.2	293	299.5	-0.5
94	299.8	-0.2	194	299.8	-0.2	294	299.7	-0.3
95	300.0	0.0	195	299.8	-0.2	295	299.7	-0.3
96	300.0	0.0	196	300.0	0.0	296	299.7	-0.3
97	300.0	0.0	197	300.0	0.0	297	299.8	-0.2
98	300.2	0.2	198	300.2	0.2	298	300.0	0.0
99	300.4	0.4	199	300.2	0.2	299	300.2	0.2
100	300.6	0.6	200	300.7	0.7	300	300.6	0.6

Range for 300°F Signal: **+1.1/-0.5**

Allowable range ±1.9

Within specification for this temperature? Yes

Performed by: Mike Day

Mgr. Fire Resistance — Title

4/11/05 — Date

Approved by:

President — Title

4/11/05 — Date

Channel Verification for Yokogawa 300 Channel

Serial No.: 48JF0082

Calibrator Used: SNT156701

Temperature Setting (°F): 400.0

Channel No.	Reading (°F)	+/-	Channel No.	Reading (°F)	+/-	Channel No.	Reading (°F)	+/-
1	400.3	0.3	101	400.1	0.1	201	400.1	0.1
2	400.3	0.3	102	399.9	-0.1	202	400.1	0.1
3	400.1	0.1	103	400.1	0.1	203	400.1	0.1
4	400.3	0.3	104	400.1	0.1	204	400.3	0.3
5	400.3	0.3	105	400.1	0.1	205	400.3	0.3
6	400.3	0.3	106	400.1	0.1	206	400.3	0.3
7	400.3	0.3	107	400.3	0.3	207	400.3	0.3
8	400.5	0.5	108	400.3	0.3	208	400.5	0.5
9	400.6	0.6	109	400.3	0.3	209	400.6	0.6
10	400.8	0.8	110	400.6	0.6	210	400.8	0.8
11	400.1	0.1	111	399.7	-0.3	211	399.7	-0.3
12	400.1	0.1	112	399.9	-0.1	212	399.7	-0.3
13	400.1	0.1	113	399.9	-0.1	213	399.7	-0.3
14	400.1	0.1	114	400.1	0.1	214	399.7	-0.3
15	400.1	0.1	115	400.1	0.1	215	399.7	-0.3
16	400.1	0.1	116	400.1	0.1	216	399.9	-0.1
17	400.3	0.3	117	400.3	0.3	217	400.1	0.1
18	400.3	0.3	118	400.3	0.3	218	400.1	0.1
19	400.5	0.5	119	400.3	0.3	219	400.3	0.3
20	400.6	0.6	120	400.6	0.6	220	400.5	0.5
21	400.3	0.3	121	400.5	0.5	221	399.6	-0.4
22	400.3	0.3	122	400.3	0.3	222	399.6	-0.4
23	400.3	0.3	123	400.3	0.3	223	399.6	-0.4
24	400.3	0.3	124	400.3	0.3	224	399.7	-0.3
25	400.3	0.3	125	400.3	0.3	225	399.9	-0.1
26	400.3	0.3	126	400.3	0.3	226	399.9	-0.1
27	400.3	0.3	127	400.3	0.3	227	400.3	0.3
28	400.3	0.3	128	400.5	0.5	228	400.1	0.1
29	400.6	0.6	129	400.6	0.6	229	400.3	0.3
30	400.8	0.8	130	400.8	0.8	230	400.6	0.6
31	400.3	0.3	131	399.9	-0.1	231	399.7	-0.3
32	400.3	0.3	132	399.9	-0.1	232	399.7	-0.3
33	400.3	0.3	133	399.7	-0.3	233	399.7	-0.3
34	400.3	0.3	134	399.9	-0.1	234	399.7	-0.3
35	400.3	0.3	135	399.9	-0.1	235	399.9	-0.1
36	400.3	0.3	136	399.9	-0.1	236	399.9	-0.1
37	400.3	0.3	137	399.9	-0.1	237	399.9	-0.1
38	400.5	0.5	138	400.1	0.1	238	400.1	0.1
39	400.5	0.5	139	400.3	0.3	239	400.3	0.3
40	400.8	0.8	140	400.5	0.5	240	400.5	0.5
41	399.9	-0.1	141	399.7	-0.3	241	400.3	0.3
42	399.9	-0.1	142	399.7	-0.3	242	400.3	0.3
43	399.9	-0.1	143	399.7	-0.3	243	400.3	0.3
44	399.9	-0.1	144	399.9	-0.1	244	400.3	0.3
45	400.1	0.1	145	399.9	-0.1	245	400.3	0.3
46	400.3	0.3	146	399.9	-0.1	246	400.5	0.5
47	400.3	0.3	147	400.1	0.1	247	400.5	0.5
48	400.3	0.3	148	400.3	0.3	248	400.8	0.8
49	400.3	0.3	149	400.1	0.1	249	400.8	0.8
50	400.6	0.6	150	400.3	0.3	250	401.2	1.2
51	399.7	-0.3	151	400.1	0.1	251	399.9	-0.1
52	399.9	-0.1	152	400.1	0.1	252	399.7	-0.3
53	400.1	0.1	153	400.3	0.3	253	399.9	-0.1
54	400.1	0.1	154	400.1	0.1	254	399.9	-0.1

55	400.1	0.1	155	400.3	0.3	255	400.1	0.1
56	400.3	0.3	156	400.3	0.3	256	399.9	-0.1
57	400.3	0.3	157	400.3	0.3	257	400.1	0.1
58	400.3	0.3	158	400.5	0.5	258	400.3	0.3
59	400.3	0.3	159	400.5	0.5	259	400.3	0.3
60	400.6	0.6	160	400.8	0.8	260	400.5	0.5
61	400.3	0.3	161	400.1	0.1	261	399.9	-0.1
62	400.3	0.3	162	399.9	-0.1	262	399.9	-0.1
63	400.3	0.3	163	399.9	-0.1	263	399.9	-0.1
64	400.1	0.1	164	400.1	0.1	264	399.9	-0.1
65	400.1	0.1	165	400.3	0.3	265	400.1	0.1
66	400.3	0.3	166	400.3	0.3	266	400.1	0.1
67	400.3	0.3	167	400.3	0.3	267	400.3	0.3
68	400.5	0.5	168	400.5	0.5	268	400.3	0.3
69	400.5	0.5	169	400.6	0.6	269	400.3	0.3
70	401.0	1.0	170	400.8	0.8	270	400.6	0.6
71	400.3	0.3	171	399.7	-0.3	271	399.9	-0.1
72	400.3	0.3	172	399.7	-0.3	272	399.7	-0.3
73	400.3	0.3	173	399.7	-0.3	273	399.9	-0.1
74	400.3	0.3	174	399.7	-0.3	274	399.7	-0.3
75	400.3	0.3	175	399.7	-0.3	275	400.3	0.3
76	400.1	0.1	176	399.9	-0.1	276	400.3	0.3
77	400.1	0.1	177	399.9	-0.1	277	400.3	0.3
78	400.3	0.3	178	400.3	0.3	278	400.3	0.3
79	400.5	0.5	179	400.3	0.3	279	400.5	0.5
80	400.6	0.6	180	400.5	0.5	280	400.8	0.8
81	400.3	0.3	181	400.5	0.5	281	399.6	-0.4
82	400.3	0.3	182	400.3	0.3	282	399.6	-0.4
83	400.1	0.1	183	400.3	0.3	283	399.7	-0.3
84	400.1	0.1	184	400.3	0.3	284	399.7	-0.3
85	400.3	0.3	185	400.3	0.3	285	399.7	-0.3
86	400.3	0.3	186	400.5	0.5	286	399.7	-0.3
87	400.3	0.3	187	400.5	0.5	287	399.9	-0.1
88	400.3	0.3	188	400.5	0.5	288	400.1	0.1
89	400.3	0.3	189	400.6	0.6	289	400.1	0.1
90	400.6	0.6	190	401.2	1.2	290	400.5	0.5
91	400.1	0.1	191	400.1	0.1	291	399.6	-0.4
92	400.1	0.1	192	400.1	0.1	292	399.6	-0.4
93	400.1	0.1	193	400.1	0.1	293	399.6	-0.4
94	400.1	0.1	194	400.1	0.1	294	399.6	-0.4
95	400.1	0.1	195	400.1	0.1	295	399.7	-0.3
96	400.3	0.3	196	400.3	0.3	296	399.9	-0.1
97	400.3	0.3	197	400.3	0.3	297	400.1	0.1
98	400.3	0.3	198	400.3	0.3	298	400.1	0.1
99	400.5	0.5	199	400.3	0.3	299	400.1	0.1
100	400.6	0.6	200	400.5	0.5	300	400.3	0.3

Range for 400°F Signal: **+1.2/-0.4**

Allowable range: ±2.0

Within specification for this temperature? Yes

Performed by: Mike Day

Mgr. Fire Resistance — Title

4/11/05 — Date

Approved by:

President — Title

4/11/05 — Date

Channel Verification for Yokogawa 300 Channel

Serial No.: 48JF0082

Calibrator Used: SNT156701

Temperature Setting (°F): 1000.0

Channel No.	Reading (°F)	+/-	Channel No.	Reading (°F)	+/-	Channel No.	Reading (°F)	+/-
1	1000.2	0.2	101	1000.2	0.2	201	1000.2	0.2
2	1000.0	0.0	102	1000.2	0.2	202	1000.2	0.2
3	1000.0	0.0	103	1000.2	0.2	203	1000.2	0.2
4	1000.0	0.0	104	1000.2	0.2	204	1000.4	0.4
5	1000.0	0.0	105	1000.2	0.2	205	1000.4	0.4
6	1000.0	0.0	106	1000.2	0.2	206	1000.6	0.6
7	1000.0	0.0	107	1000.4	0.4	207	1000.6	0.6
8	1000.2	0.2	108	1000.4	0.4	208	1000.8	0.8
9	1000.2	0.2	109	1000.6	0.6	209	1000.8	0.8
10	1000.6	0.6	110	1000.9	0.9	210	1001.1	1.1
11	999.9	-0.1	111	1000.0	0.0	211	1000.0	0.0
12	999.9	-0.1	112	1000.2	0.2	212	1000.0	0.0
13	999.9	-0.1	113	1000.2	0.2	213	999.9	-0.1
14	999.9	-0.1	114	1000.4	0.4	214	1000.0	0.0
15	1000.0	0.0	115	1000.6	0.6	215	1000.0	0.0
16	1000.0	0.0	116	1000.4	0.4	216	1000.0	0.0
17	1000.0	0.0	117	1000.6	0.6	217	1000.0	0.0
18	1000.0	0.0	118	1000.6	0.6	218	1000.0	0.0
19	1000.2	0.2	119	1000.6	0.6	219	1000.2	0.2
20	1000.4	0.4	120	1000.6	0.6	220	1000.6	0.6
21	1000.0	0.0	121	1000.2	0.2	221	999.9	-0.1
22	1000.0	0.0	122	1000.0	0.0	222	999.9	-0.1
23	1000.0	0.0	123	1000.0	0.0	223	1000.0	0.0
24	1000.0	0.0	124	1000.0	0.0	224	1000.0	0.0
25	1000.0	0.0	125	1000.0	0.0	225	1000.0	0.0
26	1000.2	0.2	126	1000.0	0.0	226	1000.0	0.0
27	1000.2	0.2	127	1000.0	0.0	227	1000.2	0.2
28	1000.2	0.2	128	1000.0	0.0	228	1000.2	0.2
29	1000.6	0.6	129	1000.6	0.6	229	1000.4	0.4
30	1000.6	0.6	130	1000.9	0.9	230	1000.6	0.6
31	1000.6	0.6	131	1000.0	0.0	231	1000.0	0.0
32	1000.6	0.6	132	999.9	-0.1	232	1000.0	0.0
33	1000.4	0.4	133	999.9	-0.1	233	1000.0	0.0
34	1000.4	0.4	134	1000.0	0.0	234	1000.0	0.0
35	1000.6	0.6	135	1000.0	0.0	235	1000.0	0.0
36	1000.6	0.6	136	999.9	-0.1	236	1000.0	0.0
37	1000.6	0.6	137	1000.0	0.0	237	1000.2	0.2
38	1000.6	0.6	138	1000.0	0.0	238	1000.2	0.2
39	1000.6	0.6	139	1000.0	0.0	239	1000.2	0.2
40	1000.8	0.8	140	1000.2	0.2	240	1000.6	0.6
41	1000.0	0.0	141	999.9	-0.1	241	1000.2	0.2
42	1000.0	0.0	142	999.9	-0.1	242	1000.0	0.0
43	1000.0	0.0	143	1000.0	0.0	243	1000.0	0.0
44	1000.0	0.0	144	1000.0	0.0	244	1000.0	0.0
45	1000.2	0.2	145	1000.0	0.0	245	1000.0	0.0
46	1000.2	0.2	146	1000.0	0.0	246	1000.0	0.0
47	1000.4	0.4	147	1000.2	0.2	247	1000.4	0.4
48	1000.2	0.2	148	1000.2	0.2	248	1000.6	0.6
49	1000.2	0.2	149	1000.0	0.0	249	1000.8	0.8
50	1000.4	0.4	150	1000.2	0.2	250	1000.9	0.9
51	999.9	-0.1	151	1000.0	0.0	251	1000.0	0.0
52	999.9	-0.1	152	1000.0	0.0	252	1000.0	0.0
53	1000.0	0.0	153	1000.0	0.0	253	1000.0	0.0
54	1000.0	0.0	154	1000.0	0.0	254	1000.0	0.0
55	1000.0	0.0	155	1000.0	0.0	255	1000.0	0.0
56	1000.0	0.0	156	1000.0	0.0	256	1000.0	0.0

57	1000.0	0.0	157	1000.2	0.2	257	1000.2	0.2
58	1000.0	0.0	158	1000.4	0.4	258	1000.2	0.2
59	1000.0	0.0	159	1000.6	0.6	259	1000.4	0.4
60	1000.6	0.6	160	1000.9	0.9	260	1000.8	0.8
61	1000.0	0.0	161	1000.2	0.2	261	1000.0	0.0
62	1000.0	0.0	162	1000.0	0.0	262	1000.0	0.0
63	1000.0	0.0	163	1000.2	0.2	263	1000.0	0.0
64	1000.0	0.0	164	1000.2	0.2	264	1000.0	0.0
65	1000.2	0.2	165	1000.2	0.2	265	1000.0	0.0
66	1000.2	0.2	166	1000.2	0.2	266	1000.0	0.0
67	1000.4	0.4	167	1000.4	0.4	267	1000.0	0.0
68	1000.4	0.4	168	1000.4	0.4	268	1000.2	0.2
69	1000.6	0.6	169	1000.6	0.6	269	1000.4	0.4
70	1000.8	0.8	170	1000.8	0.8	270	1000.8	0.8
71	1000.0	0.0	171	999.7	-0.3	271	1000.0	0.0
72	1000.0	0.0	172	999.7	-0.3	272	999.9	-0.1
73	1000.0	0.0	173	999.7	-0.3	273	1000.0	0.0
74	1000.0	0.0	174	999.9	-0.1	274	1000.0	0.0
75	1000.4	0.4	175	999.9	-0.1	275	1000.0	0.0
76	1000.6	0.6	176	999.9	-0.1	276	1000.2	0.2
77	1000.6	0.6	177	1000.0	0.0	277	1000.2	0.2
78	1000.6	0.6	178	1000.0	0.0	278	1000.2	0.2
79	1000.8	0.8	179	1000.2	0.2	279	1000.4	0.4
80	1000.9	0.9	180	1000.4	0.4	280	1000.6	0.6
81	1000.4	0.4	181	1000.6	0.6	281	999.5	-0.5
82	1000.2	0.2	182	1000.6	0.6	282	999.5	-0.5
83	1000.2	0.2	183	1000.6	0.6	283	999.7	-0.3
84	1000.2	0.2	184	1000.6	0.6	284	999.5	-0.5
85	1000.4	0.4	185	1000.6	0.6	285	999.7	-0.3
86	1000.2	0.2	186	1000.6	0.6	286	999.7	-0.3
87	1000.4	0.4	187	1000.8	0.8	287	999.9	-0.1
88	1000.4	0.4	188	1000.8	0.8	288	999.9	-0.1
89	1000.6	0.6	189	1000.9	0.9	289	1000.0	0.0
90	1000.9	0.9	190	1001.3	1.3	290	1000.4	0.4
91	1000.4	0.4	191	1000.2	0.2	291	999.5	-0.5
92	1000.2	0.2	192	1000.0	0.0	292	999.5	-0.5
93	1000.4	0.4	193	1000.2	0.2	293	999.7	-0.3
94	1000.4	0.4	194	1000.2	0.2	294	999.7	-0.3
95	1000.4	0.4	195	1000.4	0.4	295	999.7	-0.3
96	1000.6	0.6	196	1000.4	0.4	296	999.7	-0.3
97	1000.6	0.6	197	1000.6	0.6	297	999.9	-0.1
98	1000.6	0.6	198	1000.6	0.6	298	1000.0	0.0
99	1000.6	0.6	199	1000.6	0.6	299	1000.0	0.0
100	1000.6	0.6	200	1000.9	0.9	300	1000.2	0.2

Range for 1000°F Signal: +1.3/-0.5

Allowable range: ±2.3

Within specification for this temperature? Yes

Performed by: Mike Day

Mgr. Fire Resistance — 4/11/05

Title — Date

Approved by:

President — 4/11/05

Title — Date

Channel Verification for Yokogawa 300 Channel

Serial No.: 48JF0082

Calibrator Used: SNT156701

Temperature Setting (°F): 2000.0

Channel No.	Reading (°F)	+/-	Channel No.	Reading (°F)	+/-	Channel No.	Reading (°F)	+/-
1	2000.1	0.1	101	1998.5	-1.5	201	2001.0	1.0
2	1999.9	-0.1	102	2002.1	2.1	202	2001.0	1.0
3	1999.9	-0.1	103	1998.5	-1.5	203	2001.0	1.0
4	1999.9	-0.1	104	1999.9	-0.1	204	2001.0	1.0
5	1999.9	-0.1	105	2000.3	0.3	205	2001.0	1.0
6	2000.1	0.1	106	2000.5	0.5	206	2001.0	1.0
7	2000.1	0.1	107	2000.7	0.7	207	2001.0	1.0
8	2000.1	0.1	108	2000.7	0.7	208	2001.0	1.0
9	2000.1	0.1	109	2000.8	0.8	209	2001.4	1.4
10	2000.7	0.7	110	2001.0	1.0	210	2001.7	1.7
11	1999.6	-0.4	111	2000.5	0.5	211	2000.3	0.3
12	1999.6	-0.4	112	2000.5	0.5	212	2000.3	0.3
13	1999.6	-0.4	113	2000.5	0.5	213	2000.3	0.3
14	1999.6	-0.4	114	2000.7	0.7	214	2000.5	0.5
15	1999.8	-0.2	115	2000.7	0.7	215	2000.5	0.5
16	1999.8	-0.2	116	2000.7	0.7	216	2000.7	0.7
17	1999.8	-0.2	117	2000.7	0.7	217	2000.7	0.7
18	1999.9	-0.1	118	2000.7	0.7	218	2000.7	0.7
19	1999.9	-0.1	119	2000.8	0.8	219	2001.0	1.0
20	2000.3	0.3	120	2001.0	1.0	220	2001.0	1.0
21	1999.9	-0.1	121	2000.7	0.7	221	2000.3	0.3
22	1999.8	-0.2	122	2000.3	0.3	222	2000.3	0.3
23	1999.9	-0.1	123	2000.3	0.3	223	2000.5	0.5
24	1999.9	-0.1	124	2000.5	0.5	224	2000.5	0.5
25	1999.6	-0.4	125	2000.8	0.8	225	2000.5	0.5
26	1999.8	-0.2	126	1999.9	-0.1	226	2000.5	0.5
27	1999.8	-0.2	127	2000.7	0.7	227	2000.7	0.7
28	1999.9	-0.1	128	2000.3	0.3	228	2000.7	0.7
29	1999.9	-0.1	129	2001.7	1.7	229	2000.8	0.8
30	2000.3	0.3	130	1999.6	-0.4	230	2001.0	1.0
31	2000.5	0.5	131	2001.0	1.0	231	2000.5	0.5
32	2000.5	0.5	132	2001.0	1.0	232	2000.5	0.5
33	2000.7	0.7	133	1999.4	-0.6	233	2000.3	0.3
34	2000.7	0.7	134	1999.9	-0.1	234	2000.5	0.5
35	2000.7	0.7	135	1999.9	-0.1	235	2000.5	0.5
36	2000.7	0.7	136	1999.9	-0.1	236	2000.5	0.5
37	2000.7	0.7	137	1999.9	-0.1	237	2000.7	0.7
38	2000.7	0.7	138	2000.1	0.1	238	2000.7	0.7
39	2000.7	0.7	139	2001.7	1.7	239	2000.8	0.8
40	2001.0	1.0	140	2000.7	0.7	240	2001.0	1.0
41	2000.1	0.1	141	1999.9	-0.1	241	2000.1	0.1
42	2000.1	0.1	142	1999.9	-0.1	242	1999.9	-0.1
43	2000.1	0.1	143	1999.9	-0.1	243	1999.9	-0.1
44	2000.1	0.1	144	1999.9	-0.1	244	1999.9	-0.1
45	2000.3	0.3	145	1999.9	-0.1	245	2000.1	0.1
46	2000.1	0.1	146	1999.9	-0.1	246	2000.3	0.3
47	2000.1	0.1	147	2002.6	2.6	247	2000.5	0.5
48	2000.5	0.5	148	2000.3	0.3	248	2000.7	0.7
49	2000.7	0.7	149	1999.9	-0.1	249	2001.0	1.0
50	2000.8	0.8	150	2000.5	0.5	250	2001.2	1.2
51	1999.8	-0.2	151	2000.3	0.3	251	1999.9	-0.1
52	1999.9	-0.1	152	2000.3	0.3	252	1999.9	-0.1
53	1999.9	-0.1	153	2000.1	0.1	253	1999.9	-0.1
54	1999.9	-0.1	154	2000.1	0.1	254	1999.9	-0.1
55	1999.9	-0.1	155	2000.1	0.1	255	2000.3	0.3
56	1999.9	-0.1	156	2000.3	0.3	256	2000.3	0.3

57	1999.9	-0.1	157	2000.5	0.5	257	2000.3	0.3
58	2000.1	0.1	158	2000.3	0.3	258	2000.3	0.3
59	2000.3	0.3	159	2000.7	0.7	259	2000.5	0.5
60	2000.5	0.5	160	2000.8	0.8	260	2000.7	0.7
61	2000.7	0.7	161	2000.3	0.3	261	1999.9	-0.1
62	2000.7	0.7	162	2000.3	0.3	262	1999.9	-0.1
63	2000.7	0.7	163	2000.3	0.3	263	1999.9	-0.1
64	2000.7	0.7	164	2000.5	0.5	264	2000.1	0.1
65	2000.7	0.7	165	2000.5	0.5	265	2000.1	0.1
66	2000.8	0.8	166	2000.5	0.5	266	2000.3	0.3
67	2000.8	0.8	167	2000.5	0.5	267	2000.3	0.3
68	2001.0	1.0	168	2000.5	0.5	268	2000.5	0.5
69	2001.0	1.0	169	2000.7	0.7	269	2000.7	0.7
70	2001.2	1.2	170	2000.8	0.8	270	2001.0	1.0
71	2000.7	0.7	171	1999.6	-0.4	271	1999.8	-0.2
72	2000.7	0.7	172	1999.8	-0.2	272	1999.9	-0.1
73	2000.7	0.7	173	1999.9	-0.1	273	1999.9	-0.1
74	2000.7	0.7	174	1999.9	-0.1	274	1999.9	-0.1
75	2000.5	0.5	175	1999.9	-0.1	275	1999.9	-0.1
76	2000.3	0.3	176	1999.8	-0.2	276	1999.9	-0.1
77	2000.5	0.5	177	1999.9	-0.1	277	1999.9	-0.1
78	2000.5	0.5	178	1999.9	-0.1	278	1999.9	-0.1
79	2000.7	0.7	179	2000.1	0.1	279	2000.1	0.1
80	2000.8	0.8	180	2000.5	0.5	280	2000.5	0.5
81	2000.3	0.3	181	2001.0	1.0	281	1999.2	-0.8
82	2000.3	0.3	182	2001.0	1.0	282	1999.2	-0.8
83	2000.5	0.5	183	2001.0	1.0	283	1999.4	-0.6
84	2000.5	0.5	184	2001.0	1.0	284	1999.4	-0.6
85	2000.5	0.5	185	2001.0	1.0	285	1999.6	-0.4
86	2000.5	0.5	186	2001.2	1.2	286	1999.8	-0.2
87	2000.7	0.7	187	2001.2	1.2	287	1999.8	-0.2
88	2000.5	0.5	188	2001.4	1.4	288	1999.8	-0.2
89	2000.7	0.7	189	2001.6	1.6	289	1999.9	-0.1
90	2000.8	0.8	190	2001.9	1.9	290	2000.1	0.1
91	2000.7	0.7	191	2000.8	0.8	291	1999.2	-0.8
92	2000.5	0.5	192	2000.7	0.7	292	1999.2	-0.8
93	2000.7	0.7	193	2000.7	0.7	293	1999.2	-0.8
94	2000.7	0.7	194	2000.7	0.7	294	1999.2	-0.8
95	2000.7	0.7	195	2000.7	0.7	295	1999.4	-0.6
96	2000.7	0.7	196	2000.8	0.8	296	1999.6	-0.4
97	2000.7	0.7	197	2000.8	0.8	297	1999.8	-0.2
98	2000.7	0.7	198	2001.0	1.0	298	1999.9	-0.1
99	2001.0	1.0	199	2001.0	1.0	299	1999.9	-0.1
100	2001.2	1.2	200	2001.4	1.4	300	2000.1	0.1

Range for 2000°F Signal: **+2.6/-1.5**

Allowable range: ±2.8

Within specification for this temperature? Yes

Performed by: Mike Dey

Mgr. Fire Resistance — 4/11/05

Title — Date

Approved by:

President — 4/11/05

Title — Date

Omega Point Laboratories, Inc.
16015 Shady Falls Road
Elmendorf, Texas 78112
800-966-5253 FAX 210-635-8101

Certificate of Verification

Certification No.: 92150

Verification Date: 04/11/2005

Reverification Date: 010/11/2005

Manufacturer: Yokogawa

Model No.: 100 Channel DAU

Serial No.: 99LE004

Equipment Description: 100 Channel Data Acquisition System with YOKOGAWA Darwin Series

Verification Sources: TEGAM Model 840-A, SN: T-156701
Calibration due 07/26/2005

PERFORMANCE:

Temperature: (75°F) +0.9/-0.2	Temperature: (150°F) +1/-0.1	Temperature: (300°F) +0.9/-0	Temperature: (400°F) +0.8/-0.1	Temperature: (1000°F) +0.8/-0.1	Temperature: (2000°F) +0.8/-0.1

Verification Performed by:

Mike Dey
Manager of Fire Resistance

Verification Approved by:

Deg Priest
President/Chief Technical Officer

Channel Verification for Yokogawa 100 Channel

Serial No.: 99-LE-004

Calibrator Used: SNT156701

Temperature Setting (°F): 75.0

Within specs? (Yes)/No

Performed by: Mike Dey MD

Title: Mgr. Dept. 2

Approved by:

Title: President

Date: 4/11/05

Channel No.	Reading (°F)	+/-	Channel No.	Reading (°F)	+/-
1	75.7	0.7			
2	75.6	0.6			
3	75.4	0.4			
4	75.6	0.6			
5	75.7	0.7			
6	75.4	0.4			
7	75.6	0.6			
8	75.7	0.7			
9	75.7	0.7			
10	75.9	0.9			
11	75.2	0.2			
12	75.2	0.2			
13	75.2	0.2			
14	75.2	0.2			
15	75.2	0.2			
16	75.2	0.2			
17	75.2	0.2			
18	75.2	0.2			
19	75.2	0.2			
20	75.6	0.6			

Range of 75°F Readings: +0.9/0.2

	Lower	Upper	
Allowable limits	73.2	76.8	(±1.8)

Channel Verification for Yokogawa 100 Channel

Serial No.: 99-LE-004

Calibrator Used: SNT156701

Temperature Setting (°F): 150.0

Within specs? Yes/No

Performed by: Mike Dey MD

Title: Mgr. Dept. 2

Approved by:

Title: President

Date: 4/11/05

Channel No.	Reading (°F)	+/-	Channel No.	Reading (°F)	+/-
1	150.8	0.8			
2	150.4	0.4			
3	150.3	0.3			
4	150.4	0.4			
5	150.4	0.4			
6	150.4	0.4			
7	150.4	0.4			
8	150.6	0.6			
9	150.6	0.6			
10	151.0	1.0			
11	150.3	0.3			
12	150.1	0.1			
13	149.9	-0.1			
14	150.1	0.1			
15	150.1	0.1			
16	150.1	0.1			
17	150.1	0.1			
18	150.1	0.1			
19	150.3	0.3			
20	150.6	0.6			

Range of 150°F Readings: +1/-0.1

	Lower	Upper	
Allowable limits	148.2	151.8	(±1.8)

Channel Verification for Yokogawa 100 Channel

Serial No.: 99-LE-004

Calibrator Used: SNT156701

Temperature Setting (°F): 300.0

Within specs? Yes/No

Performed by: Mike Dey MD

Title: Mgr. Dept. 2

Approved by:

Title: President

Date: 4/11/05

Channel No.	Reading (°F)	+/-	Channel No.	Reading (°F)	+/-
1	300.7	0.7			
2	300.6	0.6			
3	300.6	0.6			
4	300.6	0.6			
5	300.6	0.6			
6	300.6	0.6			
7	300.7	0.7			
8	300.6	0.6			
9	300.7	0.7			
10	300.9	0.9			
11	300.2	0.2			
12	300.0	0.0			
13	300.0	0.0			
14	300.0	0.0			
15	300.0	0.0			
16	300.0	0.0			
17	300.2	0.2			
18	300.0	0.0			
19	300.2	0.2			
20	300.7	0.7			

Range of 300°F Readings: +0.9/0

	Lower	Upper	
Allowable limits	298.1	301.9	(±1.9)

Channel Verification for Yokogawa 100 Channel

Serial No.: 99-LE-004

Calibrator Used: SNT156701

Temperature Setting (°F): 400.0

Within specs? (Yes)/No

Performed by: Mike Dey MD

Title: Mgr. Dept. 2

Approved by:

Title: President

Date: 4/11/05

Channel No.	Reading (°F)	+/-	Channel No.	Reading (°F)	+/-
1	400.8	0.8			
2	400.6	0.6			
3	400.5	0.5			
4	400.5	0.5			
5	400.6	0.6			
6	400.6	0.6			
7	400.5	0.5			
8	400.6	0.6			
9	400.8	0.8			
10	400.8	0.8			
11	400.3	0.3			
12	400.1	0.1			
13	400.1	0.1			
14	399.9	-0.1			
15	400.1	0.1			
16	400.1	0.1			
17	399.9	-0.1			
18	400.1	0.1			
19	400.3	0.3			
20	400.5	0.5			

Range of 400°F Readings: +0.8/-0.1

	Lower	Upper	
Allowable limits	398.0	402.0	(±2.0)

Channel Verification for Yokogawa 100 Channel

Serial No.: 99-LE-004

Calibrator Used: SNT156701

Temperature Setting (°F): 1000.0

Within specs? Yes/No

Performed by: Mike Dey MD

Title: Mgr. Dept. 2

Approved by:

Title: President

Date: 4/11/05

Channel No.	Reading (°F)	+/-	Channel No.	Reading (°F)	+/-
1	1000.6	0.6			
2	1000.2	0.2			
3	1000.0	0.0			
4	1000.2	0.2			
5	1000.0	0.0			
6	1000.2	0.2			
7	1000.2	0.2			
8	1000.4	0.4			
9	1000.4	0.4			
10	1000.8	0.8			
11	1000.2	0.2			
12	1000.0	0.0			
13	999.9	-0.1			
14	1000.0	0.0			
15	1000.0	0.0			
16	1000.0	0.0			
17	1000.0	0.0			
18	1000.0	0.0			
19	1000.0	0.0			
20	1000.6	0.6			

Range of 2000°F Readings: +0.8/-0.1

	Lower	Upper	
Allowable limits	997.7	1002.3	(±2.3)

Channel Verification for Yokogawa 100 Channel

Serial No.: 99-LE-004

Calibrator Used: SNT156701

Temperature Setting (°F): 2000.0

Within specs? (Yes)/No

Performed by: Mike Dey

Title: Mgr. Dept. 2

Approved by:

Title: President

Date: 4/11/05

Channel No.	Reading (°F)	+/-	Channel No.	Reading (°F)	+/-
1	2000.3	0.3			
2	2000.3	0.3			
3	2000.1	0.1			
4	2000.1	0.1			
5	2000.3	0.3			
6	2000.3	0.3			
7	2000.1	0.1			
8	2000.3	0.3			
9	2000.3	0.3			
10	2000.7	0.7			
11	2000.5	0.5			
12	2000.3	0.3			
13	2000.5	0.5			
14	2000.3	0.3			
15	2000.3	0.3			
16	2000.5	0.5			
17	2000.3	0.3			
18	2000.5	0.5			
19	2000.7	0.7			
20	2000.8	0.8			

Range of 2000°F Readings: +0.8/0.1

	Lower	Upper	
Allowable limits	1997.2	2002.8	(±2.8)

Omega Point Laboratories, Inc.
16015 Shady Falls Road
Elmendorf, Texas 78112
800-966-5253 FAX 210-635-8101

Certificate of Verification

Certification No.:	92151
Verification Date:	04/11/2005
Reverification Date:	10/11/2005
Manufacturer:	Yokogawa
Model No.:	100 Channel DAU
Serial No.:	99LE006
Equipment Description:	100 Channel Data Acquisition System with YOKOGAWA Darwin Series
Calibration Sources:	TEGAM Model 840-A, SN: T-207318. Calibration due 05/03/2005.

PERFORMANCE:

Temperature: (75°F) +1.8/-0.3	Temperature: (150°F) +1.7/-0.5	Temperature: (300°F) +1.8/-0.5	Temperature: (400°F) +1.9/-0.6	Temperature: (1000°F) +2/-0.5	Temperature: (2000°F) +2.8/-0.8

Verification Performed by:

Mike Dey
Manager of Fire Resistance

Verification Approved by:

Deg Priest
President/Chief Technical Officer

Channel Verification for Yokogawa 100 Channel

Serial No.: 99-LE-006

Within specs? Yes/No

Calibrator Used: T-207318

Performed by: Mike Dey

Title: Mgr. Dept. 2

Temperature Setting (°F): 75.0

Approved by:

Title: President

Date: 4/11/05

Channel No.	Reading (°F)	+/-	Channel No.	Reading (°F)	+/-
1	75.7	0.7	51	74.8	-0.2
2	75.7	0.7	52	75.2	0.2
3	76.1	1.1	53	75.2	0.2
4	76.3	1.3	54	74.7	-0.3
5	75.9	0.9	55	74.7	-0.3
6	75.9	0.9	56	74.7	-0.3
7	76.1	1.1	57	74.7	-0.3
8	76.1	1.1	58	74.7	-0.3
9	76.1	1.1	59	74.7	-0.3
10	76.5	1.5	60	74.8	-0.2
11	76.3	1.3	61	75.9	0.9
12	76.8	1.8	62	76.3	1.3
13	76.6	1.6	63	76.3	1.3
14	75.9	0.9	64	75.7	0.7
15	75.7	0.7	65	75.7	0.7
16	75.7	0.7	66	75.7	0.7
17	75.7	0.7	67	75.9	0.9
18	75.7	0.7	68	75.9	0.9
19	75.7	0.7	69	75.9	0.9
20	76.3	1.3	70	76.5	1.5
21	75.9	0.9	71	75.7	0.7
22	76.3	1.3	72	76.3	1.3
23	76.3	1.3	73	76.3	1.3
24	75.7	0.7	74	75.7	0.7
25	75.6	0.6	75	75.7	0.7
26	75.7	0.7	76	75.7	0.7
27	75.7	0.7	77	75.7	0.7
28	75.7	0.7	78	75.7	0.7
29	75.9	0.9	79	75.9	0.9
30	76.3	1.3	80	76.3	1.3
31	75.7	0.7	81	74.8	-0.2
32	76.5	1.5	82	75.2	0.2
33	76.3	1.3	83	75.4	0.4
34	75.7	0.7	84	75.0	0.0
35	75.6	0.6	85	74.8	-0.2
36	75.6	0.6	86	75.0	0.0
37	75.6	0.6	87	75.2	0.2
38	75.7	0.7	88	75.2	0.2
39	75.7	0.7	89	75.4	0.4
40	75.9	0.9	90	75.7	0.7
41	76.1	1.1	91	74.8	-0.2
42	76.8	1.8	92	75.2	0.2
43	76.8	1.8	93	75.2	0.2
44	75.7	0.7	94	75.0	0.0
45	75.7	0.7	95	75.2	0.2
46	75.7	0.7	96	76.8	1.8
47	75.7	0.7	97	76.8	1.8
48	75.7	0.7	98	76.8	1.8
49	75.7	0.7	99	76.8	1.8
50	76.1	1.1	100	76.8	1.8

		Lower	Upper	
Range of 75°F Readings:	+1.8/-0.3	Allowable limits	73.2	76.8 (±1.8)

Channel Verification for Yokogawa 100 Channel

Serial No.: 99-LE-006

Within specs? Yes/No

Calibrator Used: T-207318

Performed by: Mike Dey

Title: Mgr. Dept. 2

Temperature Setting (°F): 150.0

Approved by:

Title: President

Date: 4/11/05

Channel No.	Reading (°F)	+/-	Channel No.	Reading (°F)	+/-
1	151.5	1.5	51	149.7	-0.3
2	151.5	1.5	52	150.1	0.1
3	151.2	1.2	53	150.3	0.3
4	151.0	1.0	54	149.7	-0.3
5	150.8	0.8	55	149.5	-0.5
6	150.8	0.8	56	149.5	-0.5
7	150.8	0.8	57	149.7	-0.3
8	150.8	0.8	58	149.7	-0.3
9	151.0	1.0	59	149.7	-0.3
10	151.3	1.3	60	149.9	-0.1
11	151.2	1.2	61	150.8	0.8
12	151.5	1.5	62	151.0	1.0
13	151.5	1.5	63	151.2	1.2
14	150.8	0.8	64	150.8	0.8
15	150.8	0.8	65	150.4	0.4
16	150.6	0.6	66	150.6	0.6
17	150.8	0.8	67	150.8	0.8
18	150.6	0.6	68	150.8	0.8
19	150.8	0.8	69	150.8	0.8
20	151.2	1.2	70	151.3	1.3
21	150.8	0.8	71	150.8	0.8
22	151.3	1.3	72	151.0	1.0
23	151.3	1.3	73	151.2	1.2
24	150.8	0.8	74	150.6	0.6
25	150.6	0.6	75	150.4	0.4
26	150.8	0.8	76	150.6	0.6
27	150.8	0.8	77	150.8	0.8
28	150.8	0.8	78	150.8	0.8
29	150.8	0.8	79	150.8	0.8
30	151.2	1.2	80	151.2	1.2
31	150.8	0.8	81	149.7	-0.3
32	151.3	1.3	82	150.3	0.3
33	151.3	1.3	83	150.3	0.3
34	150.6	0.6	84	149.9	-0.1
35	150.4	0.4	85	149.9	-0.1
36	150.4	0.4	86	149.9	-0.1
37	150.6	0.6	87	150.1	0.1
38	150.6	0.6	88	150.3	0.3
39	150.6	0.6	89	150.3	0.3
40	150.8	0.8	90	150.4	0.4
41	151.0	1.0	91	149.7	-0.3
42	151.7	1.7	92	150.1	0.1
43	151.7	1.7	93	150.3	0.3
44	150.8	0.8	94	149.9	-0.1
45	150.8	0.8	95	150.1	0.1
46	150.8	0.8	96	151.7	1.7
47	150.6	0.6	97	151.7	1.7
48	150.8	0.8	98	151.7	1.7
49	150.8	0.8	99	151.6	1.6
50	151.0	1.0	100	151.7	1.7

Range of 150°F Readings: **+1.7/-0.5**

	Lower	Upper	
Allowable limits	148.2	151.8	(±1.8)

Channel Verification for Yokogawa 100 Channel

Serial No.: 99-LE-006

Within specs? Yes/No

Calibrator Used: T-207318

Performed by: Mike Dey

Title: Mgr. Dept. 2

Temperature Setting (°F): 300.0

Approved by:

Title: President

Date: 4/11/05

Channel No.	Reading (°F)	+/-	Channel No.	Reading (°F)	+/-
1	301.6	1.6	51	299.5	-0.5
2	301.8	1.8	52	300.0	0.0
3	301.8	1.8	53	300.0	0.0
4	300.7	0.7	54	299.5	-0.5
5	300.7	0.7	55	299.5	-0.5
6	300.7	0.7	56	299.5	-0.5
7	300.7	0.7	57	299.5	-0.5
8	300.7	0.7	58	299.5	-0.5
9	300.9	0.9	59	299.5	-0.5
10	301.1	1.1	60	299.5	-0.5
11	301.1	1.1	61	300.7	0.7
12	301.6	1.6	62	300.9	0.9
13	301.5	1.5	63	301.1	1.1
14	300.7	0.7	64	300.7	0.7
15	300.7	0.7	65	300.6	0.6
16	300.7	0.7	66	300.6	0.6
17	300.7	0.7	67	300.7	0.7
18	300.7	0.7	68	300.7	0.7
19	300.9	0.9	69	300.7	0.7
20	301.1	1.1	70	301.3	1.3
21	300.9	0.9	71	300.6	0.6
22	301.3	1.3	72	300.9	0.9
23	301.3	1.3	73	301.1	1.1
24	300.7	0.7	74	300.6	0.6
25	300.4	0.4	75	300.2	0.2
26	300.6	0.6	76	300.4	0.4
27	300.7	0.7	77	300.6	0.6
28	300.7	0.7	78	300.6	0.6
29	300.7	0.7	79	300.6	0.6
30	301.3	1.3	80	301.1	1.1
31	300.9	0.9	81	299.7	-0.3
32	301.5	1.5	82	299.8	-0.2
33	301.3	1.3	83	300.0	0.0
34	300.7	0.7	84	299.7	-0.3
35	300.4	0.4	85	299.7	-0.3
36	300.6	0.6	86	299.7	-0.3
37	300.6	0.6	87	299.7	-0.3
38	300.6	0.6	88	299.8	-0.2
39	300.7	0.7	89	300.0	0.0
40	300.9	0.9	90	300.4	0.4
41	300.7	0.7	91	299.5	-0.5
42	301.5	1.5	92	300.0	0.0
43	301.5	1.5	93	300.2	0.2
44	300.6	0.6	94	299.7	-0.3
45	300.4	0.4	95	300.0	0.0
46	300.4	0.4	96	301.6	1.6
47	300.4	0.4	97	301.8	1.8
48	300.4	0.4	98	301.8	1.8
49	300.4	0.4	99	301.8	1.8
50	300.7	0.7	100	301.8	1.8

Range of 300°F Readings: +1.8/-0.5

	Lower	Upper	
Allowable limits	298.1	301.9	(±1.9)

Channel Verification for Yokogawa 100 Channel

Serial No.: 99-LE-006

Within specs? Yes/No

Calibrator Used: T-207318

Performed by: Mike Dey

Title: Mgr. Dept. 2

Temperature Setting (°F): 400.0

Approved by:

Title: President

Date: 4/11/05

Channel No.	Reading (°F)	+/-	Channel No.	Reading (°F)	+/-
1	401.7	1.7	51	399.6	-0.4
2	401.9	1.9	52	400.1	0.1
3	401.9	1.9	53	400.3	0.3
4	401.0	1.0	54	399.6	-0.4
5	400.8	0.8	55	399.6	-0.4
6	400.8	0.8	56	399.6	-0.4
7	400.8	0.8	57	399.4	-0.6
8	400.8	0.8	58	399.6	-0.4
9	401.0	1.0	59	399.6	-0.4
10	401.4	1.4	60	399.6	-0.4
11	401.2	1.2	61	400.8	0.8
12	401.5	1.5	62	401.0	1.0
13	401.5	1.5	63	401.2	1.2
14	400.8	0.8	64	400.6	0.6
15	400.8	0.8	65	400.6	0.6
16	400.6	0.6	66	400.8	0.8
17	400.8	0.8	67	400.8	0.8
18	400.8	0.8	68	400.8	0.8
19	400.8	0.8	69	400.8	0.8
20	401.4	1.4	70	401.4	1.4
21	401.0	1.0	71	400.5	0.5
22	401.4	1.4	72	400.8	0.8
23	401.2	1.2	73	400.8	0.8
24	400.8	0.8	74	400.3	0.3
25	400.8	0.8	75	400.3	0.3
26	400.8	0.8	76	400.3	0.3
27	400.8	0.8	77	400.3	0.3
28	400.8	0.8	78	400.6	0.6
29	400.8	0.8	79	400.6	0.6
30	401.2	1.2	80	401.0	1.0
31	400.8	0.8	81	399.6	-0.4
32	401.4	1.4	82	400.1	0.1
33	401.4	1.4	83	400.1	0.1
34	400.6	0.6	84	399.6	-0.4
35	400.3	0.3	85	399.6	-0.4
36	400.3	0.3	86	399.9	-0.1
37	400.5	0.5	87	399.9	-0.1
38	400.5	0.5	88	400.1	0.1
39	400.5	0.5	89	400.1	0.1
40	400.8	0.8	90	400.3	0.3
41	400.8	0.8	91	399.6	-0.4
42	401.5	1.5	92	400.3	0.3
43	401.7	1.7	93	400.3	0.3
44	400.6	0.6	94	399.9	-0.1
45	400.5	0.5	95	400.3	0.3
46	400.5	0.5	96	400.3	0.3
47	400.5	0.5	97	401.7	1.7
48	400.5	0.5	98	401.7	1.7
49	400.6	0.6	99	401.7	1.7
50	400.8	0.8	100	401.7	1.7

Range of 400°F Readings: +1.9/-0.6

	Lower	Upper	
Allowable limits	398.0	402.0	(±2.0)

Channel Verification for Yokogawa 100 Channel

Serial No.: 99-LE-006

Within specs? Yes/No

Calibrator Used: T-207318

Performed by: Mike Dey
Title: Mgr. Dept. 2

Temperature Setting (°F): 1000.0

Approved by:
Title: President

Date: 4/11/05

Channel No.	Reading (°F)	+/-	Channel No.	Reading (°F)	+/-
1	1001.1	1.1	51	999.7	-0.3
2	1001.5	1.5	52	1000.0	0.0
3	1001.5	1.5	53	1000.0	0.0
4	1000.6	0.6	54	999.7	-0.3
5	1000.6	0.6	55	999.7	-0.3
6	1000.6	0.6	56	999.5	-0.5
7	1000.6	0.6	57	999.7	-0.3
8	1000.6	0.6	58	999.7	-0.3
9	1000.6	0.6	59	999.5	-0.5
10	1000.9	0.9	60	999.7	-0.3
11	1000.9	0.9	61	1000.8	0.8
12	1001.5	1.5	62	1000.9	0.9
13	1001.5	1.5	63	1000.9	0.9
14	1000.8	0.8	64	1000.6	0.6
15	1000.8	0.8	65	1000.6	0.6
16	1000.6	0.6	66	1000.6	0.6
17	1000.6	0.6	67	1000.6	0.6
18	1000.8	0.8	68	1000.8	0.8
19	1000.8	0.8	69	1000.9	0.9
20	1000.9	0.9	70	1000.9	0.9
21	1001.3	1.3	71	1000.4	0.4
22	1001.5	1.5	72	1000.6	0.6
23	1001.5	1.5	73	1000.6	0.6
24	1000.9	0.9	74	1000.0	0.0
25	1000.8	0.8	75	1000.0	0.0
26	1000.9	0.9	76	1000.0	0.0
27	1000.9	0.9	77	1000.2	0.2
28	1000.9	0.9	78	1000.2	0.2
29	1000.9	0.9	79	1000.2	0.2
30	1001.5	1.5	80	1000.8	0.8
31	1000.6	0.6	81	999.7	-0.3
32	1001.1	1.1	82	1000.0	0.0
33	1001.1	1.1	83	1000.0	0.0
34	1000.4	0.4	84	999.7	-0.3
35	1000.2	0.2	85	999.7	-0.3
36	1000.2	0.2	86	999.7	-0.3
37	1000.2	0.2	87	999.9	-0.1
38	1000.4	0.4	88	1000.0	0.0
39	1000.6	0.6	89	1000.0	0.0
40	1000.6	0.6	90	1000.4	0.4
41	1000.6	0.6	91	999.9	-0.1
42	1001.3	1.3	92	1000.0	0.0
43	1001.5	1.5	93	1000.0	0.0
44	1000.4	0.4	94	1000.0	0.0
45	1000.2	0.2	95	1000.0	0.0
46	1000.4	0.4	96	1000.0	0.0
47	1000.2	0.2	97	1001.8	1.8
48	1000.2	0.2	98	1001.8	1.8
49	1000.6	0.6	99	1001.8	1.8
50	1000.6	0.6	100	1002.0	2.0

Range of 2000°F Readings: +2/-0.5

	Lower	Upper	
Allowable limits	997.7	1002.3	(±2.3)

Channel Verification for Yokogawa 100 Channel

Serial No.: 99-LE-006

Within specs? Yes/No

Calibrator Used: T-207318

Performed by: Mike Dey

Title: Mgr. Dept. 2

Temperature Setting (°F): 2000.0

Approved by:

Title: President

Date: 4/11/05

Channel No.	Reading (°F)	+/-	Channel No.	Reading (°F)	+/-
1	2000.7	0.7	51	1999.6	-0.4
2	2001.0	1.0	52	1999.9	-0.1
3	2001.0	1.0	53	2000.1	0.1
4	2000.1	0.1	54	1999.6	-0.4
5	2000.1	0.1	55	1999.4	-0.6
6	1999.9	-0.1	56	1999.4	-0.6
7	1999.9	-0.1	57	1999.4	-0.6
8	2000.3	0.3	58	1999.4	-0.6
9	2000.3	0.3	59	1999.4	-0.6
10	2000.3	0.3	60	1999.9	-0.1
11	2000.8	0.8	61	2000.7	0.7
12	2001.2	1.2	62	2000.7	0.7
13	2001.2	1.2	63	2000.8	0.8
14	2000.5	0.5	64	2000.3	0.3
15	2000.5	0.5	65	2000.3	0.3
16	2000.5	0.5	66	2000.3	0.3
17	2000.3	0.3	67	2000.7	0.7
18	2000.5	0.5	68	2000.7	0.7
19	2000.5	0.5	69	2000.7	0.7
20	2000.7	0.7	70	2001.0	1.0
21	2001.7	1.7	71	1999.9	-0.1
22	2002.5	2.5	72	2000.5	0.5
23	2002.3	2.3	73	2000.5	0.5
24	2001.6	1.6	74	1999.8	-0.2
25	2001.6	1.6	75	1999.9	-0.1
26	2001.6	1.6	76	1999.9	-0.1
27	2001.4	1.4	77	1999.8	-0.2
28	2001.7	1.7	78	1999.9	-0.1
29	2001.7	1.7	79	2000.1	0.1
30	2001.9	1.9	80	2000.5	0.5
31	2000.7	0.7	81	1999.2	-0.8
32	2001.0	1.0	82	1999.9	-0.1
33	2001.0	1.0	83	1999.9	-0.1
34	2000.5	0.5	84	1999.4	-0.6
35	2000.3	0.3	85	1999.4	-0.6
36	2000.3	0.3	86	1999.6	-0.4
37	2000.3	0.3	87	1999.6	-0.4
38	2000.3	0.3	88	1999.8	-0.2
39	2000.7	0.7	89	1999.9	-0.1
40	2000.7	0.7	90	2000.3	0.3
41	2000.5	0.5	91	1999.6	-0.4
42	2001.0	1.0	92	1999.9	-0.1
43	2001.0	1.0	93	2000.3	0.3
44	2000.1	0.1	94	1999.9	-0.1
45	1999.9	-0.1	95	1999.9	-0.1
46	1999.9	-0.1	96	2002.8	2.8
47	1999.9	-0.1	97	2001.7	1.7
48	1999.9	-0.1	98	2001.9	1.9
49	1999.9	-0.1	99	2002.3	2.3
50	2000.5	0.5	100	2002.3	2.3

Range of 2000°F Readings: +2.8/-0.8

	Lower	Upper	
Allowable limits	1997.2	2002.8	(±2.8)

Q/A RECEIVING REPORT

CLIENT/PROJECT NAME Omega Point Labs
CLIENT/PROJECT NUMBER OPL Equipment
RECEIVED FROM SSC Lab Div.
PROJECT LOCATION Omega Point Labs

REPORT NUMBER 2435 - OPL
DATE RECEIVED 5-5-04
DATE INSPECTED 5-6-04
INSPECTED BY:

ITEM DESCRIPTION	P.O . NO.	QUANTITY Order	Rec'd	B.O.	I.D. NO.	CONID MATL Y/N	CERT. REC'D Y/N	SAFETY RELATED Y/N	CONTAINER INTEGRITY	ACCEPTANCE Accept	Hold	Reject	REMARKS
200g Weight	143570	1	1	0	23137	Y	Y	N	Good	X			
200g Weight	143570	1	1	0	23138	Y	Y	N	Good	X			
0-100psi Pressure gage	143570	1	1	0	99LE001	Y	Y	N	Good	X			
0-100psi Pressure gage	143570	1	1	0	98LE001	Y	Y	N	Good	X			
5" dial indicator	143570	1	1	0	013021466	Y	Y	N	Good	X			
0-1000lb. Load Cell	143570	1	1	0	343765	Y	Y	N	Good	X			
6" digital caliper	143570	1	1	0	60246504	Y	Y	N	Good	X			
digital Multimeter	143570	1	1	0	5700109	Y	Y	N	Good	X			

Dial indicator 5". SN: 013232851 was beyond repair - see memo.

09-016-11/02

OMEGA POINT LABORATORIES
16015 SHADY FALLS RD.
ELMENDORF, TEXAS 78112
PH. (210) 635-8100
FAX (210) 635-8101

PURCHASE ORDER

14357Q

Date: 04/19/2004
Page: 1 of 1

Order From:
SSC Lab Division
7715 Distribution Dr.
Little Rock
AR 72209
501-562-2900/888-278-9292

Deliver to:
Omega Point Laboratories, Inc
16015 Shady Falls Road
Elmendorf
TX 78112
(210) 635-8100

Vendor No:

Your Item Number / Item Description	Our Reference	Qty Ordered	Units	Unit Cost	Extension
0-100psi Pressure Gage SN:99LE001	001	1.00	Each	$45.00	$45.00
0-100psi Pressure Gage SN: 98LE001	002	1.00	Each	$75.00	$75.00
Dial Indicator SN: 013021466	003	1.00	Each	$20.00	$20.00
Dial Indicator SN: 013232851 **Calibration&Repair**	004	1.00	Each	$120.00	$120.00
Load Cell 1k pound SN: 343765 **Calibration & Repair**	005	1.00	Each	$175.00	$175.00
Digital Multimeter SN: 5700109 **Calibration & Repair**	006	1.00	Each	$100.00	$100.00
Digital Caliper SN:6Q-2465-04	007	1.00	Each	$70.00	$70.00
200g Weight—SN: 23137	008	1.00	Each	$10.00	$10.00
200g Weight—SN: 23138	009	1.00	Each	$10.00	$10.00

CALIBRATION CERT. REQUIREMENTS
1. Statement of NIST traceability
2. NIST test or I.D. number
3. As Found
4. As Left Values
5. Uncertainties of calibration measurements
6. Calibration data
7. Calibration certificates must show accreditation to ISO/IEC 17025

"See Special Instructions Regarding Purchasing Specifications for Quality Assurance Requirements."
QA Approval
Date 4-19-04

Please Quote Purchase Order Number on all correspondence.

Special Instructions: Please include Certificate of Conformance to attached Specification Sheet and Calibration Data traceable to NIST.

Subtotal:	$620.00
Freight:	0.00
Tax Amount:	0.00
Total Value:	$620.00

0806

VENDOR PURCHASING SPECIFICATION AND QUALITY ASSURANCE REQUIREMENTS

Vendor: SSC Lab-Division
Purchase Order No. 14357 Q

Any of the following Quality Assurance requirements shall be incorporated as conditions to this procurement when corresponding box is marked. Failure to comply with any requirement specified may result in rejection and/or return of shipment at seller's expense.

1.0 QUALITY PROGRAM

☒ Seller shall furnish all items on this Purchase Order in accordance with Quality Program approved by Buyer.

2.0 Quality Verification

When additional quality verification activities are required as a condition to this procurement, invoices will not be paid until satisfactory completion of such activities.

☒ Receiving Inspection- Buyer shall inspect items upon receipt to verify compliance with purchase order requirements. Rejected items shall be returned at seller's expense.

☐ Independent Laboratory Tests- Samples of materials furnished shall be tested independently for conformance to specification requirements prior to final acceptance. Rejected materials shall be returned at seller's expense.

☒ Document Review- Final acceptance shall be based on satisfactory review or required certifications and other supporting documents.

3.0 CERTIFICATIONS

When certifications are required as a condition to this procurement, the seller shall furnish one reproducible copy either with or prior to each shipment. Shipments will not be accepted and invoices will not be paid until certifications are in buyer's possession.

☐ Certificate of Compliance/Conformance Required – Certification that materials and /or services comply with purchase order requirements. Certification shall reference purchase order number and traceability numbers (when applicable).

☐ Certified Test Report Required – Certification that material complies with applicable material specification (s) and the purchase order. Include actual results of required tests.

☒ Certificate of Calibration Required - Certification shall be traceable to National Bureau of Standards. (NIST, Nat'l Inst. of Science & Technology).

4.0 AUDITS/RIGHT OF ACCESS

☒ The buyer reserves the right to audit your facility to verify compliance with purchase order, code and specification requirements with (10) days notice,

☒ Shipments shall only originate form facilities approved by the buyer.

☐ Buyer reserves the right to inspect any or all work included in this order at seller's facility with as early notice as practicable.

5.0 IDENTIFICATION

☐ Seller shall identify each item with a unique traceability number by physical marking or tagging. Traceability numbers shall be traceable to certifications and packing lists.

☒ Seller shall identify each container with a unique identification number. The identification number shall be traceable to certifications and packing lists.

6.0 10CFR,PART 21

☐ The material, equipment and/or services to be furnished under this purchase order are involved in the testing of basic components of a Nuclear Regulatory Commission (NRC) licensed facility. Accordingly, the seller is subject to the provisions of 10 CFR, Part 21 (Reporting of Defects and Noncompliance)

7.0 PACKING/SHIPPING

☒ All materials shall be packaged in air tight, moisture free containers and shall be free from all foreign substance such as dirt, oil, grease or other deleterious material.

☐ All materials and equipment shall be suitable crated, boxed or otherwise prepared for shipment to prevent damage during handling and shipping. Wherever practical, equipment shall be palletized for ease of unloading and storage at destination. Each container shall be clearly marked with buyer's purchase order number.

QUALITY ASSURANCE APPROVAL _____ DATE 4/19/04

SSC LAB DIVISION
a Division of System Scale Corporation
Employee Owned
"Quality You Can Measure"

CERTIFICATE NO: 36283-0003

ACCREDITED
Cert. #1754.01
Calibration Laboratory
ISO / IEC / 17025

CERTIFICATE OF CALIBRATION

SSC LAB DIVISION certifies that this instrument conforms to original manufacturers specifications or to tolerances indicated below and has been calibrated using standards with accuracies traceable to a National Measurement Institute, or to accepted values of natural physical constants, or have been derived by ratio techniques. This certificate complies with ISO / IEC 17025 & ANSI Z540. Unless otherwise stated, the M & T E for which this certificate is issued, based on interpretation of data, was found to meet the required specification. Reported uncertainty represents expanded uncertainty at approximately 95% confidence level, coverage factor of k=2.

Customer:	OMEGA POINT LAB.	Date Received:	4/21/04
Location:	16015 SHADY FALLS RD. ELMENDORF TX 78112	Date of Issue/Calibration:	04/22/2004
		Next Calibration Due:	04/22/2005
P.O. #:	14357Q	Metrologist:	Sean Rainey

Manufacturer:	McDANIEL CONTROLS INC.	Model:	316SS
Nomenclature:	GAGE- PRESSURE	Serial Number:	99LE001
Range:	0-100 PSI	Equipment ID:	99LE001

Calibration Data Temp 68°F Humidity 38%

Calibration Accuracy: ± 2.5% FULL SCALE

Note: if the AS LEFT column is blank, no adjustments were required.

Note: Many factors may cause out of calibration condition prior to due date.The Calibration interval has been specified by the Customer. Current procedures and methods utilized by SSC Lab Division are approved by the Customer.

APPLIED	AS FOUND	AS LEFT	UNCERTAINTY	PROCEDURE #
25 LBS	25.78	25.78	2.9	NA17-20MP-06
50 LBS	51.24	51.24	2.9	
75 LBS	76.38	76.38	2.9	
100 LBS	101.72	101.72	2.9	

STANDARDS(S) USED

Identification Number	Description	Calibration Date	Expiration Date	Traceability Number
SSC30LD029	CALIBRATOR- PRESSURE	7/30/2003	7/30/2004	33426-0044
SSC30LD048	TRANSDUCER- PRESSURE	8/11/2003	8/11/2004	1000154760

Calibration Certificate Acceptance
Item 0-100 psi Pressure Gage
SN 99LE001

	Q/A	Eng.
NIST Traceability Adequate		
As Found/As Left Values		
Calibration Data Sufficient		
Tolerance Range Adequate		
Date of Review:	5-6-04	5/6/04

OPL QA/QC Dept. Eng. Dept. Mgr.

Gary McCourt
Chief Metrology Engineer

Comments

This certificate may not be reproduced, except in full, without the written consent of SSC Lab Division.

Q/A RECEIVING REPORT

CLIENT/PROJECT NAME Omega Point Labs
CLIENT/PROJECT NUMBER OPL Equipment
RECEIVED FROM PMC
PROJECT LOCATION Omega Point Labs

REPORT NUMBER 2676 - OPL
DATE RECEIVED 10-25-04
DATE INSPECTED 10-25-04
INSPECTED BY: [signature]

ITEM DESCRIPTION	P.O . NO.	QUANTITY Order	QUANTITY Rec'd	QUANTITY B.O.	I.D. NO.	CON'tD MATL Y/N	CERT REC'D Y/N	SAFETY RELATED Y/N	CONTAINER INTEGRITY	ACCEPTANCE Accept	ACCEPTANCE Hold	ACCEPTANCE Reject	REMARKS
Fiberglass	14561Q	15K'	12K'	Q	KK-FB/FB-24 Fiberglass	Y	Y	N	Good	X			Received 3K' on 9/27/04. RA#2472 This shipment Spool# 00565655, 00565656, 00565657 and 00565658 and 00565660. P.O. Complete.
TC Wire													

Page 422

09-016-11/02

OMEGA POINT LABORATORIES
16015 SHADY FALLS RD.
ELMENDORF, TEXAS 78112
PH. (210) 635-8100
FAX (210) 635-8101

PURCHASE ORDER

14561Q

Date: 09/16/2004
Page: 1 of 1

Order From: PMC
680 Hayward Street
Manchester
NH 03103
603-622-3500

Deliver to: Omega Point Laboratories, Inc
16015 Shady Falls Road
Elmendorf
TX 78112
(210) 635-8100

Vendor No: 0024

Your Item Number / Item Description	Our Reference	Qty Ordered	Units	Unit Cost	Extension
Fiberglass TC Wire KK-FB/FB-24	001	15,000	Feet	$218.00	$3270.00
Calibration Services	002	1.00	Each	$207.00	$207.00

Received 3,140 feet 9-27-04

"See Special Instructions Regarding Purchasing Specifications for Quality Assurance Requirements."
QA Approval
Date 9-16-04

Please Quote Purchase Order Number on all correspondence.

Special Instructions: Please include Certificate of Conformance to attached Specification Sheet and Calibration Data traceable to NIST.

Subtotal:	$3477.00
Freight:	0.00
Tax Amount:	0.00
Total Value:	$3477.00

080625/1

OMEGA POINT LABORATORIES
MATERIAL PURCHASING SPECIFICATIONS

SPECIFICATION NUMBER: MS-14561Q-OPL

VENDOR: PMC Corporation

ITEM NO.	VENDOR PRODUCT NUMBER	PRODUCT DESCRIPTION
_____	KK-TA/TA-24	Teflon Coated Thermocouple Wire
1.	KK-FB/FB-24	Fiberglas Braided Thermocouple Wire
_____	KK-TE/TE-24	FEP Insulated Thermocouple Wire

Material as defined above shall be provided in accordance with the Critical Characteristics as listed below:

TEST	DESCRIPTION	SPECIFICATION RANGES MIN. - MAX.
ASTM E220-96	Std. Test Method for Calibration of Thermocouples by Comparison	Temp. Range +32°F to +545°F Special Limits of Error ± 2% °F
	(Chromel/Alumel wire alloy)	Temp. Range +545°F to +2300°F Special Limits of Error ± .4%
ASTM E220-96	Std. Test Method for Calibration of Thermocouples by Comparison	Temp. Range -85°F to +270°F Special Limits of Error ±.9%°F
	(Copper/Constantan wire alloy)	Temp. Range +270°F to +660°F Special Limits of Error ±.4%

QUALITY ASSURANCE REQUIREMENTS

1.0 QUALITY PROGRAM

Seller shall furnish this item in accordance with Quality Program approved by Omega Point Laboratories. Material specified herein is to be produced and tested in accordance with vendor quality standards, methods, guidelines and manufacturing instructions as defined in that Quality Program.

2.0 QUALITY VERIFICATION

Receiving Inspection - Buyer shall inspect items upon receipt to verify compliance with purchase order requirements. Rejected items shall be returned at seller's expense.

Document Review - Final acceptance shall be based on satisfactory review of required certifications and/or supporting documents.

3.0 CERTIFICATIONS

3.1 Certification that supplied materials comply with this material specification and listing Critical Characteristics shall be provided. This certificates shall reference Omega Point Labs purchase order number and specification number for all material furnished under this specification. This Certification shall be signed by the appropriate vendor representative.

3.2 The material furnished under this specification shall be a product that complies with the following:

3.2.1 Has been tested and passed all tests specified herein.

3.2.2 Manufacturing methods for this material have not changed. Vendor will advise Omega Point in writing of any changes in the manufacturing prior to material manufacture.

3.2.3 Raw materials used in the manufacture of this material meet Vendor specifications.

4.0 AUDITS/RIGHTS OF ACCESS

Omega Point Labs reserves the right to audit your facility to verify compliance with the purchase order and specification requirements with a minimum ten (10) day notice.

5.0 IDENTIFICATION

Seller shall identify each item with a unique traceability number by physical marking or tagging. These identification numbers shall be traceable to certifications and packing lists.

6.0 PACKING/SHIPPING

All materials shall be packaged in air tight, moisture free containers and shall be free of foreign substances such as dirt, oil, grease or other deleterious materials.

All materials shall be suitably crated, boxed or otherwise prepared for shipment to prevent damage during handling and shipping.

QUALITY ASSURANCE APPROVAL:

Title QA Assistant

Date 9-16-04

AVL Verification

Class: A

PMC A DIVISION OF ROCKBESTOS-SURPRENANT CABLE CORPORATION
680 HAYWARD STREET, MANCHESTER, NH 03103 (603) 622-3500
SPECIALIZING IN WIRE & CABLE FOR THE SENSOR INDUSTRY FAX (800) 639-5701

CERTIFICATE OF CALIBRATION

SPOOL # 00565655

TO: OMEGA POINT LABS, INC.
16015 SHADY FALLS ROAD
ELMENDORF,TX 78112
USA

Date: 10/16/04
Cust PO#: 14561Q
JOB # PSO067407-3

CALIBRATION RESULTS ARE TRACEABLE TO THE NATIONAL INSTITUTE OF STANDARDS AND TECHNOLOGY (NIST) AND MEET SPECIAL LIMITS DEVIATION TOLERANCES AS DEFINED IN ISA MC96.1 (FORMERLY ANSI) AND ASTM E 230-03. MS-14561Q-OPL.

TEST RESULTS FOR: PMC P/N: KK-FB/FB-24 Total Footage: 1520'

Test Temperature (°F)	Inside End	Outside End
200°	-1.3	-0.8
400°	-1.2	-1.7
600°	-2.0	-1.2
800°	-2.0	-1.5
1000°	+0.9	+1.4

Calibration Certificate Acceptance
Item Fiberglass TC Wire
SN 00565655
NIST Traceability Adequate QA Eng.
As Found / As left Values QA Eng.
Calibration Date Sufficient QA Eng.
Tolerance Range Adequate QA Eng.
Date of Review QA 10-25-04 Eng. 10-26-04
OPL QA/QC Dept. Eng./Dept. Mgr.

REPORTED RESULTS ARE DEVIATIONS FROM TEST TEMPERATURES. FOR CORRECTION FACTORS REVERSE THE SIGNS.

THE MATERIAL REFERENCED ABOVE HAS BEEN CALIBRATED UTILIZING TECHNIQUES CONSISTENT WITH THE GUIDELINES SET FORTH IN ANSI Z540-1 AND ASTM E-220-02. THIS IS TO CERTIFY THE MATERIAL FURNISHED ON THIS SHIPMENT ARE IN CONFORMANCE WITH THE REQUIREMENTS, SPECIFICATIONS, AND DRAWINGS OF THE ABOVE REFERENCED CUSTOMER PURCHASE ORDER. INSPECTION AND TEST RECORDS ARE ON FILE AND AVAILABLE FOR CUSTOMER REVIEW.

SECONDARY STANDARD THERMOCOUPLE: TYPE K
REEL # POS LEG: 00534834
REEL # NEG LEG: 00534833
CALIBRATION DATE: 3/17/00

NIST #: 263094C&A
263094B&D
(SINGLE USE THERMOCOUPLE FROM CALIBRATED REEL)

DIGITAL VOLT METER
MODEL: KAYE INSTRUMENTS: X1525S
SERIAL # 306172
CALIBRATION DUE DATE: 01/30/2005

EDC 100RC SERIAL # 15075
NIST # 811/267966-03
DUE : 12/17/2005

ICE POINT THERMOCOUPLE REFERENCE
MODEL, KAYE INSTRUMENTS: K-170-SP
SERIAL #: 306179
CALIBRATION DUE DATE: 01/30/2005

TYPE T STANDARD
REEL # 25926 & 26369
NIST # 258779B

Janice Rossell 10-16-04
QUALITY ASSURANCE TECHNICIAN DATE

PMC A DIVISION OF ROCKBESTOS-SURPRENANT CABLE CORPORATION
680 HAYWARD STREET, MANCHESTER, NH 03103 (603) 622-3500
SPECIALIZING IN WIRE & CABLE FOR THE SENSOR INDUSTRY FAX (800) 639-5701

CERTIFICATE OF CALIBRATION

SPOOL # 00565656

TO: OMEGA POINT LABS, INC.
16015 SHADY FALLS ROAD
ELMENDORF,TX 78112
USA

Date: 10/16/04
Cust PO#: 14561Q
JOB # PSO067407-3

CALIBRATION RESULTS ARE TRACEABLE TO THE NATIONAL INSTITUTE OF STANDARDS AND TECHNOLOGY (NIST) AND MEET SPECIAL LIMITS DEVIATION TOLERANCES AS DEFINED IN ISA MC96.1 (FORMERLY ANSI) AND ASTM E 230-03. MS-14561Q-OPL.

TEST RESULTS FOR: PMC P/N: KK-FB/FB-24 Total Footage: 1555'

Test Temperature (°F)	Inside End	Outside End
200°	-1.4	-0.9
400°	-1.2	-1.7
600°	-2.0	-1.7
800°	-2.0	-1.6
1000°	+0.9	+1.8

Calibration Certificate Acceptance
Item Fiberglass TC Wire
SN 00565656
NIST Traceability Adequate QA Eng.
As Found / As left Values QA Eng.
Calibration Date Sufficient QA Eng.
Tolerance Range Adequate QA Eng.
Date of Review QA 10-25-04 Eng. 10/26/04
OPL QA/QC Dept. Eng./Dept. Mgr.

REPORTED RESULTS ARE DEVIATIONS FROM TEST TEMPERATURES. FOR CORRECTION FACTORS REVERSE THE SIGNS.

THE MATERIAL REFERENCED ABOVE HAS BEEN CALIBRATED UTILIZING TECHNIQUES CONSISTENT WITH THE GUIDELINES SET FORTH IN ANSI Z540-1 AND ASTM E-220-02. THIS IS TO CERTIFY THE MATERIAL FURNISHED ON THIS SHIPMENT ARE IN CONFORMANCE WITH THE REQUIREMENTS, SPECIFICATIONS, AND DRAWINGS OF THE ABOVE REFERENCED CUSTOMER PURCHASE ORDER. INSPECTION AND TEST RECORDS ARE ON FILE AND AVAILABLE FOR CUSTOMER REVIEW.

SECONDARY STANDARD THERMOCOUPLE: TYPE K
REEL # POS LEG: 00534834
REEL # NEG LEG: 00534833
CALIBRATION DATE: 3/17/00

NIST #: 263094C&A
263094B&D
(SINGLE USE THERMOCOUPLE FROM CALIBRATED REEL)

EDC 100RC SERIAL # 15075
NIST # 811/267966-03
DUE : 12/17/2005

DIGITAL VOLT METER
MODEL: KAYE INSTRUMENTS: X1525S
SERIAL # 306172
CALIBRATION DUE DATE: 01/30/2005

TYPE T STANDARD
REEL # 25926 & 26369
NIST # 258779B

ICE POINT THERMOCOUPLE REFERENCE
MODEL, KAYE INSTRUMENTS: K-170-SP
SERIAL #: 306179
CALIBRATION DUE DATE: 01/30/2005

10-16-04
QUALITY ASSURANCE TECHNICIAN DATE

PMC A DIVISION OF ROCKBESTOS-SURPRENANT CABLE CORPORATION
680 HAYWARD STREET, MANCHESTER, NH 03103 (603) 622-3500
SPECIALIZING IN WIRE & CABLE FOR THE SENSOR INDUSTRY FAX (800) 639-5701

CERTIFICATE OF CALIBRATION

SPOOL # 00565657

TO: OMEGA POINT LABS, INC.
16015 SHADY FALLS ROAD
ELMENDORF,TX 78112
USA

Date: 10/16/04
Cust PO#: 14561Q
JOB # PSO067407-3

CALIBRATION RESULTS ARE TRACEABLE TO THE NATIONAL INSTITUTE OF STANDARDS AND TECHNOLOGY (NIST) AND MEET SPECIAL LIMITS DEVIATION TOLERANCES AS DEFINED IN ISA MC96.1 (FORMERLY ANSI) AND ASTM E 230-03. MS-14561Q-OPL.

TEST RESULTS FOR: PMC P/N: KK-FB/FB-24 Total Footage: 1315'

Test Temperature (°F)	Inside End	Outside End
200°	-1.1	-0.3
400°	-1.0	-1.9
600°	-2.3	-1.3
800°	-2.3	-1.9
1000°	+0.5	+1.1

Calibration Certificate Acceptance
Item Fiberglass TC Wire
SN 00565657
NIST Traceability Adequate QA Eng.
As Found / As left Values QA Eng.
Calibration Date Sufficient QA Eng.
Tolerance Range Adequate QA Eng.
Date of Review QA 10-25-04 Eng. 10/26/04
OPL QA/QC Dept. Eng./Dept. Mgr.

REPORTED RESULTS ARE DEVIATIONS FROM TEST TEMPERATURES. FOR CORRECTION FACTORS REVERSE THE SIGNS.

THE MATERIAL REFERENCED ABOVE HAS BEEN CALIBRATED UTILIZING TECHNIQUES CONSISTENT WITH THE GUIDELINES SET FORTH IN ANSI Z540-1 AND ASTM E-220-02. THIS IS TO CERTIFY THE MATERIAL FURNISHED ON THIS SHIPMENT ARE IN CONFORMANCE WITH THE REQUIREMENTS, SPECIFICATIONS, AND DRAWINGS OF THE ABOVE REFERENCED CUSTOMER PURCHASE ORDER. INSPECTION AND TEST RECORDS ARE ON FILE AND AVAILABLE FOR CUSTOMER REVIEW.

SECONDARY STANDARD THERMOCOUPLE: TYPE K
REEL # POS LEG: 00534834
REEL # NEG LEG: 00534833
CALIBRATION DATE: 3/17/00

NIST #: 263094C&A
263094B&D
(SINGLE USE THERMOCOUPLE FROM CALIBRATED REEL)

DIGITAL VOLT METER
MODEL: KAYE INSTRUMENTS: X1525S
SERIAL # 306172
CALIBRATION DUE DATE: 01/30/2005

EDC 100RC SERIAL # 15075
NIST # 811/267966-03
DUE : 12/17/2005

ICE POINT THERMOCOUPLE REFERENCE
MODEL, KAYE INSTRUMENTS: K-170-SP
SERIAL #: 306179
CALIBRATION DUE DATE: 01/30/2005

TYPE T STANDARD
REEL # 25926 & 26369
NIST # 258779B

Laura Roberts 10-16-04
QUALITY ASSURANCE TECHNICIAN DATE

PMC A DIVISION OF ROCKBESTOS-SURPRENANT CABLE CORPORATION
680 HAYWARD STREET, MANCHESTER, NH 03103 (603) 622-3500
SPECIALIZING IN WIRE & CABLE FOR THE SENSOR INDUSTRY FAX (800) 639-5701

CERTIFICATE OF CALIBRATION

SPOOL # 00565658

TO: OMEGA POINT LABS, INC.
16015 SHADY FALLS ROAD
ELMENDORF,TX 78112
USA

Date: 10/16/04
Cust PO#: 14561Q
JOB # PSO067407-3

CALIBRATION RESULTS ARE TRACEABLE TO THE NATIONAL INSTITUTE OF STANDARDS AND TECHNOLOGY (NIST) AND MEET SPECIAL LIMITS DEVIATION TOLERANCES AS DEFINED IN ISA MC96.1 (FORMERLY ANSI) AND ASTM E 230-03. MS-14561Q-OPL.

TEST RESULTS FOR: PMC P/N: KK-FB/FB-24 Total Footage: 3685'

Test Temperature (°F)	Inside End	Outside End
200°	-1.5	-0.6
400°	-1.9	-0.8
600°	-2.0	-1.4
800°	-1.9	-0.8
1000°	+0.1	+1.2

Calibration Certificate Acceptance
Item Fiberglass TC Wire
SN 00565658
NIST Traceability Adequate QA Eng.
As Found / As left Values QA Eng.
Calibration Date Sufficient QA Eng.
Tolerance Range Adequate QA Eng.
Date of Review QA 10-25-04 Eng. 10/26/04
OPL QA/QC Dept. Eng./Dept. Mgr.

REPORTED RESULTS ARE DEVIATIONS FROM TEST TEMPERATURES. FOR CORRECTION FACTORS REVERSE THE SIGNS.

THE MATERIAL REFERENCED ABOVE HAS BEEN CALIBRATED UTILIZING TECHNIQUES CONSISTENT WITH THE GUIDELINES SET FORTH IN ANSI Z540-1 AND ASTM E-220-02. THIS IS TO CERTIFY THE MATERIAL FURNISHED ON THIS SHIPMENT ARE IN CONFORMANCE WITH THE REQUIREMENTS, SPECIFICATIONS, AND DRAWINGS OF THE ABOVE REFERENCED CUSTOMER PURCHASE ORDER. INSPECTION AND TEST RECORDS ARE ON FILE AND AVAILABLE FOR CUSTOMER REVIEW.

SECONDARY STANDARD THERMOCOUPLE: TYPE K
REEL # POS LEG: 00534834
REEL # NEG LEG: 00534833
CALIBRATION DATE: 3/17/00

NIST #: 263094C&A
263094B&D
(SINGLE USE THERMOCOUPLE FROM CALIBRATED REEL)

DIGITAL VOLT METER
MODEL: KAYE INSTRUMENTS: X1525S
SERIAL # 306172
CALIBRATION DUE DATE: 01/30/2005

EDC 100RC SERIAL # 15075
NIST # 811/267966-03
DUE : 12/17/2005

ICE POINT THERMOCOUPLE REFERENCE
MODEL, KAYE INSTRUMENTS: K-170-SP
SERIAL #: 306179
CALIBRATION DUE DATE: 01/30/2005

TYPE T STANDARD
REEL # 25926 & 26369
NIST # 258779B

Janice Roberts 10-16-04
QUALITY ASSURANCE TECHNICIAN DATE

PMC A DIVISION OF ROCKBESTOS-SURPRENANT CABLE CORPORATION
680 HAYWARD STREET, MANCHESTER, NH 03103 (603) 622-3500
SPECIALIZING IN WIRE & CABLE FOR THE SENSOR INDUSTRY FAX (800) 639-5701

CERTIFICATE OF CALIBRATION

SPOOL # 00565660

TO: OMEGA POINT LABS, INC.
16015 SHADY FALLS ROAD
ELMENDORF,TX 78112
USA

Date: 10/16/04
Cust PO#: 14561Q
JOB # PSO067407-3

CALIBRATION RESULTS ARE TRACEABLE TO THE NATIONAL INSTITUTE OF STANDARDS AND TECHNOLOGY (NIST) AND MEET SPECIAL LIMITS DEVIATION TOLERANCES AS DEFINED IN ISA MC96.1 (FORMERLY ANSI) AND ASTM E 230-03. MS-14561Q-OPL.

TEST RESULTS FOR: PMC P/N: KK-FB/FB-24 Total Footage: 4400'

Test Temperature (°F)	Inside End	Outside End
200°	-1.2	-0.4
400°	-1.5	-1.0
600°	-2.1	-1.7
800°	-2.1	-1.0
1000°	+0.5	+1.6

Calibration Certificate Acceptance
Item Fiberglass TC Wire
SN 00565660
NIST Traceability Adequate QA [illegible] Eng. [illegible]
As Found / As left Values QA [illegible] Eng. [illegible]
Calibration Date Sufficient QA [illegible] Eng. [illegible]
Tolerance Range Adequate QA [illegible] Eng. [illegible]
Date of Review QA 10-25-04 Eng. 10/26/04
OPL QA/QC Dept. Eng./Dept. Mgt.

REPORTED RESULTS ARE DEVIATIONS FROM TEST TEMPERATURES. FOR CORRECTION FACTORS REVERSE THE SIGNS.

THE MATERIAL REFERENCED ABOVE HAS BEEN CALIBRATED UTILIZING TECHNIQUES CONSISTENT WITH THE GUIDELINES SET FORTH IN ANSI Z540-1 AND ASTM E-220-02. THIS IS TO CERTIFY THE MATERIAL FURNISHED ON THIS SHIPMENT ARE IN CONFORMANCE WITH THE REQUIREMENTS, SPECIFICATIONS, AND DRAWINGS OF THE ABOVE REFERENCED CUSTOMER PURCHASE ORDER. INSPECTION AND TEST RECORDS ARE ON FILE AND AVAILABLE FOR CUSTOMER REVIEW.

SECONDARY STANDARD THERMOCOUPLE: TYPE K
REEL # POS LEG: 00534834
REEL # NEG LEG: 00534833
CALIBRATION DATE: 3/17/00

NIST #: 263094C&A
263094B&D
(SINGLE USE THERMOCOUPLE FROM CALIBRATED REEL)

EDC 100RC SERIAL # 15075
NIST # 811/267966-03
DUE : 12/17/2005

DIGITAL VOLT METER
MODEL: KAYE INSTRUMENTS: X1525S
SERIAL # 306172
CALIBRATION DUE DATE: 01/30/2005

ICE POINT THERMOCOUPLE REFERENCE
MODEL, KAYE INSTRUMENTS: K-170-SP
SERIAL #: 306179
CALIBRATION DUE DATE: 01/30/2005

TYPE T STANDARD
REEL # 25926 & 26369
NIST # 258779B

[signature] 10-16-04
QUALITY ASSURANCE TECHNICIAN DATE

PMC Division of RSCC
680 Hayward Street
Manchester, NH 03103
Tel : (603) 622-3500 Fax : (603) 622-7023
SPECIALIZING IN WIRE & CABLE FOR THE SENSOR INDUSTRY

DELIVERY NOTE

DELIVERY TO

OMEGA POINT LABS
16015 SHADY FALLS ROAD
ELMENDORF, TX 78112
USA

Attention: CLEDA

SHIPMENT :	OUR ORDER :	DATE :	CUSTOMER PO :	CONTACT :
0000146332	PSO067407	Oct 18 2004	14561Q	CLEDA
ACCOUNT :	**FOB :**	**SHIP VIA :**	**TRACKER# :**	**PAGE :**
OMEG01	Manchester,NH	UPS GROUND		1

LINE	ITEM	UOM	QTY	QTY SHIPPED	QTY B/O
003	KK-FB/FB-24 Spool #: 00565655 00565656 00565657 00565658 00565660	MFT	12,000	12,475	0
004	CALIBRATION CHARGE Spool #:	EACH	1	1	0

Q/A RECEIVING REPORT

CLIENT/PROJECT NAME Sandia National Labs
CLIENT/PROJECT NUMBER 14790-123263-264+265
RECEIVED FROM Texas Specialty Steel
PROJECT LOCATION Omega Point Labs

REPORT NUMBER 2689 - 14790
DATE RECEIVED 1-5-05
DATE INSPECTED 1-5-05
INSPECTED BY:

ITEM DESCRIPTION	P.O . NO.	QUANTITY Order	Rec'd	B.O.	I.D. NO.	CON'tD MATL Y/N	CERT REC'D Y/N	SAFETY RELATED Y/N	CONTAINER INTEGRITY	ACCEPTANCE Accept	Hold	Reject	REMARKS
C Channel	146740	30	30	0	C4X5.4	Y	Y	N	GOOD	X			
4X5.4													
C Channel	146740	10	10	0	C5X6.7	Y	X	N	GOOD	X			
4X6.7													
~~Hot~~ Rolled Steel	146740	12	12	0	10GA X 72.000"	Y	Y	N	GOOD	X			
10ga, X (Sheets)													
144"													

OMEGA POINT LABORATORIES
16015 SHADY FALLS RD.
ELMENDORF, TEXAS 78112
PH. (210) 635-8100
FAX (210) 635-8101

PURCHASE ORDER
14674Q

Date: 01/04/2005
Page: 1 of 1

Order From: Texas Specialty Steel
12270 Hwy. 181 S
San Antonio
TX 78223
210-633-0047

Deliver to: Omega Point Laboratories, Inc
16015 Shady Falls Road
Elmendorf
TX 78112
(210) 635-8100

Vendor No:

Your Item Number / Item Description	Our Reference	Qty Ordered	Units	Unit Cost	Extension
C Channel C4x5.4x20'	001	10	Each	$44.55	$445.50
C Channel C5x6.7x20'	002	30	Each	$55.28	$1,658.40
10 ga.72" x 144" HR Sheets	003	12	Each	$243.00	$2,916.00

"See Special Instructions Regarding Purchasing Specifications for Quality Assurance Requirements."
QA Approval [signature]
Date 1-4-05

Please Quote Purchase Order Number on all correspondence.
Please certify that the items supplied conform to applicable standards and specifications.

Subtotal:	$5,019.90
Freight:	0.00
Tax Amount:	338.84
Total Value:	$5,358.74

TEXAS SPECIALTY STEEL
12270 Hwy 181 So.
San Antonio, Texas 78223
(210) 633-0047
Fax 633-2344

SALES ORDER 5960

Omega Point Lab

DELIVER TO: Sam

Cleta

DATE ORDERED	PO #	DATE SHIPPED	SHIPPED VIA	F.O.B.	SALESMAN
1-4-05	14674 Q		OT		TS

QUANTITY		DESCRIPTION	WEIGHT	PRICE	TOTAL
30		4x5¼ Chan 20'	108# ea	44.55 ea	1336.5
10		5x6.7 Chan 20'	134# ea	55.28 ea	552.80
12		10ga 6 x 12 HR Sheets	405# ea	243.00 ea	2916.00
					4805.3
				TAX	324.36
		MTR required			5129.66
		$25.00 Service Charge For Returned Checks			
		☒ TAXABLE ☐ NON-TAXABLE			

BAYOU STEEL CORPORATION
RIVER ROAD P.O. BOX 5000
LA PLACE, LOUISIANA 70069-1156
Telephone (985) 652-4900

MATERIAL CERTIFICATION REPORT

TESTED IN ACCORDANCE WITH ASTM A6

INVOICE NO.
PRODUCT CHANNELS
HEAT NO. 28136 48 Pcs
Length 20'0"

DATE 11/30/04
Cust O-3300 -0184
GRADE A36 -01
SIZE C 4 X 5.4

PO:0663288 03 24
Prod Id:0126441

CHEMICAL ANALYSIS	
C	.11
Mn	.78
P	.014
S	.02
Si	.21
Cu	.31
Ni	.17
Cr	.17
Mo	.056
Cb	.000
V	.000
B	
Al	
Sn	
N	
Ti	

CI	
CE	

MECHANICAL PROPERTIES	TEST 1 IMPERIAL	TEST 1 METRIC	TEST 2 IMPERIAL	TEST 2 METRIC	TEST 3 IMPERIAL	TEST 3 METRIC
YIELD STRENGTH	46,363 PSI	320 MPa	45,448 PSI	313 MPa	PSI	MPa
TENSILE STRENGTH	66,399 PSI	458 MPa	66,645 PSI	460 MPa	PSI	MPa
ELONGATION	33.0 %	33.0 %	31.0 %	31.0 %	%	%
GUAGE LENGTH	8 in	203 mm	8 in	203 mm	in	mm
BEND TEST DIAMETER	d	d	d	d	d	d
BEND TEST RESULTS						
SPECIMEN AREA	sq in	sq mm	sq in	sq mm	sq in	sq mm
REDUCTION OF AREA	%	%	%	%	%	%
IMPACT STRENGTH	ft-lbs	J	ft-lbs	J	ft-lbs	J

IMPACT STRENGTH	IMPERIAL	METRIC	INTERNAL CLEANLINESS		GRAIN SIZE HARDNESS	
AVERAGE	ft-lbs	J	SEVERITY			
TEST TEMP	F	C	FREQUENCY		GRAIN PRACTICE REDUCTION RATIO	
ORIENTATION			RATING			

Customer Grade & Specs: ASME SA36 A709 GRADE 36
"NO WELD REPAIR"

I HEREBY CERTIFY THAT THE MATERIAL TEST RESULTS PRESENTED HERE ARE FROM THE REPORTED HEAT AND ARE CORRECT. ALL TESTS WERE PERFORMED IN ACCORDANCE TO THE SPECIFICATIONS REPORTED ABOVE. ALL STEEL IS ELECTRIC FURNACE MELTED, MANUFACTURED, PROCESSED, AND TESTED IN THE U.S.A WITH SATISFACTORY RESULTS, AND IS FREE OF MERCURY CONTAMINATION IN THE PROCESS.

NOTARIZED UPON REQUEST:
SWORN TO AND SUBSCRIBED BEFORE ME IN AND FOR ST. JOHN PARISH ON THIS _____ DAY OF _____ , 20____

_____
Jeanne M. Buffington, # 60493, Notary Public

SIGNED Timothy R. White
TIMOTHY R. WHITE, QUALITY ASSURANCE MANAGER

DIRECT ANY QUESTIONS OR NECESSARY CLARIFICATIONS CONCERNING THIS REPORT TO THE SALES DEPARTMENT.
1-800-535-7692 (USA)

BAYOU STEEL CORPORATION
RIVER ROAD P.O. BOX 5000
LA PLACE, LOUISIANA 70069-1156
Telephone (985) 652-4900

MATERIAL CERTIFICATION REPORT

TESTED IN ACCORDANCE WITH ASTM A6

INVOICE NO.
PRODUCT CHANNELS
HEAT NO. 23960 36 Pcs
Length 20'0"

DATE 06/01/04
Cust O-3300 -0184
GRADE A36 -01
SIZE C 5 X 6.7

PO:0661120 03 24
Prod Id:0127721

CHEMICAL ANALYSIS	
C	.12
Mn	.96
P	.018
S	.04
Si	.26
Cu	.41
Ni	.17
Cr	.19
Mo	.056
Cb	.000
V	.018
B	
Al	
Sn	
N	
Ti	

CI	
CE	

MECHANICAL PROPERTIES	TEST 1 IMPERIAL	TEST 1 METRIC	TEST 2 IMPERIAL	TEST 2 METRIC	TEST 3 IMPERIAL	TEST 3 METRIC
YIELD STRENGTH	52,522 PSI	362 MPa	53,298 PSI	367 MPa	PSI	MPa
TENSILE STRENGTH	74,321 PSI	512 MPa	75,257 PSI	519 MPa	PSI	MPa
ELONGATION	31.0 %	31.0 %	26.0 %	26.0 %	%	%
GUAGE LENGTH	8 in	203 mm	8 in	203 mm	in	mm
BEND TEST DIAMETER	d	d	d	d	d	d
BEND TEST RESULTS						
SPECIMEN AREA	sq in	sq mm	sq in	sq mm	sq in	sq mm
REDUCTION OF AREA	%	%	%	%	%	%
IMPACT STRENGTH	ft·lbs	J	ft·lbs	J	ft·lbs	J

IMPACT STRENGTH	IMPERIAL	METRIC	INTERNAL CLEANLINESS		GRAIN SIZE HARDNESS	
AVERAGE	ft·lbs	J	SEVERITY			
TEST TEMP	F	C	FREQUENCY		GRAIN PRACTICE REDUCTION RATIO	
ORIENTATION			RATING			

Customer Grade & Specs: ASME SA36 A709 GRADE 36
"NO WELD REPAIR"

I HEREBY CERTIFY THAT THE MATERIAL TEST RESULTS PRESENTED HERE ARE FROM THE REPORTED HEAT AND ARE CORRECT. ALL TESTS WERE PERFORMED IN ACCORDANCE TO THE SPECIFICATIONS REPORTED ABOVE. ALL STEEL IS ELECTRIC FURNACE MELTED, MANUFACTURED, PROCESSED, AND TESTED IN THE U.S.A WITH SATISFACTORY RESULTS, AND IS FREE OF MERCURY CONTAMINATION IN THE PROCESS.

NOTARIZED UPON REQUEST:
SWORN TO AND SUBSCRIBED BEFORE ME IN AND FOR ST. JOHN PARISH ON THIS _____ DAY OF _____ , 20____

Jeanne M. Buffington, # 60493, Notary Public

SIGNED Timothy R. White
TIMOTHY R. WHITE, QUALITY ASSURANCE MANAGER

DIRECT ANY QUESTIONS OR NECESSARY CLARIFICATIONS CONCERNING THIS REPORT TO THE SALES DEPARTMENT.

1-800-535-7692 (USA)

Tel: 205-599-8000 Fax: 205 599-8131

CERTIFICATE of ANALYSIS and TESTS

Cert. No: HO 99160
13Oct04

Part No 863826/0617501
HR COIL ASTMA1011 COMM STL
10 GA. X 72.0000"

Pcs	Wgt
26	10,530

Heat Number	Tag No
61984C	445062

Pcs	Wgt
	0

MILL=<US STEEL>/VESSL=<MP951019>/CNTRY=<USA>/REV=<04-03>

Heat Number
61984C

*** Chemical Analysis ***
C=0.0500 Mn=0.3400 P=0.0110 S=0.0080 Si=0.0050 Cu=0.0500
Al=0.0540

THIS IS TO CERTIFY THAT THE PRODUCT DESCRIBED HEREIN WAS SAMPLED AND TESTED IN ACCORDANCE WITH THE SPECIFICATION, TO OUR KNOWLEDGE, AND FULFILLS REQUIREMENTS IN SUCH RESPECT.

2042762-20

BAYOU STEEL CORPORATION
RIVER ROAD P.O. BOX 5000
LA PLACE, LOUISIANA 70069-1156
Telephone (985) 652-4900

MATERIAL CERTIFICATION REPORT

20PC- 14674Q

TESTED IN ACCORDANCE WITH ASTM A6

INVOICE NO.
PRODUCT CHANNELS
HEAT NO. 23I49 36 Pcs
Length 40'0"

DATE 03/25/04
Cust O-3300 -0184
GRADE A36 -01
SIZE C 5 X 6.7

PO:0660119 03 24
Prod Id:0128041

CHEMICAL ANALYSIS	
C	.14
Mn	.88
P	.015
S	.04
Si	.25
Cu	.24
Ni	.13
Cr	.14
Mo	.025
Cb	.000
V	.000
B	
Al	
Sn	
N	
Ti	

CI	
CE	

MECHANICAL PROPERTIES	TEST 1 IMPERIAL	TEST 1 METRIC	TEST 2 IMPERIAL	TEST 2 METRIC	TEST 3 IMPERIAL	TEST 3 METRIC
YIELD STRENGTH	48,344 PSI	333 MPa	47,994 PSI	331 MPa	PSI	MPa
TENSILE STRENGTH	70,206 PSI	484 MPa	69,642 PSI	480 MPa	PSI	MPa
ELONGATION	36.0 %	36.0 %	36.0 %	36.0 %	%	%
GUAGE LENGTH	8 in	203 mm	8 in	203 mm	in	mm
BEND TEST DIAMETER	d	d	d	d	d	d
BEND TEST RESULTS						
SPECIMEN AREA	sq in	sq mm	sq in	sq mm	sq in	sq mm
REDUCTION OF AREA	%	%	%	%	%	%
IMPACT STRENGTH	ft-lbs	J	ft-lbs	J	ft-lbs	J

IMPACT STRENGTH	IMPERIAL	METRIC	INTERNAL CLEANLINESS		GRAIN SIZE HARDNESS	
AVERAGE	ft-lbs	J	SEVERITY			
TEST TEMP	F	C	FREQUENCY		GRAIN PRACTICE	
ORIENTATION			RATING		REDUCTION RATIO	

Customer Grade & Specs: ASME SA36 A709 GRADE 36
"NO WELD REPAIR"

I HEREBY CERTIFY THAT THE MATERIAL TEST RESULTS PRESENTED HERE ARE FROM THE REPORTED HEAT AND ARE CORRECT. ALL TESTS WERE PERFORMED IN ACCORDANCE TO THE SPECIFICATIONS REPORTED ABOVE. ALL STEEL IS ELECTRIC FURNACE MELTED, MANUFACTURED, PROCESSED, AND TESTED IN THE U.S.A WITH SATISFACTORY RESULTS, AND IS FREE OF MERCURY CONTAMINATION IN THE PROCESS.

NOTARIZED UPON REQUEST:
SWORN TO AND SUBSCRIBED BEFORE ME IN AND FOR ST. JOHN PARISH ON THIS _____ DAY OF _____, 20___

Jeanne M. Bulfington, # 60493, Notary Public

SIGNED Timothy R. White
TIMOTHY R. WHITE, QUALITY ASSURANCE MANAGER

DIRECT ANY QUESTIONS OR NECESSARY CLARIFICATIONS CONCERNING THIS REPORT TO THE SALES DEPARTMENT.

1-800-535-7692 (USA)

TEXAS SPECIALTY 2106332344 01/01/2000 01:47
PAGE.01 2106332344 JAN 10 '05 13:05

Q/A RECEIVING REPORT

CLIENT/PROJECT NAME Sandia Nat'l Labs
CLIENT/PROJECT NUMBER 14790-123263.64+65
RECEIVED FROM Sandia Nat'l Labs
PROJECT LOCATION Omega Point Labs

REPORT NUMBER 2700 - 14790
DATE RECEIVED 3-4-05
DATE INSPECTED 3-4-05
INSPECTED BY: [signature]

ITEM DESCRIPTION	P.O . NO.	QUANTITY Order	QUANTITY Rec'd	QUANTITY B.O.	I.D. NO.	CON'tD MATL Y/N	CERT REC'D Y/N	SAFETY RELATED Y/N	CONTAINER INTEGRITY	ACCEPTANCE Accept	ACCEPTANCE Hold	ACCEPTANCE Reject	REMARKS
cabletrays 12"	NA	Q	3	Q	24BP09-12-144STR	Y	N	N	Good	X			Receiving Only
cabletrays 36"	NA	Q	3	Q	24BP09-36-144-STR	Y	N	N	Good	X			
90° - 12"	NA	Q	2	Q	4P-1290V12A VRT I/S	Y	N	N	Good	X			
90° - 36"	NA	Q	2	Q	4P-36-90V12A VRT I/S	Y	N	N	Good	X			
Splice Plates	NA	Q	8 3-4-05	Q	11954A	Y	N	N	Good	X			
Splice Plates	NA	Q	12	Q	113A1D	Y	N	N	Good	X			
									-				

FM 136

PACKING LIST

SHIPPING ORDER NO.
80770500001

Page 440

COOPER B-Line 509 West Monroe Street
Highland, Illinois 62249-0326, U.S.A.
618-654-2184

024012438

000072721

PAGE 1

SOLD TO:
BORDER STATES ELECTRIC
PO BOX 2767

FARGO ND 581082767

SHIP TO:
OMEGA POINT LABS
16015 SHADY FALLS ROAD

ELMENDORF TX 78112

ATTN: RECEIVING

SHIP FROM	SHIP DATE	SHIP VIA	BILL OF LADING	WEIGHT	FREIGHT TERMS
RENO	3/02/05	PRECISION AIR C	01256739	501.00	CHARGE

CST PO: 5500414947

PHONE: 7012935833

ORDERED	DUE	SHIPPED	BACKORDER	UNIT	LINE	DESCRIPTION
						CONTACT IS DEG PRIEST 210 635 8100 CAN SHIP EARLY 3/2 PER KATHY C. SHIP PRECISION AIR PER STEVE AT KH 1-800-842-7472 ACCT #613. INSURE FOR VALUE OF MATL $1516.00. ASK PRECISION TO CONFIRM WITH HOPE AT BORDER 505-344-1313.
3	3	3		PC	1	248P09-12-144 ST SC ✓ 78101162149
3	3	3		PC	2	248P09-36-144 ST SC ✓ 78101162454
2	2	2		PC	3	4P-12-90VI24 VRT I/S ✓ 78101162189
2	2	2		PC	4	4P-36-90VI24 VRT I/S ✓ 78101162491
10	10	10		PR	5	9ZN-8004 SPLICE PLT ✓ 78101126314

ANY SHORTAGE OR DAMAGE MUST BE REPORTED TO CUSTOMER SERVICE AT 618.654.2184 WITHIN TEN (10) DAYS FROM DATE OF SHIPMENT.

THIS MEMORANDUM

is an acknowledgment that a Bill of Lading has been issued and is not the Original Bill of Lading nor a copy or duplicate, covering the property named herein, and is intended solely for filing or record.

RECEIVED, subject to the classifications and tariffs in effect on the date of the receipt by the carrier of the property described in the Original Bill of Lading, the property described below, in apparent good order, except as noted (contents and condition of contents of packages unknown), marked consigned, and destined as indicated below, which said carrier (the word carrier being understood throughout this contract as meaning any person or corporation in possession of the property under the contract) agrees to carry to its usual place of delivery at said destination, if on its route, otherwise to deliver to another carrier on the route to said destination. It is mutually agreed, as to each carrier of all or any of said property over all or any portion of said route to destination, and as to each party at any time interested in all or any of said property, that every service to be performed hereunder shall be subject to all the terms and conditions of the Uniform Domestic Straight Bill of Lading set forth (1) in Official, Southern, Western and Illinois Freight Classifications in effect on the date hereof, if this is a rail or a rail-water shipment or (2) in the applicable motor carrier classification or tariff if this is a motor carrier shipment.

Shipper hereby certifies that he is familiar with all the terms and conditions of the said bill of lading, including those on the back thereof, set forth in the classification or tariff which governs the transportation of this shipment, and the said terms and conditions are hereby agreed to by the shipper and accepted for himself and his assigns.

4

B/L NO. 0126-6739

SHIPPER'S NO. 907705 00 001

Page 441

AT RENO FROM **COOPER B-Line** 3/02/05 NAME OF CARRIER

Consigned To OMEGA POINT LABS
16015 SHADY FALLS ROAD

(Mail or street address of consignee – For purposes of notification only.)

PO# 5500414947
MARK: RECEIVING

Dest'n ELMENDORF TX 78112

Route

Del'ng Carr. PRECISION AIR C

Car or Vehicle Initials No.

NUMBER OF PACKAGES	KIND OF PACKAGE, DESCRIPTION OF ARTICLES, SPECIAL MARKS, AND EXCEPTIONS		*WEIGHT (SUBJECT TO CORRECTION)	CLASS OR RATE
	Bundles of _____Pcs. Single Pcs. Carton _____Pcs.	Channels, NOI Iron or Steel Item No. 104850		
1	Crates Skids Cartons	Braces, Brackets NOI, Iron or Steel 3/16" Thick or Thicker Item No. 104600	25#	50
	Bundle of _____Pcs. Single Pcs. {Bundles of _____Pcs. Curved Fitting Single Pcs. Curved Fitting}	Cable Racks; Trays Troughs or Cable Way Aluminum Straight Section and Curved Fittings. Item No. 61220 - Sub 2		
3 4	Bundles of _____Pcs. Single Pcs. {Bundles of _____Pcs. Curved Fittings Single Pcs. Curved Fitting}	Cable Racks, Trays Troughs or Cable Way Steel 16 Gauge or Thicker Straight Sections and Curved Fittings Item No. 61220 - Sub 1	476#	60
	Crates Skids Cartons	Clips, Fasteners or Mounts, Steel, 94230		
	7 TOTAL PCS.- 601#			

DELIVERY DATE 03/04
CONTACT IS DEC PRIEST 310-635-0100
$1516.00 INSURANCE
****
SEND FREIGHT BILL WITH B/L TO:
BILL ACCT# 613
X
X
X XX 00001
****

Subject to Section 7 of conditions of applicable bill of lading, if this shipment is to be delivered to the consignee without recourse on the consignor, the consignor shall sign the following statement:

The carrier shall not make delivery of this shipment without payment of freight and all other lawful charges.

COOPER B-Line

(Signature of Consignor)

If charges are to be prepaid, write or stamp here, "To be Prepaid."

THIRD PARTY

Received $ to

apply in prepayment of the charges on the property described hereon.

Agent or Cashier.

Per

(The signature here acknowledges only the amount prepaid.)

Charges Advanced:
$

Collect On Delivery $ and Remit to

Street City State

C.O.D. CHARGES TO BE PAID BY
Shipper ☐ Consignee ☐

* If the shipment moves between two ports by a carrier by water, the law requires that the bill of lading shall state whether it is "carrier's or shipper's weight."
NOTE–Where the rate is dependent on value, shippers are required to state specifically in writing the agreed or declared value of the property. The agreed or declared value of the property is hereby specifically stated by the shipper to be not exceeding

per Shattuck, Tom

The Fibre Boxes used for this shipment conform to the specifications set forth in the box maker's certificate thereon, and all other requirements of Consolidated Freight Classification.

COOPER B-Line Shipper, Per

Agent, Per

Permanent postoffice address of shipper, **P.O. Box 326, Highland, Illinois 62249**

Form 103 Rev. 05/01

PACKING LIST COPY

Airgroup - DFW
PO Box 3627
Bellevue, WA 98009-3627
Tel: 817-481-0970 Fax: 817-488-6583
www.airgroup.com

HAWB # : 129000584
Origin : DFW
Destination :
Pick Up Date : 03/03/2005
Deliv Date : BY 03/04/2005
COD :
Charges : Third Party
Shipment # :

Domestic HAWB

Shipper	Consignee	Billing Party
AA C/O QLS 3801 PINNACLE POINT COCKRELL, TX 75211 **Attn:** **Tel:** **Ref #**	AA C/O LSG SKY CHEFS 18950 COLONEL FISCHER DR. HOUSTON, TX 77032 **Attn:** CECELIA **Tel:** 281-443-8560 **Ref #**	WORLDWIDE FLIGHT E BUSINESS 1925 W JOHN CARPENTER FRWY STE 450 IRVING, TX 75063 **Attn:** **Tel:** **Ref #**

Pick Up Ready	Between	Closing	Deliver By	Between	Closing
03/03/2005	-		03/04/2005	-	

TSA	U

Special Instructions

Pieces	Actual Weight	Corrected Weight	Description	Length	Width	Height
1	266.00 LB			48.00	40.00	19.00

SHIPMENT TOTALS

1	266.00 LB			188.04 LB

Charge	Description	Qty	Rate	Amount

TOTAL CHARGES $0.00

Total Declared Value

Shipper Signature			Pick-Up Driver Signature			Consignee Signature		
Date	Time	Pcs	Date	Time	Pcs	Date	Time	Pcs
Exceptions (Shipment received in good order unless noted)			Exceptions (Shipment received in good order unless noted)			Exceptions (Shipment received in good order unless noted)		

Q/A RECEIVING REPORT

CLIENT/PROJECT NAME Sandia National Labs
CLIENT/PROJECT NUMBER 14790-123263-264+265
RECEIVED FROM Sandia Nat'l Labs
PROJECT LOCATION Omega Point Labs

REPORT NUMBER 2691 - 14790
DATE RECEIVED 1-14-05
DATE INSPECTED 1-14-05
INSPECTED BY: [illegible]

ITEM DESCRIPTION	P.O . NO.	QUANTITY Order	Rec'd	B.O.	I.D. NO.	CON'tD MATL Y/N	CERT REC'D Y/N	SAFETY RELATED Y/N	CONTAINER INTEGRITY	ACCEPTANCE Accept	Hold	Reject	REMARKS
12" wide cable tray	NA	0	4	0	09-1D79-0012-12	Y		N	Good	X			Receiving Only
12" inside curve cable tray	NA	0	3	0	09-1D79-9124-12								
36" inside curve cable tray	NA	0	3	0	09-1D79-9124-36								
Unistrut super strut	NA	0	13	0	A-1200-AS								
2" square steel tube	NA	0	2	0									
Box of hardware-cable tray	NA	0	1	0	NA								
36" cable tray	NA	0	4	0	09-1D79-0012-36								
Bare #8 Copper	NA	0	36	0	#3500 NAED 050-4000								

09-016-11/02

Q/A RECEIVING REPORT

OMEGA POINT LABORATORIES

CLIENT/PROJECT NAME Sandia National Labs
CLIENT/PROJECT NUMBER 14790 - 123263-264 & 265
RECEIVED FROM Sandia Nat'l Labs
PROJECT LOCATION Omega Point Labs

REPORT NUMBER 2691 - 14790
DATE RECEIVED 1-14-05
DATE INSPECTED 1-14-05
INSPECTED BY: [signature]

ITEM DESCRIPTION	P.O. NO.	QUANTITY Order	QUANTITY Rec'd	QUANTITY B.O.	I.D. NO.	CON'tD MATL Y/N	CERT REC'D Y/N	SAFETY RELATED Y/N	CONTAINER INTEGRITY	ACCEPTANCE Accept	ACCEPTANCE Hold	ACCEPTANCE Reject	REMARKS
1" galv. conduit	NA	Ø	12	Ø	3WA8 1" 1"X10P6RC	Y		N	GOOD	X			Receiving only
1" conduit bodies	NA	Ø	5	Ø	APA LB77 1" FM7								
1" conduit gaskets	NA	Ø	5	Ø	NA								
1" steel covers	NA	Ø	5	Ø	APP 1" FM7 370								
2.5" galv. conduit	NA	Ø	12	Ø	3WA0 2½" E-104582S	Y							
2.5" conduit bodies	NA	Ø	5	Ø	2-½" FM7 APP LB77								
2.5" conduit gaskets	NA	Ø	5	Ø	NA								
2.5" steel covers	NA	Ø	5	Ø	Form 7 o/z Gedney 870 2½"-3"								
4" galv. conduit	NA	Ø	12	Ø	3WA0 4" E-104582S								
4" conduit bodies	NA	Ø	5	Ø	4" APP LB 107								
4" conduit gaskets	NA	Ø	5	Ø	NA								
4" steel covers	NA	Ø	5	Ø	APP 970 3½"-4" FM7								
18"X24"X8" junction boxes	NA	Ø	4	Ø	~~00035185981~~ 1-14-05 ASE24X18X8NK								
90°-1" conduit elbow	NA	Ø	5	Ø	E-32152-H 1-90-STD RAD								
90°-2.5" conduit elbow	NA	Ø	5	Ø	2X½X90 Deg								
90°-4" conduit elbow	NA	Ø	5	Ø	E-32152-H 3WA8 4" 90 DEG	Y		N	GOOD	X			

09-016-11/02

RR#2691

Cleda

Rec. 1-12-05

FYI shipment is due

Sandia National Laboratories
For the U.S. Department of Energy
1515 Eubank SE
Albuquerque, NM, 87123

SHIPPER 44885

Commercial Invoice

Status: Approved

Ship to:

Omega Point Laboratories
16015 Shady Falls Road

Elmendorf TX 78112
United States

RMA# or RGA#	
Deliver to:	Deg Priest
Phone:	(210) 635-8100
Building:	Room:
Mail Stop:	
Company:	Omega Point Laboratories
Department:	
Address Type:	Unclassified
Date Due at Destination:	1/16/2005
Production Related:	No

Origination Site:	SA
Form filled out by:	WYANT,FRANCIS J.
Phone:	5058445682
Date Prepared:	2005-1-10 FRANK
Requester:	WYANT,FRANCIS J.
Phone:	5058445682
Org. #:	06861

For Shipment Processing Use

Date Shipped:	
Carrier:	None Selected
Mode:	None Selected
Bill of Lading No.:	
Total # of Pkgs:	0
Total Weight:	0.0 lbs
Total Cubic Dim:	0.0
Advance Notification	**Contacted** Yes No
Name and Phone:	
741 Number:	
ATS:	
TID Numbers:	
RCT Initial/Dates	

Reason/Authority: To be Consumed in Testing / Incorporate into End Product
Return Date: NONE
Authority Number:
Freight Charge Payment: Sandia Pays
Project: 73766
Task: 01.08
Carrier: NONE
Account:

If shipping controlled property to a new Sandia location
Destination Bldg: **Room:**

If shipping to international destination:
Import duties and taxes will be paid by my project/task: I
Export Authorization:

No freight charge reason: NONE
Is material being shipped from the Shipping Department building or the 6000 Igloo? No
Shipment Comments: Shipping container located at the TEAMS (old TOSI Site). Contact Chuck Girard (cell: 459-8181) for pick
Transportation Pickup Requested: Yes
Questions about pickup call Dispatcher 844-1448 non-hazardous materials, 844-2556 hazardous materials.

Landstar Inway
805-8828
or
646-0412

Shipper's Export Declaration prepared:

Total Shipment Quantity and Value:	1	$6,000.00

LINE ITEM LIST FOR SHIPPER NUMBER 44885

Line Item #	Description/Comments For temporary transfer of items to international destinations, include item Manufacturer's Name, Category Domestic or Foreign, and Serial Number.	Classification Category/ level	Qty	Unit	Unit Value	T
1	Description: One shipping container containing the following items: 120 ft 1-in galvanized conduit, 5 1-in conduit bodies, 5 1-in conduit gaskets, 5 1-in steel covers; 120 ft 2.5-in galvanized conduit, 5 2.5-in conduit bodies, 5 2.5-in conduit gaskets, 5 2.5-in steel covers; 120 ft 4-in galvanized conduit, 5 4-in conduit bodies, 5 4-in conduit gaskets, 5 4-in steel covers; 4 18 x 24 x 8 junction boxes; 5 90-degree 1-in conduit elbows; 5 90-degree 2.5-in conduit elbows; 5 90-degree 4-in conduit elbows; 48-ft of 12-in wide cable trays; 48-ft of 36-in wide cable trays; 3 12-in inside curves; 3 36-in inside curves; 130 ft of Unistrut; 20 ft of 2-in square steel tube; Box of hardware for cable trays Comments: These items will be used in a series of destructive tests and will not be returned to Sandia following use.	Unclassified	1	EACH	$6,000.00	$(

PACKAGES

				Dimensions					
Quantity	Type	Contents	Weight		L	W	H	D	Cubic Fe
No Packages Found									

Combination to Lock on Shipping Container:

Turn right 3 times. Stop at 6
Turn left past 6 Stop at 8
Turn right to 26

Sandia National Laboratories
For the U.S. Department of Energy
1515 Eubank SE
Albuquerque, NM, 87123

SHIPPER **45687**

Commercial Invoice

Status: Waiting for Approval

Ship to:

Omega Point Laboratories, Inc
16015 Shady Falls Road

Elmendorf TX 78112-9784
United States

RMA# or RGA#

Deliver to:	Deggary N. Priest
Phone:	210-635-8100
Building:	Room:
Mail Stop:	
Company:	Omega Point Laboratories
Department:	
Address Type:	Unclassified
Date Due at Destination:	2/27/2005
Production Related:	No

Origination Site:	SA
Form filled out by:	WALLACE,SAMUEL T.
Phone:	5058440225
Date Prepared:	2005-1-27
Requester:	WALLACE,SAMUEL T.
Phone:	5058440225
Org. #:	06113

For Shipment Processing Use

Date Shipped:	
Carrier:	None Selected
Mode:	None Selected
Bill of Lading No.:	
Total # of Pkgs:	0
Total Weight:	0.0 lbs
Total Cubic Dim:	0.0
Advance Notification	**Contacted** Yes No
Name and Phone:	
741 Number:	
ATS:	
TID Numbers:	
RCT Initial/Dates	

Reason/Authority: Analysis / Evaluation / Testing
Return Date: NONE
Authority Number:
Freight Charge Payment: Sandia Pays
Project: 73766
Task: 01.03
Carrier: NONE
Account:

If shipping controlled property to a new Sandia location
Destination Bldg: **Room:**

If shipping to international destination:
Import duties and taxes will be paid by my project/task:
Export Authorization:

No freight charge reason: NONE
Is material being shipped from the Shipping Department building or the 6000 Igloo? Yes
Shipment Comments: my repack items, if needed
Transportation Pickup Requested: Yes
Questions about pickup call Dispatcher 844-1448 non-hazardous materials, 844-2556 hazardous materials.

Shipper's Export Declaration prepared:

Total Shipment Quantity and Value:	46	$9,200.00

LINE ITEM LIST FOR SHIPPER NUMBER 45687

Line Item #	Description/Comments For temporary transfer of items to international destinations, include item Manufacturer's Name, Category Domestic or Foreign, and Serial Number.	Classification Category/level	Qty	Unit	Unit Value	Total $
1	Description: Thermocouples Comments:	Unclassified	46	EACH	$200.00	$9,200.00

PACKAGES

				Dimensions					
Quantity	Type	Contents	Weight		L	W	H	D	Cubic Feet
No Packages Found									

Sandia National Laboratories

Operated for the U.S. Department of Energy by
Sandia Corporation

Albuquerque, New Mexico 87185-0706

Tel (505) 844-2464, FAX (505) 844-0240
Internet: bllevin@sandia.gov

January 27, 2005

Deggary N. Priest, President
Omega Point Laboratories, Inc.
16015 Shady Falls Road
Elmendorf, TX 78112-9784
(210) 635-8100

Re: Quick Disconnect Thermocouples

Dear Deg,

Please find the forty-six thermocouples enclosed for installation and insulation thermal testing of the junction boxes. The Primary Standards Laboratory at SNL verified calibration of each of the thermocouples and have provided a certificate of uncertainty over a range of 70°F to 1000°F for each thermocouple. Please find enclosed copies of these certificates along with calibration stickers. Each sticker can be attached to its associated thermocouple near the connector end following the test to minimize interference during assembly and testing.

Yours truly,

Bruce

Bruce L. Levin

BLL/bll
Copy: file

PRIMARY STANDARDS LABORATORY

Sandia National Laboratories, Albuquerque, New Mexico 87185-0665

CERTIFICATE

File No. 51536
LIMITED

THERMOCOUPLE	TYPE K - STD
Model No.	KQIN-116-144
Serial No.	1
Procedure No.	CP – TC (07/22/98)
Lab Conditions:	Temperature: 23 °C ± 2 °C Humidity: 40% ± 10%
Submitted by:	Organization 06113 SNL / NM
Certified:	January 18, 2005
Expires:	January 18, 2006

COPY

The thermocouple was calibrated over the temperature range of 71 °F to 1000 °F by comparison with a Standard Platinum Resistance Thermometer (SPRT). The thermocouple was calibrated in the 9122 Dry Well, with an immersion of 6 inches. The probe mV output was measured with an 8508A Fluke Multimeter. Both the SPRT and the Multimeter have calibrations that are traceable to the National Institute of Standards and Technology (NIST) or to intrinsic standards. The thermocouple type, temperature range calibrated over and the uncertainty of a confidence level of k=2 is as follows:

TC Type	Range	Uncertainty
K	70 °F to 1000 °F	± (4 °F or 0.75% of reading) (whichever is greater)

NOTES: The tolerance statement applies only to the thermocouple, and does not include any instrument used by the owner to measure it.
The results relate only to the items tested or calibrated.

Metrologist: A. Sanchez, 02541

Approved by: L.J. Azevedo, 02541
Manager

Copy to: Submitting organization
Department 02541 file

Date received: 01/14/05
Dates tested: 01/18/05

NVLAP®
Accredited by the National Voluntary Laboratory Accreditation Program for the scope of accreditation under Lab Code 105002

PRIMARY STANDARDS LABORATORY

Sandia National Laboratories, Albuquerque, New Mexico 87185-0665

CERTIFICATE

File No. 51537
LIMITED

THERMOCOUPLE	TYPE K - STD
Model No.	KQIN-116-144
Serial No.	2
Procedure No.	CP – TC (07/22/98)
Lab Conditions:	Temperature: 23 °C ± 2 °C Humidity: 40% ± 10%
Submitted by:	Organization 06113 SNL / NM
Certified:	January 18, 2005
Expires:	January 18, 2006

COPY

The thermocouple was calibrated over the temperature range of 71 °F to 1000 °F by comparison with a Standard Platinum Resistance Thermometer (SPRT). The thermocouple was calibrated in the 9122 Dry Well, with an immersion of 6 inches. The probe mV output was measured with an 8508A Fluke Multimeter. Both the SPRT and the Multimeter have calibrations that are traceable to the National Institute of Standards and Technology (NIST) or to intrinsic standards. The thermocouple type, temperature range calibrated over and the uncertainty of a confidence level of k=2 is as follows:

TC Type	Range	Uncertainty
K	70 °F to 1000 °F	± (4 °F or 0.75% of reading) (whichever is greater)

NOTES: The tolerance statement applies only to the thermocouple, and does not include any instrument used by the owner to measure it.
The results relate only to the items tested or calibrated.

Metrologist: A. Sanchez, 02541

Approved by: L.J. Azevedo, 02541
Manager

Copy to: Submitting organization
Department 02541 file

Date received: 01/14/05
Dates tested: 01/18/05

NVLAP®
Accredited by the National Voluntary Laboratory Accreditation Program for the scope of accreditation under Lab Code 105002

PRIMARY STANDARDS LABORATORY

Sandia National Laboratories, Albuquerque, New Mexico 87185-0665

CERTIFICATE

File No. 51538
LIMITED

THERMOCOUPLE	TYPE K - STD
Model No.	KQIN-116-144
Serial No.	3
Procedure No.	CP – TC (07/22/98)
Lab Conditions:	Temperature: 23 °C ± 2 °C Humidity: 40% ± 10%
Submitted by:	Organization 06113 SNL / NM
Certified:	January 18, 2005
Expires:	January 18, 2006

COPY

The thermocouple was calibrated over the temperature range of 71 °F to 1000 °F by comparison with a Standard Platinum Resistance Thermometer (SPRT). The thermocouple was calibrated in the 9122 Dry Well, with an immersion of 6 inches. The probe mV output was measured with an 8508A Fluke Multimeter. Both the SPRT and the Multimeter have calibrations that are traceable to the National Institute of Standards and Technology (NIST) or to intrinsic standards. The thermocouple type, temperature range calibrated over and the uncertainty of a confidence level of k=2 is as follows:

TC Type	Range	Uncertainty
K	70 °F to 1000 °F	± (4 °F or 0.75% of reading) (whichever is greater)

NOTES: The tolerance statement applies only to the thermocouple, and does not include any instrument used by the owner to measure it.
The results relate only to the items tested or calibrated.

Metrologist: A. Sanchez, 02541

Approved by: L.J. Azevedo, 02541
Manager

Copy to: Submitting organization
Department 02541 file

Date received: 01/14/05
Dates tested: 01/18/05

NVLAP®
Accredited by the National Voluntary Laboratory Accreditation Program for the scope of accreditation under Lab Code 105002

PRIMARY STANDARDS LABORATORY

Sandia National Laboratories, Albuquerque, New Mexico 87185-0665

CERTIFICATE

File No. 51539
LIMITED

THERMOCOUPLE	TYPE K - STD
Model No.	KQIN-116-144
Serial No.	4
Procedure No.	CP – TC (07/22/98)
Lab Conditions:	Temperature: 23 °C ± 2 °C Humidity: 40% ± 10%
Submitted by:	Organization 06113 SNL / NM
Certified:	January 18, 2005
Expires:	January 18, 2006

COPY

The thermocouple was calibrated over the temperature range of 71 °F to 1000 °F by comparison with a Standard Platinum Resistance Thermometer (SPRT). The thermocouple was calibrated in the 9122 Dry Well, with an immersion of 6 inches. The probe mV output was measured with an 8508A Fluke Multimeter. Both the SPRT and the Multimeter have calibrations that are traceable to the National Institute of Standards and Technology (NIST) or to intrinsic standards. The thermocouple type, temperature range calibrated over and the uncertainty of a confidence level of k=2 is as follows:

TC Type	Range	Uncertainty
K	70 °F to 1000 °F	± (4 °F or 0.75% of reading) (whichever is greater)

NOTES: The tolerance statement applies only to the thermocouple, and does not include any instrument used by the owner to measure it.
The results relate only to the items tested or calibrated.

Metrologist: A. Sanchez, 02541

Approved by: L.J. Azevedo, 02541
Manager

Copy to: Submitting organization
Department 02541 file

Date received: 01/14/05
Dates tested: 01/18/05

NVLAP®
Accredited by the National Voluntary Laboratory Accreditation Program for the scope of accreditation under Lab Code 105002

PRIMARY STANDARDS LABORATORY

Sandia National Laboratories, Albuquerque, New Mexico 87185-0665

CERTIFICATE

File No. 51540
LIMITED

THERMOCOUPLE	TYPE K - STD
Model No.	KQIN-116-144
Serial No.	5
Procedure No.	CP – TC (07/22/98)
Lab Conditions:	Temperature: 23 °C ± 2 °C Humidity: 40% ± 10%
Submitted by:	Organization 06113 SNL / NM
Certified:	January 18, 2005
Expires:	January 18, 2006

COPY

The thermocouple was calibrated over the temperature range of 71 °F to 1000 °F by comparison with a Standard Platinum Resistance Thermometer (SPRT). The thermocouple was calibrated in the 9122 Dry Well, with an immersion of 6 inches. The probe mV output was measured with an 8508A Fluke Multimeter. Both the SPRT and the Multimeter have calibrations that are traceable to the National Institute of Standards and Technology (NIST) or to intrinsic standards. The thermocouple type, temperature range calibrated over and the uncertainty of a confidence level of k=2 is as follows:

TC Type	Range	Uncertainty
K	70 °F to 1000 °F	± (4 °F or 0.75% of reading) (whichever is greater)

NOTES: The tolerance statement applies only to the thermocouple, and does not include any instrument used by the owner to measure it.
The results relate only to the items tested or calibrated.

Metrologist: A. Sanchez, 02541

Approved by: L.J. Azevedo, 02541
Manager

Copy to: Submitting organization
Department 02541 file

Date received: 01/14/05
Dates tested: 01/18/05

NVLAP®
Accredited by the National Voluntary Laboratory Accreditation Program for the scope of accreditation under Lab Code 105002

PRIMARY STANDARDS LABORATORY

Sandia National Laboratories, Albuquerque, New Mexico 87185-0665

CERTIFICATE

File No. 51541
LIMITED

THERMOCOUPLE	TYPE K - STD
Model No.	KQIN-116-144
Serial No.	6
Procedure No.	CP – TC (07/22/98)
Lab Conditions:	Temperature: 23 °C ± 2 °C Humidity: 40% ± 10%
Submitted by:	Organization 06113 SNL / NM
Certified:	January 18, 2005
Expires:	January 18, 2006

COPY

The thermocouple was calibrated over the temperature range of 71 °F to 1000 °F by comparison with a Standard Platinum Resistance Thermometer (SPRT). The thermocouple was calibrated in the 9122 Dry Well, with an immersion of 6 inches. The probe mV output was measured with an 8508A Fluke Multimeter. Both the SPRT and the Multimeter have calibrations that are traceable to the National Institute of Standards and Technology (NIST) or to intrinsic standards. The thermocouple type, temperature range calibrated over and the uncertainty of a confidence level of k=2 is as follows:

TC Type	Range	Uncertainty
K	70 °F to 1000 °F	± (4 °F or 0.75% of reading) (whichever is greater)

NOTES: The tolerance statement applies only to the thermocouple, and does not include any instrument used by the owner to measure it.
The results relate only to the items tested or calibrated.

Metrologist: A. Sanchez, 02541

Approved by: L.J. Azevedo, 02541
Manager

Copy to: Submitting organization
Department 02541 file

Date received: 01/14/05
Dates tested: 01/18/05

NVLAP®
Accredited by the National Voluntary Laboratory Accreditation Program for the scope of accreditation under Lab Code 105002

PRIMARY STANDARDS LABORATORY

Sandia National Laboratories, Albuquerque, New Mexico 87185-0665

CERTIFICATE

File No. 51542
LIMITED

THERMOCOUPLE	TYPE K - STD
Model No.	KQIN-116-144
Serial No.	7
Procedure No.	CP – TC (07/22/98)
Lab Conditions:	Temperature: 23 °C ± 2 °C Humidity: 40% ± 10%
Submitted by:	Organization 06113 SNL / NM
Certified:	January 18, 2005
Expires:	January 18, 2006

COPY

The thermocouple was calibrated over the temperature range of 71 °F to 1000 °F by comparison with a Standard Platinum Resistance Thermometer (SPRT). The thermocouple was calibrated in the 9122 Dry Well, with an immersion of 6 inches. The probe mV output was measured with an 8508A Fluke Multimeter. Both the SPRT and the Multimeter have calibrations that are traceable to the National Institute of Standards and Technology (NIST) or to intrinsic standards. The thermocouple type, temperature range calibrated over and the uncertainty of a confidence level of k=2 is as follows:

TC Type	Range	Uncertainty
K	70 °F to 1000 °F	± (4 °F or 0.75% of reading) (whichever is greater)

NOTES: The tolerance statement applies only to the thermocouple, and does not include any instrument used by the owner to measure it.
The results relate only to the items tested or calibrated.

Metrologist: A. Sanchez, 02541

Approved by: L.J. Azevedo, 02541
Manager

Copy to: Submitting organization
Department 02541 file

Date received: 01/14/05
Dates tested: 01/18/05

NVLAP®
Accredited by the National Voluntary Laboratory Accreditation Program for the scope of accreditation under Lab Code 105002

PRIMARY STANDARDS LABORATORY

Sandia National Laboratories, Albuquerque, New Mexico 87185-0665

CERTIFICATE

File No. 51543
LIMITED

THERMOCOUPLE	TYPE K - STD
Model No.	KQIN-116-144
Serial No.	8
Procedure No.	CP – TC (07/22/98)
Lab Conditions:	Temperature: 23 °C ± 2 °C Humidity: 40% ± 10%
Submitted by:	Organization 06113 SNL / NM
Certified:	January 18, 2005
Expires:	January 18, 2006

COPY

The thermocouple was calibrated over the temperature range of 71 °F to 1000 °F by comparison with a Standard Platinum Resistance Thermometer (SPRT). The thermocouple was calibrated in the 9122 Dry Well, with an immersion of 6 inches. The probe mV output was measured with an 8508A Fluke Multimeter. Both the SPRT and the Multimeter have calibrations that are traceable to the National Institute of Standards and Technology (NIST) or to intrinsic standards. The thermocouple type, temperature range calibrated over and the uncertainty of a confidence level of k=2 is as follows:

TC Type	Range	Uncertainty
K	70 °F to 1000 °F	± (4 °F or 0.75% of reading) (whichever is greater)

NOTES: The tolerance statement applies only to the thermocouple, and does not include any instrument used by the owner to measure it.
The results relate only to the items tested or calibrated.

Metrologist: A. Sanchez, 02541

Approved by: L.J. Azevedo, 02541
Manager

Copy to: Submitting organization
Department 02541 file

Date received: 01/14/05
Dates tested: 01/18/05

NVLAP®
Accredited by the National Voluntary Laboratory Accreditation Program for the scope of accreditation under Lab Code 105002

Q/A RECEIVING REPORT

CLIENT/PROJECT NAME Sandia Natl Labs/OPL
CLIENT/PROJECT NUMBER 14790-123263, 64465
RECEIVED FROM Sandia Natl Labs
PROJECT LOCATION Omega Point Labs

REPORT NUMBER 2695 - 14790/OPL
DATE RECEIVED ~~2-1~~ 2-1-05
DATE INSPECTED 2-1-05
INSPECTED BY:

ITEM DESCRIPTION	P.O . NO.	QUANTITY			I.D. NO.	CON'tD MATL Y/N	CERT REC'D Y/N	SAFETY RELATED Y/N	CONTAINER INTEGRITY	ACCEPTANCE			REMARKS
		Order	Rec'd	B.O.						Accept	Hold	Reject	
					.								
quick Disconnect Thermocouples	NA	46	46	0	KQIN-116-144-Ungrounded SN: 1 through 46	Y	Y	N	Good	X			TC's sent to Sandia for calibration using Transmittal #1126 dated 1/11/05

09-016-11/02

PRIMARY STANDARDS LABORATORY

Sandia National Laboratories, Albuquerque, New Mexico 87185-0665

CERTIFICATE

File No. 51544
LIMITED

THERMOCOUPLE	TYPE K - STD
Model No.	KQIN-116-144
Serial No.	9
Procedure No.	CP – TC (07/22/98)
Lab Conditions:	Temperature: 23 °C ± 2 °C Humidity: 40% ± 10%
Submitted by:	Organization 06113 SNL / NM
Certified:	January 18, 2005
Expires:	January 18, 2006

COPY

The thermocouple was calibrated over the temperature range of 71 °F to 1000 °F by comparison with a Standard Platinum Resistance Thermometer (SPRT). The thermocouple was calibrated in the 9122 Dry Well, with an immersion of 6 inches. The probe mV output was measured with an 8508A Fluke Multimeter. Both the SPRT and the Multimeter have calibrations that are traceable to the National Institute of Standards and Technology (NIST) or to intrinsic standards. The thermocouple type, temperature range calibrated over and the uncertainty of a confidence level of k=2 is as follows:

TC Type	Range	Uncertainty
K	70 °F to 1000 °F	± (4 °F or 0.75% of reading) (whichever is greater)

NOTES: The tolerance statement applies only to the thermocouple, and does not include any instrument used by the owner to measure it.
The results relate only to the items tested or calibrated.

Metrologist: A. Sanchez, 02541

Approved by: L.J. Azevedo, 02541
Manager

Copy to: Submitting organization
Department 02541 file

Date received: 01/14/05
Dates tested: 01/18/05

NVLAP®
Accredited by the National Voluntary Laboratory Accreditation Program for the scope of accreditation under Lab Code 105002

PRIMARY STANDARDS LABORATORY

Sandia National Laboratories, Albuquerque, New Mexico 87185-0665

CERTIFICATE

File No. 51545
LIMITED

THERMOCOUPLE	TYPE K - STD
Model No.	KQIN-116-144
Serial No.	10
Procedure No.	CP – TC (07/22/98)
Lab Conditions:	Temperature: 23 °C ± 2 °C Humidity: 40% ± 10%
Submitted by:	Organization 06113 SNL / NM
Certified:	January 18, 2005
Expires:	January 18, 2006

COPY

The thermocouple was calibrated over the temperature range of 71 °F to 1000 °F by comparison with a Standard Platinum Resistance Thermometer (SPRT). The thermocouple was calibrated in the 9122 Dry Well, with an immersion of 6 inches. The probe mV output was measured with an 8508A Fluke Multimeter. Both the SPRT and the Multimeter have calibrations that are traceable to the National Institute of Standards and Technology (NIST) or to intrinsic standards. The thermocouple type, temperature range calibrated over and the uncertainty of a confidence level of k=2 is as follows:

TC Type	Range	Uncertainty
K	70 °F to 1000 °F	± (4 °F or 0.75% of reading) (whichever is greater)

NOTES: The tolerance statement applies only to the thermocouple, and does not include any instrument used by the owner to measure it.
The results relate only to the items tested or calibrated.

Metrologist: A. Sanchez, 02541

Approved by: L.J. Azevedo, 02541
Manager

Copy to: Submitting organization
Department 02541 file

Date received: 01/14/05
Dates tested: 01/18/05

NVLAP®
Accredited by the National Voluntary Laboratory Accreditation Program for the scope of accreditation under Lab Code 105002

PRIMARY STANDARDS LABORATORY

Sandia National Laboratories, Albuquerque, New Mexico 87185-0665

CERTIFICATE

File No. 51546
LIMITED

THERMOCOUPLE	TYPE K - STD
Model No.	KQIN-116-144
Serial No.	11
Procedure No.	CP – TC (07/22/98)
Lab Conditions:	Temperature: 23 °C ± 2 °C Humidity: 40% ± 10%
Submitted by:	Organization 06113 SNL / NM
Certified:	January 18, 2005
Expires:	January 18, 2006

COPY

The thermocouple was calibrated over the temperature range of 71 °F to 1000 °F by comparison with a Standard Platinum Resistance Thermometer (SPRT). The thermocouple was calibrated in the 9122 Dry Well, with an immersion of 6 inches. The probe mV output was measured with an 8508A Fluke Multimeter. Both the SPRT and the Multimeter have calibrations that are traceable to the National Institute of Standards and Technology (NIST) or to intrinsic standards. The thermocouple type, temperature range calibrated over and the uncertainty of a confidence level of k=2 is as follows:

TC Type	Range	Uncertainty
K	70 °F to 1000 °F	± (4 °F or 0.75% of reading) (whichever is greater)

NOTES: The tolerance statement applies only to the thermocouple, and does not include any instrument used by the owner to measure it.
The results relate only to the items tested or calibrated.

Metrologist: A. Sanchez, 02541

Approved by: L.J. Azevedo, 02541
Manager

Copy to: Submitting organization
Department 02541 file

Date received: 01/14/05
Dates tested: 01/18/05

NVLAP®
Accredited by the National Voluntary Laboratory Accreditation Program for the scope of accreditation under Lab Code 105002

PRIMARY STANDARDS LABORATORY

Sandia National Laboratories, Albuquerque, New Mexico 87185-0665

CERTIFICATE

File No. 51547
LIMITED

THERMOCOUPLE	TYPE K - STD
Model No.	KQIN-116-144
Serial No.	12
Procedure No.	CP – TC (07/22/98)
Lab Conditions:	Temperature: 23 °C ± 2 °C Humidity: 40% ± 10%
Submitted by:	Organization 06113 SNL / NM
Certified:	January 18, 2005
Expires:	January 18, 2006

COPY

The thermocouple was calibrated over the temperature range of 71 °F to 1000 °F by comparison with a Standard Platinum Resistance Thermometer (SPRT). The thermocouple was calibrated in the 9122 Dry Well, with an immersion of 6 inches. The probe mV output was measured with an 8508A Fluke Multimeter. Both the SPRT and the Multimeter have calibrations that are traceable to the National Institute of Standards and Technology (NIST) or to intrinsic standards. The thermocouple type, temperature range calibrated over and the uncertainty of a confidence level of k=2 is as follows:

TC Type	Range	Uncertainty
K	70 °F to 1000 °F	± (4 °F or 0.75% of reading) (whichever is greater)

NOTES: The tolerance statement applies only to the thermocouple, and does not include any instrument used by the owner to measure it.
The results relate only to the items tested or calibrated.

Metrologist: A. Sanchez, 02541

Approved by: L.J. Azevedo, 02541
Manager

Copy to: Submitting organization
Department 02541 file

Date received: 01/14/05
Dates tested: 01/18/05

NVLAP®
Accredited by the National Voluntary Laboratory Accreditation Program for the scope of accreditation under Lab Code 105002

PRIMARY STANDARDS LABORATORY

Sandia National Laboratories, Albuquerque, New Mexico 87185-0665

CERTIFICATE

File No. 51548
LIMITED

THERMOCOUPLE	TYPE K - STD
Model No.	KQIN-116-144
Serial No.	13
Procedure No.	CP – TC (07/22/98)
Lab Conditions:	Temperature: 23 °C ± 2 °C Humidity: 40% ± 10%
Submitted by:	Organization 06113 SNL / NM
Certified:	January 18, 2005
Expires:	January 18, 2006

COPY

The thermocouple was calibrated over the temperature range of 71 °F to 1000 °F by comparison with a Standard Platinum Resistance Thermometer (SPRT). The thermocouple was calibrated in the 9122 Dry Well, with an immersion of 6 inches. The probe mV output was measured with an 8508A Fluke Multimeter. Both the SPRT and the Multimeter have calibrations that are traceable to the National Institute of Standards and Technology (NIST) or to intrinsic standards. The thermocouple type, temperature range calibrated over and the uncertainty of a confidence level of k=2 is as follows:

TC Type	Range	Uncertainty
K	70 °F to 1000 °F	± (4 °F or 0.75% of reading) (whichever is greater)

NOTES: The tolerance statement applies only to the thermocouple, and does not include any instrument used by the owner to measure it.
The results relate only to the items tested or calibrated.

Metrologist: A. Sanchez, 02541

Approved by: L.J. Azevedo, 02541
Manager

Copy to: Submitting organization
Department 02541 file

Date received: 01/14/05
Dates tested: 01/18/05

NVLAP®
Accredited by the National Voluntary Laboratory Accreditation Program for the scope of accreditation under Lab Code 105002

PRIMARY STANDARDS LABORATORY

Sandia National Laboratories, Albuquerque, New Mexico 87185-0665

CERTIFICATE

File No. 51549
LIMITED

THERMOCOUPLE	TYPE K - STD
Model No.	KQIN-116-144
Serial No.	14
Procedure No.	CP – TC (07/22/98)
Lab Conditions:	Temperature: 23 °C ± 2 °C Humidity: 40% ± 10%
Submitted by:	Organization 06113 SNL / NM
Certified:	January 18, 2005
Expires:	January 18, 2006

COPY

The thermocouple was calibrated over the temperature range of 71 °F to 1000 °F by comparison with a Standard Platinum Resistance Thermometer (SPRT). The thermocouple was calibrated in the 9122 Dry Well, with an immersion of 6 inches. The probe mV output was measured with an 8508A Fluke Multimeter. Both the SPRT and the Multimeter have calibrations that are traceable to the National Institute of Standards and Technology (NIST) or to intrinsic standards. The thermocouple type, temperature range calibrated over and the uncertainty of a confidence level of k=2 is as follows:

TC Type	Range	Uncertainty
K	70 °F to 1000 °F	± (4 °F or 0.75% of reading) (whichever is greater)

NOTES: The tolerance statement applies only to the thermocouple, and does not include any instrument used by the owner to measure it.
The results relate only to the items tested or calibrated.

A. Sanchez

Metrologist: A. Sanchez, 02541

Approved by: L.J. Azevedo, 02541
Manager

Copy to: Submitting organization
Department 02541 file

Date received: 01/14/05
Dates tested: 01/18/05

NVLAP®
Accredited by the National Voluntary Laboratory Accreditation Program for the scope of accreditation under Lab Code 105002

PRIMARY STANDARDS LABORATORY

Sandia National Laboratories, Albuquerque, New Mexico 87185-0665

CERTIFICATE

File No. 51550
LIMITED

THERMOCOUPLE	TYPE K - STD
Model No.	KQIN-116-144
Serial No.	15
Procedure No.	CP – TC (07/22/98)
Lab Conditions:	Temperature: 23 °C ± 2 °C Humidity: 40% ± 10%
Submitted by:	Organization 06113 SNL / NM
Certified:	January 18, 2005
Expires:	January 18, 2006

COPY

The thermocouple was calibrated over the temperature range of 71 °F to 1000 °F by comparison with a Standard Platinum Resistance Thermometer (SPRT). The thermocouple was calibrated in the 9122 Dry Well, with an immersion of 6 inches. The probe mV output was measured with an 8508A Fluke Multimeter. Both the SPRT and the Multimeter have calibrations that are traceable to the National Institute of Standards and Technology (NIST) or to intrinsic standards. The thermocouple type, temperature range calibrated over and the uncertainty of a confidence level of k=2 is as follows:

TC Type	Range	Uncertainty
K	70 °F to 1000 °F	± (4 °F or 0.75% of reading) (whichever is greater)

NOTES: The tolerance statement applies only to the thermocouple, and does not include any instrument used by the owner to measure it.
The results relate only to the items tested or calibrated.

Metrologist: A. Sanchez, 02541

Approved by: L.J. Azevedo, 02541
Manager

Copy to: Submitting organization
Department 02541 file

Date received: 01/14/05
Dates tested: 01/18/05

NVLAP®
Accredited by the National Voluntary Laboratory Accreditation Program for the scope of accreditation under Lab Code 105002

PRIMARY STANDARDS LABORATORY

Sandia National Laboratories, Albuquerque, New Mexico 87185-0665

CERTIFICATE

File No. 51551
LIMITED

THERMOCOUPLE	TYPE K - STD
Model No.	KQIN-116-144
Serial No.	16
Procedure No.	CP – TC (07/22/98)
Lab Conditions:	Temperature: 23 °C ± 2 °C Humidity: 40% ± 10%
Submitted by:	Organization 06113 SNL / NM
Certified:	January 18, 2005
Expires:	January 18, 2006

COPY

The thermocouple was calibrated over the temperature range of 71 °F to 1000 °F by comparison with a Standard Platinum Resistance Thermometer (SPRT). The thermocouple was calibrated in the 9122 Dry Well, with an immersion of 6 inches. The probe mV output was measured with an 8508A Fluke Multimeter. Both the SPRT and the Multimeter have calibrations that are traceable to the National Institute of Standards and Technology (NIST) or to intrinsic standards. The thermocouple type, temperature range calibrated over and the uncertainty of a confidence level of k=2 is as follows:

TC Type	Range	Uncertainty
K	70 °F to 1000 °F	± (4 °F or 0.75% of reading) (whichever is greater)

NOTES: The tolerance statement applies only to the thermocouple, and does not include any instrument used by the owner to measure it.
The results relate only to the items tested or calibrated.

Metrologist: A. Sanchez, 02541

Approved by: L.J. Azevedo, 02541
Manager

Copy to: Submitting organization
Department 02541 file

Date received: 01/14/05
Dates tested: 01/18/05

NVLAP®
Accredited by the National Voluntary Laboratory Accreditation Program for the scope of accreditation under Lab Code 105002

PRIMARY STANDARDS LABORATORY

Sandia National Laboratories, Albuquerque, New Mexico 87185-0665

CERTIFICATE

File No. 51552
LIMITED

THERMOCOUPLE	TYPE K - STD
Model No.	KQIN-116-144
Serial No.	17
Procedure No.	CP – TC (07/22/98)
Lab Conditions:	Temperature: 23 °C ± 2 °C Humidity: 40% ± 10%
Submitted by:	Organization 06113 SNL / NM
Certified:	January 18, 2005
Expires:	January 18, 2006

COPY

The thermocouple was calibrated over the temperature range of 71 °F to 1000 °F by comparison with a Standard Platinum Resistance Thermometer (SPRT). The thermocouple was calibrated in the 9122 Dry Well, with an immersion of 6 inches. The probe mV output was measured with an 8508A Fluke Multimeter. Both the SPRT and the Multimeter have calibrations that are traceable to the National Institute of Standards and Technology (NIST) or to intrinsic standards. The thermocouple type, temperature range calibrated over and the uncertainty of a confidence level of k=2 is as follows:

TC Type	Range	Uncertainty
K	70 °F to 1000 °F	± (4 °F or 0.75% of reading) (whichever is greater)

NOTES: The tolerance statement applies only to the thermocouple, and does not include any instrument used by the owner to measure it.
The results relate only to the items tested or calibrated.

Metrologist: A. Sanchez, 02541

Approved by: L.J. Azevedo, 02541
Manager

Copy to: Submitting organization
Department 02541 file

Date received: 01/14/05
Dates tested: 01/18/05

NVLAP®
Accredited by the National Voluntary Laboratory Accreditation Program for the scope of accreditation under Lab Code 105002

PRIMARY STANDARDS LABORATORY

Sandia National Laboratories, Albuquerque, New Mexico 87185-0665

CERTIFICATE

File No. 51553
LIMITED

THERMOCOUPLE	TYPE K - STD
Model No.	KQIN-116-144
Serial No.	18
Procedure No.	CP – TC (07/22/98)
Lab Conditions:	Temperature: 23 °C ± 2 °C Humidity: 40% ± 10%
Submitted by:	Organization 06113 SNL / NM
Certified:	January 18, 2005
Expires:	January 18, 2006

COPY

The thermocouple was calibrated over the temperature range of 71 °F to 1000 °F by comparison with a Standard Platinum Resistance Thermometer (SPRT). The thermocouple was calibrated in the 9122 Dry Well, with an immersion of 6 inches. The probe mV output was measured with an 8508A Fluke Multimeter. Both the SPRT and the Multimeter have calibrations that are traceable to the National Institute of Standards and Technology (NIST) or to intrinsic standards. The thermocouple type, temperature range calibrated over and the uncertainty of a confidence level of k=2 is as follows:

TC Type	Range	Uncertainty
K	70 °F to 1000 °F	± (4 °F or 0.75% of reading) (whichever is greater)

NOTES: The tolerance statement applies only to the thermocouple, and does not include any instrument used by the owner to measure it.
The results relate only to the items tested or calibrated.

Metrologist: A. Sanchez, 02541

Approved by: L.J. Azevedo, 02541
Manager

Copy to: Submitting organization
Department 02541 file

Date received: 01/14/05
Dates tested: 01/18/05

NVLAP®
Accredited by the National Voluntary Laboratory Accreditation Program for the scope of accreditation under Lab Code 105002

PRIMARY STANDARDS LABORATORY

Sandia National Laboratories, Albuquerque, New Mexico 87185-0665

CERTIFICATE

File No. 51554
LIMITED

THERMOCOUPLE	TYPE K - STD
Model No.	KQIN-116-144
Serial No.	19
Procedure No.	CP – TC (07/22/98)
Lab Conditions:	Temperature: 23 °C ± 2 °C Humidity: 40% ± 10%
Submitted by:	Organization 06113 SNL / NM
Certified:	January 18, 2005
Expires:	January 18, 2006

COPY

The thermocouple was calibrated over the temperature range of 71 °F to 1000 °F by comparison with a Standard Platinum Resistance Thermometer (SPRT). The thermocouple was calibrated in the 9122 Dry Well, with an immersion of 6 inches. The probe mV output was measured with an 8508A Fluke Multimeter. Both the SPRT and the Multimeter have calibrations that are traceable to the National Institute of Standards and Technology (NIST) or to intrinsic standards. The thermocouple type, temperature range calibrated over and the uncertainty of a confidence level of k=2 is as follows:

TC Type	Range	Uncertainty
K	70 °F to 1000 °F	± (4 °F or 0.75% of reading) (whichever is greater)

NOTES: The tolerance statement applies only to the thermocouple, and does not include any instrument used by the owner to measure it.
The results relate only to the items tested or calibrated.

Metrologist: A. Sanchez, 02541

Approved by: L.J. Azevedo, 02541
Manager

Copy to: Submitting organization
Department 02541 file

Date received: 01/14/05
Dates tested: 01/18/05

NVLAP®
Accredited by the National Voluntary Laboratory Accreditation Program for the scope of accreditation under Lab Code 105002

PRIMARY STANDARDS LABORATORY

Sandia National Laboratories, Albuquerque, New Mexico 87185-0665

CERTIFICATE

File No. 51555
LIMITED

THERMOCOUPLE	TYPE K - STD
Model No.	KQIN-116-144
Serial No.	20
Procedure No.	CP – TC (07/22/98)
Lab Conditions:	Temperature: 23 °C ± 2 °C Humidity: 40% ± 10%
Submitted by:	Organization 06113 SNL / NM
Certified:	January 18, 2005
Expires:	January 18, 2006

COPY

The thermocouple was calibrated over the temperature range of 71 °F to 1000 °F by comparison with a Standard Platinum Resistance Thermometer (SPRT). The thermocouple was calibrated in the 9122 Dry Well, with an immersion of 6 inches. The probe mV output was measured with an 8508A Fluke Multimeter. Both the SPRT and the Multimeter have calibrations that are traceable to the National Institute of Standards and Technology (NIST) or to intrinsic standards. The thermocouple type, temperature range calibrated over and the uncertainty of a confidence level of k=2 is as follows:

TC Type	Range	Uncertainty
K	70 °F to 1000 °F	± (4 °F or 0.75% of reading) (whichever is greater)

NOTES: The tolerance statement applies only to the thermocouple, and does not include any instrument used by the owner to measure it.
The results relate only to the items tested or calibrated.

Metrologist: A. Sanchez, 02541

Approved by: L.J. Azevedo, 02541
Manager

Copy to: Submitting organization
Department 02541 file

Date received: 01/14/05
Dates tested: 01/18/05

NVLAP®
Accredited by the National Voluntary Laboratory Accreditation Program
for the scope of accreditation under Lab Code 105002

PRIMARY STANDARDS LABORATORY

Sandia National Laboratories, Albuquerque, New Mexico 87185-0665

CERTIFICATE

File No. 51556
LIMITED

THERMOCOUPLE	TYPE K - STD
Model No.	KQIN-116-144
Serial No.	21
Procedure No.	CP – TC (07/22/98)
Lab Conditions:	Temperature: 23 °C ± 2 °C Humidity: 40% ± 10%
Submitted by:	Organization 06113 SNL / NM
Certified:	January 26, 2005
Expires:	January 26, 2006

COPY

The thermocouple was calibrated over the temperature range of 71 °F to 1000 °F by comparison with a Standard Platinum Resistance Thermometer (SPRT). The thermocouple was calibrated in the 9122 Dry Well, with an immersion of 6 inches. The probe mV output was measured with an 8508A Fluke Multimeter. Both the SPRT and the Multimeter have calibrations that are traceable to the National Institute of Standards and Technology (NIST) or to intrinsic standards. The thermocouple type, temperature range calibrated over and the uncertainty of a confidence level of k=2 is as follows:

TC Type	Range	Uncertainty
K	70 °F to 1000 °F	± (4 °F or 0.75% of reading) (whichever is greater)

NOTES: The tolerance statement applies only to the thermocouple, and does not include any instrument used by the owner to measure it.
The results relate only to the items tested or calibrated.

Metrologist: A. Sanchez, 02541

Approved by: L.J. Azevedo, 02541
Manager

Copy to: Submitting organization
Department 02541 file

Date received: 01/14/05
Dates tested: 01/26/05

NVLAP®
Accredited by the National Voluntary Laboratory Accreditation Program for the scope of accreditation under Lab Code 105002

PRIMARY STANDARDS LABORATORY

Sandia National Laboratories, Albuquerque, New Mexico 87185-0665

CERTIFICATE

File No. 51557
LIMITED

THERMOCOUPLE	TYPE K - STD
Model No.	KQIN-116-144
Serial No.	22
Procedure No.	CP – TC (07/22/98)
Lab Conditions:	Temperature: 23 °C ± 2 °C Humidity: 40% ± 10%
Submitted by:	Organization 06113 SNL / NM
Certified:	January 26, 2005
Expires:	January 26, 2006

COPY

The thermocouple was calibrated over the temperature range of 71 °F to 1000 °F by comparison with a Standard Platinum Resistance Thermometer (SPRT). The thermocouple was calibrated in the 9122 Dry Well, with an immersion of 6 inches. The probe mV output was measured with an 8508A Fluke Multimeter. Both the SPRT and the Multimeter have calibrations that are traceable to the National Institute of Standards and Technology (NIST) or to intrinsic standards. The thermocouple type, temperature range calibrated over and the uncertainty of a confidence level of k=2 is as follows:

TC Type	Range	Uncertainty
K	70 °F to 1000 °F	± (4 °F or 0.75% of reading) (whichever is greater)

NOTES: The tolerance statement applies only to the thermocouple, and does not include any instrument used by the owner to measure it.
The results relate only to the items tested or calibrated.

Metrologist: A. Sanchez, 02541

Approved by: L.J. Azevedo, 02541
Manager

Copy to: Submitting organization
Department 02541 file

Date received: 01/14/05
Dates tested: 01/26/05

NVLAP®
Accredited by the National Voluntary Laboratory Accreditation Program for the scope of accreditation under Lab Code 105002

PRIMARY STANDARDS LABORATORY

Sandia National Laboratories, Albuquerque, New Mexico 87185-0665

CERTIFICATE

File No. 51558
LIMITED

THERMOCOUPLE	TYPE K - STD
Model No.	KQIN-116-144
Serial No.	23
Procedure No.	CP – TC (07/22/98)
Lab Conditions:	Temperature: 23 °C ± 2 °C Humidity: 40% ± 10%
Submitted by:	Organization 06113 SNL / NM
Certified:	January 26, 2005
Expires:	January 26, 2006

COPY

The thermocouple was calibrated over the temperature range of 71 °F to 1000 °F by comparison with a Standard Platinum Resistance Thermometer (SPRT). The thermocouple was calibrated in the 9122 Dry Well, with an immersion of 6 inches. The probe mV output was measured with an 8508A Fluke Multimeter. Both the SPRT and the Multimeter have calibrations that are traceable to the National Institute of Standards and Technology (NIST) or to intrinsic standards. The thermocouple type, temperature range calibrated over and the uncertainty of a confidence level of k=2 is as follows:

TC Type	Range	Uncertainty
K	70 °F to 1000 °F	± (4 °F or 0.75% of reading) (whichever is greater)

NOTES: The tolerance statement applies only to the thermocouple, and does not include any instrument used by the owner to measure it.
The results relate only to the items tested or calibrated.

Metrologist: A. Sanchez, 02541

Approved by: L.J. Azevedo, 02541
Manager

Copy to: Submitting organization
Department 02541 file

Date received: 01/14/05
Dates tested: 01/26/05

NVLAP®
Accredited by the National Voluntary Laboratory Accreditation Program
for the scope of accreditation under Lab Code 105002

PRIMARY STANDARDS LABORATORY

Sandia National Laboratories, Albuquerque, New Mexico 87185-0665

CERTIFICATE

File No. 51559
LIMITED

THERMOCOUPLE	TYPE K - STD	
Model No.	KQIN-116-144	
Serial No.	24	
Procedure No.	CP – TC (07/22/98)	
Lab Conditions:	Temperature: 23 °C ± 2 °C	Humidity: 40% ± 10%
Submitted by:	Organization 06113 SNL / NM	
Certified:	January 26, 2005	
Expires:	January 26, 2006	

COPY

The thermocouple was calibrated over the temperature range of 71 °F to 1000 °F by comparison with a Standard Platinum Resistance Thermometer (SPRT). The thermocouple was calibrated in the 9122 Dry Well, with an immersion of 6 inches. The probe mV output was measured with an 8508A Fluke Multimeter. Both the SPRT and the Multimeter have calibrations that are traceable to the National Institute of Standards and Technology (NIST) or to intrinsic standards. The thermocouple type, temperature range calibrated over and the uncertainty of a confidence level of k=2 is as follows:

TC Type	Range	Uncertainty
K	70 °F to 1000 °F	± (4 °F or 0.75% of reading) (whichever is greater)

NOTES: The tolerance statement applies only to the thermocouple, and does not include any instrument used by the owner to measure it.
The results relate only to the items tested or calibrated.

Metrologist: A. Sanchez, 02541

Approved by: L.J. Azevedo, 02541
Manager

Copy to: Submitting organization
Department 02541 file

Date received: 01/14/05
Dates tested: 01/26/05

NVLAP®
Accredited by the National Voluntary Laboratory Accreditation Program for the scope of accreditation under Lab Code 105002

PRIMARY STANDARDS LABORATORY

Sandia National Laboratories, Albuquerque, New Mexico 87185-0665

CERTIFICATE

File No. 51560
LIMITED

THERMOCOUPLE	TYPE K - STD
Model No.	KQIN-116-144
Serial No.	25
Procedure No.	CP – TC (07/22/98)
Lab Conditions:	Temperature: 23 °C ± 2 °C Humidity: 40% ± 10%
Submitted by:	Organization 06113 SNL / NM
Certified:	January 26, 2005
Expires:	January 26, 2006

COPY

The thermocouple was calibrated over the temperature range of 71 °F to 1000 °F by comparison with a Standard Platinum Resistance Thermometer (SPRT). The thermocouple was calibrated in the 9122 Dry Well, with an immersion of 6 inches. The probe mV output was measured with an 8508A Fluke Multimeter. Both the SPRT and the Multimeter have calibrations that are traceable to the National Institute of Standards and Technology (NIST) or to intrinsic standards. The thermocouple type, temperature range calibrated over and the uncertainty of a confidence level of k=2 is as follows:

TC Type	Range	Uncertainty
K	70 °F to 1000 °F	± (4 °F or 0.75% of reading) (whichever is greater)

NOTES: The tolerance statement applies only to the thermocouple, and does not include any instrument used by the owner to measure it.
The results relate only to the items tested or calibrated.

Metrologist: A. Sanchez, 02541

Approved by: L.J. Azevedo, 02541
Manager

Copy to: Submitting organization
Department 02541 file

Date received: 01/14/05
Dates tested: 01/26/05

Accredited by the National Voluntary Laboratory Accreditation Program for the scope of accreditation under Lab Code 105002

PRIMARY STANDARDS LABORATORY

Sandia National Laboratories, Albuquerque, New Mexico 87185-0665

CERTIFICATE

File No. 51561
LIMITED

THERMOCOUPLE	TYPE K - STD
Model No.	KQIN-116-144
Serial No.	26
Procedure No.	CP – TC (07/22/98)
Lab Conditions:	Temperature: 23 °C ± 2 °C Humidity: 40% ± 10%
Submitted by:	Organization 06113 SNL / NM
Certified:	January 26, 2005
Expires:	January 26, 2006

COPY

The thermocouple was calibrated over the temperature range of 71 °F to 1000 °F by comparison with a Standard Platinum Resistance Thermometer (SPRT). The thermocouple was calibrated in the 9122 Dry Well, with an immersion of 6 inches. The probe mV output was measured with an 8508A Fluke Multimeter. Both the SPRT and the Multimeter have calibrations that are traceable to the National Institute of Standards and Technology (NIST) or to intrinsic standards. The thermocouple type, temperature range calibrated over and the uncertainty of a confidence level of k=2 is as follows:

TC Type	Range	Uncertainty
K	70 °F to 1000 °F	± (4 °F or 0.75% of reading) (whichever is greater)

NOTES: The tolerance statement applies only to the thermocouple, and does not include any instrument used by the owner to measure it.
The results relate only to the items tested or calibrated.

Metrologist: A. Sanchez, 02541

Approved by: L.J. Azevedo, 02541
Manager

Copy to: Submitting organization
Department 02541 file

Date received: 01/14/05
Dates tested: 01/26/05

NVLAP®
Accredited by the National Voluntary Laboratory Accreditation Program for the scope of accreditation under Lab Code 105002

PRIMARY STANDARDS LABORATORY

Sandia National Laboratories, Albuquerque, New Mexico 87185-0665

CERTIFICATE

File No. 51562
LIMITED

THERMOCOUPLE	TYPE K - STD
Model No.	KQIN-116-144
Serial No.	27
Procedure No.	CP – TC (07/22/98)
Lab Conditions:	Temperature: 23 °C ± 2 °C Humidity: 40% ± 10%
Submitted by:	Organization 06113 SNL / NM
Certified:	January 26, 2005
Expires:	January 26, 2006

COPY

The thermocouple was calibrated over the temperature range of 71 °F to 1000 °F by comparison with a Standard Platinum Resistance Thermometer (SPRT). The thermocouple was calibrated in the 9122 Dry Well, with an immersion of 6 inches. The probe mV output was measured with an 8508A Fluke Multimeter. Both the SPRT and the Multimeter have calibrations that are traceable to the National Institute of Standards and Technology (NIST) or to intrinsic standards. The thermocouple type, temperature range calibrated over and the uncertainty of a confidence level of k=2 is as follows:

TC Type	Range	Uncertainty
K	70 °F to 1000 °F	± (4 °F or 0.75% of reading) (whichever is greater)

NOTES: The tolerance statement applies only to the thermocouple, and does not include any instrument used by the owner to measure it.
The results relate only to the items tested or calibrated.

Metrologist: A. Sanchez, 02541

Approved by: L.J. Azevedo, 02541
Manager

Copy to: Submitting organization
Department 02541 file

Date received: 01/14/05
Dates tested: 01/26/05

NVLAP®
Accredited by the National Voluntary Laboratory Accreditation Program
for the scope of accreditation under Lab Code 105002

PRIMARY STANDARDS LABORATORY

Sandia National Laboratories, Albuquerque, New Mexico 87185-0665

CERTIFICATE

File No. 51563
LIMITED

THERMOCOUPLE	TYPE K - STD
Model No.	KQIN-116-144
Serial No.	28
Procedure No.	CP – TC (07/22/98)
Lab Conditions:	Temperature: 23 °C ± 2 °C Humidity: 40% ± 10%
Submitted by:	Organization 06113 SNL / NM
Certified:	January 26, 2005
Expires:	January 26, 2006

COPY

The thermocouple was calibrated over the temperature range of 71 °F to 1000 °F by comparison with a Standard Platinum Resistance Thermometer (SPRT). The thermocouple was calibrated in the 9122 Dry Well, with an immersion of 6 inches. The probe mV output was measured with an 8508A Fluke Multimeter. Both the SPRT and the Multimeter have calibrations that are traceable to the National Institute of Standards and Technology (NIST) or to intrinsic standards. The thermocouple type, temperature range calibrated over and the uncertainty of a confidence level of k=2 is as follows:

TC Type	Range	Uncertainty
K	70 °F to 1000 °F	± (4 °F or 0.75% of reading) (whichever is greater)

NOTES: The tolerance statement applies only to the thermocouple, and does not include any instrument used by the owner to measure it.
The results relate only to the items tested or calibrated.

Metrologist: A. Sanchez, 02541

Approved by: L.J. Azevedo, 02541
Manager

Copy to: Submitting organization
Department 02541 file

Date received: 01/14/05
Dates tested: 01/26/05

Accredited by the National Voluntary Laboratory Accreditation Program for the scope of accreditation under Lab Code 105002

PRIMARY STANDARDS LABORATORY

Sandia National Laboratories, Albuquerque, New Mexico 87185-0665

CERTIFICATE

File No. 51564
LIMITED

THERMOCOUPLE	TYPE K - STD
Model No.	KQIN-116-144
Serial No.	29
Procedure No.	CP – TC (07/22/98)
Lab Conditions:	Temperature: 23 °C ± 2 °C Humidity: 40% ± 10%
Submitted by:	Organization 06113 SNL / NM
Certified:	January 26, 2005
Expires:	January 26, 2006

COPY

The thermocouple was calibrated over the temperature range of 71 °F to 1000 °F by comparison with a Standard Platinum Resistance Thermometer (SPRT). The thermocouple was calibrated in the 9122 Dry Well, with an immersion of 6 inches. The probe mV output was measured with an 8508A Fluke Multimeter. Both the SPRT and the Multimeter have calibrations that are traceable to the National Institute of Standards and Technology (NIST) or to intrinsic standards. The thermocouple type, temperature range calibrated over and the uncertainty of a confidence level of k=2 is as follows:

TC Type	Range	Uncertainty
K	70 °F to 1000 °F	± (4 °F or 0.75% of reading) (whichever is greater)

NOTES: The tolerance statement applies only to the thermocouple, and does not include any instrument used by the owner to measure it.
The results relate only to the items tested or calibrated.

Metrologist: A. Sanchez, 02541

Approved by: L.J. Azevedo, 02541
Manager

Copy to: Submitting organization
Department 02541 file

Date received: 01/14/05
Dates tested: 01/26/05

NVLAP®
Accredited by the National Voluntary Laboratory Accreditation Program for the scope of accreditation under Lab Code 105002

PRIMARY STANDARDS LABORATORY

Sandia National Laboratories, Albuquerque, New Mexico 87185-0665

CERTIFICATE

File No. 51565
LIMITED

THERMOCOUPLE	TYPE K - STD
Model No.	KQIN-116-144
Serial No.	30
Procedure No.	CP – TC (07/22/98)
Lab Conditions:	Temperature: 23 °C ± 2 °C Humidity: 40% ± 10%
Submitted by:	Organization 06113 SNL / NM
Certified:	January 26, 2005
Expires:	January 26, 2006

COPY

The thermocouple was calibrated over the temperature range of 71 °F to 1000 °F by comparison with a Standard Platinum Resistance Thermometer (SPRT). The thermocouple was calibrated in the 9122 Dry Well, with an immersion of 6 inches. The probe mV output was measured with an 8508A Fluke Multimeter. Both the SPRT and the Multimeter have calibrations that are traceable to the National Institute of Standards and Technology (NIST) or to intrinsic standards. The thermocouple type, temperature range calibrated over and the uncertainty of a confidence level of k=2 is as follows:

TC Type	Range	Uncertainty
K	70 °F to 1000 °F	± (4 °F or 0.75% of reading) (whichever is greater)

NOTES: The tolerance statement applies only to the thermocouple, and does not include any instrument used by the owner to measure it.
The results relate only to the items tested or calibrated.

Metrologist: A. Sanchez, 02541

Approved by: L.J. Azevedo, 02541
Manager

Copy to: Submitting organization
Department 02541 file

Date received: 01/14/05
Dates tested: 01/26/05

NVLAP®
Accredited by the National Voluntary Laboratory Accreditation Program
for the scope of accreditation under Lab Code 105002

PRIMARY STANDARDS LABORATORY

Sandia National Laboratories, Albuquerque, New Mexico 87185-0665

CERTIFICATE

File No. 51566
LIMITED

THERMOCOUPLE	TYPE K - STD
Model No.	KQIN-116-144
Serial No.	31
Procedure No.	CP – TC (07/22/98)
Lab Conditions:	Temperature: 23 °C ± 2 °C Humidity: 40% ± 10%
Submitted by:	Organization 06113 SNL / NM
Certified:	January 26, 2005
Expires:	January 26, 2006

COPY

The thermocouple was calibrated over the temperature range of 71 °F to 1000 °F by comparison with a Standard Platinum Resistance Thermometer (SPRT). The thermocouple was calibrated in the 9122 Dry Well, with an immersion of 6 inches. The probe mV output was measured with an 8508A Fluke Multimeter. Both the SPRT and the Multimeter have calibrations that are traceable to the National Institute of Standards and Technology (NIST) or to intrinsic standards. The thermocouple type, temperature range calibrated over and the uncertainty of a confidence level of k=2 is as follows:

TC Type	Range	Uncertainty
K	70 °F to 1000 °F	± (4 °F or 0.75% of reading) (whichever is greater)

NOTES: The tolerance statement applies only to the thermocouple, and does not include any instrument used by the owner to measure it.
The results relate only to the items tested or calibrated.

Metrologist: A. Sanchez, 02541

Approved by: L.J. Azevedo, 02541
Manager

Copy to: Submitting organization
Department 02541 file

Date received: 01/14/05
Dates tested: 01/26/05

NVLAP®
Accredited by the National Voluntary Laboratory Accreditation Program for the scope of accreditation under Lab Code 105002

PRIMARY STANDARDS LABORATORY

Sandia National Laboratories, Albuquerque, New Mexico 87185-0665

CERTIFICATE

File No. 51567
LIMITED

THERMOCOUPLE	TYPE K - STD
Model No.	KQIN-116-144
Serial No.	32
Procedure No.	CP – TC (07/22/98)
Lab Conditions:	Temperature: 23 °C ± 2 °C Humidity: 40% ± 10%
Submitted by:	Organization 06113 SNL / NM
Certified:	January 26, 2005
Expires:	January 26, 2006

COPY

The thermocouple was calibrated over the temperature range of 71 °F to 1000 °F by comparison with a Standard Platinum Resistance Thermometer (SPRT). The thermocouple was calibrated in the 9122 Dry Well, with an immersion of 6 inches. The probe mV output was measured with an 8508A Fluke Multimeter. Both the SPRT and the Multimeter have calibrations that are traceable to the National Institute of Standards and Technology (NIST) or to intrinsic standards. The thermocouple type, temperature range calibrated over and the uncertainty of a confidence level of k=2 is as follows:

TC Type	Range	Uncertainty
K	70 °F to 1000 °F	± (4 °F or 0.75% of reading) (whichever is greater)

NOTES: The tolerance statement applies only to the thermocouple, and does not include any instrument used by the owner to measure it.
The results relate only to the items tested or calibrated.

Metrologist: A. Sanchez, 02541

Approved by: L.J. Azevedo, 02541
Manager

Copy to: Submitting organization
Department 02541 file

Date received: 01/14/05
Dates tested: 01/26/05

NVLAP®
Accredited by the National Voluntary Laboratory Accreditation Program for the scope of accreditation under Lab Code 105002

PRIMARY STANDARDS LABORATORY

Sandia National Laboratories, Albuquerque, New Mexico 87185-0665

CERTIFICATE

File No. 51568
LIMITED

THERMOCOUPLE	TYPE K - STD
Model No.	KQIN-116-144
Serial No.	33
Procedure No.	CP – TC (07/22/98)
Lab Conditions:	Temperature: 23 °C ± 2 °C Humidity: 40% ± 10%
Submitted by:	Organization 06113 SNL / NM
Certified:	January 26, 2005
Expires:	January 26, 2006

COPY

The thermocouple was calibrated over the temperature range of 71 °F to 1000 °F by comparison with a Standard Platinum Resistance Thermometer (SPRT). The thermocouple was calibrated in the 9122 Dry Well, with an immersion of 6 inches. The probe mV output was measured with an 8508A Fluke Multimeter. Both the SPRT and the Multimeter have calibrations that are traceable to the National Institute of Standards and Technology (NIST) or to intrinsic standards. The thermocouple type, temperature range calibrated over and the uncertainty of a confidence level of k=2 is as follows:

TC Type	Range	Uncertainty
K	70 °F to 1000 °F	± (4 °F or 0.75% of reading) (whichever is greater)

NOTES: The tolerance statement applies only to the thermocouple, and does not include any instrument used by the owner to measure it.
The results relate only to the items tested or calibrated.

Metrologist: A. Sanchez, 02541

Approved by: L.J. Azevedo, 02541
Manager

Copy to: Submitting organization
Department 02541 file

Date received: 01/14/05
Dates tested: 01/26/05

NVLAP®
Accredited by the National Voluntary Laboratory Accreditation Program for the scope of accreditation under Lab Code 105002

PRIMARY STANDARDS LABORATORY

Sandia National Laboratories, Albuquerque, New Mexico 87185-0665

CERTIFICATE

File No. 51569
LIMITED

THERMOCOUPLE	TYPE K - STD
Model No.	KQIN-116-144
Serial No.	34
Procedure No.	CP – TC (07/22/98)
Lab Conditions:	Temperature: 23 °C ± 2 °C Humidity: 40% ± 10%
Submitted by:	Organization 06113 SNL / NM
Certified:	January 26, 2005
Expires:	January 26, 2006

COPY

The thermocouple was calibrated over the temperature range of 71 °F to 1000 °F by comparison with a Standard Platinum Resistance Thermometer (SPRT). The thermocouple was calibrated in the 9122 Dry Well, with an immersion of 6 inches. The probe mV output was measured with an 8508A Fluke Multimeter. Both the SPRT and the Multimeter have calibrations that are traceable to the National Institute of Standards and Technology (NIST) or to intrinsic standards. The thermocouple type, temperature range calibrated over and the uncertainty of a confidence level of k=2 is as follows:

TC Type	Range	Uncertainty
K	70 °F to 1000 °F	± (4 °F or 0.75% of reading) (whichever is greater)

NOTES: The tolerance statement applies only to the thermocouple, and does not include any instrument used by the owner to measure it.
The results relate only to the items tested or calibrated.

Metrologist: A. Sanchez, 02541

Approved by: L.J. Azevedo, 02541
Manager

Copy to: Submitting organization
Department 02541 file

Date received: 01/14/05
Dates tested: 01/26/05

NVLAP®
Accredited by the National Voluntary Laboratory Accreditation Program for the scope of accreditation under Lab Code 105002

PRIMARY STANDARDS LABORATORY

Sandia National Laboratories, Albuquerque, New Mexico 87185-0665

CERTIFICATE

File No. 51570
LIMITED

THERMOCOUPLE	TYPE K - STD
Model No.	KQIN-116-144
Serial No.	35
Procedure No.	CP – TC (07/22/98)
Lab Conditions:	Temperature: 23 °C ± 2 °C Humidity: 40% ± 10%
Submitted by:	Organization 06113 SNL / NM
Certified:	January 26, 2005
Expires:	January 26, 2006

COPY

The thermocouple was calibrated over the temperature range of 71 °F to 1000 °F by comparison with a Standard Platinum Resistance Thermometer (SPRT). The thermocouple was calibrated in the 9122 Dry Well, with an immersion of 6 inches. The probe mV output was measured with an 8508A Fluke Multimeter. Both the SPRT and the Multimeter have calibrations that are traceable to the National Institute of Standards and Technology (NIST) or to intrinsic standards. The thermocouple type, temperature range calibrated over and the uncertainty of a confidence level of k=2 is as follows:

TC Type	Range	Uncertainty
K	70 °F to 1000 °F	± (4 °F or 0.75% of reading) (whichever is greater)

NOTES: The tolerance statement applies only to the thermocouple, and does not include any instrument used by the owner to measure it.
The results relate only to the items tested or calibrated.

Metrologist: A. Sanchez, 02541

Approved by: L.J. Azevedo, 02541
Manager

Copy to: Submitting organization
Department 02541 file

Date received: 01/14/05
Dates tested: 01/26/05

NVLAP®
Accredited by the National Voluntary Laboratory Accreditation Program for the scope of accreditation under Lab Code 105002

PRIMARY STANDARDS LABORATORY

Sandia National Laboratories, Albuquerque, New Mexico 87185-0665

CERTIFICATE

File No. 51571
LIMITED

THERMOCOUPLE	TYPE K - STD
Model No.	KQIN-116-144
Serial No.	36
Procedure No.	CP – TC (07/22/98)
Lab Conditions:	Temperature: 23 °C ± 2 °C Humidity: 40% ± 10%
Submitted by:	Organization 06113 SNL / NM
Certified:	January 26, 2005
Expires:	January 26, 2006

COPY

The thermocouple was calibrated over the temperature range of 71 °F to 1000 °F by comparison with a Standard Platinum Resistance Thermometer (SPRT). The thermocouple was calibrated in the 9122 Dry Well, with an immersion of 6 inches. The probe mV output was measured with an 8508A Fluke Multimeter. Both the SPRT and the Multimeter have calibrations that are traceable to the National Institute of Standards and Technology (NIST) or to intrinsic standards. The thermocouple type, temperature range calibrated over and the uncertainty of a confidence level of k=2 is as follows:

TC Type	Range	Uncertainty
K	70 °F to 1000 °F	± (4 °F or 0.75% of reading) (whichever is greater)

NOTES: The tolerance statement applies only to the thermocouple, and does not include any instrument used by the owner to measure it.
The results relate only to the items tested or calibrated.

Metrologist: A. Sanchez, 02541

Approved by: L.J. Azevedo, 02541
Manager

Copy to: Submitting organization
Department 02541 file

Date received: 01/14/05
Dates tested: 01/26/05

NVLAP®
Accredited by the National Voluntary Laboratory Accreditation Program for the scope of accreditation under Lab Code 105002

PRIMARY STANDARDS LABORATORY

Sandia National Laboratories, Albuquerque, New Mexico 87185-0665

CERTIFICATE

File No. 51572
LIMITED

THERMOCOUPLE	TYPE K - STD
Model No.	KQIN-116-144
Serial No.	37
Procedure No.	CP – TC (07/22/98)
Lab Conditions:	Temperature: 23 °C ± 2 °C Humidity: 40% ± 10%
Submitted by:	Organization 06113 SNL / NM
Certified:	January 26, 2005
Expires:	January 26, 2006

COPY

The thermocouple was calibrated over the temperature range of 71 °F to 1000 °F by comparison with a Standard Platinum Resistance Thermometer (SPRT). The thermocouple was calibrated in the 9122 Dry Well, with an immersion of 6 inches. The probe mV output was measured with an 8508A Fluke Multimeter. Both the SPRT and the Multimeter have calibrations that are traceable to the National Institute of Standards and Technology (NIST) or to intrinsic standards. The thermocouple type, temperature range calibrated over and the uncertainty of a confidence level of k=2 is as follows:

TC Type	Range	Uncertainty
K	70 °F to 1000 °F	± (4 °F or 0.75% of reading) (whichever is greater)

NOTES: The tolerance statement applies only to the thermocouple, and does not include any instrument used by the owner to measure it.
The results relate only to the items tested or calibrated.

Metrologist: A. Sanchez, 02541

Approved by: L.J. Azevedo, 02541
Manager

Copy to: Submitting organization
Department 02541 file

Date received: 01/14/05
Dates tested: 01/26/05

NVLAP®
Accredited by the National Voluntary Laboratory Accreditation Program for the scope of accreditation under Lab Code 105002

PRIMARY STANDARDS LABORATORY

Sandia National Laboratories, Albuquerque, New Mexico 87185-0665

CERTIFICATE

File No. 51573
LIMITED

THERMOCOUPLE	TYPE K - STD
Model No.	KQIN-116-144
Serial No.	38
Procedure No.	CP – TC (07/22/98)
Lab Conditions:	Temperature: 23 °C ± 2 °C Humidity: 40% ± 10%
Submitted by:	Organization 06113 SNL / NM
Certified:	January 26, 2005
Expires:	January 26, 2006

COPY

The thermocouple was calibrated over the temperature range of 71 °F to 1000 °F by comparison with a Standard Platinum Resistance Thermometer (SPRT). The thermocouple was calibrated in the 9122 Dry Well, with an immersion of 6 inches. The probe mV output was measured with an 8508A Fluke Multimeter. Both the SPRT and the Multimeter have calibrations that are traceable to the National Institute of Standards and Technology (NIST) or to intrinsic standards. The thermocouple type, temperature range calibrated over and the uncertainty of a confidence level of k=2 is as follows:

TC Type	Range	Uncertainty
K	70 °F to 1000 °F	± (4 °F or 0.75% of reading) (whichever is greater)

NOTES: The tolerance statement applies only to the thermocouple, and does not include any instrument used by the owner to measure it.
The results relate only to the items tested or calibrated.

Metrologist: A. Sanchez, 02541

Approved by: L.J. Azevedo, 02541
Manager

Copy to: Submitting organization
Department 02541 file

Date received: 01/14/05
Dates tested: 01/26/05

NVLAP®
Accredited by the National Voluntary Laboratory Accreditation Program for the scope of accreditation under Lab Code 105002

PRIMARY STANDARDS LABORATORY

Sandia National Laboratories, Albuquerque, New Mexico 87185-0665

CERTIFICATE

File No. 51574
LIMITED

THERMOCOUPLE	TYPE K - STD
Model No.	KQIN-116-144
Serial No.	39
Procedure No.	CP – TC (07/22/98)
Lab Conditions:	Temperature: 23 °C ± 2 °C Humidity: 40% ± 10%
Submitted by:	Organization 06113 SNL / NM
Certified:	January 26, 2005
Expires:	January 26, 2006

COPY

The thermocouple was calibrated over the temperature range of 71 °F to 1000 °F by comparison with a Standard Platinum Resistance Thermometer (SPRT). The thermocouple was calibrated in the 9122 Dry Well, with an immersion of 6 inches. The probe mV output was measured with an 8508A Fluke Multimeter. Both the SPRT and the Multimeter have calibrations that are traceable to the National Institute of Standards and Technology (NIST) or to intrinsic standards. The thermocouple type, temperature range calibrated over and the uncertainty of a confidence level of k=2 is as follows:

TC Type	Range	Uncertainty
K	70 °F to 1000 °F	± (4 °F or 0.75% of reading) (whichever is greater)

NOTES: The tolerance statement applies only to the thermocouple, and does not include any instrument used by the owner to measure it.
The results relate only to the items tested or calibrated.

Metrologist: A. Sanchez, 02541

Approved by: L.J. Azevedo, 02541
Manager

Copy to: Submitting organization
Department 02541 file

Date received: 01/14/05
Dates tested: 01/26/05

NVLAP®
Accredited by the National Voluntary Laboratory Accreditation Program for the scope of accreditation under Lab Code 105002

PRIMARY STANDARDS LABORATORY

Sandia National Laboratories, Albuquerque, New Mexico 87185-0665

CERTIFICATE

File No. 51575
LIMITED

THERMOCOUPLE	TYPE K - STD
Model No.	KQIN-116-144
Serial No.	40
Procedure No.	CP – TC (07/22/98)
Lab Conditions:	Temperature: 23 °C ± 2 °C Humidity: 40% ± 10%
Submitted by:	Organization 06113 SNL / NM
Certified:	January 26, 2005
Expires:	January 26, 2006

COPY

The thermocouple was calibrated over the temperature range of 71 °F to 1000 °F by comparison with a Standard Platinum Resistance Thermometer (SPRT). The thermocouple was calibrated in the 9122 Dry Well, with an immersion of 6 inches. The probe mV output was measured with an 8508A Fluke Multimeter. Both the SPRT and the Multimeter have calibrations that are traceable to the National Institute of Standards and Technology (NIST) or to intrinsic standards. The thermocouple type, temperature range calibrated over and the uncertainty of a confidence level of k=2 is as follows:

TC Type	Range	Uncertainty
K	70 °F to 1000 °F	± (4 °F or 0.75% of reading) (whichever is greater)

NOTES: The tolerance statement applies only to the thermocouple, and does not include any instrument used by the owner to measure it.
The results relate only to the items tested or calibrated.

Metrologist: A. Sanchez, 02541

Approved by: L.J. Azevedo, 02541
Manager

Copy to: Submitting organization
Department 02541 file

Date received: 01/14/05
Dates tested: 01/26/05

NVLAP®
Accredited by the National Voluntary Laboratory Accreditation Program for the scope of accreditation under Lab Code 105002

PRIMARY STANDARDS LABORATORY

Sandia National Laboratories, Albuquerque, New Mexico 87185-0665

CERTIFICATE

File No. 51576
LIMITED

THERMOCOUPLE	TYPE K - STD
Model No.	KQIN-116-144
Serial No.	41
Procedure No.	CP – TC (07/22/98)
Lab Conditions:	Temperature: 23 °C ± 2 °C Humidity: 40% ± 10%
Submitted by:	Organization 06113 SNL / NM
Certified:	January 26, 2005
Expires:	January 26, 2006

COPY

The thermocouple was calibrated over the temperature range of 71 °F to 1000 °F by comparison with a Standard Platinum Resistance Thermometer (SPRT). The thermocouple was calibrated in the 9122 Dry Well, with an immersion of 6 inches. The probe mV output was measured with an 8508A Fluke Multimeter. Both the SPRT and the Multimeter have calibrations that are traceable to the National Institute of Standards and Technology (NIST) or to intrinsic standards. The thermocouple type, temperature range calibrated over and the uncertainty of a confidence level of k=2 is as follows:

TC Type	Range	Uncertainty
K	70 °F to 1000 °F	± (4 °F or 0.75% of reading) (whichever is greater)

NOTES: The tolerance statement applies only to the thermocouple, and does not include any instrument used by the owner to measure it.
The results relate only to the items tested or calibrated.

Metrologist: A. Sanchez, 02541

Approved by: L.J. Azevedo, 02541
Manager

Copy to: Submitting organization
Department 02541 file

Date received: 01/14/05
Dates tested: 01/26/05

NVLAP®
Accredited by the National Voluntary Laboratory Accreditation Program for the scope of accreditation under Lab Code 105002

PRIMARY STANDARDS LABORATORY

Sandia National Laboratories, Albuquerque, New Mexico 87185-0665

CERTIFICATE

File No. 51577
LIMITED

THERMOCOUPLE	TYPE K - STD
Model No.	KQIN-116-144
Serial No.	42
Procedure No.	CP – TC (07/22/98)
Lab Conditions:	Temperature: 23 °C ± 2 °C Humidity: 40% ± 10%
Submitted by:	Organization 06113 SNL / NM
Certified:	January 26, 2005
Expires:	January 26, 2006

COPY

The thermocouple was calibrated over the temperature range of 71 °F to 1000 °F by comparison with a Standard Platinum Resistance Thermometer (SPRT). The thermocouple was calibrated in the 9122 Dry Well, with an immersion of 6 inches. The probe mV output was measured with an 8508A Fluke Multimeter. Both the SPRT and the Multimeter have calibrations that are traceable to the National Institute of Standards and Technology (NIST) or to intrinsic standards. The thermocouple type, temperature range calibrated over and the uncertainty of a confidence level of k=2 is as follows:

TC Type	Range	Uncertainty
K	70 °F to 1000 °F	± (4 °F or 0.75% of reading) (whichever is greater)

NOTES: The tolerance statement applies only to the thermocouple, and does not include any instrument used by the owner to measure it.
The results relate only to the items tested or calibrated.

Metrologist: A. Sanchez, 02541

Approved by: L.J. Azevedo, 02541
Manager

Copy to: Submitting organization
Department 02541 file

Date received: 01/14/05
Dates tested: 01/26/05

NVLAP®
Accredited by the National Voluntary Laboratory Accreditation Program for the scope of accreditation under Lab Code 105002

PRIMARY STANDARDS LABORATORY

Sandia National Laboratories, Albuquerque, New Mexico 87185-0665

CERTIFICATE

File No. 51578
LIMITED

THERMOCOUPLE	TYPE K - STD
Model No.	KQIN-116-144
Serial No.	43
Procedure No.	CP – TC (07/22/98)
Lab Conditions:	Temperature: 23 °C ± 2 °C Humidity: 40% ± 10%
Submitted by:	Organization 06113 SNL / NM
Certified:	January 26, 2005
Expires:	January 26, 2006

COPY

The thermocouple was calibrated over the temperature range of 71 °F to 1000 °F by comparison with a Standard Platinum Resistance Thermometer (SPRT). The thermocouple was calibrated in the 9122 Dry Well, with an immersion of 6 inches. The probe mV output was measured with an 8508A Fluke Multimeter. Both the SPRT and the Multimeter have calibrations that are traceable to the National Institute of Standards and Technology (NIST) or to intrinsic standards. The thermocouple type, temperature range calibrated over and the uncertainty of a confidence level of k=2 is as follows:

TC Type	Range	Uncertainty
K	70 °F to 1000 °F	± (4 °F or 0.75% of reading) (whichever is greater)

NOTES: The tolerance statement applies only to the thermocouple, and does not include any instrument used by the owner to measure it.
The results relate only to the items tested or calibrated.

Metrologist: A. Sanchez, 02541

Approved by: L.J. Azevedo, 02541
Manager

Copy to: Submitting organization
Department 02541 file

Date received: 01/14/05
Dates tested: 01/26/05

NVLAP®
Accredited by the National Voluntary Laboratory Accreditation Program for the scope of accreditation under Lab Code 105002

PRIMARY STANDARDS LABORATORY

Sandia National Laboratories, Albuquerque, New Mexico 87185-0665

CERTIFICATE

File No. 51579
LIMITED

THERMOCOUPLE TYPE K - STD
Model No. KQIN-116-144
Serial No. 44
Procedure No. CP – TC (07/22/98)
Lab Conditions: Temperature: 23 °C ± 2 °C Humidity: 40% ± 10%

Submitted by: Organization 06113
SNL / NM

COPY

Certified: January 26, 2005
Expires: January 26, 2006

The thermocouple was calibrated over the temperature range of 71 °F to 1000 °F by comparison with a Standard Platinum Resistance Thermometer (SPRT). The thermocouple was calibrated in the 9122 Dry Well, with an immersion of 6 inches. The probe mV output was measured with an 8508A Fluke Multimeter. Both the SPRT and the Multimeter have calibrations that are traceable to the National Institute of Standards and Technology (NIST) or to intrinsic standards. The thermocouple type, temperature range calibrated over and the uncertainty of a confidence level of k=2 is as follows:

TC Type	Range	Uncertainty
K	70 °F to 1000 °F	± (4 °F or 0.75% of reading) (whichever is greater)

NOTES: The tolerance statement applies only to the thermocouple, and does not include any instrument used by the owner to measure it.
The results relate only to the items tested or calibrated.

Metrologist: A. Sanchez, 02541

Approved by: L.J. Azevedo, 02541
Manager

Copy to: Submitting organization
Department 02541 file

Date received: 01/14/05
Dates tested: 01/26/05

NVLAP®
Accredited by the National Voluntary Laboratory Accreditation Program for the scope of accreditation under Lab Code 105002

PRIMARY STANDARDS LABORATORY

Sandia National Laboratories, Albuquerque, New Mexico 87185-0665

CERTIFICATE

File No. 51580
LIMITED

THERMOCOUPLE	TYPE K - STD
Model No.	KQIN-116-144
Serial No.	45
Procedure No.	CP – TC (07/22/98)
Lab Conditions:	Temperature: 23 °C ± 2 °C Humidity: 40% ± 10%
Submitted by:	Organization 06113 SNL / NM
Certified:	January 26, 2005
Expires:	January 26, 2006

COPY

The thermocouple was calibrated over the temperature range of 71 °F to 1000 °F by comparison with a Standard Platinum Resistance Thermometer (SPRT). The thermocouple was calibrated in the 9122 Dry Well, with an immersion of 6 inches. The probe mV output was measured with an 8508A Fluke Multimeter. Both the SPRT and the Multimeter have calibrations that are traceable to the National Institute of Standards and Technology (NIST) or to intrinsic standards. The thermocouple type, temperature range calibrated over and the uncertainty of a confidence level of k=2 is as follows:

TC Type	Range	Uncertainty
K	70 °F to 1000 °F	± (4 °F or 0.75% of reading) (whichever is greater)

NOTES: The tolerance statement applies only to the thermocouple, and does not include any instrument used by the owner to measure it.
The results relate only to the items tested or calibrated.

Metrologist: A. Sanchez, 02541

Approved by: L.J. Azevedo, 02541
Manager

Copy to: Submitting organization
Department 02541 file

Date received: 01/14/05
Dates tested: 01/26/05

NVLAP®
Accredited by the National Voluntary Laboratory Accreditation Program for the scope of accreditation under Lab Code 105002

PRIMARY STANDARDS LABORATORY

Sandia National Laboratories, Albuquerque, New Mexico 87185-0665

CERTIFICATE

File No. 51581
LIMITED

THERMOCOUPLE	TYPE K - STD
Model No.	KQIN-116-144
Serial No.	46
Procedure No.	CP – TC (07/22/98)
Lab Conditions:	Temperature: 23 °C ± 2 °C Humidity: 40% ± 10%
Submitted by:	Organization 06113 SNL / NM
Certified:	January 26, 2005
Expires:	January 26, 2006

COPY

The thermocouple was calibrated over the temperature range of 71 °F to 1000 °F by comparison with a Standard Platinum Resistance Thermometer (SPRT). The thermocouple was calibrated in the 9122 Dry Well, with an immersion of 6 inches. The probe mV output was measured with an 8508A Fluke Multimeter. Both the SPRT and the Multimeter have calibrations that are traceable to the National Institute of Standards and Technology (NIST) or to intrinsic standards. The thermocouple type, temperature range calibrated over and the uncertainty of a confidence level of k=2 is as follows:

TC Type	Range	Uncertainty
K	70 °F to 1000 °F	± (4 °F or 0.75% of reading) (whichever is greater)

NOTES: The tolerance statement applies only to the thermocouple, and does not include any instrument used by the owner to measure it.
The results relate only to the items tested or calibrated.

Metrologist: A. Sanchez, 02541

Approved by: L.J. Azevedo, 02541
Manager

Copy to: Submitting organization
Department 02541 file

Date received: 01/14/05
Dates tested: 01/26/05

NVLAP®
Accredited by the National Voluntary Laboratory Accreditation Program for the scope of accreditation under Lab Code 105002

MEASUREMENTS STANDARDS PROGRAM
SANDIA NATIONAL LABORATORIES
Albuquerque, New Mexico

General Traceability Statement: Values and the associated uncertainties supplied by the Measurements Standards Program (MSP) are traceable to one or more of the following:

1. The values of the units (either base or derived) maintained and disseminated by the National Institute of Standards and Technology (United States of America) or, in special cases and where appropriate, to the National Standards Laboratory of another nation;
2. The accepted value(s) of fundamental physical phenomena (intrinsic standards);
3. Ratio(s) or other non-maintained standards established by either a self-calibration and/or a direct calibration technique;
4. Standards maintained and disseminated by the MSP in special cases and where warranted;
5. Values and uncertainties arising from participation in a National Measurement System.

Because of inherent complexity in the calibration process and the uncertainty contribution by both standards and calibrating instruments, traceability always requires evaluation of a "traceability tree." A "traceability tree" analysis can be assembled for a specific calibration and valid for a particular and specific point in time. The "traceability tree" will include copies of relevant certificates and reports, excerpted as appropriate for brevity. However, the cost of preparation of the "traceability tree" will be charged to the requester.

Note 1: This certificate or report shall not be reproduced except in full without the advance written approval of the Measurement Standards Program at Sandia National Laboratories.

Note 2: For National Voluntary Laboratory Accreditation Program (NVLAP) accredited capabilities, the MSP at Sandia National Laboratories is accredited by NVLAP for the specific scope of accreditation under Laboratory Code 105002. This certificate or report shall not be used by the customer to claim product endorsement by NVLAP or any agency of the U. S. Government.

Note 3: The as received condition of the standard, set of standards, or measurement equipment described herein was as expected, unless otherwise noted in the body of the certificate or report.

General.Doc
3/10/96, Revision 2

Appendix H

PHOTOGRAPHS

#1: Test deck under construction.

#2: Trays ready to install in deck.

#3: Thermocouple on tray 2A.

#4: Tray 2B bare.

#5: Item 2B installing 2" air gap.

#6: Item 2B installing air gap.

#7: Item 2C installing support tape.

#8: 2" air gap on item 2D.

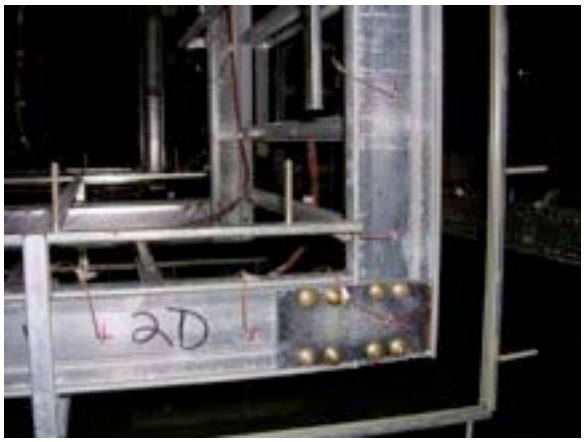

#9: 2" air gap on item 2D.

#10: Junction box supports.

#11: Junction box ready for cladding.

#12: Item 2A direct wrap installation.

#13: Installing wrap on 2A.

#14: Completing 2A wrap.

#15: 2A wrap extending through deck.

#16: 2A banding completed.

#17: Wrapping of 2B started.

#18: 2B overlap at joint.

#19: Item 2B bolt connections.

#20: Sewing joint on item 2B.

#21: Sewing end joints on 2B.

#22: Beginning to wrap item 2C.

#23: Bottom pad first.

#24: Tape wrapped 6" o.c.

#25: 3" overlap on joints (Item 2C).

#26: Side pads on 2C.

#27: 2C thermocouple at joint.

#28: Cladding 2C elbow sides.

#29: Cladding 2C elbow back.

#30: Installing 2C top pad.

#31: Banding pads at overlap (2C).

#32: Wrapping through deck penetration.

#33: 2C final pad.

#34: Banding on 2C.

#35: Installing side pad on 2D.

#36: Installing side pads on 2D.

#37: Installing side pad on corner.

#38: Side pad on 2D elbow.

#39: Installing to pad on 2D.

#40: 2D bottom pad installation.

#41: Attaching connecting bolts on 2D.

#42: Final stitching on 2D joints.

#43: Direct attachment to 2E air drop.

#44: Applying banding to 2E.

#45: Banding 2E air drop wrap.

#46: Banding 2E center joint cover.

#47: Installing 2E center support bands.

#48: Installing 2" stand-offs on item 2F.

#49: Verification of 2" thickness.

#50: 2F stand-offs complete.

#51: Wrapping 2F.

#52: Wrapping 2F.

#53: Installing bands on 2F.

#54: Installing center support bands on 2F.

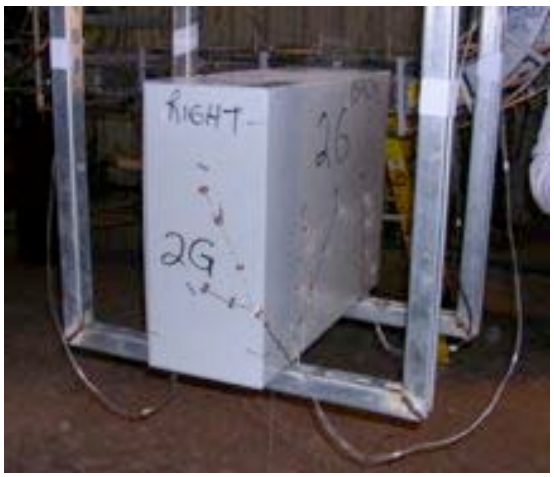

#55: Thermocouples on junction box.

#56: Thermocouples on junction box.

#57: Wrapping JB bottom.

#58: Wrapping JB sides.

#59: Wrapping junction box.

#60: Wrapping sides on JB.

#61: Stitching joints on JB.

#62: Stitching joints on JB.

#63: Banding the JB cover in place.

#64: Wrapping the JB supports.

#65: Wrapping JB supports.

#66: Applying final bands on JB.

#67: Insulating the steel deck.

#68: Item 2A complete.

#69: Item 2A complete.

#70: Item 2B complete.

#71: Item 2B complete.

#72: Item 2C complete.

#73: Item 2C complete.

#74: Item 2D complete.

#75: Item 2D complete.

#76: Item 2E complete.

#77: Item 2E complete.

#78: Item 2F complete.

#79: Item 2G complete.

#80: Item 2G complete.

#81: Completed test assembly.

#82: Completed test assembly.

#83: Placing assembly on furnace.

#84: Assembly inside furnace.

#85: Unexposed surface of test assembly.

#86: Top side of 2C elbow end.

#87: Top side of Junction Box supports.

#88: Top of 2D elbow end.

#89: top of 2D zero radius bend end.

#90: Top of 2B zero radius bend end.

#91: Thermocouple connections to computer.

#92: Start of fire exposure test.

#93: OPL QA staff.

#94: Observing test items at 17 minutes.

#95: Approaching end of test.

#96: Lifting specimen from furnace.

#97: Specimen after fire exposure.

#98: Specimen after fire exposure.

#99: Items 2A and 2C after fire exposure.

#100: Item 2F after fire exposure.

#101: Opening in item 2A.

#102: Item 2E with opening.

#103: JB with openings.

#104: JB with openings along bottom edge.

#105: Specimen ready for hose stream test.

#106: Adjusting nozzle for hose stream test.

#107: Hose stream test.

#108: Hose stream test.

#109: Item 2C with opening after hose.

#110: Item 2A with opening.

#111: Item 2B after hose.

#112: Item 2D after hose stream test.

#113: Item 2D after hose stream test.

#114: Item 2G after hose stream.

#115: Item 2C after hose stream.

#116: Items 2C and 2A after hose.

#117: Item 2C with opening.

#118: Item 2A after hose stream test.

#119: Item 2E after hose stream test.

#120: Item 2F after hose stream test.

#121: Item 2F after hose stream.

#122: Item 2A with open joints.

#123: Item 2A with openings.

#124: Item 2E after test.

#125: Bolt loose on 2D inside elbow.

#126: Item 2A being disassembled.

#127: Item 2A being unwrapped.

#128: Item 2A elbow end being unwrapped.

#129: Item 2F being disassembled.

#130: Item 2F bare.

#131: Item 2E being disassembled.

#132: Item 2E being disassembled.

#133: Item 2E bare.

#134: Item 2G being disassembled.

#135: Item 2G with bare side.

#136: showing wrinkled steel.

#137: Item 2D being opened.

#138: Item 2D being opened.

#139: Item 2D being opened.

#140 Item 2D opened.