REVISIONS					
ZONE	REV	DESCRIPTION	DATE	ARES APPROVAL	CLIENT APPROVAL

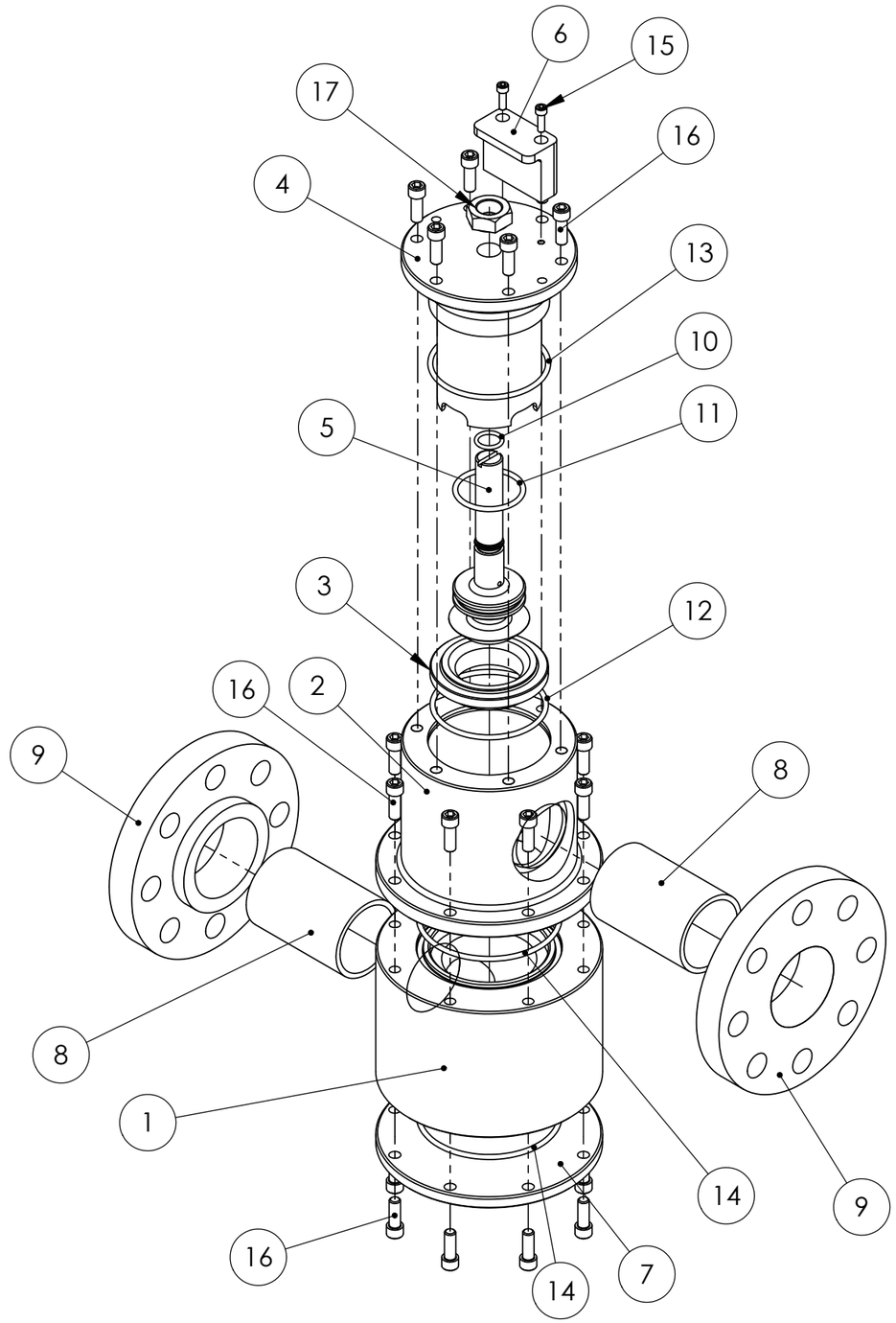

ISOMETRIC VIEW
EXPLODED

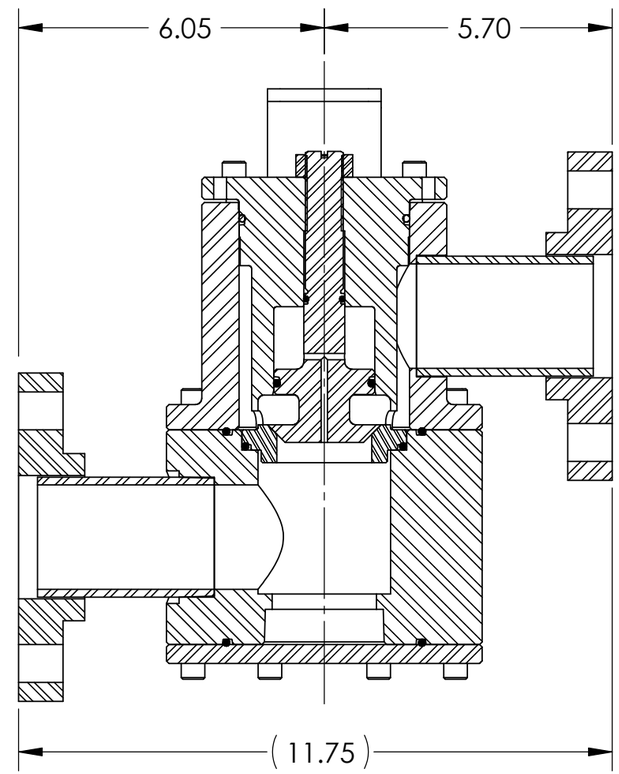

SECTION A-A
SCALE 1 : 3

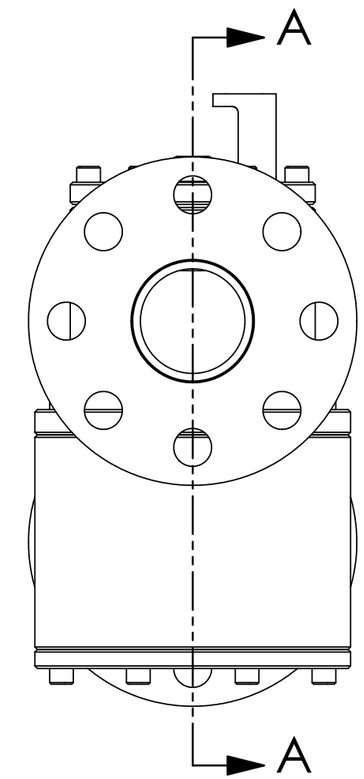

SIDE VIEW
SCALE 1 : 3

Maximum Pressure 520 psig

PRELIMINARY

NOT TO BE USED FOR FABRICATION

CLIENT APPROVAL	
SIGNATURE	DATE

QTY REQ'D	IDENTIFYING No.	NOMENCLATURE OR DESCRIPTION	MATERIAL SPECIFICATION OR APPROVED EQUIVALENT	ZONE	ITEM NO.
-1					

PARTS LIST

UNLESS OTHERWISE SPECIFIED DIMENSIONS ARE IN INCHES TOLERANCES ARE:
X=±.06 XXX=±.005
XX=±.010 ANGLES=±.5°

TREATMENT

FINISH

DO NOT SCALE DRAWING

CONTRACT No. XXXXXXXXXXX-XX

APPROVALS		DATE
DESIGNER	K. Kurtin	20MAY04
DRAWN	K. Kurtin	20MAY04
CHECKED		
ENGR.		
APPROVED		
CAD FILENAME	0391511.17-1-001	

ARES CORPORATION
555 Oppenheimer Drive, Suite 102

TITLE
Surrogate Valve, 520 psi
Assembly

SIZE	CAGE CODE	DRAWING NO.	REV.
B		0391511.17-1-001	O.I.

SCALE 1:4	REL. DATE	CALC. WT. --	ACT. WT. --	SHEET 1 OF 2

CAD GENERATED DRAWING, DO NOT MANUALLY UPDATE

REVISIONS					
ZONE	REV	DESCRIPTION	DATE	ARES APPROVAL	CLIENT APPROVAL

ITEM NO.	PART NUMBER	DESCRIPTION	QTY.
1	0391511.17-1-002	Inlet Section	1
2	0391511.17-1-003	Outlet Section	1
3	0391511.17-1-004	Seat Ring	1
4	0391511.17-1-005	Upper Plug	1
5	0391511.17-1-006	Seat Plug	1
6	0391511.17-1-007	Caliper Block	1
7	0391511.17-1-008	Lower PLug	1
8	-	2.0 inch Sch. 40 Pipe, 3XX Stainless	2
9	-	ANSI 300 2.0 inch FF Flange, 3XX Stainless	2
10	-	O-Ring 2-114, Nitrile	1
11	-	O-Ring 2-224, Nitrile	1
12	-	O-Ring 2-234, Nitrile	1
13	-	O-Ring 2-235, Nitrile	1
14	-	O-Ring 2-240, Nitrile	2
15	-	HX-SHCS 0.19-24x0.625, Stainless	2
16	-	HX-SHCS 0.3125-18x0.875, Stainless	22
17	-	NUT 0.7500-16, Stainless	1

PRELIMINARY

NOT TO BE USED FOR FABRICATION

NOTES:
1. Item 8 length to maintain face-to-face dimensions shown.
2. Attach Item 8 to Item 9 via weld or pipe thread.
3. Attach Item 8 to Item 1 via pipe thread only.
4. Attach Item 8 to Item 2 via weld only.

CLIENT APPROVAL	
SIGNATURE	DATE

QTY REQ'D	-1	IDENTIFYING No.	NOMENCLATURE OR DESCRIPTION	MATERIAL SPECIFICATION OR APPROVED EQUIVALENT	ZONE	ITEM NO.

PARTS LIST

UNLESS OTHERWISE SPECIFIED DIMENSIONS ARE IN INCHES TOLERANCES ARE:
X=±.06 XXX=±.005
XX=±.010 ANGLES=±.5°

TREATMENT

FINISH

DO NOT SCALE DRAWING

CONTRACT No. XXXXXXXXXXX-XX

APPROVALS		DATE
DESIGNER	K. Kurtin	20MAY04
DRAWN	K. Kurtin	20MAY04
CHECKED		
ENGR.		
APPROVED		
CAD FILENAME	0391511.17-1-001	

ARES CORPORATION
555 Oppenheimer Drive, Suite 102

TITLE
Surrogate Valve, 520 psi
Assembly

SIZE	CAGE CODE	DRAWING NO.	REV.
B		0391511.17-1-001	O.I.

SCALE 1:4	REL. DATE	CALC. WT. --	ACT. WT. --	SHEET 2 OF 2

CAD GENERATED DRAWING, DO NOT MANUALLY UPDATE