RAS 9770

DOCKETED
USNRC

2005 MAR -3 PM 3:57

OFFICE OF THE SECRETARY
RULEMAKINGS AND
ADJUDICATIONS STAFF

THE HYDROLOGIC EVALUATION OF LANDFILL PERFORMANCE (HELP) MODEL

USER'S GUIDE FOR VERSION 3

by

Paul R. Schroeder, Cheryl M. Lloyd, and Paul A. Zappi
Environmental Laboratory
U.S. Army Corps of Engineers
Waterways Experiment Station
Vicksburg, Mississippi 39180-6199

and

Nadim M. Aziz
Department of Civil Engineering
Clemson University
Clemson, South Carolina 29634-0911

U.S. NUCLEAR REGULATORY COMMISSION
In the Matter of LOUISIANA ENERGY SERVICES, LP
Docket No. 70-3103-ML Official Exhibit No. LES-10
OFFERED by: Applicant/Licensee Intervenor/NRC Staff/IPC Other
IDENTIFIED on 2/7/05 Witness/Panel G. Rice Tobin
Action Taken: ADMITTED REJECTED WITHDRAWN
Reporter/Clerk

Interagency Agreement No. DW21931425

Project Officer

Robert E. Landreth
Waste Minimization, Destruction and Disposal Research Division
Risk Reduction Engineering Laboratory
Cincinnati, Ohio 45268

RISK REDUCTION ENGINEERING LABORATORY
OFFICE OF RESEARCH AND DEVELOPMENT
U.S. ENVIRONMENTAL PROTECTION AGENCY
CINCINNATI, OHIO 45268

Template = SECY-028

SECY-02

DISCLAIMER

The information in this document has been funded wholly or in part by the United States Environmental Protection Agency under Interagency Agreement No. DW21931425 to the U.S. Army Engineer Waterways Experiment Station. It has been subjected to the Agency's peer and administrative review, and it has been approved for publication as an EPA document. Mention of trade names or commercial products does not constitute endorsement or recommendation for use.

FOREWORD

Today's rapidly developing and changing technologies and industrial products and practices frequently carry with them the increased generation of materials that, if improperly dealt with, can threaten both public health and the environment. Abandoned waste sites and accidental releases of toxic and hazardous substances to the environment also have important environmental and public health implications. The Risk Reduction Engineering Laboratory assists in providing an authoritative and defensible engineering basis for assessing and solving these problems. Its products support the policies, programs and regulations of the Environmental Protection Agency, the permitting and other responsibilities of State and local governments, and the needs of both large and small businesses in handling their wastes responsibly and economically.

This report presents guidance on the use of the Hydrologic Evaluation of Landfill Performance (HELP) computer program. The HELP program is a quasi-two-dimensional hydrologic model for conducting water balance analysis of landfills, cover systems, and other solid waste containment facilities. The model accepts weather, soil and design data, and uses solution techniques that account for the effects of surface storage, snowmelt, runoff, infiltration, evapotranspiration, vegetative growth, soil moisture storage, lateral subsurface drainage, leachate recirculation, unsaturated vertical drainage, and leakage through soil, geomembrane or composite liners. Landfill systems including various combinations of vegetation, cover soils, waste cells, lateral drain layers, low permeability barrier soils, and synthetic geomembrane liners may be modeled. The model facilitates rapid estimation of the amounts of runoff, evapotranspiration, drainage, leachate collection and liner leakage that may be expected to result from the operation of a wide variety of landfill designs. The primary purpose of the model is to assist in the comparison of design alternatives. The model is a tool for both designers and permit writers.

E. Timothy Oppelt, Director
Risk Reduction Engineering Laboratory

ABSTRACT

The Hydrologic Evaluation of Landfill Performance (HELP) computer program is a quasi-two-dimensional hydrologic model of water movement across, into, through and out of landfills. The model accepts weather, soil and design data and uses solution techniques that account for the effects of surface storage, snowmelt, runoff, infiltration, evapotranspiration, vegetative growth, soil moisture storage, lateral subsurface drainage, leachate recirculation, unsaturated vertical drainage, and leakage through soil, geomembrane or composite liners. Landfill systems including various combinations of vegetation, cover soils, waste cells, lateral drain layers, low permeability barrier soils, and synthetic geomembrane liners may be modeled. The program was developed to conduct water balance analysis of landfills, cover systems, and solid waste disposal and containment facilities. As such, the model facilitates rapid estimation of the amounts of runoff, evapotranspiration, drainage, leachate collection, and liner leakage that may be expected to result from the operation of a wide variety of landfill designs. The primary purpose of the model is to assist in the comparison of design alternatives as judged by their water balances. The model, applicable to open, partially closed, and fully closed sites, is a tool for both designers and permit writers.

This report explains how to use Version 3 of the HELP model. Section 1 provides background and overview of the model, and lists software and hardware requirements. Section 2 describes basic landfill design and liquids management concepts. Section 3 presents definitions, options and limitations for input parameters as well as detailed guidance for selecting their input values. Section 4 provides detailed instructions on how to enter input, run the simulation and view or print output. Appendix A provides assistance for estimating material properties for moisture retention and saturated hydraulic conductivity.

The user interface or input facility is written in the Quick Basic environment of Microsoft Basic Professional Development System Version 7.1 and runs under DOS 2.1 or higher on IBM-PC and compatible computers. The HELP program uses an interactive and a user-friendly input facility designed to provide the user with as much assistance as possible in preparing data to run the model. The program provides weather and soil data file management, default data sources, interactive layer editing, on-line help, and data verification and accepts weather data from the most commonly used sources with several different formats.

HELP Version 3 represents a significant advancement over the input techniques of Version 2. Users of the HELP model should find HELP Version 3 easy to use and should be able to use it for many purposes, such as preparing and editing landfill profiles and weather data. Version 3 facilitates use of metric units, international applications, and designs with geosynthetic materials.

This report should be cited as follows:

> Schroeder, P. R., Aziz, N. M., Lloyd, C. M. and Zappi, P. A. (1994). "The Hydrologic Evaluation of Landfill Performance (HELP) Model: User's Guide for Version 3," EPA/600/R-94/168a, September 1994, U.S. Environmental Protection Agency Office of Research and Development, Washington, DC.

This report was submitted in partial fulfillment of Interagency Agreement Number DW21931425 between the U.S. Environmental Protection Agency and the U.S. Army Engineer Waterways Experiment Station, Vicksburg, MS. This report covers a period from November 1988 to June 1994 and work was completed as of June 1994.

CONTENTS

	Page
DISCLAIMER	ii
FOREWORD	iii
ABSTRACT	iv
FIGURES	viii
TABLES	ix
ACKNOWLEDGMENTS	x
1. INTRODUCTION	1
1.1 Background	1
1.2 Overview	3
1.3 System and Operating Documentation	3
1.3.1 Computer Equipment	3
1.3.2 Required Hardware	3
1.3.3 Software Requirements	4
2. BASIC LANDFILL DESIGN CONCEPTS	5
2.1 Background	5
2.2 Leachate Production	5
2.3 Design for Leachate Control	6
3. PROGRAM DEFINITIONS, OPTIONS AND LIMITATIONS	9
3.1 Introduction	9
3.2 Weather Data Requirements	9
3.2.1 Evapotranspiration Data	9
3.2.2 Precipitation Data	14
3.2.3 Temperature Data	19
3.2.4 Solar Radiation Data	22
3.3 Soil and Design Data Requirements	24
3.3.1 Landfill General Information	24
3.3.2 Layer Data	25
3.3.3 Lateral Drainage Layer Design Data	25
3.3.4 Geomembrane Liner Data	26
3.3.5 Runoff Curve Number Information	26

CONTENTS (continued)

		Page
3.4	Landfill Profile and Layer Descriptions	26
3.5	Soil Characteristics	29
3.6	Geomembrane Characteristics	33
3.7	Site Characteristics	35
3.8	Overview of Modeling Procedure	36
3.9	Assumptions and Limitations	37
3.9.1	Solution Methods	37
3.9.2	Limits of Application	39
4.	PROGRAM INPUT	42
4.1	Introduction	42
4.2	Definitions and Rules	42
4.3	Program Structure	45
4.4	Main Menu	45
4.5	Weather Data	47
4.5.1	Weather Data File Selection	47
4.5.2	Evapotranspiration (ET) Data	49
4.5.3	Precipitation, Temperature and Solar Radiation Data	51
4.5.4	Saving Weather Data	60
4.6	Soil and Design Data	62
4.6.1	Soil and Design Data File Selection	62
4.6.2	Landfill General Information	64
4.6.3	Landfill Layer Design	65
4.6.4	Runoff Curve Number	73
4.6.5	Verifying and Saving Soil and Design Data	75
4.7	Executing the Simulation	77
4.8	Viewing Results	79
4.9	Printing Results	79
4.10	Displaying Guidance	81
4.11	Quitting HELP	81
REFERENCES		82
BIBLIOGRAPHY		84
APPENDIX A:	Calculating Soil, Waste and Material Properties	A1

FIGURES

No.		Page
1	Schematic of Landfill Profile Illustrating Typical Landfill Features	7
2	Relation between SCS Curve Number and Default Soil Texture Number for Various Levels of Vegetation	36
3	HELP3 Main Menu	46
4	Schematic of Weather Data Module	47
5	Schematic of "Weather Data - File Editing" Screen	48
6	Schematic of "Evapotranspiration Data" Screen	50
7	Schematic of "Precipitation, Temperature and Solar Radiation" Screen	52
8	Precipitation Options	52
9	Temperature Options	53
10	Solar Radiation Options	54
11	"Weather Data - File Saving" Screen Options	61
12	Schematic of Soil and Design Data Module	62
13	"Soil and Design Data - File Editing" Screen Options	63
14	Schematic of "Landfill General Information" Screen	64
15	Schematic of Landfill Layer Data	66
16	Schematic of "Runoff Curve Number Information" Screen Options	73
17	Verify and Save Soil and Design Data Options	75
18	Schematic of "Execute Simulation" Option	78
19	Schematic of "View Results" Option	80
20	Schematic of "Print Results" Option	80

TABLES

No.		Page
1	Cities For Evapotranspiration Data and Synthetic Temperature and Solar Radiation Data	11
2	Cities For Default Historical Precipitation Data	15
3	Cities For Synthetic Precipitation Data	17
4	Default Soil, Waste, and Geosynthetic Characteristics	30

ACKNOWLEDGMENTS

The support of the project by the Waste Minimization, Destruction and Disposal Research Division, Risk Reduction Engineering Laboratory, U.S. Environmental Protection Agency, Cincinnati, OH and the Headquarters, U.S. Army Corps of Engineers, Washington, DC, through Interagency Agreement No. DW21931425 is appreciated. In particular, the authors wish to thank the U.S. EPA Project Officer, Mr. Robert Landreth, for his long standing support.

The draft version of this document was prepared at Clemson University by Dr. Nadim M. Aziz, the author of the HELP Version 3 user interface, under contract with the USEPA Risk Reduction Engineering Laboratory and the USAE Waterways Experiment Station. The final version of this document was prepared at the USAE Waterways Experiment Station by Dr. Paul R. Schroeder and Ms. Cheryl M. Lloyd. Appendix A was written by Mr. Paul A. Zappi. The figures used in the report were prepared by Messrs. Jimmy Farrell and Christopher Chao.

The report and user interface were reviewed by Messrs. Elba A. Dardeau, Jr., and Daniel E. Averett. This report has not been subjected to the EPA review and, therefore, the contents do not necessarily reflect the views of the Agency, and no official endorsement should be inferred.

SECTION 1

INTRODUCTION

The Hydrologic Evaluation of Landfill Performance (HELP) computer program is a quasi-two-dimensional hydrologic model of water movement across, into, through and out of landfills. The model accepts weather, soil and design data, and uses solution techniques that account for the effects of surface storage, snowmelt, runoff, infiltration, evapotranspiration, vegetative growth, soil moisture storage, lateral subsurface drainage, leachate recirculation, unsaturated vertical drainage, and leakage through soil, geomembrane or composite liners. Landfill systems including various combinations of vegetation, cover soils, waste cells, lateral drain layers, low permeability barrier soils, and synthetic geomembrane liners may be modeled. The program was developed to conduct water balance analysis of landfills, cover systems and solid waste disposal and containment facilities. As such, the model facilitates rapid estimation of the amounts of runoff, evapotranspiration, drainage, leachate collection and liner leakage that may be expected to result from the operation of a wide variety of landfill designs. The primary purpose of the model is to assist in the comparison of design alternatives as judged by their water balances. The model, applicable to open, partially closed, and fully closed sites, is a tool for both designers and permit writers.

1.1 BACKGROUND

The HELP program, Versions 1, 2 and 3, was developed by the U.S. Army Engineer Waterways Experiment Station (WES), Vicksburg, MS, for the U.S. Environmental Protection Agency (EPA), Risk Reduction Engineering Laboratory, Cincinnati, OH, in response to needs in the Resource Conservation and Recovery Act (RCRA) and the Comprehensive Environmental Response, Compensation and Liability Act (CERCLA, better known as Superfund) as identified by the EPA Office of Solid Waste, Washington, DC.

HELP Version 1 (Schroeder et al., 1984) represented a major advance beyond the Hydrologic Simulation on Solid Waste Disposal Sites (HSSWDS) program (Perrier and Gibson, 1980; Schroeder and Gibson, 1982), which was also developed at WES. The HSSWDS model simulated only the cover system, did not model lateral flow through drainage layers, and handled vertical drainage only in a rudimentary manner. The infiltration, percolation and evapotranspiration routines were almost identical to those used in the Chemicals, Runoff, and Erosion from Agricultural Management Systems (CREAMS) model, which was developed by Knisel (1980) for the U.S. Department of Agriculture (USDA). The runoff and infiltration routines relied heavily on the Hydrology Section of the National Engineering Handbook (USDA, Soil Conservation Service, 1985). Version 1 of the HELP model incorporated a lateral subsurface drainage model and improved unsaturated drainage and liner leakage models into the HSSWDS model. In

addition, the HELP model provided simulation of the entire landfill including leachate collection and liner systems.

Version 2 (Schroeder et al., 1988) represented a great enhancement of the capabilities of the HELP model. The WGEN synthetic weather generator developed by the USDA Agricultural Research Service (ARS) (Richardson and Wright, 1984) was added to the model to yield daily values of precipitation, temperature and solar radiation. This replaced the use of normal mean monthly temperature and solar radiation values and improved the modeling of snow and evapotranspiration. Also, a vegetative growth model from the Simulator for Water Resources in Rural Basins (SWRRB) model developed by the ARS (Arnold et al., 1989) was merged into the HELP model to calculate daily leaf area indices. Modeling of unsaturated hydraulic conductivity and flow and lateral drainage computations were improved. Accuracy was increased with the use of double precision. Default soil data were improved, and the model permitted use of more layers and initialization of soil moisture content. Input and editing were simplified. Output was clarified, and standard deviations were reported.

In Version 3, the HELP model has been greatly enhanced beyond Version 2. The number of layers that can be modeled has been increased. The default soil/material texture list has been expanded to contain additional waste materials, geomembranes, geosynthetic drainage nets and compacted soils. The model also permits the use of a user-built library of soil textures. Computation of leachate recirculation between soil layers and groundwater drainage into the landfill have been added. Moreover, HELP Version 3 accounts for leakage through geomembranes due to manufacturing defects (pinholes) and installation defects (punctures, tears and seaming flaws) and by vapor diffusion through the liner. The estimation of runoff from the surface of the landfill has been improved to account for large landfill surface slopes and slope lengths. The snowmelt model has been replaced with an energy-based model; the Priestly-Taylor potential evapotranspiration model has been replaced with a Penman method, incorporating wind and humidity effects as well as long wave radiation losses (heat loss at night). A frozen soil model has been added to improve infiltration and runoff predictions in cold regions. The unsaturated vertical drainage model has also been improved to aid in storage computations. Input and editing have been further simplified with interactive, full-screen, menu-driven input techniques.

In addition, the HELP Version 3 model provides a variety of methods for specifying precipitation, temperature and solar radiation data. Now, data from the most commonly available government and commercial sources can be imported easily. Moreover, data used in HELP Version 2 can still be used with minimum user effort. Specifying weather data manually and editing previously entered weather data can be easily done by using built-in spreadsheet facilities.

The use of data files in Version 3 is much simpler and more convenient than HELP Version 2 because data are saved permanently in user defined file names at a user-specified location. Similarly, the user has more flexibility to define units for every type

of data needed to run the HELP model. Finally, Version 3 of the HELP model provides on-line help at every step of the data preparation process.

Although applicable to most landfill applications, the HELP model was developed specifically to perform hazardous and municipal waste disposal landfill evaluations as required by RCRA. Hazardous waste disposal landfills generally should have a liner to prevent migration of waste from the landfill, a final cover to minimize the production of leachate following closure, careful controls of runon and runoff, and limits on the buildup of leachate head over the liner to no more than 1 ft. The HELP model is useful for predicting the amounts of runoff, drainage, and leachate expected for reasonable designs as well as the buildup of leachate above the liner. However, the model should not be expected to produce credible results from input unrepresentative of landfills.

1.2 OVERVIEW

The principal purpose of this User's Guide is to provide the basic information needed to use the computer program. Thus, while some attention must be given to definitions, descriptions of variables and interpretation of results, only a minimal amount of such information is provided. Detailed documentation providing in-depth coverage of the theory and assumptions on which the model is based and the internal logic of the program is also available (Schroeder et al., 1994). Potential HELP users are strongly encouraged to study the documentation and this User's Guide before attempting to use the program to evaluate a landfill design. Additional documentation concerning the sensitivity of program inputs, application of the model and verification of model predictions are under development.

1.3 SYSTEM AND OPERATING DOCUMENTATION

1.3.1 Computer Equipment

The model entitled "The Hydrologic Evaluation of Landfill Performance" (HELP) was written to run on IBM-compatible personal computers (PC) under the DOS environment.

1.3.2 Required Hardware

The following IBM-compatible CPU (8088, 80286, 80386 or 80486) hardware is required:

1. Monitor, preferably color EGA or better

2. Floppy disk drive (5.25-inch double-sided, double- or high-density; or 3.5-inch

double-sided, double- or high-density)

3. Hard disk drive or a second floppy disk drive

4. 400k bytes or more of available RAM memory

5. 8087, 80287, 80387 or 80486 math co-processor

6. Printer, if a hard copy is desired

1.3.3 Software Requirements

The user must use Microsoft or compatible Disk Operating Systems (MS-DOS) Version 2.10 or a higher version. The user interface executable module was compiled and linked with Microsoft Basic Professional Development System 7.1. Other executable components were compiled with the Ryan-McFarland FORTRAN Version 2.42. The Microsoft Basic Professional Development System and Ryan-McFarland FORTRAN compiler are not needed to run the HELP Model.

SECTION 2

BASIC LANDFILL DESIGN CONCEPTS

2.1 BACKGROUND

Over the past 20 to 30 years, the sanitary landfill has come to be widely recognized as an economic and effective means for disposal of municipal and industrial solid wastes. Today, modern methods of landfill construction and management are sufficiently developed to ensure that even large volumes of such materials can be handled and disposed of in such a way as to protect public health and minimize adverse effects on the environment.

Recently, public attention has been focused on a special class of materials commonly referred to as hazardous wastes. The chemical and physical diversity, environmental persistence, and acute and chronic detrimental effects on human, plant and animal health of many of these substances are such that great care must be exercised in their disposal. Hazardous wastes are produced in such large quantities and are so diverse that universally acceptable disposal methods have yet to be devised. However, for the present, disposal or storage in secure landfills is usually a prudent approach. The current state of the art is an extension of sanitary landfill technology using very conservative design criteria. Some important basic principles and concepts of landfill design are summarized below. Specific emphasis is given to disposal of hazardous materials, but the discussion is also applicable to ordinary sanitary landfills.

2.2 LEACHATE PRODUCTION

Storage of any waste material in a landfill poses several potential problems. One problem is the possible contamination of soil, groundwater and surface water that may occur as leachate produced by water or liquid wastes moving into, through and out of the landfill migrates into adjacent areas. This problem is especially important when hazardous wastes are involved because many of these substances are quite resistant to biological or chemical degradation and, thus, are expected to persist in their original form for many years, perhaps even for centuries. Given this possibility hazardous waste landfills should be designed to prevent any waste or leachate from ever moving into adjacent areas. This objective is beyond the capability of current technology but does represent a goal in the design and operation of today's landfills. The HELP model has been developed specifically as a tool to be used by designers and regulatory reviewers for selecting practical designs that minimize potential contamination problems.

In the context of a landfill, leachate is described as liquid that has percolated through the layers of waste material. Thus, leachate may be composed of liquids that originate from a number of sources, including precipitation, groundwater, consolidation, initial

moisture storage, and reactions associated with decomposition of waste materials. The chemical quality of leachate varies as a function of a number of factors, including the quantity produced, the original nature of the buried waste materials, and the various chemical and biochemical reactions that may occur as the waste materials decompose. In the absence of evidence to the contrary, most regulatory agencies prefer to assume that any leachate produced will contaminate either ground or surface waters; in the light of the potential water quality impact of leachate contamination, this assumption appears reasonable.

The quantity of leachate produced is affected to some extent by decomposition reactions and initial moisture content; however, it is largely governed by the amount of external water entering the landfill. Thus, a key first step in controlling leachate migration is to limit production by preventing, to the extent feasible, the entry of external water into the waste layers. A second step is to collect any leachate that is produced for subsequent treatment and disposal. Techniques are currently available to limit the amount of leachate that migrates into adjoining areas to a virtually immeasurable volume, as long as the integrity of the landfill structure and leachate control system is maintained.

2.3 DESIGN FOR LEACHATE CONTROL

A schematic profile view of a somewhat typical hazardous waste landfill is shown in Figure 1. The bottom layer of soil may be naturally existing material or it may be hauled in, placed and compacted to specifications following excavation to a suitable subgrade. In either case, the base of the landfill should act as a liner with some minimum thickness and a very low hydraulic conductivity (or permeability). Treatments may be used on the barrier soil to reduce its permeability to an acceptable level. As an added factor of safety, an impermeable synthetic membrane may be placed on the top of the barrier soil layer to form a composite liner.

Immediately above the bottom composite liner is a leakage detection drainage layer to collect leakage from the primary liner, in this case, a geomembrane. Above the primary liner are a geosynthetic drainage net and a sand layer that serve as drainage layers for leachate collection. The drain layers composed of sand are typically at least 1-ft thick and have suitably spaced perforated or open joint drain pipe embedded below the surface of the liner. The leachate collection drainage layer serves to collect any leachate that may percolate through the waste layers. In this case where the liner is solely a geomembrane, a drainage net may be used to rapidly drain leachate from the liner, avoiding a significant buildup of head and limiting leakage. The liners are sloped to prevent ponding by encouraging leachate to flow toward the drains. The net effect is that very little leachate should percolate through the primary liner and virtually no migration of leachate through the bottom composite liner to the natural formations below. Taken as a whole, the drainage layers, geomembrane liners, and barrier soil liners may be referred to as the leachate collection and removal system (drain/liner system) and more specifically a double liner system.

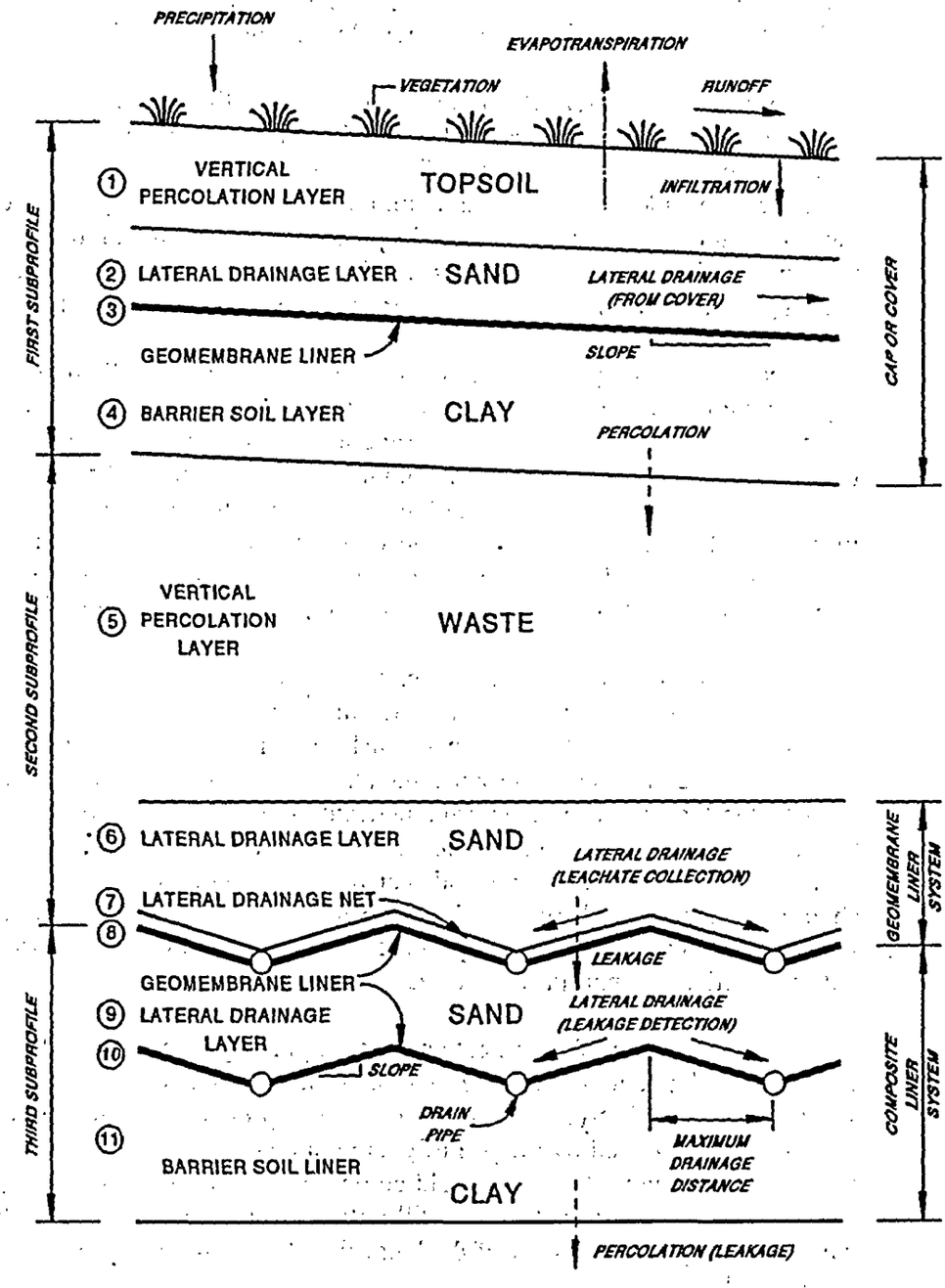

Figure 1. Schematic of Landfill Profile Illustrating Typical Landfill Features

After the landfill is closed, the leachate collection and removal system serves basically in a back-up capacity. However, while the landfill is open and waste is being added, these components constitute the principal defense against contamination of adjacent areas. Thus, care must be given to their design and construction.

Day-to-day operation of a modern sanitary landfill calls for wastes to be placed in relatively thin lifts, compacted, and covered with soil each day. Thus, wastes should not remain exposed for more than a few hours. Although the daily soil cover serves effectively to hide the wastes and limit the access of nuisance insects and potential disease vectors, it is of limited value for preventing the formation of leachate. Thus, even though a similar procedure can be used for hazardous wastes, the drainage/liner system must function well throughout and after the active life of the landfill.

When the capacity of the landfill is reached, the waste cells may be covered with a cap or final cover, typically composed of four distinct layers as shown in Figure 1. At the base of the cap is a drainage layer and a liner system layer similar to that used at the base of the landfill. Again, a geomembrane liner would normally be used in conjunction with the barrier soil liner for hazardous waste landfill but has been used less frequently in municipal waste landfills. The top of the barrier soil layer is graded so that water percolating into the drainage layer will tend to move horizontally toward some removal system (drain) located at the edge of the landfill or subunit thereof.

A layer of soil suitable for vegetative growth is placed at the top of final cover system to complete the landfill. A 2-ft-thick layer of soil having a loamy, silty nature serves this purpose well. The upper surface is graded so that runon is restricted and infiltration is controlled to provide moisture for vegetation while limiting percolation through the topsoil. Runoff is promoted but controlled to prevent excessive erosion of the cap. The vegetation used should be selected for ease of establishment in a given area, promotion of evapotranspiration and year-round protection from erosion. The root system should not penetrate, disrupt or desiccate the upper liner system (Layers # 3 and # 4). Grasses are usually best for this purpose; however, local experts should be consulted to aid in selection of appropriate species.

The combination of site selection, surface grading, transpiration from vegetation, soil evaporation, drainage through the sand, and the low hydraulic conductivity of the barrier soil liner serves effectively to minimize leachate production from external water. Added effectiveness is gained by the use of geomembrane liners in the cap in conjunction with the barrier soil liner. The cap should be no more permeable than the leachate collection and removal system so that the landfill will not gradually fill and overflow into adjacent areas following abandonment of the landfill. This phenomenon is sometimes referred to as the "bathtub" effect.

SECTION 3

PROGRAM DEFINITIONS, OPTIONS AND LIMITATIONS

3.1 INTRODUCTION

The HELP program was developed to provide landfill designers and regulators with a tool for rapid, economical screening of alternative designs. The program may be used to estimate the magnitudes of various components of the water budget, including the volume of leachate produced and the thickness of water-saturated soil (head) above liners. The results may be used to compare the leachate production potential of alternative designs, to select and size appropriate drainage and collection systems, and to size leachate treatment facilities.

The program uses weather (climatic), soil and design data to generate daily estimates of water movement across, into, through and out of landfills. To accomplish this objective and compute a water balance, daily precipitation is partitioned into surface storage (snow), snowmelt, interception, runoff, infiltration, surface evaporation, evapotranspiration from soil, subsurface moisture storage, liner leakage (percolation), and subsurface lateral drainage to collection, removal and recirculation systems.

This section discusses data requirements, nomenclature, important assumptions and limitations, and other fundamental information needed to run the program. The program documentation report (Schroeder et al., 1994) contains detailed explanations of the solution techniques employed and the computer programs.

The HELP program requires three general types of input data: weather data, soil data and design data. A summary of input options and data requirements is presented in this section. Section 4 provides step-by-step input instructions.

3.2 WEATHER DATA REQUIREMENTS

The weather data required in the HELP model are classified into four groups: evapotranspiration, precipitation, temperature, and solar radiation data. The HELP user may enter weather data using several options depending on the type of weather data being considered. The requirements for each weather data type are listed below. The units used are also listed next to each data type and/or variable. Customary units are based on the US Customary units, and Metric implies SI units.

3.2.1 Evapotranspiration Data

The evapotranspiration data can be entered in one of two ways:

1. *Default Evapotranspiration Option with Location Specific Guidance (Customary and Metric Units).* This option uses the data provided by the HELP model for selected U.S. cities. The cities are listed in Table 1. The data needed for this option are:

- **Location**

- **Evaporative zone depth** (Guidance is available for the selected location based on a thick layer of loamy soil with a grassy form of vegetation. Clayey soils would generally have larger evaporative zone depths since it exerts greater capillary suction; analogously, sandy soils would have smaller evaporative depths. Shrubs and trees with tap roots would have larger evaporative zone depths than the values given in the guidance.) The user must specify an evaporative zone depth and can use the guidance along with specific design information to select a value. The program does not permit the evaporative depth to exceed the depth to the top of the topmost liner. Similarly, the evaporative zone depth would not be expected to extend very far into a sand drainage layer. The evaporative zone depth must be greater than zero. The evaporative zone depth is the maximum depth from which water may be removed by evapotranspiration. The value specified influences the storage of water near the surface and therefore directly affects the computations for evapotranspiration and runoff. Where surface vegetation is present, the evaporative depth should at least equal the expected average depth of root penetration. The influence of plant roots usually extends somewhat below the depth of root penetration because of capillary suction to the roots. The depth specified should be characteristic of the maximum depth to which the moisture changes near the surface due to drying over the course of a year, typically occurring during peak evaporative demand or when peak quantity of vegetation is present. Setting the evaporative depth equal to the expected average root depth would tend to yield a low estimate of evapotranspiration and a high estimate of drainage through the evaporative zone. An evaporative depth should be specified for bare ground to account for direct evaporation from the soil; this depth would be a function of the soil type and vapor and heat flux at the surface. The depth of capillary draw to the surface without vegetation or to the root zone may be only several inches in gravels; in sands the depth may be about 4 to 8 inches, in silts about 8 to 18 inches, and in clays about 12 to 60 inches.

- **Maximum leaf area index** (Guidance is available for the selected location). The user must enter a maximum value of leaf area index for the vegetative cover. Leaf area index (LAI) is defined as the dimensionless ratio of the leaf area of actively transpiring vegetation to the nominal surface area of the land on which the vegetation is growing. The program provides the user with a maximum LAI value typical of the location selected if the value entered by the user cannot be supported without irrigation because of low rainfall or a short growing season. This statement should be considered only as a warning. The maximum LAI for bare ground is zero. For a poor stand of grass the LAI could approach 1.0; for a fair stand of grass, 2.0; for a good stand of grass, 3.5; and for an excellent

TABLE 1. CITIES FOR EVAPOTRANSPIRATION DATA AND SYNTHETIC TEMPERATURE AND SOLAR RADIATION DATA

ALABAMA
- Birmingham
- Mobile
- Montgomery

ALASKA
- Annette
- Bethel
- Fairbanks

ARIZONA
- Flagstaff
- Phoenix
- Tucson
- Yuma

ARKANSAS
- Fort Smith
- Little Rock

CALIFORNIA
- Bakersfield
- Blue Canyon
- Eureka
- Fresno
- Los Angeles
- Mt. Shasta
- Sacramento
- San Diego
- San Francisco
- Santa Maria

COLORADO
- Colorado Springs
- Denver
- Grand Junction
- Pueblo

CONNECTICUT
- Bridgeport
- Hartford
- New Haven
- Windsor Locks

DELAWARE
- Wilmington

DISTRICT OF COLUMBIA
- Washington

FLORIDA
- Jacksonville
- Miami
- Orlando
- Tallahassee
- Tampa
- West Palm Beach

GEORGIA
- Atlanta
- Augusta
- Macon
- Savannah
- Watkinsville

HAWAII
- Honolulu

IDAHO
- Boise
- Pocatello

ILLINOIS
- Chicago
- East St. Louis

INDIANA
- Evansville
- Fort Wayne
- Indianapolis

IOWA
- Des Moines
- Dubuque

KANSAS
- Dodge City
- Topeka
- Wichita

KENTUCKY
- Covington
- Lexington
- Louisville

LOUISIANA
- Baton Rouge
- Lake Charles
- New Orleans
- Shreveport

MAINE
- Augusta
- Bangor
- Caribou
- Portland

MARYLAND
- Baltimore

MASSACHUSETTS
- Boston
- Nantucket
- Plainfield
- Worchester

MICHIGAN
- Detroit
- East Lansing
- Grand Rapids
- Sault Sainte Marie

MINNESOTA
- Duluth
- Minneapolis
- St. Cloud

MISSISSIPPI
- Jackson
- Meridian

MISSOURI
- Columbia
- Kansas City
- St. Louis

MONTANA
- Billings
- Glasgow
- Great Falls
- Havre
- Helena
- Kalispell
- Miles City

NEBRASKA
- Grand Island
- North Platte
- Omaha
- Scottsbluff

NEVADA
- Elko
- Ely
- Las Vegas
- Reno
- Winnemucca

NEW HAMPSHIRE
- Concord
- Mt. Washington
- Nashua

NEW JERSEY
- Edison
- Newark
- Seabrook

NEW MEXICO
- Albuquerque
- Roswell

NEW YORK
- Albany
- Buffalo
- Central Park
- Ithaca
- New York
- Syracuse

NORTH CAROLINA
- Asheville
- Charlotte
- Greensboro
- Raleigh

NORTH DAKOTA
- Bismarck
- Williston

OHIO
- Cincinnati
- Cleveland
- Columbus
- Put-in-Bay
- Toledo

OKLAHOMA
- Olkahoma City
- Tulsa

OREGON
- Astoria
- Burns
- Meacham
- Medford
- Pendleton
- Portland
- Salem
- Sexton Summit

PENNSYLVANIA
- Philadelphia
- Pittsburgh

RHODE ISLAND
- Providence

SOUTH CAROLINA
- Charleston
- Columbia

SOUTH DAKOTA
- Huron
- Rapid City

TENNESSEE
- Chattanooga
- Knoxville
- Memphis
- Nashville

(Continued)

TABLE 1 (continued). CITIES FOR EVAPOTRANSPIRATION DATA AND SYNTHETIC TEMPERATURE AND SOLAR RADIATION DATA

TEXAS	UTAH	WASHINGTON	WISCONSIN
Abilene	Cedar City	Olympia	Green Bay
Amarillo	Milford	Pullman	Lacrosse
Austin	Salt Lake City	Seattle	Madison
Brownsville	VERMONT	Spokane	Milwaukee
Corpus Christi	Burlington	Stampede Pass	WYOMING
Dallas	Montpelier	Walla Walla	Cheyenne
El Paso	Rutland	Yakima	Lander
Galveston	VIRGINIA	WEST VIRGINIA	PUERTO RICO
Houston	Lynchburg	Charleston	San Juan
Midland	Norfolk		
San Antonio	Richmond		
Temple			
Waco			

(Concluded)

stand of grass, 5.0. The LAI for dense stands of trees and shrubbery would also approach 5. The program is largely insensitive to values above 5. If the vegetative species limit plant transpiration (such as succulent plants), the maximum LAI value should be reduced to a value equivalent of the LAI for a stand of grass that would yield a similar quantity of plant transpiration. Most landfills would tend to have at best a fair stand of grass and often only a poor stand of grass because landfills are not designed as ideal support systems for vegetative growth. Surface soils are commonly shallow and provide little moisture storage for dry periods. Many covers may have drains to remove infiltrated water quickly, reducing moisture storage. Some covers have liners near the surface restricting root penetration and causing frequent saturation of the surface soil which limits oxygen availability to the roots. Some landfills produce large quantities of gas which, if uncontrolled, reduces the oxygen availability in the rooting zone and therefore limits plant growth.

The program produces values for the Julian dates starting and ending the growing season, the annual average wind speed, and the quarterly average relative humidity for the location. The values for the growing season should be checked carefully to agree with the germination and harvesting (end of seasonal growth) dates for your type of vegetation. For example, grasses in southern California would germinate in the fall when the rains occur and die off in late spring when the soil moisture is depleted. This contrasts with a typical growing season, which would start in the spring and end in the fall.

2. ***Manual Option (Customary and Metric Units).*** The data needed for this option are:

- **Location**

- **Evaporative zone depth.** The user must specify an evaporative zone depth and can use the guidance given under the default option along with specific design information to select a value. The program does not permit the evaporative depth to exceed the depth to the top of the topmost barrier soil layer. Similarly, the evaporative zone depth would not be expected to extend very far into a sand drainage layer. The evaporative zone depth must be greater than zero. The evaporative zone depth is the maximum depth from which water may be removed by evapotranspiration. The value specified influences the storage of water near the surface and, therefore, directly affects the computations for evapotranspiration and runoff. Where surface vegetation is present, the evaporative depth should at least equal the expected average depth of root penetration. The influence of plant roots usually extends somewhat below the depth of root penetration because of capillary suction to the roots. The depth specified should be characteristic of the maximum depth to which the moisture changes near the surface due to drying over the course of a year, typically occurring during peak evaporative demand or when peak quantity of vegetation is present. Setting the evaporative depth equal to the expected average root depth would tend to yield a low estimate of evapotranspiration and a high estimate of drainage through the evaporative zone. An evaporative depth should be specified for bare ground to account for direct evaporation from the soil; this depth would be a function of the soil type and vapor and heat flux at the surface. The depth of capillary draw to the surface without vegetation or to the root zone may be only several inches in gravels; in sands the depth may be about 4 to 8 inches, in silts about 8 to 18 inches, and in clays about 12 to 60 inches. Rooting depth is dependent on many factors -- species, moisture availability, maturation, soil type and plant density. In humid areas where moisture is readily available near the surface, grasses may have rooting depth of 6 to 24 inches. In drier areas, the rooting depth is very sensitive to plant species and to the depth to which moisture is stored and may range from 6 to 48 inches. The evaporative zone depth would be somewhat greater than the rooting depth. The local Agricultural Extension Service office can provide information on characteristic rooting depths for vegetation in specific areas.

- **Maximum leaf area index.** The user must enter a maximum value of leaf area index (LAI) for the vegetative cover. LAI is defined as the dimensionless ratio of the leaf area of actively transpiring vegetation to the nominal surface area of the land on which the vegetation is growing. The program provides the user with a maximum LAI value typical of the location selected if the value entered by the user cannot be supported without irrigation because of low rainfall or a short growing season. This statement should be considered only as a warning. The maximum LAI for bare ground is zero. For a poor stand of grass the LAI could approach 1.0; for a fair stand of grass, 2.0; for a good stand of grass, 3.5; and for an excellent stand of grass, 5.0. The LAI for dense stands of trees and shrubbery would also approach 5. The program is largely insensitive to values above 5. If

the vegetative species limit plant transpiration (such as succulent plants), the maximum LAI value should be reduced to a value equivalent of the LAI for a stand of grass that would yield a similar quantity of plant transpiration. Most landfills would tend to have, at best, a fair stand of grass and often only a poor stand of grass because landfills are not designed as ideal support systems for vegetative growth. Surface soils are commonly shallow and provide little moisture storage for dry periods. Many covers may have drains to remove infiltrated water quickly, reducing moisture storage. Some covers have liners near the surface restricting root penetration and causing frequent saturation of the surface soil which limits oxygen availability to the roots. Some landfills produce large quantities of gas which, if uncontrolled, reduces the oxygen availability in the rooting zone and therefore limits plant growth.

- **Dates starting and ending the growing season.** The start of the growing season is based on mean daily temperature and plant species. Typically, the start of the growing season for grasses is the Julian date (day of the year) when the normal mean daily temperature rises above 50 to 55 degrees Fahrenheit. The growing season ends when the normal mean daily temperatures falls below 50 to 55 degrees Fahrenheit. In cooler climates the start and end would be at lower temperatures and in warmer climates at higher temperatures. Data on normal mean daily temperature is available from "Climates of the States" (Ruffner, 1985) and the "Climatic Atlas of the United States" (NOAA, 1974). In locations where the growing season extends year-round, the start of the growing season should be reported as day 0 and the end as day 367. The values for the growing season should be checked carefully to agree with the germination and harvesting (end of seasonal growth) dates for your type of vegetation. For example, grasses in southern California would germinate in the fall when the rains occur and die in late spring when the soil moisture is depleted. This contrasts with a typical growing season which would start in the spring and end in the fall.

- **Normal average annual wind speed.** This data is available from NOAA annual climatological data summary, "Climates of the States" (Ruffner, 1985) and the "Climatic Atlas of the United States" (NOAA, 1974).

- **Normal average quarterly relative humidity.** This data is available from NOAA annual climatological data summary, "Climates of the States" (Ruffner, 1985) and the "Climatic Atlas of the United States" (NOAA, 1974).

3.2.2 Precipitation Data

1. ***Default Precipitation Option (Customary Units).*** The user may select 5 years of historical precipitation data for any of the 102 U.S. cities listed in Table 2. The input needed for this option is:

TABLE 2. CITIES FOR DEFAULT HISTORICAL PRECIPITATION DATA

ALASKA
- Annette
- Bethel
- Fairbanks

ARIZONA
- Flagstaff
- Phoenix
- Tucson

ARKANSAS
- Little Rock

CALIFORNIA
- Fresno
- Los Angeles
- Sacramento
- San Diego
- Santa Maria

COLORADO
- Denver
- Grand Junction

CONNECTICUT
- Bridgeport
- Hartford
- New Haven

FLORIDA
- Jacksonville
- Miami
- Orlando
- Tallahassee
- Tampa
- West Palm Beach

GEORGIA
- Atlanta
- Watkinsville

HAWAII
- Honolulu

IDAHO
- Boise
- Pocatello

ILLINOIS
- Chicago
- East St. Louis

INDIANA
- Indianapolis

IOWA
- Des Moines

KANSAS
- Dodge City
- Topeka

KENTUCKY
- Lexington

LOUISIANA
- Lake Charles
- New Orleans
- Shreveport

MAINE
- Augusta
- Bangor
- Caribou
- Portland

MASSACHUSETTS
- Boston
- Plainfield
- Worcester

MICHIGAN
- East Lansing
- Sault Sainte Marie

MINNESOTA
- St. Cloud

MISSOURI
- Columbia

MONTANA
- Glasgow
- Great Falls

NEBRASKA
- Grand Island
- North Omaha

NEVADA
- Ely
- Las Vegas

NEW HAMPSHIRE
- Concord
- Nashua

NEW JERSEY
- Edison
- Seabrook

NEW MEXICO
- Albuquerque

NEW YORK
- Albany
- Central Park
- Ithaca
- New York
- Syracuse

NORTH CAROLINA
- Greensboro

NORTH DAKOTA
- Bismarck

OHIO
- Cincinnati
- Cleveland
- Columbus
- Put-in-Bay

OKLAHOMA
- Oklahoma City
- Tulsa

OREGON
- Astoria
- Medford
- Portland

PENNSYLVANIA
- Philadelphia
- Pittsburgh

RHODE ISLAND
- Providence

SOUTH CAROLINA
- Charleston

SOUTH DAKOTA
- Rapid City

TENNESSEE
- Knoxville
- Nashville

TEXAS
- Brownsville
- Dallas
- El Paso
- Midland
- San Antonio

UTAH
- Cedar City
- Salt Lake City

VERMONT
- Burlington
- Montpelier
- Rutland

VIRGINIA
- Lynchburg
- Norfolk

WASHINGTON
- Pullman
- Seattle
- Yakima

WISCONSIN
- Madison

WYOMING
- Cheyenne
- Lander

PUERTO RICO
- San Juan

- Location

NOTE: The user should be aware of the limitations of using the default historical precipitation data. None of the 102 locations for which data are available may be representative of the study site because rainfall is spatially very variable. In addition, the 5 years for which default data are available (1974-1978 in most cases) may not be typical, but were unusually wet or dry. The user should examine the rainfall and determine how representative it is of normal, wet and dry years at the study site. In addition, simulations should be run for more than five years to determine long-term performance of the landfill using, if necessary, another precipitation input option to examine the design under the range of possible weather conditions.

2. ***Synthetic Precipitation Option*** *(Customary or Metric Units).* The program will generate from 1 to 100 years of daily precipitation data stochastically for the selected location using a synthetic weather generator. The precipitation data will have approximately the same statistical characteristics as the historic data at the selected location. If desired, the user can enter normal mean monthly precipitation values for the specific location to improve the statistical characteristics of the resulting daily values. The user is advised to enter normal mean monthly precipitation values if the project site is located more than a few miles from the city selected from Table 3 or if the land use or topography varies between the site and city. The daily values will vary from month to month and from year to year and will not equal the normal values entered. The same data is produced every time the option is used for a given location. The data required by the synthetic weather generator are:

   - Location (select from a list of 139 U.S. cities in Table 3)

   - Number of years of data to be generated

   - Normal mean monthly precipitation (Optional, default values are available.)

3. ***Create/Edit Precipitation Option*** *(Customary or Metric Units).* Under the Create option, the user may enter from 1 to 100 years of daily precipitation data manually. The years, which need not be consecutive, can be entered in any order. The user may add or delete years of data or rearrange the order of the years of data. This same option can be used to edit the daily values of any year of data; commonly, this is used to add severe storm events, such as the 25-year, 24-hour precipitation event. The data required are:

   - Location

   - One or more years of daily precipitation data

TABLE 3. CITIES FOR SYNTHETIC PRECIPITATION DATA

ALABAMA
- Birmingham
- Mobile
- Montgomery

ARIZONA
- Flagstaff
- Phoenix
- Yuma

ARKANSAS
- Fort Smith
- Little Rock

CALIFORNIA
- Bakersfield
- Blue Canyon
- Eureka
- Fresno
- Mt. Shasta
- San Diego
- San Francisco

COLORADO
- Colorado Springs
- Denver
- Grand Junction
- Pueblo

CONNECTICUT
- Windsor Locks

DELAWARE
- Wilmington

DISTRICT OF COLUMBIA
- Washington

FLORIDA
- Jacksonville
- Miami
- Tallahassee
- Tampa

GEORGIA
- Atlanta
- Augusta
- Macon
- Savannah

IDAHO
- Boise
- Pocatello

ILLINOIS
- Chicago

INDIANA
- Evansville
- Fort Wayne
- Indianapolis

IOWA
- Des Moines
- Dubuque

KANSAS
- Dodge City
- Topeka
- Wichita

KENTUCKY
- Covington
- Lexington
- Louisville

LOUISIANA
- Baton Rouge
- New Orleans
- Shreveport

MAINE
- Caribou
- Portland

MARYLAND
- Baltimore

MASSACHUSETTS
- Boston
- Nantucket

MICHIGAN
- Detroit
- Grand Rapids

MINNESOTA
- Duluth
- Minneapolis

MISSISSIPPI
- Jackson
- Meridian

MISSOURI
- Columbia
- Kansas City
- St. Louis

MONTANA
- Billings
- Great Falls
- Havre
- Helena
- Kalispell
- Miles City

NEBRASKA
- Grand Island
- North Platte
- Scottsbluff

NEVADA
- Elko
- Las Vegas
- Reno
- Winnemucca

NEW HAMPSHIRE
- Concord
- Mt. Washington

NEW JERSEY
- Newark

NEW MEXICO
- Albuquerque
- Roswell

NEW YORK
- Albany
- Buffalo
- New York
- Syracuse

NORTH CAROLINA
- Asheville
- Charlotte
- Greensboro
- Raleigh

NORTH DAKOTA
- Bismarck
- Williston

OHIO
- Cleveland
- Columbus
- Toledo

OKLAHOMA
- Oklahoma City
- Tulsa

OREGON
- Burns
- Meachem
- Medford
- Pendleton
- Portland
- Salem
- Sexton Summit

PENNSYLVANIA
- Philadelphia
- Pittsburgh

RHODE ISLAND
- Providence

SOUTH CAROLINA
- Charleston
- Columbia

SOUTH DAKOTA
- Huron
- Rapid City

TENNESSEE
- Chattanooga
- Knoxville
- Memphis
- Nashville

TEXAS
- Abilene
- Amarillo
- Austin
- Brownsville
- Corpus Christi
- Dallas
- El Paso
- Galveston
- Houston
- San Antonio
- Temple
- Waco

UTAH
- Milford
- Salt Lake City

VIRGINIA
- Norfolk
- Richmond

WASHINGTON
- Olympia
- Spokane
- Stampede Pass
- Walla Walla
- Yakima

WEST VIRGINIA
- Charleston

WISCONSIN
- Green Bay
- Lacrosse
- Madison
- Milwaukee

WYOMING
- Cheyenne

4. *NOAA Tape Precipitation Option (Customary Units).* The option will convert the NOAA Summary of Day daily precipitation data written to diskette in ASCII print as-on-tape format into the format used by Version 3 of the HELP model. The following data are required for this option:

   - Location

   - NOAA ASCII print file of Summary of Day daily precipitation data in as-on-tape format

     NOTE: Daily precipitation data and normal mean monthly precipitation values for most locations are readily available in publications or on diskette from NOAA. Information on climatological data sources can be obtained from the National Climatic Data Center (NCDC), NOAA, Federal Building, Asheville, NC 28801, (704) 259-0682.

5. *Climatedata™ Precipitation Option (Customary Units).* The program will convert daily precipitation data from an ASCII print file prepared by the Climatedata™
   CD-ROM data base program into the format used by Version 3 of the HELP model. The Climatedata™ format is used by other CD-ROM, state and regional data bases and, therefore, those files can also be converted by this option. For example, the State of California and the Midwest Climatic Data Consortium used this same format. The following data are required for this option:

   - Location

   - Climatedata™ prepared file containing daily precipitation data

     NOTE: Hydrosphere Data Products, Inc. sells NOAA Summary of the Day precipitation data in a 4-disc CD-ROM data base called Climatedata™, one disc for each of four U.S. regions. Information on Climatedata™ is available from Hydrosphere, 1002 Walnut, Suite 200, Boulder, CO 80302, (800) 949-4937.

6. *ASCII Precipitation Option (Customary or Metric Units).* The HELP model converts daily precipitation data in an ASCII file to the HELP format. Each year of ASCII precipitation data should be stored in a separate file. The first 365 or 366 values will be converted; excess data will be ignored. Inadequate data will yield an error. This option should also be used to convert data from spreadsheet format by first printing each year of precipitation to individual print files. The following data are required for this option:

   - Location

- Files containing ASCII data
- Years

7. *HELP Version 2 Data Option (Customary Units).* Version 3 of the HELP model converts precipitation data prepared for use in Version 2 of the HELP model (Schroeder et al., 1988b) into the HELP Version 3 format. This option requires the following data:

   - Location
   - File containing HELP Version 2 data

8. *Canadian Climatological Data Option (Metric Units).* The HELP model converts Canadian Climatological Data (Surface) in compressed or uncompressed diskette formats into the HELP Version 3 format. The following data are required by this option:

   - Location
   - Canadian Climatological Data file containing years of daily precipitation values

   NOTE: Canadian Climatological Data for most locations are readily available in publications of the Environment Canada, Atmospheric Environment Service, Canadian Climate Centre, Data Management Division, 4905 Dufferin Street, Downsview, Ontario, Canada M3H 5T4.

3.2.3 Temperature Data

1. *Synthetic Temperature Option (Customary or Metric Units).* The program will generate from 1 to 100 years of temperature data stochastically for the selected location. The synthetic generation of daily temperature values is a weak function of precipitation and as such the user must first specify the precipitation. Generation of temperature data is limited to the number of years of precipitation data available. The synthetic temperature data will have approximately the same statistical characteristics as the historic data at the selected location. If desired, the user can enter normal mean monthly temperature values for the specific location to improve the statistical characteristics of the resulting daily values. The user is advised to enter normal mean monthly temperature values if the project site is located more than 100 miles from the city selected from Table 1 or if the difference in elevation between the site and the city is more than 500 feet. The data required by the synthetic weather generator are:

   - Location (select from a list of 183 U.S. cities in Table 1)

- Number of years of data to be generated
- Years of daily precipitation values
- Normal mean monthly temperature (Optional, default values are available.)

2. *Create/Edit Temperature Option (Customary or Metric Units).* Under the create option, the user may enter up to 100 years of daily temperature data manually. The years, which need not be consecutive, can be entered in any order. The user may add or delete years of data or rearrange the order of the years of data. This same option can be used to edit the daily values of any year of data. The data required are:

   - Location
   - One or more years of daily temperature data

3. *NOAA Tape Temperature Option (Customary Units).* This option will convert the NOAA Summary of Day daily temperature data written to diskette in ASCII print as-on-tape format into the format used by Version 3 of the HELP model. The program will accept either mean daily temperature or daily maximum and minimum temperature values. If maximum and minimum temperatures are used, the program averages the two to compute the daily mean temperature value. If mean temperature values are used, the same file is specified as the maximum and minimum temperature files. The following data are required for this option:

   - Location
   - NOAA ASCII print file of Summary of Day data file containing years of daily maximum temperature values or daily mean temperature values in as-on-tape format
   - NOAA ASCII print file of Summary of Day data file containing years of daily minimum temperature values or daily mean temperature values in as-on-tape format

   NOTE: Daily temperature (mean or maximum and minimum) data and normal mean monthly temperature values for most locations are readily available in publications or on diskette from NOAA. Information on climatological data sources can be obtained from the National Climatic Data Center, NOAA, Federal Building, Asheville, NC 28801, (704) 259-0682.

4. *Climatedata™ Temperature Option (Customary Units).* The program will convert daily maximum and minimum temperature data from ASCII print files prepared by the Climatedata™ CD-ROM data base program into the daily mean

temperature data file format used by Version 3 of the HELP model. The Climatedata™ format is also used by other CD-ROM, state and regional data bases and therefore those files can also be converted by this option. For example, the State of California and the Midwest Climatic Data Consortium used this same format. The following data are required for this option:

- Location
- Climatedata™ prepared file containing daily maximum temperature data
- Climatedata™ prepared file containing daily minimum temperature data

NOTE: Hydrosphere Data Products, Inc. sells NOAA Summary of the Day daily temperature data in a 4-disc CD-ROM data base called Climatedata™, one disc for each of four U.S. regions. Information on Climatedata™ is available from Hydrosphere, 1002 Walnut, Suite 200, Boulder, CO 80302, (800) 949-4937.

5. *ASCII Temperature Option (Customary or Metric Units).* The HELP model converts daily mean temperature data in an ASCII file to the HELP format. Each year of ASCII temperature data should be stored in a separate file. The program will convert the first 365 or 366 values; excess data will be ignored. Inadequate data will yield an error. This option should also be used to convert data from spreadsheet format by first printing each year of temperature to individual print files. The following data are required for this option:

   - Location
   - Files containing ASCII data
   - Years

6. *HELP Version 2 Data Option (Customary Units).* Version 3 of the HELP model converts temperature data prepared for use in Version 2 of the HELP model (Schroeder et al., 1988b) into the HELP Version 3 format. This option requires the following data:

   - Location
   - File containing HELP Version 2 data

7. *Canadian Climatological Data Option (Metric Units).* The HELP model converts Canadian Climatological Data (Surface) in compressed or uncompressed diskette formats into the HELP Version 3 format. Conversion is available only for daily mean temperature values. The following data are required by this option:

- Location

- Canadian Climatological Data file containing years of daily mean temperature values

  NOTE: Canadian Climatological Data for most locations are readily available in publications of the Environment Canada, Atmospheric Environment Service, Canadian Climate Centre, Data Management Division, 4905 Dufferin Street, Downsview, Ontario, Canada M3H 5T4.

3.2.4 Solar Radiation Data

1. ***Synthetic Solar Radiation Option (Customary or Metric Units).*** The program will generate from 1 to 100 years of daily solar radiation data stochastically for the selected location. The synthetic generation of daily solar radiation values is a strong function of precipitation and as such the user must first specify the precipitation. Generation of solar radiation data is limited to the number of years of precipitation data available. The synthetic solar radiation data will have approximately the same statistical characteristics as the historic data at the selected location. If desired, the user can enter the latitude for the specific location to improve the computation of potential solar radiation and the resulting daily values. The user is advised to enter the latitude if the project site is more than 50 miles north or south of the city selected from Table 1. The data required by the synthetic weather generator are:

   - Location (select from a list of 183 U.S. cities in Table 1)

   - Number of years of data to be generated

   - Years of daily precipitation values

   - Latitude (optional, default value is available.)

2. ***Create/Edit Solar Radiation Option (Customary or Metric Units).*** Under the create option, the user may enter up to 100 years of daily solar radiation data manually. The years, which need not be consecutive, can be entered in any order. The user may add or delete years of data or rearrange the order of the years of data. This same option can be used to edit the daily values of any year of data. The input requirements are:

   - Location

   - One or more years of daily solar radiation data

3. ***NOAA Tape Solar Radiation Option*** *(Customary Units).* This option will convert the NOAA Surface Airways Hourly solar radiation data written to diskette in ASCII print as-on-tape format into the format used by Version 3 of the HELP model. The following data are required for this option:

   - Location

   - NOAA ASCII print file of Surface Airways Hourly solar radiation data in as-on-tape format

     NOTE: Daily temperature (mean or maximum and minimum) data and normal mean monthly temperature values for most locations are readily available in publications or on diskette from the NOAA. Information on climatological data sources can be obtained from the National Climatic Data Center, NOAA, Federal Building, Asheville, NC 28801, (704) 259-0682.

4. ***Climatedata™ Solar Radiation Option*** *(Customary Units).* The program will convert the Surface Airways ASCII print files of daily average solar radiation data into a daily solar radiation data file of the format used by HELP Version 3. It is anticipated that this option may also work with some other data sources as they become available. The following data are required for this option:

   - Location

   - Surface Airways prepared file containing years of daily solar radiation data

     NOTE: EarthInfo Inc. sells NOAA Surface Airways daily global solar radiation data in a 12-disc CD-ROM data base called Surface Airways as part of their NOAA data base, three discs for each of four U.S. regions. Information on Surface Airways is available from EarthInfo Inc., 5541 Central Avenue, Boulder, CO 80301-2846, (303) 938-1788. Hydrosphere Inc. is also developing a CD-ROM data base of NOAA Surface Airways data as part of their Climatedata™. Information on Climatedata™ is available from Hydrosphere, 1002 Walnut, Suite 200, Boulder, CO 80302, (800) 949-4937.

5. ***ASCII Solar Radiation Option*** *(Customary or Metric Units).* The HELP model converts daily solar radiation data in an ASCII file to the HELP format. Each year of ASCII daily solar radiation data should be stored in a separate file. The program will convert the first 365 or 366 values; excess data will be ignored. Inadequate data will yield an error. This option should also be used to convert data from spreadsheet format by first printing each year of solar radiation to individual print files. The following data are required for this option:

   - Location

- Files containing ASCII data
- Years

6. *HELP Version 2 Data Option (Customary Units).* Version 3 of the HELP model converts solar radiation data prepared for use in Version 2 of the HELP model (Schroeder et al., 1988b) into the HELP Version 3 format. This option requires the following data:

   - Location
   - File containing HELP Version 2 data

7. *Canadian Climatological Data Option (Metric Units).* The HELP model converts Canadian Climatological Data (Surface) in compressed or uncompressed diskette formats into the HELP Version 3 format. Conversion is available only for hourly global solar radiation values. The input requirements are:

   - Location
   - Canadian Climatological Data file containing years of hourly global solar radiation values

   NOTE: Canadian Climatological Data for most locations are readily available in publications of the Environment Canada, Atmospheric Environment Service, Canadian Climate Centre, Data Management Division, 4905 Dufferin Street, Downsview, Ontario, Canada M3H 5T4.

3.3 SOIL AND DESIGN DATA REQUIREMENTS

The user may enter soil data by using the default soil/material textures option, the user-defined soil texture option, or a manual option. If the user selects a default soil texture, the program will display porosity, field capacity, wilting point, and hydraulic conductivity values of the soil that is stored as default. There are 42 default soil/material textures. If user-defined soil textures are selected, the program will display the porosity, field capacity, wilting point, and hydraulic conductivity of the selected soil from the user-defined soil texture data file. In the manual soil texture option, the user must specify values for the soil parameters. General data requirements for all options are listed below. Detailed explanations are given in Sections 3.4 through 3.9.

3.3.1 Landfill General Information

1. Project title

2. Landfill area *(Customary or Metric)*

3. Percentage of landfill area where runoff is possible

4. Method of initialization of moisture storage (user-specified or program initialized to near steady-state)

5. Initial snow water storage (optional, needed when moisture storage is user-specified)

3.3.2 Layer Data

1. Layer type (Four types of layers are permitted -- 1) vertical percolation, 2) lateral drainage, 3) barrier soil liner and 4) geomembrane liner.)

2. Layer thickness *(Customary or Metric)*

3. Soil texture

   - Select from 42 default soil/material textures to get the following data.
     Porosity, in vol/vol
     Field capacity, in vol/vol
     Wilting point, in vol/vol
     Saturated hydraulic conductivity (cm/sec)

   - Select from user-built soil texture library to get the following data.
     Porosity, in vol/vol
     Field capacity, in vol/vol
     Wilting point, in vol/vol
     Saturated hydraulic conductivity (cm/sec)

   - Enter the following data for manual soil texture descriptions.
     Porosity, in vol/vol
     Field capacity, in vol/vol
     Wilting point, in vol/vol
     Saturated hydraulic conductivity (cm/sec)

4. Initial volumetric soil water content (storage), in vol/vol (optional, needed when initial moisture storage is user-specified)

5. Rate of subsurface inflow to layer *(Customary or Metric)*

3.3.3 Lateral Drainage Layer Design Data

1. Maximum drainage length *(Customary or Metric)*

2. Drain slope, percent

3. Percentage of leachate collected from drainage layer that is recirculated

4. Layer to receive recirculated leachate from drainage layer

3.3.4 Geomembrane Liner Data

1. Pinhole density in geomembrane liner *(Customary or Metric)*

2. Geomembrane liner installation defects *(Customary or Metric)*

3. Geomembrane liner placement quality (six available options)

4. Geomembrane liner saturated hydraulic conductivity (vapor diffusivity), cm/sec

5. Geotextile transmissivity, cm^2/sec (optional, when placed with geomembrane)

3.3.5 Runoff Curve Number Information

Three methods are available to define a SCS AMC II runoff curve number.

1. User-specified curve number used without modification

2. User-specified curve number modified for surface slope and slope length

3. Curve number computed by HELP program based on surface slope, slope length, default soil texture, and quantity of vegetative cover

3.4 LANDFILL PROFILE AND LAYER DESCRIPTIONS

The HELP program may be used to model landfills with up to twenty layers of materials -- soils, geosynthetics, wastes or other materials. Figure 1 shows a typical landfill profile with eleven layers. The program recognizes four general types of layers.

1. Vertical percolation layers

2. Lateral drainage layers

3. Barrier soil liners

4. Geomembrane liners

It must be noted that correct classification of layers is very important because the program models the flow of water through the four types of layers in different ways.

Flow in a vertical percolation layer (e.g., Layers 1 and 5 in Figure 1) is by unsaturated vertical drainage downward due to gravity drainage; upward flux due to evapotranspiration is modeled as an extraction. The rate of gravity drainage (percolation) in a vertical percolation layer is a function of soil moisture and soil parameters. The saturated hydraulic conductivity specified for a vertical percolation layer should be in the vertical direction for anisotropic materials. The main role of a vertical percolation layer is to provide moisture storage. Waste layers and layers designed to support vegetation and provide evaporative storage are normally designated as vertical percolation layers.

Lateral drainage layers (e.g., Layers 2, 6, 7 and 9 in Figure 1) are layers directly above liners that are designed to promote drainage laterally to a collection and removal system. Vertical flow in a lateral drainage layer is modeled in the same manner as a vertical percolation layer, but saturated lateral drainage is allowed. The saturated hydraulic conductivity specified for a lateral drainage layer should be in the lateral direction (downslope) for anisotropic materials. A lateral drainage layer may be underlain by only another lateral drainage layer or a liner. The drainage slope specified for a lateral drainage should be the slope of the surface of the liner underlying the drainage layer in the direction of flow (the maximum gradient for a section of liner in a single plane) and may range from 0 to 50 percent. The drainage length specified for a lateral drainage layer is the length of the horizontal projection of a representative flow path from the crest to the collector rather than the distance along the slope. For slopes of less than 10 percent, the difference is negligible. The drainage length must be greater than zero but does not have a practical upper limit. Recirculation is permitted from lateral drainage layers directly above a liner where 0 to 100 percent of the drainage collected can be recirculated and redistributed in a user-specified vertical percolation or lateral drainage layer.

Barrier soil liners (e.g., Layers 4, and 11 in Figure 1) are intended to restrict vertical drainage (percolation/leakage). These layers should have saturated hydraulic conductivities substantially lower than those of the other types of layers. Liners are assumed to be saturated at all times but leak only when there is a positive head on the top surface of the liner. The percolation rate depends upon the depth of water-saturated soil (head) above the base of the liner, the thickness of the liner and the saturated hydraulic conductivity. The saturated hydraulic conductivity specified for a barrier soil liner should be its value for passing the expected permeant in the vertical direction for anisotropic materials. The program allows only downward saturated flow in barrier soil liners. Evapotranspiration and lateral drainage are not permitted from a liner. Thus, any water moving into a liner will eventually percolate through the liner. In Version 3 composite liners are modeled as two layers -- a geomembrane liner and a barrier soil liner as shown in Figure 1.

Geomembrane liners (e.g., Layers 3, 8 and 10 in Figure 1) are virtually impermeable synthetic membranes that reduce the area of vertical drainage/percolation/leakage to a very small fraction of the area located near manufacturing flaws and installation defects (punctures, tears and faulty seaming). A small quantity of vapor transport across the membrane also occurs and can be modeled by specifying the vapor diffusivity as the saturated hydraulic conductivity of the geomembrane. Geomembranes leak only when there is a positive head on the top surface of the liner. The leakage rate depends on the depth of saturated soil (head) above the liner, the saturated hydraulic conductivity of the drainage limiting soil layer adjacent to the membrane, the contact between the membrane and the adjacent drainage limiting soil layer, geomembrane properties and the size and number of holes in the geomembrane liner. Aging of geomembranes is not considered.

While the HELP program is quite flexible, there are some basic rules that must be followed regarding the arrangement of layers in the profile.

1. A vertical percolation layer may not be underlying a lateral drainage layer.

2. A barrier soil liner may not be underlying another barrier soil liner.

3. A geomembrane liner may not be placed directly between two barrier soil liners.

4. A geomembrane liner may not be underlying another geomembrane liner.

5. A barrier soil liner may not be placed directly between two geomembrane liners.

6. When a barrier soil liner or a geomembrane liner is not placed directly below the lowest drainage layer, all drainage layers below the lowest liner are treated as vertical percolation layers. Thus, no lateral drainage is computed for the bottom section of the landfill.

7. The top layer may not be a barrier soil liner.

8. The top layer may not be a geomembrane liner.

9. The profile can contain no more than a total of five barrier soil liners and geomembrane liners.

The HELP model does not permit two barrier soil liners to be adjacent to each other. If a design has two soil layers adjacent to each other that would be expected to act as a single liner and both soils will remain nearly saturated and contribute significantly to the head loss and restriction of vertical drainage, then the thickness of the two layers should be summed and an effective saturated hydraulic conductivity should be computed for the combined liner. The effective saturated hydraulic conductivity should be computed as follows:

$$K_e = \frac{T_e}{\sum_{i=1}^{n} \frac{T_i}{K_i}} = \frac{T_1 + T_2}{\frac{T_1}{K_1} + \frac{T_2}{K_2}} \quad (1)$$

where

K_e = effective saturated hydraulic conductivity of combined liner
T_e = effective thickness of combined liner
T_i = thickness of liner soil i
K_i = saturated hydraulic conductivity of liner soil i
n = number of liner soils in the combined liner

For computational purposes, the soil profile is partitioned into subprofiles. Subprofiles are defined in relation to the location of the liners. The first (top) subprofile shown on Figure 1 extends from the landfill surface to the bottom of the highest liner system (bottom of the composite liner, Layer 4) upper barrier soil layer. The second subprofile extends from the top of the layer (Layer 5) below the bottom of the first liner system to the base of the second liner system (Layer 8). The third (bottom) subprofile extends from the top of the layer below the second liner system (the leakage detection drainage layer, Layer 9) to the base of the lowest liner (Layer 11). The program allows up to five liner systems and, therefore, five subprofiles plus an additional subprofile of vertical percolation layers below the bottom liner system. The program models the flow of water through one subprofile at a time from top to bottom, with the percolation or leakage from one subprofile serving as the inflow to the underlying subprofile.

3.5 SOIL CHARACTERISTICS

The user can assign soil characteristics to a layer using the default option, the user defined soil option, or the manual option. Table 4 shows the default characteristics for 42 soil/material types. The soil texture types are classified according to two standard systems, the U.S. Department of Agriculture textural classification system and the Unified Soil Classification System. The default characteristics of types 1 through 15 are typical of surficial and disturbed agricultural soils, which may be less consolidated and more aerated than soils typically placed in landfills (Breazeale and McGeorge, 1949; England, 1970; Lutton et al., 1979; Rawls et al., 1982). Clays and silts in landfills would generally be compacted except within the vegetative layer, which might be tilled to promote vegetative growth. Untilled vegetative layers may be more compacted than the loams listed in Table 4. Soil texture types 22 through 29 are compacted soils. Type 18 is representative of typical municipal solid waste that has been compacted; type 19 is the same waste but it accounts for 65 percent of the waste being in dead zones not contributing to drainage and storage. Soil types 16 and 17 denote very well compacted clay soils that might be used for barrier soil liners. The user assigns default soil characteristics to a layer by specifying the appropriate number for the material type. The

TABLE 4. DEFAULT SOIL, WASTE, AND GEOSYNTHETIC CHARACTERISTICS

Classification			Total Porosity	Field Capacity	Wilting Point	Saturated Hydraulic Conductivity
HELP	USDA	USCS	vol/vol	vol/vol	vol/vol	cm/sec
1	CoS	SP	0.417	0.045	0.018	1.0×10^{-2}
2	S	SW	0.437	0.062	0.024	5.8×10^{-3}
3	FS	SW	0.457	0.083	0.033	3.1×10^{-3}
4	LS	SM	0.437	0.105	0.047	1.7×10^{-3}
5	LFS	SM	0.457	0.131	0.058	1.0×10^{-3}
6	SL	SM	0.453	0.190	0.085	7.2×10^{-4}
7	FSL	SM	0.473	0.222	0.104	5.2×10^{-4}
8	L	ML	0.463	0.232	0.116	3.7×10^{-4}
9	SiL	ML	0.501	0.284	0.135	1.9×10^{-4}
10	SCL	SC	0.398	0.244	0.136	1.2×10^{-4}
11	CL	CL	0.464	0.310	0.187	6.4×10^{-5}
12	SiCL	CL	0.471	0.342	0.210	4.2×10^{-5}
13	SC	SC	0.430	0.321	0.221	3.3×10^{-5}
14	SiC	CH	0.479	0.371	0.251	2.5×10^{-5}
15	C	CH	0.475	0.378	0.265	1.7×10^{-5}
16	Barrier Soil		0.427	0.418	0.367	1.0×10^{-7}
17	Bentonite Mat (0.6 cm)		0.750	0.747	0.400	3.0×10^{-9}
18	Municipal Waste (900 lb/yd^3 or 312 kg/m^3)		0.671	0.292	0.077	1.0×10^{-3}
19	Municipal Waste (channeling and dead zones)		0.168	0.073	0.019	1.0×10^{-3}
20	Drainage Net (0.5 cm)		0.850	0.010	0.005	$1.0 \times 10^{+1}$
21	Gravel		0.397	0.032	0.013	3.0×10^{-1}
22	L*	ML	0.419	0.307	0.180	1.9×10^{-5}
23	SiL*	ML	0.461	0.360	0.203	9.0×10^{-6}
24	SCL*	SC	0.365	0.305	0.202	2.7×10^{-6}
25	CL*	CL	0.437	0.373	0.266	3.6×10^{-6}
26	SiCL*	CL	0.445	0.393	0.277	1.9×10^{-6}
27	SC*	SC	0.400	0.366	0.288	7.8×10^{-7}
28	SiC*	CH	0.452	0.411	0.311	1.2×10^{-6}
29	C*	CH	0.451	0.419	0.332	6.8×10^{-7}
30	Coal-Burning Electric Plant Fly Ash*		0.541	0.187	0.047	5.0×10^{-5}
31	Coal-Burning Electric Plant Bottom Ash*		0.578	0.076	0.025	4.1×10^{-3}
32	Municipal Incinerator Fly Ash*		0.450	0.116	0.049	1.0×10^{-2}
33	Fine Copper Slag*		0.375	0.055	0.020	4.1×10^{-2}
34	Drainage Net (0.6 cm)		0.850	0.010	0.005	$3.3 \times 10^{+1}$

* Moderately Compacted

(Continued)

TABLE 4 (continued). DEFAULT SOIL, WASTE, AND GEOSYNTHETIC CHARACTERISTICS

Classification		Total Porosity	Field Capacity	Wilting Point	Saturated Hydraulic Conductivity
HELP	Geomembrane Material	vol/vol	vol/vol	vol/vol	cm/sec
35	High Density Polyethylene (HDPE)				2.0×10^{-13}
36	Low Density Polyethylene (LDPE)				4.0×10^{-13}
37	Polyvinyl Chloride (PVC)				2.0×10^{-11}
38	Butyl Rubber				1.0×10^{-12}
39	Chlorinated Polyethylene (CPE)				4.0×10^{-12}
40	Hypalon or Chlorosulfonated Polyethylene (CSPE)				3.0×10^{-12}
41	Ethylene-Propylene Diene Monomer (EPDM)				2.0×10^{-12}
42	Neoprene				3.0×10^{-12}

(concluded)

user-defined soil option accepts non-default soil characteristics for layers assigned soil type numbers greater than 42. This is especially convenient for specifying characteristics of waste layers. User-specified soil characteristics can be assigned any soil type number greater than 42.

When a default soil type is used to describe the top soil layer, the program adjusts the saturated hydraulic conductivities of the soils in the top half of the evaporative zone for the effects of root channels. The saturated hydraulic conductivity value is multiplied by an empirical factor that is computed as a function of the user-specified maximum leaf area index. Example values of this factor are 1.0 for a maximum LAI of 0 (bare ground), 1.8 for a maximum LAI of 1 (poor stand of grass), 3.0 for a maximum LAI of 2 (fair stand of grass), 4.2 for a maximum LAI of 3.3 (good stand of grass) and 5.0 for a maximum LAI of 5 (excellent stand of grass).

The manual option requires values for porosity, field capacity, wilting point, and saturated hydraulic conductivity. These and related soil properties are defined below.

Soil Water Storage (Volumetric Content): the ratio of the volume of water in a soil to the total volume occupied by the soil, water and voids.

Total Porosity: the soil water storage/volumetric content at saturation (fraction of total volume).

Field Capacity: the soil water storage/volumetric content after a prolonged period of gravity drainage from saturation corresponding to the soil water storage when a soil exerts a soil suction of 1/3 bar.

Wilting Point: the lowest soil water storage/volumetric content that can be achieved by plant transpiration or air-drying, that is the moisture content where a plant will be permanently wilted corresponding to the soil water storage when a soil exerts a soil suction of 15 bars.

Saturated Hydraulic Conductivity: the rate at which water drains through a saturated soil under a unit pressure gradient.

Porosity, field capacity and wilting point are all dimensionless numbers between 0 and 1. Porosity must be greater than field capacity, which in turn must be greater than the wilting point. The wilting point must be greater than zero. The values for porosity, field capacity and wilting point are not used for liners, except for initializing the soil water storage of liners to the porosity value.

The soil moisture retention properties of a layer should be adjusted downward if some volume of the layer does not participate in the drainage and storage of infiltrated water. This condition commonly exists in shallow layers of municipal solid waste because municipal solid waste is very heterogeneous and poorly compacted. The plastics in the waste also channels the drainage, limits the spreading of infiltration, and restricts the wetting of the waste and, therefore, the storage. Default soil texture number 19 provides adjusted retention values for a municipal solid waste with significant channeling; it assumes that only 25 percent of the volume is actively involved in drainage and storage of infiltration. As the values were computed by multiplying the values for municipal solid waste (default texture number 18) by 0.25; the initial soil water content would also be multiply by 0.25.

The HELP user has the option of specifying the initial volumetric water storage (content) of all layers except liners. Liners are assumed to remain saturated at all times. If the user chooses not to specify initial water contents, the program estimates values near steady-state and then runs one year of initialization to refine the estimates before starting the simulation. The soil water contents at the end of this year of initialization are taken as the initial values for the simulation period. The program then runs the complete simulation, starting again from the beginning of the first year of data. The results for the initialization period are not reported. To improve initialization to steady-state moisture storage, the user should replace thick vertical percolation and lateral drainage layers, that are below the evaporative zone and above the saturated zone above liners, with thin layers. Then, run the simulation for a number of years until steady-state is approximated. The final dimensionless water storage values after nearing steady-state should then be specified as the initial water contents in your actual simulation using the true dimensions of the layers.

The initial moisture content of municipal solid waste is a function of the composition of the waste; reported values for fresh wastes range from about 0.08 to 0.20 vol/vol. The average value is about 0.12 vol/vol for compacted municipal solid waste. If using default waste texture 19, where 75% of the volume is inactive, the initial moisture content should be that of only the active portion, 25% of the values reported above.

The soil water storage or content used in the HELP model is on a per volume basis (θ), volume of water (V_w) per total (bulk--soil, water and air) soil volume ($V_t = V_s + V_w + V_a$), which is characteristic of practice in agronomy and soil physics. Engineers more commonly express moisture content on a per mass basis (w), mass of water (M_w) per mass of soil (M_s). The two can be related to each other by knowing the dry bulk density (ρ_{db}), dry bulk specific gravity (Γ_{db}) of the soil (ratio of dry bulk density to water density (ρ_w)), wet bulk density (ρ_{wb}), wet bulk specific gravity (Γ_{wb}) of the soil (ratio of wet bulk density to water density.

$$\theta = w \frac{\rho_{db}}{\rho_w} = w \Gamma_{db} \tag{2}$$

$$\theta = \frac{w}{1 + w} \frac{\rho_{wb}}{\rho_w} = \frac{w}{1 + w} \Gamma_{wb} \tag{3}$$

3.6 GEOMEMBRANE CHARACTERISTICS

The user can assign geomembrane liner characteristics (vapor diffusivity/saturated hydraulic conductivity) to a layer using the default option, the user-defined soil option, or the manual option. Saturated hydraulic conductivity for geomembranes is defined in terms of its equivalence to the vapor diffusivity. The porosity, field capacity, wilting point and intial moisture content are not needed for geomembranes. Table 4 shows the default characteristics for 12 geomembrane liners. The user assigns default soil characteristics to a layer simply by specifying the appropriate geomembrane liner texture number. The user-defined option accepts user specified geomembrane liner characteristics for layers assigned textures greater than 42. Manual geomembrane liner characteristics can be assigned any texture greater than 42.

Regardless of the method of specifying the geomembrane "soil" characteristics, the program also requires values for geomembrane liner thickness, pinhole density, installation defect density, geomembrane placement quality, and the transmissivity of geotextiles separating geomembranes and drainage limiting soils. These parameters are defined below.

Pinhole Density: the number of defects (diameter of hole equal to or smaller than the geomembrane thickness; hole estimated as 1 mm in diameter) in a given area generally resulting from manufacturing flaws such as polymerization deficiencies.

Installation Defect Density: the number of defects (diameter of hole larger than the geomembrane thickness; hole estimated as 1 cm^2 in area) per acre resulting primarily from seaming faults and punctures during installation.

Geotextile Transmissivity: the product of the in-plane saturated hydraulic conductivity and thickness of the geotextile.

The density of pinholes and installation defects is a subject of speculation. Ideally, geomembranes would not have any defects. If any were known to exist during construction, the defects would be repaired. However, geomembranes are known to leak and therefore reasonably conservative estimates of the defect densities should be specified to determine the maximum probable leakage quantities.

The density of defects has been measured at a number of landfills and other facilities and reported in the literature. These findings provide guidance for estimating the defect densities. Typical geomembranes may have about 0.5 to 1 pinholes per acre (1 to 2 pinholes per hectare) from manufacturing defects. The density of installation defects is a function of the quality of installation, testing, materials, surface preparation, equipment, and QA/QC program. Representative installation defect densities as a function of the quality of installation are given below for landfills being built today with the state-of-the-art in materials, equipment and QA/QC. In the last column the frequency of achieving a particular installation quality is given. The estimates are based on limited data but are characteristic of the recommendations provided in the literature.

Installation Quality	Defect Density (number per acre)	Frequency (percent)
Excellent	Up to 1	10
Good	1 to 4	40
Fair	4 to 10	40
Poor	10 to 20*	10

* Higher defect densities have been reported for older landfills with poor installation operations and materials; however, these high densities are not characteristic of modern practice.

The user must also enter the placement quality of the geomembrane liner if pinholes or installation defects are reported. There are six different possible entries for the geomembrane liner placement quality. The program selects which equation will be used to compute the geomembrane based on the placement quality specified and the saturated hydraulic conductivity of the lower permeability soil (drainage limiting soil) adjacent to

the geomembrane. The program has different equations for three ranges of saturated hydraulic conductivity: greater than or equal to 0.1 cm/sec; less than 0.1 and greater than or equal to 0.0001 cm/sec; and less than 0.0001 cm/sec.

1. *Perfect*: Assumes perfect contact between geomembrane and adjacent soil that limits drainage rate (no gap, "sprayed-on" seal between membrane and soil formed in place).

2. *Excellent*: Assumes exceptional contact between geomembrane and adjacent soil that limits drainage rate (typically achievable only in the lab or small field lysimeters).

3. *Good*: Assumes good field installation with well-prepared, smooth soil surface and geomembrane wrinkle control to insure good contact between geomembrane and adjacent soil that limits drainage rate.

4. *Poor*: Assumes poor field installation with a less well-prepared soil surface and/or geomembrane wrinkling providing poor contact between geomembrane and adjacent soil that limits drainage rate, resulting in a larger gap for spreading and greater leakage.

5. *Worst Case*: Assumes that contact between geomembrane and adjacent soil does not limit drainage rate, resulting in a leakage rate controlled only by the hole.

6. *Geotextile separating geomembrane liner and drainage limiting soil*: Assumes leakage spreading and rate is controlled by the in-plane transmissivity of the geotextile separating the geomembrane and the adjacent soil layer that would have otherwise limited the drainage. This quality would not normally be used with a geosynthetic clay liner (GCL) as the controlling soil layer. Upon wetting, the bentonite swells and extrudes into the geotextile, filling its voids and reducing its transmissivity below the point where it can contribute significantly to spreading of leakage. GCL's, when properly placed, tend to have intimate contact with the geomembrane (Harpur et al., 1993).

3.7 SITE CHARACTERISTICS

The user must also supply a value of the Soil Conservation Service (SCS) runoff curve number for Antecedent Moisture Condition II (AMC-II) or provide information so that a curve number can be computed. Unlike Version 2 of the HELP model, Version 3 accounts for surface slope effects on curve number and runoff. In Version 3 of the HELP model, there are three different options by which a curve number can be obtained.

1. A curve number defined by the user

2. A curve number defined by the user and modified according to the surface slope and slope length of the landfill

3. A curve number is computed by the HELP model based on landfill surface slope, slope length, soil texture of the top layer, and the vegetative cover. Some general guidance for selection of runoff curve numbers is provided in Figure 2 (USDA, Soil Conservation Service, 1985).

Two of the options account for surface slope. The correlation between surface slope conditions and curve number were developed for slopes ranging from 1 percent to as high as 50 percent and for slope lengths ranging from 50 feet to 2000 feet.

3.8 OVERVIEW OF MODELING PROCEDURE

The hydrologic processes modeled by the program can be divided into two categories: surface processes and subsurface processes. The surface processes modeled are snowmelt, interception of rainfall by vegetation, surface runoff, and surface evaporation. The subsurface processes modeled are evaporation from soil profile, plant transpiration, unsaturated vertical drainage, barrier soil liner percolation, geomembrane leakage and saturated lateral drainage.

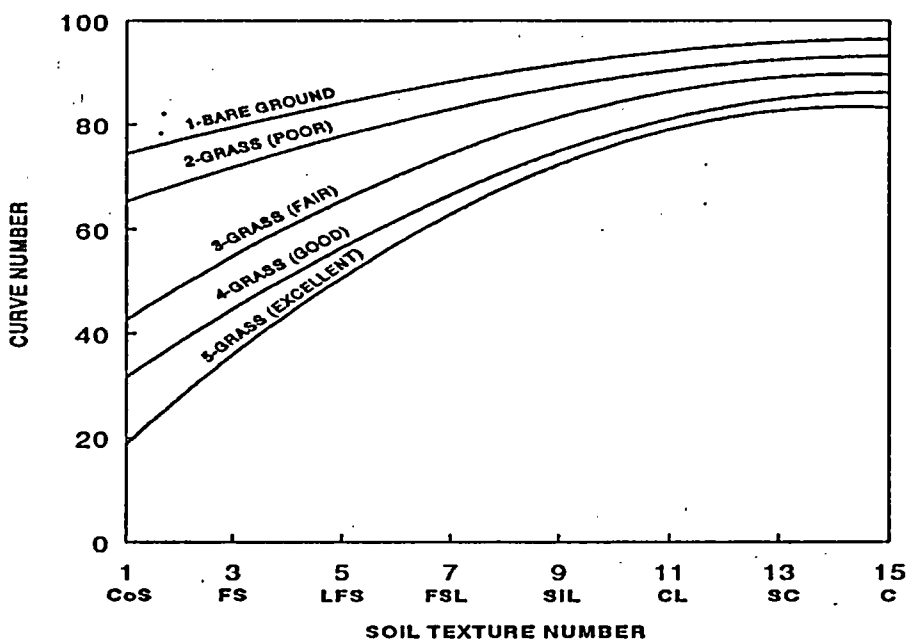

Figure 2. Relation between SCS Curve Number and Default Soil Texture Number for Various Levels of Vegetation

Daily infiltration into the landfill is determined indirectly from a surface water balance. Infiltration is assumed to equal the sum of rainfall, surface storage and snowmelt, minus the sum of runoff, additional storage in snowpack and evaporation of surface water. No liquid water is assumed to be held in surface storage from one day to the next except in the snowpack or when the top soil is saturated and runoff is not permitted. Each day, the free available water for infiltration, runoff, or evaporation from water on the surface is determined from the surface storage, discharge from the snowpack, and rainfall. Snowfall is added to the surface snow storage, which is depleted by either evaporation or melting. Snowmelt is added to the free available water and is treated as rainfall except that it is not intercepted by vegetation. The free available water is used to compute the runoff by the SCS rainfall-runoff relationship. The interception is the measure of water available to evaporate from the surface. Interception in excess of the potential evaporation is added to infiltration. Surface evaporation is then computed. Potential evaporation from the surface is first applied to the interception; any excess is applied to the snowmelt, then to the snowpack and finally to the groundmelt. Potential evaporation in excess of the evaporation from the surface is applied to the soil column and plant transpiration. The snowmelt and rainfall that does not run off or evaporate is assumed to infiltrate into the landfill along with any groundmelt that does not evaporate.

The first subsurface processes considered are soil evaporation and plant transpiration from the evaporative zone of the upper subprofile. A vegetative growth model accounts for the daily growth and decay of the surface vegetation. The other subsurface processes are modeled one subprofile at a time, from top to bottom, using a design-dependent time step ranging from 30 minutes to 6 hours. A storage-routing procedure is used to redistribute the soil water among the modeling segments that comprise the subprofile. This procedure accounts for infiltration or percolation into the subprofile and evapotranspiration from the evaporative zone. Then, if the subprofile contains a liner, the program computes the head on the liner. The head on the liner is then used to compute the leakage/percolation through the liner and, if lateral drainage is permitted above the top of the liner, the lateral drainage to the collection and removal system.

3.9 ASSUMPTIONS AND LIMITATIONS

3.9.1 Solution Methods

The modeling procedures documented in the previous section are necessarily based on many simplifying assumptions. Generally, these assumptions are reasonable and consistent with the objectives of the program when applied to standard landfill designs. However, some of these assumptions may not be reasonable for unusual designs. The major assumptions and limitations of the program are summarized below.

Runoff is computed using the SCS method based on daily amounts of rainfall and snowmelt. The program assumes that areas adjacent to the landfill do not drain onto the

landfill. The time distribution of rainfall intensity is not considered. The program cannot be expected to give accurate estimates of runoff volumes for individual storm events on the basis of daily rainfall data. However, because the SCS rainfall-runoff relation is based on considerable daily field data, long-term estimates of runoff should be reasonable. The SCS method does not explicitly consider the length and slope of the surface over which overland flow occurs. This limitation has been removed by developing and implementing into the HELP input routine a procedure for computing curve numbers that take into consideration the effect of slope and slope length. The limitation, however, remains on the user specified curve number (the first method). This limitation is not a concern provided that the slope and slope length of the landfill do not differ dramatically from those of the test plots upon which the SCS method is based. Use of the SCS method probably underestimates runoff somewhat where the overland flow distance is very short or the slope is very steep or when the rainfall duration is very short and the intensity is very high.

The HELP model assumes Darcian flow by gravity influences through homogeneous soil and waste layers. It does not consider explicitly preferential flow through channels such as cracks, root holes, or animal burrows but allows for vertical drainage through the evaporative zone at moisture contents below field capacity. Similarly, the program allows vertical drainage from a layer at moisture contents below field capacity when the inflow would occupy a significant fraction of the available storage capacity below field capacity. The drainage rate out of a segment is assumed to equal the unsaturated hydraulic conductivity of the segment corresponding to its moisture content, provided that the underlying segment is not a liner and is not saturated. In addition to these special cases, the drainage rate out of a segment can be limited by the saturated hydraulic conductivity of the segment below it. When limited, the program computes an effective gradient for saturated flow through the lower segment. This permits vertical percolation or lateral drainage layers to be arranged without restrictions on their properties as long as they perform as their layer description implies and not as liners.

The model assumes that a. the soil moisture retention properties and unsaturated hydraulic conductivity can be calculated from the saturated hydraulic conductivity and limited soil moisture retention parameters (porosity, field capacity and wilting point) and b. the soil moisture retention properties fit a Brooks-Corey relation (Brooks et al., 1964) defined by the three soil moisture retention parameters. Upon obtaining the Brooks-Corey parameters, the model assumes that the unsaturated hydraulic conductivity relation with soil moisture is well described by the Campbell equation.

The model does not explicitly compute flow by differences in soil suction (soil suction gradient) and, as such, does not model the draw of water upward by capillary drying. This draw of water upward is modeled as an extraction rather than transport of water upward. Therefore, it is important that the evaporative zone depth be specified as the depth of capillary drying. Drainage downward by soil suction exerted by dry soils lower in the landfill profile is modeled as Darcian flow for any soil having a relative moisture content greater than the lower soils. The drainage rate is equal to the

unsaturated hydraulic conductivity computed as a function of the soil moisture content. As such, the rate is assumed to be independent of the pressure gradient.

Leakage through barrier soil liners is modeled as saturated Darcian flow. Leakage is assumed to occur only as long as there is head on the surface of the liner. The model assumes that the head driving the percolation can be represented by the average head across the entire liner and can be estimated from the soil moisture storage. It is also assumed that the liner underlies the entire area of the landfill and, conservatively, that when leakage occurs, the entire area of the landfill leaks. The model does not consider aging or drying of the liner and, therefore, the saturated hydraulic conductivity of the liner does not vary as a function of time.

Geomembranes are assumed to leak primarily through holes. The leakage passes through the holes and spreads between the geomembrane and soil until the head is dissipated. The leakage then percolates through the soil at the rate dependent on the saturated hydraulic conductivity and the pressure gradient. Therefore, the net effect of a geomembrane is to reduce the area of percolation through the liner system. The program assumes the holes to be uniformly distributed and the head is distributed across the entire liner. The model does not consider aging of the liner and therefore the number and size of the holes do not vary as a function of time. In addition, it is conservatively assumed that the head on the holes can be represented by the average head across the entire liner and can be estimated from the soil moisture storage and that the liner underlies the entire area of the landfill.

The lateral drainage model is based on the assumption that the saturated depth profile is characteristic of the steady-state profile for the given average depth of saturation. As such, the model assumes that the lateral drainage rate for steady-state drainage at a given average depth of saturation is representative of unsteady lateral drainage rate for the same average saturated depth. In actuality the rate would be somewhat larger for periods when the depth is building and somewhat smaller for periods when the depth is falling. Steady drainage implies that saturated conditions exist above the entire surface of the liner, agreeing with the assumptions for leakage through liner systems.

The model assumes the vegetative growth and decay can be characterized by a vegetative growth model developed for crops and perennial grasses. In addition, it is assumed that the vegetation transpires water, shades the surface, intercepts rainfall and reduces runoff in similar quantities as grasses or as an adjusted equivalence of LAI.

3.9.2 Limits of Application

The model can handle water routing through or storage in up to twenty soil or waste layers; as many as five liner systems may be employed. The simulation period can range from 1 to 100 years. The model cannot simulate a capillary break or unsaturated lateral drainage.

The model has limits on the arrangement of layers in the landfill profile. Each layer must be described as being one of four types: vertical percolation layer, lateral drainage layer, barrier soil liner, or geomembrane liner. The model does not permit a vertical percolation layer to be placed directly below a lateral drainage layer. A barrier soil liner may not underlie another barrier soil liner. Geomembranes cannot envelop a barrier soil liner and barrier soil liners cannot envelop a geomembrane. The top layer may not be a liner. If a liner is not placed directly below the lowest lateral drainage layer, the lateral drainage layers in the lowest subprofile are treated by the model as vertical percolation layers. No other restrictions are placed on the order of the layers.

The lateral drainage equation was developed for the expected range of hazardous waste landfill design specifications. Permissible ranges for slope of the drainage layer are 0 to 50 percent. Due to dimensionless structure of the lateral drainage equation, there are no practical limits in the maximum drainage length.

Several interrelations must exist between the soil characteristics of a layer and of the soil subprofile. The porosity, field capacity and wilting point can theoretically range from 0 to 1 units of volume per volume; however, the porosity must be greater than the field capacity, and the field capacity must be greater than the wilting point.
Initial soil moisture storage must be greater than or equal to the wilting point and less than or equal to the porosity. The initial moisture content of liners must be equal to the porosity and the liners remain saturated. The field capacity and wilting point values are not used for barrier soil liners. Values for porosity, field capacity and wilting point are not needed for geomembranes.

Values for the leaf area index may range from 0 for bare ground to 5 for an excellent stand of grass. Detailed recommendations for leaf area indices and evaporative depths are given in the program.

The default values for the evaporation coefficient are based on experimental results. The basis for the calculation of these default values is described by Schroeder et al. (1994). The model imposes upper and lower limits of 5.1 and 3.3 so as not to exceed the range of experimental data.

Surface runoff from adjacent areas does not run onto the landfill, and the physical characteristics of the landfill specified by the user remain constant over the modeling period. No adjustments are made for the changes that occur in these characteristics as the landfill ages. Additionally, the program cannot model the filling process within a single simulation. Aging of materials and staging of the landfill operation must be modeled by successive simulations.

Default Soil Characteristics

The HELP model contains default values of soil characteristics based on soil texture class. The documentation for Version 3 describes the origin of these default values

(Schroeder et al., 1994). Recommended default values for LAI and evaporative depth based on thick loamy top soils are given in the program.

Manual Soil Characteristics

The HELP model computes values for the three Brooks-Corey parameters as described in the documentation for Version 3 (Schroeder et al., 1994) based on the values for porosity, field capacity and wilting point.

Soil Moisture Initialization

The soil moisture of the layers may be initialized by the user or the program. When initialized by the program, the process consists of three steps. The first step sets the soil moisture of all layers except barrier soil liners equal to field capacity and all barrier soil liners to porosity (saturation). In the second step, the program computes a soil moisture for each layer below the top barrier soil liner. These soil moisture contents are computed to yield an unsaturated hydraulic conductivity equal to 85 percent of the lowest effective saturated hydraulic conductivity of the all liner systems above the layer, including consideration for the presence of a synthetic geomembrane liner. If the unsaturated hydraulic conductivity is less than 1×10^{-6} cm/sec and if the computed soil moisture is greater than field capacity, the soil moisture is set to equal computed soil moisture instead of the field capacity. The third step in the initialization consists of running the model for one year of simulation using the first year of climate data and the initial soil moisture values selected in the second step. At the end of this year of initialization, the soil moisture values existing at that point are reported as the initial soil moisture values. The simulation is then restarted using the first year of climate data.

Synthetic Temperature and Solar Radiation Values

The synthetically generated temperature and solar radiation values are assumed to be representative of the climate at the site. Synthetic daily temperature is a function of normal mean monthly temperature and the occurrence of rainfall. Synthetic daily solar radiation is a function of latitude, occurrence of rainfall, average daily dry-day solar radiation and average daily wet-day solar radiation.

SECTION 4

PROGRAM INPUT

4.1 INTRODUCTION

This section describes the procedures and options available to input data, execute the model, and obtain results. The discussion includes general input information, some definitions and rules, the program structure, and detailed explanations of the options reached from the Main Menu. Guidance is given throughout the section for selecting the most appropriate values in certain situations, but the main purpose of this section is to describe the mechanics of using the user interface. Detailed guidance on the definitions of input parameters and selection of their values is presented in Section 3.

Version 3 of the HELP program is started by typing "HELP3" from the DOS prompt in the directory where the program resides. The program starts by displaying a title screen, a preface, a disclaimer and then the main menu. The user moves from the title screen to the main menu by striking any key such as the space bar. Upon reaching the main menu, the user can select any of seven options. The program automatically solicits input from the user based on the option selected. In general the HELP model requires the following data, some of which may be selected from the default values.

1. Units
2. Location
3. Weather data file names
4. Evapotranspiration information
5. Precipitation data
6. Temperature data
7. Solar radiation data
8. Soil and design data file name
9. General landfill and site information
10. Landfill profile and soil/waste/geomembrane data
11. SCS runoff curve number information

4.2 DEFINITIONS AND RULES

There are a few fundamental rules regarding the input facility that a user must keep in mind when using the model. These rules should be followed to move around the screens and to move within the same screen. Below are some definitions and rules.

1. Screens. A screen in the HELP user interface as used in this report is a single screen of information. These screens are divided into three categories:

- Input Screen: a screen on which the user can input data

- Selection Screen: a screen from which the user selects an entry from a list

- On-line Help Screen: a screen where assistance is provided. General assistance on the interface is displayed by pressing the ***F1*** key, technical assistance by pressing the ***F2*** key, and key operations by pressing the ***F3*** key.

This terminology is used throughout this section. Each module consists of two types of screens: "primary" and "secondary." Primary screens are main screens that form a loop for each option of HELP. Secondary screens are displayed from the primary screens as part of the input process. These screens can be input screens or selection screens.

2. ***Input Cells.*** When the program highlights a number of spaces (called an "input cell" throughout this section), an input from the user is expected. At any input cell, the user has one of several options: enter the data requested, accept existing value, seek on-line help, or select one of the menu items listed at the bottom of the screen. Each cell is associated with a variable that is used directly or indirectly in the HELP model. Therefore, every effort must be made to assign a value to each cell when applicable. The user may input the value the first time around, or return to the cell at a later time during the program session. If an input cell is left blank, a value of zero will be assigned to the corresponding variable. If zero is not an appropriate answer to the question, it will produce erroneous results. The program will warn the user when a blank or zero is an inappropriate value.

   Trailing decimal points are not required on input because the program automatically knows whether to treat a value as an integer or a floating point variable. For example, if a user wishes to enter the number nine, either 9, 9. or 9.00 is acceptable, provided the input cell is wide enough.

3. ***Selection Cells.*** These are cells that are used to select from a list of options. Selection cells highlight one item at a time. An item/option must be highlighted before it can be selected. Selection is made by pressing the ***Enter*** key.

4. ***Moving Between Cells.*** The user can move from one input screen to another, by pressing the ***Page Down*** key for the next screen or ***Page Up*** key for the previous screen in the loop of primary or secondary screens. Input screens are arranged in a loop format such that if the ***Page Down*** key is pressed from the last input screen the control will return to the first screen, and vice versa. The ***up and down arrows*** are used to move up and down through the cells of a screen. If the ***up arrow*** is pressed from the first cell on the screen, control will transfer to the last cell on the same screen, and vice versa. The ***Tab and Shift-Tab*** keys can be used to move to the right and to the left, respectively, among input and selection cells that are located on the same line. In addition, the ***left and right arrows*** may be used to move between

selection cells that are located on the same line.

5. ***Moving Within an Input Cell.*** Each input cell is set to a given width depending on the type of information expected to be entered in that cell. The cursor will be initially located on the first character space of the cell. The ***left and right arrow*** keys may be used to move the cursor to different spaces within the cell. If a value is typed in the first space of the cell, the cell contents will be deleted. To delete a character, move the cursor to the character location and then press the ***Delete*** key, or move the cursor to the space that is to the right of the character and then press the ***Backspace*** key. A character can be inserted between characters in an input cell by moving the cursor to the desired position and then pressing the ***Insert*** key. The ***Insert*** key will shift all characters that are at and to the right of the cursor one position to the right.

6. ***Terminating.*** At any time during the session, the user may press the ***F9*** key to quit without saving changes, return to the main menu or exit the program. The ***Esc*** key and the ***Ctrl-Break*** keys will end some options and allow you to continue with other operations. The ***F10*** key is used to save the data or proceed. If necessary, the user can terminate input or execution by rebooting (***Ctrl-Alt-Del*** keys), resetting, or turning off the computer; however, the user is discouraged from terminating a run in these manners because some of the data may be lost.

7. ***On-Line Help.*** On-line help is available to the user from any cell location on the screen. By pressing ***F1***, information about the operations and purpose of the screen is displayed, and by pressing ***F2***, specific technical assistance for the highlighted cell is displayed. Note that the on-line help screens contain sections from this User's Guide and that the figures and tables mentioned on the screens are located in this document. The ***F3*** key displays various functions of keystrokes. Other specific information of the input screen is listed in menu line(s) at the bottom of screen.

8. ***System of Units.*** Throughout the HELP program the user is required to select a system of units. The HELP model allows the user to use either the customary system of units (a mixture of U.S. Customary and metric units traditionally used in landfill design and in Version 2 of the HELP model) or the Metric (SI) system of units. The user is not restricted to the same system for all data types; for example, the soil and design data can be in one system of units and the weather data can be in the other system. Moreover, it is not necessary for all types of weather data to have the same system of units (i.e., evapotranspiration data can be in the Metric system of units, while precipitation data is in customary units; the solar radiation data can be in customary units, while temperature data is in Metric units, and so on). Appropriate units are displayed in proper locations to keep the user aware of which units should be used for each data entry. Consistency in units is only required within each data type.

4.3 PROGRAM STRUCTURE

The flow or logic of the input facility of the HELP program may be viewed as a tree structure. The tree structure consists of nodes where new branches of the tree are started. The first node is called the trunk, root or parent node, and the terminal nodes of the tree are called leaves. All components (nodes) of the tree structure in the HELP model are screens that have different functions as defined previously, with the trunk node being the Main Menu. During an input session, the user should reach the leaf node if all the data for a given branch (module) are entered. Some of the nodes (screens) are common to more than one branch. The user must return to the node where the branch started in order to go to another branch. These movements can be accomplished with the special keys discussed above, such as ***Page Up, Page Down, F9, F10,*** etc.

4.4 MAIN MENU

At the beginning of each run, the Main Menu is displayed. A schematic of the main menu in Figure 3 shows the seven available modules (branches). Selection from the main menu is made by either moving the cursor to the desired module or by pressing the number of that option. Once a selection is made, program control transfers into an environment specific to that option and cannot transfer to another main menu option without exiting that environment to the main menu and then selecting another option. A brief description of each main menu option is presented below. More details are given in the following sections about specific data requirements for each option.

Option 1 on the main menu is ***"Enter/Edit Weather Data."*** This module permits the user to read evapotranspiration, precipitation, temperature, and solar radiation data files and then review, edit, and save the data or create new files. There are four primary screens in this module; they are a file selection screen, evapotranspiration data screen, a screen that controls the method used for specifying precipitation, temperature and solar radiation data, and a screen for saving weather data files. Several options are available for specifying precipitation, temperature and solar radiations data. These vary from using default data (for precipitation only) to synthetic and other user-defined data sources, such as NOAA Tape, Climatedata™, ASCII data, HELP Version 2 data, and Canadian Climatological data. Data may also be entered manually. Default and synthetic weather data generation is performed by selecting the city of interest from a list of cities and specifying (optional) additional data.

Option 2 on the main menu is ***"Enter/Edit Soil and Design Data."*** This module allows the user to read an already existing soil and design data file and then review, edit, and save the data or create a new data file. There are eight primary screens in the soil and design data module; they are a file selection screen, a landfill general information screen, three screens for entering design, soil and geomembrane liner data by layers, a screen for entering a runoff curve number, a data verification screen, and a screen for saving the soil and design data file. Input screens associated with this module provide

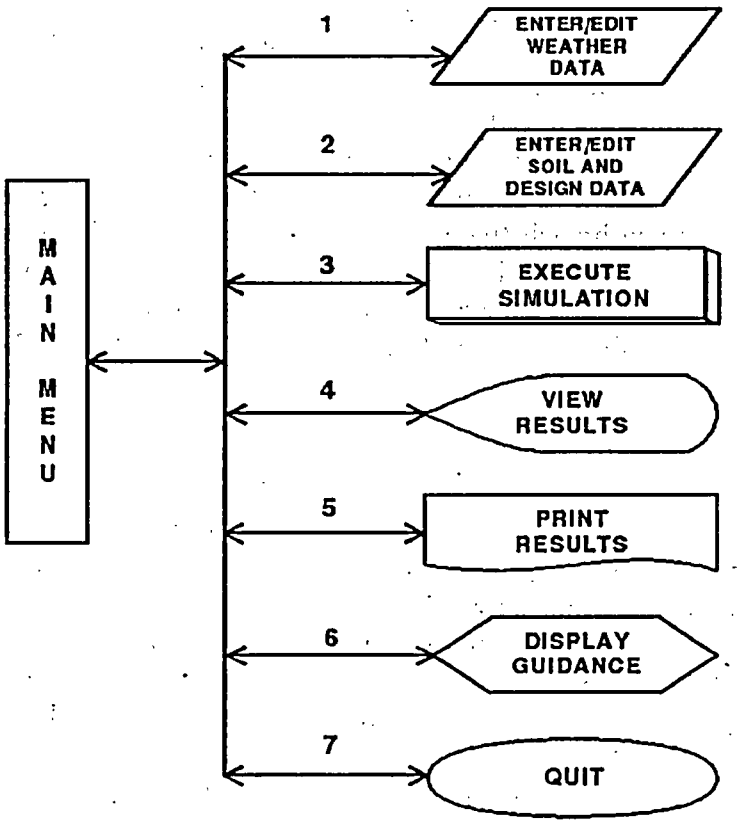

Figure 3. HELP3 Main Menu

cells for entering project title; system of units; initial soil conditions; landfill area; layer design information, such as layer type, thickness, soil texture, drainage characteristics; geomembrane liner information; and runoff curve number information including the ability to adjust the curve number a function of surface slope and length. At the end of this module, the user may request that the data be checked for possible violation of the design rules explained in Section 3. Under this module, the HELP model verifies the design data, soil and geomembrane liner properties and layer arrangement.

Option 3 on the main menu is ***"Execute Simulation."*** In this option the user defines the data files to be used in running the simulation component of the HELP model and selects the output frequency and simulation duration desired from execution. In this option the user can also view the list of files available and can make file selections from these lists.

Option 4 on the main menu is ***"View Results."*** This option allows the user to browse through the output file and examine the results of the run after executing the program. Option 5 is ***"Print Results,"*** and Option 6 is ***"Display Guidance"*** on general landfill design procedures and on the HELP model itself, containing much of the text of this user's guide. Finally, Option 7 is used to ***"Quit"*** running the model and return to DOS.

In the following sections, detailed explanations of the main menu options are presented, and methods of data entry to the program and various options are discussed.

4.5 WEATHER DATA

As mentioned above, this module is selected from the main menu by pressing 1, *"Enter/Edit Weather Data."* A schematic of this module is shown in Figure 4. In this module, the user can specify all of the weather data (evapotranspiration, precipitation, temperature and solar radiation) required to run the model. The four primary screens in this module are "Weather Data - File Editing", "Evapotranspiration Data", "Precipitation, Temperature, and Solar Radiation Data", and "Weather Data - File Saving". Several secondary screens may appear during the session depending upon the action taken by the user. On-line help screens are always available for display by pressing ***F1 or F2.*** The individual primary screens and their secondary screens of this module are discussed below.

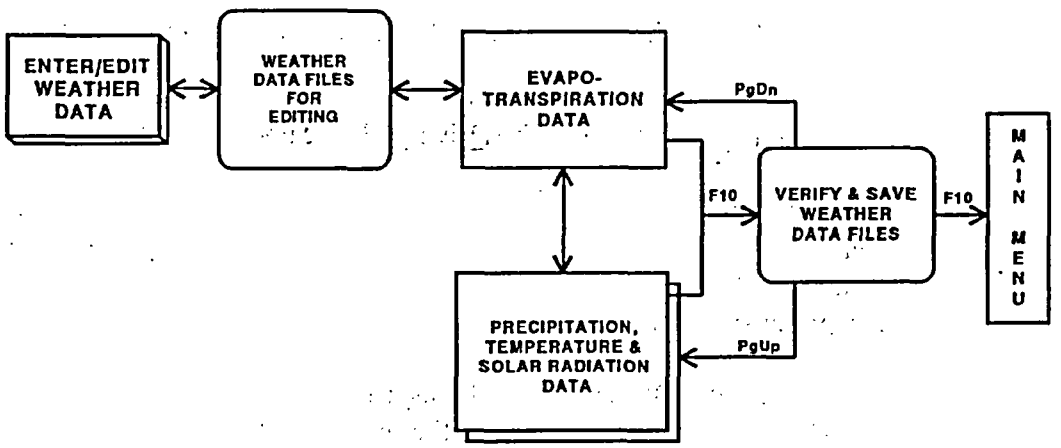

Figure 4. Schematic of Weather Data Module

4.5.1 Weather Data File Selection

The first screen in the weather data module is the "Weather Data - File Editing" screen. A schematic of this screen is shown in Figure 5. On this screen, the user may enter file names of existing files to select previously generated HELP Version 3 files for editing or leave the file names blank to create new data. One file name for each of the four types of weather data to be edited is needed. The DOS path may be specified if different from the active or default drive and subdirectory, such as C:\HELP3\DATA. The following gives file naming and extension information as displayed on the screen.

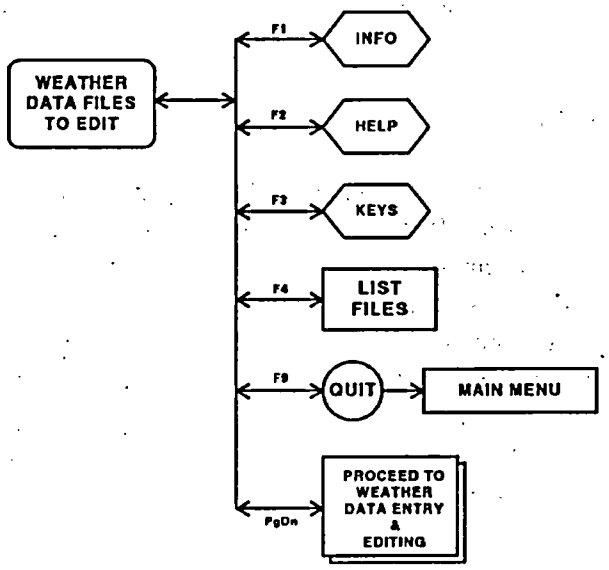

Figure 5. Schematic of "Weather Data - File Editing" Screen

Data Type	DOS Path (Drive and/or Subdirectory)	User Specified File Name
Precipitation		*.D4
Temperature		*.D7
Solar radiation		*.D13
Evapotranspiration		*.D11

* Any valid DOS name that the user desires (up to eight characters) is acceptable. The HELP program supplies the extension.

This convention must be always remembered when selecting file names for editing, saving, or converting data from other sources. However, when typing a file name on this screen, the user should not enter the extension because the program automatically assigns the proper extension to the file according to the weather types.

The current directory is displayed on the screen. The user may obtain a listing of all data files that reside on the current directory by pressing ***F4***. By pressing ***F4***, the program obtains a directory of all files that pertain to the weather data cell from which ***F4*** was pressed. For example, if ***F4*** was pressed from the temperature file cell, the program will display the list of files with an extension of D7 that reside on the currently specified directory. Up to 120 data files for any weather data type can be displayed on the screen. The name of the current directory where these files are located is also displayed. To obtain the data files pertaining to the weather information needed that reside in another directory, the user should type in the name of a valid drive and

subdirectory in the Directory column and then press *F4* for the list of files in that subdirectory. To display a directory for another type of data, move the cursor to the row for that data type and repeat the process listed above.

To select a file from the list of displayed files, move the cursor to the desired file name and press *Enter*. This action transfers control back to the previous screen, and the name of the file just selected will be displayed in the proper cell. The user can exit the "Data Files" screen without selecting a file by pressing the *Esc* key.

If the user wants to enter the file name in the file cell, the user must first enter the correct directory name. If an invalid directory is entered, the program will displayed the message, "Invalid Directory," and replace the entered directory name with the default directory name (where the program was started). The user then has another opportunity to enter the correct directory name. If the program cannot find the file name as entered, the message, "File Not Found," will be displayed. The previously entered file name is erased and the user has another opportunity to enter a correct file name. Pressing ***Page Down*** causes the program to read the valid data files selected and then proceeds to the first weather data entry screen.

4.5.2 Evapotranspiration (ET) Data

The evapotranspiration data requirements are listed in Section 3 and are entered to the program from the "Evapotranspiration Data" screen. This screen contains all information required by the HELP model to construct the evapotranspiration data file (*.D11). If the user specified an edit file name for the evapotranspiration data, the contents of the file will be displayed in the appropriate cells on this screen. The user can move the cursor to any cell to edit its contents. However, if no file was selected as an edit file, then data must be specified by the user. First, the user must select the system of units to be used for the evapotranspiration data, which may be entered in customary or metric units as explained in a previous section. A schematic of this screen is shown in Figure 6. The two methods for entering this data are the manual option and the default option.

Manual Option

This option requires the user to enter all evapotranspiration data manually. The user should first specify a location in the form of a city, state and latitude, followed by the evaporative zone depth, the maximum leaf area index, the Julian dates of the start (planting) and end (harvest) of the growing season, the annual average wind speed, and quarterly average relative humidities (in percentages) for the entered location.

Default Option

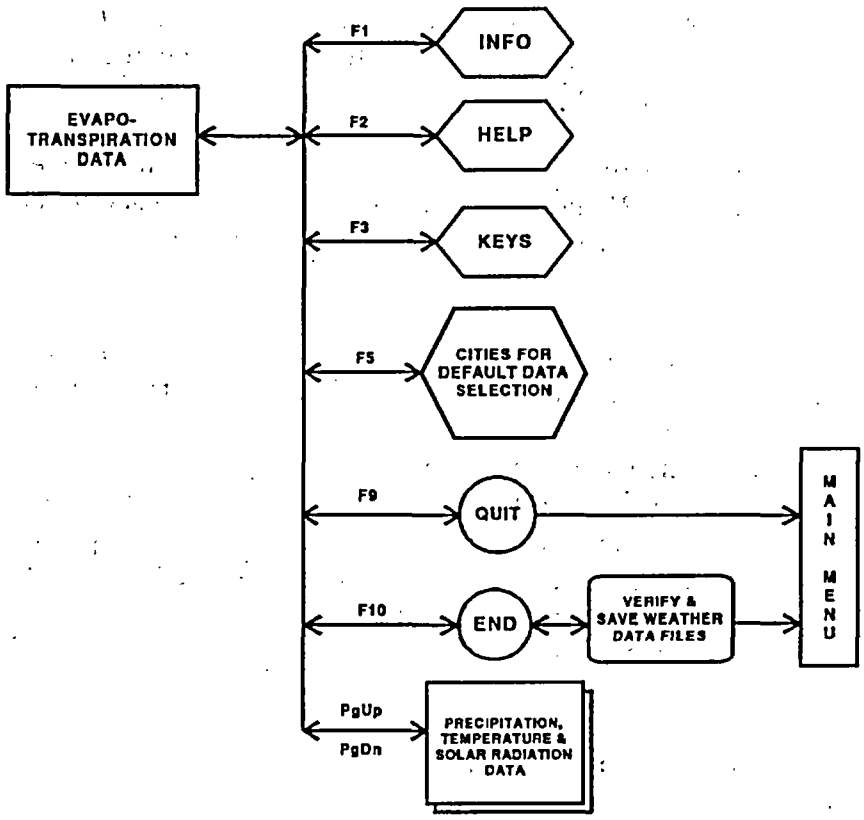

Figure 6. Schematic of "Evapotranspiration Data" Screen

This option takes advantage of an available list of cities for which default values are provided for most of the evapotranspiration data; guidance information is available for the rest of the data. This option is triggered from any input cell on the "Evapotranspiration Data" screen by pressing *F5* and selecting a location (state and city) from a displayed list of locations. This list of cities is the same as that in Table 3.

Once a city is selected, the program automatically displays values in the appropriate input cells for the city, state, latitude, growing season dates, wind speed, and the four quarterly humidity values for that location. The program, however, displays guidance information on the evaporative zone depth for that location depending on the vegetative cover. The user must enter a value of the evaporative zone depth that is appropriate for the landfill design, location, top soil, and vegetation. (See Section 3 for detailed guidance.)

The user must also enter a value for the maximum leaf area index for the site. If the value entered is greater than the default maximum allowable value based on the climate for the selected city, the program will display that value only as a guidance to the user. The user is not forced to change the entered value.

If the user decides to edit the name of the city or state, the program will erase the

guidance information. Guidance is provided only for cities that are selected from the list obtained by pressing *F5*.

The location of the landfill being evaluated is likely to be some distance from all of the listed cities. In this case, the user has the option to select a city that has an similar climate and edit the values to improve the data or to simply enter the information manually.

The bottom line of the "Evapotranspiration Data" screen provides additional help information. Once all data are entered, the user can move on to another screen by pressing ***Page Up*** or ***Page Down***, return to the main menu by pressing ***F9***, or proceed to save the evapotranspiration data by pressing ***F10***.

4.5.3 Precipitation, Temperature and Solar Radiation Data

The second screen in the weather data module is entitled "Precipitation, Temperature and Solar Radiation." From this screen, the user can select methods for creating the precipitation data file (*.D4), the temperature data file (*.D7), and the solar radiation data file (*.D13). A schematic of the main options available on this screen are shown in Figure 7. In Version 3 of the HELP model, all of the weather data need not be generated by the same method. For example, the user can enter the precipitation data using the synthetic weather generator, the temperature data using data from a NOAA data file, and solar radiation from an ASCII file. Seven options are available for entering temperature and solar radiation data. Under the precipitation data there are the same seven plus a default option. Figures 8, 9, and 10 show the possible options.

Default Precipitation

If the ***default precipitation option*** (*Customary Units Only*) is selected, the program will prompt the user with the list of states having default data. The HELP model provides default precipitation values for the list of cities in Table 1. To select a state, move the cursor to the desired state name and press ***Enter***. At this time the program prompts the user with the list of cities in the selected state for which default precipitation data is available. Similarly, the city can be selected by moving the cursor to the desired city and pressing ***Enter***. The user can return to the "Precipitation, Temperature and Solar Radiation" screen from either list by pressing *Esc*. By doing so, neither a city nor a state is considered selected. However, once a city is selected, the program reads the five years of default precipitation data for the selected city. The usefulness of the default precipitation option is limited since it contains only five years of precipitation data. It is additionally limiting since these five years may be dry or wet years and may not be representative of the site in question.

The following options are available for entering "Precipitation, Temperature, and Solar Radiation" data.

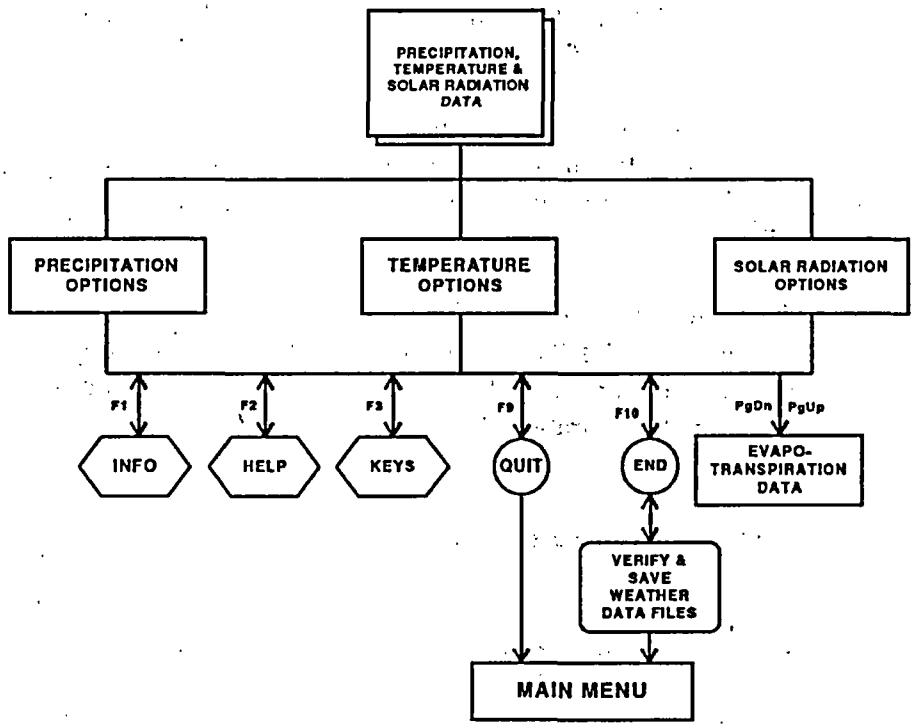

Figure 7. Schematic of "Precipitation, Temperature and Solar Radiation" Screen

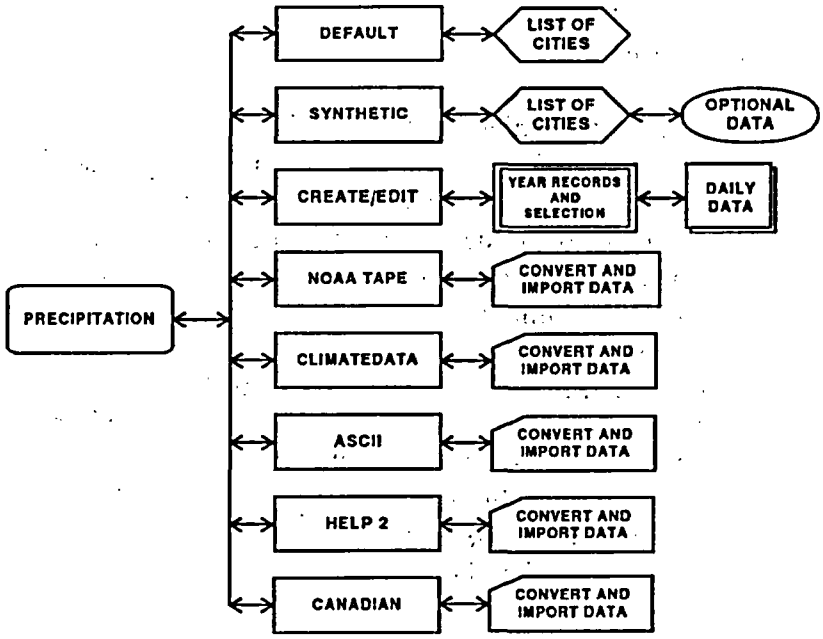

Figure 8. Precipitation Options

Synthetic

The second available method for entering precipitation data is to use the ***synthetic weather generator*** (*Customary or Metric Units*). (This is the first method on the screen for entering temperature and solar radiation data.) This option can be selected for temperature and solar radiation only if the user has previously entered precipitation data since the synthetic weather generator requires precipitation values for generating both temperature and solar radiation. By selecting the synthetic data option, the program prompts the user with a list of states for which it has synthetic weather data coefficients. Again the user can move the cursor to the appropriate state and press ***Enter*** to obtain the list of cities in that state for which synthetic data can be generated. From this list, the user can select the city where the project is located or a city with a climate similar to the project location. Selection is accomplished by moving the cursor to the selection cell highlighting the desired city and pressing ***Enter***. At any time, the user may abandon the input for the synthetic weather generator by pressing ***Esc***; the program will return to the "Precipitation, Temperature and Solar Radiation" screen without loss of previously entered data.

Once a city is selected, the program displays another screen called "Synthetic Precipitation Data", "Synthetic Temperature Data" or "Synthetic Solar Radiation Data." On this screen, the city and state are displayed, and the user is asked to provide additional

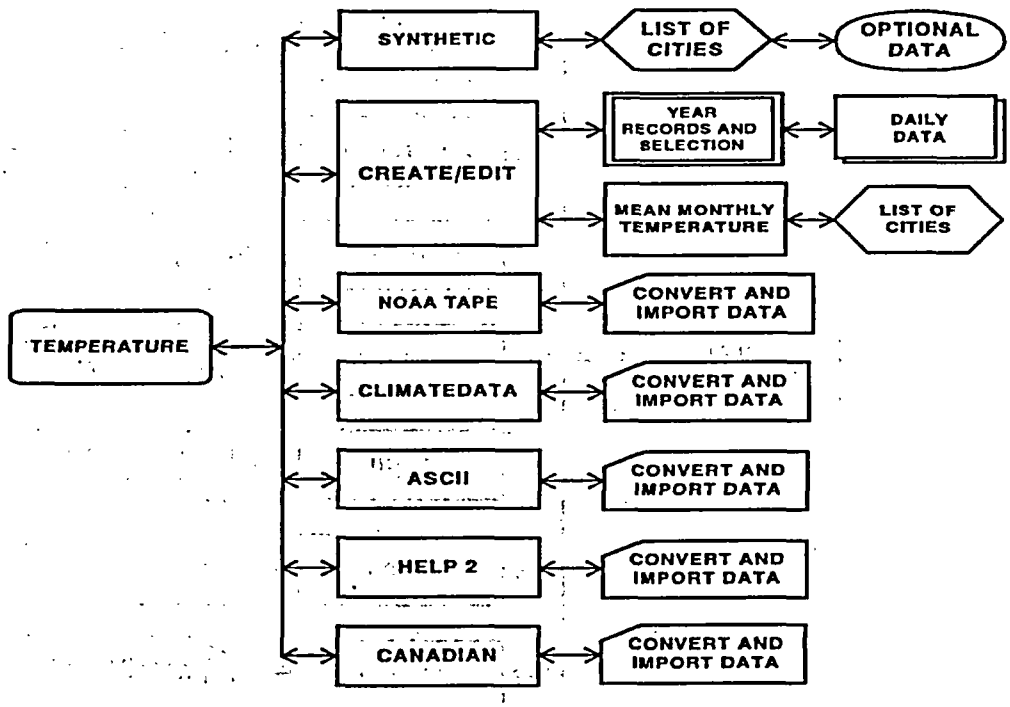

Figure 9. Temperature Options

information. The first value that must be entered is the number of years of synthetic data to be generated. The rest of the information on the screen is optional. For precipitation, the user can elect to use the default normal mean monthly precipitation values provided by the HELP program or to enter normal mean monthly precipitation values to be used in generating the synthetic precipitation for that location. For temperature, the user has the option to use the default normal mean monthly temperature values provided by the HELP program or to enter normal mean monthly temperature values to be used in generating the synthetic temperature for that location. Users are encouraged to enter their own normal mean monthly values especially if the landfill is not located at the selected city. The program uses the normal mean monthly data to adjust the data generated by the synthetic weather generator. If the user decides not to use the default values, the program will transfer control to the normal mean monthly data option under the "User" heading. At this time the user must input values for January through December. A blank cell for a given month will be recorded as zero, and the user must be careful not to leave a cell without an entry. A zero entry, however, is a valid entry. For solar radiation the optional value is the latitude for the location. The default latitude of the selected city will be displayed, but the user is encouraged to enter the latitude of the actual landfill location to obtain better solar radiation values.

Create/Edit

If the user selects the ***create/edit option*** (*Customary or Metric Units*) for manually

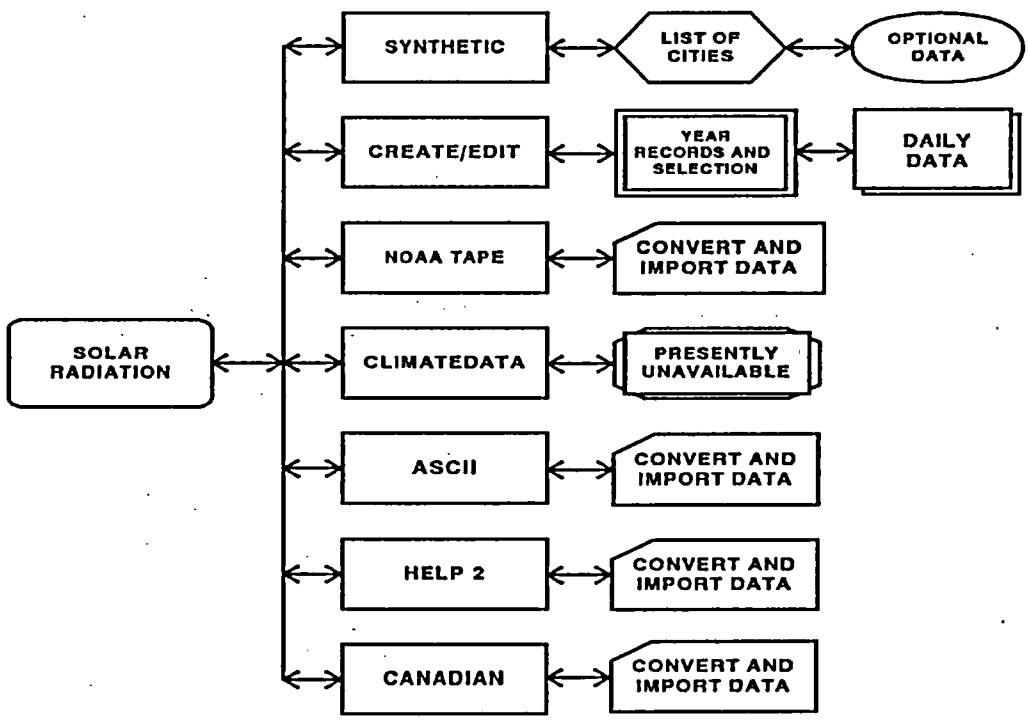

Figure 10. Solar Radiation Options

entering or editing precipitation, temperature and/or solar radiation data, the program prompts the user with a request to enter the city and state of the location and the units that will be used for entering the data manually. These requests appear on the same screen as "Precipitation, Temperature and Solar Radiation" screen and will be filled in with information when editing an existing data file. The user may press the ***Esc*** key to abandon the entry of this information and return to the selection of another weather data option. Once the location and units are specified, the program displays the yearly data screen.

Yearly Data Screen

This screen is like a spreadsheet that has four columns. Two of these columns are for the precipitation data, and one column each is for temperature and solar radiation. The first column is for the year for which the precipitation data is to be entered, and the second column is for total annual precipitation. The user cannot access the yearly total precipitation column since this total is computed by the program after the daily data for the year is entered. If the user reaches this screen from the precipitation option on the "Precipitation, Temperature, and Solar Radiation" screen, the user will only be able to move within the column under precipitation. Similarly, if the user reaches this screen from the temperature data option, then only movement in the temperature column is permitted, and analogously, for the solar radiation option.

To enter a new year of daily values, the user should move the cursor to a empty cell, type in the year and press ***Enter.*** The program will display the daily data screen on which the daily values are entered. The user can return to the yearly data screen by pressing ***F10*** to retain the data (to a temporary file) or by pressing ***Esc*** to abandon the created data.

The user can enter up to 100 years of daily data. The yearly data screen can only display 20 rows at a time. The user, however, can move the cursor to the bottom of the screen and then cursor down to move to the next row until the hundredth row is displayed. Similarly, the user can move the cursor upward to display the rows in the spreadsheet that are not shown on the screen, if any. To move down 20 rows, press ***Page Down***, and to move up 20 rows, press ***Page Up***. To reach the last row, press ***End***, and to go to the first row press ***Home***.

To edit an existing year of daily values, the user must first create and/or read weather data. If the data were previously saved, the user should specify the existing data file "Weather Data - File Editing" screen immediately after selecting the "Enter/Edit Weather Data" option from the main menu. The HELP model reads the data from the edit file and stores it in a temporary file. Upon entering the ***create/edit*** option, the program displays the list of years for precipitation, the total annual precipitation for each year, and a list of years for the temperature and solar radiation data. To edit, move the cursor to the year that is to be edited and press ***Enter.*** The program will display the daily data screen and

the user may type over any values that need to be edited. The operation of the yearly data spreadsheet and the daily data spreadsheet is the same when editing existing data or when creating new data.

After entering or editing years of daily weather data, the user can return to the "Precipitation, Temperature and Solar Radiation" screen to exercise other weather data options. To retain the newly created or edited years of daily weather data, the user should press ***F10*** from the yearly data screen; the program will then replace the existing temporary data file containing all of the years of data for that type of weather data. To lose the newly entered or edited daily data, the user should press ***F9*** or ***Esc***; the program will retain the previously existing temporary data file containing the values of that type of weather data prior to entering the ***create/edit*** option.

Daily Data Screen

Upon selecting or specifying a year from the yearly data screen, the program displays the daily data screen, a spreadsheet for entering daily data. This spreadsheet consists of 10 columns and 37 rows. The spreadsheet contains information on the file name, the year, month, and day. This information is displayed at the top of the spreadsheet. The day and month are continuously updated as the user moves from one cell to another. The first day is considered January 1, and the last day is December 31. The spreadsheet is divided into two parts, the first part being rows 1 through 19, and the second part, rows 20 through 37. The user can move the cursor to the bottom of the screen and cursor down to move to the next row until the 37th row is displayed. Similarly, the user can move the cursor upward to display any rows in the spreadsheet that are not shown. To move from the upper to the lower portions of the spreadsheet and vice versa, press ***Page Down*** and ***Page Up***, respectively. To reach the last cell in the spreadsheet, press ***End***, and to return to the first cell, press ***Home***.

The user should input values one day at a time without leaving empty cells between months. For example, the first month (January) will extend to the first cell (or column) in the fourth row. The values for the first day in February should start in column 2 of row 4; no empty cells are left between months. An empty cell is considered by the program to indicate a value of zero for that day. A zero is a valid entry. The program keeps track of leap years and adjusts the month and day at the top of the spreadsheet accordingly. Since there are 37 lines with each line containing 10 days of data, there will be empty cells at the end of line 37 in the spreadsheet. These cells are ignored by the program.

If the user decides to quit entering data in the daily spreadsheet and return to the yearly spreadsheet, the user should press the ***Esc*** key. By doing so, whatever data were entered on the daily data sheet will be lost; the previously existing data will be retained. To exit the daily spreadsheet and retain the data entered on that sheet, the user should press ***F10***. Note that the ***F10*** key will retain the data in a temporary file only and not

in any previously selected file. A separate temporary file is maintained for each year of daily data.

Once the user returns to the yearly weather sheet, more years can be entered or edited, and the daily values for these years can be input on the daily sheet in the same manner described above. After exiting the precipitation spreadsheet by pressing ***F10***, and upon returning to the yearly sheet, the annual total precipitation for that year is computed and displayed next to the year.

Editing Data on Yearly Data Screen

Besides selecting years for creating or editing daily data, the user has the options on the yearly data screen to select only a portion of a weather file for future use, to rearrange the years of data, to repeat the same year(s) of data for a longer simulation period or to insert years of data into an existing file. These options are performed using the functions to add (insert) a year above or below an existing year in the list of years, delete a year, move a year to a position above or below an existing year in the list of years, or copy a year to a position above or below an existing year in the list of years. The options are performed only on the type of data (precipitation, temperature or solar radiation) highlighted when the ***create/edit*** option was selected. This is done by using the following key combinations of functions:

Alt A adds/inserts a year (either new, being moved or being copied) above the highlighted year (where the cursor is positioned)

Alt B adds/inserts a year (either new, being moved or being copied) below the highlighted year (where the cursor is positioned)

Alt D deletes the highlighted year (where the cursor is positioned)

Alt M tags the highlighted year (where the cursor is positioned) to be moved to another location to be designated using the cursor and ***Alt A*** or ***Alt B***

Alt C tags the highlighted year (where the cursor is positioned) to be copied to another location to be designated using the cursor and ***Alt A*** or ***Alt B***

To add a new year directly above a certain year, for example above the year on line 29 (Line numbering is shown on the left edge of the screen.), the user should move the cursor to line 29, hold the ***Alt*** key down, and press ***A***. The result of this action is that a blank cell is inserted above line 29, and the program shifts the year on line 29 and all the years below it one line downward (i.e. year on line 29 moves to line 30, year on line 30 moves to line 31, etc.), and line 29 will be a blank line for the user to enter the value for

the new year.

To add a year directly below a certain year, for example below the year on line 5, the user should move the cursor to line 5, hold the *Alt* key down, and press *B*. The result of this action is that a blank cell is inserted below line 5, and the program shifts the year on line 6 and all the years below it one line downward (i.e. year on line 6 moves to line 7, year on line 7 moves to line 8, etc.), and line 6 will be a blank cell for the user to enter the value of the new year.

The *Alt D* combination causes the program to delete a year from the list of years. For example, to delete the year on line 15, the user should move the cursor to line 15, hold the *Alt* key down, and press *D*. The program will delete information on line 15 and will shift the years on lines 16 to 100 upward one line (i.e., year on line 16 moves to line 15, year on line 17 moves to line 16, etc.), and cell on line 100 becomes an empty cell. The user is cautioned that the deleted year cannot be recovered without quitting and losing all changes (*F9* or *Esc*). The original temporary file is replaced only when the changes are finally retained by pressing *F10* from the yearly data screen.

The copy command allows the user to place a year that is identical to another year on another line. For example, to copy the year on line 70 to line 5, move the cursor to line 70 and press the *Alt C* combination, then move the cursor to line 5 and press the *Alt A* combination. At this point, the user must specify a value for the new year; the value must be different from the value of any other year in the data set for that type of weather data. This action will cause the new value for the year to appear on line 5 but the daily values will be the same as those found for the year copied and previously found in line 70. (The user may obtain the same result after the *Alt C* combination by moving to line 4 and pressing the combination *Alt B*).

The move command allows the user to move one year from one location on the yearly data screen to another. For example, to move the year on line 32 above the year on line 56, move the cursor to line 32, press the *Alt M* combination, and move the cursor to line 56 and press the *Alt A* combination. This action will cause the year on line 32 to be deleted and be placed directly above the year on line 56. (The user may obtain the same result after the *Alt M* combination by moving to line 55 and pressing the combination *Alt B*).

The *Esc* key can be used to quit the move and copy functions (after pressing *Alt M* or *Alt C* and before pressing *Alt A* or *Alt B*. By editing the data as discussed above, the user is actually arranging the order of the precipitation data of the years. Actual rearranging of data in the data file, however, takes place only after the user presses *F10*.

NOAA Tape Data

This option allows the user to enter data to the HELP model from a NOAA data set

(*Customary Units Only*). If this option is selected, the user must enter the city and state for the site and the NOAA file name. For the precipitation and temperature options, the NOAA data file should contain daily Summary of Day data written in as-on-tape format. Note that for temperature data two file names are requested, one for the maximum temperature and the other for the minimum temperature. If the user has only a mean temperature data file, the mean temperature data file name should be entered for both maximum and minimum temperature data file names. For the solar radiation option the NOAA data file should contain hourly Surface Airways data written in as-on-tape format. Example NOAA data files are included with the HELP program -- PC49215A.PRN for precipitation, MX49215A.PRN for maximum temperature and MN49215A.PRN for minimum temperature. When entering the NOAA file name, the user should include the DOS path (if the file location is different than the default directory), file name and extension. The user can abandon the entry of this data by pressing *Esc*. Once valid information is entered, the program reads the data from the specified file and converts it to the HELP Version 3 format.

Climatedata™

This option allows the user to enter daily precipitation or temperature data to the HELP model from Climatedata™ (*Customary Units Only*). If this option is selected, the user must enter the city and state for the site and the Climatedata™ file name. Note that for temperature data, two file names are requested, one for the maximum temperature file and the other for the minimum temperature file. The Climatedata™ file should have been created by exporting or printing the CD-ROM data to an ASCII print file. This same format is used by data bases other than Climatedata™ and therefore these data bases can be converted using this same option. Example Climatedata™ files are included with the HELP program -- BIRM.PRC for precipitation, BIRM.MAX for maximum temperature and BIRM.MIN for minimum temperature. When entering the Climatedata™ file name, the user should include the DOS path (if the file location is different than the default directory), file name and extension. The user can abandon the entry of this data by pressing *Esc*. Once valid information is entered, the program reads the data from the specified file and converts it to the HELP Version 3 format.

ASCII Data

This option allows the user to enter daily weather data to the HELP model from ASCII data files (*Customary or Metric Units*). The ASCII data set is composed of lines of data whose values are separated by a blank(s), a comma or other non-numeric symbol. If this option is selected, the user must enter the city and state for the site, the units of the data in the ASCII files. The user can abandon the entry of this data by pressing *Esc*. Once valid information is entered, the program then asks for the file name and year of the ASCII data set, one year at a time. Each file should contain only one year of daily values for a particular type of data, either precipitation, mean temperature or solar radiation. Example ASCII data files are included with the HELP program -- RAIN.1 and RAIN.2 for precipitation, TEMP.1 and TEMP.2 for temperature and SOLAR.1 and

SOLAR.2 for solar radiation. When entering the ASCII data file name, the user should include the DOS path (if the file location is different than the default directory), file name and extension. In order to return from this option to the "Precipitation, Temperature, and Solar Radiation" screen, press *Esc.*

HELP 2

This option allows the user to enter weather data to the HELP model Version 3 from a data file used in the HELP model Version 2 (*Customary Units Only*). If this option is selected, the user must enter the city and state for the site and the HELP Version 2 data file name. Example HELP 2 data files are included with the HELP program -- ALA4 for precipitation, ALA7 for temperature and ALA13 for solar radiation. When entering the HELP 2 data file name, the user should include the DOS path (if the file location is different than the default directory), file name and extension. The user can abandon the entry of this data by pressing *Esc.* Once valid information is entered, the program reads the data from the specified file and converts it to the HELP Version 3 format.

Canadian

This option allows the user to enter weather data to the HELP model from a Canadian Climatological Data (Surface) file (*Metric Units Only*). If this option is selected, the user must enter the city and state for the site and the Canadian Climatological Data file name. The precipitation and mean temperature data files should contain daily values written in either compressed or uncompressed diskette format. The solar radiation data file should contain hourly global solar radiation values also written in either compressed or uncompressed diskette format. Example Canadian data files are included with the HELP program -- CAN4.DAT and CCAN4.DAT for precipitation, CAN7.DAT and CCAN7.DAT for temperature and CAN13.DAT and CCAN13.DAT for solar radiation. When entering the Canadian data file name, the user should include the DOS path (if the file location is different than the default directory), file name and extension. The user can abandon the entry of this data by pressing *Esc.* Once valid information is entered, the program reads the data from the specified file and converts it to the HELP Version 3 format.

4.5.4 Saving Weather Data

During the creation of the weather data explained above, the data are saved in temporary files. To save the data to permanent files, the user must press ***F10*** from the primary screens. Once the ***F10*** key is pressed, the program verifies that all the data have been entered. If any of the data is incomplete, the program displays a list of the problem areas. The user can return to the primary screens to complete the data or continue to save the incomplete data. After displaying the deficiencies, the program displays the "Weather Data - File Saving" screen. Here the user may save all or only some of the four weather types, or completely abandon the save option. The user should tag each type of data to

be saved by entering a "Y" in the "SAVE" column and those not to be saved by entering a "N" in the "SAVE" column. Default file names are displayed in appropriate locations on this screen; these are the same names as used in Version 2. At this time, the user may enter new file names for any or all of the four types of weather data. (See Section 4.5.1 for file naming convention used in HELP.) If the file already exists, the program will display "File Already Exists" after entering the name. After replacing all file names of interest, the user should press ***F10*** or ***Page Down*** to complete the saving to the requested file names. If files already exists for any of the file names as they would for the default names, the program will ask the user about overwriting each existing file. If the user answers "Y" for all of the files, the program will overwrite the files, complete the saving process and return to the main menu. If the user answers "N" for any file, the program will interrupt the saving, return to the "SAVE" column and change the tag to "N". The user can then change the tag back to "Y", rename the file, and restart the saving by pressing ***F10*** or ***Page Down***. The program provides other options listed on the "File Saving" screen to enable the user to return the weather data entry screens (***Page Up***) or to return to the main menu without saving the data (***F9***). The user must be cautioned that the ***F9*** option will cause all the data created (if any) to be lost. Figure 11 shows the available options.

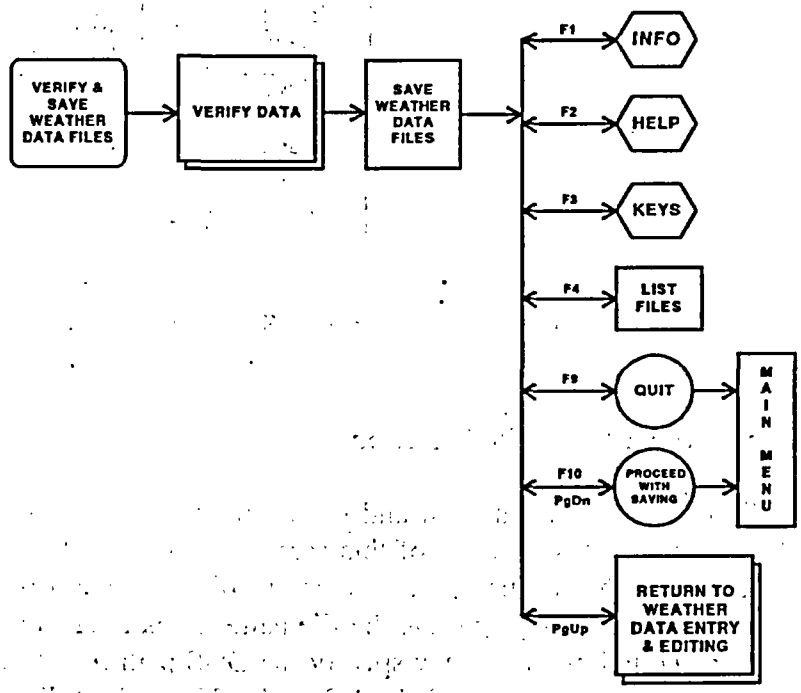

Figure 11. "Weather Data - File Saving" Screen Options

4.6 SOIL AND DESIGN DATA

This module is selected from the main menu by pressing 2, ***"Enter/Edit Soil and Design."*** While in this module, the user will be able to enter site information, a landfill profile, layer design data, characteristics of soils, geomembranes and other materials, and SCS runoff curve number information. The primary screens in this module are the "Soil and Design Data - File Editing" screen, "Landfill General Information" screen, three Landfill Profile Design and Layer Data screens, "Runoff Curve Number Information" screen, "Verification and Saving" screen and "Soil and Design Data - File Saving" screen. Several secondary screens may appear during the session depending on the action taken by the user. On-line help screens are always available for display by pressing ***F1*** or ***F2***. The individual primary screens and their secondary screens of this module are discussed below. Figure 12 shows a schematic of the soil and design data module.

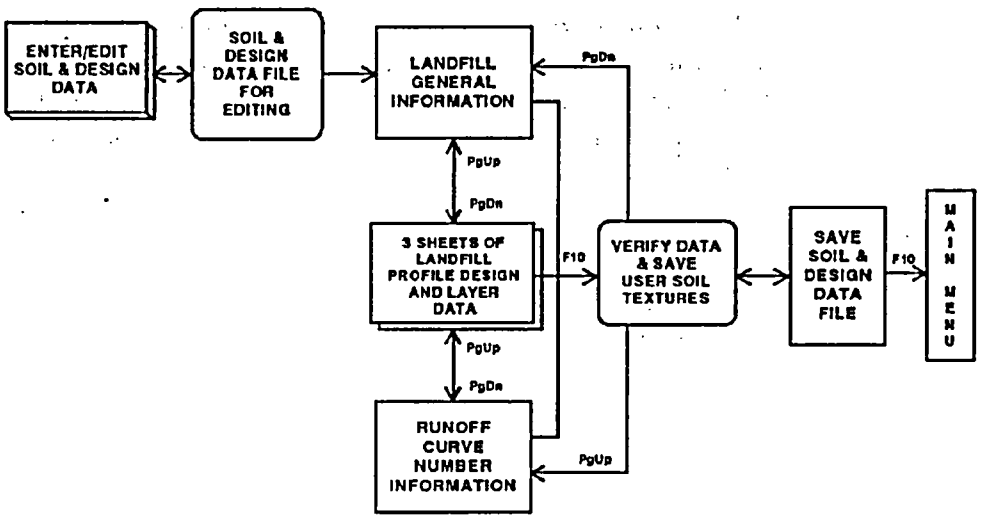

Figure 12. Schematic of Soil and Design Data Module

4.6.1 Soil and Design Data File Selection

The first screen in the soil and design module is the "Soil and Design Data - File Editing" screen. A schematic of this screen is shown in Figure 13. On this screen the user may enter the file name of an existing file to select a previously generated HELP Version 3 file for editing or leave the file name blank to create new data. When selecting a file to be edited, the user may specify the DOS path if different from the default drive and subdirectory, such as C:\HELP3\DATA. The default directory is initially displayed in the directory cell on the screen. If the user specifies a drive or a directory that does not exist, the program will display respectively "Invalid Drive" or "Invalid Directory" and replaces the content with the default directory. The soil and design data file may have any valid DOS name of up to 8 characters. If the user enters an illegal file name, the program displays "Bad File Name" and clears the file name. If the user specifies a file name that does not exist, the program displays "File Not Found" and clears the file name.

The program adds an extension of .D10 to the file name. As such, the user should not specify the extension in HELP Version 3 whenever entering a file name for editing or saving.

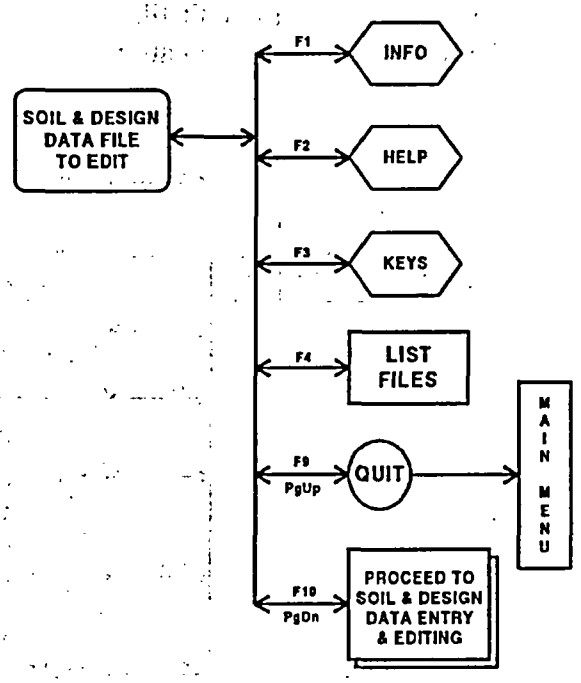

Figure 13. "Soil and Design Data - File Editing" Screen Options

As shown in Figure 13, the user may obtain a listing of all soil and design data files that reside on the directory currently specified in the directory cell by pressing ***F4***. Up to 120 data files can be displayed on the screen. The name of the current directory where these files are located is also displayed. To change to another directory, the user should enter the name of that directory in the column labeled DIRECTORY. To select a file from the list of displayed files, move the cursor to the file and select it by pressing ***Enter***. This transfers control back to the previous screen and the name of the file just selected will be displayed in the proper cell. The user can exit the list-of-files screen without selecting a file by pressing ***F4*** again or ***Esc***.

When ready to proceed to enter new data or edit existing data, the user should press ***Page Down*** or ***F10***. The program then reads the data file to be edited, if a file is specified, and proceeds to the "Landfill General Information" screen. If a new data set is to be created (file name left blank), the program initializes the soil and design data and then asks for the system of units to be used throughout the module (*Customary or Metric*). Proper units are displayed throughout the module for entries that require units.

4.6.2 Landfill General Information

The second input screen in the soil and design data module is the "Landfill General Information" screen. Figure 14 shows the screen and its branches as a schematic. By moving the cursor to the appropriate cell, the user can enter new information or edit the information that was read from the edit file. The first entry is the ***project title*** which is only used for identification of the simulation.

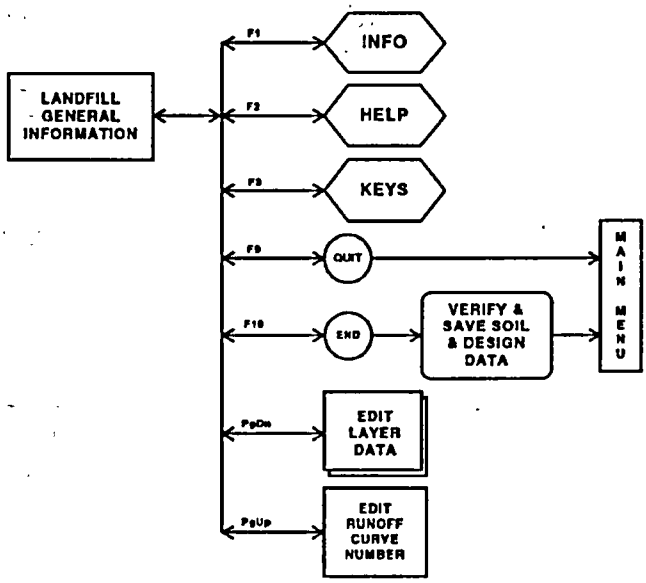

Figure 14. Schematic of "Landfill General Information" Screen

The second entry on this screen is the ***landfill area.*** The units of the area are displayed next to the input cell according to the system of units selected. The user should enter the area in acres for Customary units or in hectares for Metric units. The third entry is for the ***percent of area where runoff is possible.*** This variable specifies the portion of the area that is sloped in a manner that would permit drainage off the surface. The runoff estimates predicted by the model are equal to the computed runoff by the curve number method times this percent. The difference between the computed runoff and the actual runoff is added to the infiltration.

Next, the user must select the method of ***moisture content initialization***; that is whether or not the user wishes to specify the initial moisture storage. If the user answers "N" (no) to this question, the program assumes near steady-state values and then runs the first year of the simulation to improve the initialization to steady-state. The soil water contents at the end of this year of initialization are taken as the initial values for the simulation period. The program then runs the complete simulation, starting again at the beginning of the first year of weather data. The results for the initialization period are

not reported. However, if the user answers "Y" (yes), the user is requested to enter the ***amount of water or snow water on the surface*** in the units selected. Later, the user should enter the initial moisture content of each layer as explained in the next section.

4.6.3 Landfill Layer Data

The next step in the soil and design data module is to input the design specifications of the landfill profile, one layer at a time. Layer data are entered in three screens. These screens have a spreadsheet layout where each row represents a layer. Figure 15 shows the three spreadsheets and their associated screens. The first row of cells on the screens is the uppermost layer in the landfill. Each column of cells on the screens represents a variable or a property of the layer or its material. Variable names are listed in the first two rows of the screen, and the third row contains the units of that variable, if any. Every highlighted cell is associated with a highlighted property (heading of a column) and a highlighted layer number (row label). The user should enter the value of the specified property for the corresponding layer. All entries must obey certain rules which are discussed below.

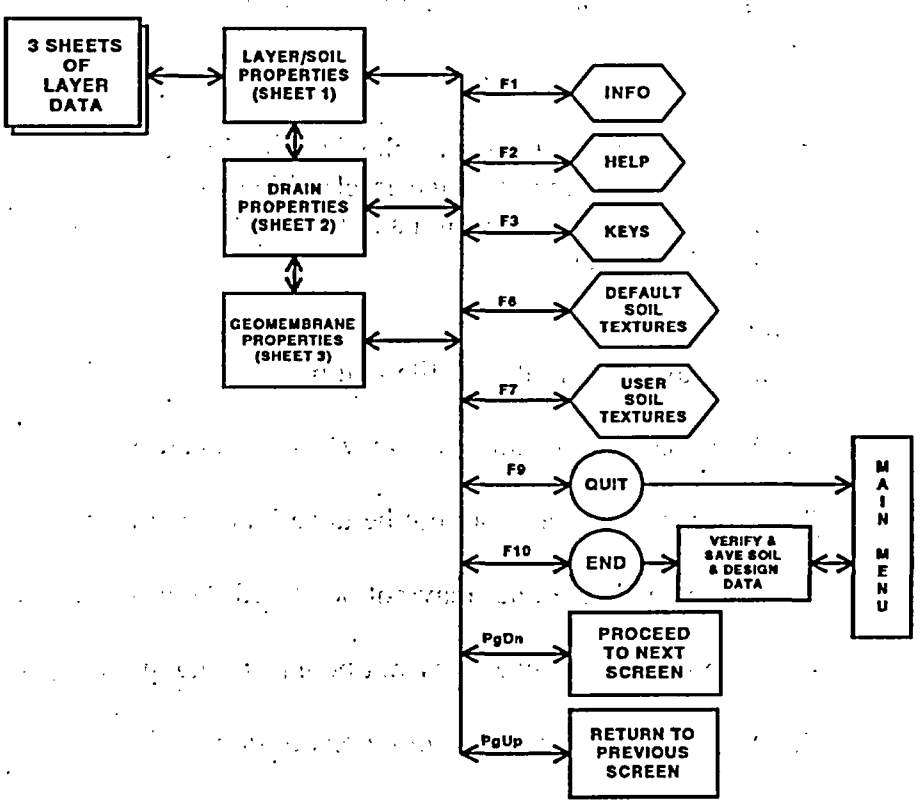

Figure 15. Schematic of Landfill Layer Data

Layer Type

The user should input ***layer type*** in the first column of the spreadsheet. The four layer types and their associated code numbers that the program recognizes are vertical percolation (1), lateral drainage (2), barrier soil liner (3), and geomembrane liner (4). These are defined as follows:

1. A layer of moderate to high permeability material that drains vertically primarily as unsaturated flow is classified as a ***vertical percolation layer*** as long as it is not underlain by a liner with a lateral drainage collection and removal system. The primary purpose of a vertical percolation layer is to provide moisture storage; as such, top soil layers and waste layers are often vertical percolation layers.

2. A layer of moderate to high permeability material that is underlain by a liner with a lateral drainage collection and removal system is classified as a ***lateral drainage layer***. The layer drains vertically primarily as unsaturated flow and laterally as a saturated flow.

3. A layer of low permeability soil designed to limit percolation/leakage is classified as a ***barrier soil liner***. The layer drains only vertically as a saturated flow.

4. A geomembrane (synthetic flexible membrane liner) designed to restrict vertical drainage and limit leakage is classified as a ***geomembrane liner***. Leakage is modeled as vapor diffusion and leakage through small manufacturing defects and installation flaws.

While the HELP program is quite flexible, there are some basic rules regarding the arrangement of layers in the profile that must be followed.

1. A vertical percolation layer may not be underlying a lateral drainage layer.

2. A barrier soil liner may not be underlying another barrier soil liner.

3. A geomembrane liner may not be placed directly between two barrier soil liners.

4. A geomembrane liner may not be underlying another geomembrane liner.

5. A barrier soil liner may not be placed directly between two geomembrane liners.

6. When a barrier soil liner or a geomembrane liner is not placed directly below the lowest drainage layer, all drainage layers below the lowest liner are treated as vertical percolation layers. Thus, no lateral drainage is computed for the bottom section of the landfill.

7. The top layer may not be a barrier soil liner.

8. The top layer may not be a geomembrane liner.

9. The profile can contain no more than a total of five barrier soil liners and geomembrane liners.

The program checks for rule violations only at the time the user saves the data. Therefore, to reduce the time involved in evaluating a landfill, the user is encouraged to design a proper layer sequence before saving the data.

In the second column, which has the heading "***Layer Thickness,***" the user should enter the thickness of each layer in the landfill profile even for the geomembrane liner, in inches or cm. The values must be greater than zero; a blank cell is taken as a value of zero. Again, during data verification the program checks for layer thickness of zero and issues a violation statement when the user tries to save the data.

In the third column, the user should enter the ***soil texture number*** of the soil that forms the layer. The 4 possible options for the user to enter soil texture numbers are:

1. Select from a list of default textures for 42 soils, wastes, geomembranes, geosynthetics and other materials.

2. Select from a library of user-defined textures that were previously saved and numbered by the user (up to 100 such textures are allowed).

3. Enter a new soil texture number that can be used again in this design and that can later be saved in the library of user defined textures (material properties must also be entered manually for this texture).

4. Leave the texture number blank and enter the material properties manually.

Default Soil/Material Textures

Default soil/material textures have numbers from 1 to 42 and are listed in Table 4. The user can either type the soil texture number or press ***F6*** to select a texture from the list of default textures. If the user enters a default soil/material texture number manually, the program automatically assigns the default values for ***porosity, field capacity, wilting point, and hydraulic conductivity*** to the layer. On the other hand, the user may press ***F6*** to obtain the list of soil textures on a separate screen. On the soil texture screen, the user can move the cursor to the desired texture or press ***Page Down*** to display the rest of the default soil textures. After cursoring to the desired texture, press ***Enter*** to select it. At this time, program control returns to layer spreadsheet screen and displays the selected soil texture number, along with the porosity, field capacity, wilting point, and hydraulic conductivity in appropriate cells. Notice that the only information available for the

default geomembrane liners is the hydraulic conductivity (liner vapor diffusivity). If the user changes any of the four soil properties obtained for a default soil/material texture, the program automatically resets the soil texture number to 0. The user can then assign the values a new soil texture number that is not used in either the list of default or previously saved user defined textures if the user wishes to save the material characteristics for future use.

As mentioned above, default soil/material textures are obtained by pressing ***F6*** and are available on all three screens. To move from one screen of default soil/material textures to another the user should press ***Page Up*** or ***Page Down***. To return to the layer spreadsheet without making a selection, press ***Esc***. A selection is made only by moving the cursor to the desired soil texture and pressing ***Enter***.

User-Defined Soil Texture

In Version 3 of the HELP model, the user has three options to specify material characteristics, in addition to selecting soil textures from the default list. One method is to enter all of the material characteristics manually without specifying a soil texture number. This method is used when the user does not wish to save these characteristics for use again in this simulation or future simulations. The second method, which allows the user to assign a new soil texture number to the manually entered values for the soil properties, is used when the same characteristics are to be used in future simulations and the characteristics are to be permanently saved in a library of user-defined textures. A library of up to 100 soil textures may be saved in a "user-defined soil texture" data file. The creation and addition of textures to this file are explained in Section 4.6.5 of this User's Guide. The third method is to select a user-defined texture that was previously saved in the library. If this library of user-defined soil textures exists, the user can display the list of available textures for selection by pressing ***F7***. Selecting a user-defined soil texture for a given layer is identical to that of selecting a default soil/material textures; the user should move the cursor to the desired soil texture and press ***Enter***. At this point, program control returns to the layer spreadsheet and displays soil texture values, porosity, field capacity, wilting point, and hydraulic conductivity of the selected soil in the layer (row) where ***F7*** was pressed. Also, in the same manner as in default soil/material textures, the user can simply type the number of the user-defined soil texture in "Soil Texture No." column of the first screen of the layer spreadsheets, and the program will automatically obtain the soil characteristics for that soil texture and place them in the proper location on the layer spreadsheet.

Whenever ***F7*** is pressed, control transfers to the user-defined soil textures. To move among pages of soil textures press ***Page Up*** and ***Page Down***. To make a selection, press ***Enter***, and to return to the layer spreadsheet without making a selection, press ***Esc***.

The values entered for the moisture storage parameters in columns 4 through 7 of the first screen of layer spreadsheets are interrelated. In column 4 the ***porosity*** must be greater than zero but less than 1. In column 5 the ***field capacity*** must be between zero

and 1 but must be smaller than the porosity. In column 6 the ***wilting point*** must be greater than zero but less than the field capacity. In column 7 the ***initial moisture content*** must be greater than or equal to the wilting point and less than or equal to the porosity. If the user had indicated on the "Landfill General Information" screen that the program should specify initial moisture content for the soil layers, the program will ignore all input in column 7. As such, the user does not need to enter data in this column. On the other hand, if the user had indicated that the user wishes to specify the initial moisture content, these values must be entered manually. An empty cell is interpreted as zero for initial moisture, violating the rules. If the layer is a liner, the program during execution automatically sets the initial water content equal to the porosity of the layer. The program will detect violations of these values and will report them to the user during verifications when the data is to be saved to a file.

The second screen of layer spreadsheets can be obtained by pressing ***Page Down***. On this sheet the user will notice that the layer type is already appearing. In the first column of cells the ***saturated hydraulic conductivity*** must be specified in the appropriate units (cm/sec). If the soil texture selected was a default soil/material texture or a user-defined soil texture, the saturated hydraulic conductivity will be displayed in this column. Remember that changing the saturated hydraulic conductivity causes the soil texture number on the previous screen to revert to zero in the same manner as changing any of the other material characteristics (porosity, field capacity or wilting point).

Drainage Layer Design

Information on lateral drainage layer design must be entered manually for each lateral drainage layer directly above the liner regardless of the method used to enter soil textures. The required information is the drainage length, drainage layer slope, recirculation percentage and recirculation destination. These parameters are found in the second through fifth column of cells on the second spreadsheet screen of layer data. These columns are used only for the lateral drainage layers directly above the liner; data placed in rows for other layers will be ignored during execution. The second column of cells on this second screen of layer data is for entering the ***maximum drainage length*** of lateral drainage layers, which is the length of the horizontal projection of the flow path down the slope of a liner to the water/leachate collection system. This length must be greater than zero. In third column of cells the user should enter the ***drain slope*** in percent. This slope is the maximum gradient of the surface of the liner at the base of the lateral drainage layer; this is the slope along the flow path.

In Version 3, the HELP program allows ***leachate/drainage recirculation*** to be simulated. The amount of leachate/lateral drainage to be recirculated from a given layer should be entered as a percent of the layer's drainage in the fourth column of cells. The layer to which this leachate drainage should be recirculated should be entered on the same row in the fifth column of cells. The value entered is the number of the layer receiving recirculation. Layer numbers are those numbers displayed on the left side of the screen. These numbers are 1 through 20 and refer to the order of the layers in the profile. The

HELP model does not allow leachate recirculation to a liner.

Version 3 of the HELP model also allows the user to specify ***subsurface inflow*** into the landfill from a groundwater source. The amount of subsurface inflow into each layer should be entered in the last column of the second spreadsheet of layer data and is considered to be a steady flow rate into the landfill at the layer where the inflow value is entered. If subsurface inflow is specified for the bottom layer, the program will assume no leakage through the bottom of the landfill. For most landfills, the inflows will be zero and this column can be left blank.

After entering the necessary values in the second spreadsheet screen of layer data, the user should press ***Page Down*** to go to the third and last screen of layer data. Pressing ***Page Up*** will return to the first spreadsheet of layer data, allowing the user to edit the previously entered values. Again, on the third spreadsheet screen, the layer type of all layers in the profile are displayed to aid in positioning data on the screen.

Geomembrane Liner Design

All of the entries on third screen of layer data pertain to geomembrane liner properties such as ***geomembrane liner pinhole density, geomembrane liner installation defect density, geomembrane liner placement quality,*** and associated ***geotextile transmissivity*** (if present). Values must be entered for each geomembrane liner (layer type 4) in the profile. Guidance on estimating the pinhole and installation defect density as well as definitions for these parameters is provided in Section 3. The placement quality options are also described in Section 3 and are presented below. The geotextile transmissivity should be specified only when a placement quality of 6 is used.

In the third column of cells the user should input the geomembrane liner placement quality. The HELP program recognizes the following six types of placement quality.

1. Perfect contact
2. Excellent contact
3. Good field placement
4. Poor field placement
5. Bad contact -- worst case
6. Geotextile separating geomembrane liner and controlling soil layer

Typically, placement quality 6 would not be used with a geosynthetic clay liner (GCL) despite the presence of a geotextile since, upon wetting, the clay extrudes through the geotextile and provides intimate contact with the geomembrane.

After completing input for one layer, the user can go back to the first spreadsheet and enter information for other layers. ***Page Up*** and ***Page Down*** are used to move backward and forward between spreadsheets. The user may also input values on one spreadsheet completely filling it, and move on to the next spreadsheet filling in the information for the layers entered in the first spreadsheet and so on. No blank rows be left in the spreadsheet between layers; however, if the user does leave some blank lines, the program will not save these as layers.

Layer Editing

While entering or editing the properties of the layers in the landfill defined in the three spreadsheets of layer data, the user has the option to add a layer to the profile, delete a layer, move a layer to another location in the profile, or copy a layer to another location. When using these layer editing functions, the program operates simultaneously on all three screens of layer data. This is done by using the following key combinations:

Alt A adds/inserts a layer (either new, being moved or being copied) above the highlighted layer (where the cursor is positioned)

Alt B adds/inserts a layer (either new, being moved or being copied) below the highlighted layer (where the cursor is positioned)

Alt D deletes the highlighted layer (where the cursor is positioned)

Alt M tags the highlighted layer (where the cursor is positioned) to be moved to another location to be designated using the cursor and ***Alt A*** or ***Alt B***

Alt C tags the highlighted layer (where the cursor is positioned) to be copied to another location to be designated using the cursor and ***Alt A*** or ***Alt B***

To add a new layer directly above a certain layer, for example above the layer on line 6 (shown on the left edge of the screen), the user should move the cursor to line 6, hold the ***Alt*** key down, and press ***A***. The result of this action is that a blank line is inserted above the layer that was at line 6, and the program shifts the layer on line 6 and all the layers below it one line downward (i.e. layer on line 6 moves to line 7, layer on line 7 moves to line 8, etc.), and line 6 will be a blank line for the user to enter the values for the new layer.

To add a layer right below a certain layer, for example below the layer on line 5, the user should move the cursor to line 5, hold the ***Alt*** key down, and press ***B***. The result of this action is that a blank line is inserted below line 5, and the program shifts the layer on line 6 and all the layers below it one line downward (i.e. layer on line 6 moves to line 7, layer on line 7 moves to line 8, etc.), and line 6 will be a blank cell for the user to enter the value of the new layer.

The *Alt D* combination causes the program to delete a layer from the list of layers. For example, to delete the layer on line 3, the user should move the cursor to line 3, hold the *Alt* key down and press *D*. The program will delete all information on line 3 and will shift the layers on lines 4 to 20 upward one line (i.e., layer on line 4 moves to line 3, layer on line 5 moves to line 4, etc.), and line 20 becomes a blank line. The user is cautioned that the deleted layer cannot be recovered without quitting and losing all changes (*F9* or *Esc*).

The copy command allows the user to place a layer that is identical to another layer on another line. For example, to copy the layer on line 7 to line 2, move the cursor to line 7 and press the *Alt C* combination, then move the cursor to line 2 and press the *Alt A* combination. This action will cause the program to insert a layer with values the same as those formerly found at line 7 above the layer formerly found at line 2. The layers formerly at and below line 2 will be moved downward one line. (The user may obtain the same result after the *Alt C* combination by moving to line 1 and pressing the combination *Alt B*).

The move command allows the user to move a layer from one row on the screens of layer data to another row. For example, to move the layer on line 3 above the layer on line 6, move the cursor to line 3, press the *Alt M* combination, and move the cursor to line 6 and press the *Alt A* combination. This action will cause the layer on line 3 to be deleted and be placed directly above the layer on line 6. This will cause line 4 to move up one line to line 3, line 5 to move to line 4 and line 3 to move to line 5; the other lines will be unchanged. (The user may obtain the same result after the *Alt M* combination by moving to line 5 and pressing the combination *Alt B*).

The *Esc* key can be used to quit the move and copy functions (after pressing *Alt M* or *Alt C* and before pressing *Alt A* or *Alt B*). By editing the data as discussed above, the user may arrange the order of the layers and run the model to test several possible configurations.

If the user has 20 lines completely filled with layers and then decides to add or copy a layer, the layer that is already in line 20 will disappear and cannot be recovered. Therefore, care must be taken not to add layers that will cause the loss of the layers at the bottom of the spreadsheet.

When all the layers of the profile are entered, press ***Page Down*** from the third layer spreadsheet to proceed with the rest of the soil and design data entry. Pressing ***Page Up*** from the first layer spreadsheet passes control to the "Landfill General Information" screen.

4.6.4 Runoff Curve Number

The "Runoff Curve Number Information" screen may be reached from the third layer spreadsheet by pressing ***Page Down***, or from the "Landfill General Information" Screen

by pressing *Page Up*. A schematic of the options associated with the "Runoff Curve Number Information" screen is shown in Figure 16. This screen is composed of three options that can be used to specify the runoff curve number. The first option is to use an ***user-specified curve number*** that the HELP model will use without modification. The second option is to request the HELP model to ***modify a user-specified curve number*** according to the surface slope and surface slope length. In the third option the user requests a ***HELP model computed runoff curve number*** based on surface slope, slope length, soil texture of the top layer in the landfill profile, and vegetation. To select one of these three options, the user should move the cursor to the desired option and press *Enter*. This action will cause the program to transfer control down to the box for the option selected. For each option, the user must input all required information. Although the user can move from one box to the other (use *Tab* and *Shift Tab* keys), care should be taken to insure that the desired method is the one that will be used by HELP. The HELP model uses that option in which data was last entered; this option is marked by a small arrow in front of the option.

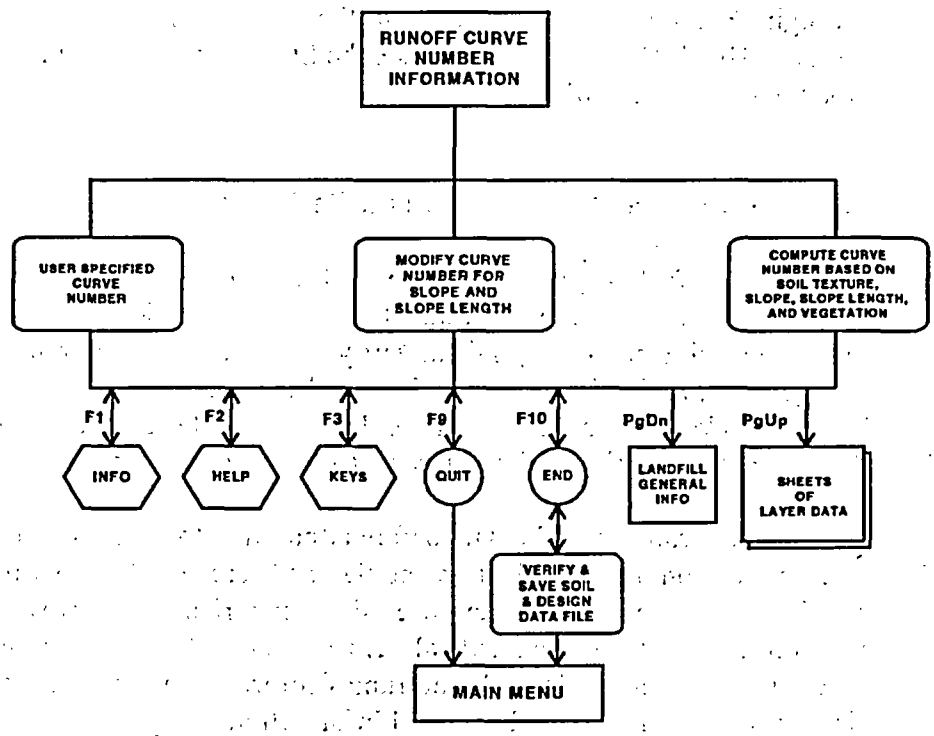

Figure 16. Schematic of "Runoff Curve Number Information" Screen Options

The user should refer to the HELP model documentation for Version 3 for the techniques used in the computation of the curve number based on slope and slope length. The value of the slope must be input in percent, and slope length must be input in the units indicated. If the top layer in the landfill is obtained from the default soil/material

textures, the soil texture number for that layer will be displayed in the appropriate cell on the screen. The user can solicit help on the ***vegetation cover*** by pressing the ***F2*** key. The only valid entries for the vegetation are 1 through 5, according to the following:

1. Bare ground
2. Poor stand of grass
3. Fair stand of grass
4. Good stand of grass
5. Excellent stand of grass

If the user selects the option that requires the HELP model to compute the curve number, the program first calculates the SCS runoff curve number for landfills with mild surface slopes (2 to 5 percent) based on the vegetation type and the soil texture on the top layer if one of the default soil/material textures is selected (soil texture types 1 through 18, 20 and 22 through 29) in the same manner as Version 2 (Schroeder et al., 1988b). HELP Version 3 then adjusts the SCS runoff curve number based on the surface slope and the length of the slope.

4.6.5 Verifying and Saving Soil and Design Data

Pressing ***F10*** anywhere in the soil and design option transfers control to the "Verification and Saving" screen. This screen provides the user with several options: verify landfill general design data, verify soil layer/geomembrane properties, verify layer arrangement, review/save user-defined soil textures, and save soil and design data. The user can select any of these options by moving the cursor to the option and pressing ***Enter***. Figure 17 shows the verify and save soil and design data options.

The user can verify the data before attempting to save the data by exercising the first three options on the "Verification and Saving" screen. These options are available mainly for the convenience of the new user since experienced users will be familiar with data requirements and the data will always be verified before saving. To check the data entered on the general landfill and runoff information screens, the user should select the first option, "Verify Landfill General Information Design Data." If there are no violations or warnings, the program will write "OK" to the right of the option; otherwise the program will list the problems and then write "BAD" to the right of the option.

The user can check the layer descriptions (the values on a row of the third screens

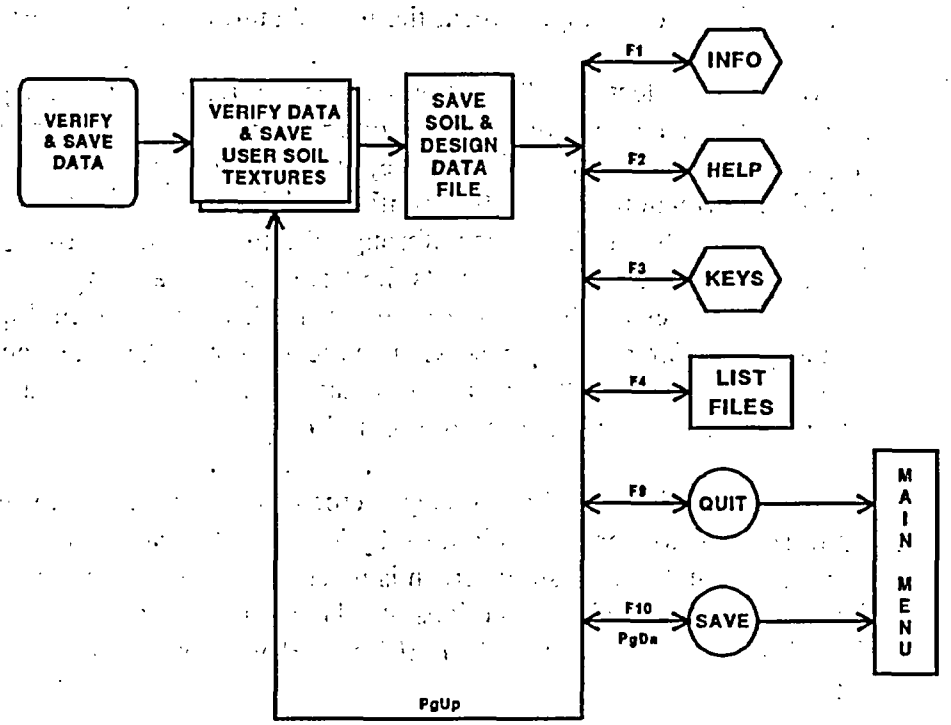

Figure 17. Verify and Save Soil and Design Data Options

of layer data) by selecting the "Verify Soil Layer/Geomembrane Properties" option. The program will examine each row for completeness for the type of layer described; for example, the program will insure that a placement quality was entered for all geomembrane liners (layer type 4). It will also check for the appropriateness of the values; for example, it will insure that the porosity is greater than the field capacity. If there are no violations or warnings, the program will write "OK" to the right of the option; otherwise the program will list the problems and then write "BAD" to the right of the option. Similarly, the user can check for violations in the ordering of the layers from top to bottom based on the layer types specified by selecting the "Verify Layer Arrangement" option. This option will check the nine rules for ordering of layers; for example, the program will insure that the top layer is not a liner. This option operates in the same manner as the verification options.

Another available option on this screen is to review the user defined soil textures that were used in the landfill profile for inclusion in or deletion from the library of user defined soil textures. Upon selecting this option, the program lists all of the non-zero user-defined soil textures used in the profile and allows the user to enter or edit a name to describe the material in the user soil library. Then after entering the names or labels, the user should tag all of the soil textures to be included in the library with a "Y" in the column of cells under the "SAVE" heading. Similarly, the user should tag all of the soil textures to be deleted from or not included in the library with a "N" in the column of cells under the "SAVE" heading. To complete the additions and deletions to the library, the user should press ***F10***; to cancel the additions and deletions and return to the

"Verification and Saving" screen, the user should press *Esc* or *F9*.

If the user selects the "Save Soil and Design Data" option, the program automatically checks for possible violation of rules or errors in the soil and design data. This checking encompasses verification of presence, arrangement and values entered for the general landfill information, the landfill profile and layer data, and the runoff curve number information. The program scans through the three landfill profile spreadsheets of layer data one layer at a time and reports the errors as they are encountered. If any violations or inconsistencies are found, the program displays them on multiple screens. The user should press *Enter* or *Page Down* to proceed through the screens and reach the "File Saving" screen where the data can be saved in a file. If the user wishes to return to "Verification and Saving" screen, press *Esc*.

Upon reaching the "File Saving" screen, the user can return to the verification and input screens to correct violations by editing the data. To return, press *Page Up* successively until the desired screen is reached. On the other hand, the user can still save the data now and make corrections at a later time if there were violations. However, it should not be expected that the HELP model will provide meaningful answers for such data.

Soil and design data are saved in a file specified on the "Soil and Design Data - File Saving" screen. The program displays the default file name, DATA10, for saving in the default directory. DATA10 is the same name for the soil and design data as used in Version 2 except that Version 3 adds an extension of .D10 to the specified soil and design data file name. To save the data, the user should enter "Y" in the "Save" column. Then, the user should specify the directory in which to save the file. If the directory cannot be found, the program responds "Invalid Directory" and replaces it with the default directory. After the directory, the user should enter the file name (no extension or period). If the file already exists, the program will display "File Already Exists." After entering the file name, the user should press *F10* or *Page Down* to complete the saving to the requested file name. If the file already exists as the default file would, the program will ask whether the user wishes to have the existing file overwritten. If the user answers "Y", the program will overwrite the file, complete the saving process and return to the main menu. If the user answers "N", the program will interrupt the saving, return to the "SAVE" column and change the tag to "N". The user can then change the tag back to "Y", rename the file, and restart the saving by pressing *F10* or *Page Down*. The program provides other options listed on the "File Saving" screen to provide the means for the user to display a directory of existing soil and design data files (*F4*), to return to the data entry screens (*Page Up*) or to return to the main menu without saving the data (*F9*). The user must be cautioned that the *F9* option will cause all the data created (if any) to be lost. Figure 17 shows the available options.

4.7 EXECUTING THE SIMULATION

Option 3 on the main menu is "Execute Simulation". This option is composed of two primary screens: "Execution Files - File Management" screen and "Output Selection" screen and is shown schematically in Figure 18.

Execution Files

This screen is used to define the weather and soil and design data files that contain the data to be used in the HELP model simulation. Six files must be specified to run HELP model. The input data files required are a precipitation data file, a temperature data file, a solar radiation data file, an evapotranspiration data file, and a soil and design data file; and for output, the HELP model requires one file on which the results are to be written.

The user must enter the file names without extension since the HELP model recognizes the following extensions for the various types of files:

.D4 for precipitation data

.D7 for temperature data

.D11 for evapotranspiration data

.D13 for solar radiation data

.D10 for soil and design data

.OUT for the output

When the program initially displays the "Execution Files - File Management" screen, the program lists the default directory name in each cell in the directory column and the file names of each type of data that were used in the last simulation. The user should enter the directory, if different than the default directory, for each type of file. If an invalid directory is entered, the program displays the message "Invalid Directory" and replaces the directory with the default directory. If user enters a file name that could not be found on the specified directory, then the program displays the message "File Not Found" and erases the file name.

As shown in Figure 18, the user may obtain a list of all files that reside on the current directory by pressing ***F4***. When the user presses ***F4***, the program obtains a directory of all files that pertain to the type of file at the cell where ***F4*** was pressed. For example, if ***F4*** was pressed from the temperature file cell, the program will display the list of files with extension D7 that reside on the current directory displayed in temperature file row. Up to 120 data files for any file type can be displayed on a separate screen. The name of the current directory where these files are located is also displayed. The user can obtain the list of data files with the same extension that are available in another valid

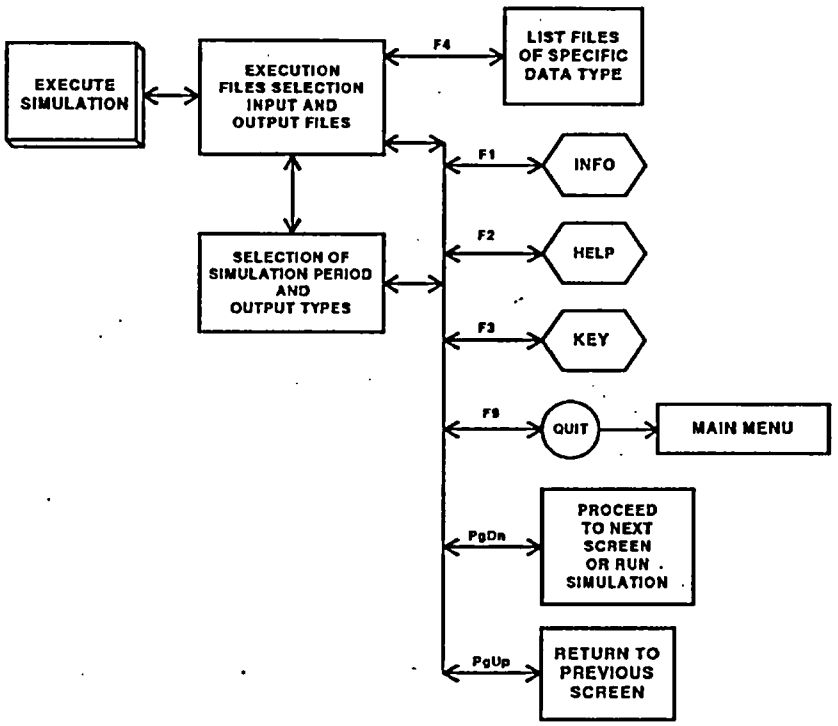

Figure 18. Schematic of "Execute Simulation" Option

directory by entering the name of that directory in the column labeled DIRECTORY and on the same row as the file type of interest.

To select a file from the list of displayed files, move the cursor to the file and select it by pressing ***Enter***. This transfers control back to the previous screen and the name of the file just selected will be displayed in the proper cell. The user can exit the list-of-files screen without selecting a file by pressing the ***Esc*** key.

Once file names have been selected, the user can proceed to the next screen of the execution module by pressing ***Page Down*** or ***F10***. If the output file already exists, the user is prompted with a warning indicating that this file already exists. The program then asks whether the file should be overwritten. If the user answers "N", the program moves the cursor to the output file name cell so that the user can enter a new file name. If the user answers "Y", the program proceeds to the "Output Selection" screen. Before displaying the next screen, the program reads the weather data files to determine the maximum allowable simulation period.

Output Selection

On this screen, the user selects the units of the HELP model output, the number of years to simulate, and the output frequency. The user may use a maximum of 100 years of simulation provided that weather data are available for that many years. If the weather

data in the selected files have a different number of years, the HELP model allows the simulation period to be no larger than the minimum number of years available in any of the daily weather data files. If the simulation period selected is smaller than the maximum allowable period, the program will use the years of weather data starting at the top of the files.

The rest of the information available on this screen is for selecting the type of optional output desired (daily, monthly or annual). The user may select any, all or none of the available options. The program will always write the summary output to the output file as well as a description of the input data. In order to select additional or different output frequencies, move the cursor to the desired output frequency and type "Y". Once all execution files and output frequency data are selected, the user should press ***Page Down*** or ***F10*** to start the simulation. To move back to the "Execution Files" screen, press ***Page Up***.

4.8 VIEWING RESULTS

Option 4 on the main menu is to view the results of execution. This option is used to browse through the output file before printing. Figure 19 is a schematic of this option. The program displays the "View Results" screen. The user should enter the desired directory and file name. The file name can be selected from a list of files by pressing ***F4***. After selecting the file, press ***Page Down*** or ***F10*** to display the selected file. The viewing function uses the LIST program written by Vernon D. Buerg and instructions on its use are available on screen by typing ***?*** or ***F1***. To display other types of files, first enter the extension of the file of interest, then the directory and the file name. To return to the main menu, press ***Page Down*** or ***F10***.

4.9 PRINTING RESULTS

Option 5 on the main menu is used to print the output file. Figure 20 is a schematic of this option. The program displays the "Print Results" screen. The user should enter the desired directory and file name. The file name can be selected from a list of files by pressing ***F4***. After selecting the file, press ***Page Down*** or ***F10*** to print the selected file. The print function uses the DOS PRINT command and instructions on its use are available in a DOS manual. The output file is 80 characters wide for all output options except daily output, which can be up to 132 characters wide. When printing output with daily results, it may be necessary to select a compressed font on your printer before printing to avoid wrapping or loss of output.

To print other types of files, first enter the extension of the file of interest, then the directory and the file name. To return to the main menu, press ***Page Down*** or ***F10***. Alternatively, the output file or any data file, which are ASCII text files, could be imported into other software such as word processors and printed in the format desired.

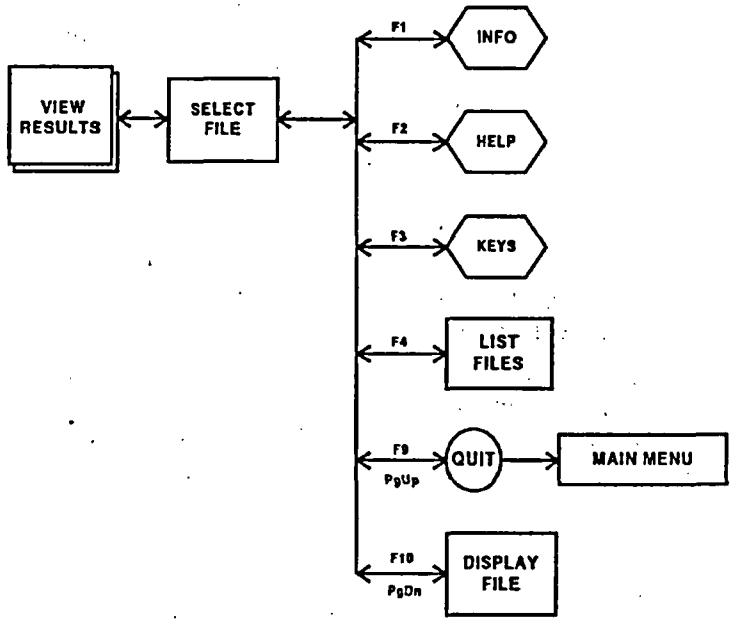

Figure 19. Schematic of "View Results" Option

Similarly, the output, in total or part, can be printed within the Viewing Option using the LIST program and blocking sections to be printed.

4.10 DISPLAYING GUIDANCE

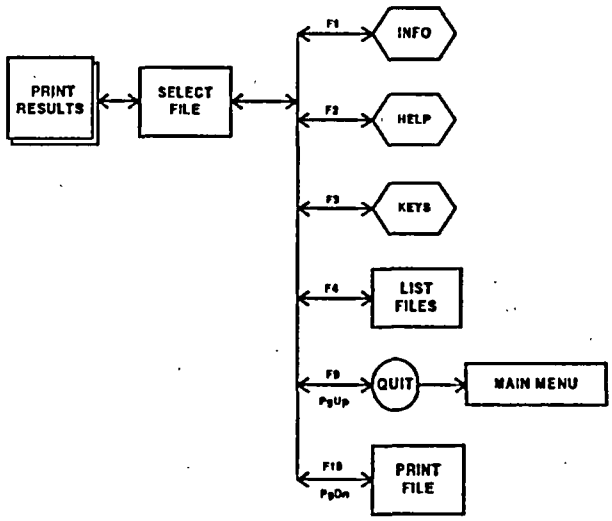

Figure 20. Schematic of "Print Results" Option

On-line help is provided throughout the program. However, option 6 on the main menu gives an overview of the HELP program, as well as, general criteria for landfill design and guidance on using the model. Most of this user guide is displayed in this option and the guidance refers to figures and tables in this guide. In addition, the on-line guidance uses the same section numbering as this guide.

4.11 QUITTING HELP

Option 7 on the main menu is to quit the HELP program and return to DOS.

REFERENCES

Arnold, J. G., Williams, J. R., Nicks, A. D., and Sammons, N. B. (1989). "SWRRB, A basin scale simulation model for soil and water resources management," Texas A&M University Press, College Station, TX. 142 pp.

Breazeale, E., and McGeorge, W. T. (1949). "A new technic for determining wilting percentage of soil," *Soil Science* 68, 371-374.

Brooks, R. H., and Corey, A. T. (1964). "Hydraulic properties of porous media," *Hydrology Papers* (3), Colorado State University, Fort Collins, CO. 27 pp.

England, C. B. (1970). "Land capability: A hydrologic response unit in agricultural watersheds," ARS 41-172, USDA Agricultural Research Service. 12 pp.

Harpur, W. A., Wilson-Fahmy, R. F., and Koerner, R. M. (1993). "Evaluation of the contact between geosynthetic clay liners and geomembranes in terms of transmissivity," *Proceeedings of GRI Seminar on Geosynthetic Liner Systems*, Geosynthetic Research Institute, Drexel University, Philadelphia, PA. 143-154.

Knisel, W. J., Jr., Editor. (1980). "CREAMS, A field scale model for chemicals, runoff, and erosion from agricultural management systems, volumes I, II and III." USDA-SEA, Conservation Research Report 26. 643 pp.

Lutton, R. J., Regan, G. L., and Jones, L. W. (1979). "Design and construction of covers for soil waste landfills," EPA-600/2-79-165, US Environmental Protection Agency, Cincinnati, OH. 249 pp.

National Oceanic and Atmospheric Administration. (1974). *Climatic atlas of the United States.* US Department of Commerce, Environmental Science Services Administration, Nation Climatic Center, Ashville, NC. 80 pp.

Perrier, E. R., and Gibson, A. C. (1980). "Hydrologic simulation on solid waste disposal sites," EPA-SW-868, US Environmental Protection Agency, Cincinnati, OH. 111 pp.

Rawls, W. J., Brakensiek, D. L., and Saxton, K. E. (1982). "Estimation of soil water properties," *Transactions of the American Society of Agricultural Engineers* 25(5), 1316-1320.

Richardson, C. W., and Wright, D. A. (1984). "WGEN: A model for generating daily weather variables," ARS-8, USDA Agricultural Research Service. 83 pp.

Ruffner, J. A. (1985). *Climates of the states, National Oceanic and Atmospheric*

Administration narrative summaries, tables, and maps for each state, volume 1 Alabama - New Mexico and volume 2 New York - Wyoming and territories. Gale Research Company, Detroit, MI. 758 pp. and 1572 pp.

Schroeder, P. R., and Gibson, A. C. (1982). "Supporting documentation for the hydrologic simulation model for estimating percolation at solid waste disposal sites (HSSWDS)," Draft Report, US Environmental Protection Agency, Cincinnati, OH. 153 pp.

Schroeder, P. R., Gibson, A. C., and Smolen, M. D. (1984). "The hydrologic evaluation of landfill performance (HELP) model, volume II, documentation for version 1," EPA/530-SW-84-010, US Environmental Protection Agency, Cincinnati, OH. 256 pp.

Schroeder, P. R., Peyton, R. L., McEnroe, B. M., and Sjostrom, J. W. (1988). "The hydrologic evaluation of landfill performance (HELP) model: Volume III. User's guide for version 2," Internal Working Document EL-92-1, Report 1, US Army Engineer Waterways Experiment Station, Vicksburg, MS. 87 pp.

Schroeder, P. R., McEnroe, B. M., Peyton, R. L., and Sjostrom, J. W. (1988). "The hydrologic evaluation of landfill performance (HELP) model: Volume IV. Documentation for version 2," Internal Working Document EL-92-1, Report 2, US Army Engineer Waterways Experiment Station, Vicksburg, MS. 72 pp.

Schroeder, P. R., Dozier, T. S., Zappi, P. A., McEnroe, B. M., Sjostrom, J.W., and Peyton, R.L. (1994). "The hydrologic evaluation of landfill performance (HELP) model: Engineering documentation for version 3," EPA/600/8-94/xxx, US Environmental Protection Agency, Cincinnati, OH. 105 pp.

USDA, Soil Conservation Service. (1985). "Chapter 9, hydrologic soil-cover complexes." *National engineering handbook, section 4, hydrology.* US Government Printing Office, Washington, D.C. 11 pp.

BIBLIOGRAPHY

Darilek, G. T., Laine, D. L., and Parra, J. O. (1989). "The electrical leak location method geomembrane liners: Development and applications." *Geosynthetics '89 Conference Proceedings*. San Diego, CA, 456-466.

Giroud, J. P., and Bonaparte, R. (1989). "Leakage through liners constructed with geomembranes -- part I. Geomembrane liners," *Geotextiles and Geomembranes* 8(1), 27-67.

Giroud, J. P., and Bonaparte, R. (1989). "Leakage through liners constructed with geomembranes -- part II. Composite liners," *Geotextiles and Geomembranes* 8(2), 71-111.

Giroud, J. P., Khatami, A., and Badu-Tweneboah, K. (1989). "Evaluation of the rate of leakage through composite liners," *Geotextiles and Geomembranes* 8(4), 337-340.

McEnroe, B. M., and Schroeder, P. R. (1988). "Leachate collection in landfills: Steady case," *Journal of the Environmental Engineering Division* 114(5), 1052-1062.

Oweis, I. S., Smith, D. A., Ellwood, R. B., and Greene, D. S. (1990). "Hydraulic characteristics of municipal refuse," *Journal of Geotechnical Engineering* 116(4), 539-553.

US Environmental Protection Agency. (1985). "Covers for uncontrolled hazardous waste sites," EPA/540/2-85/002, Hazardous Waste Engineering Research Laboratory, Cincinnati, OH. 529 pp.

US Environmental Protection Agency. (1988). "Guide to technical resources for the design of land disposal facilities," EPA/625/6-88/018, Risk Reduction Engineering Laboratory, Cincinnati, OH. 63 pp.

US Environmental Protection Agency. (1989). "Technical guidance document: Final covers for hazardous waste landfills and surface impoundments," EPA/530-SW-89-047, Office of Solid Waste and Emergency Response, Washington, D.C. 39 pp.

APPENDIX A

CALCULATING SOIL, WASTE AND MATERIAL PROPERTIES

A.1 BACKGROUND

The HELP program requires values for the total porosity, field capacity, wilting point, and saturated hydraulic conductivity of each layer of soil, waste, or other material in a landfill profile. These values can be selected from a list of default materials provided by the HELP program (Table 4) or specified by the user. User-specified values can be measured, estimated, or calculated using empirical or semi-empirical methods presented in this appendix. Selecting the HELP values from default materials or calculating them based on empirical or semi-empirical techniques are not intended to replace laboratory or field generated data. Default and calculated values are suitable for planning purposes, parametric studies, and design comparisons, but are not recommended for accurate water balance predictions. The default and calculated values are for water retention and flow; therefore, leachate is assumed to behave the same as water. The effects of macropores resulting from poor construction practices, burrowing animals, desiccation cracks, etc. are not taken into account in the calculation of the properties or in the default values, but the saturated hydraulic conductivity of the surface soil described by the default values is modified for grassy vegetation.

A.2 EMPIRICAL METHOD

The empirical method for calculating HELP program user-defined values employs empirical equations reported by Brakensiek et al. (1984) and Springer and Lane (1987) to determine soil water retention parameters (field capacity and wilting point) and an empirical equation developed by Kozeny-Carman to determine saturated hydraulic conductivity. The total porosity and percent sand, silt, and clay of each layer is the minimum data required to calculate user-defined values using this method.

A.2.1 Total Porosity

Total porosity is a measure of the volume of void (water and air) space in the bulk volume of porous media. At 100 percent saturation, total porosity is equivalent to the volumetric water content of the media (volume of water per total volume of media) or

$$\textit{Total Porosity} = \frac{\textit{Water Volume}}{\textit{Total Volume}} \qquad \text{(A-1)}$$

Total porosity can be calculated by developing a solid, liquid, and air phase relationship of each layer. This relationship can be calculated using the water content (on a weight basis) and density (wet or dry) of a sample. Introductory geotechnical engineering textbooks such as Holtz and Kovacs (1981) and Perloff and Baron (1976) provide detail guidance for determining phase relationships. Total porosity is also related to void ratio (ratio of void volume to solid volume) by the following equation:

$$\textit{Total Porosity} = \frac{\textit{Void Ratio}}{1 + \textit{Void Ratio}} \qquad \text{(A-2)}$$

A.2.2 Soil-Water Retention

Field capacity is the volumetric water content of a soil or waste layer at a capillary pressure of 0.33 bars. Field capacity is also referred to as the volumetric water content of a soil remaining following a prolonged period of gravity drainage. Wilting point is the volumetric water content of a soil or waste layer at a capillary pressure of 15 bars. Wilting point is also referred to as the lowest volumetric water content that can be achieved by plant transpiration. The general relation among soil moisture retention parameters and soil texture class is shown below.

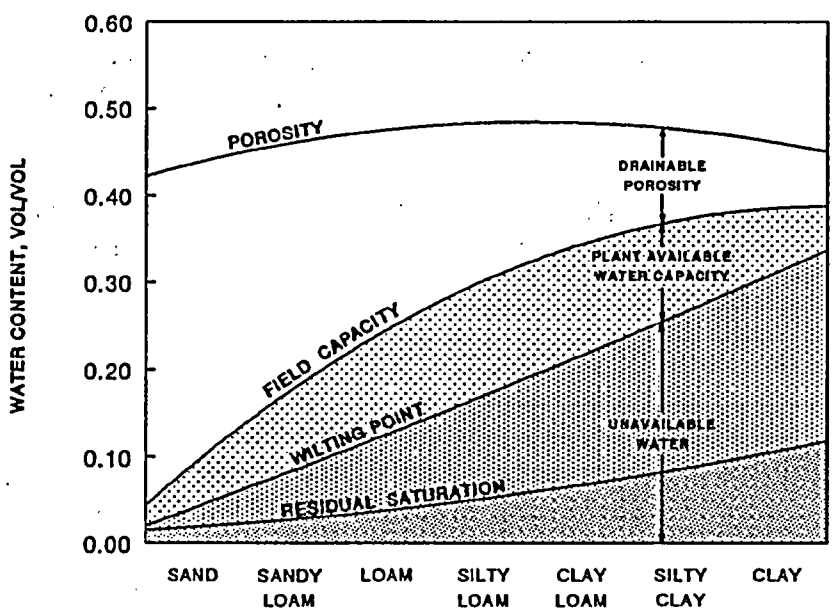

Figure A-21. General Relation Among Soil Moisture Retention Properties and Soil Texture Class

Brakensiek et al. (1984) and Springer and Lane (1987) reported the following empirical equations, which were developed using data from natural soils with a wide range of sand (5-70 percent) and clay (5-60 percent) content:

$$\textit{Field Capacity} = 0.1535 - (0.0018)(\%\ Sand) + (0.0039)(\%\ Clay) + (0.1943)(Total\ Porosity) \quad \text{(A-3)}$$

$$\textit{Wilting Point} = 0.0370 - (0.0004)(\%\ Sand) + (0.0044)(\%\ Clay) + (0.0482)(Total\ Porosity) \quad \text{(A-4)}$$

Sand and clay percentages should be determined using a grain size distribution chart and particle sizes defined by the U.S. Department of Agriculture textural soil classification system. According to this system, sand particles range in size from 0.05 mm to 2.0 mm, silt particles from 0.002 mm to 0.05 mm, and clay particles are less than 0.002 mm.

Numerous other equations relating field capacity and wilting point to soil textural properties have been developed. Most of these equation were developed using site-specific data. However, Gupta and Larson (1979) developed empirical equations for field capacity and wilting point using data from separate and mixed samples of dredged sediment and soil from 10 geographic locations in eastern and central United States. Rawls and Brakensiek (1982) and Rawls et al. (1982) also developed empirical equations by fitting the Brooks and Corey's (1964) soil water retention equation to soil water retention and matrix potential data from 500 natural soils in 18 states. Rawls' (1982) equations are not applicable to soils subjected to compactive efforts.

Williams et al. (1992) concluded that equations used to predict water contents based on texture and bulk density alone provided poorer estimates of water content, with large errors at some capillary pressures, in comparison with models that incorporate even one known value of water content. HELP users generally do not have adequate information to use models that require unsaturated water content information; therefore, Equations A-3 and A-4 are used to calculate the water retention of soil and waste layers.

A.2.3 Saturated Hydraulic Conductivity

Saturated hydraulic conductivity (sometimes referred to as the coefficient of permeability) is used as a constant in Darcy's law governing flow through porous media. Hydraulic conductivity is a function of media properties, such as the particle size, void ratio, composition, fabric and degree of saturation, and the kinematic viscosity of the fluid moving through the media. Saturated hydraulic conductivity is used to describe flow through porous media where the void spaces are filled with a wetting fluid (e.g. water). Permeability, unlike saturated hydraulic conductivity, is solely a function of media

properties. Henri Darcy's experiments resulted in the following equation for hydraulic conductivity (Freeze and Cherry, 1979):

$$K = \left(\frac{g}{\nu}\right) C\, d^2 \qquad \text{(A-5)}$$

where

K = hydraulic conductivity, cm/sec

g = acceleration due to gravity, 981 cm/sec^2

υ = kinematic viscosity of water, 1.14 x 10^{-2} cm^2/sec at 15°C

C = proportionality constant, replaced in Equation A-6 by a function of the porosity

d = particle diameter, cm, approximated for nonuniform particles by Equation A-7

Darcy's proportionality constant is dependent on the shape and packing of the soil grains (Freeze and Cherry, 1979). Since porosity represents an integrated measure of the packing arrangement in a porous media, the following semi-empirical, uniform pore-size equation relating Darcy's proportionality constant and porosity was developed by Kozeny-Carman (Freeze and Cherry, 1979):

$$K_s = \left(\frac{g}{\nu}\right)\left[\frac{n^3}{(1-n)^2}\right]\left(\frac{d_g^2}{1.80\times10^4}\right) \qquad \text{(A-6)}$$

where

K_s = saturated hydraulic conductivity, cm/sec

g = acceleration due to gravity = 981 cm/sec^2

υ = kinematic viscosity of water, 1.14 x 10^{-2} cm^2/sec at 15°C

n = total porosity

d_g = geometric mean soil particle diameter, mm, computed by Equation A-7

The original Kozeny equation was obtained from a theoretical derivation of Darcy's Law where the porous media was treated as a bundle of capillary tubes (Bear 1972). Carman introduced an empirical coefficient to Kozeny's equation to produce the semi-empirical Kozeny-Carman equation (Brutsaert 1967). The Kozeny-Carman's equation reported in Freeze and Cherry (1979) was altered to allow the mean particle size to be entered in millimeters.

Freeze and Cherry (1979) indicated that the particle diameter of a non-uniform soil can be described using a mean particle size diameter. Shirazi and Boersma (1984)

indicated that geometric rather than arithmetic statistical properties are advocated for describing soil samples. The reason, in part, is that there is a wide range of particle sizes in a natural soil sample making the geometric scale much more suitable than the arithmetic scale. Therefore, the mean particle diameter in Kozeny-Carman's equation reported in Freeze and Cherry (1979) was identified as the geometric mean soil particle diameter.

Shirazi et al. (1988) and Shiozawa and Campbell (1991) indicated that bimodal models describe particle grain size curves more accurately than unimodal models. However, analysis performed by Shiozawa and Campbell (1991) on six Washington state soils exhibiting varying sand, silt, and clay fractions indicated that the unimodal model accurately predicted the geometric mean soil particle diameter in all soils tested. Therefore, Shiozawa and Campbell (1991) developed an equation for geometric mean soil particle diameter by using the unimodal model developed by Shirazi and Boersma (1984); using geometric mean particles sizes based on the USDA classification system, as recommended by Shirazi, et al. (1988); and assuming that the soil was composed entirely of clay, silt, and sand. Shiozawa and Campbell's (1991) equation was altered to relate percent silt and clay to the particle diameter; resulting in the following equation:

$$d_g = exp\,[-1.151 - 0.07713\,(\%\ Clay) - 0.03454\,(\%\ Silt)] \qquad \text{(A-7)}$$

where

d_g = geometric mean soil particle diameter, mm

Percent silt and clay should be determined using a grain size distribution chart and grain sizes defined by the U.S. Department of Agriculture (USDA) textural soil classification system (see para A.2.2).

Kozeny-Carman's equation coupled with Shiozuwa and Campbell's equation for mean diameter was applied to soils data provided by Lane and Washburn (1946). These data included void ratio and grain size distribution curves for three soils composed of differing degrees of silt and sand. The saturated hydraulic conductivity predicted by Kozeny-Carman's equation was compared with laboratory data provided by Lane and Washburn (1946). This comparison indicated that Kozeny-Carman's saturated hydraulic conductivity equation coupled with Shiozuwa and Campbell's mean diameter equation can overpredict measured values by one to two orders of magnitude. Although conservative, these results reemphasize the fact that semi-empirical equations are not meant to replace laboratory or field measured data.

Numerous other empirical equations, with limited application, have been developed to estimate saturated hydraulic conductivity from the physical properties of soils. For example, Freeze and Cherry (1979), Holtz and Kovacs (1981), and Lambe and Whitman (1969) presented various forms of Allen Hazen's equation for determining the saturated hydraulic conductivity of silt, sand, and gravel soils. Rawls and Brakensiek (1985) also

presented an equation for determining the saturated hydraulic conductivity of soils with varying degrees of sand (5-70 percent) and clay (5-60 percent).

A.3 SEMI-EMPIRICAL METHOD

The semi-empirical method for determining the HELP program user-defined values employs a theoretical equation developed by Brooks and Corey (1964) to determine soil-water retention parameters (field capacity and wilting point) and a semi-empirical equation developed by Brutsaert (1967) and Rawls et al. (1982) to calculate saturated hydraulic conductivity. The total porosity, residual volumetric water content, pore-size distribution index, and bubbling pressure of each layer are the minimum data required to calculate the user-defined values for this method. As previously mentioned, total porosity can be calculated using Equation A-1 or A-2.

A.3.1 Soil-Water Retention

The HELP program does not allow the user to define the Brooks-Corey parameters (residual volumetric water content, pore-size distribution index, and bubbling pressure) of the soil, waste, or barrier layers; therefore, if these data are available, the user must first calculate field capacity and wilting point using Brooks and Corey's (1964) water retention equation:

$$\frac{\theta - \theta_r}{\phi - \theta_r} = \left(\frac{\psi_b}{\psi}\right)^{\lambda} \qquad \text{(A-8)}$$

where

θ = volumetric water content (field capacity or wilting point), unitless

θ_r = residual saturation volumetric water content, unitless

ϕ = total porosity, unitless

λ = pore-size distribution index, unitless

ψ = capillary pressure, bars (at field capacity, 0.33, or wilting point, 15.0)

ψ_b = bubbling pressure, bars

The volumetric water content in Equation A-8 is, by definition, equivalent to field capacity at a capillary pressure of 0.33 bar and is equivalent to wilting point at a capillary pressure of 15 bars. The HELP program will use the calculated field capacity and wilting point values to recalculate the Brooks-Corey parameters; however, because the program estimates the residual saturation water content from the wilting point before using Equation A-8 to calculate the other Brooks-Corey parameters, the program values will differ slightly from the laboratory data.

A.3.2 Saturated Hydraulic Conductivity

Brutsaert (1967) derived a saturated hydraulic conductivity relation by substituting Brooks-Corey's water retention equation into the Childs and Collis-George (1950) series-parallel coefficient of permeability integral. Rawls et al. (1982 and 1983) presented the following form of Brutsaert's (1967) equation:

$$K_s = a \frac{(\phi - \theta_r)^2}{(\psi_b)^2} \frac{\lambda^2}{(\lambda+1)(\lambda+2)} \tag{A-9}$$

where

K_s = saturated hydraulic conductivity, cm/sec

a = constant representing the effects of various fluid constants and gravity, 21 cm^3/sec

ϕ = total porosity, unitless

θ_r = residual volumetric water content, unitless

ψ_b = bubbling pressure, cm

λ = pore-size distribution index, unitless

Childs and Collis-George's (1950) series-parallel coefficient of permeability model assumes that the porous media is equivalent to a number of parallel portions each with a different hydraulic conductivity and each with uniform pore size. The hydraulic conductivity of each portion is obtained from the assumption of a bundle of capillary tubes parallel to the direction of flow. The media is fractured at a normal plane with two resulting faces, which are then rejoined after some random displacement (Brutsaert, 1967).

Rawls et al. (1982) fit Equation A-9 (using geometric mean values for Brooks-Corey parameters) to saturated hydraulic conductivity values from their data base and obtained a good correlation between these and predicted values. Rawls et al. (1982) and Rawls et al. (1983) subsequently recommended using an "a" constant of 21 cm/sec. However, Rawls et al. (1982) fit Equation A-9 to data presented by other researchers and obtained saturated hydraulic conductivities that overpredicted the data by three to four times. Although conservative, these results re-emphasize the fact that empirical equations are not meant to replace laboratory or field measured data.

A.4 VEGETATED, SATURATED HYDRAULIC CONDUCTIVITY

If the saturated hydraulic conductivity of a soil or waste layer is not selected from the HELP default data base, the program will not adjust the saturated hydraulic conductivity to account for root penetration by surface vegetation. Therefore, the user must adjust the saturated hydraulic conductivity in the top half of the evaporative zone. The program

adjusts the default values using the following equation developed by regressing changes in infiltration resulting from vegetation.

$$(K_s)_v = [1.0 + 0.5966\,(LAI) + 0.132659\,(LAI)^2 + 0.1123454\,(LAI)^3 - 0.04777627\,(LAI)^4 + 0.004325035\,(LAI)^5]\,(K_s) \qquad \text{(A-10)}$$

where

$(K_s)_v$ = vegetated saturated hydraulic conductivity in top half of evaporative zone, cm/sec

LAI = leaf area index, unitless

K_s = unvegetated saturated hydraulic conductivity in top half of evaporative zone, cm/sec

A.5 CONCLUSIONS

The HELP program user-defined values for total porosity, field capacity, wilting point, and saturated hydraulic conductivity can be conservatively calculated using empirical or semi-empirical methods presented in this appendix. Total porosity, percent sand, silt and clay, and particle diameter are the minimum data required to calculate user-defined values using the empirical method. Total porosity and Brooks-Corey parameters are the minimum data required for the semi-empirical method. Where available, comparisons with measured values re-emphasized the fact that neither of these methods is intended to replace laboratory or field generated data.

A.6 REFERENCES

Bear, J. (1972). *Dynamics of fluids in porous media.* American Elsevier Publishing Company, New York. 764 pp.

Brakensiek, D. L., Rawls, W. J., and Stephenson, G. R. (1984). "Modifying SCS hydrologic soil groups and curve numbers for rangeland soils." *Annual meeting of the American society of agricultural engineers, Pacific northwest region.* Kennewick, WA, USDA-ARS, Paper Number PNR-84-203. 13 pp.

Brooks, R. H., and Corey, A. T. (1964). "Hydraulic properties of porous media," *Hydrology Papers* (3), Colorado State University, Fort Collins, CO. 27 pp.

Brutsaert, W. (1967). "Some methods of calculating unsaturated permeability," *Transactions of the American Society of Agricultural Engineers* 10(3), 400-404.

Childs, E. C., and Collis-George, N. (1950). "The permeability of porous material," *Proceeding of the Royal Society* 201, Section A.

Freeze, R. A., and Cherry, J. A. (1979). *Groundwater.* Prentice-Hall, Englewood Cliffs, NJ. 604 pp.

Gupta, S. C., and Larson, W. E. (1979). "Estimating soil water retention characteristics from particle size distribution, organic matter percent, and bulk density," *Water Resources Research* 15(6), 1633-1635.

Holtz, R. D., and Kovacs, W. D. (1981). *An introduction to geotechnical engineering.* Prentice-Hall, Englewood Cliffs, NJ. 733 pp.

Lambe, T. W., and Whitman, R. V. (1969). *Soil mechanics.* John Wiley and Sons, New York. 553 pp.

Lane, K. S., and Washburn, D. E. (1946). "Capillary tests by capillarimeter and by soil filled tubes." *Proceedings of the twenty-sixth annual meeting of the Highway Research Board*, Washington, D.C., 460-473.

Perloff, W. H., and Baron, W. (1976). *Soil mechanics - principles and applications.* John Wiley and Sons, New York. 745 pp.

Rawls, W. J., and Brakensiek, D. L. (1982). "Estimating soil water retention from soil properties," *Journal of the Irrigation and Drainage Division* 108(IR2), 166-171.

Rawls, W. J., and Brakensiek, D. L. (1985). "Prediction of soil water properties for hydrologic modelling." *Proceedings of watershed management in the eighties.* B. Jones and T. J. Ward, ed., American Society of Civil Engineers, New York, 293-299.

Rawls, W. J., Brakensiek, D. L., and Saxton, K. E. (1982). "Estimation of soil water properties," *Transactions of the American Society of Agricultural Engineers* 25(5), 1316-1320.

Rawls, W. J., Brakensiek, D. L., and Soni, B. (1983). "Agricultural management effects on soil water processes - part I: Soil water retention and green and ampt infiltration parameters," *Transactions of the American Society of Agricultural Engineers* 26(6), 1747-1757.

Shiozawa, S., and Campbell, G. S. (1991). "On the calculation of mean particle diameter and standard deviation from sand, silt, and clay fractions," *Soil Science* 152(6), 427-431.

Shirazi, M. A., and Boersma, L. (1984). "A unifying quantitative analysis of soil texture," *Soil Science Society of America Journal* 48(1), 142-147.

Shirazi, M. A., Boersma, L., and Hart, J. W. (1988). "A unifying quantitative analysis of soil texture: Improvement of precision and extension of scale," *Soil Science Society of America Journal* 52(1), 181-190.

Springer, E. P., and Lane, L. J. (1987). "Hydrology-component parameter estimation." *Chapter 6, simulation of production and utilization of rangelands (SPUR) - documentation and user guide.* J. R. Wight and J. W. Skiles, eds, ARS-63, US Department of Agriculture, Agricultural Research Service. 372 pp.

Williams, R. D., Ahujam, L. R., and Naney, J. W. (1992). "Comparison of methods to estimate soil water characteristics from soil texture, bulk density, and limited data," *Soil Science* 153(3), 172-184.