Document ID:EDF-4365
Revision ID:0
Effective Date:2/13/04

Engineering Design File

PROJECT FILE NO. 23048

Expected Dose-Reduction Factors from Argonne National Laboratory-East Remote-Handled Waste in a 30-gal Drum Overpack

INEEL
Idaho National Engineering and Environmental Laboratory

Form 412.14
10/9/2003
Rev. 05

EDF No.: 4365 EDF Rev. No.: 0 Project File No.: 23048

1. Title: Expected Dose-Reduction Factors from Argonne National Laboratory-East Remote-Handled Waste in a 30-gal Drum Overpack

2. Index Codes:
Building/Type WMF 714 SSC ID N/A Site Area RWMC

3. NPH Performance Category: _____ or ☒ N/A

4. EDF Safety Category: _____ or ☒ N/A SCC Safety Category: _____ or ☒ N/A

5. Summary: The purpose of this engineering design file is to determine the expected dose-reduction factor achieved when placing a 30-gal drum of Argonne National Laboratory-East (ANL-E) remote-handled transuranic (RH-TRU) waste in a 30-gal drum overpack. The overpack is composed of carbon steel with a lid and wall thickness of 3.5" (8.89 cm)

MicroShield Version 6.0 was used to calculate exposure rates used to determine dose-reduction factors and the effectiveness of the overpack as a shield. Activity of ANL-E RH TRU waste was normalized to 1 Ci of Cs-137. The matrix configurations modeled were (1) combustible, (2) a mixture of combustible and metal, and (3) noncombustible. The geometries modeled were a 30-gal drum and an overpack. Effectiveness of the shield without the effects of geometry was determined by modeling two point-source geometries.

The dose-reduction factors ranged from 110 to 32 (from contact to 1,200 cm) for a uniform source distribution in a matrix. The variation of the DRF with distance is caused by differences in the spatial redistributions of the photon fields from the thin drum wall and the thick wall of the overpack shield, which is an effect of geometry. The dose-reduction factor provided by the shielded overpack for a point-source geometry was 26.

Based on the calculations performed in a uniform source distribution of ANL-E RH-TRU waste, approximately 5.3 Ci of Cs-137 (equivalent external dose of 21 R/hr) can be placed in the overpack, and the contact exposure rate will be less than 200 mR/hr. ANL-E RH-TRU waste that exhibits a point source distribution will have a higher contact dose rate when placed in an 30-gal drum overpack configuration. For this latter case, approximately a 0.7 Ci of Cs-137 can effectively be shielded in the overpack, and the contact exposure rate will be less than 200 mR/hr. Based on the acceptable knowledge documentation collected on the ANL-E waste, it is believed the waste activity is mostly homogenously distributed in the waste.

6. Review (R) and Approval (A) and Acceptance (Ac) Signatures:
(See instructions for definitions of terms and significance of signatures.)

	R/A	Typed Name/Organization	Signature	Date
Performer/Author	N/A	Cecilia R. Hoffman/4642, Physicist	C. Hoffman	2/12/04
Technical Checker	R	Ted S. Bohn/7610, Rad. Engineer	C. Hoffman for t. bohn	2/12/04
Independent Peer Reviewer (if applicable)	R	Pui Kuan/3K13, Nuclear Engineer	Pui Kuan	2/12/04
Approver	A	Robert J. Waters/3F10, Proj. Mgr	Robert J. Waters	2/13/04
Requestor (if applicable)	R/Ac	Raj N. Bhatt/3F10, Proj. Engineer	Raj N. Bhatt	2/12/04
Doc. Control	Ac	Juana Cruz	Juana Cruz	2/13/04

7. Distribution: (Name and Mail Stop)

R. N. Bhatt/MS 2510, T. S. Bohn/MS 4138, D. A. Griggs/MS 4201, C. R. Hoffman/MS 3710, P. Kuan/MS 3885, D. D. Morgan/MS 4202, D. W. Parker/MS 2414, M. J. Sherick/MS 2510, R. J. Waters/MS 2510

Summary page only: Herbert Bohrer (NE-ID)/MS 4209, Christian Natoni (NE-ID)/MS 4209, Steven Davies/MS 3920, John Schaffer/MS 4209, Ed Ziemianski (NE-ID)/MS 4209

EDF No.: 4365 EDF Rev. No.: 0 Project File No.: 23048

1. Title: Expected Dose-Reduction Factors from Argonne National Laboratory-East Remote-Handled Waste in a 30-gal Drum Overpack
2. Index Codes:
   Building/Type WMF 714 SSC ID N/A Site Area RWMC

8. Does document contain sensitive unclassified information? ☐ Yes ☒ No
   If Yes, what category:

9. Can document be externally distributed? ☒ Yes ☐ No
10. Uniform File Code: 6150 Disposition Authority: ENV1-j-1
    Record Retention Period: Cut off when superceded, obsolete, or cancelled
11. For QA Records Classification Only: ☐ Lifetime ☒ Nonpermanent ☐ Permanent
    Item and activity to which the QA Record apply:
12. NRC related? ☐ Yes ☒ No

13. Registered Professional Engineer's Stamp (if required) N/A

CONTENTS

ACRONYMS 5

1. INTRODUCTION 7

2. BACKGROUND 7

3. ARGONNE NATIONAL LABORATORY-EAST REMOTE-HANDLED TRANSURANIC WASTE SOURCE TERM 8

4. WASTE COMPOSITION 9

   4.1 Combustible Waste Matrix 9

   4.2 Combustible and Metal Waste Matrix 10

   4.3 Noncombustible Waste Matrix 11

5. GEOMETRIES MODELED WITH MICROSHIELD 11

   5.1 Thirty-gallon Drum Geometry 12

   5.2 Overpack Geometry 13

   5.3 Point-source Geometry 14

   5.4 Point-source Geometry with an Overpack Shield 14

6. EXPOSURE RATES PER GEOMETRY 14

   6.1 Source Matrices and Waste Geometries 14

   6.2 Point-source Geometries 15

7. MICROSHIELD RESULTS 15

   7.1 Combustible-source Matrix MicroShield Results 16

   7.2 Combustible- and Metal-source Matrix MicroShield Results 17

   7.3 Noncombustible-source Matrix MicroShield Results 18

   7.4 Point-source MicroShield Results 19

8. DISCUSSION 19

9. CONCLUSION 21

10. REFERENCES 21

Appendix A—MicroShield Version 6.0 Batch Output 23

FIGURES

1. Configuration of a 30-gal drum containing Argonne National Laboratory-East remote-handled transuranic waste 7

2. Configuration of a 30-gal drum overpack containing Argonne National Laboratory-East remote-handled transuranic waste 8

3. Thirty-gallon drum geometry to be modeled with MicroShield 12

4. Thirty-gallon drum geometry as modeled with MicroShield 13

5. Geometry of the overpack as modeled with MicroShield 13

6. Point-source geometry modeled with MicroShield 14

7. Exposure rates at the mid-plane of the 30-gal drum 15

TABLES

1. Radioisotopic composition of remote-handled transuranic waste, projected to September 1, 2004, of Fuel Element DP61 8

2. Remote-handled transuranic source term by photon energy and emission rates 9

3. Chemical composition of the combustible waste matrix 10

4. Chemical composition of the combustible and metal waste matrix 10

5. Chemical composition of noncombustible waste matrix composition 11

6. Composition of pail, drum and overpack 12

7. Exposure rates and dose-reduction factors of the combustible-source matrix 16

8. Exposure rates and dose-reduction factors for the combustible- and metal-source matrix 17

9. Exposure rates and dose-reduction factors for the noncombustible-source matrix 18

10. Exposure rates and dose-reduction factors for point-source geometries 19

11. Exposure rates normalized to Cs-137 based on combustible-source matrix 20

ACRONYMS

ANL-E	Argonne National Laboratory-East
DRF	dose-reduction factor
EDF	engineering design file
ILTSF	Intermediate-Level Transuranic Storage Facility
INEEL	Idaho National Engineering and Environmental Laboratory
PVC	polyvinyl chloride
RH	remote handled
TRU	transuranic

This page is intentionally left blank.

Expected Dose-Reduction Factors from Argonne National Laboratory-East Remote-Handled Waste in a 30-gal Drum Overpack

1. INTRODUCTION

The Intermediate-Level Transuranic Storage Facility (ILTSF) at the Idaho National Engineering and Environmental Laboratory (INEEL) has been used as a temporary storage facility for remote-handled (RH) transuranic (TRU) waste since 1976. A large effort has been and is underway to characterize and ship the TRU waste stored at the Radioactive Waste Management Complex at the INEEL to the Waste Isolation Pilot Plant in New Mexico for permanent disposal. The purpose of this engineering design file (EDF) is to determine the expected dose-reduction factor (DRF) achieved when placing a 30-gal drum of Argonne National Laboratory-East (ANL-E) RH-TRU waste in a 30-gal overpack. This task was performed using MicroShield Version 6.0 (Grove 2003).

The DRF will aid in determining safe working conditions during the process of waste characterization because the DRF can provide an estimate of the exposure rate at the surface of a container once it is placed in the overpack.

2. BACKGROUND

The ANL-E RH-TRU waste was generated at the Alpha Gamma Hot Cell Facility during the destructive examination of experimental fuel elements. The INEEL currently has 617 30-gal drums of ANL-E RH-TRU waste received from 1976 to 1995. The waste is primarily stored in the vaults at ILTSF. These drums are considered RH-TRU waste because the exposure rate upon arrival at the INEEL was between 200 mR/hr and 30 R/hr (IT 2003). The maximum projected dose rate as of 9/1/04 will be 22.3 R/hr at contact[a]. The definition of RH-TRU waste is transuranic waste with a measured radiation dose rate greater than 200 mR/hr (DOE 1995).

A typical drum of ANL-E waste is a 30-gal drum containing a high-density polyethylene drum liner, a paper liner, two polyvinyl chloride (PVC) bags, two polyethylene discs, and two 7.5-gal pails. A typical ANL-E RH-TRU drum is shown in Figure 1.

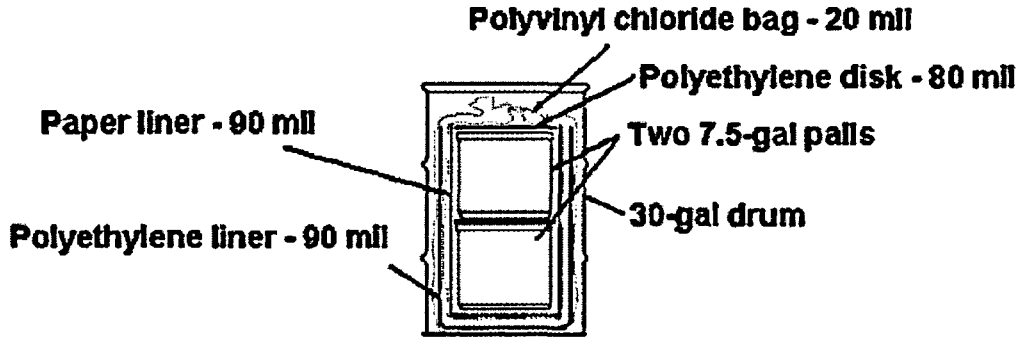

Figure 1. Configuration of a 30-gal drum containing Argonne National Laboratory-East remote-handled transuranic waste.

---

a. This calculation was based on data presented in *AK Documentation Report for INEEL-Stored Remote-Handled Transuranic Waste from Argonne National laboratory-East*. All of the contact dose rates were decayed to 9/1/04 based on the Cs-137.

As the waste is removed from the ILTSF vaults, it may be placed in an 8.89-cm (3.5-in.) thick 30-gal drum carbon steel overpack. Two purposes for an overpack are temporary storage and dose reduction. Figure 2 displays a 30-gal-drum waste configuration inside the 30-gal drum overpack.

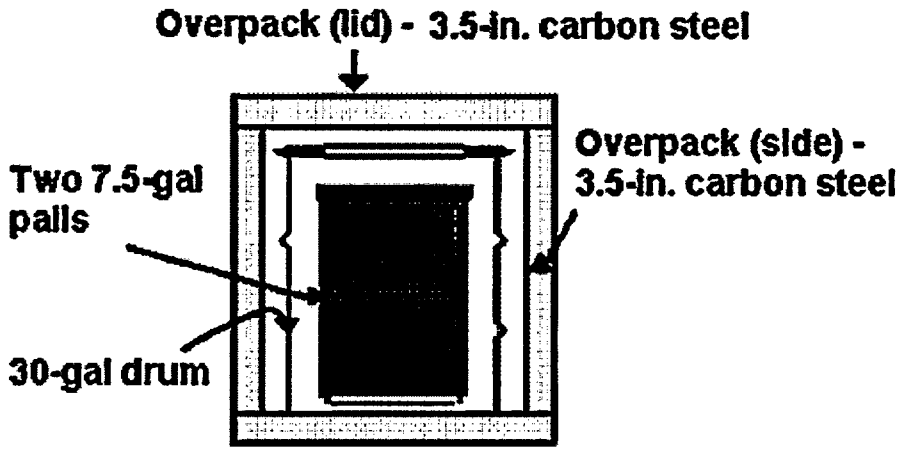

Figure 2. Configuration of a 30-gal drum overpack containing Argonne National Laboratory-East remote-handled transuranic waste.

3. ARGONNE NATIONAL LABORATORY-EAST REMOTE-HANDLED TRANSURANIC WASTE SOURCE TERM

The *Evaluation of Radionuclide Contents in RH-TRU Waste Drums 728-737 Based on Reported Irradiated Fuel Examination* (Kuan 2003) provides a detailed evaluation of radioisotopic distribution in fuel elements based on burnup history. The data used for this EDF are based on data provided in the Evaluation of Radionuclide Contents (Kuan 2003) for a typical element, DP61. Activities for the radionuclides found in Fuel Element DP61 have been normalized to 1 Ci of Cs-137, and the activation products (i.e. Fe-55, Co-60, Cs-134, and Eu-154) were enhanced by a factor of 10 for conservatism. The radioisotopic composition of the source used for this EDF, projected to September 1, 2004, is summarized in Table 1.

Table 1. Radioisotopic composition of remote-handled transuranic waste, projected to September 1, 2004, of Fuel Element DP61.

Isotope	Activity (Ci)	Isotope	Activity (Ci)	Isotope	Activity (Ci)
Fe-55	4.24E-02	Pm-147	8.40E-02	U-238	2.48E-07
Co-60	6.40E-03	Sm-151	3.31E-02	Pu-238	1.43E-03
Kr-85	5.62E-02	Eu-154	2.46E-02	Pu-239	4.07E-02
Sr-90	7.26E-01	Eu-155	1.51E-02	Pu-240	2.23E-02
Y-90	7.26E-01	Tl-208	8.34E-08	Am-241	1.39E-02
Sb-125	4.35E-03	U-232	2.33E-07	Pu-241	3.48E-01
Cs-134	1.12E-02	U-233	1.61E-08	Pu-242	7.07E-06
Cs-137	1.00E+00	U-234	1.38E-04		
Ba-137M	9.46E-01	U-235	4.59E-06		

Pure beta emitters (i.e. Cs-137, Sr-90, and Y-90) were excluded from the list because they do not emit photons. Bremsstrahlung was not considered as a viable contribution to the photon activity because the waste is composed mainly of materials with low atomic weight, reducing the probability of producing Bremsstrahlung reactions. Iron-55 was excluded because of its negligible photon emission. Neutron production from spontaneous fission and from the (α,n) reaction was also not considered to measurably contribute to the personnel dose.

To determine the source term, each isotope was analyzed for all photon emissions. Data for photon emissions were obtained from Nuclear Data, a database maintained at the Brookhaven National Laboratory in Upton, New York. The relative activity from Table 1 was multiplied by the fractional yield for each of 867 photon emissions and converted to photon emission rate. The photons were grouped into 18 groups characterized by the sum of the photon emissions and the emission weighted-average energy. The energy groupings are summarized in Table 2.

Table 2. Remote-handled transuranic source term by photon energy and emission rates.

Photon Energy (MeV)	Emission Rate (γ/s)	Photon Energy (MeV)	Emission Rate (γ/s)	Photon Energy (MeV)	Emission Rate (γ/s)
0.007[a]	2.963E+09	0.382	2.964E+06	0.989	1.047E+08
0.0347	3.492E+09	0.428	5.591E+07	1.108	4.176E+08
0.070	7.064E+08	0.465	2.065E+07	1.302	5.642E+08
0.113	7.471E+08	0.515	9.772E+06	1.595	1.690E+07
0.151	1.574E+09	0.586	6.575E+07	1.847	1.620E+04
0.247	6.472E+07	0.662	3.161E+10	2.159	4.499E+03
0.282	9.566E+05	0.738	2.618E+08	2.614	3.065E+03
0.305	2.933E+08	0.868	1.328E+08		

a. The lowest photon energy that can be entered into MicroShield Version 6.0 is 0.015 MeV when building an external source file. Therefore, the energy entered into the source file was 0.015.

4. WASTE COMPOSITION

The waste compositions used are taken from EDFs-2067 and –2070.[b] These documents were chosen in the absence of a detailed composition analysis of ANL-E RH-TRU waste. Based on a cursory evaluation of the combustible and noncombustible compositions of ANL-E waste and those in EDFs-2067 and -2070, the matrices are similar. Three waste matrices were modeled. The first matrix modeled was a combustible matrix inside a metal pail. The second waste matrix is a combustible and metal matrix. The third matrix is a noncombustible matrix inside a metal pail.

4.1 Combustible Waste Matrix

The combustible waste was taken from Table 10 of EDF-2070. The chemical composition of the combustible waste matrix is listed in Table 3. Density of the waste matrix is 0.197 g/cm^3. The waste configuration consists of waste, a pail, a polyethylene and air mixture, and a 30-gal drum.

b. EDF-2070, "Combustibles, 500-gal Drum Surrogate (PDP-Type), Design and As-Built Data (Draft)," INEEL, December 2003 (available from the Project File located Technical Support Building in Idaho Falls, Idaho).

Table 3. Chemical composition of the combustible waste matrix.

Element	Atoms/cm^3	Atomic Weight	Weight Percent
Hydrogen	9.81E+21	1.008	8.156
Carbon	5.94E+21	12.011	58.842
Nitrogen	1.48E+20	14.007	1.710
Oxygen	1.22E+21	15.999	16.038
Fluorine	3.59E+20	18.998	5.627
Chlorine	3.29E+20	35.453	9.622
Potassium	1.30E+17	39.098	0.004

4.2 Combustible and Metal Waste Matrix

The combustible and metal waste matrix was taken from Table 11 of EDF-2070. This waste matrix was chosen due to the variability in the combustible waste drums. After viewing videotapes of the packaging operations at ANL-E, it was noted that several waste containers often had metal placed inside combustible waste containers. This matrix will simulate not only the metal in the waste but the 7.5-gal pail. The chemical composition is shown in Table 4. Density of the waste is 0.289 g/cm^3. The waste configuration modeled consisted of waste, a polyethylene and air mixture, and a 30-gal drum. The pails are considered part of the waste matrix and are not modeled separately in MicroShield Version 6.0.

Table 4. Chemical composition of the combustible and metal waste matrix.

Element	Atoms/cm^3	Atomic Weight	Weight Percent
Hydrogen	1.3093E+22	1.008	7.574
Carbon	7.5821E+21	12.011	52.266
Nitrogen	1.4813E+20	14.007	1.190
Oxygen	1.2152E+21	15.999	11.157
Fluorine	3.5927E+20	18.998	3.915
Magnesium	8.5035E+18	24.305	0.119
Aluminum	7.4014E+20	26.982	11.459
Silicon	4.4152E+18	28.086	0.071
Phosphorous	9.1313E+16	30.974	0.002
Sulfur	1.1763E+17	32.066	0.002
Chlorine	3.2917E+20	35.453	6.694
Potassium	1.3034E+17	39.098	0.003
Titanium	6.4721E+17	47.867	0.021
Chromium	9.9372E+17	51.996	0.030
Manganese	1.0791E+18	54.938	0.034
Iron	1.6891E+20	55.845	5.417
Copper	8.9441E+17	63.546	0.033
Zinc	3.9521E+17	65.39	0.015

4.3 Noncombustible Waste Matrix

The composition of the noncombustible waste matrix was taken from Table 16 in EDF-2067. The noncombustible waste chemical composition used for this matrix is shown in Table 5. Density of the waste form is 0.325 g/cm^3. The waste configuration consists of waste, a pail, a polyethylene and air mixture, and a 30-gal drum.

Table 5. Chemical composition of noncombustible waste matrix composition.

Element	Atoms/cm^3	Atomic Weight	Weight Percent
Hydrogen	2.77E+21	1.008	1.419
Carbon	1.63E+21	12.011	9.977
Nitrogen	3.94E+19	14.007	0.281
Oxygen	1.66E+20	15.999	1.349
Magnesium	9.63E+17	24.305	0.012
Aluminum	8.43E+20	26.982	11.570
Silicon	1.74E+19	28.086	0.249
Phosphorous	1.67E+18	30.974	0.026
Sulfur	1.49E+18	32.066	0.024
Chlorine	7.50E+19	35.453	1.353
Titanium	9.78E+17	47.867	0.024
Chromium	1.59E+20	51.996	4.200
Manganese	2.27E+19	54.983	0.636
Iron	1.89E+21	55.845	53.664
Nickel	7.45E+19	58.7	2.225
Copper	3.85E+20	63.546	12.459
Zinc	1.37E+19	65.39	0.457
Molybdenum	4.70E+16	95.94	0.002
Silver	1.37E+17	107.87	0.008
Tin	1.08E+18	118.69	0.065

5. GEOMETRIES MODELED WITH MICROSHIELD

Two waste configuration geometries and two point-source geometries were modeled with MicroShield. The waste configuration geometries modeled were a 30-gal drum and an overpack geometry. The point-source geometries were a point source and a point-source geometry with an overpack shield. The two waste-configuration geometries simulate the waste in a homogenous source matrix. The point-source geometry determines effectiveness of the shield by removing the effects of geometry.

A typical configuration of ANL-E waste is shown in Figure 1 and consists of a 30-gal drum, which contains a high-density polyethylene drum liner, a paper liner, two PVC bags, two polyethylene discs, and two 7.5-gal pails.

5.1 Thirty-gallon Drum Geometry

The 30-gal drum geometry to be modeled with MicroShield Version 6.0 is shown in Figure 3. This geometry is a 30-gal drum with a single 15-gal pail to simulate two stacked 7.5-gal waste pails. (The exception to this is that the combustible and metal waste matrix did not include the pails separately but included them in the waste matrix.) The composition of the space between the waste pail and the drum was modeled as being polyethylene and air due to the various materials (e.g., polyethylene liner, paper liner, PVC bags, and air) present in that space.

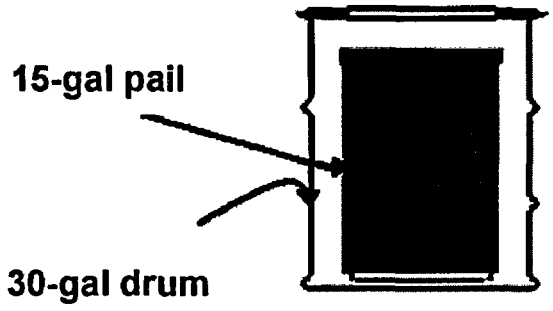

Figure 3. Thirty-gallon drum geometry to be modeled with MicroShield.

Table 6 lists items that required custom material files to be built in MicroShield that are not considered the source matrix (e.g., 30-gal drum). The chemical compositions of the 15-gal pail and the 30-gal drum are assumed to be the same composition as those taken from the "Standard Specification for Steel, Sheet, Cold-Rolled, Carbon, Structural, High-Strength Low-Alloy and High-Strength Low-Alloy with Improved Formability" (ASTM 2003). The density of the pail and drum as modeled with MicroShield is 7.872 g/cm^3. The dimensions of a 15-gal pail are 64.5 cm high with an inner radius of 18.7 cm. The dimensions of the 30-gal drum are 73.7 cm high with an inner radius of 23.1 cm.

The chemical composition of polyethylene is $(CH_2{=}CH_2)_x$ (Sax and Lewis 1987). A density of 1 g/cm^3 was used.

Table 6. Composition of pail, drum and overpack.

	Element and Weight Fraction (%)						
Item	Hydrogen	Carbon	Manganese	Phosphorous	Sulfur	Silicon	Iron
Pail or drum	—	0.10	0.60	0.03	0.035	—	99.235
Overpack	—	0.30	0.70	0.035	0.035	0.10	98.830
Polyethylene	14.4	85.6	—	—	—	—	—

The geometry was modeled as a cylinder with side shields. The cylinder simulates the homogenous source inside the 15-gal pail with a height is 64.5 cm and a radius of 18.7 cm. The 15-gal pail was modeled as wall and top cladding; the exception to this was the combustible-with-metal matrix. It was assumed that 26-gauge steel was used in the body of the pail (ANSI 1991); the cladding in the model is 0.04 cm. The 4.45-cm gap between the pail and the 30-gal drum is modeled as a shield consisting of a

mixture of air and polyethylene. The body of the 30-gal drum is assumed to be 18-gauge steel with a wall thickness of 0.109 cm. Figure 4 depicts the 30-gal drum geometry as modeled with MicroShield.

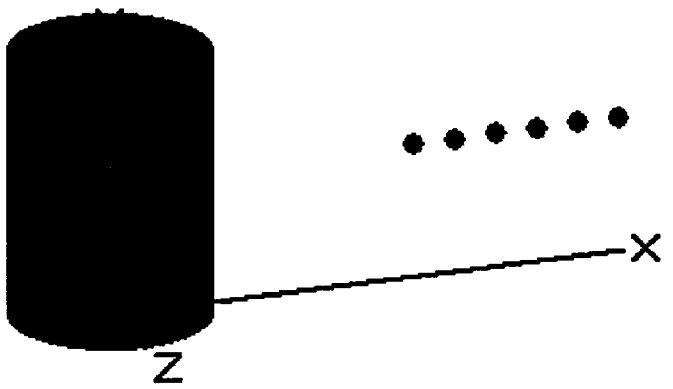

Figure 4. Thirty-gallon drum geometry as modeled with MicroShield.

5.2 Overpack Geometry

The overpack geometry is the same geometry as the 30-gal drum except that the 30-gal drum is inside a 30-gal drum overpack. Figure 5 shows the geometry as modeled with MicroShield. The dimensions of the overpack are 81.3 cm high with an inner radius of 31.8 cm a wall thickness of 8.89 cm, and a lid thickness of 8.89 cm. Because the model simulates exposure-rate measurements at mid-plane of the 15-gal pail, the thickness of the shield for the overpack is 8.89 cm. An air shield of 8.52 cm was modeled between the 30-gal drum and the overpack based on the dimension of both containers.

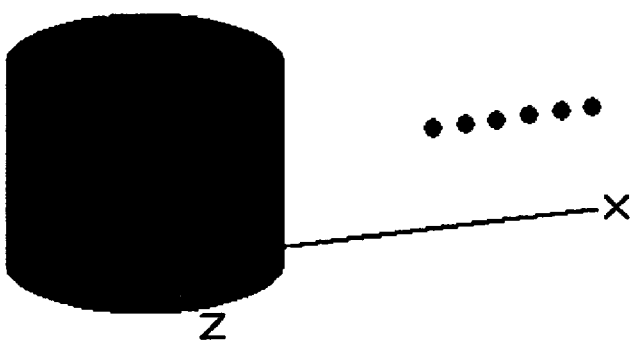

Figure 5. Geometry of the overpack as modeled with MicroShield.

The chemical composition of the overpack was taken from the "Standard Specification for Seamless Carbon Steel Pipe for High-Temperature Service" (ASTM 2002) and is shown in Table 6. The density of the overpack is assumed to be 7.872 g/cm^3.

5.3 Point-source Geometry

The point-source geometry is a point source without a source matrix. The point source has four shields to simulate a hot particle at the edge of a 7.5-gal pail. The first shield simulates the 15-gal pail. The second shield is to simulate the materials (including air) between the pail and the 30-gal drum. The third shield is the 30-gal drum, and the last shield is air. The point-source configuration is shown in Figure 6.

Figure 6. Point-source geometry modeled with MicroShield.

5.4 Point-source Geometry with an Overpack Shield

The point-source geometry with an overpack shield is the same configuration as the point-source geometry with the addition of a shield at approximately 985 cm. The shield is the same material, thickness, and density as the 30-gal drum overpack. This configuration removes the effects of geometry and gives the effectiveness of the 30-gal drum overpack.

6. EXPOSURE RATES PER GEOMETRY

Eight cases were modeled with MicroShield Version 6. Each of the three source matrices was modeled in the 30-gal drum geometry and the overpack geometry for a total of six cases (i.e., the combustible source was modeled in the 30-gal drum geometry and in the overpack geometry). Also modeled were point-source geometry and point-source geometry with an overpack shield.

6.1 Source Matrices and Waste Geometries

The exposure rates from each source matrix (i.e., combustible, combustible and metal, and noncombustible) were analyzed for the 30-gal drum geometry and the overpack geometry. Distances at which exposure rates were determined are contact, 1, 2, 3, 4, 5, 6, 7, 8, 9, 10, 30, 50, 60, 70, 80, 90, 100, 200, 400, 600, 800, 1,000 and 1,200 cm from the surface of the outer container. For the purposes of this EDF, the contact measurement is assumed to be 0.5 cm. The actual distance at which a contact exposure-rate measurement is taken varies depending on the instrument used to make the measurement. The exposure-rate points were all located at the vertical mid-plane of the 15-gal pail (not the overpack) as shown in Figure 7. The close distances were used to model the effect of buildup from the 30-gal drum overpack on the DRF. The distant points were used to compare with the point-source geometry. For both geometries, the calculations were from the surface of the container at the mid-plane of the 15-gal pail.

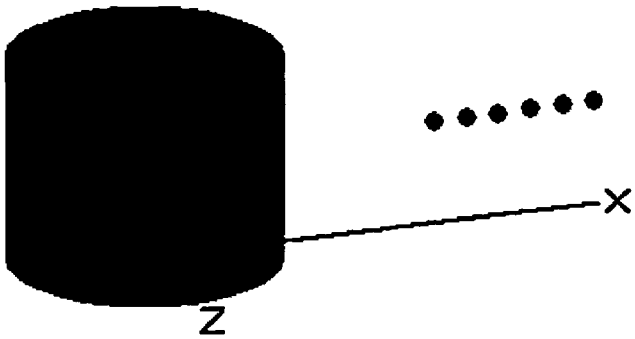

Figure 7. Exposure rates at the mid-plane of the 30-gal drum.

6.2 Point-source Geometries

Both point-source geometries were modeled to obtain the effectiveness of the 30-gal drum overpack as a shield. MicroShield calculated exposure rates at 1,000 cm from the point source. When the overpack shield was introduced, the shield was placed at approximately 985 cm from the point source, and the exposure rate was calculated at 1,000 cm. Because exposure-rate points were calculated at 1,000 cm for the source-matrix geometries, the exposure rates and DRFs could be compared at the same distance.

7. MICROSHIELD RESULTS

Verification and validation of MicroShield Version 6.0 has been documented in EDF-4068, "Verification and Validation of MicroShield Version 6." The exposure rates with the 30-gal drum overpack in place were analyzed using a cubic polynomial in the natural logarithm to estimate exposure rates at contact of the overpack surface (see Appendix A).

MicroShield tends to produce erroneous results close to transition boundaries between shields. Reference distances were chosen to approach the transition boundary between the air and the surface of the overpack and extend to 1,200 cm to model the exposure rates as a function of distance.

All MicroShield case files are located in the Project File maintained in the Technical Support Building in Idaho Falls, Idaho. The execution of the case files was performed as a batch file in MicroShield, the output is presented in Appendix A.

7.1 Combustible-source Matrix MicroShield Results

Exposure rates for the combustible source in the 30-gal drum geometry and the overpack geometry are shown in Table 7. Dose-reduction factors were determined by dividing the unshielded exposure rate by the shielded exposure rate at the same distance. Dose-reduction factors are listed in Table 7. The variation of the DRF with distance is caused by differences in the spatial redistributions of the photon fields from the thin drum wall and the thick wall of the overpack shield, which is an effect of geometry.

Table 7. Exposure rates and dose-reduction factors from the surface of a combustible-source matrix.

Distance (cm)	Shielded Exposure Rate (mR/hr)	Unshielded Exposure Rate (mR/hr)	Dose-reduction Factor
0.5	3.773E+01	4.132E+03	110
1	3.714E+01	3.986E+03	107
2	3.600E+01	3.719E+03	103
3	3.490E+01	3.479E+03	100
4	3.385E+01	3.263E+03	96
5	3.285E+01	3.067E+03	93
6	3.188E+01	2.889E+03	91
7	3.095E+01	2.726E+03	88
8	3.006E+01	2.576E+03	86
9	2.921E+01	2.439E+03	83
10	2.838E+01	2.312E+03	81
30	1.689E+01	9.858E+02	58
50	1.096E+01	5.372E+02	49
60	9.062E+00	4.191E+02	46
70	7.605E+00	3.358E+02	44
80	6.465E+00	2.749E+02	43
90	5.559E+00	2.291E+02	41
100	4.827E+00	1.938E+02	40
200	1.684E+00	5.933E+01	35
400	5.000E-01	1.643E+01	33
600	2.336E-01	7.525E+00	32
800	1.338E-01	4.282E+00	32
1,000	8.611E-02	2.751E+00	32
1,200	5.973E-02	1.911E+00	32

7.2 Combustible- and Metal-source Matrix MicroShield Results

The exposure rates for the combustible- and metal-source matrix in the 30-gal drum geometry and the overpack geometry are shown in Table 8. The DRFs determined for the combustible- and metal-source matrix are listed in Table 8.

Table 8. Exposure rates and dose-reduction factors from the surface of a combustible- and metal-source matrix.

Distance (cm)	Shielded Exposure Rate (mR/hr)	Unshielded Exposure Rate (mR/hr)	Dose-reduction Factor
0.5	3.532E+01	3.987E+03	113
1	3.476E+01	3.846E+03	111
2	3.370E+01	3.588E+03	106
3	3.268E+01	3.357E+03	103
4	3.170E+01	3.150E+03	99
5	3.076E+01	2.961E+03	96
6	2.986E+01	2.789E+03	93
7	2.900E+01	2.633E+03	91
8	2.817E+01	2.489E+03	88
9	2.737E+01	2.356E+03	86
10	2.660E+01	2.234E+03	84
30	1.584E+01	9.527E+02	60
50	1.028E+01	5.190E+02	50
60	8.501E+00	4.048E+02	48
70	7.134E+00	3.243E+02	45
80	6.064E+00	2.654E+02	44
90	5.213E+00	2.212E+02	42
100	4.526E+00	1.871E+02	41
200	1.578E+00	5.722E+01	36
400	4.680E-01	1.583E+01	34
600	2.186E-01	7.248E+00	33
800	1.252E-01	4.123E+00	33
1,000	8.055E-02	2.649E+00	33
1,200	5.587E-02	1.839E+00	33

7.3 Noncombustible-source Matrix MicroShield Results

The exposure rates (i.e., shielded and unshielded) for the noncombustible source in the 30-gal drum geometry and the overpack geometry are shown in Table 9. The DRFs determined for the noncombustible-source matrix are also listed in Table 9.

Table 9. Exposure rates and dose-reduction factors from the surface of a noncombustible-source matrix.

Distance (cm)	Shielded Exposure Rate (mR/hr)	Unshielded Exposure Rate (mR/hr)	Dose-reduction Factor
0.5	3.463E+01	3.925E+03	113
1	3.409E+01	3.787E+03	111
2	3.305E+01	3.535E+03	107
3	3.205E+01	3.309E+03	103
4	3.109E+01	3.105E+03	100
5	3.018E+01	2.919E+03	97
6	2.929E+01	2.751E+03	94
7	2.845E+01	2.596E+03	91
8	2.763E+01	2.455E+03	89
9	2.685E+01	2.325E+03	87
10	2.610E+01	2.204E+03	84
30	1.555E+01	9.415E+02	61
50	1.009E+01	5.131E+02	51
60	8.349E+00	4.003E+02	48
70	7.007E+00	3.207E+02	46
80	5.956E+00	2.625E+02	44
90	5.120E+00	2.187E+02	43
100	4.445E+00	1.850E+02	42
200	1.550E+00	5.660E+01	37
400	4.598E-01	1.565E+01	34
600	2.148E-01	7.166E+00	33
800	1.230E-01	4.076E+00	33
1,000	7.913E-02	2.618E+00	33
1,200	5.489E-02	1.818E+00	33

7.4 Point-source MicroShield Results

The unshielded exposure rate is the point-source geometry. The shielded exposure rate is the point-source geometry with a shield at approximately 985 cm to simulate the overpack. Exposure rates were calculated at 1,000 cm from the source. The radioisotopic composition for the source is taken from Table 1 and the source term was taken from Table 2. These two cases remove the effects of geometry when determining the DFR and give the effectiveness of the overpack as a shield. The exposure rates and the DRF are shown in Table 10.

Table 10. Exposure rates and dose-reduction factors from a point-source.

Distance From Source (cm)	Shielded Exposure Rate (mR/hr)	Unshielded Exposure Rate (mR/hr)	Dose-reduction Factor
1,000	1.332E-01	3.471E+00	26

When the overpack shield is placed is at approximately the 13 cm (the same distance that the overpack is found in the overpack configuration) the contact dose rate at outside of the overpack is 281 mR/hr, based on radioisotopic distribution used in modeling. The radioisotopic distribution was normalized to 1 Ci of Cs-137.

8. DISCUSSION

It is important to remember in the waste geometries that all distances are from the outer container (i.e., 30-gal drum or overpack). When the geometry is that of the overpack, the contact exposure point is approximately 17.5 cm farther away from the source matrix than when the geometry is that of a 30-gal drum. This is because the surface of the drum is inside the overpack and the overpack wall is 8.89 cm thick with an air gap of 8.52 cm between the 30-gal drum and the overpack. Because of the need to determine contact exposure rates, the distance was not altered so that the contact exposure rates could be directly compared. As distance is increased, this anomaly becomes less important.

The most conservative set of DRFs is the combustible-source matrix. For the purposes of this EDF, the most conservative set of DRFs will be used. Dose-reduction factors are not affected by chemical composition of the waste as much as by the density of the materials (e.g., shielding and source). The combustible-source matrix DRFs range from 110 to 32 (contact to 1,200 cm). The variation of the DRF with distance is caused by differences in the spatial redistributions of the photon fields from the thin drum wall and the thick shield overpack. At 600 cm, the DRF remains constant.

It is important to remember that no number is absolute, that each exposure rate has an uncertainty attached to it. For the purposes of this EDF, a 10% uncertainty will be attached to the exposure rates calculated with MicroShield Version 6. Table 11 illustrates the exposure rate at contact for a homogenous-source matrix normalized to Cs-137. Approximately 5.3 Ci of Cs-137 in a homogenous-source matrix can be placed in an overpack and a contact dose rate of less than 200 mR/hr can be maintained. The exposure rate is contingent on the validity of the assumptions used in this EDF.

Table 11 also shows that 21 R/hr is the maximum unshielded contact exposure rate for a 30-gal drum of ANL-E RH-TRU waste before being placed in an overpack that can still maintain a contact exposure rate of less than 200 mR/hr, if the assumptions modeled are true. The greatest uncertainty in these calculations will be that the source matrix was modeled accurately. The contact exposure rate of a

handful of drums maybe greater than 20 R/hr on 9/1/04[c] and therefore, a small number of drums may need to have some additional shielding to reduce the contact exposure rate to less than 200 mR/hr if the waste is a uniform source distribution and the waste matrix assumptions are valid.

Table 11. Exposure rates normalized to Cs-137 based on combustible-source matrix (dose-reduction factor is 110).

Cs-137 (Ci)	Unshielded Exposure Rate (mR/hr)	Shielded Exposure Rate (mR/hr)
0.0484	2.0E+02 ± 0.2E+02	1.8E+00 ± 0.2E+00
0.05	2.1E+02 ± 0.2E+02	1.9E+00 ± 0.2E+00
0.075	3.1E+02 ± 0.3E+02	2.8E+00 ± 0.3E+00
0.1	4.1E+02 ± 0.4E+02	3.8E+00 ± 0.4E+00
0.25	1.0E+03 ± 0.1E+03	9.4E+00 ± 0.9E+00
0.5	2.1E+03 ± 0.2E+03	1.9E+01 ± 0.2E+01
0.75	3.1E+03 ± 0.3E+03	2.8E+01 ± 0.3E+01
1.0	4.1E+03 ± 0.4E+03	3.8E+01 ± 0.4E+01
2.0	8.3E+03 ± 0.8E+03	7.5E+01 ± 0.8E+01
3.0	1.2E+04 ± 0.1E+04	1.1E+02 ± 0.1E+02
4.0	1.7E+04 ± 0.2E+04	1.5E+02 ± 0.2E+02
5.0	2.1E+04 ± 0.2E+04	1.9E+02 ± 0.2E+02
5.1	2.1E+04 ± 0.2E+04	1.9E+02 ± 0.2E+02
5.2	2.1E+04 ± 0.2E+04	2.0E+02 ± 0.2E+02
5.3	2.2E+04 ± 0.2E+04	2.0E+02 ± 0.2E+02
5.4	2.2E+04 ± 0.2E+04	2.0E+02 ± 0.2E+02
5.5	2.3E+04 ± 0.2E+04	2.1E+02 ± 0.2E+02

Drums that exhibit a point source distribution will have a higher contact dose rate when placed in the 30-gal drum overpack. When the waste exhibits a point source distribution, waste with approximately of 0.7 Ci of Cs-137 can be placed in the 30-gal drum overpack and still maintain a contact dose rate of less than 200 mR/hr. Based on the acceptable knowledge documentation collected on the ANL-E waste, it is believed the waste activity is mostly homogenously distributed in the waste.

c. This calculation was based on data presented in *AK Documentation Report for INEEL-Stored Remote-Handled Transuranic Waste from Argonne National laboratory-East*. All of the contact dose rates were decayed to 9/1/04 based on the Cs-137.

Drums that may not be RH-TRU waste may or may not exhibit an exposure rate reading if placed inside an overpack. Handheld exposure-rate instruments typically have an uncertainty of ± 20%. Measurements below 1 mR/hr are unreliable unless the measurement is taken in a laboratory environment. The background is another factor that affects measurement at low exposure rates. Based on Table 11, in a laboratory environment, a drum with a contact exposure rate of 200 mR/hr will have a 1.8-mR/hr exposure rate at contact of the overpack. A contact exposure rate with uncertainty in the instruments and background levels will be difficult to measure in the field. Also, contact exposure-rate measurements are taken anywhere up to 3 cm depending on the instrument used in the measurement. Based on this knowledge, 0.5 cm was chosen as being a conservative value and was used as the contact measurement.

9. CONCLUSION

The 30-gal drum overpack provides an effective shield for approximately 5.3 Ci of Cs-137 of ANL-E RH-TRU waste, assuming a uniform source distribution. The exposure rate reduction factor at contact is 110. Equivalently, a drum having a contact exposure rate of 21 R/hr will yield a contact exposure rate of approximately 199 mR/hr when placed inside an overpack. The 30-gal drum overpack reduces the exposure rate by a factor of 26 (for a point source) when the effects of geometry are removed. If the ANL-E RH-TRU waste exhibits a point source distribution, 0.7 Ci of Cs-137 of ANL-E RH-TRU waste can be effectively shielded in the overpack. Based on the acceptable knowledge documentation collected on the ANL-E waste, it is believed the waste activity is mostly homogenously distributed in the waste. Based on the MicroShield calculations for a homogenous-source matrix, the reduction factor at 1,000 cm is 32.

10. REFERENCES

ANSI, 1991, "American National Standard for Materials Handling Containers – Steel Drums and Pails," ANSI MH2-1991, American National Standards Institute.

ASTM, 2002, "Standard Specification for Seamless Carbon Steel Pipe for High-Temperature Service" ASTM A-106, Rev. A, American Society for Testing and Materials, Conshohocken, Pennsylvania.

ASTM, 2003, "Standard Specification for Steel, Sheet, Cold-Rolled, Carbon, Structural, High-Strength Low-Alloy and High-Strength Low-Alloy with Improved Formability," ASTM A1008/A1008M-03, American Society for Testing and Materials, Conshohocken, Pennsylvania.

DOE, 1995, *Remote-Handled Transuranic Waste Study*, DOE/CAO 95-1095, U.S. Department of Energy Carlsbad Area Office.

EDF-2067, 2002, "Mixed Metals, 55-gal Drum Surrogate (PDP-Type), Design and As-Built Data," Rev. 0, Idaho National Engineering and Environmental Laboratory.

EDF-4068, 2003, "Verification and Validation of MicroShield Version 6," Rev. 0, Idaho National Engineering and Environmental Laboratory.

Grove, 2003, "MicroShield Version 6, 2003," Grove Engineering, Rockville, Maryland.

IT Corp, 2003, "AK Documentation Report for INEEL-Stored Remote-Handled Transuranic Waste from Argonne National laboratory-East", ITC-DOC-828599-02, Draft Final, IT Corporation.

Kuan, P., 2003, *Evaluation of Radionuclide Contents in RH TRU Waste Drums 728-737 Based on Reported Irradiated Fuel Examination*, INEEL/EXT-02-00168, Rev. 0, Idaho National Engineering and Environmental Laboratory.

Sax, N. I. and R. J. Lewis, 1987, *Hawley's Condensed Chemical Dictionary*, Eleventh Edition, New York: Van Nostran Reinhold Company.

Appendix A

MicroShield Version 6.0 Batch Output

This page is intentionally left blank.

Appendix A

MicroShield Version 6.0 Batch Output

Table A-1. MicroShield batch analysis output.

#	File	Dose Pt	Case	Geometry	Start Time	Elapsed	mR/hr + Buildup
1	Comb_m_sh1.ms6	1	Ref	7	4:06:56 PM	00:00:02	3.531E+001
2		2	Ref	7	4:06:58 PM	00:00:03	3.476E+001
3		3	Ref	7	4:07:01 PM	00:00:03	3.370E+001
4		4	Ref	7	4:07:04 PM	00:00:03	3.268E+001
5		5	Ref	7	4:07:07 PM	00:00:03	3.170E+001
6		6	Ref	7	4:07:10 PM	00:00:03	3.076E+001
7	Comb_m_sh2.ms6	1	Ref	7	4:07:13 PM	00:00:03	2.986E+001
8		2	Ref	7	4:07:15 PM	00:00:03	2.900E+001
9		3	Ref	7	4:07:18 PM	00:00:03	2.817E+001
10		4	Ref	7	4:07:21 PM	00:00:02	2.737E+001
11		5	Ref	7	4:07:23 PM	00:00:02	2.660E+001
12		6	Ref	7	4:07:26 PM	00:00:03	1.584E+001
13	comb_m_sh3.ms6	1	Ref	7	4:07:28 PM	00:00:03	1.028E+001
14		2	Ref	7	4:07:31 PM	00:00:03	8.501E+000
15		3	Ref	7	4:07:34 PM	00:00:03	7.134E+000
16		4	Ref	7	4:07:37 PM	00:00:03	6.064E+000
17		5	Ref	7	4:07:40 PM	00:00:04	5.213E+000
18		6	Ref	7	4:07:44 PM	00:00:03	4.526E+000
19	comb_m_sh4.ms6	1	Ref	7	4:07:48 PM	00:00:05	1.578E+000
20		2	Ref	7	4:07:53 PM	00:00:03	4.680E-001
21		3	Ref	7	4:07:56 PM	00:00:05	2.186E-001
22		4	Ref	7	4:08:01 PM	00:00:07	1.252E-001
23		5	Ref	7	4:08:08 PM	00:00:07	8.055E-002
24		6	Ref	7	4:08:15 PM	00:00:08	5.587E-002
25	Comb_m_unsh1.ms6	1	Ref	7	4:08:24 PM	00:00:03	3.987E+003
26		2	Ref	7	4:08:27 PM	00:00:03	3.846E+003
27		3	Ref	7	4:08:30 PM	00:00:03	3.588E+003
28		4	Ref	7	4:08:33 PM	00:00:03	3.357E+003
29		5	Ref	7	4:08:36 PM	00:00:03	3.150E+003
30		6	Ref	7	4:08:39 PM	00:00:03	2.961E+003
31	Comb_m_unsh2.ms6	1	Ref	7	4:08:42 PM	00:00:03	2.789E+003
32		2	Ref	7	4:08:45 PM	00:00:03	2.633E+003
33		3	Ref	7	4:08:48 PM	00:00:02	2.489E+003

Table A-1. (continued).

#	File	Dose Pt	Case	Geometry	Start Time	Elapsed	mR/hr + Buildup
34		4	Ref	7	4:08:50 PM	00:00:02	2.356E+003
35		5	Ref	7	4:08:52 PM	00:00:02	2.234E+003
36		6	Ref	7	4:08:55 PM	00:00:02	9.527E+002
37	Comb_m_unsh3.ms6	1	Ref	7	4:08:57 PM	00:00:02	5.190E+002
38		2	Ref	7	4:09:00 PM	00:00:02	4.048E+002
39		3	Ref	7	4:09:02 PM	00:00:02	3.243E+002
40		4	Ref	7	4:09:05 PM	00:00:03	2.654E+002
41		5	Ref	7	4:09:07 PM	00:00:03	2.212E+002
42		6	Ref	7	4:09:10 PM	00:00:02	1.871E+002
43	Comb_m_unsh4.ms6	1	Ref	7	4:09:12 PM	00:00:02	5.722E+001
44		2	Ref	7	4:09:15 PM	00:00:02	1.583E+001
45		3	Ref	7	4:09:17 PM	00:00:03	7.248E+000
46		4	Ref	7	4:09:20 PM	00:00:02	4.123E+000
47		5	Ref	7	4:09:22 PM	00:00:02	2.649E+000
48		6	Ref	7	4:09:25 PM	00:00:02	1.839E+000
49	Comb_sh1.ms6	1	Ref	7	4:09:27 PM	00:00:02	3.773E+001
50		2	Ref	7	4:09:30 PM	00:00:02	3.714E+001
51		3	Ref	7	4:09:32 PM	00:00:02	3.600E+001
52		4	Ref	7	4:09:35 PM	00:00:02	3.490E+001
53		5	Ref	7	4:09:37 PM	00:00:03	3.385E+001
54		6	Ref	7	4:09:40 PM	00:00:03	3.285E+001
55	Comb_sh2.ms6	1	Ref	7	4:09:43 PM	00:00:03	3.188E+001
h56		2	Ref	7	4:09:45 PM	00:00:03	3.095E+001
57		3	Ref	7	4:09:48 PM	00:00:02	3.006E+001
58		4	Ref	7	4:09:50 PM	00:00:03	2.921E+001
59		5	Ref	7	4:09:53 PM	00:00:03	2.838E+001
60		6	Ref	7	4:09:55 PM	00:00:03	1.689E+001
61	comb_sh3.ms6	1	Ref	7	4:09:58 PM	00:00:03	1.096E+001
62		2	Ref	7	4:10:01 PM	00:00:02	9.062E+000
63		3	Ref	7	4:10:03 PM	00:00:03	7.605E+000
64		4	Ref	7	4:10:06 PM	00:00:04	6.465E+000
65		5	Ref	7	4:10:10 PM	00:00:05	5.559E+000
66		6	Ref	7	4:10:15 PM	00:00:05	4.827E+000
67	Comb_sh4.ms6	1	Ref	7	4:10:21 PM	00:00:05	1.684E+000
68		2	Ref	7	4:10:26 PM	00:00:05	5.000E-001
69		3	Ref	7	4:10:31 PM	00:00:05	2.336E-001
70		4	Ref	7	4:10:36 PM	00:00:05	1.338E-001
71		5	Ref	7	4:10:41 PM	00:00:04	8.611E-002

Table A-1. (continued).

#	File	Dose Pt	Case	Geometry	Start Time	Elapsed	mR/hr + Buildup
72		6	Ref	7	4:10:45 PM	00:00:03	5.973E-002
73	Comb_unsh1.ms6	1	Ref	7	4:10:48 PM	00:00:02	4.132E+003
74		2	Ref	7	4:10:50 PM	00:00:03	3.986E+003
75		3	Ref	7	4:10:53 PM	00:00:03	3.719E+003
76		4	Ref	7	4:10:56 PM	00:00:02	3.479E+003
77		5	Ref	7	4:10:58 PM	00:00:02	3.263E+003
78		6	Ref	7	4:11:01 PM	00:00:03	3.067E+003
79	Comb_unsh2.ms6	1	Ref	7	4:11:04 PM	00:00:02	2.889E+003
80		2	Ref	7	4:11:06 PM	00:00:03	2.726E+003
81		3	Ref	7	4:11:09 PM	00:00:02	2.576E+003
82		4	Ref	7	4:11:11 PM	00:00:03	2.439E+003
83		5	Ref	7	4:11:14 PM	00:00:02	2.312E+003
84		6	Ref	7	4:11:16 PM	00:00:02	9.858E+002
85	Comb_unsh3.ms6	1	Ref	7	4:11:19 PM	00:00:03	5.372E+002
86		2	Ref	7	4:11:21 PM	00:00:02	4.191E+002
87		3	Ref	7	4:11:23 PM	00:00:03	3.358E+002
88		4	Ref	7	4:11:26 PM	00:00:02	2.749E+002
89		5	Ref	7	4:11:28 PM	00:00:02	2.291E+002
90		6	Ref	7	4:11:31 PM	00:00:02	1.938E+002
91	Comb_unsh4.ms6	1	Ref	7	4:11:34 PM	00:00:03	5.933E+001
92		2	Ref	7	4:11:36 PM	00:00:02	1.643E+001
93		3	Ref	7	4:11:38 PM	00:00:03	7.525E+000
94		4	Ref	7	4:11:41 PM	00:00:02	4.282E+000
95		5	Ref	7	4:11:44 PM	00:00:02	2.751E+000
96		6	Ref	7	4:11:46 PM	00:00:02	1.911E+000
97	NonComb_sh1.ms6	1	Ref	7	4:11:49 PM	00:00:02	3.463E+001
98		2	Ref	7	4:11:51 PM	00:00:02	3.409E+001
99		3	Ref	7	4:11:54 PM	00:00:03	3.305E+001
100		4	Ref	7	4:11:56 PM	00:00:03	3.205E+001
101		5	Ref	7	4:11:59 PM	00:00:02	3.109E+001
102		6	Ref	7	4:12:01 PM	00:00:03	3.018E+001
103	NonComb_sh2.ms6	1	Ref	7	4:12:04 PM	00:00:03	2.929E+001
104		2	Ref	7	4:12:07 PM	00:00:03	2.845E+001
105		3	Ref	7	4:12:09 PM	00:00:03	2.763E+001
106		4	Ref	7	4:12:12 PM	00:00:03	2.685E+001
107		5	Ref	7	4:12:15 PM	00:00:03	2.610E+001
108		6	Ref	7	4:12:19 PM	00:00:03	1.555E+001
109	NonComb_sh3.ms6	1	Ref	7	4:12:21 PM	00:00:04	1.009E+001

Table A-1. (continued).

#	File	Dose Pt	Case	Geometry	Start Time	Elapsed	mR/hr + Buildup
110		2	Ref	7	4:12:25 PM	00:00:04	8.349E+000
111		3	Ref	7	4:12:29 PM	00:00:03	7.007E+000
112		4	Ref	7	4:12:31 PM	00:00:03	5.956E+000
113		5	Ref	7	4:12:34 PM	00:00:03	5.120E+000
114		6	Ref	7	4:12:37 PM	00:00:03	4.445E+000
115	NonComb_sh4.ms6	1	Ref	7	4:12:40 PM	00:00:03	1.550E+000
116		2	Ref	7	4:12:42 PM	00:00:03	4.598E-001
117			Ref	7	4:12:45 PM	00:00:03	2.148E-001
118		4	Ref	7	4:12:48 PM	00:00:03	1.230E-001
119		5	Ref	7	4:12:51 PM	00:00:03	7.913E-002
120		6	Ref	7	4:12:53 PM	00:00:03	5.489E-002
121	NonComb_unsh1.ms6	1	Ref	7	4:12:56 PM	00:00:03	3.925E+003
122		2	Ref	7	4:12:59 PM	00:00:02	3.787E+003
123		3	Ref	7	4:13:01 PM	00:00:03	3.535E+003
124		4	Ref	7	4:13:04 PM	00:00:02	3.309E+003
125		5	Ref	7	4:13:06 PM	00:00:02	3.105E+003
126		6	Ref	7	4:13:09 PM	00:00:04	2.919E+003
127	NonComb_unsh2.ms6	1	Ref	7	4:13:13 PM	00:00:02	2.751E+003
128		2	Ref	7	4:13:16 PM	00:00:03	2.596E+003
129		3	Ref	7	4:13:18 PM	00:00:02	2.455E+003
130		4	Ref	7	4:13:21 PM	00:00:03	2.325E+003
131		5	Ref	7	4:13:24 PM	00:00:03	2.204E+003
132		6	Ref	7	4:13:26 PM	00:00:02	9.415E+002
133	NonComb_unsh3.ms6	1	Ref	7	4:13:29 PM	00:00:02	5.131E+002
134		2	Ref	7	4:13:31 PM	00:00:02	4.003E+002
135		3	Ref	7	4:13:34 PM	00:00:03	3.207E+002
136		4	Ref	7	4:13:36 PM	00:00:02	2.625E+002
137		5	Ref	7	4:13:39 PM	00:00:02	2.187E+002
138		6	Ref	7	4:13:41 PM	00:00:02	1.850E+002
139	NonComb_unsh4.ms6	1	Ref	7	4:13:44 PM	00:00:02	5.660E+001
140		2	Ref	7	4:13:46 PM	00:00:02	1.565E+001
141		3	Ref	7	4:13:48 PM	00:00:02	7.166E+000
142		4	Ref	7	4:13:51 PM	00:00:02	4.076E+000
143		5	Ref	7	4:13:53 PM	00:00:04	2.618E+000
144		6	Ref	7	4:13:57 PM	00:00:02	1.818E+000
145	Point_Source.ms6	1	Ref	1	4:14:00 PM	00:00:00	3.471E+000
146	Point_Source_Overpack.ms6	1	Ref	1	4:14:00 PM	00:00:00	1.332E-001