TABLE OF CONTENTS

Page

P.1 General Discussion P.1-1
P.1.1 Introduction P.1-3
P.1.2 General Description of the NUHOMS®-24PTH System P.1-5
P.1.2.1 NUHOMS®-24PTH System Characteristics P.1-5
P.1.2.1.1 NUHOMS®-24PTH DSC P.1-5
P.1.2.1.2 NUHOMS®-HSM-H Module P.1-6
P.1.2.1.3 NUHOMS®-OS197FC Transfer Cask P.1-7
P.1.2.2 Operational Features P.1-7
P.1.2.2.1 General Features P.1-7
P.1.2.2.2 Sequence of Operations P.1-7
P.1.2.2.3 Identification of Subjects for Safety and Reliability Analysis P.1-8
P.1.2.3 Cask Contents P.1-8
P.1.3 Identification of Agents and Contractors P.1-9
P.1.4 Generic Cask Arrays P.1-10
P.1.5 Supplemental Data P.1-11
P.1.6 References P.1-12

P.2 Principal Design Criteria P.2-1
P.2.1 Spent Fuel To Be Stored P.2-2
P.2.1.1 General Operating Functions P.2-5
P.2.2 Design Criteria for Environmental Conditions and Natural Phenomena P.2-6
P.2.2.1 Tornado Wind and Tornado Missiles P.2-6
P.2.2.1.1 Applicable Design Parameters P.2-6
P.2.2.1.2 Determination of Forces on Structure P.2-6
P.2.2.1.3 Tornado Missiles P.2-7
P.2.2.2 Water Level (Flood) Design P.2-8
P.2.2.3 Seismic Design P.2-8
P.2.2.4 Snow and Ice Loading P.2-8
P.2.2.5 Combined Load Criteria P.2-8
P.2.2.5.1 NUHOMS®–24PTH DSC Structural Design Criteria P.2-8
P.2.2.5.2 NUHOMS® HSM-H Structural Design Criteria P.2-11
P.2.3 Safety Protection Systems P.2-14
P.2.3.1 General P.2-14
P.2.3.2 Protection By Multiple Confinement Barriers and Systems P.2-14
P.2.3.3 Protection By Equipment and Instrumentation Selection P.2-14
P.2.3.4 Nuclear Criticality Safety P.2-14
P.2.3.4.1 Control Methods for Prevention of Criticality P.2-14
P.2.3.4.2 Error Contingency Criteria P.2-15
P.2.3.4.3 Verification Analysis-Benchmarking P.2-15
P.2.3.5 Radiological Protection P.2-15
P.2.3.6 Fire and Explosion Protection P.2-15
P.2.4 Decommissioning Considerations P.2-16

P.2.5 Summary of NUHOMS®-24PTH DSC and HSM-H Design Criteria P.2-17
P.2.5.1 24PTH DSC Design Criteria P.2-17
P.2.5.2 HSM-H Design Criteria P.2-17
P.2.6 References P.2-18

P.3 Structural Evaluation P.3.1-1
P.3.1 Structural Design P.3.1-1
P.3.1.1 Discussion P.3.1-1
P.3.1.1.1 General Description of the 24PTH DSC P.3.1-1
P.3.1.1.2 General Description of the HSM-H P.3.1-4
P.3.1.1.3 General Description of the HSM Model 102 ..... P.3.1-5
P.3.1.1.4 General Description of the OS197FC TC P.3.1-5
P.3.1.2 Design Criteria P.3.1-6
P.3.1.2.1 24PTH DSC Shell Assembly Confinement Boundary P.3.1-6
P.3.1.2.2 24PTH DSC Basket P.3.1-6
P.3.1.2.3 Alternatives to the ASME Code for the 24PTH DSC P.3.1-7
P.3.2 Weights and Centers of Gravity P.3.2-1
P.3.3 Mechanical Properties of Materials P.3.3-1
P.3.3.1 24PTH DSC Material Properties P.3.3-1
P.3.3.2 HSM-H Material Properties P.3.3-2
P.3.3.3 Materials Durability P.3.3-2
P.3.4 General Standards for Casks P.3.4-1
P.3.4.1 Chemical and Galvanic Reactions P.3.4-1
P.3.4.2 Positive Closure P.3.4-7
P.3.4.3 Lifting Devices P.3.4-7
P.3.4.4 Heat and Cold P.3.4-7
P.3.4.4.1 Summary of Pressures and Temperatures P.3.4-7
P.3.4.4.2 Differential Thermal Expansion P.3.4-8
P.3.4.4.3 Thermal Stress Calculations P.3.4-10
P.3.5 Fuel Rods P.3.5-1
P.3.6 Structural Analysis (Normal and Off-Normal Operations) P.3.6-1
P.3.6.1 Normal Operation Structural Analysis P.3.6-1
P.3.6.1.1 Normal Operating Loads P.3.6-1
P.3.6.1.2 Dry Shielded Canister Analysis P.3.6-3
P.3.6.1.3 NUHOMS®-24PTH Basket Structural Analysis P.3.6-6
P.3.6.1.4 NUHOMS® HSM-H Structural Analysis P.3.6-10
P.3.6.1.5 OS197/OS197H/OS197FC On-Site TC Analysis. P.3.6-12
P.3.6.2 Off-Normal Load Structural Analysis P.3.6-13
P.3.6.2.1 Jammed DSC during Transfer P.3.6-14
P.3.6.2.2 Off-Normal Thermal Loads Analysis P.3.6-15
P.3.6.2.3 HSM-H Off-Normal Loads P.3.6-16
P.3.6.2.4 OS197/OS197H/OS197FC Off-Normal Loads P.3.6-16
P.3.6.3 Damaged Fuel Integrity Assessment for Normal and Off-Normal Loads P.3.6-17

P.3.7 Structural Analysis (Accidents) P.3.7-1
P.3.7.1 Tornado Winds/Tornado Missile P.3.7-2
P.3.7.1.1 Effect of DBT Wind Pressure Loads on HSM-H P.3.7-2
P.3.7.2 Earthquake P.3.7-4
P.3.7.2.1 DSC Seismic Evaluation P.3.7-4
P.3.7.2.2 Basket Seismic Evaluation P.3.7-6
P.3.7.2.3 HSM-H Seismic Evaluation P.3.7-6
P.3.7.2.4 TC Seismic Evaluation P.3.7-8
P.3.7.3 Flood P.3.7-8
P.3.7.3.1 HSM-H Flooding Analysis P.3.7-8
P.3.7.3.2 DSC Flooding Analyses P.3.7-10
P.3.7.4 Accidental TC Drop P.3.7-10
P.3.7.4.1 General Discussion P.3.7-11
P.3.7.4.2 24PTH DSC Shell Assembly Drop Evaluation P.3.7-12
P.3.7.4.3 24PTH Basket Assembly Drop Evaluation P.3.7-14
P.3.7.4.4 On-site TC Horizontal and Vertical Drop Evaluation P.3.7-17
P.3.7.4.5 Loss of Neutron Shield P.3.7-17
P.3.7.5 Lightning P.3.7-17
P.3.7.6 Blockage of HSM-H Air Inlet and Outlet Openings P.3.7-17
P.3.7.7 DSC Leakage P.3.7-18
P.3.7.8 Accident Pressurization of DSC. P.3.7-18
P.3.7.9 Reduced HSM Air Inlet and Outlet Shielding P.3.7-18
P.3.7.10 Fire and Explosion P.3.7-18
P.3.7.11 Load Combinations P.3.7-18
P.3.7.11.1 DSC Load Combination Evaluation P.3.7-18
P.3.7.11.2 DSC Fatigue Evaluation P.3.7-19
P.3.7.11.3 TC Load Combination Evaluation P.3.7-19
P.3.7.11.4 TC Fatigue Evaluation P.3.7-19
P.3.7.11.5 HSM –H Load Combination Evaluations P.3.7-19
P.3.7.11.6 HSM-H Stress Analysis P.3.7-20
P.3.8 References P.3.8-1

P.4 Thermal Evaluation P.4-1
P.4.1 Discussion P.4-1
P.4.2 Summary of Thermal Properties of Materials P.4-4
P.4.3 Specifications for Components P.4-12
P.4.4 Thermal Analysis of HSM Model 102 and HSM-H with 24PTH DSC P.4-13
P.4.4.1 Ambient Temperature Specification P.4-13
P.4.4.2 Thermal Analysis of HSM-H with 24PTH DSC P.4-13
P.4.4.3 HSM-H Air flow Analysis (Stack Effect Calculations) P.4-15
P.4.4.4 Description of the Thermal Model of HSM-H with 24PTH DSC P.4-18
P.4.4.5 Description of the HSM-H Blocked Vent Model P.4-21
P.4.4.6 Description of Cases Evaluated for the HSM-H P.4-22
P.4.4.7 HSM-H Thermal Model Results P.4-23

P.4.4.7.1 Normal and Off-normal Operating Condition Results P.4-23
P.4.4.7.2 Accident Condition Results P.4-23
P.4.4.8 Evaluation of HSM-H Performance P.4-23
P.4.5 Thermal Analysis of Transfer Casks with 24PTH DSC P.4-24
P.4.5.1 Thermal Analysis of the NUHOMS® Standardized Cask with 24PTH DSC P.4-24
P.4.5.2 Thermal Model of 24PTH DSC in the OS197FC TC P.4-24
P.4.5.2.1 SINDA/FLUINT™ Thermal Desktop® General Code Description P.4-25
P.4.5.2.2 OS197FC TC SINDA/FLUINT™ Thermal Model P.4-25
P.4.5.2.3 DSC Steady State and Transient Conditions Thermal Models P.4-26
P.4.5.2.4 Natural Convection Heat Transfer Coefficients P.4-26
P.4.5.2.5 Neutron Shield Effective Thermal Conductivity P.4-27
P.4.5.3 Analysis Cases for OS197FC TC with 24PTH DSC P.4-28
P.4.5.4 Standardized TC Thermal Model Results P.4-28
P.4.5.5 OS197FC TC Thermal Model Results P.4-28
P.4.5.5.1 Normal and Off-Normal Conditions Results P.4-28
P.4.5.5.2 Normal and Off-Normal Operations with Air Circulation Results P.4-30
P.4.5.5.3 Accident Conditions P.4-32
P.4.5.6 Evaluation of OS197FC TC Performance P.4-34
P.4.6 NUHOMS®-24PTH DSC Basket Thermal Analysis P.4-35
P.4.6.1 NUHOMS® 24PTH DSC Basket and Payload Model P.4-35
P.4.6.2 Mesh Sensitivity Study P.4-36
P.4.6.3 Boundary Conditions for the DSC Basket Model P.4-36
P.4.6.4 Heat Generation for the DSC Basket Model P.4-36
P.4.6.5 DSC Thermal Evaluation for Normal Conditions of Storage and Transfer P.4-37
P.4.6.5.1 Boundary Conditions, Storage P.4-37
P.4.6.5.2 Boundary Conditions, Transfer P.4-37
P.4.6.5.3 Maximum Temperatures P.4-38
P.4.6.5.4 Maximum Internal Pressures P.4-38
P.4.6.5.5 Maximum Thermal Stresses P.4-41
P.4.6.5.6 Evaluation of 24PTH DSC Performance for Normal Conditions P.4-41
P.4.6.6 DSC Thermal Evaluation for Off-Normal Conditions P.4-41
P.4.6.6.1 Off-Normal Ambient Temperatures during Storage P.4-41
P.4.6.6.2 Boundary Conditions, Off-Normal Storage P.4-41
P.4.6.6.3 Off-Normal Ambient Temperatures during Transfer P.4-41
P.4.6.6.4 Boundary Conditions, Off-Normal Transfer P.4-42
P.4.6.6.5 24PTH DSC Thermal Model Results for Off-Normal Conditions of Storage and Transfer P.4-42

P.4.6.6.6 Off-Normal 24PTH DSC Maximum Internal Pressure during Storage/Transfer....P.4-42
P.4.6.6.7 Maximum Thermal Stresses....P.4-43
P.4.6.6.8 Evaluation of 24PTH DSC Performance for Off-Normal Conditions....P.4-43
P.4.6.7 DSC Thermal Evaluation for Accident Conditions....P.4-43
P.4.6.7.1 Blocked Vent Accident Evaluation....P.4-44
P.4.6.7.2 Transfer Accident Evaluation....P.4-44
P.4.6.7.3 Hypothetical Fire Accident Evaluation....P.4-44
P.4.6.7.4 Fuel Cladding and Basket Materials....P.4-45
P.4.6.7.5 Maximum Internal Pressures....P.4-45
P.4.6.7.6 Evaluation of the 24PTH DSC Performance During Accident Conditions....P.4-46
P.4.7 Thermal Evaluation for Loading/Unloading Conditions....P.4-47
P.4.7.1 Maximum Fuel Cladding Temperatures During Vacuum Drying....P.4-47
P.4.7.2 Evaluation of Thermal Cycling of Fuel Cladding During Vacuum Drying, Helium Backfilling and Transfer Operations....P.4-48
P.4.7.3 Reflooding Evaluation....P.4-49
P.4.8 Determination of Effective Thermal Properties of the Fuel, Basket and Air Within the HSM-H Closed Cavity....P.4-51
P.4.8.1 Determination of Bounding Effective Fuel Thermal Conductivity....P.4-51
P.4.8.1.1 Fuel Assemblies Evaluated....P.4-51
P.4.8.1.2 Summary of Thermal Properties of Materials....P.4-51
P.4.8.1.3 Calculation of Fuel Axial Effective Thermal Conductivity....P.4-51
P.4.8.1.4 Calculation of Fuel Transverse Effective Thermal Conductivity....P.4-51
P.4.8.1.5 Results....P.4-53
P.4.8.2 Calculation of Fuel Effective Specific Heat and Density....P.4-54
P.4.8.3 24PTH DSC Basket Effective Thermal Properties....P.4-55
P.4.8.4 Effective Air Conductivity in the HSM-H Closed Cavity....P.4-55
P.4.9 Determination of Convection Heat Transfer Coefficients for the HSM-H Surfaces and Components....P.4-58
P.4.9.1 Convection Coefficient for the HSM-H Side Heat Shield....P.4-58
P.4.9.2 Convection Coefficient for the HSM-H Top Heat Shield....P.4-63
P.4.9.3 Combination of Heat Transfer Coefficients for the HSM-H Roof and Front Wall....P.4-63
P.4.10 Confirmatory Thermal-Hydraulic Analysis Of The HSM-H....P.4-65
P.4.11 References....P.4-68

P.5 Shielding Evaluation....P.5-1
P.5.1 Discussion and Results....P.5-5
P.5.2 Source Specification....P.5-6
P.5.2.1 Gamma Source Term for MCNP....P.5-9

P.5.2.1.1 Design Basis Gamma Fuel Assembly Source Terms P.5-9
P.5.2.1.2 Design Basis CC Source Terms P.5-9
P.5.2.1.3 Uncertainty in Gamma Source Terms P.5-10
P.5.2.2 Neutron Source Term for MCNP P.5-10
P.5.2.3 Axial Peaking P.5-11
P.5.2.4 ANISN Evaluation for Bounding Source Terms P.5-12
P.5.2.5 Reconstituted Fuel P.5-14
P.5.3 Material Densities P.5-16
P.5.4 Shielding Evaluation P.5-17
P.5.4.1 Computer Program P.5-17
P.5.4.2 Spatial Source Distribution P.5-17
P.5.4.3 Cross Section Data P.5-18
P.5.4.4 Flux-to-Dose-Rate Conversion P.5-18
P.5.4.5 Methodology P.5-18
P.5.4.6 Assumptions P.5-18
P.5.4.6.1 Source Term Assumptions P.5-19
P.5.4.6.2 HSM-H Dose Rate Analysis Assumptions P.5-19
P.5.4.6.3 HSM-Model 102 Dose Rate Analysis Assumptions P.5-19
P.5.4.6.4 OS197FC TC and Standardized TC Dose Rate Analysis Assumptions P.5-20
P.5.4.7 Normal Condition Models P.5-20
P.5.4.7.1 24PTH-L DSC in HSM-H P.5-20
P.5.4.7.2 24PTH-S-LC DSC in HSM-Model 102 ..... P.5-21
P.5.4.7.3 24PTH-L DSC in OS197FC TC P.5-23
P.5.4.7.4 24PTH-S-LC in Standardized TC P.5-24
P.5.4.8 Accident Models P.5-24
P.5.4.9 OS197FC TC Models During Fuel Loading Operations P.5-24
P.5.5 Appendix P.5-26
P.5.5.1 Sample SAS2H/ORIGEN-S Input File P.5-26
P.5.5.2 Sample HSM-H MCNP4C2 Model P.5-27
P.5.5.3 Sample OS197FC TC MCNP4C2 Model P.5-43
P.5.5.4 Sample ANISN Model (TC –Group 23) P.5-58
P.5.6 References P.5-63

P.6 Criticality Evaluation P.6-1
P.6.1 Discussion and Results P.6-2
P.6.2 Package Fuel Loading P.6-4
P.6.3 Model Specification P.6-6
P.6.3.1 Description of Calculational Model P.6-6
P.6.3.2 Package Regional Densities P.6-7
P.6.4 Criticality Calculations P.6-9
P.6.4.1 Calculational Method P.6-9
P.6.4.1.1 Computer Codes P.6-9
P.6.4.1.2 Physical and Nuclear Data P.6-10

P.6.4.1.3 Bases and Assumptions P.6-10
P.6.4.1.4 Determination of k_{eff} P.6-12
P.6.4.2 Fuel Loading Optimization P.6-12
P.6.4.3 Criticality Results P.6-25
P.6.5 Critical Benchmark Experiments P.6-26
P.6.5.1 Benchmark Experiments and Applicability P.6-26
P.6.5.2 Results of the Benchmark Calculations P.6-27
P.6.6 Appendix P.6-28
P.6.6.1 References P.6-28
P.6.6.2 Sample CSAS25 Input Files P.6-29
P.6.6.3 Design Basis Case CSAS25 Input Deck P.6-68

P.7 Confinement P.7-1
P.7.1 Confinement Boundary P.7-2
P.7.1.1 Confinement Vessel P.7-2
P.7.1.2 Confinement Penetrations P.7-2
P.7.1.3 Seals and Welds P.7-3
P.7.1.4 Closure P.7-3
P.7.2 Requirements for Normal Conditions of Storage P.7-4
P.7.2.1 Release of Radioactive Material P.7-4
P.7.2.2 Pressurization of Confinement Vessel P.7-4
P.7.3 Confinement Requirements for Hypothetical Accident Conditions P.7-5
P.7.3.1 Fission Gas Products P.7-5
P.7.3.2 Release of Contents P.7-5
P.7.4 References P.7-6

P.8 Operating Systems P.8-1
P.8.1 Procedures for Loading the Cask P.8-2
P.8.1.1 Preparation of the TC and DSC P.8-2
P.8.1.2 DSC Fuel Loading P.8-3
P.8.1.3 DSC Drying and Backfilling P.8-5
P.8.1.4 DSC Sealing Operations P.8-8
P.8.1.5 TC Downending and Transfer to ISFSI P.8-9
P.8.1.6 DSC Transfer to the HSM P.8-9
P.8.1.7 Monitoring Operations P.8-11
P.8.2 Procedures for Unloading the Cask P.8-15
P.8.2.1 DSC Retrieval from the HSM P.8-15
P.8.2.2 Removal of Fuel from the DSC P.8-15
P.8.3 Identification of Subjects for Safety Analysis P.8-24
P.8.4 Fuel Handling Systems P.8-24
P.8.5 Other Operating Systems P.8-24
P.8.6 Operation Support System P.8-24
P.8.7 Control Room and/or Control Areas P.8-24
P.8.8 Analytical Sampling P.8-24
P.8.9 References P.8-25

P.9 Acceptance Tests and Maintenance Program P.9-1
P.9.1 Acceptance Tests P.9-1
P.9.1.1 Visual Inspection P.9-1
P.9.1.2 Structural Tests P.9-1
P.9.1.3 Leak Tests P.9-1
P.9.1.4 Component Tests P.9-2
P.9.1.5 Shielding Integrity Tests P.9-2
P.9.1.6 Thermal Acceptance Tests P.9-2
P.9.1.7 Poison Plate Acceptance Tests P.9-2
P.9.1.7.1 Thermal Conductivity Testing of Poison Plates P.9-2
P.9.1.7.2 B10 Areal Density Testing of Poison Plates P.9-2
P.9.2 Maintenance Program P.9-9
P.9.3 References P.9.10

P.10 Radiation Protection P.10-1
P.10.1 Occupational Exposure P.10-2
P.10.2 Off-Site Dose Calculations P.10-3
P.10.2.1 Activity Calculations P.10-5
P.10.2.2 Dose Rates P.10-6
P.10.3 References P.10-8

P.11 Accident Analyses P.11-1
P.11.1 Off-Normal Operations P.11-2
P.11.1.1 Off-Normal Transfer Loads P.11-2
P.11.1.1.1 Postulated Cause of Event P.11-2
P.11.1.1.2 Detection of Event P.11-2
P.11.1.1.3 Analysis of Effects and Consequences P.11-2
P.11.1.1.4 Corrective Actions P.11-2
P.11.1.2 Extreme Temperatures P.11-3
P.11.1.2.1 Postulated Cause of Event P.11-3
P.11.1.2.2 Detection of Event P.11-3
P.11.1.2.3 Analysis of Effects and Consequences P.11-3
P.11.1.2.4 Corrective Actions P.11-3
P.11.1.3 Off-Normal Releases of Radionuclides P.11-3
P.11.1.3.1 Postulated Cause of Event P.11-4
P.11.1.3.2 Detection of Event P.11-4
P.11.1.3.3 Analysis of Effects and Consequences P.11-4
P.11.1.3.4 Corrective Actions P.11-4
P.11.1.4 Radiological Impact from Off-Normal Operations P.11-4
P.11.2 Postulated Accidents P.11-5
P.11.2.1 Reduced HSM Air Inlet and Outlet Shielding P.11-5
P.11.2.1.1 Cause of Accident P.11-5
P.11.2.1.2 Accident Analysis P.11-5
P.11.2.1.3 Accident Dose Calculations P.11-5
P.11.2.1.4 Corrective Actions P.11-5
P.11.2.2 Earthquake P.11-6

P.11.2.2.1 Cause of Accident P.11-6
P.11.2.2.2 Accident Analysis P.11-6
P.11.2.2.3 Accident Dose Calculations P.11-6
P.11.2.2.4 Corrective Actions P.11-6
P.11.2.3 Extreme Winds and Tornado Missiles P.11-6
P.11.2.3.1 Cause of Accident P.11-6
P.11.2.3.2 Accident Analysis P.11-6
P.11.2.3.3 Accident Dose Calculations P.11-13
P.11.2.3.4 Corrective Actions P.11-13
P.11.2.4 Flood P.11-13
P.11.2.4.1 Cause of Accident P.11-13
P.11.2.4.2 Accident Analysis P.11-13
P.11.2.4.3 Accident Dose Calculations P.11-13
P.11.2.4.4 Corrective Actions P.11-14
P.11.2.5 Accidental TC Drop P.11-14
P.11.2.5.1 Cause of Accident P.11-14
P.11.2.5.2 Accident Analysis P.11-14
P.11.2.5.3 Accident Dose Calculations for Loss of Neutron Shield P.11-14
P.11.2.5.4 Corrective Action P.11-15
P.11.2.6 Lightning P.11-15
P.11.2.7 Blockage of Air Inlet and Outlet Openings P.11-15
P.11.2.7.1 Cause of Accident P.11-15
P.11.2.7.2 Accident Analysis P.11-15
P.11.2.7.3 Accident Dose Calculations P.11-15
P.11.2.7.4 Corrective Action P.11-16
P.11.2.8 DSC Leakage P.11-16
P.11.2.9 Accident Pressurization of DSC P.11-16
P.11.2.9.1 Cause of Accident P.11-16
P.11.2.9.2 Accident Analysis P.11-16
P.11.2.9.3 Accident Dose Calculations P.11-16
P.11.2.9.4 Corrective Actions P.11-16
P.11.2.10 Fire and Explosion P.11-17
P.11.2.10.1 Cause of the Accident P.11-17
P.11.2.10.2 Accident Analysis P.11-17
P.11.2.10.3 Accident Dose Calculations P.11-17
P.11.2.10.4 Corrective Actions P.11-17
P.11.3 References P.11-18

P.12 Conditions for Cask Use - Operating Controls and Limits or Technical Specifications P.12-1

P.13 Quality Assurance P.13-1

P.14 Decommissioning P.14-1

LIST OF TABLES

		Page
Table P.1-1	Key Design Parameters of the NUHOMS®-24PTH System	P.1-13
Table P.2-1	PWR Fuel Specification for the Fuel to be Stored in the NUHOMS®-24PTH DSC	P.2-19
Table P.2-2	Thermal and Radiological Characteristics for Control Components Stored in the NUHOMS® -24PTH DSC	P.2-21
Table P.2-3	PWR Fuel Assembly Design Characteristics for the NUHOMS®-24PTH DSC	P.2-22
Table P.2-4	Maximum Assembly Average Initial Enrichment v/s Neutron Poison Requirements for 24PTH DSC (Intact Fuel)	P.2-23
Table P.2-5	Maximum Assembly Average Initial Enrichment v/s Neutron Poison Requirements for 24PTH DSC (Damaged Fuel)	P.2-25
Table P.2-6	PWR Fuel Qualification Table for Zone 1 Fuel with 1.7 kW per Assembly for the NUHOMS®-24PTH DSC (Fuel w/o CCs)	P.2-26
Table P.2-7	PWR Fuel Qualification Table for Zone 2 Fuel with 2.0 kW per Assembly for the NUHOMS®-24PTH DSC (Fuel w/o CCs)	P.2-27
Table P.2-8	PWR Fuel Qualification Table for Zone 3 Fuel with 1.5 kW per Assembly for the NUHOMS®-24PTH DSC (Fuel w/o CCs)	P.2-28
Table P.2-9	PWR Fuel Qualification Table for Zone 4 Fuel with 1.3 kW per Assembly for the NUHOMS®-24PTH DSC (Fuel w/o CCs)	P.2-29
Table P.2-10	PWR Fuel Qualification Table for Zone 1 Fuel with 1.7 kW per Assembly for the NUHOMS®-24PTH DSC (Fuel w/ CCs)	P.2-30
Table P.2-11	PWR Fuel Qualification Table for Zone 2 Fuel with 2.0 kW per Assembly for the NUHOMS®-24PTH DSC (Fuel w/ CCs)	P.2-31
Table P.2-12	PWR Fuel Qualification Table for Zone 3 Fuel with 1.5 kW per Assembly for the NUHOMS®-24PTH DSC (Fuel w/ CCs)	P.2-32
Table P.2-13	PWR Fuel Qualification Table for Zone 4 Fuel with 1.3 kW per Assembly for the NUHOMS®-24PTH DSC (Fuel w/ CCs)	P.2-33
Table P.2-14	Summary of 24PTH-DSC Load Combinations	P.2-35
Table P.2-15	Summary of Stress Criteria for Subsection NB Pressure Boundary Components	P.2-39
Table P.2-16	Summary of Stress Criteria for Subsection NG Components	P.2-40
Table P.2-17	Classification of NUHOMS®-24PTH DSC Components	P.2-41
Table P.2-18	Summary of NUHOMS®-24PTH DSC and HSM-H Component Design Loadings	P.2-42
Table P.2-19	Design Pressures for Tornado Wind Loading	P.2-45
Table P.2-20	B10 Specification for the NUHOMS®-24PTH Poison Plates	P.2-45
Table P.3.1-1	Alternatives to the ASME Code for the NUHOMS®-24PTH DSC Confinement Boundary	P.3.1-8
Table P.3.1-2	Alternatives to the ASME Code for the NUHOMS®-24PTH DSC Basket Assembly	P.3.1-10
Table P.3.2-1	Summary of the NUHOMS®-24PTH System Component Nominal Weights	P.3.2-2
Table P.3.3-1	ASME Code Materials Data For SA-240 Type 304 and SA-182 Type F304 Stainless Steel	P.3.3-3
Table P.3.3-2	Materials Data For ASTM A36 Steel	P.3.3-4

Table P.3.3-3 Static Mechanical Properties for ASTM B29 Lead P.3.3-5
Table P.3.3-4 ASME Code Properties for 6061 Aluminum P.3.3-6
Table P.3.3-5 Analysis Properties for Aluminum Transition Rails P.3.3-7
Table P.3.3-6 Additional Material Properties P.3.3-8
Table P.3.3-7 Concrete Properties P.3.3-9
Table P.3.3-8 Reinforcing Steel Material Properties at Temperature P.3.3-10
Table P.3.3-9 Materials Data for ASTM A992 Steel P.3.3-11
Table P.3.4-1 Summary of Thermal Stress Results - 24PTH Basket P.3.4-12
Table P.3.4-2 Summary of Thermal Forces and Moments in the HSM-H Concrete Components P.3.4-12
Table P.3.6-1 NUHOMS® 24PTH System Normal Operating Loading Identification P.3.6-19
Table P.3.6-2 Maximum NUHOMS®-24PTH-S / 24PTH-L DSC Shell Assembly Stresses for Normal and Off-Normal Loads P.3.6-20
Table P.3.6-3 Maximum NUHOMS®-24PTH-S-LC DSC Shell Assembly Stresses for Normal and Off-Normal Loads P.3.6-21
Table P.3.6-4 NUHOMS®-24PTH Basket Model Components, Element Types and Materials P.3.6-22
Table P.3.6-5 Material Properties Used in Normal Condition 24PTH Basket Analyses P.3.6-23
Table P.3.6-6 Normal Condition Stress Summary for 24PTH Basket Components – Vertical DW/Handling Loads P.3.6-24
Table P.3.6-7 Normal Condition Stress Summary for 24PTH Basket Components Horizontal DW/Handling P.3.6-25
Table P.3.6-8 Normal Condition Fuel Compartment Tubes-to-Steel Insert Plates (Straps) Weld Loads for 24PTH Basket P.3.6-26
Table P.3.6-9 NUHOMS® Off-Normal Operating Loading Identification P.3.6-27
Table P.3.6-10 Maximum NUHOMS® HSM-H Concrete Component Forces and Moment for Normal and Off-Normal Loads P.3.6-28
Table P.3.6-11 Comparison of ANSYS Results at TC Top Lid Center P.3.6-29
Table P.3.6-12 TC Enveloping Thermal Stresses for Load Combinations P.3.6-30
Table P.3.6-13 OS197/OS197H/OS197FC TC Combined Stresses For Normal Condition Loads P.3.6-31
Table P.3.6-14 OS197/OS197H/OS197FC TC Structural Shell Stresses at TC Trunnions P.3.6-32
Table P.3.6-15 Parameters of PWR Fuel Assemblies P.3.6-33
Table P.3.6-16 Fuel Cladding Computed Stresses and Ratios to Yield Stress P.3.6-34
Table P.3.6-17 Stress Intensities of Fuel Tubes for One Foot Side Drop Load P.3.6-35
Table P.3.7-1 Maximum NUHOMS®-24PTH-S/24PTH-L DSC Stresses for Drop Accident Loads P.3.7-25
Table P.3.7-2 Maximum NUHOMS®-24PT-S-LC DSC Stresses for Drop Accident Loads P.3.7-26
Table P.3.7-3 List of Drop Condition LS-DYNA Stress Analyses of the 24PTH Basket Assembly P.3.7-27
Table P.3.7-4 Summary of Material Properties for Drop Accident Analyses of the 24PTH Basket Assembly P.3.7-28
Table P.3.7-5 24PTH Basket, Enveloping Stress Results - 75g Side Drops P.3.7-29

Table P.3.7-6 24PTH Basket, Enveloping Stress Results - 60g End Drop P.3.7-30
Table P.3.7-7 Drop Condition ANSYS Stability Analyses for the 24PTH Basket Assembly P.3.7-31
Table P.3.7-8 NUHOMS®-24PTH-S/24PTH-L DSC Enveloping Load Combination Results for Normal and Off-Normal Loads P.3.7-32
Table P.3.7-9 NUHOMS®-24PTH-S-LC DSC Enveloping Load Combination Results for Normal and Off-Normal Loads P.3.7-33
Table P.3.7-10 NUHOMS®-24PTH-S/24PTH-L DSC Enveloping Load Combination Results for Accident Loads P.3.7-34
Table P.3.7-11 NUHOMS®-24PT-S-LC DSC Enveloping Load Combination Results for Accident Loads P.3.7-35
Table P.3.7-12 NUHOMS®-24PTH-S/24PTH-L DSC Enveloping Load Combination Results for Accident Loads P.3.7-36
Table P.3.7-13 NUHOMS®-24PTH-S-LC DSC Enveloping Load Combination Results for Accident Loads P.3.7-37
Table P.3.7-14 DSC Enveloping Load Combination (Notes to Table P.3.7-8 through Table P.3.7-13 ..... P.3.7-38
Table P.3.7-15 Summary of OS197/OS197H/OS197FC TC Stresses P.3.7-39
Table P.3.7-16 HSM-H Concrete Load Combinations P.3.7-40
Table P.3.7-17 HSM-H Support Steel Structure Load Combinations P.3.7-41
Table P.3.7-18 Ultimate Capacities of Concrete Components P.3.7-42
Table P.3.7-19 Maximum NUHOMS® HSM-H Concrete Component Forces and Moments for Accident Loads P.3.7-43
Table P.3.7-20 Comparison of Highest Combined Shear Forces/Moments with the Capacities P.3.7-44
Table P.3.7-21 Maximum/Minimum Forces/Moments in the Rail Components in the Local System P.3.7-45
Table P.3.7-22 Maximum/Minimum Forces/Moments in the Rail Extension Plates in the Local System P.3.7-46
Table P.3.7-23 Maximum/Minimum Axial Forces in the Cross Member Components P.3.7-47
Table P.3.7-24 Rail Component Results P.3.7-48
Table P.3.7-25 Extension Plates and Cross Members Results P.3.7-49
Table P.4-1 Bulk Air Temperatures at Specified HSM-H Regions for the Various Cases P.4-71
Table P.4-2 HSM-H Components Normal and Off-Normal Maximum Temperatures, 40.8 kW Heat Load P.4-72
Table P.4-3 HSM-H Components Normal and Off-Normal Maximum Temperatures, 31.2 kW Heat Load P.4-73
Table P.4-4 HSM-H Components Normal and Off-Normal Maximum Temperatures, 24 kW Heat Load P.4-74
Table P.4-5 HSM-H Components Maximum Temperatures (°F), 40.8 kW Decay Heat Load, 117°F Ambient, Blocked Vent Accident (Case 9) P.4-75
Table P.4-6 Single HSM-H Components Maximum Temperatures, 40.8 kW Heat Load, -40°F Ambient, Blocked Vent Accident (Case 10) P.4-76
Table P.4-7 Summary of OS197FC Cases P.4-77

Table P.4-8 Cask DSC Gap Hydraulic Characteristics as Function of Circumferential Position P.4-78
Table P.4-9 OS197FC TC Components and DSC Shell Temperatures with 40.8 kW Decay Heat Load under Normal and Off-Normal Conditions P.4-79
Table P.4-10 OS197FC TC Components and DSC Shell Temperatures with 31.2 kW Decay Heat Load, without Aluminum Inserts under Normal and Off-Normal Conditions P.4-80
Table P.4-11 OS197FC TC Components and DSC Shell Temperatures with 31.2 kW Decay Heat Load, with Aluminum Inserts under Normal and Off-Normal Conditions P.4-81
Table P.4-12 Steady-State Temperatures for a Loss of Neutron Shield P.4-82
Table P.4-13 Fire Accident Temperatures with 40.8 kW Decay Heat Load P.4-83
Table P.4-14 Fuel Cladding Normal Condition Maximum Temperatures P.4-84
Table P.4-15 DSC Basket Assembly Maximum Normal Operating Component Temperatures; HLZC 1 (40.8 kW) P.4-85
Table P.4-16 DSC Basket Assembly Maximum Normal Operating Component Temperatures; HLZC 4 (31.2 kW) P.4-86
Table P.4-17 DSC Basket Assembly Maximum Normal Operating Component Temperatures; HLZC 5 (24 kW) P.4-87
Table P.4-18 24PTH DSC Initial Helium Fill Gas Molar Quantities P.4-88
Table P.4-19 24PTH DSC Maximum Normal Operating Condition Pressures P.4-89
Table P.4-20 Fuel Cladding Off-Normal Condition Maximum Temperatures P.4-90
Table P.4-21 DSC Basket Assembly Maximum Off-Normal Operating Component Temperatures, HLZC 1 (40.8 kW) P.4-91
Table P.4-22 DSC Basket Assembly Maximum Off-Normal Operating Component Temperatures, HLZC 4 (31.2 kW) P.4-92
Table P.4-23 DSC Basket Assembly Maximum Off-Normal Operating Component Temperatures, HLZC 5 (24 kW) P.4-93
Table P.4-24 24PTH DSC Maximum Off-Normal Operating Condition Pressures P.4-94
Table P.4-25 Fuel Cladding Accident Condition Maximum Temperatures P.4-95
Table P.4-26 DSC Basket Assembly Accident Maximum Component Temperatures; HLZC 1 (40.8 kW) P.4-96
Table P.4-27 DSC Basket Assembly Accident Maximum Component Temperatures; HLZC 4 (31.2 kW) P.4-97
Table P.4-28 DSC Basket Assembly Accident Maximum Component Temperatures; HLZC 5 (24 kW) P.4-98
Table P.4-29 24PTH DSC Maximum Accident Condition Pressures P.4-99
Table P.4-30 Vacuum Drying Fuel Cladding Maximum Temperatures (°F) P.4-100
Table P.4-31 DSC Basket Assembly Maximum Component Temperatures during Vacuum Drying, HLZC 1 (40.8 kW) P.4-101
Table P.4-32 DSC Basket Assembly Maximum Component Temperatures during Vacuum Drying, HLZC 4 (31.2 kW) P.4-102
Table P.4-33 DSC Basket Assembly Maximum Component Temperatures during Vacuum Drying, HLZC 5 (24 kW) P.4-103
Table P.4-34 24PTH-S-LC DSC Shell Temperatures for Storage in HSM Model 102 ..... P.4-104
Table P.4-35 NUHOMS®-24PTH DSC Cavity Free Volumes P.4-105

Table P.4-36 Fuel Rod Helium Fill Gas Released per DSC P.4-106
Table P.4-37 Fission Gas Released per DSC P.4-107
Table P.4-38 CC Gas Released per DSC P.4-108
Table P.4-39 24PTH-S-LC DSC Shell Maximum Temperatures during Transfer in Standardized TC with 24 kW Heat Load P.4-109
Table P.4-40 Comparison Of Peak Component Temperatures For 117°F Ambient With 40.8 kW Decay Heat Load P.4-110
Table P.4-41 Maximum Normal and Off-Normal OS197 TC Component Temperatures with 40.8 kW Decay Heat Load (with Air Circulation) P.4-111
Table P.4-42 Maximum Normal and Off-Normal OS197 TC Component Temperatures with 31.2 kW Decay Heat Load (with Air Circulation) P.4-112
Table P.4-43 HSM-H Concrete and DSC Shell temperatures with and without Side Heat Shield Fins P.4-113
Table P.5-1 Summary of NUHOMS®-24PTH-L DSC in HSM-H, Maximum and Average Dose Rates, Configuration 2 ..... P.5-65
Table P.5-2 Summary of NUHOMS®-24PTH-S-LC DSC in HSM-Model 102, Maximum and Average Dose Rates, Configuration 5 ..... P.5-66
Table P.5-3 Summary of NUHOMS®-24PTH-L DSC, OS197FC TC Maximum Dose Rates During Transfer Operations, Configuration 2 ..... P.5-67
Table P.5-4 Summary of NUHOMS®-24PTH-L DSC, OS197FC TC Maximum Dose Rates During Decontamination and Welding Operations, Configuration 2 ..... P.5-68
Table P.5-5 Summary of NUHOMS®-24PTH-S-LC DSC, Standardized TC Maximum Dose Rates During Transfer Operations, Configuration 5 ..... P.5-69
Table P.5-6 PWR Fuel Assembly Material Mass P.5-70
Table P.5-7 Elemental Composition of LWR Fuel-Assembly Structural Materials P.5-71
Table P.5-8 Flux Scaling Factors By Fuel Assembly Region P.5-72
Table P.5-9 Gamma and Neutron Source Term for 2.0 kW Fuel in TC (62 GWd/MTU, 3.4 wt. % U-235 and 5.6-Year Cooled Fuel) P.5-73
Table P.5-10 Gamma and Neutron Source Term for 2.0 kW Fuel in HSM-H (41 GWd/MTU, 3.3 wt. % U-235 and 3.0-Year Cooled Fuel) P.5-74
Table P.5-11 Gamma and Neutron Source Term for 1.5 kW Fuel in TC or HSM (32 GWd/MTU, 2.6 wt. % U-235 and 3.0-Year Cooled Fuel) P.5-75
Table P.5-12 Design-Basis CC Source Terms P.5-76
Table P.5-13 Source Term Peaking Factor Summary P.5-77
Table P.5-14 Shielding Material Densities P.5-78
Table P.5-15 Material Densities for Fuel/Basket Region Used in ANISN Models P.5-79
Table P.5-16 Neutron Source for ANISN Calculation P.5-80
Table P.5-17 ANISN Response Function for the OS197FC TC P.5-81
Table P.5-18 ANISN Response Function for the HSM-H P.5-82
Table P.5-19 Flux to Dose Rate Conversion Factors P.5-83
Table P.5-20 Gamma and Neutron Macroscopic Cross Sections P.5-84
Table P.5-21 Surface Average Dose Rates on HSM-Model 102 with 24PTH-S-LC DSC P.5-85
Table P.5-22 Maximum Dose Rates on HSM-Model 102 with 24PTH-S-LC DSC P.5-86
Table P.5-23 OS917FC TC Total Dose Rates (mrem/hr) at Cask Centerline for 2.0 kW Case P.5-87

Table P.5-24 HSM-H Total Dose Rates (mrem/hr) at Roof for 2.0 kW Case[1] P.5-88
Table P.5-25 OS197FC TC Total Dose Rates (mrem/hr) at Cask Centerline for 1.5 kW Case P.5-89
Table P.5-26 HSM-H Total Dose Rates (mrem/hr) at Roof for 1.5 kW Case P.5-90
Table P.6-1 Minimum B10 Content in the Neutron Poison Plates P.6-88
Table P.6-2 Authorized Contents for NUHOMS®-24PTH System P.6-89
Table P.6-3 Maximum Assembly Average Initial Enrichment for Each Configuration (Intact Fuel) P.6-90
Table P.6-4 Maximum Assembly Average Initial Enrichment for Each Configuration (Damaged Fuel) P.6-92
Table P.6-5 Parameters For PWR Assemblies P.6-93
Table P.6-6 NUHOMS®-24PTH Basket Dimensions P.6-95
Table P.6-7 Description of the Basic KENO Model Units for Intact Fuel P.6-96
Table P.6-8 Material Property Data P.6-97
Table P.6-9 Most Reactive Fuel Type Evaluation Results P.6-98
Table P.6-10 Transition Rail Material Evaluation Results P.6-100
Table P.6-11 Fuel Clad OD Thickness Evaluation Results P.6-101
Table P.6-12 Poison Plate Thickness Evaluation Results P.6-102
Table P.6-13 Fuel compartment tube Width Evaluation Results P.6-103
Table P.6-14 Fuel compartment tube Thickness Evaluation Results P.6-104
Table P.6-15 B&W 15x15 Class Assembly without CCs Final Results P.6-105
Table P.6-16 B&W 15x15 Class Assembly with CCs Final Results P.6-112
Table P.6-17 B&W 15x15 Class Assembly BORAL® Poison Results P.6-115
Table P.6-18 CE 14x14 Class Assembly without CCs Final Results P.6-116
Table P.6-19 CE 14x14 Class Assembly With CCs Final Results P.6-118
Table P.6-20 CE 15x15 Class Assembly without CCs Final Results P.6-119
Table P.6-21 CE 16x16 Class Assembly without CCs Final Results P.6-125
Table P.6-22 WE 14x14 Class Assembly without CCs Final Results P.6-127
Table P.6-23 WE 15x15 Class Assembly without CCs Final Results P.6-128
Table P.6-24 WE 15x15 Class Assembly with CCs Final Results P.6-134
Table P.6-25 WE 17x17 Class Assembly without CCs Final Results P.6-137
Table P.6-26 WE 17x17 Class Assembly with CCs Final Results P.6-144
Table P.6-27 Summary of Maximum k_{eff} for Each Fuel Assembly Class Final Results P.6-147
Table P.6-28 Key Parameters Utilized in the Damaged Assembly Calculations P.6-148
Table P.6-29 Rod Pitch Study Results P.6-149
Table P.6-30 Optimum Rod Pitch with Addition and Deletion of Rods P.6-155
Table P.6-31 Single Ended Shear Evaluation Results P.6-159
Table P.6-32 Double Ended Shear Break Evaluation Results P.6-163
Table P.6-33 Evaluation of Shifting of Fuel Rods beyond Poison P.6-165
Table P.6-34 Comparison of Various Damaged Assembly Configurations P.6-166
Table P.6-35 Dancoff Factor Calculation Results P.6-167
Table P.6-36 Damaged Assembly/Intact Assembly Final Results P.6-170
Table P.6-37 Criticality Results for Intact Fuel Assemblies with 23.145" "Egg-Crate" P.6-174
Table P.6-38 Criticality Results for Damaged Fuel Assemblies with with 23.145" "Egg-Crate" P.6-175

Table P.6-39 Summary of Criticality Results for Intact Fuel Assemblies P.6-176
Table P.6-40 Summary of Criticality Results for Damaged Fuel Assemblies P.6-177
Table P.6-41 Benchmarking Results P.6-178
Table P.6-42 USL-1 Results P.6-182
Table P.6-43 USL Determination for Criticality Analysis P.6-183
Table P.9-1 B10 Specification for the NUHOMS®-24PTH Poison Plates P.9-11
Table P.10-1 Occupational Exposure Summary, 24PTH System P.10-9
Table P.10-2 Total Annual Exposure, 24PTH-L Within HSM-H P.10-10
Table P.10-3 Total Annual Exposure, 24PTH-S-LC Within HSM-Model 102 ..... P.10-11
Table P.10-4 HSM-H/HSM-Model 102 Gamma-Ray Spectrum Calculation Results P.10-12
Table P.10-5 HSM-H/HSM-Model 102 Neutron Spectrum Calculation Results P.10-13
Table P.10-6 Summary of ISFSI Surface Activities, 24PTH-L DSC Within HSM-H P.10-14
Table P.10-7 Summary of ISFSI Surface Activities, 24PTH-S-LC DSC Within HSM-Model 102 ..... P.10-15
Table P.10-8 MCNP Front Detector Dose Rates for 2x10 Array, 24PTH-L DSC Within HSM-H P.10-16
Table P.10-9 MCNP Back Detector Dose Rates for the Two 1x10 Arrays, 24PTH-L DSC Within HSM-H P.10-17
Table P.10-10 MCNP Side Detector Dose Rates, 24PTH-L DSC Within HSM-H P.10-18
Table P.10-11 MCNP Front Detector Dose Rates for 2x10 Array, 24PTH-S-LC DSC Within HSM-Model 102 ..... P.10-19
Table P.10-12 MCNP Back Detector Dose Rates for the Two 1x10 Arrays, 24PTH-S-LC DSC Within HSM-Model 102 ..... P.10.20
Table P.10-13 MCNP Side Detector Dose Rates, 24PTH-S-LC DSC Within HSM-Model 102 ..... P.10.21
Table P.11-1 Comparison of Total Dose Rates for HSM-H Loaded with 24PTH-S-LC, with and without Adjacent HSM Shielding Effects P.11-19
Table P.11-2 Calculated Accident Dose Rates on the Side of the OS197FC TC and Standardized TC P.11-20

LIST OF FIGURES

		Page
Figure P.1-1	NUHOMS®-24PTH DSC Components	P.1-14
Figure P.1-2	Disassembled View of the NUHOMS® 24PTH DSC Basket	P.1-15
Figure P.1-3	NUHOMS® HSM-H Schematic	P.1-16
Figure P.1-4	Schematic View of the HSM-H—Support Structure	P.1-17
Figure P.1-5	NUHOMS® OS197FC TC Top Lid (Bottom View)	P.1-18
Figure P.1-6	NUHOMS® Cask Support Skid for OS197FC TC	P.1-19
Figure P.2-1	Heat Load Zoning Configuration No. 1 for 24PTH-S and 24PTH-L DSCs (with or without Control Components)	P.2-46
Figure P.2-2	Heat Load Zoning Configuration No. 2 for 24PTH-S and 24PTH-L DSCs (with or without Control Components)	P.2-47
Figure P.2-3	Heat Load Zoning Configuration No. 3 for 24PTH-S and 24PTH-L DSCs (with or without Control Components)	P.2-48
Figure P.2-4	Heat Load Zoning Configuration No. 4 for 24PTH-S and 24PTH-L DSCs (with or without Control Components)	P.2-49
Figure P.2-5	Heat Load Zoning Configuration No. 5 for 24PTH-S-LC DSC (with or without Control Components)	P.2-50
Figure P.2-6	Location of Damaged Fuel Inside 24PTH DSC	P.2-51
Figure P.2-7	24PTH-S and 24PTH-L DSC Pressure Boundary	P.2-52
Figure P.2-8	24PTH-S–LC DSC Pressure Boundary	P.2-53
Figure P.3.1-1	24PTH-S and 24PTH-L DSC Pressure Boundary	P.3.1-12
Figure P.3.1-2	24PTH-S-LC DSC Pressure Boundary	P.3.1-13
Figure P.3.4-1	Potential Versus pH Diagram for Aluminum-Water System	P.3.4-13
Figure P.3.4-2	Applied Bounding Temperatures for Thermal Stress Analysis of 24PTH DSC	P.3.4-14
Figure P.3.6-1	24PTH-S / 24PTH-L DSC Shell Assembly Top End 90° Analytical Model	P.3.6-36
Figure P.3.6-2	24PTH-S / 24PTH-L DSC Shell Assembly Bottom End 90° Analytical Model	P.3.6-37
Figure P.3.6-3	Partial View of 24PTH-S / 24PTH-L DSC Shell Assembly Bottom End 180° Analytical Model Showing End Plates and Grapple Assembly	P.3.6-38
Figure P.3.6-4	24PTH-S-LC DSC Shell Assembly Axisymmetric Analysis ANSYS Model	P.3.6-39
Figure P.3.6-5	24PTH-S-LC DSC Shell Assembly Top and Bottom End 3D ANSYS Models	P.3.6-40
Figure P.3.6-6	24PTH Basket LS-DYNA Stress Analysis Model	P.3.6-41
Figure P.3.6-7	24PTH Basket LS-DYNA Finite Element Stress Analysis Model	P.3.6-42
Figure P.3.6-8	24PTH Basket Model Showing Fuel Compartment Tubes, Steel Insert Plates (Straps), and R45 Transition Rails	P.3.6-43
Figure P.3.6-9	24PTH Basket LS-DYNA Model Analyses Results – Deadweight Stresses	P.3.6-44
Figure P.3.6-10	24PTH Basket LS DYNA Model Analysis Results – Thermal Stresses	P.3.6-45
Figure P.3.6-11	OS197FC TC Top Lid (1/32 Segment) ANSYS Models with (Top View) and without (Bottom View) Vent Cutouts	P.3.6-46

Figure P.3.6-12 Detailed View of TC Lid Model without (Top View) and with (Bottom View) Vent Cutouts P.3.6-47
Figure P.3.6-13 OS197FC TC Temperature Distribution for 40.8 kW with Air Circulation P.3.6-48
Figure P.3.6-14 OS197FC TC Temperature Distribution for 31.2 kW without Air Circulation P.3.6-49
Figure P.3.6-15 OS197FC TC Thermal Stress Analysis Model P.3.6-50
Figure P.3.6-16 OS197FC TC Thermal Stress Analysis Results for 40.8 kW with Air Circulation P.3.6-51
Figure P.3.6-17 OS197FC TC Thermal Stress Analysis Results for 31.2 kW without Air Circulation P.3.6-52
Figure P.3.6-18 Geometry Model #1: Central Crack in Finite Width Under Tension P.3.6-53
Figure P.3.6-19 Geometry Model #2: Through-Wall Circumferential Crack in Cylinder Under Bending P.3.6-54
Figure P.3.7-1 DSC Lift-Off Evaluation P.3.7-50
Figure P.3.7-2 0° Side Drop Stresses, 24PTH Basket (TC Support Rails at ±18.5°) P.3.7-51
Figure P.3.7-3 45° Side Drop Stresses, 24PTH Basket (TC Support Rails at ±18.5°) P.3.7-52
Figure P.3.7-4 24PTH Basket LS-DYNA Stability Analysis Model (TC Support Rails at ±18.5°) P.3.7-53
Figure P.3.7-5 0° Drop Stability Analysis- Displaced Shape at 172g P.3.7-54
Figure P.3.7-6 Displacement Time History for 0° Drop Stability Analysis (TC Support Rails at ±18.5°)) P.3.7-55
Figure P.3.7-7 45° Drop Stability Analysis - Resultant Displacements at 158g P.3.7-56
Figure P.3.7-8 Displacement Time History for 45° Drop Stability Analysis P.3.7-57
Figure P.3.7-9 180° Drop Stability Analysis – Displaced Shape at 167g P.3.7-58
Figure P.3.7-10 Displacement Time History for 180° Drop Stability Analysis P.3.7-59
Figure P.3.7-11 ANSYS Model of the HSM-H for Stress Analysis P.3.7-60
Figure P.3.7-12 ANSYS Model of the DSC and the DSC Support Structure P.3.7-61
Figure P.3.7-13 Symbolic Notations of Force and Moment Capacities (Also for Computed Forces and Moments) P.3.7-62
Figure P.3.7-14 Components of HSM-H Support Structure P.3.7-63
Figure P.4-1 HSM-H Air Flow Diagram P.4-114
Figure P.4-2 Convection Regions around 24PTH DSC in the HSM-H P.4-115
Figure P.4-3 24PTH DSC Shell Assembly in HSM-H Finite Element Model P.4-116
Figure P.4-4 Single HSM-H with 24PTH DSC Shell Assembly Finite Element Model P.4-117
Figure P.4-5 HSM-H with 24PTH DSC Finite Element Model for Blocked Vent Analysis P.4-118
Figure P.4-6 Temperature Distribution in HSM-H and 24PTH-S-LC DSC Shell Assembly, 24 kW Heat Load, 117°F Ambient P.4-119
Figure P.4-7 Temperature Distribution in HSM-H and 24PTH-S-LC DSC Shell Assembly, 24 kW Heat Load, -40°F Ambient P.4-120
Figure P.4-8 Temperature Distribution in HSM-H and 24PTH-S or -L DSC Shell Assembly, 31.2 kW Heat Load, 117°F Ambient P.4-121
Figure P.4-9 Temperature Distribution in HSM-H and 24PTH-S or -L DSC Shell Assembly, 31.2 kW Heat Load, -40°F Ambient P.4-122

Figure P.4-10 Temperature Distribution in HSM-H, Heat Shield, Support Rail, and 24PTH-S or –L DSC Shell Assembly, 31.2 kW Heat Load, without Fins on the Side Heat Shield, 117°F Ambient P.4-123
Figure P.4-11 Temperature Distribution in HSM-H, Heat Shield, Support Rail, and 24PTH-S or –L DSC Shell Assembly, 40.8 kW Heat Load, 117°F Ambient P.4-124
Figure P.4-12 Temperature Distribution in HSM-H, Heat Shield, Support Rail, and 24PTH-S or –L DSC Shell Assembly, 40.8 kW Heat Load, 100°F Ambient P.4-125
Figure P.4-13 Temperature Distribution in HSM-H and 24PTH DSC Shell Assembly, 40.8 kW Heat Load, -40°F Ambient P.4-126
Figure P.4-14 Temperature Distribution in HSM-H and 24PTH DSC Shell Assembly, 40.8 kW heat load, at 38.5 (typical) hours of Blocked vent, 117°F ambient P.4-127
Figure P.4-15 Temperature-Time Histories of HSM-H Model Components during Blocked Vents Accident Case, 40.8 kW, 117°F Ambient P.4-128
Figure P.4-16 Temperature Distribution in a Single HSM-H and 24PTH DSC Shell Assembly, 40.8 kW Heat Load, -40°F Ambient, Maximum Temperature Gradients through Concrete Walls P.4-129
Figure P.4-17 Temperature Distribution in a Single HSM-H, 40.8 kW Heat Load, -40°F Ambient, Maximum Temperature Gradients through Concrete Walls. Blocked Vent Transient at 38.5 Hours P.4-130
Figure P.4-18 Plan & Elevation Views of Short and Long Canister Spacers P.4-131
Figure P.4-19 OS197FC TC Lid With Slots For Air Exhaust P.4-132
Figure P.4-20 Perspective View of OS197FC TC Assembly Thermal Model P.4-133
Figure P.4-21 Perspective View of Thermal Model for Closure Lid, TC Cover, Neutron Shield, and TC Spacer P.4-134
Figure P.4-22 Perspective View of Thermal Model For DSC Shell & Ends Used For Steady-State Analyses P.4-135
Figure P.4-23 Perspective View of Thermal Model For DSC Shell, Ends, & Basket Used For Transient Analyses in OS197FC TC P.4-136
Figure P.4-24 Temperature Distribution at 11.5 hours for OS197FC TC during Transfer of 24PTH DSC, 40.8 kW Heat Load and 117°F Ambient P.4-137
Figure P.4-25 Temperature Distribution at 11.5 hours for 24PTH DSC Shell Assembly during Transfer in OS197FC TC, 40.8 kW Heat Load and 117°F Ambient P.4-138
Figure P.4-26 Temperature Distribution at 28.3 hours for OS197FC TC during Transfer of 24PTH DSC, 31.2 kW Heat Load and 117°F Ambient P.4-139
Figure P.4-27 Temperature Distribution at 28.3 hours for 24PTH DSC Shell Assembly during Transfer in OS197FC TC, 31.2 kW Heat Load and 117°F Ambient P.4-140
Figure P.4-28 Transient Temperature Response during Loading of 24PTH DSC with 40.8 kW into OS197FC TC, 100°F without Insolation (Cask Vertical) P.4-141

Figure P.4-29 Transient Temperature Response during Loading of 24PTH DSC with 31.2 kW into OS197FC TC, 100°F without Insolation (Cask Vertical) P.4-142
Figure P.4-30 Transient Temperature Response during Transfer of 24PTH DSC with 40.8 kW into OS197FC TC, 100°F with Insolation (Cask Horizontal) P.4-143
Figure P.4-31 Transient Temperature Response during Transfer of 24PTH DSC with 40.8 kW into OS197FC TC and Loss of Air Circulation Accident (Cask Horizontal) P.4-144
Figure P.4-32 Transient Temperature Response during Transfer of 24PTH DSC with 31.2 kW into OS197FC TC and Loss of Air Circulation Accident (Cask Horizontal) P.4-145
Figure P.4-33 Loss of Neutron Shield and Air Circulation (if used) Accident Transient Temperature Response with 40.8 kW (Cask Horizontal) P.4-146
Figure P.4-34 Loss of Neutron Shield and Air Circulation (if used) Accident Transient Temperature Response with 31.2 kW (Cask Horizontal) P.4-147
Figure P.4-35 24PTH DSC in OS197FC TC Fire Accident Transient Response with 40.8 kW P.4-148
Figure P.4-36 24PTH-S and 24PTH-L DSC, HLZC 1, 40.8 kW Maximum Decay Heat P.4-149
Figure P.4-37 24PTH-S and 24PTH-L DSC HLZC 4, 31.2 kW Maximum Decay Heat P.4-150
Figure P.4-38 24PTH-S-LC DSC HLZC 5, 24 kW Maximum Decay Heat P.4-151
Figure P.4-39 24PTH DSC Thermal ANSYS Model P.4-152
Figure P.4-40 24PTH DSC Thermal ANSYS Model, Basket Components P.4-153
Figure P.4-41 Temperature Distribution in 24PTH DSC for 100°F Transfer Case with HLZC 4 ..... P.4-154
Figure P.4-42 Maximum Fuel Temperatures during Vacuum Drying Transient with Air for HLZCs 1, 4, and 5 ..... P.4-155
Figure P.4-43 Finite Element Model of B&W 15x15 Fuel Assembly P.4-156
Figure P.4-44 Axial Fuel Effective Thermal Conductivity, All Fuels P.4-157
Figure P.4-45 Axial Fuel Effective Thermal Conductivity, B&W 15x15 Fuel Types P.4-158
Figure P.4-46 Fuel Transverse Effective Thermal Conductivity in Helium, All Fuels P.4-159
Figure P.4-47 Fuel Transverse Effective Thermal Conductivity in Vacuum, All Fuels P.4-160
Figure P.4-48 Fuel Transverse Effective Thermal Conductivity in Helium, B&W 15x15 Fuels P.4-161
Figure P.4-49 Fuel Transverse Effective Thermal Conductivity in Vacuum, B&W 15x15 Fuels P.4-162
Figure P.4-50 Gaps Used in the 24PTH DSC ANSYS Model P.4-163
Figure P.4-51 Elevation View Of Model Layout P.4-164
Figure P.4-52 Isometric View Of Model Layout P.4-164
Figure P.4-53 Model View From Underside Of HSM-H P.4-165
Figure P.4-54 DSC Within HSM-H P.4-166
Figure P.4-55 Perspective View Of Meshing At X-Y Plane Of HSM-H P.4-167
Figure P.5-1 ANISN HSM-H Model P.5-91

Figure P.5-2 ANISN OS197FC TC Model P.5-92
Figure P.5-3 24PTH-L DSC Within HSM-H, Side View at Centerline of DSC P.5-93
Figure P.5-4 24PTH-L DSC Within HSM-H, Head-on View at X=0 ..... P.5-94
Figure P.5-5 24PTH-L DSC Within HSM-H, Head-on View Showing Top Vents P.5-95
Figure P.5-6 24PTH-L DSC Within HSM-H, Head-on View at Lid End of DSC (X=225 cm) P.5-96
Figure P.5-7 24PTH-L DSC Within HSM-H, Head-on View at Bottom End of DSC (X=-225 cm) P.5-97
Figure P.5-8 24PTH-L DSC Within OS197FC TC, Axial View of Transfer Model P.5-98
Figure P.5-9 24PTH-L DSC Within OS197FC TC, Top View of Transfer Model Showing Cask Lid with Gap, Top Nozzle, and Plenum P.5-99
Figure P.5-10 24PTH-L DSC Within OS197FC TC, Bottom View of Transfer Model Showing Cask Bottom and Bottom Nozzle P.5-100
Figure P.5-11 24PTH-L DSC Within OS197FC TC, Radial Cut View of Transfer Models Showing Fuel Locations P.5-101
Figure P.5-12 24PTH-S-LC DSC Within Standardized TC, Axial View of Transfer Model P.5-102
Figure P.5-13 24PTH-S-LC DSC Within Standardized TC, Top View of Transfer Model Showing Cask Lid with Gap, Top Nozzle, and Plenum P.5-103
Figure P.5-14 24PTH-S-LC DSC Within Standardized TC, Bottom View of Transfer Model Showing Cask Bottom and Bottom Nozzle P.5-104
Figure P.5-15 24PTH-S-LC DSC Within Standardized TC, Radial Cut Views of Transfer Model Showing Fuel Locations P.5-105
Figure P.5-16 HSM-H with 24PTH-L DSC, Front Door Centerline Dose Rate P.5-106
Figure P.5-17 HSM-H with 24PTH-L DSC, Roof Centerline Dose Rate P.5-107
Figure P.5-18 HSM-H with 24PTH-L DSC, Side Shield Wall Surface at DSC Centerline Dose Rate P.5-108
Figure P.5-19 OS197FC TC with 24PTH-L DSC, Side Surface Dose Rate P.5-109
Figure P.5-20 OS197FC TC with 24PTH-L DSC, Top Surface Dose Rate P.5-110
Figure P.5-21 OS197FC TC with 24PTH-L DSC, Bottom Surface Dose Rate P.5-111
Figure P.5-22 Standardized Transfer Cask with 24PTH-S-LC DSC, Side Surface Dose Rate P.5-112
Figure P.5-23 Standardized Cask with 24PTH-S-LC DSC, Top Surface Dose Rate P.5-113
Figure P.5-24 Standardized Cask with 24PTH-S-LC DSC, Bottom Surface Dose Rate P.5-114
Figure P.6-1 NUHOMS®-24PTH DSC Cross Section P.6-184
Figure P.6-2 Basket Views and Dimensions P.6-185
Figure P.6-3 Basket Model Compartment Wall (View G) P.6-186
Figure P.6-4 Basket Model Compartment Wall (View F) P.6-187
Figure P.6-5 Basket Model Compartment Wall With Fuel Assembly (View G) P.6-188
Figure P.6-6 Basket Model Compartment Wall With Fuel Assembly (View F) P.6-189
Figure P.6-7 Basket Compartment With Fuel Assembly (Section A) P.6-190
Figure P.6-8 Basket Compartment With Fuel Assembly (Section B) P.6-191
Figure P.6-9 Fuel Position and Poison Plate Location in the 24PTH DSC Design P.6-192
Figure P.6-10 Fuel Position and Poison Plate Location in the KENO Model of 24PTH DSC P.6-193

Figure P.6-11 KENO V.a UNits and Radial Cross Sections of the Model of 24PTH DSC P.6-194
Figure P.6-12 Exxon 15x15 Fuel Assembly with Radial Variation in Enrichment P.6-195
Figure P.6-13 B&W 15x15 Class Assembly KENO Model P.6-196
Figure P.6-14 CE 14x14 Class Assembly KENO Model P.6-197
Figure P.6-15 CE 15x15 Class Assembly KENO Model P.6-198
Figure P.6-16 CE 16x16 Class Assembly KENO Model P.6-199
Figure P.6-17 WE 14x14 Class Assembly KENO Model P.6-200
Figure P.6-18 WE 15x15 Class Assembly KENO Model P.6-201
Figure P.6-19 WE 17x17 Class Assembly KENO Model P.6-202
Figure P.6-20 WE 14x14 Class Assembly, Single Shear Study Model P.6-203
Figure P.6-21 CE 16x16 Class Assembly, Double Shear Study Model P.6-204
Figure P.6-22 CE 14x14 Class Assembly, 8 Damaged / 16 Intact Fuel Assemblies P.6-205
Figure P.6-23 WE 15x15 Class Assembly, 12 Damaged / 12 Intact Fuel Assemblies P.6-206
Figure P.6-24 Basket Model Compartment Wall (View G) P.6-207
Figure P.6-25 Basket Model Compartment Wall (View F) P.6-208
Figure P.8-1 NUHOMS® System Loading Operations Flow Chart P.8-12
Figure P.8-2 NUHOMS® System Retrieval Operations Flow Chart P.8-21
Figure P.10-1 Annual Exposure from the ISFSI as a Function of Distance, 24PTH-L DSC Within HSM-H P.10-22
Figure P.10-2 Annual Exposure from the ISFSI as a Function of Distance, 24PTH-S-LC DSC Within HSM-Model 102 ..... P.10-23
Figure P.11-1 HSM-H Dimensions for Missile Impact Stability Analysis P.11-21

P.1 General Discussion

This Appendix to the NUHOMS® Final Safety Analysis Report (FSAR) addresses the Important to Safety aspects of adding the NUHOMS®-24PTH system to the Standardized NUHOMS® system described in the FSAR.

The NUHOMS®-24PTH system is a modular canister based spent fuel storage and transfer system, similar to the Standardized NUHOMS®-24P system described in the FSAR. The NUHOMS®-24PTH system consists of the following new or modified components:

- A new dual purpose (Storage/Transportation) Dry Shielded Canister (DSC), with three alternate configurations, designated as DSC Type NUHOMS®-24PTH-S, -24PTH-L, and -24PTH-S-LC,

- A new 24PTH DSC basket design, which is provided with two alternate options: with aluminum inserts (Type 1) or without aluminum inserts (Type 2) as shown in Figure P.1-1. In addition, depending on the boron content in the basket poison plates, each basket type is designated as Type A (low B10), Type B (moderate B10) or Type C (high B10) which results in six different basket types (Type 1A, 1B, 1C, 2A, 2B, or 2C),

- A modified version of the Standardized Horizontal Storage Module (HSM) Model 102 described in the FSAR, designated as HSM-H, equipped with special design features which provide enhanced shielding and heat rejection capabilities, and

- The OS197/OS197H Transfer Cask (TC) described in the FSAR, is provided with an optional modified top lid to allow air circulation through the TC/DSC annulus during transfer operations at certain heat loads when time limits for transfer operations cannot be satisfied. The OS197/OS197H TC with a modified top lid is designated as OS197FC TC.

The 24PTH DSC is designed to accommodate up to 24 intact (or up to 12 damaged and balance intact) PWR fuel assemblies, with characteristics as described in Chapter P.2. The 24PTH-S and 24PTH-L are the short and long cavity configurations of the 24PTH DSC designed for a maximum heat load of 40.8 kW. They are transferred to the ISFSI for storage in the HSM-H in either the OS197/OS197H or OS197FC TC depending upon the heat load.

The 24PTH-S-LC DSC is a modified version of 24PTH-S DSC, provided with thinner top and bottom lead shield plugs instead of steel, resulting in a longer cavity length. This DSC type is designed for a maximum heat load of 24 kW per DSC and may be stored in either the currently licensed Standardized HSM Model 102, or in the new HSM-H, while the currently licensed Standardized TC (with a solid neutron shield) is used for onsite transfer.

Fuel assemblies with Control Components are to be stored only in 24PTH-L and 24PTH-S-LC DSC Types, due to their longer cavity length.

These three alternate NUHOMS®-24PTH System configurations are summarized below:

System Configuration	24PTH DSC Type	Basket Type	Max. Heat Load (kW) per DSC	Transfer Cask	Storage Module
1	24PTH-S or 24PTH-L(1)	1A, 1B, or 1C(2)	40.8	OS197FC	HSM-H
			31.2	OS197/ OS197H	HSM-H
2	24PTH-S or 24PTH-L(1)	2A, 2B, or 2C(3)	31.2	OS197FC	HSM-H
3	24PTH-S-LC(1)	2A, 2B, or 2C(3)	24.0	Standardized TC (solid neutron shield)	HSM (Model 102) or HSM-H

(1) Allows storage of Control Components
(2) With heat conductive aluminum inserts in the R45 basket transition rail
(3) With no heat conductive aluminum inserts in the R45 basket transition rail

The NUHOMS®-24PTH system provides structural integrity, confinement, shielding, criticality control and passive heat removal independent of any other facility structures or components.

The format of this Appendix follows the guidance provided in NRC Regulatory Guide 3.61 [1.1]. The analysis presented in this Appendix shows that the NUHOMS®-24PTH system meets all the requirements of 10CFR72 [1.2]. A separate analysis will be submitted to address the safety related aspects of transporting spent fuel in the NUHOMS®-24PTH DSC in accordance with 10CFR71 [1.3].

Several sections of this Appendix have been identified as "No change". For these sections, the description or analysis presented in the corresponding sections of the FSAR for the Standardized NUHOMS® system is also applicable to the 24PTH system. In addition, Tables and Figures presented in the FSAR which remain unchanged due to the addition of the 24PTH system to the Standardized NUHOMS® system are not repeated in this Appendix.

Note: References to sections or chapters within this Appendix are identified with a prefix P (e.g., Section P.2.3 or Chapter P.2). References to sections or chapters of the FSAR outside of this Appendix (main body of the FSAR) are identified with the applicable FSAR section or chapter number (e.g., Section 2.3 or Chapter 2). The references used in this appendix are identified as [X.X] (e.g., [1.1] is reference 1.1 at the end of Section P.1).

P.1.1 Introduction

The NUHOMS®-24PTH system is designed to store up to 24 intact (including reconstituted) B&W 15x15, WE 17x17, CE 15x15, WE 15x15, CE 14x14, and WE 14x14 class PWR fuel assemblies. The fuel to be stored is limited to a maximum assembly average initial enrichment of 5.0 wt. %, a maximum assembly average burnup of 62 GWd/MTU, and a minimum cooling time of 3.0 years. The long cavity 24PTH-L and 24PTH-S-LC DSC types are also designed to store up to 24 Control Components (CCs) which include Burnable Poison Rod Assemblies (BPRAs), Thimble Plug Assemblies (TPAs), Control Rod Assemblies (CRAs), Axial Power Shaping Rod Assemblies (APSRAs), Orifice Rod Assemblies (ORAs), and Neutron Source Assemblies (NSAs). The design characteristics, including physical and radiological parameters of the payload, are described in Chapter P.2.

Reconstituted assemblies containing up to 10 replacement stainless steel rods per assembly or unlimited number of lower enrichment UO_2 rods instead of Zircaloy clad enriched UO_2 rods are acceptable for storage in 24PTH DSC as intact fuel assemblies with a slightly longer cooling time than that required for a standard assembly. The maximum number of reconstituted fuel assemblies per DSC is four.

Provisions have been made for storage of up to 12 damaged fuel assemblies in lieu of an equal number of intact assemblies in cells located at the outer edge of the 24PTH basket. Damaged PWR fuel assemblies are assemblies containing missing or partial fuel rods or fuel rods with known or suspected cladding defects greater hairline cracks or pinhole leaks. The DSC basket cells which store damaged fuel assemblies are provided with top and bottom end caps to assure retrievability.

The NUHOMS®-24PTH system consists of the following new or modified components:

- A 24PTH DSC, with three alternate configurations, described in detail in Section P.1.2, provides confinement, an inert environment, structural support, and criticality control for the 24 PWR fuel assemblies,
- A HSM-H module, described in Section P.1.2, is provided for environmental protection, shielding and heat rejection during storage, and
- OS197-FC transfer cask for onsite transfer of the 24PTH-S and 24PTH-L DSCs. The NUHOMS®-24PTH-S and 24PTH-L DSCs with Types 1A, 1B, 1C baskets can also be transferred in the OS197/OS197H TCs if the total heat load is 31.2 kW or less.

In addition to these new or modified components listed above, the 24PTH-S-LC DSC requires the use of the existing Standardized HSM Model 102 or the new HSM-H for storage and the Standardized Transfer Cask for transfer.

The NUHOMS®-24PTH system requires the use of non-safety related auxiliary transfer equipment described in Section 1.3.2.2 of the FSAR. There is no change to any of these items except for the cask support skid. The cask support skid is modified by adding two industrial grade motor driven redundant blowers with associated ductwork for connecting to the TC ram

cover plate opening. This modification provides a reliable source of external air circulation for the OS197FC TC.

Approval of the NUHOMS®-24PTH system components described in Chapter P.1.2 is sought under the provisions of 10CFR 72, Subpart l for use under the general license provisions of 10CFR 72, Subpart K. The 24PTH system components are intended for storage on a reinforced concrete pad.

P.1.2 General Description of the NUHOMS®-24PTH System

P.1.2.1 NUHOMS®-24PTH System Characteristics

P.1.2.1.1 NUHOMS®-24PTH DSC

Each NUHOMS®-24PTH DSC consists of a DSC shell assembly (cylindrical shell, canister bottom and top cover plates and shield plugs or shield plug assemblies) and a basket assembly. A sketch of the NUHOMS®-24PTH DSC components is shown in Figure P.1-1.

The 24PTH DSC is provided with three alternate configurations depending on the DSC shell assembly length and DSC cavity length shown in Table P.1-1.

These three DSC design configurations allow flexibility to accommodate the payload fuel types and control components described in Section P.2, and are compatible with the lifting capacity of most of the fuel handling cranes in the United States. The key design parameters and estimated weights of the NUHOMS®-24PTH DSC are listed in Table P.1-1.

The 24PTH DSC shell assembly geometry and the materials used for its fabrication are shown on drawings NUH-24PTH-1001-SAR and NUH-24PTH-1002-SAR included in Section P.1.5.

The primary confinement boundary for the NUHOMS®-24PTH DSC consists of the DSC shell, the top and bottom inner cover plates, (or the top and bottom inner cover plates of the shield plug assemblies for the 24PTH-S-LC), the siphon and vent block, the siphon and vent port cover plates, and the associated welds. Figure P.3.1-1 and Figure P.3.1-2 provide a pictorial representation of the confinement boundary for the 24PTH DSC. The outer top cover plate and associated welds form the redundant confinement boundary.

The cylindrical shell and the inner bottom cover plate boundary welds are fully compliant to Subsection NB of the ASME Code [1.4] and are made during fabrication. The top closure confinement welds are multi-layer welds applied after fuel loading and comply with the requirements of the alternative ASME Code Case N-595-2. The outer top cover plate is welded to the shell subsequent to the leak testing of the confinement boundary to the leak-tight criteria of ANSI N14.5-1997 [1.5]. There are no credible accidents which could breach the confinement boundary of the 24PTH DSC as documented in Chapter P.11.

The 24PTH DSC basket structure, shown schematically in Figure P.1-2, consists of 24 stainless steel fuel tubes with the space between adjacent tubes sandwiched by aluminum and neutron poison plates. The poison plates are made of either Borated aluminum or Metal Matrix Composites (MMCs) or Boral® that provide the necessary criticality control. The aluminum plates, together with the poison plates, provide a heat conduction path from the fuel assemblies to the canister shell. Each fuel tube is welded together at selected elevations along the axial length of the basket through stainless steel insert plates, which separate the aluminum and poison plates arranged in an egg crate configuration. The transition rails provide the transition between the rectangular basket structure the cylindrical DSC shell. There are 2 types of transition rails: four R90 solid aluminum rails located at 0°, 90°, 180°, and 270° and eight R45 steel transition rails located on both sides of 45°, 135°, 225°, and 275° locations inside the DSC cavity. The

transition rails support the fuel tubes and transfer mechanical loads to the DSC shell. They also provide the thermal conduction path from the basket assembly to the canister shell wall, making the basket assembly efficient in rejecting heat from its payload. The nominal clear dimension of each fuel tube opening is sized to accommodate the limiting assembly with sufficient clearance around the fuel assembly.

The 24PTH DSC basket geometry and the materials used for its fabrication are shown on drawings NUH-24PTH-1003-SAR and NUH-24PTH-1004-SAR, included in Section P.1.5.

During dry storage of the spent fuel in the NUHOMS®-24PTH system, no active systems are required for the removal and dissipation of the decay heat from the fuel. The NUHOMS®-24PTH DSC is designed to transfer the decay heat from the fuel to the canister body via the basket and ultimately to the ambient via either the HSM-H in storage mode or the TCs in the transfer mode.

Each canister is identified by a Mark Number, **W-NUHOMS®-24PTH-X-Y-Z**, where:

W is user specific designations;

X refers to the DSC Type as described previously (X = S or L or S-LC);

Y refers to the basket type (1A, 2A, 1B, 2B, 1C or 2C) and

Z is a number corresponding to a specific canister.

P.1.2.1.2 NUHOMS®-HSM-H Module

The Standardized HSM Model 102 is described in Chapter 1 and in the drawings included in Appendix E of the FSAR.

The HSM-H module design is similar to the design of HSM Model 102 with the following features provided to improve the heat rejection and shielding capabilities:

- Use of a thicker roof with no uniform gap between the adjacent modules,
- Use of slotted plates and holes in the DSC support rails to increase airflow at the bottom portion of canister,
- Increased height of the module to increase module cavity and stack height and to minimize air flow resistance in the module cavity,
- Optimized DSC support structure to minimum airflow resistance.
- Use of finned side heat shields option for high heat loads to improve convection heat transfer by increasing surface area of heat shield, and
- Use of louvered top heat shield to minimize airflow resistance.

Figure P.1-3 provides an overview of the module.

Figure P.1-4 shows these features in a cross sectional view of the HSM-H. The key design parameters and estimated weights of the HSM-H module are shown in Table P.1-1. The geometry and materials used to fabricate the HSM-H module are shown in the Parts List on Drawings NUH-03-7001-SAR included in Section P.1.5.

P.1.2.1.3 NUHOMS®-OS197FC Transfer Cask

The OS197FC TC is a modified version of the OS 197/OS197H TC described in the FSAR and in the drawings included in Appendix E of the FSAR.

The top lid of the OS197/OS197H TC is scalloped out at sixteen locations on the lid underside (See Figure P.1-5) to provide slots that provide an exit path for air circulation through the TC/DSC annulus. This external air circulation feature is needed during the transfer mode if decay heat is greater than 31.2 kW and basket type used in the DSC is 1A, 1B, or 1C and specific time limits for transfer are not met.

To achieve this air circulation, the NUHOMS® TC support skid is modified by the addition of two motor-driven redundant industrial grade blowers and associated hoses (See Figure P.1-6) which are connected via a cone adapter to the ram access opening. The TC spacer inside the TC cavity also requires minor modifications to ensure distribution of the airflow to the perimeter region of the TC. The air circulation system is sized to provide a minimum capacity of 450 cfm.

The modifications necessary to convert OS197/OS197H TC into a OS197FC TC are shown on Drawings NUH-03-8000-SAR and NUH-03-8006-SAR, included in Section P.1.5.

P.1.2.2 Operational Features

P.1.2.2.1 General Features

The NUHOMS®-24PTH DSC is designed to safely store 24 intact standard PWR fuel assemblies or up to 12 damaged and remaining intact fuel assemblies with or without CCs. The NUHOMS®-24PTH DSC is designed to maintain the fuel cladding temperature below allowable limits during normal storage, short-term accident conditions, short-term off-normal conditions and fuel loading/transfer operations.

The criticality control features of the NUHOMS®-24PTH DSC are designed to maintain the neutron multiplication factor k-effective less than the upper subcritical limit equal to 0.95 minus benchmarking bias and modeling bias under all conditions.

P.1.2.2.2 Sequence of Operations

The sequence of operations to be performed in loading fuel into the NUHOMS®-24PTH DSCs is presented in Chapter P.8.

P.1.2.2.3 Identification of Subjects for Safety and Reliability Analysis

P.1.2.2.3.1 Criticality Prevention

Criticality is controlled by geometry, soluble boron in spent fuel pool and by utilizing fixed neutron poison material in the fuel basket. During storage, with the DSC cavity is dry and sealed from the environment, criticality control measures within the installation are not necessary because of the low reactivity of the fuel in the dry NUHOMS®-24PTH DSC and the assurance that no water can enter the DSC cavity during storage.

P.1.2.2.3.2 Chemical Safety

There are no chemical safety hazards associated with operations of the NUHOMS®-24PTH system.

P.1.2.2.3.3 Operation Shutdown Modes

The NUHOMS®-24PTH DSC system is a totally passive system so that consideration of operation shutdown modes is unnecessary.

P.1.2.2.3.4 Instrumentation

No change.

P.1.2.2.3.5 Maintenance Techniques

No change.

P.1.2.3 Cask Contents

The NUHOMS®-24PTH DSC system is designed to store 24 intact (or up to 12 damaged and remaining intact) PWR fuel assemblies with or without control components. The fuel that may be stored in the NUHOMS®-24PTH DSC is presented in Chapter P.2.

Chapter P.3 provides the structural analysis. Chapter P.4 includes the thermal analysis. Chapter P.5 provides the shielding analysis. Chapter P.6 covers the criticality safety of the NUHOMS®-24PTH DSC system and its contents, listing material densities, moderator ratios, and geometric configurations.

P.1.3 Identification of Agents and Contractors

Transnuclear, Inc. (TN) provides the design, analysis, licensing support and quality assurance for the NUHOMS®-24PTH system. Fabrication of the NUHOMS®-24PTH system cask is done by one or more fabricators qualified under TN's quality assurance program described in Chapter P.13. This program is written to satisfy the requirements of 10 CFR 72, Subpart G and covers control of design, procurement, fabrication, inspection, testing, operations and corrective action. Experienced TN operations personnel provide training to utility personnel prior to first use of the NUHOMS®-24PTH system and prepare generic operating procedures.

Managerial and administrative controls, which are used to ensure safe operation of the casks, are provided by the host utility. NUHOMS®-24PTH system operations and maintenance are performed by utility personnel. Decommissioning activities will also be performed by utility personnel in accordance with site procedures.

TN provides specialized services for the nuclear fuel cycle that support transportation, storage and handling of spent nuclear fuel, radioactive waste and other radioactive materials. TN is the holder of Certificate of Compliance 1004.

P.1.4 Generic Cask Arrays

No change.

P.1.5 Supplemental Data

The following Transnuclear drawings are enclosed:

1. NUHOMS®-24PTH Transportable Storage DSC, for PWR Fuel, Main Assembly NUH-24PTH-1001NP-SAR, Revision 0.

2. NUHOMS®-24PTH Transportable Storage DSC, for PWR Fuel, Shell Assembly, NUH-24PTH-1002NP-SAR, Revision 0.

3. NUHOMS®-24PTH Transportable Storage DSC, for PWR Fuel Basket Assembly, NUH-24PTH-1003NP-SAR, Revision 0.

4. NUHOMS®-24PTH Transportable Storage DSC, for PWR Fuel, Transition Rails, NUH-24PTH-1004NP-SAR, Revision 0.

5. Standardized NUHOMS® ISFSI HSM-H, Main Assembly, NUH-03-7001NP-SAR, Revision 0.

6. General License NUHOMS® ISFSI OS197FC Onsite Transfer Cask Main Assembly, NUH-03-8006NP-SAR, Revision 0.

7. General License NUHOMS® ISFSI Onsite Transfer Cask Overview, NUH-03-8000NP-SAR, Revision 2A.

Figure Withheld Under 10 CFR 2.390

TRANSNUCLEAR

NUHOMS® 24PTH TRANSPORTABLE
STORAGE DSC FOR PWR FUEL
MAIN ASSEMBLY

NUH24PTH-100NP-SAR | NONE | 1 OF 4 | 0

Figure Withheld Under 10 CFR 2.390

TRANSNUCLEAR

NUHOMS®24PTH TRANSPORTABLE
STORAGE DSC FOR PWR FUEL
MAIN ASSEMBLY

NUH24PTH-100TNP-SAR | NONE | 3 OF 4 | 0

Figure Withheld Under 10 CFR 2.390

TRANSNUCLEAR

NUHOMS® 24PTH TRANSPORTABLE
STORAGE DSC FOR PWR FUEL
MAIN ASSEMBLY

NONE | 3 OF 4 | 0

Figure Withheld Under 10 CFR 2.390

TRANSNUCLEAR

NUHOMS®24PTH TRANSPORTABLE STORAGE DSC FOR PWR FUEL MAIN ASSEMBLY

NUH24PTH-100HP-SAR | NONE | 4 OF 4 | 0

A

2 1 1

Figure Withheld Under 10 CFR 2.390

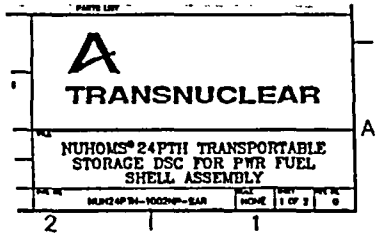

Figure Withheld Under 10 CFR 2.390

TRANSNUCLEAR

NUHOMS® 24PTH TRANSPORTABLE STORAGE DSC FOR PWR FUEL SHELL ASSEMBLY

NUH24PTH-1002NP-SAR | SCALE NONE | SHEET 2 OF 2 | REV. NO. 0

A

2 1 1

Figure Withheld Under 10 CFR 2.390

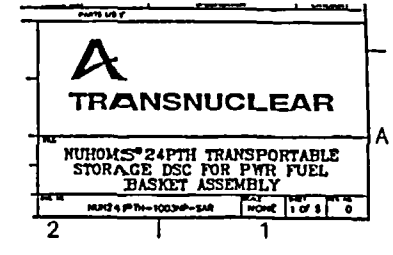

Figure Withheld Under 10 CFR 2.390

TRANSNUCLEAR

NUHOMS® 24PTH TRANSPORTABLE STORAGE DSC FOR PWR FUEL BASKET ASSEMBLY

NUH24PTH-100.SAR | NONE | 2 OF 2 | 0

A

2 1 1

Figure Withheld Under 10 CFR 2.390

TRANSNUCLEAR

NUHOMS® 24PTH TRANSPORTABLE STORAGE DSC FOR PWR FUEL BASKET ASSEMBLY

NUH24PTH-1003NP-SAR | NONE | 3 OF 5 | 0

A

2 1 1

Figure Withheld Under 10 CFR 2.390

TRANSNUCLEAR

NUHOMS®24PTH TRANSPORTABLE STORAGE DSC FOR PWR FUEL BASKET ASSEMBLY

NUH24PTH-1003NP-SAR | NONE | 4 OF 5 | 0

Figure Withheld Under 10 CFR 2.390

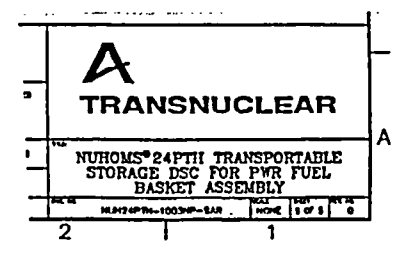

Figure Withheld Under 10 CFR 2.390

TRANSNUCLEAR

NUHOMS®24PTH TRANSPORTABLE STORAGE DSC FOR PWR FUEL TRANSITION RAILS

NUH24PTH-100-NP-SAR | NONE | 1 OF 1 | 0

A

2 1 1

Figure Withheld Under 10 CFR 2.390

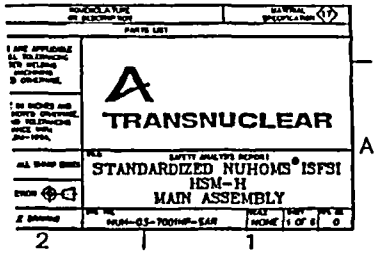

Figure Withheld Under 10 CFR 2.390

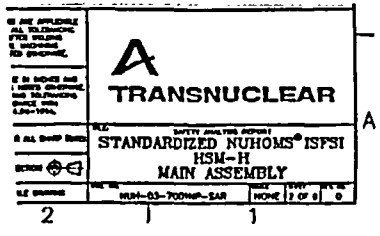

Figure Withheld Under 10 CFR 2.390

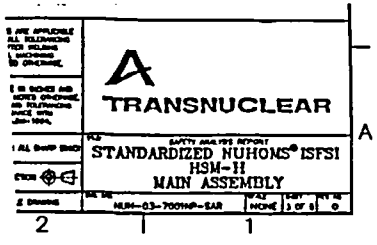

Figure Withheld Under 10 CFR 2.390

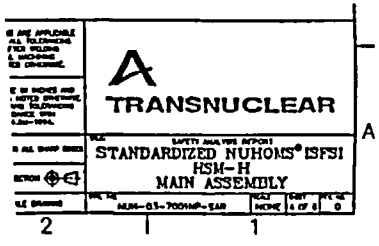

Figure Withheld Under 10 CFR 2.390

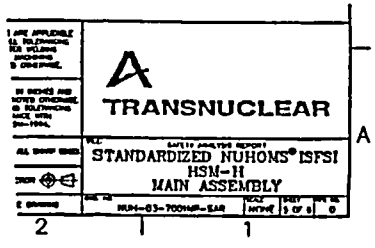

Figure Withheld Under 10 CFR 2.390

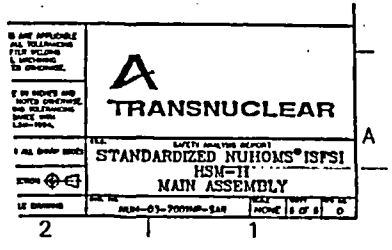

Figure Withheld Under 10 CFR 2.390

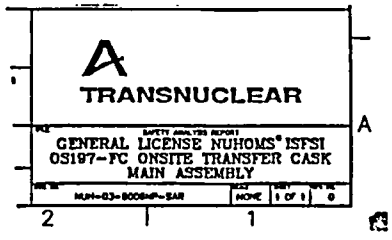

Figure Withheld Under 10 CFR 2.390

TRANSNUCLEAR

GENERAL LICENSE NUHOMS®ISFSI
ONSITE TRANSFER CASK OVERVIEW

NUH-03-8000NP-SAR | NONE | 1 OF 1 | 2A

A

2 1 1

P.1.6 References

1.1 U.S. Nuclear Regulatory Commission, Regulatory Guide 3.61, Standard Format and Content for a Topical Safety Analysis Report for a Spent Fuel Dry Storage Cask, February 1989.

1.2 10CFR72, Rules and Regulations, Title 10, Chapter 1, Code of Federal Regulations - Energy, U.S. Nuclear Regulatory Commission, Washington, D.C., "Licensing Requirements for the Independent Storage of Spent Nuclear Fuel and High-Level Radioactive Waste."

1.3 10CFR71, Rules and Regulations, Title 10, Chapter 1, Code of Federal Regulations - Energy, U.S. Nuclear Regulatory Commission, Washington, D.C., "Packaging and Transportation of Radioactive Material."

1.4 American Society of Mechanical Engineers, ASME Boiler And Pressure Vessel Code, Section III, Division 1 - Subsections NB, NG and NF, 1998 edition including 2000 Addenda.

1.5 ANSI N14.5-1997, "Leakage Tests on Packages for Shipment," February 1998.

Table P.1-1
Key Design Parameters of the NUHOMS®-24PTH System[2]

Parameter	24PTH DSC Type		
	24PTH-S	24PTH-L	24PTH-S-LC
DSC Length (in.)	186.55 (Maximum)	192.55 (Maximum)	186.55 (Maximum)
DSC Outside Diameter (in)	67.19	67.19	67.19
DSC Cavity Length (in.)	169.6	175.6	173.28
DSC Shell Thickness (in)	0.5	0.5	0.5
DSC Loaded Weight, Dry[1] (kips)	92.4/89.0	93.7/90.1	89.5
DSC Loaded Weight, Wet[1] (kips)	96.6/93.2	98.4/94.8	95.1
HSM-H Single Module Weight, Empty (kips)	306.1		
HSM-H Single Module Weight, Loaded (kips)	398.5	399.8	395.6
HSM Model 102 Weight, Empty (kips)	NA	NA	263.0
HSM Model 102 Weight, Loaded (kips)	NA	NA	352.5

HSM-H	
Overall Length (without Shield walls), in	248
Overall Width (without shield walls), in	116
Overall Height, in	222

Notes: (1) The 24PTH-S and 24PTH-L DSC weights are provided with and without aluminum inserts in the R45 transition rails of the basket. The 24PTH-S-LC DSC does not include aluminum inserts.
(2) Under stated otherwise, nominal values are provided.

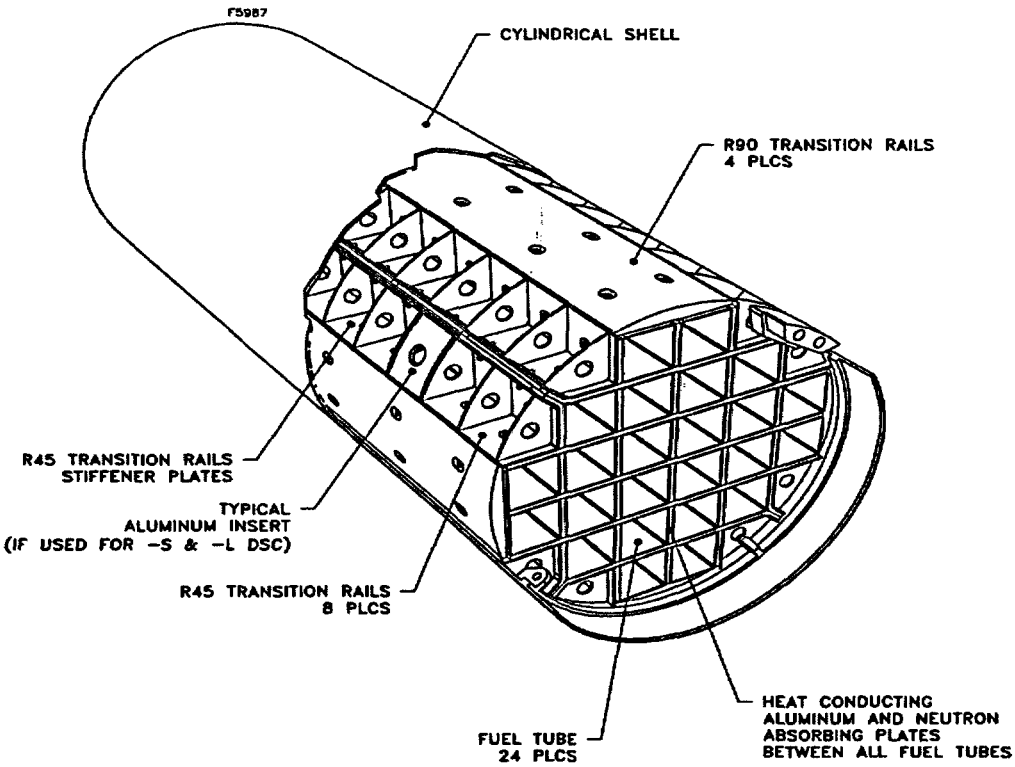

Note: The DSC top and bottom shield plugs and cover plates are not shown for clarity.

Figure P.1-1
NUHOMS®-24PTH DSC Components

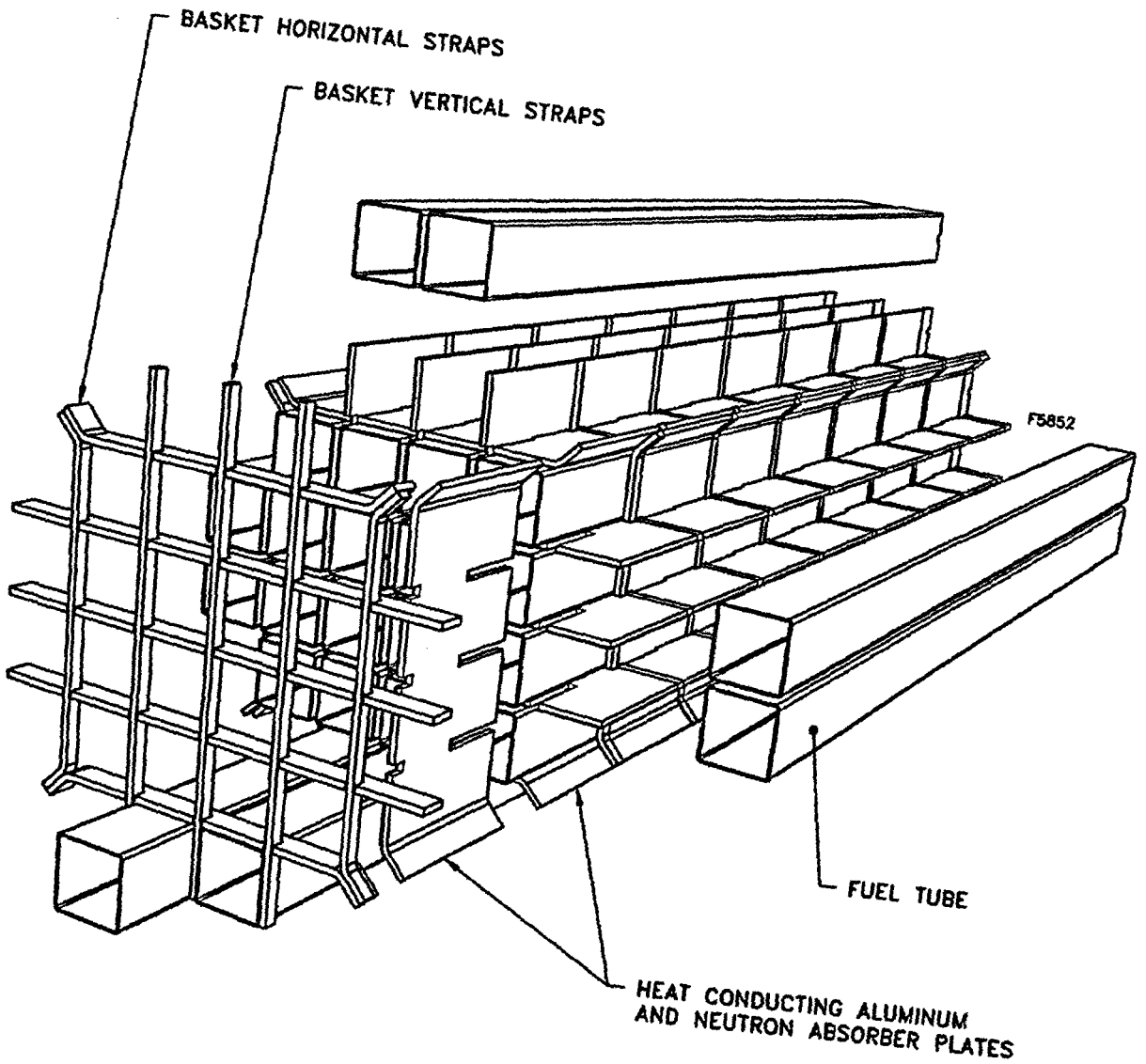

Figure P.1-2
Disassembled View of the NUHOMS® 24PTH DSC Basket

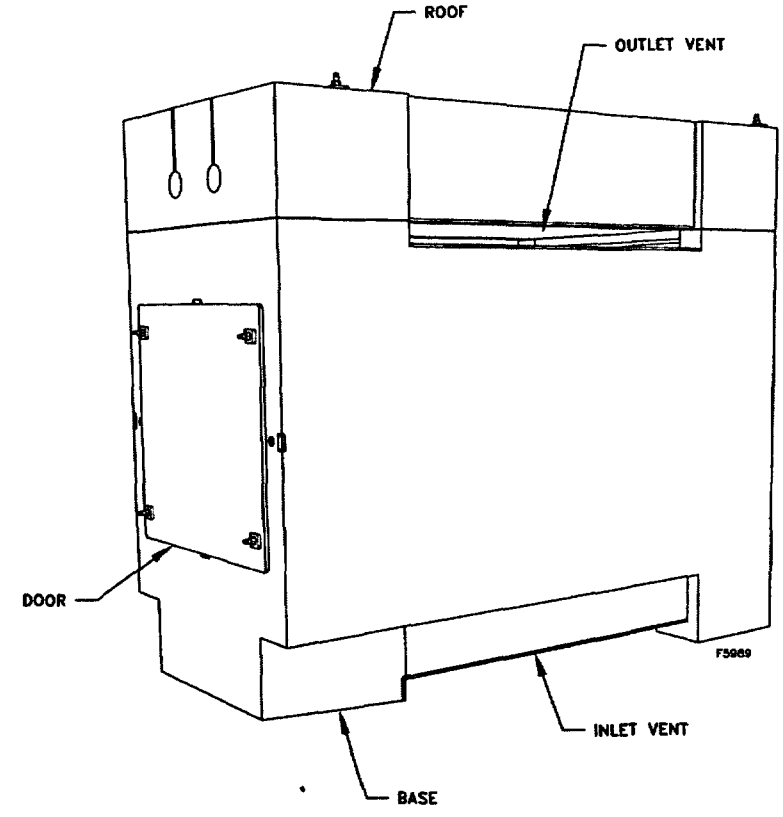

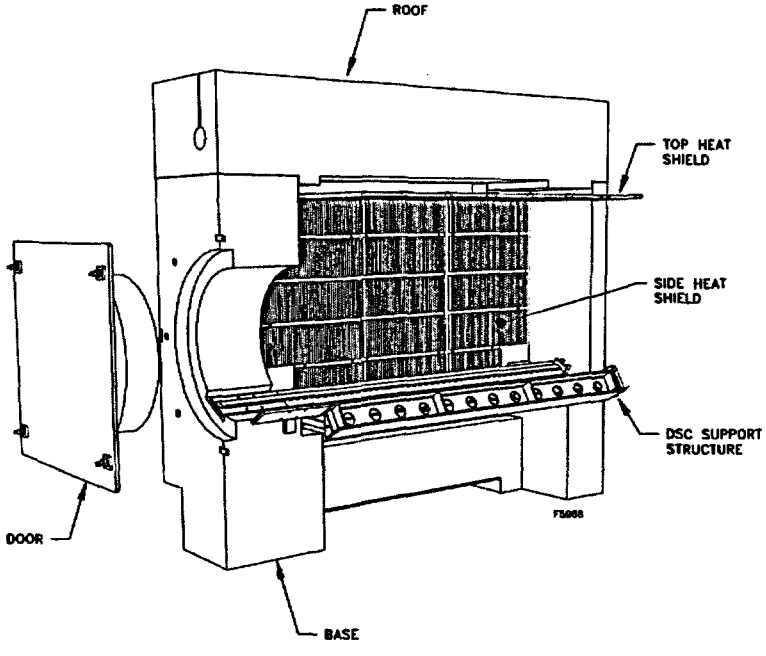

Figure P.1-3
NUHOMS® HSM-H Schematic

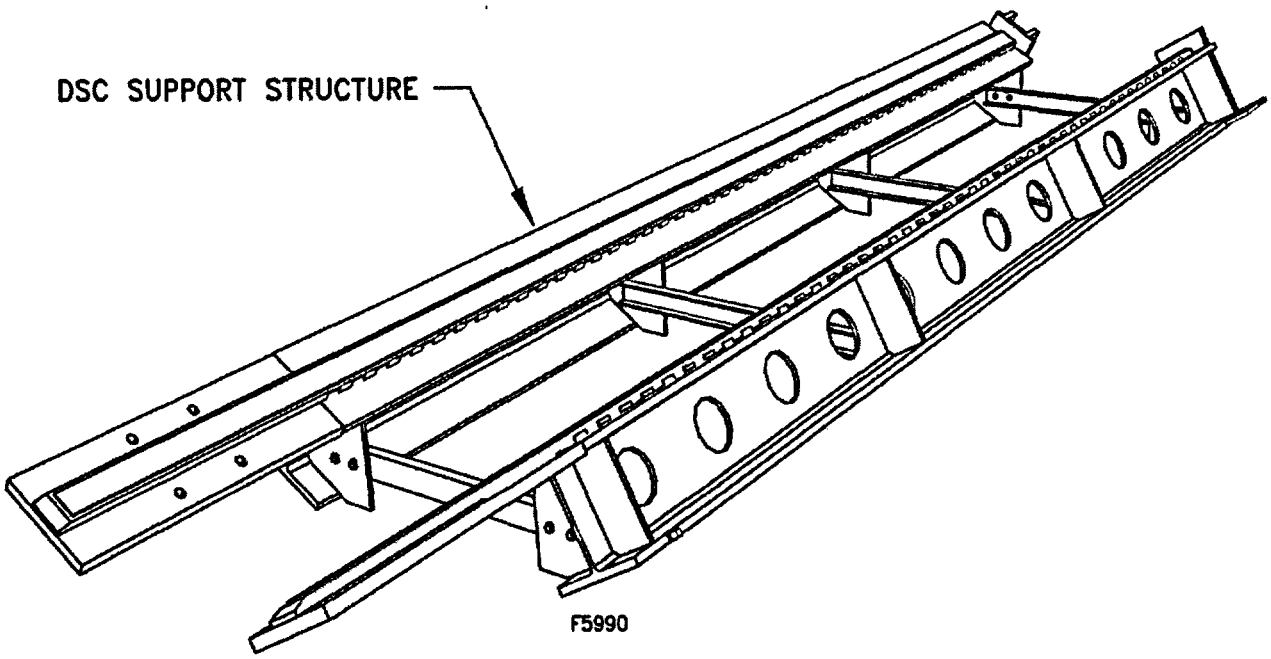

Figure P.1-4
Schematic View of the HSM-H—Support Structure

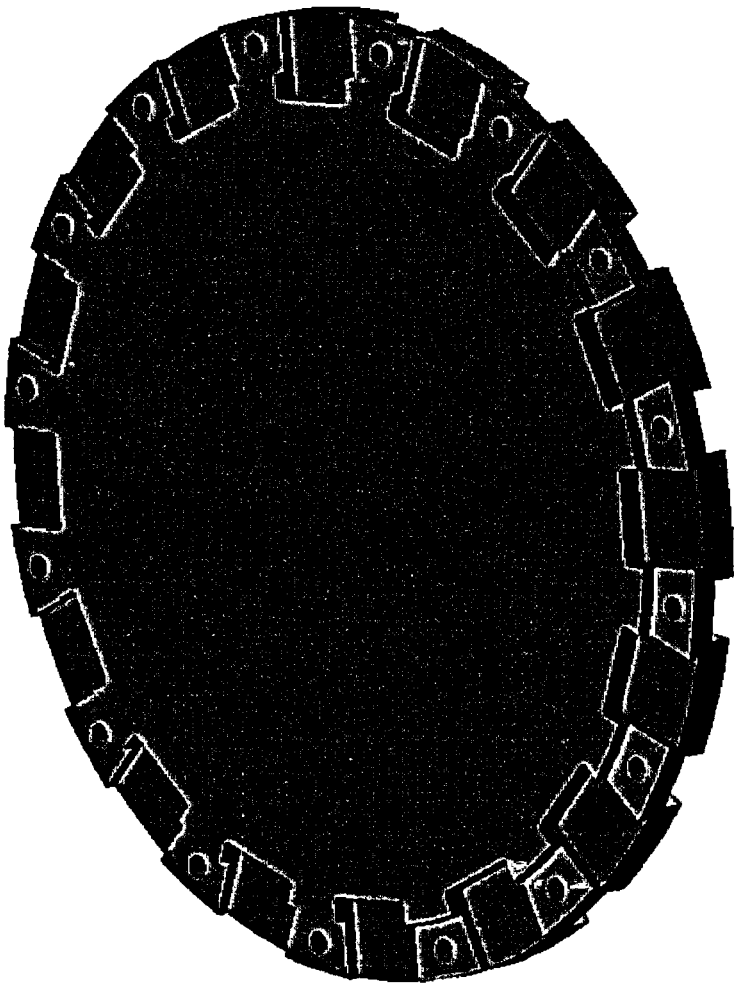

Figure P.1-5
NUHOMS® OS197FC TC Top Lid (Bottom View)

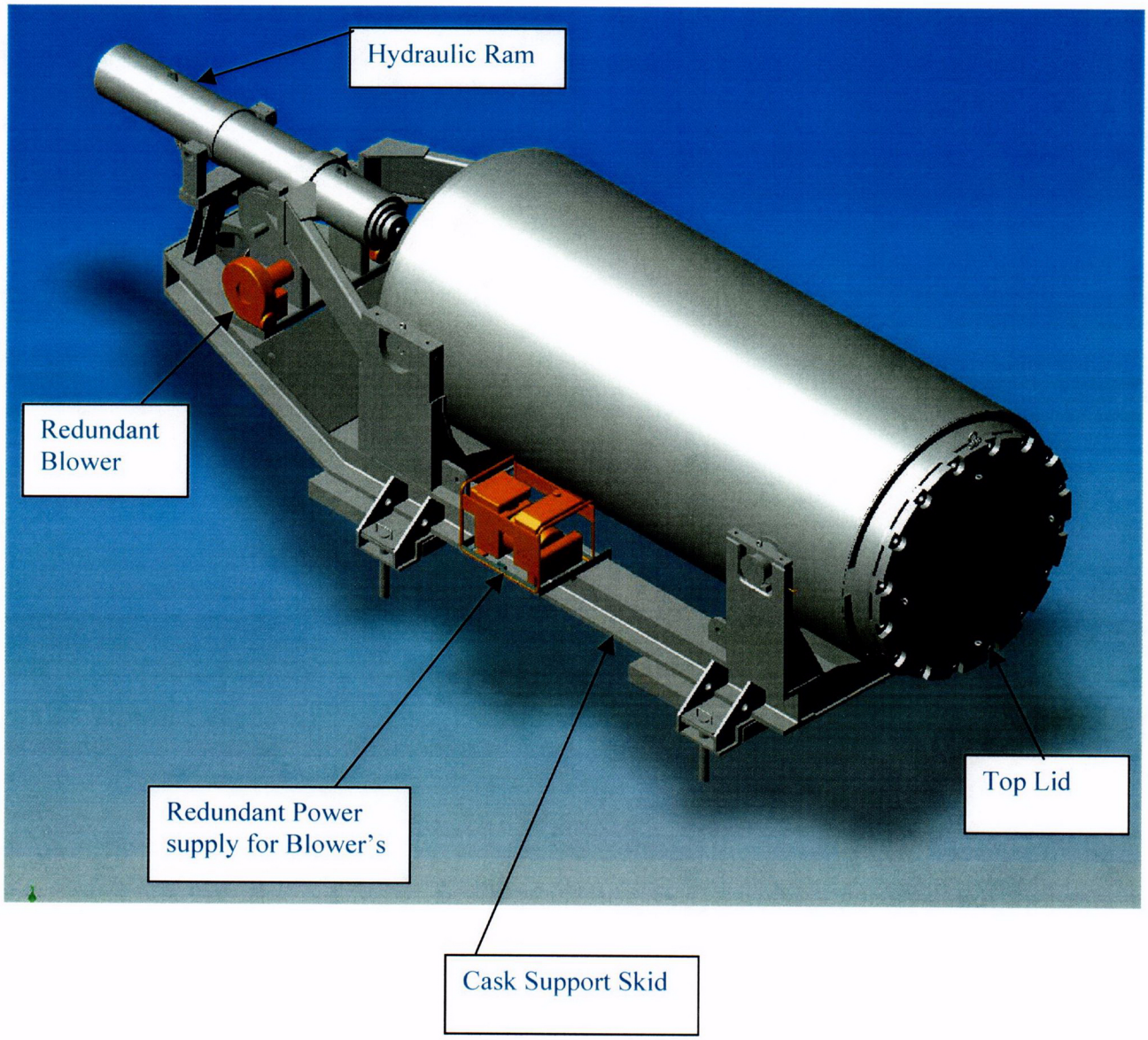

Figure P.1-6
NUHOMS® Cask Support Skid for OS197FC TC

C01