CONNECTICUT YANKEE ATOMIC POWER COMPANY

HADDAM NECK PLANT
362 INJUN HOLLOW ROAD • EAST HAMPTON, CT 06424-3099

MAR 3 1 2005 CY-05-061
Docket No. 50-213

RE: 10 CFR 20.2002

U. S. Nuclear Regulatory Commission
Attn: Document Control Desk
Washington, DC 20555

Haddam Neck Plant
Supplemental Information
Request for Approval of Proposed Procedures
in Accordance with 10 CFR 20.2002

In a letter dated January 4, 2005[1],Connecticut Yankee Atomic Power Company (CYAPCO) proposed to transfer certain portions of its solid waste from decommissioning of the Haddam Neck Plant (HNP) facilities (e.g., structures and buildings) to a disposal facility. Specifically, CYAPCO proposed to dispose of demolition debris from decommissioning of the HNP facilities to the Waste Control Specialist (WCS) Facility, located in Andrews, Texas.

CYAPCO has performed a conservative radiological assessment of the demolition debris material and determined that the potential dose to workers involved in the transportation and placement of the waste at the site and to members of the public after closure of the facility will be no more than a few millirem per year Total Effective Dose Equivalent (TEDE) and a small fraction of the NRC limits for exposure to members of the public of 25 millirem/yr TEDE. This assessment was provided to the NRC by letter dated January 4, 2005.[1]

The purpose of this letter is to provide supplemental information requested by the NRC Staff in a teleconference with CYAPCO on February 22, 2005.

[1] G. H. Bouchard (CYAPCO) letter to the US NRC Document Control Desk, dated January 4, 2005, "Request for Approval of Proposed Procedures in accordance with 10 CFR 20.2002", CY-05-002.

NMSS01

The above mentioned information requested by the NRC staff is in two subject areas:

1. Additional characterization information that was not available for inclusion in the original submittal of this request, and

2. On-site survey limits for various shipping containers, other than the Intermodal-type, which CYAPCO intends to utilize to ship waste to the WCS site.

These information needs are addressed as follows:

Characterization Information:

The original submittal for this request provided a significant amount of characterization information for most of the areas that will generate building debris to be shipped to WCS. The two areas for which characterization information was limited were the Containment Building interior walls and floors and the Spent Fuel Building.

Containment Building Interior Walls and Floors:

The characterization data in the original submittal was limited for the radionuclides H-3 and C-14. The contamination mechanism for these radionuclides was suspected of being gaseous diffusion into the concrete rather than due to leakage of contaminated liquids, which is the mechanism for the other radionuclides of interest. For the radionuclides other than H-3 and C-14, using the floor concentrations for both the walls and floors (which was done in the original submittal) was considered to be very conservative as the wall contamination levels are normally much lower then the floor concentrations.

To increase the understanding of the H-3 and C-14 concentrations in concrete inside Containment, eight (8) additional concrete cores were taken at six (6) new locations in various areas of the Containment interior. As can be seen in the enclosed Figures, these cores when combined with the original 4 cores (ones that were analyzed for C-14 including 2 analyzed for H-3) cover all three floor levels of Containment and the two interior wall levels. The additional characterization data for these 8 samples is provided in the revised Table 3 (for the significant radionuclides: H-3, C-14, Co-60 and Cs-137) along with the samples results from the original submittal for which H-3 and/or C-14 was analyzed.

It can be seen in the revised Table 3, that the levels of C-14 are higher on the inside (side nearest the reactor) of the Containment interior walls. The inside samples were not analyzed for two internal wall and the two Charging Floor

cores. To ensure that the higher concentrations for these surfaces are adequately weighted in the waste average, four additional values (corresponding to the average of the two C-14 inside wall samples) have been added to Table 3 to ensure conservatism.

Table 10 provides an illustration with respect to the method used to determine the average waste concentrations. This table shows how the dilution factors used for the Containment interior concrete were determined and a sample calculation to further demonstrate the calculation method.

This data was reviewed against the conclusions made in the original submittal. The following was determined:

1. Except for H-3, when significant contamination is present, the core wafer closest to the surface contains contamination that is at least an order of magnitude higher than that in the next sample. This confirmed the original conclusion in this respect. To characterize the waste, the surface wafer concentration is diluted by the total thickness of the floor or for the internal walls (as they are contaminated on both sides), by half of the thickness of the walls and the Charging Floor(underside also conservatively assumed to be contaminated).
2. As can be seen in the revised Table 3, the ratio of C-14 to Co-60 shows significant variability across the samples taken inside the Containment Building. This would be expected, as discussed earlier, due to the different contamination mechanisms for C-14 and Co-60. The use of a scaling factor using Co-60 as a surrogate as discussed in the original submittal is not appropriate for C-14.
3. The concentrations of C-14 in the waste, diluted over the appropriate depth of concrete, are generally consistent. As the underside of the Charging Floor is expected to be contaminated with C-14 at levels consistent with inside wall samples, only half the of the Charging Floor thickness is assumed in the dilution calculation. This data is consistent with that contained in the original submittal.
4. The concentrations of H-3, Co-60 and Cs-137 in the waste (surface concentrations diluted over the appropriate depth for the later two) are lower then those presented in the original submittal.

Based upon the above, the following modifications are made to the original submittal of this request:

1. For the Containment Building internal walls and floors, the C-14 concentration to be used to determine the post closure dose will be that contained in the revised Table 3 using actual characterization data in lieu of using a scaling factor to the Co-60 concentration. This change results in a change to the weighted average C-14 concentration for all the waste

proposed for disposal at WCS (revised Table 8 enclosed). As can be seen on the revised Table 9 attached, this increase has no affect on the projected post closure dose since C-14 in the waste does not result in any dose for the WCS site. Considering this, the above changes do not alter the conclusion of the original submittal in that "the potential dose to workers involved in the transportation and placement of the waste at the site and to members of the public after closure of the facility will be no more than a few millirem per year Total Effective Dose Equivalent (TEDE) and a small fraction of NRC limits for exposure to members of the public of 25 millirem/yr TEDE".

2. Although the average waste concentrations for H-3, Co-60 and Cs-137 determined for the Containment Building interior concrete walls and floors are lower then those contained in the original submittal, the original higher values will be retained for conservatism.

Spent Fuel Building:

Due to the operable status of the Spent Fuel Building, characterization has not been undertaken. Recently, on March 30, 2005, all the spent fuel and GTCC waste was transferred from the spent fuel pool to the Independent Spent Fuel Storage Installation (ISFSI). The characterization of the Spent Fuel Building will be performed in upcoming months once spent fuel racks are removed and the spent fuel pool is drained. Specifically, 20 samples (evenly spaced with 4 in the walls and 8 in the floors below elevation 17'6" and an additional 8 samples from the walls of the spent fuel pool above elevation 17'6") will be taken to provide enough characterization data to confirm radionuclide waste concentrations and scaling factors. The samples taken will be analyzed so that the profile with the depth of the concrete can be confidently shown. The samples will include analysis of concrete from inside and outside surfaces and areas inside the wall with at least 15% of the wall/floor thickness characterized. To adequately assess the volumetric contamination of concrete, a wafer from at least 20% of 20 samples will be analyzed for all 20 nuclides listed in Table 2-12 of the HNP License Termination Plan. The results of these samples will be compared to the waste concentrations assumed in this request. If the results show higher waste concentrations (i.e., higher worker or post-closure dose) the NRC will be asked to review and approve the effect of these differences on the conclusions of this submittal. If the waste concentrations are below the values that have been presented, the sample results will be submitted to the NRC for information.

<u>On-site Survey Limits for Additional Types of Waste Containers</u>:

B-25 Boxes:

In addition to the Intermodal-type containers discussed in our January 4th letter[1], CYAPCO may be using B-25 type boxes to ship waste to WCS. An action level

has been developed to identify when it is appropriate to transport waste in a B-25 box to WCS or to an alternate disposal site if the container dose rates exceed the alternate waste disposal procedure criteria of 10 CFR 20.2002. This action level is a bounding value developed using the same assumptions and methodology as were used to determine the actions levels for Intermodal-type boxes in the January 4, 2005, submittal.

Using totally filled B-25 boxes containing the highest density material allowed by the package weight, a 1 meter dose rate of 5 μr/hr is selected as a reliable and conservative action level for determining compliance with the alternate disposal procedure survey criteria. It is considered that containers exhibiting dose rates below the action level may be shipped to WCS and those exhibiting higher dose rates need to be investigated further to determine radionuclide concentrations or shipped to alternate facilities.

As this limit is 50 % of the limit for Intermodal containers, the corresponding dose to transportation workers will be less that that shown acceptable in the January 4th letter[1]. Should some very dense material be shipped in B-25 boxes such that the boxes are not completely filled to the maximum allowable weight, the 1 meter dose rate limits shown on Graph 1, below multiplied by a factor of 2.5, will be followed.

Graph 1: Action Levels for B-25 Containers at Maximum Loading

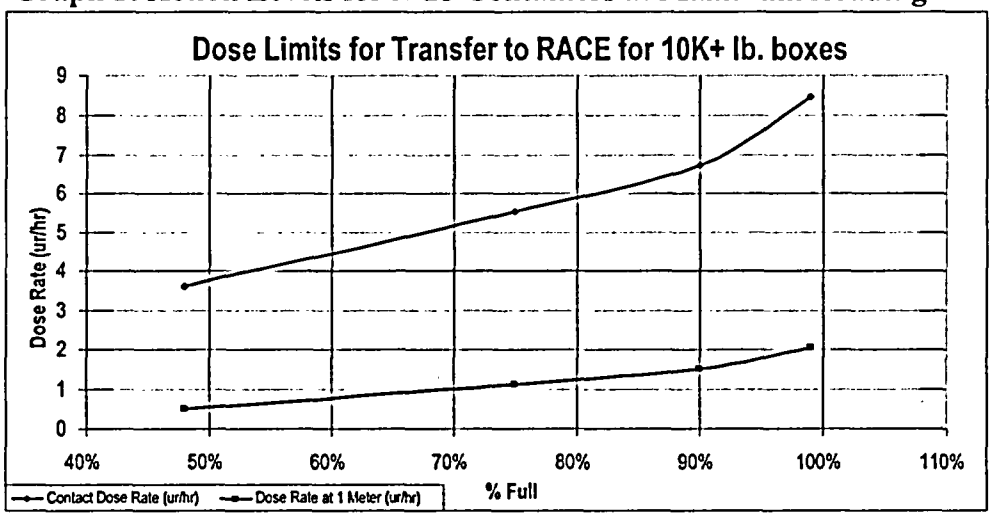

Dump Trucks/Gondola Rail Cars:

The transportation plan for moving the subject waste material to the WCS facility, included in our original January 4, 2005 submittal, consisted of the following:

- Load the material into intermodal containers at the HNP site and transport these containers by truck to a rail loading station within a 2 hour trip of the HNP facility.
- At the rail loading facility, the intermodal containers would be transferred from the truck onto flat bed rail cars for the remainder of the trip to WCS.

CYAPCO is now planning to utilize a different transportation plan as follows:

- Load the material into trailer dumps at the HNP site and transport to a Transload Facility within a 2 hour trip from the HNP site.
- Dump the waste material into the gondola rail cars within the enclosure at the Transload Facility.
- Transport by rail to the WCS Texas Facility
- Unload at WCS using the landfill site typical practices

We have performed a revised run of the TSD-DOSE Dose Calculation (See Attachment 2) to determine the dose to workers transporting the waste to and receiving/burying the waste at the WCS facility. The results of this calculation are shown in Table 11 below along with the per-truckload doses from the original submittal.

Table 11
Transportation/Disposal Worker Yearly Dose
(At the Average Waste Concentrations)

			January Submittal				This Submittal	
Work Task		Dose/ Truckload	Trips per year	mrem/ year		Dose/ Truckload	Trips per year	mrem/ year
Driver		0.000072 mrem	250	0.018		0.00044 mrem	250	0.055
Transload Facility Worker		N/A	N/A	N/A		0.0002	625	0.125
Receiving Worker		0.000091 mrem	625	0.057		0.000091 mrem	625	0.057
Landfill Worker		0.00015 mrem	313	0.047		0.00015 mrem	313	0.047
Offsite Individual		4.1 E-9 mrem	1250	5.1E-6		4.1 E-9 mrem	1250	5.1E-6
Worker Population		4.6 E-4 mrem	1250	0.575		1.0 E-3 mrem	1250	1.26
Average Worker		Average Over 10 workers	N/A	0.0575		Average over 14 workers	N/A	0.09

A review of Table 11 shows that with the new transportation plan, only the Transload Facility Worker receives more yearly dose (0.125 mrem) then the highest calculated dose in the January submittal (assuming waste at the average concentrations). Using the same methodology stated in the January submittal, if all of the waste was at the maximum allowable concentration (40 times the average concentration) the yearly dose to the Transload Facility Workers would not exceed 5 mrem. As waste concentrations corresponding to 40 times the average waste concentration was used in the original submittal to determine the on-site waste container survey limit and the geometry of the trailer dumps is essentially the same as an Intermodal box, a 1 meter dose rate of 10μr/hr over background remains a reliable and conservative action level for determining compliance with the alternate disposal procedure. Also as discussed in the original January submittal, it is expected that few if any shipments will have this maximum concentration and the yearly average dose to drivers, transload facility workers and WCS site workers will correspond to the much lower dose (highest value of 0.125 mrem/yr) from material having the average radioactivity concentrations defined in Table 8.

The option to use the transload facility for this waste involves the transfer of aggregate materials from intermodals or other containers to railcars in an enclosed facility. The waste materials would be unloaded directly into a gondola railcar through an open directional hopper. The loads would then be groomed and adjusted as needed. No material would ever be unloaded onto the floor of the facility and the hopper would not be an accumulation bin. Once loaded, the railcars would be transferred to the WCS site in Texas.

Since the option to use the transload facility involved the direct transfer of waste material from one container to another, the potential for transload employees to receive internal exposures from this process was evaluated. A bounding calculation was performed using the average radionuclide concentrations from Table 9 and an estimate of annual shipping volumes to determine the maximum internal dose to a theoretical worker in the transload facility. The calculation assumed that 50 million pounds of material was transferred to a railcar during the course of one year and a maximally exposed theoretical worker was involved in transferring half of the material (25 million pounds or 625 truckloads per year) in an enclosed facility. Using conservative values for airborne release fractions, respirable fractions, and ventilation rates, the dose to this theoretical worker was calculated to be less than 1.5 millirem for the entire process. The actual dose to a real worker in the transload facility is expected to be much lower than this bounding value based on the following considerations:

- The calculation assumed median airborne release fractions and respirable fractions for material in a powder state. The actual particle size of airborne material from the HNP waste is expected to be large (i.e. 10 μm particle size or greater) whereby the respirable amount would tend to be considerably less.

- The calculation assumed that workers remained in the area until all airborne particulates were removed by normal air transfer within the facility. This is highly unlikely to occur whereas workers are more likely to leave the facility when after transfer operations are complete.
- The calculation assumes a "free-fall" scenario where dust generation would be maximized. In reality, dust generation would be limited by the presence of the hopper and receiving container.
- No positive airborne activity has been detected at the HNP during the aggressive demolition of concrete structures with similar radionuclide concentrations.

This evaluation concluded that yearly average total internal and external dose to workers at the transload facility would be less then 1.625 mrem which is well within the guidelines established of "a few millrem per year".

In order to demonstrate that the impacts of the transfer operation are as expected, controls will be set up to check airborne and contamination levels at the transload facility for waste coming from portions of the plant that exhibit contamination levels at the higher end of the range shown in Table 8.

Although not expected, should other sized containers be used, appropriate dose rate limits will be determined using the same basis as shown above.

Summary

In summary , the conclusion reached in our January 4, 2005 letter that the calculated potential dose to members of the public, as a consequence of the proposed waste disposal from the decommissioning activities at the HNP at the Waste Control Specialists, Andrews, Texas Facility, are as follows:

- Workers involved in the transportation to and placement of the waste in the disposal cells at WCS will receive doses that are a fraction of the 5 mrem/yr dose allowable for this type of activity; and
- The projected dose to residents after closure of the site is an insignificant fraction of the 25 millirem per year limit.

Therefore, CYAPCO concludes that the proposed request for approval in accordance with 10 CFR 20.2002 will not have a significant impact on the workers, public, or the environment and that it is, therefore, acceptable.

CYAPCO hereby requests expedited review and approval of this request to support our decommissioning activities at the HNP.

If you should have any questions regarding this submittal, please contact me at (860) 267-3938.

Sincerely,

Gerard van Noordennen 3-31-05

Gerard P. van Noordennen
Regulatory Affairs Manager

Date

Attachments
cc: S. J. Collins, NRC Region 1 Administrator
T. B. Smith, NRC Project Manager, Haddam Neck Plant
R. R. Bellamy, Chief, Decommissioning and Laboratory Branch, NRC Region1
E. L. Wilds, Jr., Director, CT DEP Monitoring and Radiation Division

CY-05-061
Docket No. 50-213

Attachment 1
Haddam Neck Plant

Figure 1 Containment Floor Samples

Figure 2 Containment Internal Wall and Charging Floor Samples

Three (3) Attachments of Diagrams from the Survey/Sampling Work Plan – SSWP

Reactor Containment Building Elevation 1'-6"

Reactor Containment Building Elevation 22'

Reactor Containment Building Elevation 48'-6"

Three (3) Revised Tables

Table 3, Containment Floor and Wall Samples, Revision 1

Table 8, Average Waste Concentration Calculation, Revision 1

Table 9, Post Closure Dose Calculation, Revision 1

Table 10, Basis for Dilution Factors Used in Determining Table 3 Waste Concentrations

March 2005

Figure 1

Containment Floor Samples

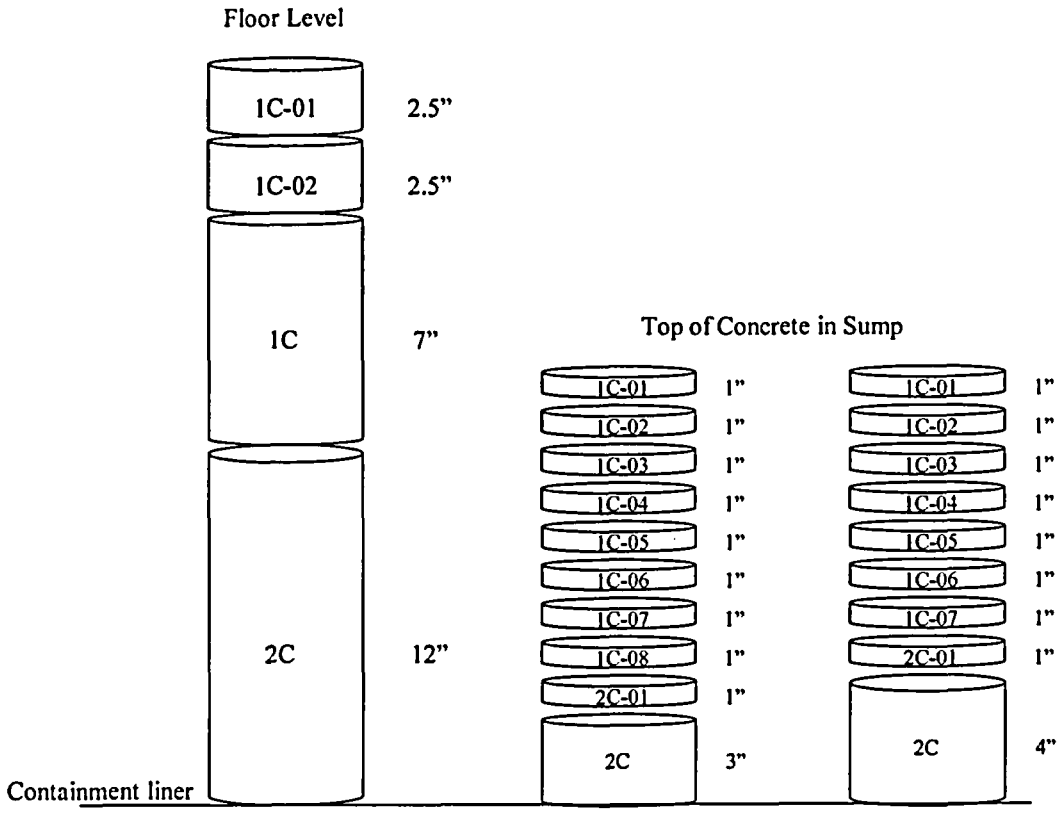

Typical core for floor locations 175 - 180

Sump Location Core 185

Sump Location Core 186

Note: wafers analyzed for radionuclides

All dimensions are approximate

Figure 2

Containment Internal Wall and Charging Floor Samples

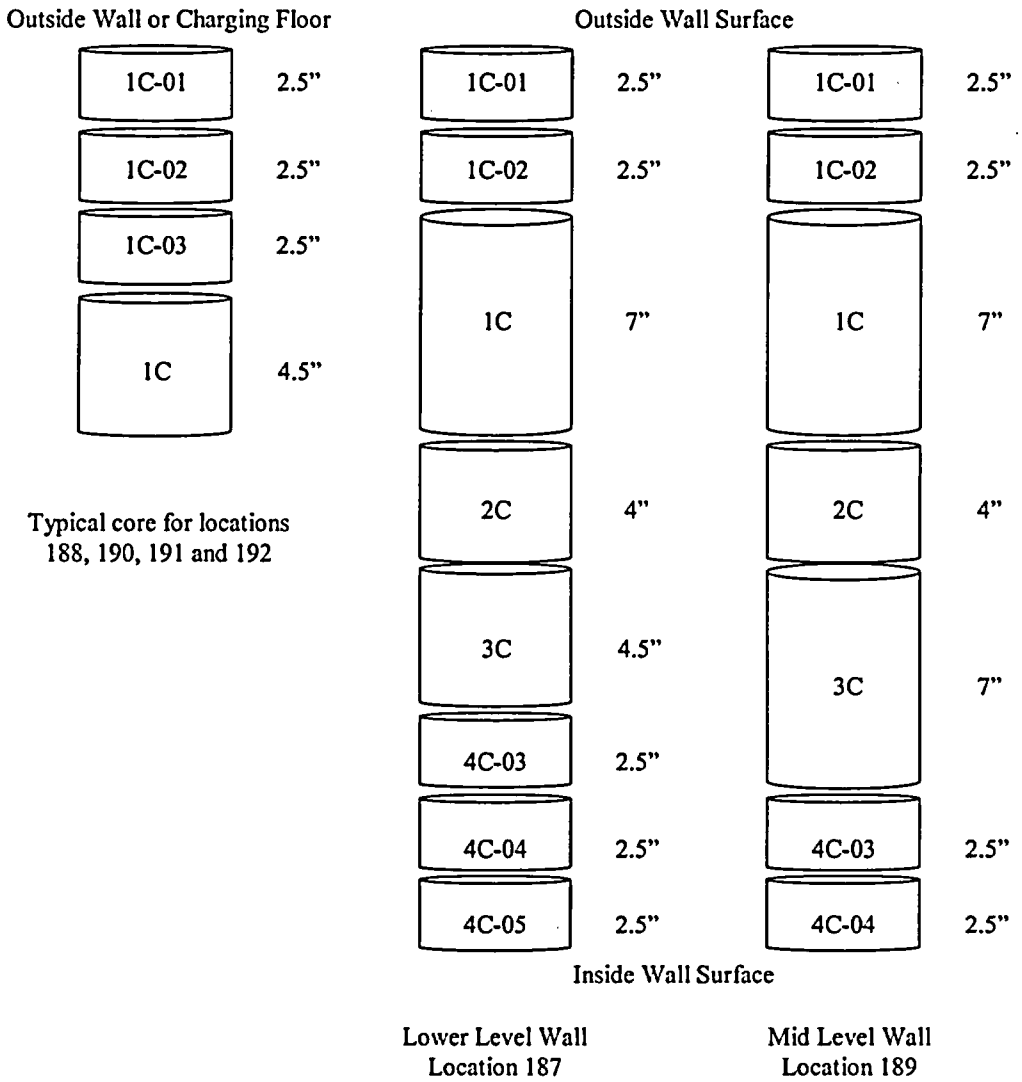

Note: wafers analyzed for radionuclides

All dimensions are approximate

Attachment 1

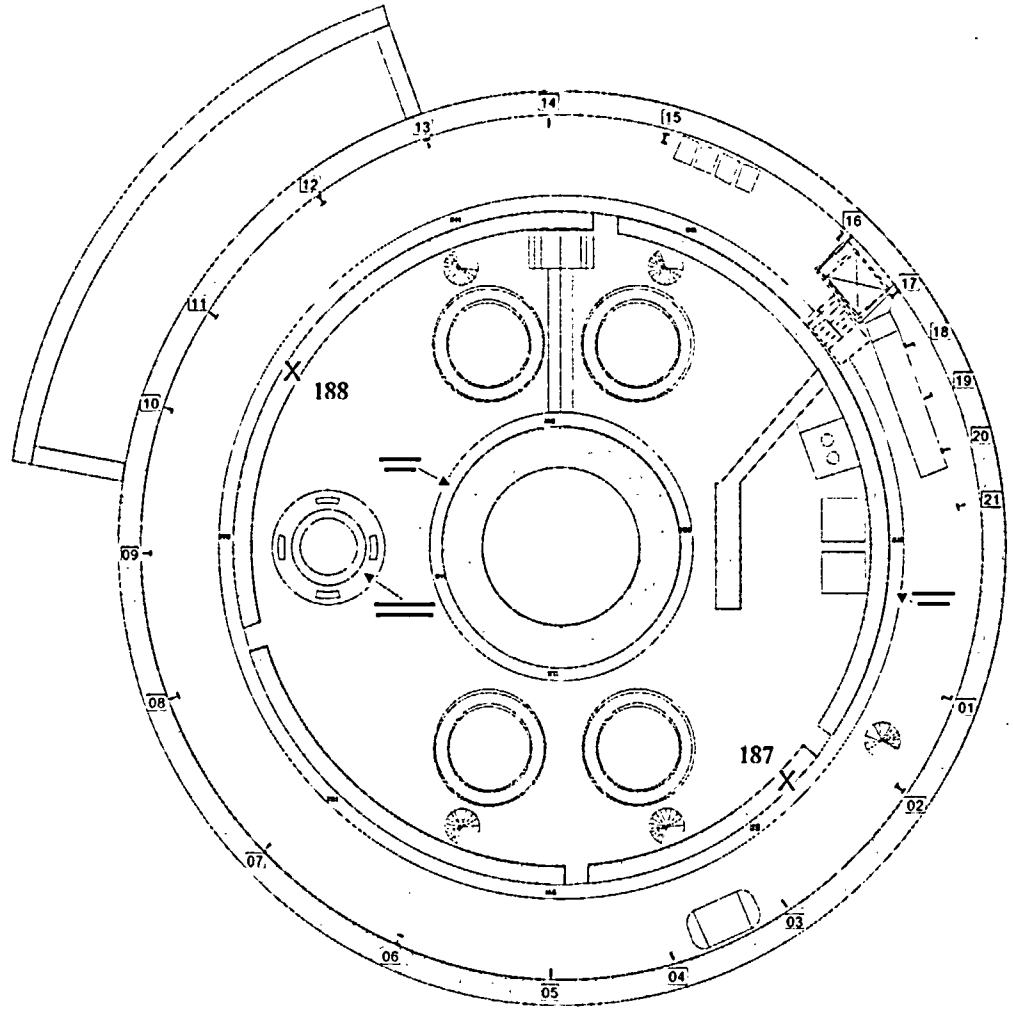

● = Hole Location

X = Wall Hole Location

NOTE:

Plant North

CONNECTICUT YANKEE ATOMIC POWER COMPANY
GENERAL ARRANGEMENT DRAWING
REACTOR CONTAINMENT BUILDING
ELEVATION: 1'-6"

INITIAL CREATION DATE:	06/18/97
REVISION DATE:	06/06/01
REVISION #:	7
MAP #:	GAD3100

LEGEND:

FLOOR WALL INTERSECTION	
SURVEY AREA BOUNDARY	
SURVEY AREA SURVEY UNIT BOUNDARY	#

Attachment 2

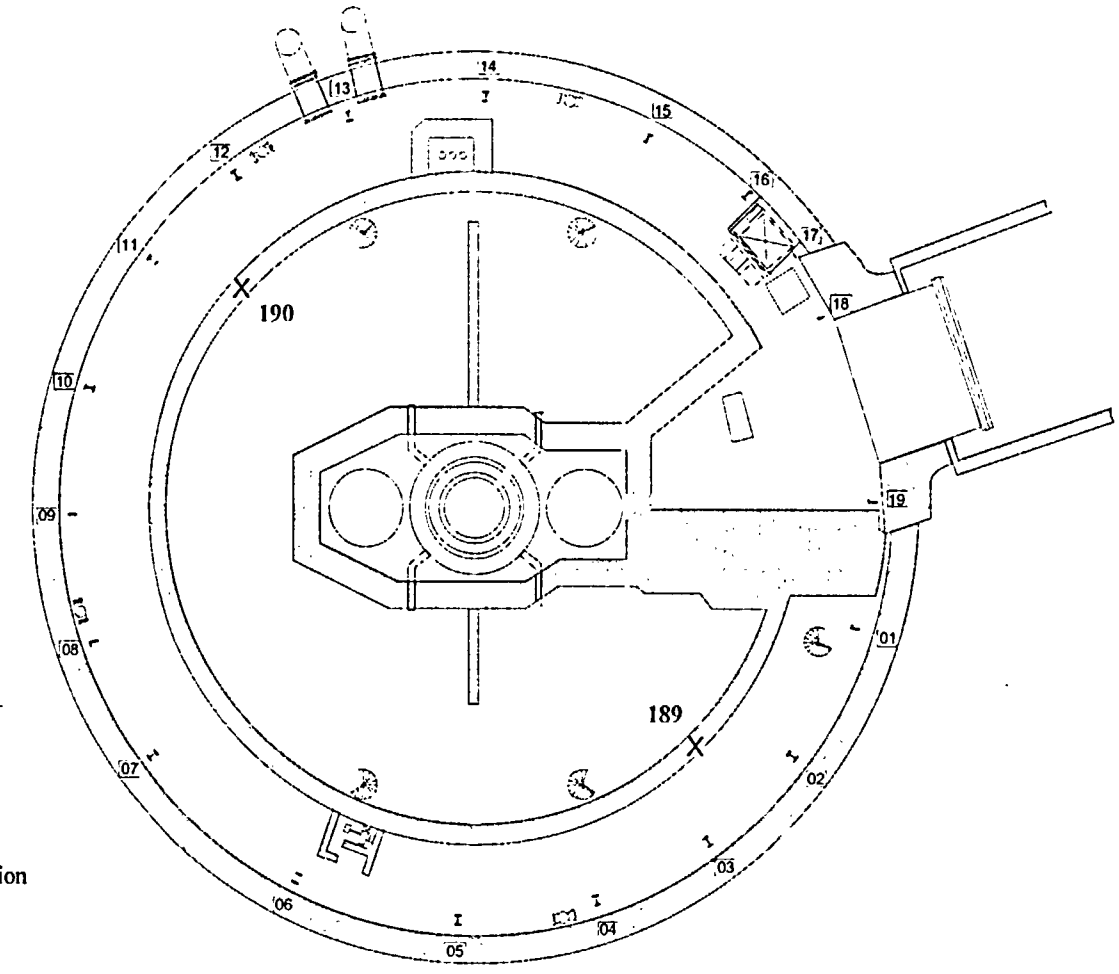

● = Hole Location

⨯ = Wall Hole Location

NOTE:

Plant North

CONNECTICUT YANKEE ATOMIC POWER COMPANY
GENERAL ARRANGEMENT DRAWING
REACTOR CONTAINMENT BUILDING
ELEVATION: 22'

INITIAL CREATION DATE:	06/18/97
REVISION DATE:	06/06/01
REVISION #:	7
MAP #:	GAD3200

LEGEND:

FLOOR WALL INTERSECTION
SURVEY AREA BOUNDARY
SURVEY AREA
SURVEY UNIT BOUNDARY

Attachment 3

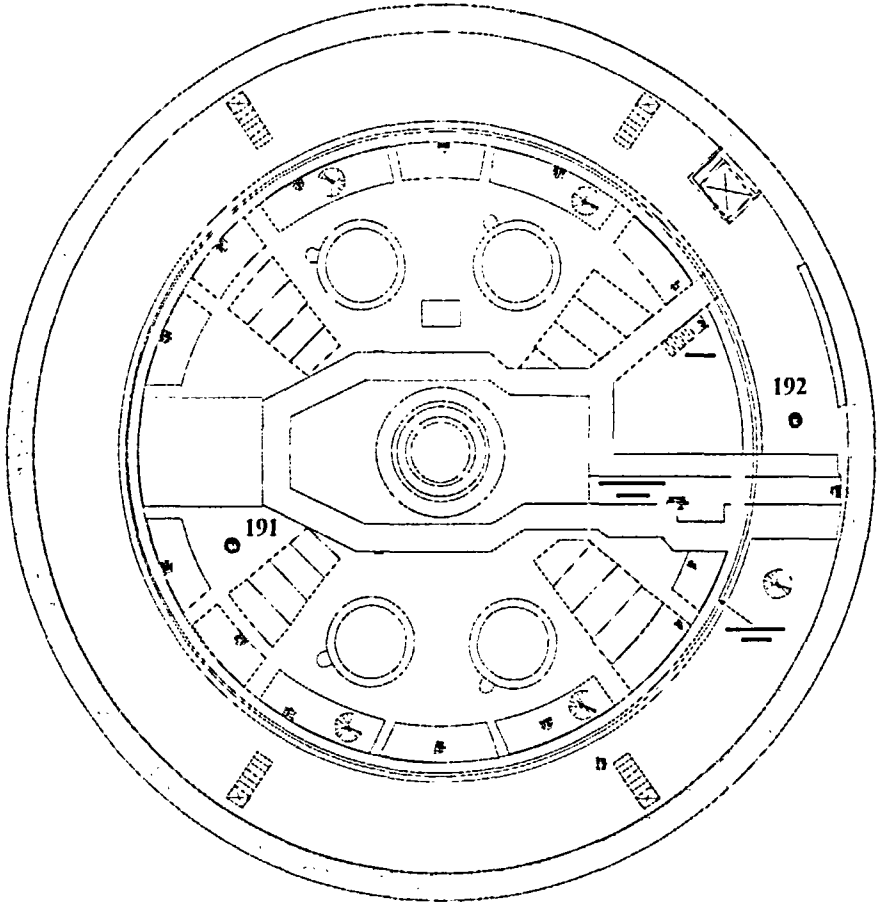

O = Hole Location

X = Wall Hole Location

NOTE:

Plant North

CONNECTICUT YANKEE ATOMIC POWER COMPANY
GENERAL ARRANGEMENT DRAWING
REACTOR CONTAINMENT BUILDING
ELEVATION: 48'-6"

INITIAL CREATION DATE:	06/18/97
REVISION DATE:	06/06/01
REVISION #:	7
MAP #:	GAD3300

LEGEND:

FLOOR WALL INTERSECTION	——
SURVEY AREA BOUNDARY	— —
SURVEY AREA	#
SURVEY UNIT BOUNDARY	- - -

TABLE 3 (Revision 1 dated 3/24/05)

Containment Floor & Wall Samples

	Sample Results Provided with January Submittal										Additional Sample Results as of 2/15/05																									
	Floor # 175		Floor # 176		Contain. Sump # 185			Contain. Sump # 186			Internal Wall Sample # 187					Internal Wall # 188				Internal Wall # 189				Internal Wall #190				Charg. Floor # 191				Charg. Floor # 192				
											Outside		Inside			Outside			Inside	Outside		Inside		Outside			Inside	Outside			Inside	Outside			Inside	
Radionuclide	175-1C 01	175-1C 02	176-1C-01	176-1C-02	185-1C-01	185-1C-02	185-1C 03	186-1C-01	186-1C-02	186-1C 03	3100-187-1C 01	3100-187-1C 02	3100-187-4C-03	3100-187-4C-04	3100-187-4C-05	3100-188-1C-01	3100-188-1C-02	3100-188-1C-03	Use Avg of #s 187-4C-05 & 189-4C-04	3200-189-1C-01	3200-189-1C-02	3200-189-4C-03	3200-189-4C-04	3100-190-1C-01	3100-190-1C-02	3100-190-1C-03	Use Avg of #s 187-4C-05 & 189 4C-04	3300-191-1C-01	3300-191-1C-02	3300-191-1C-03	Use Avg of #s 187-4C-05 & 189-4C-04	3300-192-1C-01	3300-192-1C-02	3300-192-1C-03	Use Avg of #s 187-4C-05 & 189 4C-04	Avg of 1st Sample Diluted over Total depth: All Sample Results
	pCi/g	pCi/g	pCi/g	pCi/g	pCi/g	pCi/g	pCi/g	pCi/g	pCi/g	pCi/g	pCi/g	pCi/g	pCi/g	pCi/g	pCi/g	pCi/g	pCi/g	pCi/g	pCi/g	pCi/g	pCi/g	pCi/g	pCi/g	pCi/g	pCi/g	pCi/g	pCi/g	pCi/g	pCi/g	pCi/g	pCi/g	pCi/g	pCi/g	pCi/g	pCi/g	pCi/g
H-3					1400			1170			1120	1070	701	1510	626	783	1610	1080	N/A	648	1870	1780	471	467	1010	178	N/A	696	1560	1620	N/A	772	356	837	N/A	1015
C-14	720	**0.52**	350	**0.50**	70.00	**0.50**	**0.51**	25.4	**0.57**	**0.54**	131	**0.11**	**0.10**	0.15	450	35	**0.10**	0.12	483	10.1	0.14	0.11	516	187	**0.08**	**0.08**	483	217	**0.08**	**0.08**	483	6.8	**0.09**	0.15	483	N/A
Co-60	7.78	**0.07**	23.10	**0.02**	240.0	0.38	0.09	70.9	**0.02**	**0.07**	0.123	**0.03**	**0.04**	**0.02**	0.09	0.46	**0.05**	**0.08**	N/A	0.25	**0.22**	**0.04**	0.26	0.10	**0.02**	0.06	N/A	4.50	0.13	0.11	N/A	1.83	0.08	0.05	N/A	N/A
Cs-137	34.90	**0.05**	17.00	0.06	1270	6.02	0.15	584	1.59	**0.04**	1.72	**0.03**	**0.03**	**0.03**	0.31	2.67	0.03	0.05	N/A	1.03	**0.02**	0.08	6.58	0.42	**0.03**	**0.04**	N/A	5.79	0.02	**0.01**	N/A	17.1	0.01	**0.03**	N/A	N/A
Ratio of C-14/Co-60	**92.54**		**15.15**		**0.29**			**0.36**			**1065**				**4961**	**78**				**39.8**			**1962**	**1928**				**48.2**				**3.72**				
Avg C-14 Conc. Diluted Over Concrete Depth	**75.00**		**36.46**		**Decon**	**0.50**		**Decon**	**0.57**		**23.4**				**80.4**	**6.3**			**86.3**	**1.8**			**92.1**	**33.4**		**86.3**	**45.2**			**100.6**	**1.4**			**100.6**	**48.1**
Avg Co-60 Conc. Diluted Over Concrete Depth	**0.81**		**2.41**		**Decon**	**0.03**		**Decon**	**0.07**		**0.02**				**0.02**	**0.08**				**0.05**			**0.05**	**0.02**			**0.94**				**0.38**				**0.37**
Avg Cs-137 Conc. Diluted Over Concrete Depth	**3.64**		**1.77**		**Decon**	**0.55**		**Decon**	**0.14**		**0.31**				**0.05**	**0.48**				**0.18**			**1.18**	**0.08**			**1.21**				**3.56**				**1.31**

Jan. Submittal	Containment Floor					Containment Internal Walls								
Radionuclide	Duratek Sample 1/27/99 SML #1 First 0.5"	Duratek Sample 1/27/99 SML #1 0.5 to 1 inch	Duratek Sample 1/27/99 SML #1 1 to 1.5"	Avg Over All Samp at SML #1	Avg #1 Diluted over Entire Floor Depth	Duratek Sample 1/27/99 SML #2 First 0.5"	Duratek Sample 1/27/99 SML #2 0.5 to 1"	Avg Over All Samp at SML #2	Avg #2 Diluted over Half of Wall Thick.	Duratek Sample 1/27/99 SML #3 First 0.5"	Duratek Sample 1/27/99 SML #3 0.5 to 1 inch	Duratek Sample 1/27/99 SML #3 1 to 1.5 inch	Avg Over All Samp at SML #3	Avg #3 Diluted over Half of Wall Thick.
	pCi/g	pCi/g	pCi/g	pCi/g	pCi/g	pCi/g	pCi/g	pCi/g	pCi/g	pCi/g	pCi/g	pCi/g	pCi/g	pCi/g
Co-60	23.40	**1.00**	**0.58**	8.33	0.52	0.39	0.50	0.45	0.03	1.68	0.23	**0.52**	0.81	0.09
Cs-137	279	**0.49**	**0.76**	93.42	5.84	2.12	**1.10**	1.61	0.12	13.66	**0.60**	**0.58**	4.95	0.53

Notes: 1. Sample Results in Bold Type are <Minimum Detectable Activity (MDA) (MDA Value Shown)
2. N/A = Not Applicable, the additional samples are only needed to account for the higher concentations of C-14 in the inside surfaces of walls and the charging floor

Table 8 (Revision 1 dated 3/24/05)

Average Waste Concentration Calculation

Source of Concrete Waste	Estimated Waste Weight (Million lbs)	Contam-ination Levels Based On	Average Co-60 Concen-tration by Source (pCi/g)	Average Cs-137 Concen-tration by Source (pCi/g)	Average H-3 Concen-tration by Source (pCi/g)	C-14 Scaling Factor to Co-60	C-14 Concen-tration (pCi/g)	Mn-54 Scaling Factor to Co-60	Mn-54 Concen-tration (pCi/g)	Fe-55 Scaling Factor to Co-60	Fe-55 Concen-tration (pCi/g)	Ni-63 Scaling Factor to Co-60	Ni-63 Concen-tration (pCi/g)	Sr-90 Scaling Factor to Co-60	Sr-90 Concen-tration (pCi/g)	Nb-94 Scaling Factor to Co-60	Nb-94 Concen-tration (pCi/g)	Tc-99 Scaling Fator to Co-60	Tc-99 Concen-tration (pCi/g)	Ag-108m Scaling Factor to Co-60	Ag-108m Concen-tration
Containment Walls	40	Actual	0.06	0.05	5.48	2.522	0.143	0.003	0.000	0.737	0.042	0.322	0.018	Use Actual	0.011	0.0020	0.0001	0.0127	0.0007	0.0036	0.0002
Cont. Floor & Internal	20	Actual Floor	0.67	2.69	1285.00	*N/A*	*48.145*	0.010	0.006	0.226	0.151	12.289	8.214	0.0486	0.032	0.0072	0.0048	0.0343	0.0229	0.0112	0.0075
RHR Floors	1	Actual	1.73	5.78	8.45	0.011	0.020	0.003	0.005	0.737	1.272	0.322	0.556	0.0678	0.117	0.0020	0.0034	0.0127	0.0219	0.0036	0.0062
RHR Walls	2	Actual	0.18	0.63	7.66	0.011	0.002	0.003	0.000	0.737	0.130	0.322	0.057	Use Actual	0.073	0.0020	0.0003	0.0127	0.0022	0.0036	0.0006
Waste Disposal Walls	2.5	RHR Walls	0.18	0.63	7.66	0.011	0.002	0.003	0.000	0.737	0.130	0.322	0.057	RHR Walls	0.073	0.0020	0.0003	0.0127	0.0022	0.0036	0.0006
Waste Disposal Floors	0.5	Actual	2.79	4.59	8.45	0.011	0.032	0.003	0.007	0.737	2.058	0.322	0.899	0.0678	0.189	0.0020	0.0055	0.0127	0.0354	0.0036	0.0100
PAB Above El. 17.5'	7	Cont. Floor	0.67	2.69	7.66	0.011	0.008	0.003	0.002	0.737	0.493	0.322	0.215	0.0486	0.032	0.0020	0.0013	0.0127	0.0085	0.0036	0.0024
Fuel Pool Walls & Floor	1	RHR Floors	1.73	5.78	8.45	0.011	0.020	0.003	0.005	0.737	1.272	0.322	0.556	0.0678	0.117	0.0020	0.0034	0.0127	0.0219	0.0036	0.0062
Remainder of Fuel Bldg	8	RHR Walls	0.18	0.63	7.66	0.011	0.002	0.003	0.000	0.737	0.130	0.322	0.057	RHR Walls	0.073	0.0020	0.0003	0.0127	0.0022	0.0036	0.0006
Service Building	8	Cont. Walls	0.06	0.05	5.48	0.011	0.001	0.003	0.000	0.737	0.042	0.322	0.018	Cont. Walls	0.011	0.0020	0.0001	0.0127	0.0007	0.0036	0.0002
Misc Struct/Soil/Asphalt	10	Cont. Walls	0.06	0.05	5.48	0.011	0.001	0.003	0.000	0.737	0.042	0.322	0.018	Cont. Walls	0.011	0.0020	0.0001	0.0127	0.0007	0.0036	0.0002
Total	100	**Weighted Avg. Conc.**	**0.284**	**0.974**	**261.88**		***9.69***		**1.67E-03**		**0.14**		**1.69**		**2.77E-02**		**1.25E-03**		**6.49E-03**		**2.04E-03**

Source of Concrete Waste	Estimated Waste Weight (Million lbs)	Contam-ination Levels	Average Co-60 Concen-tration by Source (pCi/g)	Cs-134 Scaling Factor to Co-60	Cs-134 Concen-tration (pCi/g)	Eu-152 Scaling Factor to Co-60	Eu-152 Concen-tration (pCi/g)	Eu-154 Scaling Factor to Co-60	Eu-154 Concen-tration (pCi/g)	Eu-155 Scaling Factor to Co-60	Eu-155 Concen-tration (pCi/g)	Pu-238 Scaling Factor to Co-60	Pu-238 Concen-tration (pCi/g)	Pu-239 Scaling Factor to Co-60	Pu-239 Concen-tration (pCi/g)	Pu-241 Scaling Fator to Co-60	Pu-241 Concen-tration (pCi/g)	Am-241 Scaling Fator to Co-60	Am-241 Concen-tration (pCi/g)	Cm-243 Scaling Fator to Co-60	Cm-243 Concen-tration (pCi/g)
Containment Walls	40	Actual	0.06	0.0048	0.0003	0.0087	0.0005	0.0043	0.0002	0.0066	0.0004	0.0112	0.0006	0.0031	0.0002	0.1758	0.0099	0.0143	0.0008	0.0036	0.0002
Cont. Floor & Internal	20	Actual Floor	0.67	0.0312	0.0209	0.0277	0.0185	0.0236	0.0158	0.0214	0.0143	0.0150	0.0101	0.0057	0.0038	0.1837	0.1228	0.0332	0.0222	0.0043	0.0029
RHR Floors	1	Actual	1.73	0.0048	0.0082	0.0087	0.0150	0.0043	0.0075	0.0066	0.0114	0.0112	0.0193	0.0031	0.0053	0.1758	0.3034	0.0143	0.0246	0.0036	0.0062
RHR Walls	2	Actual	0.18	0.0048	0.0008	0.0087	0.0015	0.0043	0.0008	0.0066	0.0012	0.0112	0.0020	0.0031	0.0005	0.1758	0.0310	0.0143	0.0025	0.0036	0.0006
Waste Disposal Walls	2.5	RHR Walls	0.18	0.0048	0.0008	0.0087	0.0015	0.0043	0.0008	0.0066	0.0012	0.0112	0.0020	0.0031	0.0005	0.1758	0.0310	0.0143	0.0025	0.0036	0.0006
Waste Disposal Floors	0.5	Actual	2.79	0.0048	0.0133	0.0087	0.0243	0.0043	0.0121	0.0066	0.0185	0.0112	0.0313	0.0031	0.0086	0.1758	0.4908	0.0143	0.0398	0.0036	0.0100
PAB Above El. 17.5'	7	Cont. Floor	0.67	0.0048	0.0032	0.0087	0.0058	0.0043	0.0029	0.0066	0.0044	0.0112	0.0075	0.0031	0.0021	0.1758	0.1175	0.0143	0.0095	0.0036	0.0024
Fuel Pool Walls & Floor	1	RHR Floors	1.73	0.0048	0.0082	0.0087	0.0150	0.0043	0.0075	0.0066	0.0114	0.0112	0.0193	0.0031	0.0053	0.1758	0.3034	0.0143	0.0246	0.0036	0.0062
Remainder of Fuel Bldg	8	RHR Walls	0.18	0.0048	0.0008	0.0087	0.0015	0.0043	0.0008	0.0066	0.0012	0.0112	0.0020	0.0031	0.0005	0.1758	0.0310	0.0143	0.0025	0.0036	0.0006
Service Building	8	Cont. Walls	0.06	0.0048	0.0003	0.0087	0.0005	0.0043	0.0002	0.0066	0.0004	0.0112	0.0006	0.0031	0.0002	0.1758	0.0099	0.0143	0.0008	0.0036	0.0002
Misc Struct/Soil/Asphalt	10	Cont. Walls	0.06	0.0048	0.0003	0.0087	0.0005	0.0043	0.0002	0.0066	0.0004	0.0112	0.0006	0.0031	0.0002	0.1758	0.0099	0.0143	0.0008	0.0036	0.0002
Total	100	**Weighted Avg. Conc.**	0.28		**4.89E-03**		**5.01E-03**		**3.81E-03**		**3.85E-03**		**3.69E-03**		**1.23E-03**		**5.09E-02**		**6.58E-03**		**1.11E-03**

Note: 1. Information changed from the original submittal shown in italics

Table 9 (Revision 1 dated 3/24/05)

Post Closure Dose Calculation

Radio-nuclide	Dose Equivalent per Concentration of Radionuclide - Resident Farmer (mrem/yr per pCi/g)	Weighted Average of All Waste (pCi/g)	Post Closure Dose for Avg of All Waste (mrem/yr)
H-3	4.20E-08	261.88	1.100E-05
C-14	0.00E+00	*9.69*	0.000E+00
Mn-54	0.00E+00	**1.67E-03**	0.000E+00
Fe-55	0.00E+00	0.14	0.000E+00
Co-60	0.00E+00	0.28	0.000E+00
Ni-63	0.00E+00	1.69	0.000E+00
Sr-90	0.00E+00	0.0277	0.000E+00
Nb-94	0.00E+00	**1.25E-03**	0.000E+00
Tc-99	0.00E+00	6.49E-03	0.000E+00
Ag-108m	0.00E+00	**2.04E-03**	0.000E+00
Cs-134	0.00E+00	4.89E-03	0.000E+00
Cs-137	0.00E+00	0.97	0.000E+00
Eu-152	0.00E+00	5.01E-03	0.000E+00
Eu-154	0.00E+00	3.81E-03	0.000E+00
Eu-155	0.00E+00	3.85E-03	0.000E+00
Pu-238	4.30E-07	3.69E-03	1.587E-09
Pu-239	0.00E+00	1.23E-03	0.000E+00
Pu-241	0.00E+00	5.09E-02	0.000E+00
Am-241	0.00E+00	6.58E-03	0.000E+00
Cm-243	0.00E+00	1.11E-03	0.000E+00
Total Post Closure Dose (mrem/yr)			**1.101E-05**

Notes: **1. Values in Bold Type are based on Minimum Detectable Activity (MDA) (i.e. Radionuclide was not detected at the MDA concentration)**
2. Information changed from the original submittal shown in shaded cells

TABLE 10

Basis for Dilution Factors Used in Determining Table 3 Waste Concentrations

A. Dilution Factors	Wafer Thick. (in.)	Total Thick. (in.)	Dilution Factor
1. Floor Samples # 175 & 176:	2.5	24	9.6
2. Sump Floor Samples # 185 & 186:	1.0	11	11
(Dilution Factor used for Co-60 in Sample # 185 and Cs-137 in both samples. For all other results, actual value used as sump will have been totally remediated after 1" removal for the other radionuclides)			
3. Duratek Floor Sample # 1:	1.5	24	16
4. Duratek Wall Sample # 2:	1	14(1/2 Wall)	14
5. Duratek Wall Sample # 3:	1.5	14(1/2 Wall)	9.3
6. Internal Wall Samples # 187 thru 190:	2.5	14(1/2 Wall)	5.6
7. Charging Floor Samples # 191 & 192:	2.5	12(1/2 Floor)	4.8

B. Sample Calculation for C-14 Concentration in Containment Floor and Walls

Sample # From Table 3	Sample Concentration (pCi/g)		Dilution Factor From "A" Above		Waste Concentration (pCi/g)
1) 175-1C-01	720	divided by	9.6	equals	75.00
2) 176-1C-01	350	"	9.6	"	36.46
3) 185-1C-02 (Use 2nd wafer as first 1" of concrete to be disposed elsewhere) 0.5					
4) 186-1C-02 (Use 2nd wafer as first 1" of concrete to be disposed elsewhere) 0.57					
5) 187-1C-01	131	"	5.6	"	23.4
6) 187-4C-05	450	"	5.6	"	80.4
7) 188-1C-01	35	"	5.6	"	6.3
8) Inside Sample Core #188: Use average of #s 6 & 10 ((450+516)/2)/5.6 = 86.3					
9) 189-1C-01	10	"	5.6	"	1.8
10)189-4C-04	516	"	5.6	"	92.1
11)190-1C-01	187	"	5.6	"	33.4
12)Inside Sample Core #190: Use average of #s 6 & 10 ((450+516)/2)/5.6 = 86.3					
13)191-1C-01	217	"	4.8	"	45.2
14)Inside Sample Core #191: Use average of #s 6 & 10 ((450+516)/2)/4.8 = 100.6					
15)192-1C-01	7	"	4.8	"	1.4
16)Inside Sample Core #192: Use average of #s 6 & 10 ((450+516)/2)/4.8 = 100.6					
				Average Waste Concentration	**= 770.3/16=48.1**

Docket No. 50-213
CY-05-061

Attachment 2

Haddam Neck Plant
Updated TSD-Dose Calculation
("Dose to Non-Radiation Workers During Transport, Receipt, and Disposal for Transload/Gondola Car Transportation Option – dated March 29, 2005")

March 2005

Dose to Non-Radiation Workers During Transport, Receipt, and Disposal

In order to assess the impact to non-radiation workers from the transport, receipt, processing, and disposal of low activity radioactive waste, an analysis was performed using the TSD-DOSE model (V 2.22)[1]. TSD-DOSE is a program developed by Argonne National Laboratory for estimating doses to facility workers and the surrounding public at Treatment, Storage, and Disposal (TSD) facilities from shipments of hazardous waste that may contain small amounts of radioisotopes.

The steps and parameters used to model the operations were chosen to be conservative yet realistic. In other words, engineering judgment and knowledge from several site visits was used to develop a model which could be applied to most TSD facilities and would produce conservative dose estimates in almost all cases (almost all because not every TSD facility was visited such that the conservatism of the model may not cover a site that has characteristics outside of the model). The default values were chosen to bound the TSD facilities visited.

TSD-DOSE estimates worker and public doses from seven operations. These operations can be turned on or off to reflect the actual TSD facility operations. In addition, many of the parameters used to model the typical operations can be adjusted to fit the actual facility. A dose is calculated for each operation based on radionuclide activities, waste characteristics, and any site-specific information entered by the user. Doses to various receptors are calculated by summing the doses from those operations that would potentially contribute to the exposure.

Ver 2.2 of the TSD-DOSE model was used to calculate the dose to the truck driver, the non-radiation worker at the TSD facility, and the public during transport and handling of the low activity material.

The worst-case scenario that will maximize the dose to the driver and the non-radiation worker at the TSD facility is a rolloff container with a 25 cubic yard capacity. In order to calculate the maximum dose to the non-radiation worker at the TSD facility for this worst-case scenario, the following assumptions for the seven operations in the TSD-DOSE model will be made. These assumptions are based on the actual Waste Control Specialists experience in handling similar waste streams.

Transport to the TSD facility.

The steps in this operation are: Load and secure shipment prior to transport; Drive loaded truck to TSD facility; Rest in back of cab en route to TSD facility; Maintenance (i.e. checking tires or refueling) of truck en route to TSD facility.

For trans-shipment from the generating facility to the rail transload facility, it is assumed that the driver is exposed for 2 hours at a distance of 5 feet from the waste. the dose is insignificant to the railroad worker.

Offloading at Transload facility

(Mix waste in mixing pit.)

---

1. "TSD-DOSE: A Radiological Dose Assessment Model for Treatment, Storage, and Disposal Facilities", Argonne National Laboratory, ANL/EAD/LD-4 (Rev. 1), September 1998.

The offloading to a gondola car is modeled by using the offloading to mixing pan module in TSD-DOSE and assuming that the offloading to the railcar conservatively takes one hour.

Two non-radiation worker for one hour at a distance of 5 feet.

For bulk shipments the dose is insignificant to the railroad worker.

Receiving and sampling at WCS

Weigh and survey truck and inspect manifest:

One non-radiation workers for 30 minutes at the default distance of 5 feet.

Unload drums for inspection, sampling and storage prior to treatment:

This operation was not included

Inspect and sample drums.

This operation was not included

Transfer drums to storage awaiting treatment.

This operation was not included

Pump drummed liquids to storage.

Not applicable.

Storage.

Work in solid storage area.

This operation was not included

Transfer drums out of storage are for treatment.

This operation was not included

Work in liquid storage area.

Not applicable.

Incineration.

This operation was not included.

Treatment and on-site landfill at WCS.

Unload waste to mixing pit.

This operation was not included

Mix waste in mixing pit.

This operation was not included

Load truck and transport to landfill.

Two non-radiation worker for thirty minutes at a distance of 5 feet.

Unload truck at landfill.

Two non-radiation worker for 15 minutes at a distance of 5 feet.

Transport to off-site landfill.

This operation was not included.

Incinerator maintenance.

This operation was not included.

It is also likely that at least 10 different TSD facility workers could be exposed to any one shipment.

The results of the TSD dose calculation are attached. The first TSD-DOSE report models the shipment to and offloading at the transload facility. The second TSD-DOSE report models shipment, offloading, and disposal at the WCS facility.

Prepared by: Date: March 29, 2005

William P Dornsife

William P Dornsife, Corporate Radiation Safety Officer, Waste Control Specialists

TSD-DOSE: A Radiological Dose Assessment Model for Treatment, Storage, and Disposal Facilities

Version 2.22 - September 1998

Site: WCS
Shipment: Transport and offload at transload facility
User: dornsife

	TOTAL	EXTERNAL	INTERNAL
Dose to:			
Driver:	2.2E-04 mrem	2.2E-04 mrem	0.0E+00 mrem
Receiving worker:	not applicable	not applicable	not applicable
Incineration worker:	not applicable	not applicable	not applicable
Landfill worker:	2.0E-04 mrem	2.0E-04 mrem	8.0E-08 mrem
Offsite individual:	4.1E-09 mrem		
Offsite population:	1.4E-08 p-rem		
Worker Population:	6.2E-07 p-rem	6.2E-07 p-rem	1.6E-10 p-rem
Dose from: TRANSLOAD FACILITY			
Transport to ~~TSD facility~~:	2.2E-04 mrem	2.2E-04 mrem	not applicable
Receiving and sampling waste:	0.0E+00 mrem	0.0E+00 mrem	0.0E+00 mrem
Storage before processing:	0.0E+00 mrem	0.0E+00 mrem	not applicable
Incineration of waste:	not applicable	not applicable	not applicable
UNLOAD AT TRANSLOAD FACILITY → ~~Burial at onsite landfill~~:	2.0E-04 mrem	2.0E-04 mrem	8.0E-08 mrem
Transport to offsite landfill:	not applicable	not applicable	not applicable
Incinerator maintenance:	not applicable	not applicable	not applicable

Doses due to each isotope (mrem - population dose in p-rem).

Isotope	Co60	Cs137+D	Fe55
Activity	5.4E-06 Ci	1.9E-05 Ci	2.7E-06 Ci
Release Fraction	1.00E-02	2.00E-03	5.00E-03
Driver	1.3 E-04	9.5 E-05	0.0 E+00
Receiving worker	0.0 E+00	0.0 E+00	0.0 E+00
Incineration worker	not applicable		
Landfill worker	1.1 E-04	8.4 E-05	3.3 E-10
Offsite individual	1.0 E-09	3.1 E-09	1.1 E-13
Offsite population	3.5 E-09	1.1 E-08	3.7 E-13
Worker population	3.5 E-07	2.6 E-07	6.5 E-13

Site Description

Operations included:

Transport to TSD facility
Receiving and sampling waste
Storage before processing
Burial at onsite landfill

Operations excluded:

Incineration of waste
Transport to offsite landfill
Incinerator maintenance

Parameters

The following are the adjustable parameters used to model each operation.
A (D) after a value indicates the default value was used.

Fraction solid waste = 1.000
Fraction liquid waste = 0.000
Pre-processed waste density = 1.0 E+00 g/cc
Post-processed waste density = 1.4 E+00 g/cc

TRANSLOAD FACILITY

Transport to ~~TSD facility~~ (4 steps)

Number of Workers: 1.0E+00 (D)
Truck bed dimensions (for all steps)
length: 2.00E+01 feet
width: 7.50E+00 feet
height: 4.50E+00 feet

Step A: Load and secure shipment
average distance: 3.00E+00 feet (D)
duration: 0.00E+00 hours
shielding thickness: 6.25E-02 inches (D)

Step B: Drive
average distance: 5.00E+00 feet
duration: 2.00E+00 hours
shielding thickness: 1.25E-01 inches (D)

Step C: Rest
average distance: 2.00E+00 feet (D)
duration: 0.00E+00 hours
shielding thickness: 1.25E-01 inches (D)

Step D: Maintenance in transit
average distance: 3.00E+00 feet (D)
duration: 0.00E+00 hours
shielding thickness: 6.25E-02 inches (D)

Receiving and sampling waste (5 steps)

Number of Workers: 1.0E+00

Step A: Weight truck, inspect manifest
average distance: 5.00E+00 feet (D)
duration: 0.00E+00 hours

Receiving and sampling waste (cont'd)

Step B: Unload drums
average distance: 3.00E+00 feet (D)
time per drum or pallet: 0.00E+00 hours

Step C: Inspect and sample drums
average distance: 5.00E-01 feet (D)
time per drum: 0.00E+00 hours
airborne respirable dust concentration: 1.0E+01 mg/m3 (D)
respiratory protection factor: 1.0E+01 (D)

Step D: Transfer solids to storage
average distance: 3.00E+00 feet (D)
time per drum or pallet: 0.00E+00 hours

Step E: Pump drummed oil to storage tank
average distance: 5.00E-01 feet (D)
time per drum: 0.00E+00 hours

Storage before processing (3 steps)

Step A: Workers in solid waste storage area
average distance: 3.00E+00 feet (D)
duration: 0.00E+00 hours

Step B: Transfer solids out
average distance: 3.00E+00 feet (D)
time per drum or pallet: 0.00E+00 hours

Step C: Workers in liquid waste storage area
average distance: 3.00E+00 feet (D)
duration: 0.00E+00 hours
shielding thickness: 1.25E-01 inches (D)
Storage tank dimensions:
length: 7.00E+00 feet (D)
width: 7.00E+00 feet (D)
height: 1.20E+01 feet (D)

Burial at onsite landfill (4 steps)

Number of Workers: 2.0E+00
Dump truck bed dimensions for steps A, C, and D):
length: 2.00E+01 feet
width: 7.50E+00 feet
height: 4.50E+00 feet

Step A: Unload waste ~~to mixing pit~~ AT TRANSLOAD FACILITY
average distance: 5.00E+00 feet (D)
duration: 1.00E+00 hours
shielding thickness: 1.25E-01 inches (D)
airborne respirable dust concentration: 1.0E+00 mg/m3 (D)
respiratory protection factor: 1.0E+00 (D)

Step B: Mix waste in mixing pit
average distance: 1.00E+01 feet (D)
duration: 0.00E+00 hours
cover thickness: 2.00E+00 inches (D)
Mixing pit dimensions:
length: 1.00E+01 feet (D)
width: 1.00E+01 feet (D)
depth: 1.00E+01 feet (D)
cover thickness: 2.00E+00 inches (D)

Burial at onsite landfill (cont'd)

Step C: Load truck and transport to landfill
average distance: 5.00E+00 feet (D)
duration: 0.00E+00 hours
shielding thickness: 1.25E-01 inches (D)

Step D: Unload truck at landfill
average distance: 5.00E+00 feet (D)
duration: 0.00E+00 hours
shielding thickness: 1.25E-01 inches (D)

TSD-DOSE: A Radiological Dose Assessment Model for Treatment, Storage, and Disposal Facilities

Version 2.22 - September 1998

Site: WCS
Shipment: Transport and Disposal at WCS
User: dornsife

	TOTAL	EXTERNAL	INTERNAL
Dose to:			
Driver:	not applicable	not applicable	not applicable
Receiving worker:	9.1E-05 mrem	9.1E-05 mrem	0.0E+00 mrem
Incineration worker:	not applicable	not applicable	not applicable
Landfill worker:	1.5E-04 mrem	1.5E-04 mrem	0.0E+00 mrem
Offsite individual:	4.1E-09 mrem		
Offsite population:	1.4E-08 p-rem		
Worker Population:	3.9E-07 p-rem	3.9E-07 p-rem	0.0E+00 p-rem
Dose from:			
Transport to TSD facility:	0.0E+00 mrem	0.0E+00 mrem	not applicable
Receiving and sampling waste:	9.1E-05 mrem	9.1E-05 mrem	0.0E+00 mrem
Storage before processing:	0.0E+00 mrem	0.0E+00 mrem	not applicable
Incineration of waste:	not applicable	not applicable	not applicable
Burial at onsite landfill:	1.5E-04 mrem	1.5E-04 mrem	0.0E+00 mrem
Transport to offsite landfill:	not applicable	not applicable	not applicable
Incinerator maintenance:	not applicable	not applicable	not applicable

Doses due to each isotope (mrem - population dose in p-rem).

Isotope	Co60	Cs137+D	Fe55
Activity	5.4E-06 Ci	1.9E-05 Ci	2.7E-06 Ci
Release Fraction	1.00E-02	2.00E-03	5.00E-03
Driver	0.0 E+00	0.0 E+00	0.0 E+00
Receiving worker	5.2 E-05	3.9 E-05	0.0 E+00
Incineration worker	not applicable		
Landfill worker	8.5 E-05	6.3 E-05	0.0 E+00
Offsite individual	1.0 E-09	3.1 E-09	1.1 E-13
Offsite population	3.5 E-09	1.1 E-08	3.7 E-13
Worker population	2.2 E-07	1.7 E-07	0.0 E+00

Site Description

Operations included:

Transport to TSD facility
Receiving and sampling waste
Storage before processing
Burial at onsite landfill

Operations excluded:

Incineration of waste
Transport to offsite landfill
Incinerator maintenance

Parameters

The following are the adjustable parameters used to model each operation.
A (D) after a value indicates the default value was used.

Fraction solid waste = 1.000
Fraction liquid waste = 0.000
Pre-processed waste density = 1.0 E+00 g/cc
Post-processed waste density = 1.4 E+00 g/cc

Transport to TSD facility (4 steps)

Number of Workers: 1.0E+00 (D)
Truck bed dimensions (for all steps)
length: 2.00E+01 feet
width: 7.50E+00 feet
height: 4.50E+00 feet

Step A: Load and secure shipment
average distance: 3.00E+00 feet (D)
duration: 0.00E+00 hours
shielding thickness: 6.25E-02 inches (D)

Step B: Drive
average distance: 1.00E+01 feet
duration: 0.00E+00 hours
shielding thickness: 1.25E-01 inches (D)

Step C: Rest
average distance: 2.00E+00 feet (D)
duration: 0.00E+00 hours
shielding thickness: 1.25E-01 inches (D)

Step D: Maintenance in transit
average distance: 3.00E+00 feet (D)
duration: 0.00E+00 hours
shielding thickness: 6.25E-02 inches (D)

Receiving and sampling waste (5 steps)

Number of Workers: 1.0E+00

Step A: Weight truck, inspect manifest
average distance: 5.00E+00 feet (D)
duration: 5.00E-01 hours

Receiving and sampling waste (cont'd)

Step B: Unload drums
average distance: 3.00E+00 feet (D)
time per drum or pallet: 0.00E+00 hours

Step C: Inspect and sample drums
average distance: 5.00E-01 feet (D)
time per drum: 0.00E+00 hours
airborne respirable dust concentration: 1.0E+01 mg/m3 (D)
respiratory protection factor: 1.0E+01 (D)

Step D: Transfer solids to storage
average distance: 3.00E+00 feet (D)
time per drum or pallet: 0.00E+00 hours

Step E: Pump drummed oil to storage tank
average distance: 5.00E-01 feet (D)
time per drum: 0.00E+00 hours

Storage before processing (3 steps)

Step A: Workers in solid waste storage area
average distance: 3.00E+00 feet (D)
duration: 0.00E+00 hours

Step B: Transfer solids out
average distance: 3.00E+00 feet (D)
time per drum or pallet: 0.00E+00 hours

Step C: Workers in liquid waste storage area
average distance: 3.00E+00 feet (D)
duration: 0.00E+00 hours
shielding thickness: 1.25E-01 inches (D)
Storage tank dimensions:
length: 7.00E+00 feet (D)
width: 7.00E+00 feet (D)
height: 1.20E+01 feet (D)

Burial at onsite landfill (4 steps)

Number of Workers: 2.0E+00
Dump truck bed dimensions for steps A, C, and D):
length: 2.00E+01 feet
width: 7.50E+00 feet
height: 4.50E+00 feet

Step A: Unload waste to mixing pit
average distance: 5.00E+00 feet (D)
duration: 0.00E+00 hours
shielding thickness: 1.25E-01 inches (D)
airborne respirable dust concentration: 1.0E+00 mg/m3 (D)
respiratory protection factor: 1.0E+00 (D)

Step B: Mix waste in mixing pit
average distance: 1.00E+01 feet (D)
duration: 0.00E+00 hours
cover thickness: 2.00E+00 inches (D)
Mixing pit dimensions:
length: 1.00E+01 feet (D)
width: 1.00E+01 feet (D)
depth: 1.00E+01 feet (D)
cover thickness: 2.00E+00 inches (D)

Burial at onsite landfill (cont'd)

Step C: Load truck and transport to landfill
average distance: 5.00E+00 feet (D)
duration: 5.00E-01 hours
shielding thickness: 1.25E-01 inches (D)

Step D: Unload truck at landfill
average distance: 5.00E+00 feet (D)
duration: 2.50E-01 hours (D)
shielding thickness: 1.25E-01 inches (D)