SIEMENS

EMF-92-153(NP)(A)
Revision 1

HTP: Departure from Nucleate Boiling Correlation for High Thermal Performance Fuel

January 2005

Siemens Power Corporation
Nuclear Division

NUCLEAR REGULATORY COMMISSION DISCLAIMER

IMPORTANT NOTICE REGARDING CONTENTS AND USE OF THIS DOCUMENT

PLEASE READ CAREFULLY

This technical report was derived through research and development programs sponsored by Siemens Power Corporation. It is being submitted by Siemens Power Corporation to the U.S. Nuclear Regulatory Commission as part of a technical contribution to facilitate safety analyses by licensees of the U.S. Nuclear Regulatory Commission which utilize Siemens Power Corporation-fabricated reload fuel or other technical services provided by Siemens Power Corporation for light water power reactors and it is true and correct to the best of Siemens Power Corporation's knowledge, information, and belief. The information contained herein may be used by the U.S. Nuclear Regulatory Commission in its review of this report, and under the terms of the respective agreements, by licensees or applicants before the U.S. Nuclear Regulatory Commission which are customers of Siemens Power Corporation in their demonstration of compliance with the U.S. Nuclear Regulatory Commission's regulations.

Siemens Power Corporation's warranties and representations concerning the subject matter of this document are those set forth in the agreement between Siemens Power Corporation and the customer to which this document is issued. Accordingly, except as otherwise expressed provided in such agreement, neither Siemens Power Corporation nor any person acting on its behalf:

A. Makes any warranty, or representation, express or implied, with respect to the accuracy, completeness, or usefulness of the information contained in this document, or that the use of any information, apparatus, method or process disclosed in this document will not infringe privately owned rights, or

B. Assumes any liabilities with respect to the use of, or for damages resulting from the use of, any information, apparatus, method or process disclosed in this document.

UNITED STATES
NUCLEAR REGULATORY COMMISSION
WASHINGTON, D.C. 20555-0001

January 6, 2005

Mr. Jerald S. Holm
Director, Regulatory Affairs
Attn: Sherry McFaden
Framatome ANP
3315 Old Forest Road
Lynchburg, VA 24501

SUBJECT: FINAL SAFETY EVALUATION FOR FRAMATOME ANP APPENDIX A TO TOPICAL REPORT EMF-92-153(P)(A), "HTP: DEPARTURE FROM NUCLEATE BOILING CORRELATION FOR HIGH THERMAL PERFORMANCE FUEL" (TAC NO. MC3223)

Dear Mr. Holm:

By letter dated May 19, 2004, as supplemented by letter dated September 30, 2004, Framatome ANP (FANP) submitted Appendix A to Topical Report (TR) EMF-92-153(P)(A), "HTP: Departure From Nucleate Boiling Correlation For High Thermal Performance Fuel," to the staff. On December 8, 2004, a U.S. Nuclear Regulatory Commission (NRC) draft safety evaluation (SE) regarding our approval of Appendix A to TR EMF-92-153(P)(A) was provided for your review and comments. By letter dated December 15, 2004, FANP commented on the draft SE. The staff incorporated FANP's single comment. The referral to "Reference 3" in item (3) of Section 4.0 of the draft SE, has been changed to correctly identify "Reference 1."

The staff has found that Appendix A to TR EMF-92-153 is acceptable for referencing in licensing applications for pressurized water reactors with high thermal performance fuel design to the extent specified and under the limitations delineated in the TR and in the enclosed SE. The SE defines the basis for acceptance of the TR.

Our acceptance applies only to material provided in the subject TR. We do not intend to repeat our review of the acceptable material described in the TR. When the TR appears as a reference in license applications, our review will ensure that the material presented applies to the specific plant involved. License amendment requests that deviate from this TR will be subject to a plant-specific review in accordance with applicable review standards.

In accordance with the guidance provided on the NRC website, we request that FANP publish accepted proprietary and non-proprietary versions of this TR within three months of receipt of this letter. The accepted versions shall incorporate this letter and the enclosed SE between the title page and the abstract. They must be well indexed such that information is readily located. Also, they must contain historical review information, such as questions and accepted responses, draft SE comments, and original TR pages that were replaced. The accepted versions shall include a "-A" (designating accepted) following the TR identification symbol.

If future changes to the NRC's regulatory requirements affect the acceptability of this TR, FANP and/or licensees referencing it will be expected to revise the TR appropriately, or justify its continued applicability for subsequent referencing.

Sincerely,

Herbert N. Berkow, Director
Project Directorate IV
Division of Licensing Project Management
Office of Nuclear Reactor Regulation

Project No. 728

Enclosure: Safety Evaluation

UNITED STATES
NUCLEAR REGULATORY COMMISSION
WASHINGTON, D.C. 20555-0001

SAFETY EVALUATION BY THE OFFICE OF NUCLEAR REACTOR REGULATION

APPENDIX A TO EMF-92-153(P)(A), "HTP: DEPARTURE FROM NUCLEATE BOILING CORRELATION FOR HIGH THERMAL PERFORMANCE FUEL"

FRAMATOME ANP

PROJECT NO. 728

1.0 INTRODUCTION

By letter dated May 19, 2004 (Reference 1), as supplemented by letter dated September 30, 2004 (Reference 2), Framatome ANP (FANP) submitted Appendix A to Topical Report (TR) EMF-92-153(P)(A), "HTP: Departure From Nucleate Boiling Correlation For High Thermal Performance Fuel" for NRC staff review. Appendix A to EMF-92-153(P)(A) proposes the extension of the range of applicability of three independent variables in the high thermal performance (HTP)-departure from nucleate boiling (DNB) correlation. The HTP-DNB correlation has been found acceptable by the NRC staff for use in DNB analysis of HTP fuels for pressurized water reactors (PWRs); its development is documented in EMF-92-153(P)(A) issued in March 1994 (Reference 3).

The DNB-based operational and safety limits, established for each nuclear power plant operating with HTP fuel, provide hot pin/hot subchannel protection for acceptable plant operation. These limits are based on the evaluation of the local coolant conditions that satisfy the HTP-DNB correlation's range of applicability. Under certain conditions, plant performance analyses can predict local coolant conditions that fall outside of the DNB correlation's range of applicability. FANP has submitted Appendix A to TR EMF-92-153(P)(A) to address these situations and ensure regulatory compliance.

2.0 REGULATORY EVALUATION

The primary purpose of the nuclear fuel in operating nuclear reactors is to generate heat. This heat, generated from nuclear fission, must be transferred from the fuel pellet to the surrounding cladding and coolant. In order to maintain safe operation of PWRs, the subcooled flow boiling that occurs must be maintained in the nucleate boiling regime. The point at which the boiling regime changes from nucleate boiling to film boiling is defined as the DNB. The heat flux at this point is called the critical heat flux (CHF). In the film boiling regime, the rate of heat transfer from the fuel cladding is dramatically reduced, resulting in a rapid increase in cladding temperature that can compromise cladding integrity.

In a reactor core, many parameters have an effect on the actual point at which DNB or CHF occurs. Core flow rate, coolant pressure, and thermodynamic quality can all cause changes in the CHF value. Because of this complexity, no mechanistic model presently exists that fully describes the physical phenomena, making it impossible to predict the CHF with 100 percent

accuracy. To obtain a reasonable prediction, the relationships between the relevant independent variables and actual experimental CHF observations have been correlated. The range of applicability of the independent variables in these correlations is based solely on the range over which the actual experimental CHF observations were recorded.

General Design Criterion (GDC) 10 of Appendix A to Part 50 of Title 10 of the *Code of Federal Regulations* (10 CFR) states that "the reactor core ... shall be designed with appropriate margin to assure that specified acceptable fuel design limits are not exceeded during any condition of normal operation, including the effects of anticipated operational occurrences [AOO]."

NUREG-0800, "Standard Review Plan for the Review of Safety Analysis Reports for Nuclear Power Plants," (SRP) Section 4.2, "Fuel System Design" and Section 4.4, "Thermal and Hydraulic Design," give the criteria and practices found acceptable by the NCR staff for meeting GDC 10.

In terms of the specific evaluation of Appendix A to EMF-92-153(P)(A), as stated in SRP Sections 4.2 and 4.4, the NRC staff finds that CHF correlations should be developed such that there is a 95 percent probability at the 95 percent confidence level that the hot rod in the core does not experience DNB during normal operation or AOOs.

3.0 TECHNICAL EVALUATION

FANP used a series of methods to justify extending the range of applicability of the HTP-DNB correlation. Desired was the extension of both the upper and lower limits of pressure and thermodynamic quality and the extension of the lower limit for mass velocity. For extending the regions of upper quality, lower mass velocity, and lower pressure, a new database consisting of additional experimental data was used to compare with CHF predictions made using the HTP-DNB correlation. These experimental data points were recorded experimental CHF occurrences that were gathered but not used in developing the HTP-DNB correlation. For extending the regions that remained, regions of lower quality and higher pressure, different techniques, such as trend analysis, extrapolation, and statistics were employed as justification. The following discussion addresses each of the methods presented and gives the rationale for the resulting conclusions.

The HTP-DNB correlation, as approved, was developed using a set of data points obtained in multiple tests conducted at the Columbia Heat Transfer Facility. In addition to this data, additional data points were also obtained in some of the tests but were not utilized in establishing the correlation. This "New" data was filtered to ensure that it adequately represented the full range of fuel design parameters. What resulted was a new database consisting of data points indicating measured CHF values for local conditions of 1400 pounds per square inch-atmosphere (psia) and ranging over the proposed upper quality and lower mass velocity regions. As a first step, the NRC staff independently verified the completeness and applicability of this new database in serving as a basis for making generic conclusions about the HTP-DNB correlation. The NRC staff used Stein's procedure (Reference 4) to determine if the new database contained enough points in the extended regions and a histogram plot to determine if the new database sufficiently represented the range of approved assembly geometries. The results of Stein's procedure showed that the new database was adequately populated in the extended regions. The histogram, comprised of the average

predicted to measured (P/M) CHF values for each of the experimental test sections, showed that the new database conservatively represented the test sections. Although there was no extended data for five of the tests, comparisons indicated that in no case did the differing geometry produce a non-conservative trend when the HTP-DNB correlation was applied to the extended data. Therefore, the NRC staff concludes that the new database is acceptable as a basis for assessing the predictive accuracy of the HTP-DNB correlation over the entire range of approved assembly geometries.

To justify extending the regions of upper quality, lower mass velocity, and lower pressure, the values describing the local conditions producing CHF were taken from the new database and entered into the HTP-DNB correlation's polynomial equation. The ranges of each of these independent variables were as follows: pressure values ranged from 1385 psia to 1430 psia, thermodynamic quality values ranged from -0.019 to 0.515, and mass velocity values ranged from 0.498 million pounds per hour per square foot (Mlb/hr-ft^2) to 3.542 Mlb/hr-ft^2. The resulting CHF predictions were then compared with the measured CHF values from the new database. The P/M ratios were plotted over the respective ranges of each of the independent variables. These plots showed no biasing trends and an average P/M ratio less than 1.0, implying predictive conservatism in the extended regions. The NRC staff used the tables of data provided by FANP to independently confirm these results and found that they were acceptable. The NRC staff concludes that, while data for pressures between 1415 psia and 1775 psia are missing, the new data at 1400 psia stand as verification that the HTP-DNB correlation adequately predicts CHF in the proposed extended regions of lower pressure, higher quality, and lower mass velocity.

To justify extending the region of higher pressure, FANP employed a sequence of techniques. First, an analysis of trends was used to establish which of the independent variables could be extrapolated. Next, a traditional correlation verification technique was used to determine the direction and length of the extrapolation. Finally, the physical consequences of extrapolating the given independent variables were examined. However, after a thorough review, the NRC staff finds this procedure unacceptable. None of the steps lead to the quantitative assurance of a 95 percent probability at a 95 percent confidence level that the fuel in the core would not experience DNB. Because the correlation is primarily a statistical fit to data, not a mechanistic expression of the physical behavior, the conclusions reached by FANP serve only to characterize the developing database.

4.0 CONCLUSION

The staff has reviewed Appendix A to TR EMF-92-153(P)(A) to assess the acceptability of the justifications therein for extending the range of applicability of the HTP-DNB correlation. The NRC staff concludes as follows:

(1) Based on the comparisons with the additional data, the quantitative statistical assurances continue to be met by the correlation in the regions of lower pressure, higher quality, and lower mass velocity. Therefore, the independent variables of the HTP-DNB correlation can be extended as depicted in Table 1. The HTP-DNB correlation safety limit will remain at 1.141 over these extended regions.

Table 1

Range of Independent Variables for the HTP-DNB Correlation with the Extension of the Upper Quality, Lower Mass Velocity, and Pressure Limits

Independent Variable	As Approved		Extended	
	Minimum Value	Maximum Value	Minimum Value	Maximum Value
System Pressure, psia	1775	2425	***1385***	2425
Mass Velocity, Mlb/hr-ft^2	0.936	3.573	***0.498***	3.573
Thermodynamic Quality	-0.125	0.358	-	***0.515***

(2) The necessary statistical assurances were not given for local coolant conditions where the pressure is greater than 2425 psia. Therefore, the HTP-DNB correlation's maximum pressure value must remain unchanged.

(3) Actions for analyzing the operating conditions outside of the approved ranges of the maximum pressure (2425 psia) but less than 2600 psia are stated below. Extrapolations below the minimum quality range using the process described in Reference 1 are permitted with no lower limit. Any other extrapolation requires a plant-specific review.

When pressures greater than the upper pressure limit of 2425 psia but less than 2600 psia are encountered, all of the local coolant conditions are calculated at the upper pressure limit of 2425 psia using the NRC-approved thermal hydraulic code and then used in the calculation of the HTP CHF.

5.0 REFERENCES

1. Letter from J. F. Mallay (FANP) to U.S. Nuclear Regulatory Commission (NRC), "Request for Review and Approval of Appendix A to EMF-92-153(P)(A), HTP: Departure From Nucleate Boiling Correlation for High Thermal Performance Fuel," dated May 19, 2004. (ADAMS Accession No. for cover letter ML042710379, for proprietary version of appendix A to report ML042710387, for non-proprietary version of appendix A to report ML042710381)

2. Letter from J. F. Mallay (FANP) to NRC, "Response to Request for Additional Information - Appendix A to EMF-92-153(P)(A), HTP: Departure From Nucleate Boiling Correlation for High Thermal Performance Fuel," dated September 30, 2004. (ADAMS Accession No. ML042780403)

3. EMF-92-153(P)(A) and Supplement 1, "HTP: Departure from Nucleate Boiling Correlation for High Thermal Performance Fuel," Siemens Power Corporation, March 1994. (ADAMS Accession No. for cover letter 9403240220, for non-proprietary version of report 9403240222, for proprietary version of report 9403240226)

4. Lurie, D., Moore, R. H., *Applying Statistics* (NUREG-1475), USNRC, dated February 28,1994. (ADAMS Accession No. 9405310242)

Principal Contributors: A. Attard
S. Marshall

Date: January 6, 2005

NRC Correspondence

FRAMATOME ANP

An AREVA and Siemens Company

FRAMATOME ANP, Inc.

September 30, 2004
NRC:04:055

Document Control Desk
U.S. Nuclear Regulatory Commission
Washington, D.C. 20555-0001

Response to Request for Additional Information – Appendix A to EMF-92-153(P)(A), "HTP: Departure From Nucleate Boiling Correlation for High Thermal Performance Fuel"

Ref.: 1. Letter, James F. Mallay (Framatome ANP) to Document Control Desk (NRC), "Request for Review and Approval of Appendix A to EMF-92-153(P)(A), 'HTP: Departure From Nucleate Boiling Correlation for High Thermal Performance Fuel'," NRC:04:025, May 19, 2004.

The NRC requested additional information to facilitate the completion of its review of the Framatome ANP topical report, Appendix A to EMF-92-153(P)(A) (Reference 1), in an e-mail on August 10, 2004. The questions along with the responses are presented in the attachments to this letter. Attachment A is the proprietary version of the responses. Attachment B is the non-proprietary version.

Framatome ANP considers some of the material contained in Attachment A to be proprietary. The affidavit provided with the original submittal of the topical report satisfies the requirements of 10 CFR 2.390(b) to support the withholding of this information from public disclosure.

Very truly yours,

James F. Mallay, Director
Regulatory Affairs

Enclosures

cc: M. C. Honcharik
Project 728

FRAMATOME ANP, Inc.
3315 Old Forest Road, P.O. Box 10935 – Lynchburg, VA 24506-0935
Tel.: 434-832-3000 Fax: 434-832-0622 www.us.framatome-anp.com

Attachment A (proprietary) has been omitted from EMF-92-153(NP)(A)

Attachment B

RESPONSES

REQUEST FOR ADDITIONAL INFORMATION
EMF 92-153, APPENDIX A
HTP: Departure From Nucleate Boiling Correlation for High Thermal Performance Fuel

Question 1: *The submitted Appendix A of EMF-92-153(P)(A) gives justifications for encroaching upon regions outside the established limits of the HTP-CHF correlation. However, in order to make the quantitative statement that there is a 95% probability at the 95% confidence level that the core does not experience DNB, the HTP-CHF correlation's high degree of uncertainty in the proposed regions of lower quality and higher pressure must be quantified. Please provide technical and quantitative justification for arriving at these uncertainties, and demonstrate the incorporation of the uncertainties in the DNBR Design Limit.*

Response 1:

BWU-I Data – Columbia University Heat Transfer Research Facility – Westinghouse Grids

Quality at CHF	Number of Data	Mean M/P CHF	Standard Deviation
Below 5%	459	1.000	0.084
5% to 10%	384	1.018	0.093
10% to 15%	391	0.985	0.103
Above 15%	264	0.993	0.127

BWU-N Data – Alliance Research Center – Babcock and Wilcox Grids

Quality at CHF	Number of Data	Mean M/P CHF	Standard Deviation
Below 5%	225	1.006	0.068
5% to 10%	181	0.998	0.071
10% to 15%	218	1.001	0.078
15% to 20%	158	1.006	0.097
20% to 25%	104	0.975	0.135
Above 25%	167	1.008	0.151

BWU-I Data – Columbia University Heat Transfer Research Facility – Westinghouse Grids

Pressure, psia	Number of Data	Mean M/P CHF	Standard Deviation
1250 - 1649	228	1.013	0.109
1650 - 1949	334	0.990	0.105
1950 - 2249	398	0.998	0.098
Above 2250	538	1.000	0.094

BWU-N Data – Alliance Research Center – Babcock and Wilcox Grids

Pressure, psia	Number of Data	Mean M/P CHF	Standard Deviation
1250 - 1649	193	1.011	0.113
1650 - 1949	198	0.989	0.093
1950 - 2249	447	1.000	0.096
Above 2250	215	1.004	0.102

Question 2: *The design limit MDNBR for the BWU-Z correlation with Mark-BW17 grids is specified in BAW-10199(P)(A) as 1.20 for pressures between 700 and 1000 psia, and 1.59 for pressures between 400 and 700 psia. The increase in the design limit was established because the corresponding data set did not quite span the full range of intended application for the correlation. Why wasn't a similar methodology proposed for extending the design limit of the HTP correlation in regions of lower quality and higher pressure?*

Response 2: The BWU-Z data base was basically a high pressure data set. The pressure range 1400 to 1500 psia is considered the lower grouping of high pressure PWR CHF data (i.e., Westinghouse, Combustion, B&W, etc.). A small group of data was taken and grouped at lower pressures. When BAW-10199P-A (Reference 2) was reviewed by the NRC, the reviewer noticed that the data sets for the low pressure groupings contained very few data points – 6 at 400 psia nominal, 20 at 700 psia nominal and 40 at 1000 to 1200 nominal. The reviewer asked for one sided tolerance limits at the lower pressures. The following table develops these limits. These limits are also shown in the NRC SER (Table 1, page v) and in the body of the main report (Table 4-1, page 4-5).

Nominal Pressure, psia	Number of Data	Mean M/P CHF Ratio	M/P Standard Deviation	95/95 Owens One Sided K (Ref. 3)	Derived Design Limit
400	6	0.8739	0.0661	3.708	1.590
700	20	1.0413	0.0866	2.396	1.199
1000 – 1200	40	1.0556	0.0787	2.125	1.126
1500 and above	464	0.9976	0.0902	1.768	1.193
All Data – See page 4-3 of BAW-10199P-A	530	1.0022	0.09268	1.762	1.193

In the report EMF-92-153(P)(A) 1800 psia was chosen as the nominal lower pressure group (actual measured lower limit value of 1775 psia). The data base in this report has a significantly large number of data points in each nominal pressure grouping (each with a mean P/M ratio close to 1.0). Thus, a separate statistical limit was not required for various pressure groupings.

Question 3: *Explain why none of the "new" 159 data was used, as was done in sec. A.4.3.2 of Appendix A, in the extrapolation justifications given in sections A.4.4.1 and A.4.4.2 ?*

Response 3: The 159 "new" data were of lower pressure than that of the original HTP data base and thus the thermodynamic qualities at CHF tended to be higher. No new low quality data was obtained from these 159 data points (A.4.4.1). Similarly, the "new" data was at the other end of the spectrum from an extension to high pressure.

References

1. Dan Lurie and Roger H. Moore, Applying Statistics, United States Nuclear Regulatory Commission, 1994 (page 14-41).

2. BAW-10199P-A, "The BWU CHF Correlations," Babcock and Wilcox, August 1996.

3. D. B. Owens, "Factors for One-Sided Tolerance Limits and for Variables Sampling Plans," Sandia Corporation Monograph, SCR-607, March 1963.

FRAMATOME ANP

An AREVA and Siemens Company

FRAMATOME ANP, Inc.

May 19, 2004
NRC:04:025

Document Control Desk
ATTN: Chief, Planning, Program and Management Support Branch
U.S. Nuclear Regulatory Commission
Washington, D.C. 20555-0001

Request for Review and Approval of Appendix A to EMF-92-153(P)(A), "HTP: Departure From Nucleate Boiling Correlation for High Thermal Performance Fuel"

Ref.: 1. EMF-92-153(P)(A), "HTP: Departure from Nucleate Boiling Correlation for High Thermal Performance Fuel," March 1994.

Framatome ANP requests the NRC's review and approval of a revision to the topical report EMF-92-153(P)(A), "HTP: Departure From Nucleate Boiling Correlation for High Thermal Performance Fuel," Reference 1. The revision consists of an appendix to the NRC-approved topical report in order to extend the range of applicability of the independent variables in the correlation.

The appendix, which justifies the extension of the range of applicability of the independent variables in the correlation, is presented in Attachment A to this letter. Framatome ANP will prepare a complete revision of the Reference 1 topical report that will incorporate this appendix following NRC review and approval of the appendix. The revised topical report will also contain a modification to the table of contents to reflect the new appendix and a revision to the information in the summary of the topical report to reflect the new range of applicability approved by the NRC

The need for, and basic approach for, the extension of the range of applicability of the correlation was discussed in a meeting with the NRC on April 8, 2004. The extended range of applicability of the correlation is required because the currently approved ranges are exceeded in some plant specific analyses. The fact that these limitations are exceeded has been documented in our condition report system. Framatome ANP requests that the safety evaluation report for this appendix be issued by November 2004 in order to promptly resolve the issue.

A proprietary and non-proprietary version of this letter and its attachment are provided on the enclosed CDs.

FRAMATOME ANP, Inc.
3315 Old Forest Road, P.O. Box 10935 – Lynchburg, VA 24506-0935
Tel.: 434-832-3000 Fax: 434-832-0622 www.us.framatome-anp.com

Framatome ANP considers some of the material contained in the enclosed documents to be proprietary. As required by 10 CFR 2.390(b), an affidavit is enclosed to support the withholding of the information from public disclosure.

Very truly yours,

James F. Mallay, Director
Regulatory Affairs

Enclosures

cc: M. C. Honcharik
Project 728

AFFIDAVIT

COMMONWEALTH OF VIRGINA)
) ss.
CITY OF LYNCHBURG)

1. My name is James F. Mallay. I am Director, Regulatory Affairs, for Framatome ANP ("FANP"), and as such I am authorized to execute this Affidavit.

2. I am familiar with the criteria applied by FANP to determine whether certain FANP information is proprietary. I am familiar with the policies established by FANP to ensure the proper application of these criteria.

3. I am familiar with the FANP attachment to letter NRC:04:025, Appendix A, "Extension of the HTP CHF Correlation Ranges," sent to the NRC on May 18, 2004, and referred to herein as "Document." Information contained in this Document has been classified by FANP as proprietary in accordance with the policies established by FANP for the control and protection of proprietary and confidential information.

4. This Document contains information of a proprietary and confidential nature and is of the type customarily held in confidence by FANP and not made available to the public. Based on my experience, I am aware that other companies regard information of the kind contained in this Document as proprietary and confidential.

5. This Document has been made available to the U.S. Nuclear Regulatory Commission in confidence with the request that the information contained in this Document be withheld from public disclosure.

6. The following criteria are customarily applied by FANP to determine whether information should be classified as proprietary:

(a) The information reveals details of FANP's research and development plans and programs or their results.

(b) Use of the information by a competitor would permit the competitor to significantly reduce its expenditures, in time or resources, to design, produce, or market a similar product or service.

(c) The information includes test data or analytical techniques concerning a process, methodology, or component, the application of which results in a competitive advantage for FANP.

(d) The information reveals certain distinguishing aspects of a process, methodology, or component, the exclusive use of which provides a competitive advantage for FANP in product optimization or marketability.

(e) The information is vital to a competitive advantage held by FANP, would be helpful to competitors to FANP, and would likely cause substantial harm to the competitive position of FANP.

7. In accordance with FANP's policies governing the protection and control of information, proprietary information contained in this Document has been made available, on a limited basis, to others outside FANP only as required and under suitable agreement providing for nondisclosure and limited use of the information.

8. FANP policy requires that proprietary information be kept in a secured file or area and distributed on a need-to-know basis.

9. The foregoing statements are true and correct to the best of my knowledge, information, and belief.

SUBSCRIBED before me this 19th

day of May, 2004.

Ella F. Carr-Payne

Ella F. Carr-Payne
NOTARY PUBLIC, STATE OF VIRGINIA
MY COMMISSION EXPIRES: 8/31/05

ELLA F. CARR-PAYNE
Notary Public
Commonwealth of Virginia
My Commission Exps. Aug. 31, 2005

Appendix A is attached at the end of EMF-92-153(NP)(A), Revision 1

Pages from EMF-92-153(NP)(A), Revision 0 that were replaced in EMF-92-153(NP)(A), Revision 1

TABLE OF CONTENTS

Section		Page
1.0	**INTRODUCTION AND SUMMARY**	1
1.1	The HTP Correlation Data Base	2
1.2	Comparison of HTP Correlation Predictions to Experimental Measurements	3
2.0	**CHARACTERISTICS OF THE HTP DNB CORRELATION**	14
2.1	HTP Correlation	14
2.2	Fuel Design Factor	15
2.3	Non-Uniform Axial Power Distribution Correction Factor	17
2.4	Procedure for Use of the HTP Correlation	18
3.0	**EXPERIMENTAL DATA SUPPORTING THE HTP DNB CORRELATION**	19
3.1	Design Features of Test Assemblies	19
3.2	Thermal Hydraulic Models of Test Assemblies	20
3.3	Calculation Results and Analysis of Residuals	21
4.0	**STATISTICAL CHARACTERIZATION OF THE HTP DNB CORRELATION**	186
5.0	**REFERENCES**	187

TABLE 1.1 RANGE OF COOLANT CONDITIONS SPANNED BY THE HTP CORRELATION

Variable	Minimum Value	Maximum Value
Pressure (psia)	1775	2425
Local Mass Flux (Mlb/hr/ft^2)	0.936	3.573
Inlet Enthalpy (Btu/lb)	382.3	649.9
Local Quality	-0.125	0.358

TABLE 1.2 NOMINAL RANGE OF FUEL DESIGN PARAMETERS IN HTP CORRELATION DATA BASE

Parameter	Value
Fuel Rod Diameter, in.	0.360 - 0.440
Fuel Rod Pitch, in.	0.496 - 0.580
Axial Spacer Span, in.	10.5 - 26.2
Hydraulic Diameter, in.	0.4571 - 0.5334
Heated Length, ft.	9.8 - 14.0

SIEMENS

EMF-92-153(NP)(A)

EMF-92-153(NP)(A)
Supplement 1

HTP: Departure From Nucleate Boiling Correlation For High Thermal Performance Fuel

March 1994

Siemens Power Corporation
Nuclear Division

Issue Date: 3/8/94

EMF-92-153(NP)(A)	HTP: Departure From Nucleate Boiling Correlation for High Thermal Performance Fuel
EMF-92-153(NP)(A) Supplement 1	Correspondence

NUCLEAR REGULATORY COMMISSION DISCLAIMER

IMPORTANT NOTICE REGARDING CONTENTS AND USE OF THIS DOCUMENT

PLEASE READ CAREFULLY

This technical report was derived through research and development programs sponsored by Siemens Power Corporation. It is being submitted by Siemens Power Corporation to the U.S. Nuclear Regulatory Commission as part of a technical contribution to facilitate safety analyses by licensees of the U.S. Nuclear Regulatory Commission which utilize Siemens Power Corporation-fabricated reload fuel or other technical services provided by Siemens Power Corporation for light water power reactors and it is true and correct to the best of Siemens Power Corporation's knowledge, information, and belief. The information contained herein may be used by the U.S. Nuclear Regulatory Commission in its review of this report, and under the terms of the respective agreements, by licensees or applicants before the U.S. Nuclear Regulatory Commission which are customers of Siemens Power Corporation in their demonstration of compliance with the U.S. Nuclear Regulatory Commission's regulations.

Siemens Power Corporation's warranties and representations concerning the subject matter of this document are those set forth in the agreement between Siemens Power Corporation and the customer to which this document is issued. Accordingly, except as otherwise expressed provided in such agreement, neither Siemens Power Corporation nor any person acting on its behalf:

A. Makes any warranty, or representation, express or implied, with respect to the accuracy, completeness, or usefulness of the information contained in this document, or that the use of any information, apparatus, method or process disclosed in this document will not infringe privately owned rights, or

B. Assumes any liabilities with respect to the use of, or for damages resulting from the use of, any information, apparatus, method or process disclosed in this document.

UNITED STATES
NUCLEAR REGULATORY COMMISSION
WASHINGTON, D.C. 20555-0001

December 28, 1993

Mr. R. A. Copeland, Manager
Product Licensing
Siemens Power Corporation
2101 Horn Rapids Corporation
P. O. Box 130
Richland, WA. 99352-0130

Dear Mr. Copeland:

SUBJECT: ACCEPTANCE FOR REFERENCING OF SIEMENS POWER CORPORATION TOPICAL REPORT EMF-92-153(P), "HTP: DEPARTURE FROM NUCLEATE BOILING CORRELATION FOR HIGH THERMAL PERFORMANCE FUEL"

The staff has reviewed topical report EMF-92-153(P) submitted by Siemens Power Corporation (SPC) in a letter of September 28, 1992. This report describes the bases for the SPC departure from nucleate boiling correlation for the PWR high thermal performance fuel design. It extends the currently approved ANFP designs to other fuel types.

The report is acceptable for referencing in license applications to the extent specified and under the limitations delineated in the report and the NRC's associated technical evaluation. The evaluation defines the basis for accepting the request.

The staff will not repeat its review of matters described in the SPC request and will find those acceptable when they are referenced in license applications, except to ensure that the material presented applies to the plant involved. Staff acceptance applies only to the matters described in the SPC request.

In accordance with procedures established in NUREG-0390, the staff requests that SPC publish accepted versions of this submittal, proprietary and non-proprietary, within 3 months of receiving this letter. The versions will incorporate this letter and the enclosed evaluation between the title page and the abstract. The accepted versions shall include an "A" (designating accepted) after the report identification symbol.

If our criteria or regulations change, so that our conclusions as to the acceptability of the report are invalidated, SPC and the applicants referencing the topical report should revise and resubmit their respective documentation, or submit justification for the continued effective applicability of the topical report without a revision of their respective documentation.

Sincerely,

Ashok C. Thadani, Director
Division of Systems Safety and Analysis
Office of Nuclear Reactor Regulation

Enclosure:
SPC Repart EMF-92-153(P) Evaluation

UNITED STATES
NUCLEAR REGULATORY COMMISSION
WASHINGTON, D.C. 20555-0001

ENCLOSURE 1

SAFETY EVALUATION OF SIEMENS POWER CORPORATION'S (SPC's) REPORT "HTP: DEPARTURE FROM NUCLEATE BOILING CORRELATION FOR HIGH THERMAL PERFORMANCE FUEL"

1.0 INTRODUCTION

In a letter (Reference 1) from R. A. Copeland (SPC) to USNRC dated September 28, 1992, Siemens Power Corporation requested an NRC review of SPC Topical Report EMF-92-153(P), "HTP: Departure From Nucleate Boiling Correlation for High Thermal Performance Fuel." This new DNB correlation is an extension of the previously approved ANF DNB correlation (Reference 2), which was developed from test sections 12 feet in heated length and representative of HTP designs for Westinghouse plants. The HTP correlation reflects the results of additional departure from nucleate boiling (DNB) testing of high thermal performance (HTP) fuel designs for Pressurized-Water reactors (PWRs).

The NRC staff was assisted in this review by its consultant, International Technical Services, Inc. (ITS). The staff reviewed the SPC submittal (Reference 1) and the response by SPC to the staff's August 5, 1993, letter requesting additional information on SPC Topical Report EMF-92-153(P) (Reference 3). The staff adopted the findings recommended in its consultant's technical evaluation report (Enclosure 2).

2.0 EVALUATION

The evaluation is given in Enclosure 2 which includes HTP test database description, HTP DNB correlation development, and comparison to measurement.

3.0 CONCLUSION

On the basis of the staff's review in conjunction with our consultant's evaluation (Enclosure 2), the NRC concludes that the HTP correlation is acceptable subject to the following restrictions:

(1) The HTP CHF correlation is applicable to fuels whose design characteristics fall within the correlation database in Table 2.

(2) The application of the HTP correlation for DNB analysis is restricted to the operating conditions given in Table 1.

Table 1: Range of Coolant Conditions Spanned by the HTP Correlation

Pressure (psia)	1775 to 2425
Local Mass Flux (Mlb/hr/ft^2)	0.936 to 3.573
Inlet Enthalpy (Btu/lb)	382.3 to 649.9
Local Quality	-0.125 to 0.358

Table 2: Normal Range of Fuel Design Parameters in HTP Correlation Data Base

Fuel Rod Diameter (in.)	0.360 to 0.440
Fuel Rod Pitch (in.)	0.496 to 0.580
Axial Spacer Span (in.)	10.5 to 26.2
Hydraulic Diameter (in.)	0.4571 to 0.5334
Heated Length (ft.)	8.0 to 14.0

4.0 REFERENCES

1. SPC Letter LB/RAC:115:92 from R. A. Copeland to USNRC submitting SPC Report EMF-92-153(P), "HTP: Departure From Nucleate Boiling Correlation for High Thermal Performance Fuel," September 28, 1992.

2. ANF-1224(P)(A), and Supplement 1, "Departure From Nucleate Boiling Correlation for High Thermal Performance Fuel," April 1990.

3. SPC Letter from R. A. Copeland to R. C. Jones (USNRC), "Response to NRC Questions on EMF-92-153(P)," RAC:93:131, August 20, 1993.

ENCLOSURE 2

ITS/NRC/93-7

TECHNICAL EVALUATION
HTP: DEPARTURE FROM NUCLEATE BOILING CORRELATION
FOR HIGH THERMAL PERFORMANCE FUEL
EMF-92-153(P)
FOR
SIEMENS POWER CORPORATION

1.0 INTRODUCTION

EMF-92-153(P), dated September 1992 (Ref. 1), was submitted by Siemens Power Corporation (SPC) for NRC review and approval. Additional information was submitted on August 20, 1993 (Ref. 2). This topical report documents the development of the High Thermal Performance (HTP) departure from nucleate boiling (DNB) correlation for use in DNB analysis of high thermal performance fuels for PWRs.

The subject topical report extends the Siemens' previously submitted and approved ANFP CHF correlation (Ref. 3) for applications in DNB analysis of Westinghouse fuels to other fuel designs including HTP fuel for CE plants. The use of ANFP was limited to the more typical Westinghouse fuels because the data base on which ANFP was based consisted only of test sections 12 feet in heated length and represented high thermal performance designs for Westinghouse plants. Siemens, in developing the HTP correlation, incorporated additional data by including test sections with heated lengths varying from 7.9 feet to 14 feet. It is the intent of Siemens to use the HTP (Ref. 1) and ANFP (Ref. 3) correlations for HTP fuel in PWRs covering different ranges of conditions and fuel designs.

The purpose of this review, based upon a review of the submitted materials (Refs. 1 and 2), is to determine acceptability of the HTP correlation for use with the fuel characteristics in the range proposed by SPC (Tables 1 and 2).

2.0 SUMMARY OF TOPICAL REPORT

The topical report EMF-92-153(P) documents development of SPC's HTP DNB correlation for use in DNB analysis of high performance fuels in PWRs. HTP represents an extension of the previously approved ANFP correlation in that the test data base for ANFP included typical Westinghouse design fuel characteristics, whereas in development of HTP, SPC included representative HTP designs for non-Westinghouse HTP fuels.

The data from a high pressure test loop at Columbia University's Heat Transfer Research Facility were used as a data base for the HTP correlation development. The HTP data base consists of data from 16 test sections: 6

test sections representing the typical Westinghouse HTP designs used for ANFP development and the other 10 test sections including sections representing other vendors' HTP designs in heated lengths, power shapes, presence of spacers and, in some cases, containing intermediate flow mixers (IFMs).

A complete summary of the measured data and the predicted values of relevant variables to the development of the correlation are provided in the topical report.

Dependence of the HTP correlation on fuel design parameters is also described in the topical report. Comparison of correlation predictions to experimental measurements are provided as qualification of its adequacy. The determination of the 95/95 safety limit for HTP is discussed in the subject topical report (Ref. 1).

3.0 EVALUATION

3.1 HTP Test Data Base Description

The HTP Correlation data base consists of 1479 data points from 16 tests performed in a high pressure test loop at the Columbia University Heat Transfer Research Facility. Six of these test sections were those used in the development of the ANFP correlation.

These test section characteristics were varied to represent fuel array design for 14x14 through 17x17 rod arrays using both uniform and non-uniform axial power shapes. The radial power distribution was non-uniform for all test assemblies. Rod positions were maintained by HTP spacers. The tests were conducted with assemblies with and without intermediate flow mixers (IFMs). The heated lengths of test assemblies varied from 7.9 to 14 feet.

Tables 1 and 2 summarize the flow conditions used for the HTP correlation data base and the range of fuel parameters in the data base, respectively. The pressure range covered the higher end of the spectrum when compared to that in the ANFP data base. Similarly the inlet enthalpy remained higher than that in the ANFP data base. Therefore, the range of applicability of the HTP correlation is different from that of the ANFP correlation.

The maximum cosine axial power peaking factor considered in the tests is 1.474. This value is slightly higher than the CE-1 correlation, however, it is lower than the WRB-1 or BWC correlation.

Thermocouples are employed to detect the occurrence of DNB in the tests.

A complete summary of the measured data is provided in the topical report.

3.2 HTP DNB Correlation Development

The correlation is an empirically derived function of the local coolant thermodynamic state and mass flux at which DNB is observed to occur in the experiment. The base correlation is developed based upon local coolant conditions at the point of DNB predicted from test data for the uniform axial

power distribution. The local coolant conditions are calculated with the approved XCOBRA-IIIC computer code.

The predicted DNB heat flux is modified by factors which account for the effects of non-uniform axial power distribution and fuel assembly design parameters. This aspect is a departure from the formulation of the ANFP correlation. The detailed descriptions and dependence of different parameters in the equation for the predicted DNB heat flux are presented in Chapter 2.0 of the subject topical report.

A three-step procedure for the use of the HTP correlation is outlined in Section 2.4 of Reference 1.

3.3 Comparison to Measurement

The approved XCOBRA-IIIC computer code was used to predict DNB heat fluxes to be compared against the measured heat fluxes. The key variables measured at the point of DNB such as inlet temperature, inlet mass flux, exit pressure and bundle power were used as boundary conditions in the XCOBRA-IIIC calculations.

Comparison between the predicted location of DNB and the heated rod and thermocouple number at which the primary DNB indication was recorded indicated the adequacy of the model.

The subject topical report summarizes the predicted variables relevant to the development of the correlation.

The predicted over measured (P/M) heat fluxes were plotted for all 16 tests to indicate the degree of agreement between the prediction using the HTP correlation and the measured data. The plots showed good agreement in 13 tests and for the other three cases nearly all the data fell within the 95/95 tolerance limit lines.

In Reference 2, SPC compared the predictive capability of the HTP and ANFP correlations using mean P/M ratios for 6 test sections common to these correlations. Table 8 in Reference 2 indicates that in four out of 6 cases larger DNB heat fluxes were predicted by the use of the HTP correlation than by the ANFP correlation; however, all were within a standard deviation of each other.

The frequency distribution of the P/M ratios for the entire data base was used to determine the 95/95 safety limit for the HTP correlation using a distribution free method, the same method which had been used to determine the ANFP correlation limit.

4.0 Conclusions

We reviewed the subject topical report, together with Siemens' responses, to determine acceptability of the HTP correlation for use in DNB analysis of the High Thermal Performance fuels with the following conclusions:

(a) The HTP CHF correlation is applicable to fuels whose design characteristics fall within the correlation data base in Table 2.

(b) The application of the HTP correlation for DNB analysis is restricted to the operating conditions given in Table 1.

(c) The HTP correlation limit was determined to be as stated in the topical report (Ref. 1).

5.0 REFERENCES

1. "HTP: Departure from Nucleate Boiling Correlation for High Thermal Performance Fuel," EMF-92-153(P), September 1992.

2. Letter from R.A. Copeland (SPC) to R.C. Jones (USNRC), Attachment, "Responses to NRC Questions on EMF-92-153(P)," August 20, 1993.

3. "Departure from Nucleate Boiling Correlation for High Performance Fuel," ANF-1224(P)(A) Supplement 1, April 1990.

TABLE 1 RANGE OF COOLANT CONDITIONS SPANNED BY THE HTP CORRELATION

Variable	Minimum Value	Maximum Value
Pressure (psia)	1775	2425
Local Mass Flux (Mlb/hr/ft^2)	0.936	3.573
Inlet Enthalpy (Btu/lb)	382.3	649.9
Local Quality	-0.125	0.358

TABLE 2 NOMINAL RANGE OF FUEL DESIGN PARAMETERS IN HTP CORRELATION DATA BASE

Parameter	Value
Fuel Rod Diameter, in.	0.360 - 0.440
Fuel Rod Pitch, in.	0.496 - 0.580
Axial Spacer Span, in.	10.5 - 26.2
Hydraulic Diameter, in.	0.4571 - 0.5334
Heated Length, ft.	8.0 - 14.0

Siemens Power Corporation

EMF-92-153(NP)(A)
Revision 0

Issue Date: 3/8/94

HTP: Departure From Nucleate Boiling Correlation for High Thermal Performance Fuel

Prepared by

F. T. Adams, Senior Engineer
Product Development and Testing

September 1992

NUCLEAR REGULATORY COMMISSION DISCLAIMER

IMPORTANT NOTICE REGARDING CONTENTS AND USE OF THIS DOCUMENT

PLEASE READ CAREFULLY

This technical report was derived through research and development programs sponsored by Siemens Power Corporation. It is being submitted by Siemens Power Corporation to the U.S. Nuclear Regulatory Commission as part of a technical contribution to facilitate safety analyses by licensees of the U.S. Nuclear Regulatory Commission which utilize Siemens Power Corporation-fabricated reload fuel or other technical services provided by Siemens Power Corporation for light water power reactors and it is true and correct to the best of Siemens Power Corporation's knowledge, information, and belief. The information contained herein may be used by the U.S. Nuclear Regulatory Commission in its review of this report, and under the terms of the respective agreements, by licensees or applicants before the U.S. Nuclear Regulatory Commission which are customers of Siemens Power Corporation in their demonstration of compliance with the U.S. Nuclear Regulatory Commission's regulations.

Siemens Power Corporation's warranties and representations concerning the subject matter of this document are those set forth in the agreement between Siemens Power Corporation and the customer to which this document is issued. Accordingly, except as otherwise expressed provided in such agreement, neither Siemens Power Corporation nor any person acting on its behalf:

A. Makes any warranty, or representation, express or implied, with respect to the accuracy, completeness, or usefulness of the information contained in this document, or that the use of any information, apparatus, method or process disclosed in this document will not infringe privately owned rights, or

B. Assumes any liabilities with respect to the use of, or for damages resulting from the use of, any information, apparatus, method or process disclosed in this document.

TABLE OF CONTENTS

Section		Page
1.0	**INTRODUCTION AND SUMMARY**	1
1.1	The HTP Correlation Data Base	2
1.2	Comparison of HTP Correlation Predictions to Experimental Measurements	3
2.0	**CHARACTERISTICS OF THE HTP DNB CORRELATION**	14
2.1	HTP Correlation	14
2.2	Fuel Design Factor	15
2.3	Non-Uniform Axial Power Distribution Correction Factor	17
2.4	Procedure for Use of the HTP Correlation	18
3.0	**EXPERIMENTAL DATA SUPPORTING THE HTP DNB CORRELATION**	19
3.1	Design Features of Test Assemblies	19
3.2	Thermal Hydraulic Models of Test Assemblies	20
3.3	Calculation Results and Analysis of Residuals	21
4.0	**STATISTICAL CHARACTERIZATION OF THE HTP DNB CORRELATION**	186
5.0	**REFERENCES**	187
SUPPLEMENT 1 CORRESPONDENCE		188
APPENDIX A: EXTENSION OF THE HTP CHF CORRELATION RANGES		

This document contains Siemens Power Corporation proprietary information and is subject to the restrictions on the first or title page.

LIST OF TABLES

TABLE PAGE

1.1 RANGE OF COOLANT CONDITIONS SPANNED BY THE HTP CORRELATION 5

1.2 NOMINAL RANGE OF FUEL DESIGN PARAMETERS CONSIDERED IN HTP CORRELATION DATA BASE 5

1.3 DESCRIPTION OF TEST SECTIONS COMPRISING THE HTP CORRELATION DATA 6

1.4 STATISTICAL SUMMARY OF HTP CORRELATION PREDICTIONS 9

3.1 AXIAL LOCATION OF HTP SPACERS AND IFMS 24

3.2 PHYSICAL FEATURES OF TEST SECTIONS 25

3.3 HEATER ROD POWER FACTORS BY TEST SECTION 28

3.4 NONUNIFORM AXIAL POWER FACTORS 34

3.5 THERMOCOUPLE LOCATION BY AXIAL ELEVATION 35

3.6 SPACER LOSS COEFFICIENTS BY TEST NUMBER 36

3.7 CALCULATION CONTROL AND OTHER PARAMETERS EMPLOYED 37

3.8 SUMMARY OF XCOBRA-IIIC SIMULATION RESULTS 38

3.9 SUMMARY OF MEASURED TEST CONDITIONS 98

LIST OF FIGURES

FIGURE		PAGE
1.1	HIGH THERMAL PERFORMANCE SPACER FOR PWR	10
1.2	INTERMEDIATE FLOW MIXER FOR PWR	11
1.3	COMPARISON OF PREDICTED DNB HEAT FLUX TO MEASURED DNB HEAT FLUX FOR ALL TESTS	12
1.4	HISTOGRAM OF P/M RATIOS FOR ALL TESTS	13
3.1	CROSS SECTION OF TEST BUNDLE AND ROD NUMBER SYSTEM FOR TESTS	163
3.2	CROSS SECTION OF TEST BUNDLE AND ROD NUMBER SYSTEM FOR TEST	164
3.3	CROSS SECTION OF TEST BUNDLE AND ROD NUMBER SYSTEM FOR TEST	165
3.4	PREDICTED/MEASURED DNB HEAT FLUX SHOWN AS FUNCTION OF TEST ASSEMBLY EXIT PRESSURE FOR ALL TESTS	166
3.5	PREDICTED/MEASURED DNB HEAT FLUX SHOWN AS FUNCTION OF LOCAL QUALITY FOR ALL TESTS	167
3.6	PREDICTED/MEASURED DNB HEAT FLUX SHOWN AS FUNCTION OF LOCAL MASS FLUX FOR ALL TESTS	168
3.7	PREDICTED/MEASURED DNB HEAT FLUX SHOWN AS FUNCTION OF INLET ENTHALPY FOR ALL TESTS	169
		170
		171
		172
		173
		174

LIST OF FIGURES (Continued)

FIGURE PAGE

. 175

. 176

. 177

. 178

. 179

. 180

. 181

. 182

. 183

. 184

. 185

1.0 INTRODUCTION AND SUMMARY

This document describes Siemens Power Corporation's Departure from Nucleate Boiling (DNB) correlation, HTP. This new DNB correlation is an extension of the previously approved ANFP DNB correlation[8], which was developed from test sections twelve feet in heated length and representative of HTP designs for Westinghouse plants. The HTP correlation reflects the results of additional DNB testing of High Thermal Performance (HTP) fuel designs for PWRs. The extended HTP data base includes test sections having heated lengths other than twelve feet and characteristic of HTP designs for CE plants. The HTP and ANFP correlations will be used for the HTP fuels as the approved XNB correlation[1] is used for standard fuel designs.

The improvement in DNB performance which characterizes HTP fuel designs is achieved by the use of HTP spacers and, in some cases, Intermediate Flow Mixers (IFMs). The HTP spacers incorporate flow mixing nozzles designed to impart a swirling component to the flow downstream of the spacer, an effect known to improve DNB performance.[2] IFMs are minimal grids placed at the midpoint of the span between HTP spacers to further promote effective thermal mixing of the coolant. IFMs also incorporate flow mixing nozzles. An HTP spacer and an IFM are depicted in Figures 1.1 and 1.2, respectively.

The data base for the HTP correlation was obtained in a high pressure test loop at Columbia University's Heat Transfer Research Facility. The data base includes

The HTP correlation is an empirically derived function of the local coolant thermodynamic state and mass flux at which DNB is observed to occur in experiment. The fluid conditions form of the correlation is the same as that of ANFP. The coefficients have been re-optimized to encompass the extended data base. The heat flux at which DNB occurs is predicted using local

coolant quality and mass flux calculated with the XCOBRA-IIIC subchannel code[3], and pressure. A minor dependence is also present. The form of the HTP correlation's dependence on the fuel design parameters differs from that of ANFP in order to describe the performance of the fuel designs not present in the ANFP data base. The HTP correlation contains factors to account for the effects of

The fuel also enter the correlation through terms.

The HTP correlation data base and the correlation prediction of the measured data are summarized in the following sub-sections. The HTP correlation is described in detail in Section 2 of this document. The experimental data base supporting the HTP correlation is discussed in Section 3. A geometric description of the individual test assemblies and a tabulation of key variables derived from the test data are also provided in Section 3 of this document. The statistical characterization of the correlation is presented in Section 4.

1.1 The HTP Correlation Data Base

The data base is comprised of at the Columbia University Heat Transfer Research Facility. The number of data points substantially exceeds supporting the ANFP correlation. The test assemblies are 5x5 or 6x6 rod arrays All test assemblies incorporate the HTP spacer.

The range of coolant conditions represented in the HTP correlation data base is shown in Table 1.1. The HTP correlation is applicable in this region. The coolant conditions commonly

encountered during steady-state operation and Anticipated Operational Occurrences (AOO) in PWRs are also within this range.

The range of fuel design parameters represented in the data base is shown in Table 1.2. The geometric features of the test sections are described in Table 1.3. The following variables are systematically varied in the data base:

The data base includes test assemblies with a variety of

Also varied in the data base are the The HTP correlation thus represents the effects of these parameters on the DNB heat flux.

1.2 Comparison of HTP Correlation Predictions to Experimental Measurements

The HTP correlation is used to predict the DNB heat flux for each test point in the data base. The ratio of predicted DNB heat flux to the measured heat flux (P/M ratio) is then known for each test point. Statistics describing the distribution of P/M ratios are employed as a measure of the ability of the correlation to predict the DNB heat flux. The overall mean and standard deviation of the distribution of P/M ratios is computed using methods described in Section 4. The distribution is characterized A statistical summary of the P/M ratios for the individual test sections is provided in Table 1.4.

A comparison of predicted DNB heat flux to measured DNB heat flux for the entire data base is given in Figure 1.3. Upper and lower solid lines on this plot enclose a band about the measured value. Two additional solid lines lie interior to the upper and lower limit lines. One represents the ideal case in which the predicted DNB heat flux is equal to the measured DNB heat flux. The second interior line represents a least squares fit of the predicted DNB heat flux as a function of the measured DNB heat flux. Because these interior lines differ only insignificantly, the correlation displays no significant residual bias.

The frequency distribution of the P/M ratios for the entire data base is depicted in Figure 1.4. The 95/95 safety limit for the HTP correlation derived using a as discussed in Section 4.0.

TABLE 1.1 RANGE OF COOLANT CONDITIONS SPANNED BY THE HTP CORRELATION

VARIABLE	MINIMUM VALUE	MAXIMUM VALUE
Pressure (psia)	1385	2425
Local Mass Flux (Mlb/hr/ft^2)	0.498	3.573
Inlet Enthalpy (Btu/lb)	382.3	649.9
Local Quality	-	0.515

TABLE 1.2 NOMINAL RANGE OF FUEL DESIGN PARAMETERS IN HTP CORRELATION DATA BASE

PARAMETER	VALUE
Fuel Rod Diameter, in.	0.360 – 0.440
Fuel Rod Pitch, in.	0.496 – 0.580
Axial Spacer Span, in.	10.5 – 26.2
Hydraulic Diameter, in.	0.4571 – 0.5334
Heated Length, ft.	9.8 – 14.0

This document contains Siemens Power Corporation proprietary information and is subject to the restrictions on the first or title page.

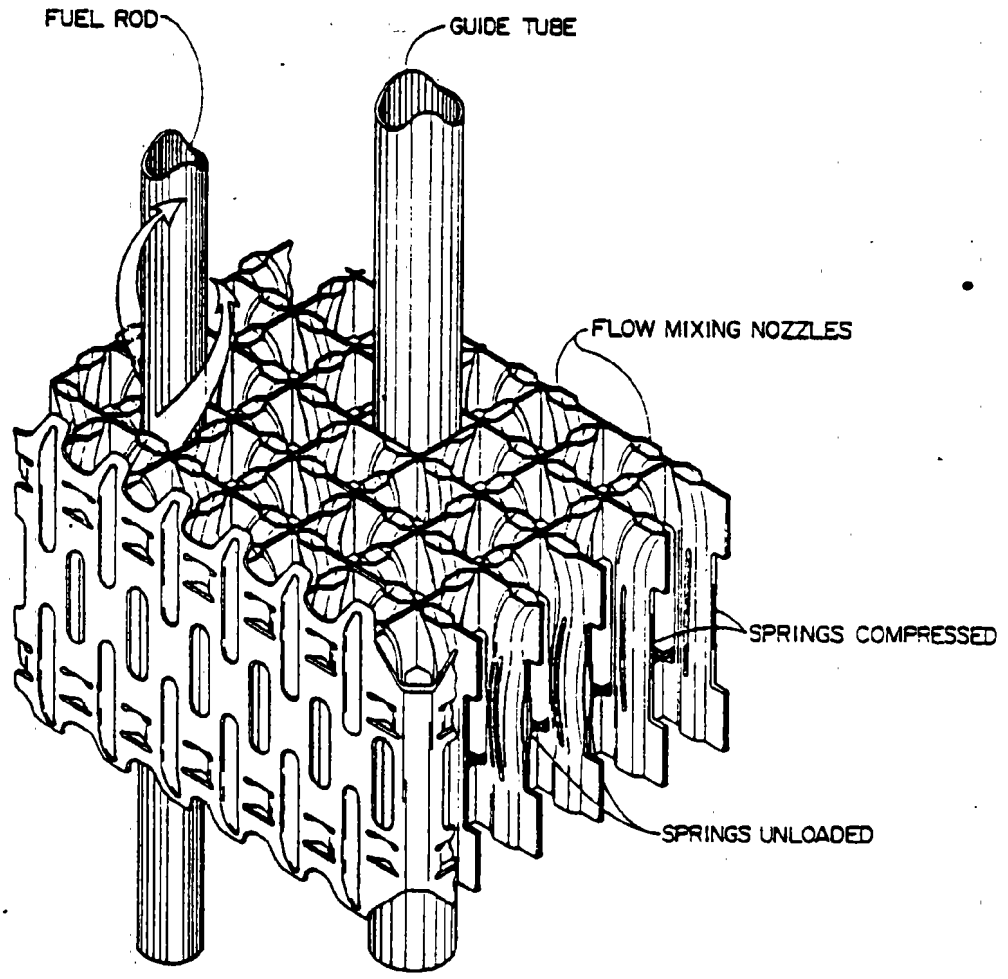

FIGURE 1.1 HIGH THERMAL PERFORMANCE SPACER FOR PWR

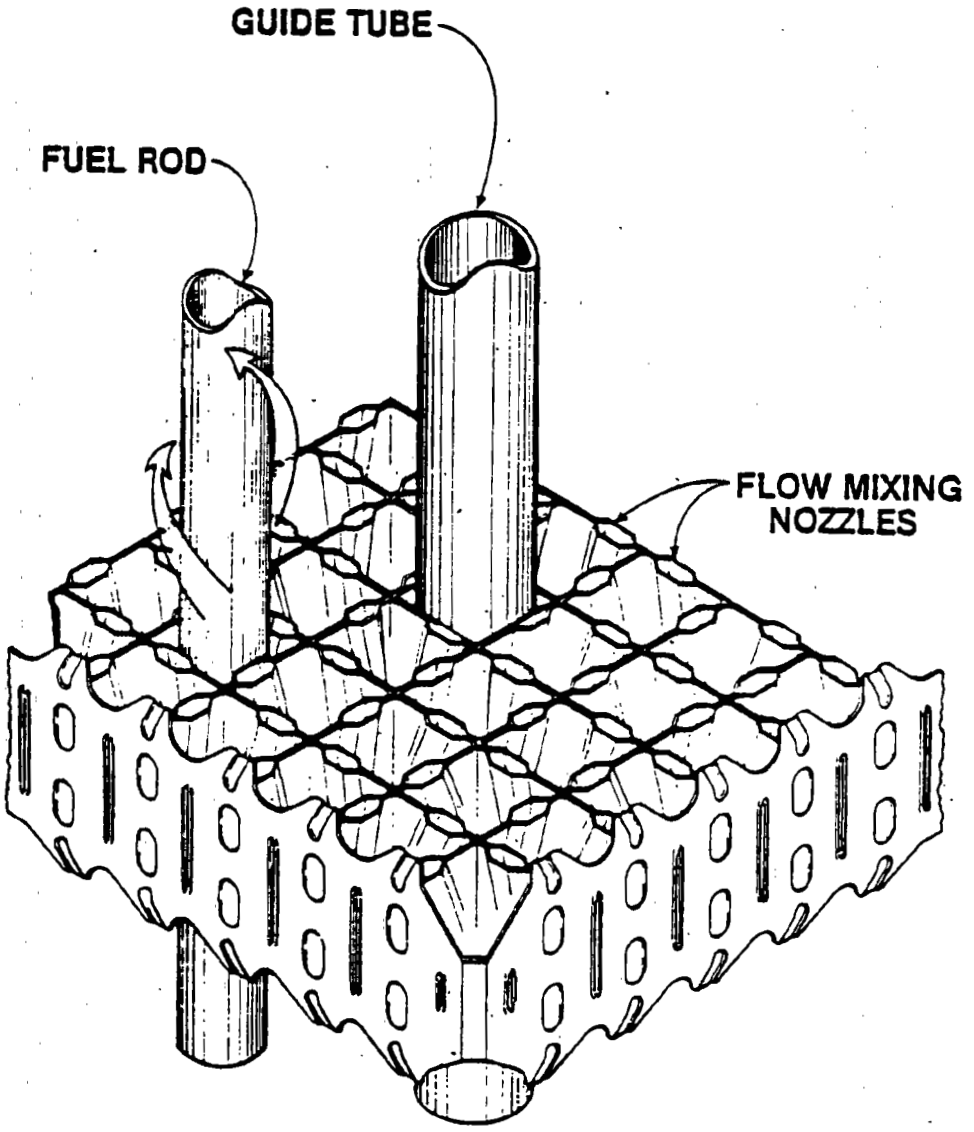

FIGURE 1.2 INTERMEDIATE FLOW MIXER FOR PWR

FIGURE 1.3 COMPARISON OF PREDICTED DNB HEAT FLUX TO MEASURED DNB HEAT FLUX FOR ALL TESTS

FIGURE 1.4 HISTOGRAM OF P/M RATIOS FOR ALL TESTS

2.0 CHARACTERISTICS OF THE HTP DNB CORRELATION

The Departure from Nucleate Boiling (DNB) is characterized by an abrupt decrease in the heat transfer due to steam blanketing at the rod surface. The heat flux at which DNB occurs is termed the DNB heat flux, and is a function of coolant conditions, axial power distribution, and fuel design parameters. In tests, the DNB heat flux is indicated by a rapid rod surface temperature excursion.

The HTP correlation is used to predict the DNB heat flux for High Thermal Performance (HTP) fuel designs. The correlation is a

The correlation is modified by factors which account for the effects of

The correlation is described in greater detail in the following section.

2.1 HTP Correlation

The HTP correlation is a function of

(2.1)

Qbase is the predicted DNB heat flux (MBtu/hr-sq. ft.) prior to application of the factors and the factor.

The XCOBRA-IIIC test section simulation models are described in Section 3.2

2.2 Fuel Design Factor

The predicted DNB heat flux obtained from Equation 2.1 is modified by terms which account for the effects of the

The factor FDF is found to effectively correlate these influences:

The DNB heat flux including effects, Q_{pred}, is obtained from Equation 2.1 and the factor FDF defined above:

(2.2)

2.3 Non-Uniform Axial Power Distribution Correction Factor

The predicted DNB heat flux obtained from the base correlation is modified as follows for

(2.3)

2.4 Procedure for Use of the HTP Correlation

The HTP DNB correlation is used as described in the following steps.

1) are calculated as a . The HTP fuel is characterized by a parameter The parameter is developed in

2) The DNB heat flux is calculated at each position within the assembly using determined in Step 1. The DNB heat flux is calculated using Equation 2.3.

3) The DNB ratio is calculated as the ratio of predicted DNB heat flux to operating heat flux at each position within the assembly. The predicted DNB heat flux is that calculated in Step 2, and the operating heat flux is assumed known for the application of interest. The Minimum DNB Ratio (MDNBR) is selected as the least value of the DNB ratio to occur in the assembly. The MDNBR is then used as a measure of the margin to DNB for the operating assembly.

3.0 EXPERIMENTAL DATA SUPPORTING THE HTP DNB CORRELATION

The data points supporting the HTP DNB correlation are obtained from programs performed at the Columbia University Heat Transfer Research Facility. The design features of the test assemblies and the models employed in the XCOBRA-IIIC[3] simulations of the tests are presented in this Section. The results of the calculations are also given in the following sections.

3.1 Design Features of Test Assemblies

The test assemblies are square 5x5 or 6x6 rod arrays.

The type of axial power distribution employed in each test is noted in Table 3.2. Non-uniform axial power distributions are tabulated as a function of axial position in Table 3.4 by test section. Axial position is given as fraction of heated length measured from the bottom of the heated length. The power factors represent the ratio of the heat flux at the given position to the average heat flux for the rod. The test series includes

Thermocouples are employed to detect the occurrence of DNB in the tests. They are located at the axial positions listed in Table 3.5. Thermocouples 1 and 2 for
are located on opposite sides of the rod.

3.2 Thermal Hydraulic Models of Test Assemblies

The local coolant conditions at the point of DNB are computed from the test assembly coolant conditions with the approved XCOBRA-IIIC computer code[3]. The XCOBRA-IIIC model includes a specification of the test assembly geometry and power peaking, single phase friction and component loss coefficient correlations, two-phase flow correlations, a turbulent mixing correlation, and appropriate calculation control parameters. The components of the models are discussed below.

The XCOBRA-IIIC model for each test employs a geometric description of the test assembly derived from the design parameters given in Tables 3.1 and 3.2 and Figures 3.1 through 3.3. Power peaking factors used in the models are those listed in Tables 3.3 and 3.4. The entire test assembly cross-section is modeled so that minor asymmetries in the radial power peaking distributions may be accurately represented.

The correlation and the coefficients for the HTP spacers and IFMs are listed in Table 3.6 by test section. The HTP spacer and IFM are developed from measurements taken in the Columbia University Heat Transfer Research Facility

The for the HTP spacers and IFMs

multiplier is employed. multiplier provides an accurate prediction of Use of multiplier is justified in an approved document.

The other correlations employed in

The parameter used in the calculations is expressed as

The value is obtained from data for the HTP fuel designs. The development of this value is described in of

Calculation control parameters and other standard calculation inputs are given in Table 3.7. The values used are in accord with standard practice for licensing calculations.

3.3 Calculation Results and Analysis of Residuals

The results of the XCOBRA-IIIC simulations of the test sections are presented in this section. Table 3.8 provides the key simulation results for each data point in each test campaign.

In this table are listed the run number, the computed value of the the computed value of the the measured the the measured and predicted DNB heat fluxes, the predicted elevation of DNB, and the computed value of the factor. The ratio of predicted DNB heat flux to measured DNB heat flux is listed in a column headed P/M (for Predicted over Measured). The is the of the at the measured The and are taken from the point of DNB as All test data points employed in the development of the correlation statistics are recorded in Table 3.8.

The key variables measured at the point of DNB are employed as boundary conditions in the These variables are listed in Table 3.9. In the table are listed the run number, the the the and the measured at DNB. The heater rod and thermocouple number at which the primary DNB indication occurred are also listed. The tables do not include runs in which the primary DNB indication occurred runs for which key variable values were or measured under conditions.

The residuals for all data are depicted in Figures 3.4 through 3.7. These figures are plots of the ratio as a function of the the the and the respectively. The overall residuals display no significant trends.

Figures 3.8 through 3.23 depict the DNB heat flux predicted with the HTP correlation versus the measured heat flux for each test in the data base. Good agreement is obtained. A plot of predicted DNB heat flux versus measured DNB heat flux for all data is shown in Figure 1.3. Upper and lower solid lines in these plots enclose a band of about the measured value.

In Figures 3.8 through 3.23, two additional solid lines lie interior to the upper and lower limit lines. One represents the ideal case in which the predicted DNB heat flux is equal to the measured DNB heat flux. The second interior line represents a least squares fit of the predicted DNB heat flux as a function of the measured DNB heat flux. Because these interior lines differ only insignificantly, the correlation displays no significant residual bias.

A review of the residual plots for the individual tests reveals no significant dependence of the residuals on the correlation variables.

Pages 24 through 162 deleted

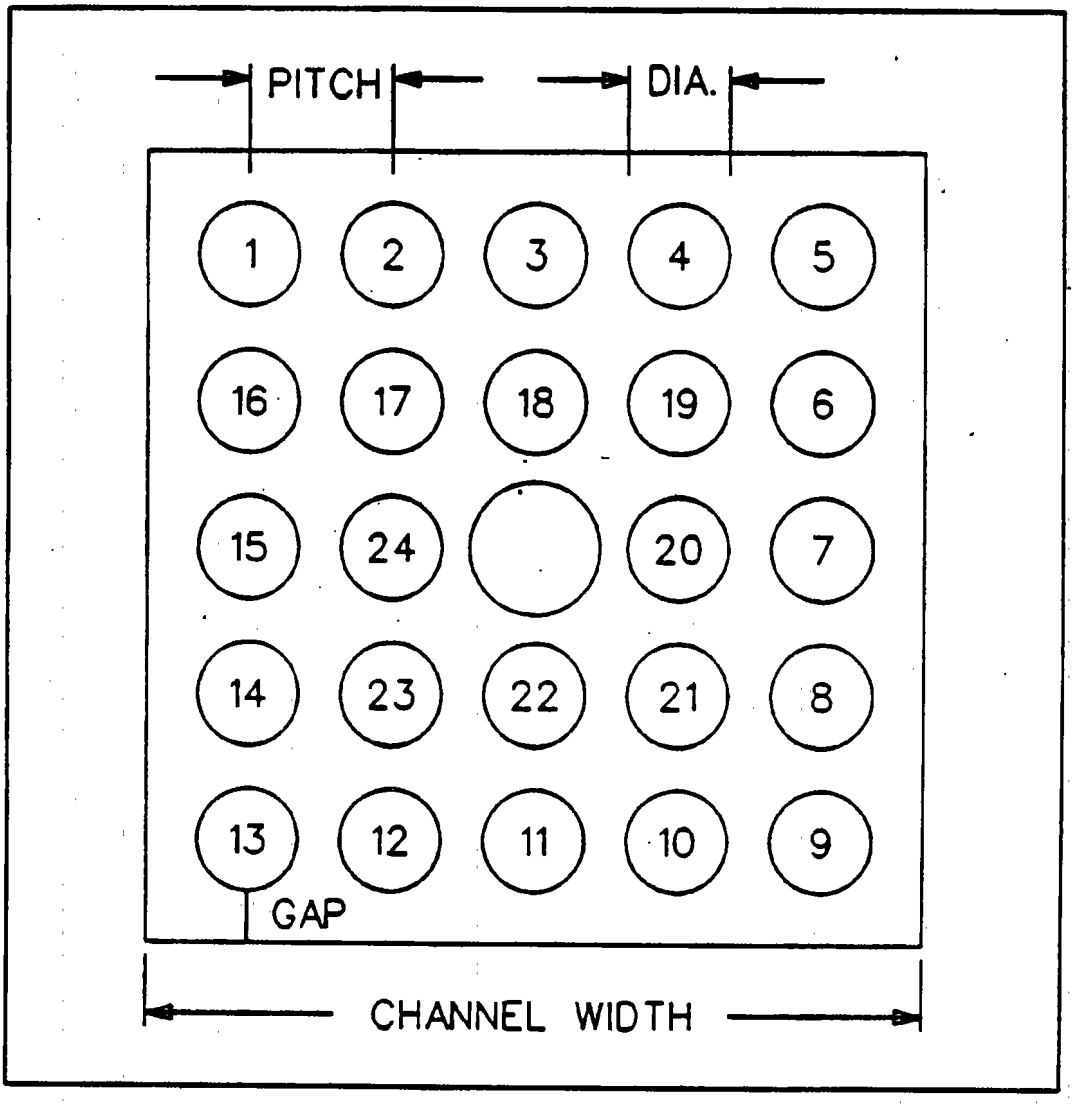

FIGURE 3.1 CROSS SECTION OF TEST BUNDLE AND ROD NUMBER SYSTEM FOR TESTS

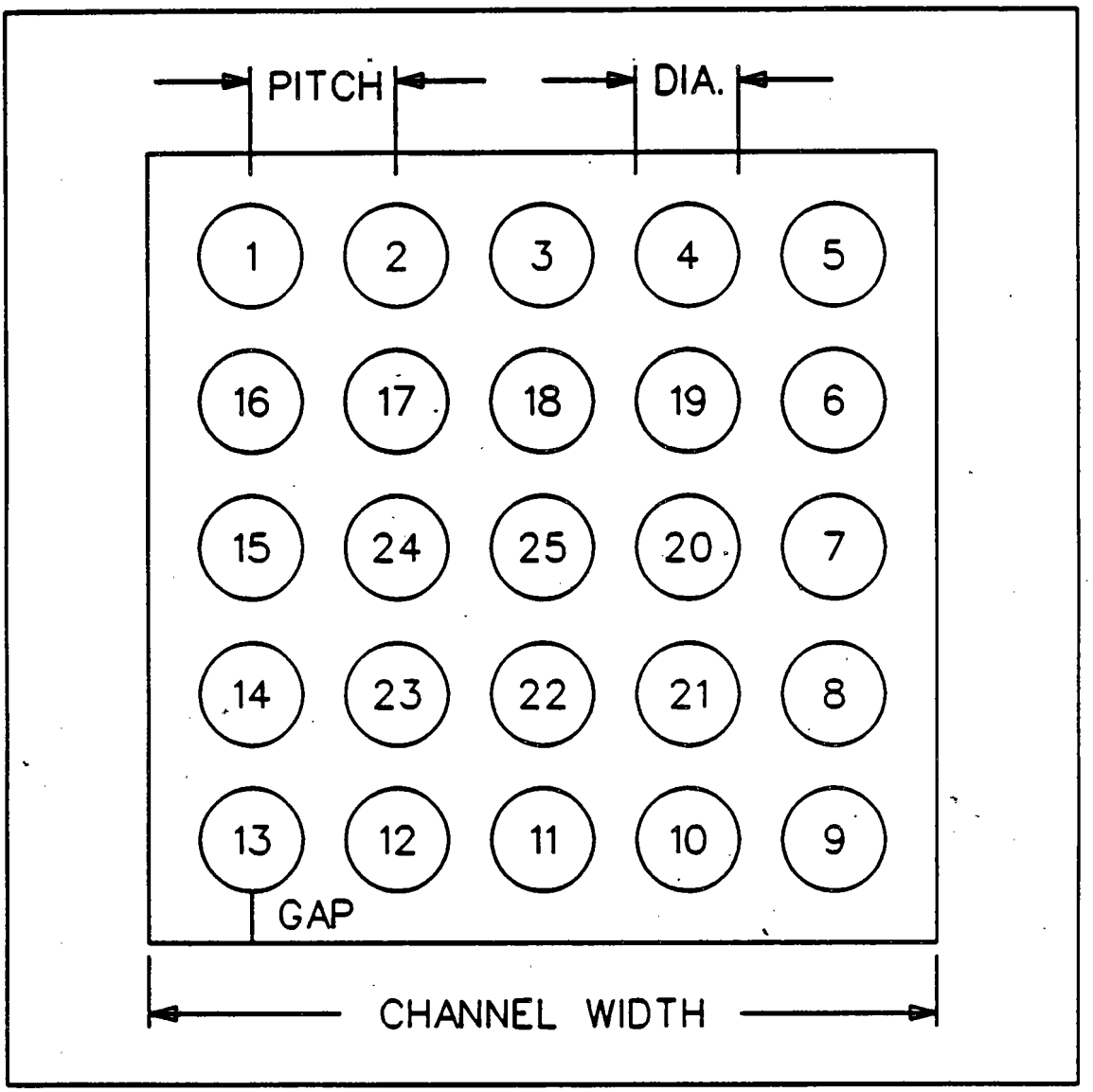

FIGURE 3.2 CROSS SECTION OF TEST BUNDLE AND ROD NUMBER SYSTEM FOR TEST

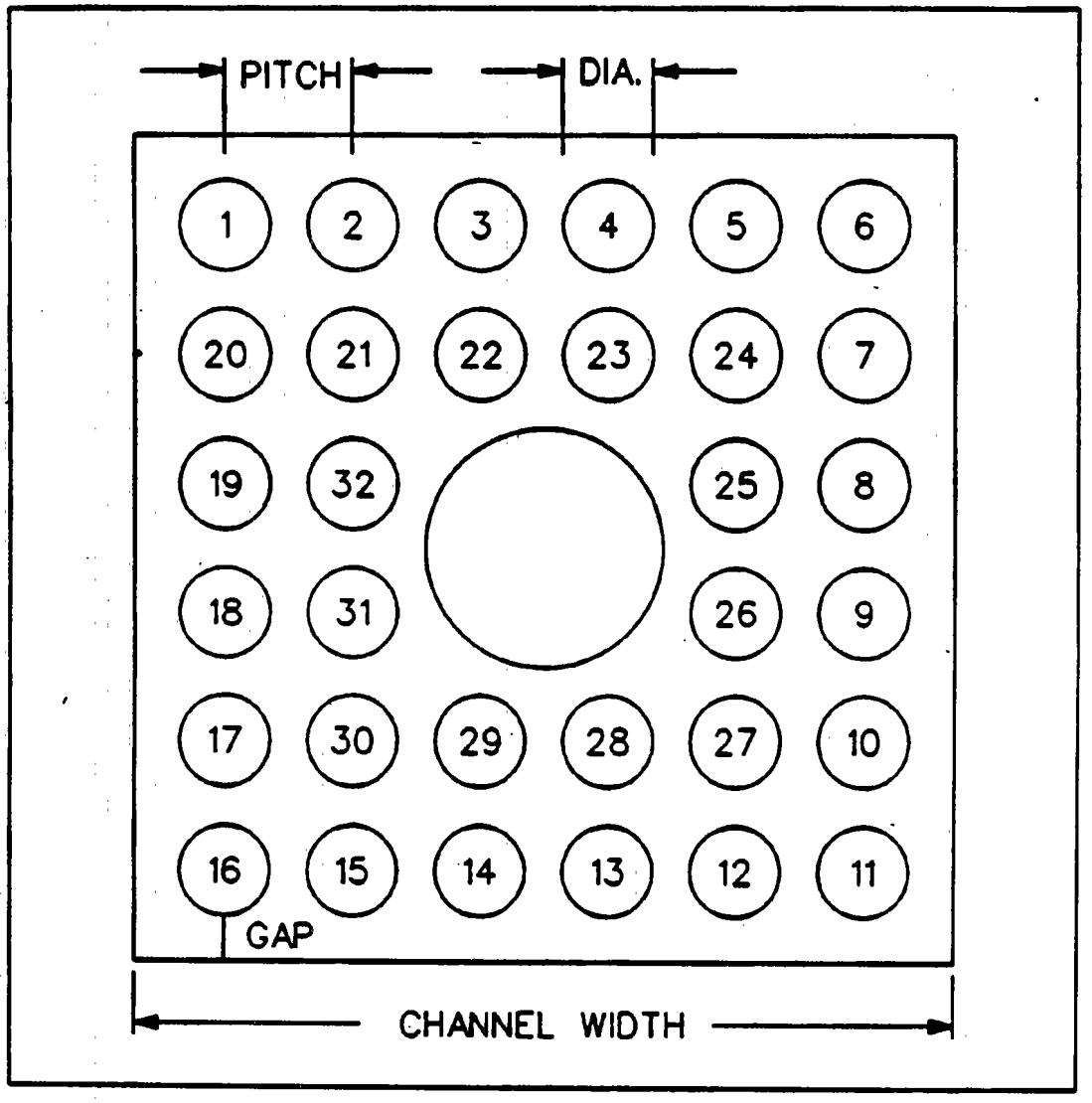

FIGURE 3.3 CROSS SECTION OF TEST BUNDLE AND ROD NUMBER SYSTEM FOR

FIGURE 3.4 DNB HEAT FLUX SHOWN AS FUNCTION OF TEST ASSEMBLY FOR ALL TESTS

FIGURE 3.5 DNB HEAT FLUX SHOWN AS FUNCTION OF FOR ALL TESTS

FIGURE 3.6 DNB HEAT FLUX SHOWN AS FUNCTION OF FOR ALL TESTS

FIGURE 3.7 DNB HEAT FLUX SHOWN AS FUNCTION OF FOR ALL TESTS

Pages 170 through 185 deleted

4.0 STATISTICAL CHARACTERIZATION OF THE HTP DNB CORRELATION

The HTP DNB correlation safety limit is derived using the ratio of the DNB heat flux to the DNB heat flux The correlation safety limit is the value of the ratio which, with 95% confidence, 95% of the population of P/M values fall. The correlation safety limit is derived using the same that was used for the correlation. criterion is applied to identify outliers.

To evaluate the safety limit, the data sample is sorted in descending order of ratio. defines the degree of confidence, g, associated with the fractional probability, P, that values chosen This degree of confidence, g, is defined in terms of

With 95% confidence, at least 95% of the population of ratios will be than this value.

5.0 REFERENCES

1) XN-NF-621(P)(A), Revision 1, "Exxon Nuclear DNB Correlation for PWR Fuel Designs", Exxon Nuclear Co., September, 1983

2) Gambill, W. R., and Bundy, R. D., "An Evaluation of the Present Status of Swirl-Flow Heat Transfer," ASME Paper 62-HT-42.

3)

4) Tong, L.S., "Boiling Crisis and Critical Heat Flux", U.S. Atomic Energy Commission Office of Information Services, 1972.

5) Lahey, R.T, "The Thermal Hydraulics of A Boiling Water Nuclear Reactor", The American Nuclear Society, La Grange Park, Ill., 1977

6)

7)

8) ANF-1224(P)(A), and Supplement 1, "Departure from Nucleate Boiling Correlation for High Thermal Performance Fuel", April 1990.

9)

SUPPLEMENT 1

CORRESPONDENCE

SIEMENS

August 20, 1993
RAC:93:131

Mr. R. C. Jones, Chief
Reactor Systems Branch
Division of Engineering and System Technology
Office of Nuclear Reactor Regulation
Mail Station P1-137
U. S. Nuclear Regulatory Commission
Washington, D.C. 20555

Dear Mr. Jones:

Response to NRC Questions on EMF-92-153(P)

Reference: Letter, R. C. Jones (USNRC) to R. A. Copeland (SPC), "Request for Additional Information for Siemens Topical Report, EMF-92-153(P) (TAC NO. M84646)," August 5, 1993.

Attached are the responses to your request for more information on Siemens Power Corporation's topical report, EMF-92-153(P), "HTP: Departure from Nucleate Boiling Correlation for High Thermal Performance Fuel." These questions were transmitted in the referenced letter.

Siemens Power Corporation considers the information contained in these responses to be proprietary. The affidavit supplied with the original submittal of the topical report is intended to satisfy the requirements of 2.790(b) for the withholding of these responses from public disclosure.

If you have any questions, or if additional information is needed, please contact me at (509) 375-8290.

Very truly yours,

Bob Copeland

R. A. Copeland, Manager
Product Licensing

Attachment

cc: Dr. T. L. Huang, USNRC
Dr. H. Komoriya, ITS
Mr. L. E. Phillips, USNRC

bcc: F. T. Adams
R. E. Collingham
R. C. Gottula
L. E. Hansen
J. S. Holm
T. H. Keheley
L. D. O'Dell
F. B. Skogen
File

Siemens Power Corporation

Nuclear Division - Engineering and Manufacturing Facility

2101 Horn Rapids Road, PO Box 130 Richland, WA 99352-0130 Tel: (509) 375-8100 Fax: (509) 375-8402

Question 1: test sections simulated a uniform axial power profile while had a cosine shape and had a skewed shape.

a) Since these data would not support a determination for a non-symmetric shape, explain that a uniform power shape is applicable to the actual or expected power shape in the fuel.

b) Justify, using statistical analysis, the use of this correlation for all of the relevant fuel lengths and power shapes.

c) Explain how the coefficients and the constant in the Equation for F_{nz} are determined.

d) Explain why P/M comparison for tests 52, 53, and 59 show poor agreement.

Response:

a) A fundamental assumption underlying all major DNB correlations is that the DNB heat flux may be predicted from local coolant conditions. It follows that the DNB heat flux is (to the first order) independent of axial heat flux profile effects. The maximum correction for non-uniform axial power distribution (NUAPD) effects in the HTP correlation is well within the correlation's 95/95 tolerance limit for fitting and measurement accuracy. The small size of the NUAPD correction tends to confirm the validity of the local conditions assumption. The use of uniform axial power distributions in the HTP DNB correlation data base is considered appropriate, since the key local conditions dependencies may be captured equally well with uniform or non-uniform axial profiles. In this light, the axial power distributions considered in the HTP correlation data base are adequate to establish the NUAPD effects.

axial power distributions are included in the HTP data base. The data base supporting the BWC correlation contains three axial power distributions. The CE-1 correlation is based upon four axial power distributions. The data base for the WRB-1 correlation includes five axial power distributions. The number of axial power distributions contained in the HTP data base is thus typical of the industry.

Over the years, the PWR fuel vendors have collected large amounts of DNB data characterizing various NUAPDs for different fuel designs. Most of this data is available in the public domain. From this data, it has been recognized that the NUAPD effect is fully separable from fuel design parameter effects, such as hydraulic diameter, spacer pitch, and assembly heated length. This has been demonstrated by the universally successful application of integral NUAPD factor formulations that are independent of fuel design parameters to large bodies of NUAPD data. (Some examples are the Westinghouse W-3, WRB-1 and WRB-2 correlations, the CE-1 correlation, the BWC correlation, the XNB correlation, and the EPRI correlation). The HTP correlation experimental design was

developed in the light of this knowledge, and does not therefore place undue emphasis on the NUAPD effects.

b) Statistics describing the HTP correlation performance on the various heated lengths in the data base are listed in Table 1(b)a. For each heated length, the average of the P/M ratios for the test sections having that heated length is given. Also given for each heated length is the difference between that average value and the overall mean P/M ratio for all of the data in the data base. The deviation is at most At best, the allowance for test repeatability and measurement accuracy is The deviations listed in Table 1(b)a are therefore within test accuracy. There is no significant variation in the HTP accuracy between the different heated lengths included in the data base.

Table 1(b)a: Accuracy of HTP Predictions By Heated Length

The number of heated lengths included in the HTP correlation is compared in Table 1(b)b with that of other accepted DNB correlations. Also included in the Table is the ratio of the number of heated lengths represented in the data base to the number of heated lengths to which the correlations are applied. This statistic indicates the relative density of the correlation data bases in regard to the heated length parameter. The HTP correlation is well supported in regard to the heated length parameter when compared to other approved DNB correlations for application to fuel designs between 8 and 14 feet in heated length.

Table 1(b)b: Heated Length Statistics for Various DNB Correlations

DNB Correlation	Number of Heated Lengths in the Data Base (NHLDB)	NHLDB/Number of Heated Lengths to Which Applied
WRB-1	2	0.7
CE-1	1	1
BWC	1	1

Justification for the separation of fuel design parameter effects from the NUAPD effect in the experimental design is provided in the response to Question 1a, above.

c) The development of the F_{ax} coefficients is described in the following. A correlation is developed based on the available uniform axial shape data (see response to Question 4). The non-uniform axial shapes are predicted using this correlation. The required adjustments for NUAPD effects are correlated in terms of the FPBZ parameter defined on page 17 of the topical report. An additional constraint is found in the requirement that the NUAPD factor go to a value of one for the uniform axial shape.

The result is a NUAPD factor that effectively correlates the HTP data, and that behaves in a reasonable and conservative manner for all NUAPDs. The value of F_{ax} lies across the range of possible FPBZ values. The factor provides a maximum credit of

For additional information, please see the response to Question 1a.

d) The key statistics for the HTP correlation predictions of Tests are given in Table 1(d)a. The mean values listed in Table 1(d)a indicate that for these test sections, the DNB heat flux predicted by the HTP correlation is on average less than the measured values. The HTP predictions for the fuel designs represented by Tests are therefore conservative.

The difference between predicted and measured values for these tests is slightly larger than for other tests in the HTP data base. The accuracy is acceptable for a DNB correlation applicable to more than one fuel design. Perfect fits of all test sections are typically not achieved in practice. The standard deviations for Tests are well within expectation. The accuracy of the HTP correlation in predicting the Test data is actually quite good, in that the mean P/M value for that test is within 1% of the overall correlation mean P/M. Tests and are underpredicted in the mean by amounts that are also well within expectation for a DNB correlation.

To provide a basis for comparison, the key statistics for the 5 most conservatively biased test sections included in the WRB-1 data base are listed in Table 1(d)b. It may be seen that the HTP predictions for the three tests of concern lie within the range of the WRB-1 predictions, confirming the adequacy of the HTP correlation fit of Tests

Table 1(d)b Key Statistics For Selected WRB-1 Test Sections

Test Section	Mean P/M Ratio	Standard Deviation
A	0.931	0.07
B	0.945	0.08
C	0.952	0.10
D	0.956	0.08
E	0.977	0.07

Question 2: Since DNB analysis is often performed using axial power factors greater than was used with the cosine power shapes.

Response: The HTP data base contains cosine axial power profiles, This range represents a significant variation in the value of the cosine axial peaking factor. The range includes the DNB-limiting axial profiles typically encountered in practice. While higher axial peaking factors may occur at significantly reduced power levels, the reduction in power that accompanies the increase in peaking renders these cases non-limiting with respect to DNB. The range of axial peaking factors included in the HTP data base is thus considered sufficient.

The correlation predicts the DNB performance of the cosine axial power profiles with acceptable accuracy. This confirms the adequacy of the correlation to handle cosine axial peaking effects. No direct dependence on the axial peaking factor manifested in the correlating process, so the correlation does not contain a direct dependence on the axial peaking factor. This is typical of other SPC DNB correlations and of the correlations of utilities and other vendors. The magnitude of the axial peaking factor has thus been found in the present development and historically across the industry to be a negligible effect.

There are experimental limitations on the value of axial peaking factor that may be achieved in test. Axial power distributions are accomplished by thinning the heater rod

wall in the axial region where higher peaking is desired. Due to structural integrity considerations, the rod wall can be thinned only down to about 15 mils. The range of axial peaking factors included in the HTP data base are close to these design limits.

The cosine axial peaking factors included in the HTP data base are similar to those included in the data base of the WRB-1, CE-1, and BWC correlations developed by Westinghouse, Combustion Engineering, and Babcock & Wilcox, respectively. The cosine axial peaking factors utilized in these four DNB correlations are listed in Table 2. The maximum HTP value exceeds that of the CE-1 correlation, and is within 5% of the WRB-1 values. The differences are not significant. The BWC correlation has a somewhat larger factor. The cosine axial peaking factors represented in the HTP data base are consistent with industry standard practice.

Table 2 Cosine Axial Peaking Factors

DNB Correlation	Cosine Axial Peaking Factors Represented in the Data Base
WRB-1	1.5, 1.55
CE-1	1.45
BWC	1.66

Question 3: All test sections with the non-12' heated lengths are 5x5 and do not include 6x6. Similarly only one test section of all sections having 12' heated lengths is configured 6x6. Discuss the statistical significance and applicability of a correlation developed based upon this data sample to various fuel bundle configurations.

Response: The HTP correlation data base employs chiefly the industry standard 5x5 test array. The approved XCOBRA-IIIC subchannel code provides an adequate accounting for the flow and enthalpy distribution effects of array size, and permits the 5x5 test results to be applied to full arrays in core. The data base would be adequate if it contained no 6x6 arrays. There is thus no statistical significance to SPC's having used one 6x6 test array in the HTP correlation data base.

One 6x6 array is included in the HTP data base. The HTP correlation provides an accurate fit of this 6x6 DNB data. This fit is achieved without use of an array size effect parameter in the correlation. Had a significant array size effect been present, the HTP correlation would have to contain an array size effect in order to fit the data. Since there is no array size effect in HTP, there is no observable array size effect in the data.

DNB test array sizes have increased over the years to the present industry standard 5x5. In earlier years, 3x3 and 4x4 arrays were used. The power demands of DNB testing, which may approach 10 MWe, preclude the use of too large an array. The 5x5 array size keeps the power demand to an achievable level.

All vendors rely heavily on the 5x5 array. In Table 3, array sizes represented in the data bases of the HTP, WRB-1, CE-1, and BWC correlations are listed. CE have used only 5x5 arrays. All but one B&W test sections utilized a 5x5 array. The Westinghouse data base includes a large number of both 4x4 and 5x5 arrays, along with a single 3x3 array. The array size is not a significant effect in the correlation of DNB data.

Table 3 Comparison of Test Array Sizes for Various DNB Correlations

Correlation	Test Section Array Sizes
HTP	6x6 (1), 5x5
BWC	3x3 (1), 5x5
CE-1	5x5
WRB-1	3x3 (1), 4x4, 5x5

Question 4: The equation for FDF on page 15 has two variables based upon heated length of assembly, LEN and LEN2. On page 16, Siemens defined these variables. Explain how their coefficients (b13 and b14) and other fuel design factors were determined. Do these two coefficients require re-determination when the heated length is less

Response: Development of the fuel design factor is described in the following. A correlation (reference correlation) is developed for one reference test section of data. The reference correlation establishes the fundamental fluid conditions dependencies. A second test section of data which differs from the reference section in only one fuel design parameter is predicted via the reference correlation. This result establishes the effect of the varied fuel design parameter on DNB for the reference geometry, from which a factor modifying the reference correlation may be defined. Additional separate effects test sections are added one at a time to the reference correlation in this manner, until a preliminary (uniform axial) correlation is defined. From this exercise, a knowledge of the magnitude of the different fuel design parameter effects is obtained, along with information about how the individual fuel design parameters interact. The resulting correlation will be termed the exploratory correlation in the remainder of this response.

A correlation form reflecting this information is proposed, and fitted to the entire uniform axial data set via regression. The resulting correlation is then reviewed on an overall and individual test basis for predictive capability in the mean, for acceptably small standard

deviation, for acceptably small dependence of residuals on the correlating variables, and for whether the resulting correlation provides a reasonable magnitude for the various fuel design parameter effects when compared to the exploratory correlation. This process is repeated until a satisfactory correlation of the uniform axial data base is obtained. Non-uniform axial effects are handled as discussed in the responses to Question 1.

The length effect implemented via the LEN and LEN2 parameters is limited to that characterizing the range between For heated lengths below the value at is used. Since a reduction in heated length generally produces an improvement in DNB performance, this is a conservative approach. The Test data heated length) was successfully predicted using this approach. SPC does not anticipate applying the HTP correlation to any reactors having a heated length greater than (Contrary to Table 1.2 of the HTP topical report, the lower limit on the application consistent with the limits of the data base).

Question 5: Explain and justify the meaning of negative local quality on Figure 3.5.

Response: The thermodynamic quality, χ, is defined:

$$\chi = [h_{loc} - h_{sat}]/h_{fg}$$

where h_{loc} is the subchannel cross-sectional average enthalpy, h_{sat} is the liquid saturation enthalpy, and h_{fg} is the latent heat of vaporization. χ is defined for values of h_{loc} greater than h_{sat} or less than h_{sat}, and may take values either greater or less than zero. χ values less than zero correspond to the subcooled void regime, in which coolant at the rod surface is two-phase, but the coolant on average across the subchannel is subcooled. For values of χ greater than zero, the coolant on average across the subchannel is two-phase. Some DNB data do occur in the subcooled void regime.

Question 6: Define and justify the applicable range of physical conditions for the HTP correlation.

Response: The ranges of conditions within which the HTP correlation is to be used are listed in Tables 1.1 and 1.2 of the HTP topical report. These ranges are the ranges of the variables represented in the HTP correlation data base. The correlation is not applied outside these limits. The XCOBRA-IIIC code in which the HTP correlation is implemented prints warning messages should a particular application calculation result in conditions which exceed these limits, to alert the analyst to the problem.

The lower limit on assembly heated length listed in Table 1.2 of the HTP topical report is incorrect. The correct lower limit is corresponding to the limits of HTP data base. SPC intends to apply the HTP correlation as described in Section 2 of the report for fuel designs between

Question 7: Of the tests reported, two show that the least square line is higher than the ideal line. In the remainder of the tests, for those tests where there is a relatively large difference between these two lines, the least square line is below. Explain in depth the significance of the ideal vs. fitted lines within the band and discuss the conservative nature of the fit. Further, discuss the origin of the limit lines and its significance on fitted data.

Response: The ideal line represents the ideal case in which the predicted DNB heat flux is equal to that measured. The fitted line is a least-squares fit of the DNB heat flux (predicted by HTP) as a function of the measured DNB heat flux. If the HTP correlation provided a perfect fit for all test sections, the ideal line and the least-squares fit would be identical. For the practical case where a perfect fit is not obtained, the difference between ideal and fitted lines indicates how closely the HTP fit approximates the ideal fit for each test section.

The line represents the one-sided upper 95/95 tolerance limit for the distribution of ratios of predicted DNB heat flux to measured DNB heat flux. At a 95% confidence level, there is a 95% probability that the predicted DNB heat flux is times the measured DNB heat flux. The line simply provides a symmetric bound on the lower side of ideal. The lines are included to permit a visual evaluation of how good the HTP fit is relative to the 95/95 allowance for measurement and fitting error that characterizes the correlation.

Tests show insignificant deviations from ideal, and require no further discussion. Tests show varying degrees of bias in the fit, but the bias lies well within the 95/95 limit for nearly all the data in these tests.

Question 8: Compare the performance of the HTP correlation against that of the ANFP correlation and demonstrate that the predictions by the use of the HTP correlation are as or more conservative than those obtained with the ANFP correlation over the range of applicability of ANFP. Further, compare the performance of the HTP correlation for the HTP designs of the ABB-CE fuels with that predicted by the comparable ABB-CE DNB correlation.

Response: The comparative performance of the HTP and ANFP correlations on the data sets common to both is given in Table 8 below. The predictive capability of the correlations is essentially the same, with minor variations on particular data sets confined within the limits of measurement and typical fitting accuracy. The 95/95 limits established for the two correlations are similar in value, a bit above The 95/95 limits are upper one-sided tolerance limits that are set to encompass the effects of measurement and fitting accuracy. Use of the 95/95 limit as a minimum in practice ensures that the correlation is applied conservatively, with the proper accounting for measurement and fitting accuracy.

The HTP correlation is not uniformly more conservative than the ANFP correlation. Some tests are predicted to have slightly greater DNB heat flux with ANFP than with HTP. For other tests, the HTP correlation may give slightly greater DNB heat fluxes.

Within the limits of measurement and fitting accuracy, the correlations acceptably reproduce their respective data bases. It was expected in the development of the HTP correlation that it would produce results that are similar those of the ANFP correlation, as is demonstrated in Table 8.

SPC does not have access to the ABB-CE DNB correlation, and so cannot provide the requested comparison.

Table 8 Comparison of Key Statistics for Test Sections Common to HTP and ANFP

Question 9: Demonstrate the applicability of the used with XCOBRA-IIIC to the wider range of fuel design parameters which constitute the correlation data base.

Response: DNB correlations typically include fuel design parameter terms. These terms include the spacer pitch and/or the distance from the next upstream mixing grid, the heated length of the assembly, and the hydraulic diameter. Correlations representing more than one type of mixing grid design may describe this effect by using different values of the turbulent mixing parameter to represent each different mixing design. The HTP correlation is applicable only to the HTP fuel design, and thus requires only one value of the turbulent mixing coefficient. Correlating in terms of these fuel design parameters captures the effects of fuel design parameters on turbulent mixing as it affects DNB performance. The effects of turbulent mixing on the DNB performance are implicitly included in the fuel design parameter dependencies of the DNB correlation. An explicit, accurate formulation of the turbulent mixing parameter is thus not required for the accurate correlation of the DNB performance. The is thus equally applicable to all HTP fuel designs represented in the HTP correlation data base.

EMF-92-153(NP)(A)

EMF-92-153(NP)(A)
Supplement 1

Issue Date: 3/8/94

HTP: DEPARTURE FROM NUCLEATE BOILING CORRELATION FOR HIGH THERMAL PERFORMANCE FUEL

Distribution

Document Control (5)
USNRC/RA Copeland (15)

Framatome ANP, Inc.

Appendix A

Extension of the HTP CHF Correlation Ranges

D. A. Farnsworth

R. L. Harne

May 2004

A.1 Introduction and Summary

This Appendix represents Revision 1 to the original version of the topical report EMF-92-153(P)(A) (Reference 1). The purpose of this revision is to extend the range of applicability of the correlation in terms of its independent variables. The need to extend the range of applicability of the independent variables exists because conditions are generated in plant specific analyses which are outside of the original range.

The HTP CHF correlation is based on [ ]* data from [ ] separate CHF tests at the Columbia University Heat Transfer Research Facility (HTRF). These tests were conducted in the late 1980s to early 1990s time frame. The HTRF was officially closed by the university on December 31, 2003.

The HTP CHF correlation is [ ]. This type of correlation is termed a [ ] correlation. Its major independent variables, in addition to quality, are system pressure and local mass velocity. The CHF calculated from these local thermal hydraulic conditions is modified by a [ ]. All of these terms are applied multiplicatively as shown in Section 2 of the main body of this report.

Other examples of [ ] correlations are the Westinghouse W-3 correlation (Reference 5) and the Framatome ANP BWC and BWCMV correlations, References 6 and 7, respectively. This type of correlation is generally limited to relatively low qualities at CHF (well below 40%), mass velocities above 0.8 Mlb/hr-sq ft and pressures above about 1400 psia. The specific ranges of the HTP correlation, as approved in Reference 1, are shown in Table A.1. These are the ranges over which the HTP correlation was optimized (correlated).

* Note: The original issue of EMF-92-153(P)(A), Reference 1, documented [ ] data. A letter was supplied to the NRC, in Reference 8, that explained minor changes in the HTP data base.

Table A.1 Approved Range of Independent Variables for the HTP CHF Correlation

Independent Variable	Minimum Value	Maximum Value
System Pressure, psia	1775	2425
Mass Velocity, Mlbm/hr-ft^2	0.936	3.573
Thermodynamic Quality at CHF	-0.125	0.358

The revised range of applicability of the HTP correlation justified in this Appendix is shown in Table A.2 below. The changes in the range of applicability are:

1. A reduction in the lower pressure limit, lower mass velocity limit, and lower quality limit, and
2. An increase in the upper pressure limit and upper quality limit.

Table A.2 Revised Range of Independent Variables for the HTP CHF Correlation

Independent Variable	Minimum Value	Maximum Value
Pressure, psia	1385	2540
Mass Velocity, Mlbm/hr-ft^2	0.498	3.573
Thermodynamic Quality at CHF	No Lower Limit*	0.515

* because of increasingly conservative trend of lower quality extrapolation

The previously approved range of inlet enthalpy and the fuel design parameters from Tables 1.1 and 1.2, respectively, of Reference 1 will remain applicable.

A.2 Methods of Extending the Independent Variable Ranges

There are three methods to extend the range of applicability of the HTP correlation:

Method 1: Obtain CHF data in the extended ranges and reoptimize the correlation. For this method the new broader limits are automatically based on the range of the enlarged data base.

Method 2: Obtain CHF data in the extended ranges and apply the original correlation without reoptimization. If the additional (uncorrelated) data is correctly predicted by the original correlation or is conservative with respect to the CHF predicted by the original correlation, the new limits are verified.

Method 3: The original correlation can be simply applied in the extended ranges. Here, of course, sufficient demonstrations of the suitability and/or conservatism of the extrapolations are necessary.

The use of Method 1 would require reanalysis of current plant specific results and thus will not be used. Method 2 will be used to extend the lower pressure limit, the lower mass velocity limit and the upper quality limit. Method 3 will be used to extend the lower quality limit and the upper pressure limit with multiple justifications of the suitability and conservatism of this approach.

The justification for the extension of the range of applicability of the HTP correlation independent variables is presented in two parts:

Part 1 – Extension of the Ranges Using Data with Method 2, and

Part 2 – Extension of the Ranges by Extrapolation with Method 3.

A.3 Part 1 – Extension of the Ranges Using Data with Method 2

A.3.1 *Data Base for Justification*

A significant amount of HTP CHF data were obtained at the Columbia HTRF beyond the approved applicability ranges defined in Table A.1. These additional CHF data were not utilized in the establishment of the HTP CHF correlation. The additional data were obtained in [ ] of the [ ] tests and consisted of [ ] data overall. The additional data are in pressure groups of 1400, 1000 and 600 psia, mass velocities down to 0.25 Mlb/hr-ft^2 and thermodynamic qualities at CHF of up to 58 percent.

These [ ] tests covered the range of physical fuel design parameters in the correlation as defined in Table 1.2 of the body of the report (Reference 1). The data at 600 and 1000 psia were obtained in only 5 of the tests and did not cover a sufficiently wide range of fuel design parameters. Thus, only the 1400 psia data will be used to justify the extension to lower pressure, lower mass velocity and higher quality [ ].

In addition, there were only two of the 1400 psia data at low mass velocities (0.25 Mlb/hr-ft^2) and one point at high quality (at 58 percent). These three data were removed from the 1400 psia group of data leaving [ ] data with which to justify the extensions. This [ ] data base will be referred to as the "New" or "Uncorrelated" data while the original [ ] data base will be referred to as the "Original" or "Correlated" data.

The test conditions (experimental) for the New data are contained in Table A.8. Table A.99 contains the resulting local conditions and P/M CHF values resulting from the application of the original HTP CHF correlation with the XCOBRA-IIIC thermal-hydraulic analysis code (Reference 2).

A.3.2 *Extension of the Upper Quality Limit*

The New data range in thermodynamic quality from –0.019 to 0.515. The Original and New data are plotted against quality (using the original HTP CHF correlation) in Figures A.1 and A.2, respectively. Both data sets are combined and shown in Figure A.3. The New data is generally conservative with respect to the Original data, P/M values below 1.0 are conservative in that the Measured (M) CHF obtained in the test are greater than the value Predicted (P) by the HTP correlation. The New data is about 10 percent conservative overall with an average P/M of 0.8922 versus the Original average P/M of 0.9938.

The upper limit in thermodynamic quality at CHF can be extended to 0.515 (51.5 percent) based on these data and analysis with the original HTP correlation,.

A.3.3 *Extension of the Lower Mass Velocity Limit*

The New data range in mass velocity from 0.498 to 3.542 Mlb/hr-ft^2. The Original and New data are plotted against mass velocity (using the original HTP CHF correlation) in Figures A.4 and A.5. The data sets are combined and shown in Figure A.6. The New data is generally conservative with respect to the Original data as shown in Figures A.5 and A.6.

The data below one million lb/hr-ft^2 is the most important data for the extension of the lower mass velocity limit. In this subgroup of [ ] data the mean P/M is 0.979 (2.1 percent conservative) with [ ] data having a P/M less than 1.0. The combined scatterplot (Figure A.6) shows good performance about the 1.0 line with no slope (bias). The conservative trend of the New data is most evident in the medium mass velocity range (1.0 to 2.0 Mlb/hr-ft^2).

The lower limit in mass velocity can be extended to 0.498 Mlb/hr-ft^2 based on these data and analysis with the original HTP correlation.

A.3.4 *Extension of the Lower Pressure Limit*

The New data is comprised of the 1400 psia data group (1385 to 1430 psia). The 1400 psia data is conservative by about 10 percent overall with the vast majority of P/M values below a value of 1.0 ([ ]). The conservatism of the data is shown in Figure A.7.

The lower limit in pressure can be extended to 1385 psia based on these data and analysis with the original HTP correlation,

A.3.5 *Effect of Different Geometries on the Extended Data*

The extension of the HTP correlation was examined to verify that the extension of the HTP correlation is conservative for each approved assembly geometry. The examination was performed for each test section since each tests section represents a single geometry.

The Average P/M CHF values are shown for each test section in Figure A.8. The test section averages for the original data are represented by the open bars. The shaded bars (which overlay the open bars) represent the average of the extended data only.

Note that there is extended data for [ ] tests: only tests 62, 63 and 66 through 68 lacked extended data. Further note that in each test section that had extended data, the average of the extended data is conservative with respect to the original data (the extended data P/M is lower than the original data P/M in all cases).

This comparison indicates that in no case does the differing geometry produce a non-conservative trend when the HTP correlation is applied to the extended data. Therefore, it is concluded that the entire set of the [ ] extended data can be used to conservatively extend the range of independent variables of the HTP correlation.

**Figure A.1 P/M CHF versus Thermodynamic Quality at CHF
Original HTP Data Base with HTP Correlation**

Figure A.2 P/M CHF versus Thermodynamic Quality at CHF New (Uncorrelated) HTP Data with HTP Correlation

Figure A.3 P/M CHF versus Thermodynamic Quality at CHF Original and New (Uncorrelated) HTP Data with HTP Correlation

Range of Independent Variables for the HTP CHF Correlation with the Extension of the Upper Quality Limit

	As Approved		Extended	
Independent Variable	Minimum Value	Maximum Value	Minimum Value	Maximum Value
System Pressure, psia	1775	2425	1775	2425
Mass Velocity, Mlbm/hr-ft^2	0.936	3.573	0.936	3.573
Thermodynamic Quality at CHF	-0.125	0.358	-0.125	**0.515**

**Figure A.4 P/M CHF versus Local Mass Velocity
Original HTP Data Base with HTP Correlation**

**Figure A.5 P/M CHF versus Local Mass Velocity
New (Uncorrelated) HTP Data with HTP Correlation**

Figure A.6 P/M CHF versus Local Mass Velocity
Original and New (Uncorrelated) HTP Data with HTP Correlation

Range of Independent Variables for the HTP CHF Correlation with the Extension the Upper Quality and Lower Mass Velocity Limits

	As Approved		Extended	
Independent Variable	Minimum Value	Maximum Value	Minimum Value	Maximum Value
System Pressure, psia	1775	2425	1775	2425
Mass Velocity, Mlbm/hr-ft^2	0.936	3.573	**0.498**	3.573
Thermodynamic Quality at CHF	-0.125	0.358	-0.125	**0.515**

Figure A.7 P/M CHF versus System Pressure
Original and New (Uncorrelated) HTP Data with HTP Correlation

Range of Independent Variables for the HTP CHF Correlation with the Extension of the Upper Quality and Lower Mass Velocity and Pressure Limits

	As Approved		Extended	
Independent Variable	Minimum Value	Maximum Value	Minimum Value	Maximum Value
System Pressure, psia	1775	2425	**1385**	2425
Mass Velocity, Mlbm/hr-ft^2	0.936	3.573	**0.498**	3.573
Thermodynamic Quality at CHF	-0.125	0.358	-0.125	**0.515**

Figure A.8 Histogram of Test Section P/M CHF Averages For the Original HTP Data Base and for the New Data

A.4 Part 2 – Extension of the Ranges by Extrapolation with Method 3

A.4.1 *The Question of Extrapolation*

The justification of the extension of a correlation's independent variable range using new or previously uncorrelated data is relatively straightforward. Part 1 of this appendix demonstrates that such an extension is valid if the predicted CHF under the new conditions is accurate or conservative as long as the safety limit remains valid (or is changed to preserve the original margin).

The correlation must be extrapolated, rather than extended, when no data exists in the range where it is desired to use the correlation. Three questions will be considered as part of the justification of extrapolating the correlation:

A.4.2 *Trends When Extrapolating the HTP CHF Correlation (Technique 1)*

[ ]

A.4.2.1 Q_{CHF} Versus Pressure in Parameters of Quality

[ ]

A.4.2.2 Q_{CHF} Versus Mass Velocity in Parameters of Quality

[ ]

A.4.2.3 Q_{CHF} Versus Pressure in Parameters of Mass Velocity (Low Quality)

[ ]

A.4.2.4 Q_{CHF} Versus Pressure in Parameters of Mass Velocity (High Quality)

[ ]

[ ]

A.4.2.5 Results of the "Trend" Investigations

[ ]

Figure A.9 CHF Versus System Pressure Parameters of Quality at Constant Mass Velocity

Figure A.10 CHF Versus Mass Velocity Parameters of Quality at Constant Pressure

Figure A.11 CHF Versus System Pressure
Parameters of Mass Velocity at Constant Low Quality

Figure A.12 CHF Versus System Pressure Parameters of Mass Velocity at Constant High Quality

A.4.3 *Re-correlation and Extrapolation of Subsets of the Original Data (Technique 2)*

A.4.3.1 Direction of Extrapolation (Quality)

[ ]

A.4.3.2 Length of Extrapolation (Pressure)

[ ]

Figure A.13 P/M CHF Versus Thermodynamic Quality at CHF Study Showing Negative Extrapolation (High to Low)

Figure A.14 P/M CHF Versus Thermodynamic Quality at CHF Study Showing Positive Extrapolation (Low to High)

Figure A.15 P/M CHF Versus Thermodynamic Quality at CHF Study Showing Negative and Positive Extrapolation

Figure A.16 P/M CHF Versus System Pressure
Extrapolation of 50 and 150 Percent of Correlated Range

A.4.4 *Extrapolation to Lower Qualities and Higher Pressure*

A.4.4.1 Justification of Extrapolation to Lower Quality

[ ]

A.4.4.2 Justification of Extrapolation to Higher Pressure

[ ]

[ ]

Figure A.17 P/M CHF Versus Thermodynamic Quality at CHF Original HTP Data Base With HTP-HIGH Correlation

Figure A.18 P/M CHF Versus Thermodynamic Quality at CHF Original HTP Data Base With HTP-HIGH Correlation

Figure A.19 P/M CHF Versus Thermodynamic Quality at CHF
Original HTP Data Base With HTP-HIGH Correlation

Figure A.20 P/M CHF Versus System Pressure
Original HTP Data Base With HTP-LOW Correlation

Figure A.21 P/M CHF Versus System Pressure
Mark B and Mark C Non-Mixing Grid Data With BWU Correlation

A.4.5 *Consequences of Extrapolation (Technique 3)*

A.5 Summary

In Section A.2 the objectives of this topical addendum were stated to be:

1. Extend the lower pressure limit, the lower mass velocity limit and the upper quality limit using "new" (previously uncorrelated) data from the HTP data base.

2. Extend the lower quality limit and the upper pressure limit using a conservative extrapolation method (providing multiple justifications of the suitability and conservatism of this approach).

The following three tables show the progression in achieving these objectives.

Table A.3 Range of Independent Variables for the HTP CHF Correlation as Approved With Original Data

Independent Variable	Minimum Value	Maximum Value
Pressure, psia	1775	2425
Mass Velocity, Mlbm/hr-ft^2	0.936	3.573
Thermodynamic Quality at CHF	-0.125	0.358

Table A.4 Range of Independent Variables for the HTP CHF Correlation With New (Uncorrelated) Data

Independent Variable	Minimum Value	Maximum Value
Pressure, psia	**1385**	2425
Mass Velocity, Mlbm/hr-ft^2	**0.498**	3.573
Thermodynamic Quality at CHF	-0.125	**0.515**

Table A.5 Range of Independent Variables for the HTP CHF Correlation With Extrapolated Low Quality and High Pressure

Independent Variable	Minimum Value	Maximum Value
Pressure, psia	1775	**2540**
Mass Velocity, Mlbm/hr-ft^2	0.936	3.573
Thermodynamic Quality at CHF	**No Lower Limit***	0.358

* because of increasingly conservative trend of lower quality extrapolation

A.6 Conclusion

It has been shown here through both the application of new (uncorrelated) data and conservative extrapolation techniques that the HTP correlation can be extended to the following ranges and statistical parameters. The previously approved range of inlet enthalpy and the fuel design parameters from Tables 1.1 and 1.2, respectively, of Reference 1 will remain applicable.

Table A.6 Range of Independent Variables for the HTP CHF Correlation

Independent Variable	Minimum Value	Maximum Value
Pressure, psia	1385	2540
Mass Velocity, Mlbm/hr-ft^2	0.498	3.573
Thermodynamic Quality at CHF	No Lower Limit*	0.515

* because of increasingly conservative trend of lower quality extrapolation

Table A.7 Statistical Parameters for the HTP CHF Correlation

A.7 References

1. EMF-92-153(P)(A), *HTP: Departure From Nucleate Boiling Correlation for High Thermal Performance Fuel*, March 1994.

2. EMF-CC-093(P) Revision 5, *XCOBRA-IIIC Theory and User's Manual*, April 2004.

3. Norman R. Draper and Harry Smith, Applied Regression Analysis, John Wiley & Sons, Third Edition, 1998.

4. BAW-10199PA, *The BWU CHF Correlations*, D. A. Farnsworth and G. A. Meyer, December 1999.

5. L. S. Tong, "Prediction of Departure from Nucleate Boiling for an Axially Non-Uniform Heat Flux Distribution," Journal of Nuclear Energy, Volume 21, 1967, pp.241-248.

6. BAW-10143P-A, *BWC Correlation of Critical Heat Flux*, R. H. Wilson, D. A. Farnsworth, and R. H. Stoudt, April 1985.

7. BAW-10159P-A, *Correlation of Critical Heat Flux in Mixing Vane Grid Fuel Assemblies*, D. A. Farnsworth and G. A. Meyer, July 1990.

8. Letter, J. Mallay (Framatome ANP) to the NRC Document Control Desk, "Topical Report EMF-92-153(P)(A) and Supplement 1, *HTP: Departure from Nucleate Boiling Correlation for High Thermal Performance Fuel*", NRC:03:010, January 28, 2003.

Table A.8 Additional HTP Data – Bundle Conditions

Following are the bundle conditions (test conditions) of the [ ] additional data. These data are used for justification of the extension of the independent variables beyond the applicability ranges defined by the original HTP data base in Reference 1.

Units:

ID : XXYYY where XX is the test section number and YYY is the run number
P : Pressure, psia
Tin : Inlet Temperature, F
G : Mass Velocity, Mlb/hr-ft^2
Q" : Average Heat Flux, MBtu/hr-ft^2

Table A.9 Additional HTP Data – Local Conditions and HTP Results

Following are the results of applying the original HTP CHF correlation to the [ ] additional data. These data are used for the justification of the extension of the independent variables beyond the applicability ranges defined by the original HTP data base in Reference 1.

Units:

ID - XXYYY where XX is the test section number and YYY is the run number
P/M CHF : Predicted to Measured CHF Ratio
CHF : Measured CHF, Btu/hr-ft^2
P : Pressure, psia
G : Mass Velocity, lb/hr-ft^2
Zchf : Location of CHF, inches
F Fact : Non-uniform AFS factor
Hin : Inlet Enthalpy, Btu/lb