WOLF CREEK
NUCLEAR OPERATING CORPORATION

Richard A. Muench
President and Chief Executive Officer

March 25, 2005

WM 05-0013

U. S. Nuclear Regulatory Commission
ATTN: Document Control Desk
Washington, DC 20555

Subject: Docket No. 50-482: 10 CFR 50.55a Requests Regarding Implementation of ASME Section XI Requirements for Examination of the Reactor Pressure Vessel and Connecting Loop Piping Welds; 10 CFR 50.55a Requests I2R-29, I2R-30, I2R-31, and I2R-32

Gentlemen:

Pursuant to 10 CFR 50.55a(a)(3)(i), Wolf Creek Nuclear Operating Corporation (WCNOC) hereby requests NRC approval for use of alternatives to the requirements of the American Society of Mechanical Engineers (ASME) Boiler and Pressure Vessel (BPV) Code, Section XI requirements for examination of the reactor pressure vessel (RPV) and connecting loop piping welds for the second 10-year interval of WCNOC's Inservice Inspection (ISI) Program.

Attachment I provides 10 CFR 50.55a Request I2R-29 to the WCNOC Second Interval ISI Program Plan. It requests an alternative from the qualification requirements of ASME Section XI Appendix VIII, Supplement 10 for supporting examination of dissimilar metal piping welds (i.e., for RPV piping welds examined from the inside surface of the RPV). The proposed alternative would allow use of alternative requirements that have been developed by the industry (to be implemented through the Performance Demonstration Initiative (PDI) program) and which are contained in a proposed revision to Supplement 10. A summary of the proposed revision to Supplement 10 is included as Enclosure I to support request I2R-29.

Attachment II provides 10 CFR 50.55a Request I2R-30 to the WCNOC Second Interval ISI Program Plan. It requests an alternative from the qualification requirements of Supplements 2 and 10 of ASME Section XI Appendix VIII to permit use of the industry's PDI program for implementation of the applicable qualification requirements associated

A047

with the examination of Class 1 pressure-retaining piping (safe-end) welds from the inside surface. The alternate program proposed by the industry as Supplement 14 to Appendix VIII would be used for this purpose.

Attachment III provides 10 CFR 50.55a Request I2R-31 to the WCNOC Second Interval ISI Program Plan. It would allow use of a PDI-qualified procedure to complete the ultrasonic examination of the RPV shell-to-flange weld from the vessel inside diameter surface in accordance with Appendix VIII Supplements 4 and 6 in lieu of ASME Section V, Article 4 (as directed by ASME Section XI, 1989 Edition, Subsection IWA-2232 and Appendix I, Subparagraph I-2110).

Attachment IV provides 10 CFR 50.55a Request I2R-32 to the WCNOC Second Interval ISI Program Plan. It requests use of the alternative examination volume requirements shown in Figure 1 of Code Case N-613-1 for examination of the RPV nozzle to vessel welds in lieu of the requirements of ASME Section XI, Figure IWB-2500-7(a).

NRC Safety Evaluation dated April 7, 2004, to the AmerenUE Callaway Plant, approved the alternatives for which WCNOC is seeking approval in the attached 10 CFR 50.55a Requests I2R-29, I2R-30 and I2R-31 listed above.

NRC Safety Evaluation dated October 7, 2004, to Duke Energy Corporation, approved the alternative for which WCNOC is seeking approval in the attached 10 CFR 50.55a Request I2R-32 listed above, for Catawba Unit 2.

The Second ISI Interval ends on September 2, 2005. WCNOC will complete the subject examinations addressed by the attached 10 CFR 50.55a Requests for the Second ISI Interval during RF14, which is scheduled for completion in May 2005.

WCNOC requests approval of these 10 CFR 50.55a Requests by August 12, 2005.

If you have any questions concerning this matter, please contact me at (620) 364-4000 or Mr. Kevin Moles at (620) 364-4126.

Sincerely,

Richard A. Muench

RAM/rlg

Attachment I: 10 CFR 50.55a Request I2R-29
Attachment II: 10 CFR 50.55a Request I2R-30
Attachment III: 10 CFR 50.55a Request I2R-31
Attachment IV: 10 CFR 50.55a Request I2R-32
Enclosure I: 10 CFR 50.55a Request I2R-29 - Proposed Revision to ASME Section XI Appendix VIII, Supplement 10

cc: J. N. Donohew (NRC), w/a, w/e
D. N. Graves (NRC), w/a, w/e
B. S. Mallett (NRC), w/a, w/e
Senior Resident Inspector (NRC), w/a, w/e

10 CFR 50.55a Request Number I2R-29

Proposed Alternative
In Accordance with 10 CFR 50.55a(a)(3)(i)
--Alternative Provides Acceptable Level of Quality and Safety--

1. ASME Code Component(s) Affected

Class 1 Pressure Retaining Piping Welds examined from the inside surface of Pressurized Water Reactors using procedures, personnel, and equipment qualified to ASME Section XI, Appendix VIII, Supplement 10 criteria.

SAFE-END WELDS CODE CATEGORY B-F

Code Item	Description	Weld No.
B5.10	Safe-end to Loop A RPV Inlet Nozzle	RV-302-121-A (Note 1)
B5.10	Safe-end to Loop A RPV Outlet Nozzle	RV-301-121-A (Note 1)
B5.10	Safe-end to Loop B RPV Inlet Nozzle	RV-302-121-B (Note 2)
B5.10	Safe-end to Loop B RPV Outlet Nozzle	RV-301-121-B (Note 2)
B5.10	Safe-end to Loop C RPV Inlet Nozzle	RV-302-121-C (Note 2)
B5.10	Safe-end to Loop C RPV Outlet Nozzle	RV-301-121-C (Note 2)
B5.10	Safe-end to Loop D RPV Inlet Nozzle	RV-302-121-D (Note 1)
B5.10	Safe-end to Loop D RPV Outlet Nozzle	RV-301-121-D (Note 2)

Note 1: These welds are selected for examination by the WCNOC Risk-Informed ISI Program.

Note 2: Due to V. C. Summer hot leg nozzle cracking, it was decided that all inlet and outlet dissimilar metal nozzle-to-safe-end Cat. B-F welds are to be examined during Refuel 14 (Spring 2005).

2. Applicable Code Edition and Addenda

Wolf Creek Generating Station is in its second inservice inspection interval, which started on September 3, 1995 and ends on September 2, 2005. The applicable Code edition and addenda is ASME Section XI, "Rules for Inservice Inspection of Nuclear Power Plant Components," 1989 Edition, with no Addenda. In addition, as required by 10 CFR 50.55a, ASME Section XI, 1995 Edition through 1996 Addenda is used for Appendix VIII, Performance Demonstration for Ultrasonic Examination Systems.

3. Applicable Code Requirement

The following paragraphs or statements are from ASME Section XI, Appendix VIII, Supplement 10 and identify the specific requirements that are addressed in this request for relief.

10 CFR 50.55a Request Number I2R-29

Item 1 - Paragraph 1.1(b) states in part - Pipe diameters within a range of 0.9 to 1.5 times a nominal diameter shall be considered equivalent.

Item 2 - Paragraph 1.1(d) states - All flaws in the specimen set shall be cracks.

Item 3 - Paragraph 1.1(d)(1) states - At least 50% of the cracks shall be in austenitic material. At least 50% of the cracks in austenitic material shall be contained wholly in weld or buttering material. At least 10% of the cracks shall be in ferritic material. The remainder of the cracks may be in either austenitic or ferritic material.

Item 4 - Paragraph 1.2(b) states in part - The number of unflawed grading units shall be at least twice the number of flawed grading units.

Item 5 - Paragraph 1.2(c)(1) and 1.3(c) state in part - At least 1/3 of the flaws, rounded to the next higher whole number, shall have depths between 10% and 30% of the nominal pipe wall thickness. Paragraph 1.4(b) distribution table requires 20% of the flaws to have depths between 10% and 30%.

Item 6 - Paragraph 2.0 first sentence states - The specimen inside surface and identification shall be concealed from the candidate.

Item 7 - Paragraph 2.2(b) states in part - The regions containing a flaw to be sized shall be identified to the candidate.

Item 8 - Paragraph 2.2(c) states in part - For a separate length sizing test, the regions of each specimen containing a flaw to be sized shall be identified to the candidate.

Item 9 - Paragraph 2.3(a) states - For the depth sizing test, 80% of the flaws shall be sized at a specific location on the surface of the specimen identified to the candidate.

Item 10 - Paragraph 2.3(b) states - For the remaining flaws, the regions of each specimen containing a flaw to be sized shall be identified to the candidate. The candidate shall determine the maximum depth of the flaw in each region.

Item 11 - Table VIII-S2-1 provides the false-call criteria when the number of unflawed grading units is at least twice the number of flawed grading units.

4. Reason for Request

Relief is requested to use the following alternative requirements for implementation of the above Appendix VIII, Supplement 10 requirements. The alternative requirements will be implemented through the Performance Demonstration Initiative (PDI) Program.

It is important to note that the industry developed a proposed revision to Supplement 10, which included the alternatives identified below, along with additional clarifications and enhancements. A copy of that proposed revision is enclosed. The proposed alternatives are highlighted in the enclosure where they may be viewed in context. ASME revised Supplement 10 in the 2004 Edition of Section XI to incorporate the proposed industry revision.

10 CFR 50.55a Request Number I2R-29

5. Proposed Alternative and Basis for Use

The following alternatives are proposed, wherein a proposed alternative is specified for each Appendix VIII item listed in Section 3 above.

Item 1 - The proposed alternative to Paragraph 1.1(b) states:

"The specimen set shall include the minimum and maximum pipe diameters and thicknesses for which the examination procedure is applicable. Pipe diameters within **1/2 in. (13 mm) of the** nominal diameter shall be considered equivalent. Pipe diameters larger than 24 in. (610 mm) shall be considered to be flat. When a range of thicknesses is to be examined, a thickness tolerance of ±25% is acceptable."

Technical Basis - The change in the minimum pipe diameter tolerance from 0.9 times the diameter to within 1/2 inch of the nominal diameter provides tolerances more in line with industry practice. Though the alternative is less stringent for small pipe diameters they typically have a thinner wall thickness than larger diameter piping. A thinner wall thickness results in shorter sound path distances that reduce the detrimental effects of the curvature. This change maintains consistency between Supplement 10 and the recent revision to Supplement 2.

Item 2 - The proposed alternative to Paragraph 1.1(d) states:

"At least 60% of the flaws shall be cracks, the remainder shall be alternative flaws. Specimens with IGSCC shall be used when available. Alternative flaws, shall meet the following requirements:
(1) Alternative flaws, if used, shall provide crack-like reflective characteristics and shall only be used when implantation of cracks would produce spurious reflectors that are uncharacteristic of service-induced flaws.
(2) Alternative flaw mechanisms shall have a tip width no more than 0.002 in. (.05 mm)."

Note, to avoid confusion the proposed alternative modifies instances of the term "cracks" or "cracking" to the term "flaws" because of the use of alternative flaw mechanisms."

Technical Basis - As illustrated below, implanting a crack requires excavation of the base material on at least one side of the flaw. While this may be satisfactory for ferritic materials, it does not produce a useable axial flaw in austenitic materials because the sound beam, which normally passes only through base material, must now travel through weld material on at least one side, producing an unrealistic flaw response. In addition, it is important to preserve the dendritic structure present in field welds that would otherwise be destroyed by the implantation process. To resolve these issues, the proposed alternative allows the use of up to 40% fabricated flaws as an alternative flaw mechanism under controlled conditions. The fabricated flaws are isostatically compressed which produces ultrasonic reflective characteristics similar to tight cracks.

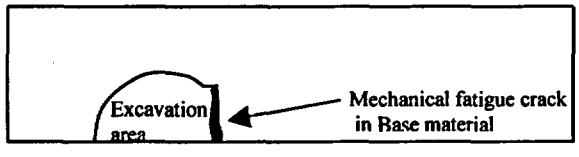

10 CFR 50.55a Request Number I2R-29

Item 3 - The proposed alternative to Paragraph 1.1(d)(1) states:

"At least **80%** of the **flaws** shall be contained wholly in weld or buttering material. At least **one and no more than** 10% of the **flaws** shall be in ferritic **base** material. **At least one and no more than 10% of the flaws shall be in austenitic base material."**

Technical Basis - Under the current Code, as little as 25% of the flaws may be contained in austenitic weld or buttering material. Recent experience has indicated that flaws are most likely to be contained within the weld. The metallurgical structure of austenitic weld material is ultrasonically more challenging than either ferritic or austenitic base material. The proposed alternative is therefore more challenging than the current Code.

Item 4 - The proposed alternative to Paragraph 1.2(b) states:

"**Personnel performance demonstration** detection **test** sets shall be selected from Table VIII-S10-1. The number of unflawed grading units shall be at least 1-1/2 times the number of flawed grading units."

Technical Basis – Proposed Table VIII-S10-1 provides a statistically based ratio between the number of unflawed grading units and the number of flawed grading units. The proposed alternative reduces the ratio to 1.5, thus reducing the number of test samples to a more reasonable number from the human factors perspective. However, the statistical basis used for screening personnel and procedures is still maintained at the same level with regard to competent personnel being successful and less skilled personnel being unsuccessful. The acceptance criteria for the statistical basis are in Table VIII-S10-1.

Item 5 - The proposed alternative to the flaw distribution requirements of Paragraph 1.2(c)(1) (detection) and 1.3(c) (length) is to use the Paragraph 1.4(b) (depth) distribution table (see below) for all qualifications.

Flaw Depth (% Wall Thickness)	Minimum Number of Flaws
10-30%	20%
31-60%	20%
61-100%	20%

Technical Basis - The proposed alternative uses the depth sizing distribution for both detection and depth sizing because it provides for a better distribution of flaw sizes within the test set. This distribution allows candidates to perform detection, length, and depth sizing demonstrations simultaneously utilizing the same test set. The requirement that at least 75% of the flaws shall be in the range of 10 to 60% of wall thickness provides an overall distribution tolerance yet the distribution uncertainty decreases the possibilities for testmanship that would be inherent to a uniform distribution. It must be noted that it is possible to achieve the same distribution utilizing the present requirements, but it is preferable to make the criteria consistent.

10 CFR 50.55a Request Number I2R-29

Item 6 - The proposed alternative to Paragraph 2.0 first sentence states:

"For qualifications from the outside surface, the specimen inside surface and identification shall be concealed from the candidate. When qualifications are performed from the inside surface, the flaw location and specimen identification shall be obscured to maintain a 'blind test.'"

Technical Basis - The current Code requires that the inside surface be concealed from the candidate. This makes qualifications conducted from the inside of the pipe (e.g., PWR nozzle to safe end welds) impractical. The proposed alternative differentiates between ID and OD scanning surfaces, requires that they be conducted separately, and requires that flaws be concealed from the candidate. This is consistent with the recent revision to Supplement 2.

Items 7 and 8 - The proposed alternatives to Paragraph 2.2(b) and 2.2(c) state:

"... containing a flaw to be sized **may** be identified to the candidate."

Technical Basis - The current Code requires that the regions of each specimen containing a flaw to be length sized shall be identified to the candidate. The candidate shall determine the length of the flaw in each region. (Note that length and depth sizing use the term "regions," while detection uses the term "grading units." The two terms define different concepts and are not intended to be equal or interchangeable.) To ensure security of the samples, the proposed alternative modifies the first "shall" to a "may" to allow the test administrator the option of not identifying specifically where a flaw is located. This is consistent with the recent revision to Supplement 2.

Items 9 and 10 - The proposed alternative to Paragraph 2.3(a) and 2.3(b) state:

"... regions of each specimen containing a flaw to be sized **may** be identified to the candidate."

Technical Basis - The current Code requires that a large number of flaws be sized at a specific location. The proposed alternative changes the "shall" to a "may" which modifies this from a specific area to a more generalized region to ensure security of samples. This is consistent with the recent revision to Supplement 2. It also incorporates terminology from length sizing for additional clarity.

Item 11 - The proposed alternative modifies the acceptance criteria of Table VIII-S2-1 as follows:

10 CFR 50.55a Request Number I2R-29

TABLE VIII-S~~2~~10-1
PERFORMANCE DEMONSTRATION DETECTION TEST ACCEPTANCE CRITERIA

Detection Test Acceptance Critera		False Call Test Acceptance Criteria	
No. of Flawed Grading Units	Minimum Detection Criteria	No. of Unflawed Grading Units	Maximum Number of False Calls
~~5~~	~~5~~	~~10~~	~~0~~
~~6~~	~~6~~	~~12~~	~~1~~
~~7~~	~~6~~	~~14~~	~~1~~
~~8~~	~~7~~	~~16~~	~~2~~
~~9~~	~~7~~	~~18~~	~~2~~
10	8	~~20~~ 15	~~3~~ 2
11	9	~~22~~ 17	~~3~~ 3
12	9	~~24~~ 18	~~3~~ 3
13	10	~~26~~ 20	~~4~~ 3
14	10	~~28~~ 21	~~5~~ 3
15	11	~~30~~ 23	~~5~~ 3
16	12	~~32~~ 24	~~6~~ 4
17	12	~~34~~ 26	~~6~~ 4
18	13	~~36~~ 27	~~7~~ 4
19	13	~~38~~ 29	~~7~~ 4
20	14	~~40~~ 30	~~8~~ 5

Technical Basis - The proposed alternative is identified as new Table S10-1 above. It was modified to reflect the reduced number of unflawed grading units and allowable false calls. As a part of ongoing Code activities, Pacific Northwest National Laboratories (PNNL) has reviewed the statistical significance of these revisions and offered the revised Table S10-1.

Alternative Examination

In lieu of the requirements of ASME Section XI, 1995 Edition through 1996 Addenda, Appendix VIII, Supplement 10, the proposed alternative shall be used. The proposed alternative is described in the enclosure. All other ASME Section XI Code requirements for which relief is not specifically requested remain applicable, including third party review by the Authorized Nuclear Inservice Inspector. Pursuant to 10 CFR 50.55a(a)(3)(i), approval is requested to use the proposed alternatives described above in lieu of the ASME Section XI, Appendix VIII, Supplement 10 requirements. Compliance with the proposed alternatives will provide an adequate level of quality and safety for examination of the affected welds.

10 CFR 50.55a Request Number I2R-29

6. Duration of Proposed Alternative

The proposed alternative is requested for the duration of the second inservice inspection interval.

7. Precedents

The NRC has granted similar relief to Callaway Plant [Reference AmerenUE Callaway Plant letter, dated August 14, 2003, Docket No. 50-483, "Requests for Relief Regarding Implementation of ASME Section XI Appendix VIII Requirements", and the associated NRC Safety Evaluation, letter from Stephen Dembek to Garry Randolph (Union Electric Company) dated April 7, 2004; Subject: Callaway Plant Unit 1 – Relief Request ISI-27 through ISI-31 Pertaining to Implementation of ASME Section XI Appendix VIII Requirements (TAC Nos. MC04478 through MC04482, respectively)].

10 CFR 50.55a Request I2R-29
Proposed Revision to ASME Section XI Appendix VIII, Supplement 10

SUPPLEMENT 10 – QUALIFICATION REQUIREMENTS FOR DISSIMILAR METAL PIPING WELDS		
Current Requirement	**Proposed Change**	**Reasoning**
	1.0 SCOPE	
	Supplement 10 is applicable to dissimilar metal piping welds examined from either the inside or outside surface. Supplement 10 is not applicable to piping welds containing supplemental corrosion resistant clad (CRC) applied to mitigate Intergranular Stress Corrosion Cracking (IGSCC).	A scope statement provides added clarity regarding the applicable range of each individual Supplement. The exclusion of CRC provides consistency between Supplement 10 and the recent revision to Supplement 2 (Reference BC 00-755). Note, an additional change identifying CRC as "in course of preparation" is being processed separately.
1.0 SPECIMEN REQUIREMENTS	**2.0 SPECIMEN REQUIREMENTS**	Renumbered.
Qualification test specimens shall meet the requirements listed herein, unless a set of specimens is designed to accommodate specific limitations stated in the scope of the examination procedure (e.g., pipe size, weld joint configuration, access limitations). The same specimens may be used to demonstrate both detection and sizing qualification.	Qualification test specimens shall meet the requirements listed herein, unless a set of specimens is designed to accommodate specific limitations stated in the scope of the examination procedure (e.g., pipe size, weld joint configuration, access limitations). The same specimens may be used to demonstrate both detection and sizing qualification.	No Change.
1.1 General. The specimen set shall conform to the following requirements.	**2.1 General.** The specimen set shall conform to the following requirements.	Renumbered.
	(a) The minimum number of flaws in a specimen set shall be ten.	New. Changed minimum number of flaws to 10 so sample set size for detection is consistent with length and depth sizing.
(a) Specimens shall have sufficient volume to minimize spurious reflections that may interfere with the interpretation process.	(b) Specimens shall have sufficient volume to minimize spurious reflections that may interfere with the interpretation process.	Renumbered.
(b) The specimen set shall include the minimum and maximum pipe diameters and thicknesses for which the examination procedure is applicable. Pipe diameters within a range of 0.9 to 1.5 times a nominal diameter shall be considered equivalent.	(c) The specimen set shall include the minimum and maximum pipe diameters and thicknesses for which the examination procedure is applicable. Pipe diameters within **1/2 in. (13 mm) of the** nominal diameter shall be considered equivalent. Pipe	Renumbered and metrified. The change in pipe diameter tolerance provides consistency between Supplement 10 and the recent revision to Supplement 2 (Reference BC 00-755).

10 CFR 50.55a Request I2R-29
Proposed Revision to ASME Section XI Appendix VIII, Supplement 10

SUPPLEMENT 10 – QUALIFICATION REQUIREMENTS FOR DISSIMILAR METAL PIPING WELDS		
Current Requirement	**Proposed Change**	**Reasoning**
Pipe diameters larger than 24 in. shall be considered to be flat. When a range of thicknesses is to be examined, a thickness tolerance of ±25% is acceptable.	diameters larger than 24 in. **(610 mm)** shall be considered to be flat. When a range of thicknesses is to be examined, a thickness tolerance of ±25% is acceptable.	
(c) The specimen set shall include examples of the following fabrication condition:	**(d)** The specimen set shall include examples of the following fabrication conditions:	Renumbered, and changed "condition" to "conditions."
(1) geometric conditions that normally require discrimination from flaws (e.g., counterbore or weld root conditions, cladding, weld buttering, remnants of previous welds, adjacent welds in close proximity);	(1) geometric **and material** conditions that normally require discrimination from flaws (e.g., counterbore or weld root conditions, cladding, weld buttering, remnants of previous welds, adjacent welds in close proximity, **weld repair areas**);	Clarified, since some of the items listed relate to material conditions rather than geometric conditions. Weld repair areas were added as a result of recent field experiences.
(2) typical limited scanning surface conditions (e.g., diametrical shrink, single-side access due to nozzle and safe end external tapers).	(2) typical limited scanning surface conditions shall be included as follows: (a) for outside surface examination, **weld crowns,** diametrical shrink, single-side access due to nozzle and safe end external tapers **(b) for inside surface examination, internal tapers, exposed weld roots, and cladding conditions for inside surface examinations).** **(e) Qualification requirements shall be satisfied separately for outside surface and inside surface examinations.**	Differentiates between ID and OD scanning surface limitations. Requires that ID and OD qualifications be conducted independently. [Note: new paragraph 2.0 (identical to old paragraph 1.0) provides for alternatives when "a set of specimens is designed to accommodate specific limitations stated in the scope of the examination procedure."].
(d) All flaws in the specimen set shall be cracks.		Deleted this requirement, because new paragraph 2.3 below provides for the use of "alternative flaws" in lieu of cracks.
(1) At least 50% of the cracks shall be in austenitic material. At least 50% of the cracks in austenitic material shall be contained wholly in weld or buttering material. At least 10% of the cracks shall be in ferritic material. The remainder of the cracks may be in either austenitic or ferritic material.	**2.2 Flaw Location.** At least **80%** of the flaws shall be contained wholly in weld or buttering material. At least **one and no more than** 10% of the **flaws** shall be in ferritic **base** material. **At least one and no more than 10% of the flaws shall be in austenitic base material.**	Renumbered and re-titled. Flaw location percentages redistributed because field experience indicates that flaws contained in weld or buttering material are probable and represent the more stringent ultrasonic detection scenario.

10 CFR 50.55a Request I2R-29
Proposed Revision to ASME Section XI Appendix VIII, Supplement 10

SUPPLEMENT 10 – QUALIFICATION REQUIREMENTS FOR DISSIMILAR METAL PIPING WELDS		
Current Requirement	**Proposed Change**	**Reasoning**
(2) At least 50% of the cracks in austenitic base material shall be either IGSCC or thermal fatigue cracks. At least 50% of the cracks in ferritic material shall be mechanically or thermally induced fatigue cracks.	**2.3 Flaw Type.** **(a) At least 60% of the flaws shall be cracks, and the remainder shall be alternative flaws. Specimens with IGSCC shall be used when available. Alternative flaws shall meet the following requirements:** **(1) Alternative flaws, if used, shall provide crack-like reflective characteristics and shall only be used when implantation of cracks would produce spurious reflectors that are uncharacteristic of service-induced flaws.** **(2) Alternative flaws shall have a tip width no more than 0.002 in. (.05 mm).**	Renumbered and re-titled. Alternative flaws are required for placing axial flaws in the HAZ of the weld and other areas where implantation of a crack produces metallurgical conditions that result in an unrealistic ultrasonic response. This is consistent with the recent revision to Supplement 2 (Reference BC 00-755). The 40% limit on alternative flaws is needed to support the requirement for up to 70% axial flaws. Metrified.
(3) At least 50% of the cracks shall be coincident with areas described in (c) above.	**(b)** At least 50% of the **flaws** shall be coincident with areas described in **2.1(d)** above.	Renumbered. Due to inclusion of "alternative flaws," use of "cracks" is no longer appropriate.
	2.4 Flaw Depth. All flaw depths shall be greater than 10% of the nominal pipe wall thickness. Flaw depths shall exceed the nominal clad thickness when placed in cladding. **Flaws in the sample set shall be distributed as follows:** Flaw Depth (% Wall Thickness) / Minimum Number of Flaws **10-30% — 20%** **31-60% — 20%** **61-100% — 20%** **At least 75% of the flaws shall be in the range of 10 to 60% of wall thickness.**	Created new paragraph 2.4 which consists of requirements removed from old paragraph 1.3(c) and 1.4, and re-titled. Flaw depths table from 1.4 used for consistency between detection (old paragraph 1.3 (c)) and sizing specimen set (old paragraph 1.4 (b)) requirements.

10 CFR 50.55a Request I2R-29
Proposed Revision to ASME Section XI Appendix VIII, Supplement 10

SUPPLEMENT 10 – QUALIFICATION REQUIREMENTS FOR DISSIMILAR METAL PIPING WELDS		
Current Requirement	**Proposed Change**	**Reasoning**
1.2 Detection Specimens. The specimen set shall include detection specimens that meet the following requirements.		Renumbered, re-titled, and moved to paragraph 3.1(a). No other changes.
(a) Specimens shall be divided into grading units. Each grading unit shall include at least 3 in. of weld length. If a grading unit is designed to be unflawed, at least 1 in. of unflawed material shall exist on either side of the grading unit. The segment of weld length used in one grading unit shall not be used in another grading unit. Grading units need not be uniformly spaced around the pipe specimen.		Renumbered to paragraph 3.1(a)(1). No other changes.
(b) Detection sets shall be selected from Table VIII-S2-1. The number of unflawed grading units shall be at least twice the number of flawed grading units.		Moved to new paragraph 3.1(a)(2).
(c) Flawed grading units shall meet the following criteria for flaw depth, orientation, and type.		Flaw depth requirements moved to new paragraph 2.4. Flaw orientation requirements moved to new paragraph 2.5. Flaw type requirements moved to new paragraph 2.3, "Flaw Type."
(1) All flaw depths shall be greater than 10% of the nominal pipe wall thickness. At least 1/3 of the flaws, rounded to the next higher whole number, shall have depths between 10% and 30% of the nominal pipe wall thickness. However, flaw depths shall exceed the nominal clad thickness when placed in cladding. At least 1/3 of the flaws, rounded to the next whole number, shall have depths greater than 30% of the nominal pipe wall thickness.		Deleted. For consistency in sample sets the depth distribution is the same for detection and sizing.
(2) At least 30% and no more than 70% of the flaws, rounded to the next higher whole number, shall be oriented axially. The remainder of the flaws shall be oriented circumferentially.	**2.5 Flaw Orientation.** (a) For other than sizing specimens at least 30% and no more than 70% of the flaws, rounded to the next higher whole number, shall be oriented axially. The	Note that this distribution is applicable for detection and depth sizing. Paragraph 2.5(b)(1) requires that all length- sizing flaws be oriented circumferentially.

10 CFR 50.55a Request I2R-29
Proposed Revision to ASME Section XI Appendix VIII, Supplement 10

SUPPLEMENT 10 – QUALIFICATION REQUIREMENTS FOR DISSIMILAR METAL PIPING WELDS		
Current Requirement	**Proposed Change**	**Reasoning**
	remainder of the flaws shall be oriented circumferentially.	
1.3 Length Sizing Specimens. The specimen set shall include length sizing specimens that meet the following requirements.		Renumbered, re-titled, and moved to new paragraph 3.2.
(a) All length sizing flaws shall be oriented circumferentially.		Moved, and included in new paragraph 3.2(a).
(b) The minimum number of flaws shall be ten.		Moved, and included in new paragraph 2.1 above.
(c) All flaw depths shall be greater than 10% of the nominal pipe wall thickness. At least 1/3 of the flaws, rounded to the next higher whole number, shall have depths between 10% and 30% of the nominal pipe wall thickness. However, flaw depth shall exceed the nominal clad thickness when placed in cladding. At least 1/3 of the flaws, rounded to the next whole number, shall have depths greater than 30% of the nominal pipe wall thickness.		Moved, and included in new paragraph 2.4 above after revision for consistency with detection distribution.
1.4 Depth Sizing Specimens. The specimen set shall include depth sizing specimens that meet the following requirements.		Moved, included in new paragraphs 2.1, 2.3, 2.4
(a) The minimum number of flaws shall be ten.		Moved, included in new paragraph 2.1
(b) Flaws in the sample set shall not be wholly contained within cladding and shall be distributed as follows:		Moved. Potential conflict with old paragraph 1.2(c)(1); "However, flaw depths shall exceed the nominal clad thickness when placed in cladding.". Revised for clarity and included in new paragraph 2.4.

10 CFR 50.55a Request I2R-29
Proposed Revision to ASME Section XI Appendix VIII, Supplement 10

SUPPLEMENT 10 – QUALIFICATION REQUIREMENTS FOR DISSIMILAR METAL PIPING WELDS		
Current Requirement	**Proposed Change**	**Reasoning**
Flaw Depth (% Wall Thickness) / **Minimum Number of Flaws** 10-30% 20% 31-60% 20% 61-100% 20% The remaining flaws shall be in any of the above categories.		Moved, and included in paragraph 2.4 for consistent applicability to detection and sizing samples.
	(b) Sizing Specimen sets shall meet the following requirements.	Added for clarity.
	(1) Length-sizing flaws shall be oriented circumferentially.	Moved from old paragraph 1.3(a).
	(2) Depth sizing flaws shall be oriented as in 2.5(a).	Included for clarity. Previously addressed by omission (i.e., length, but not depth, had a specific exclusionary statement).
2.0 CONDUCT OF PERFORMANCE DEMONSTRATION	**3.0 PERFORMANCE DEMONSTRATION**	Renumbered.
The specimen inside surface and identification shall be concealed from the candidate. All examinations shall be completed prior to grading the results and presenting the results to the candidate. Divulgence of particular specimen results or candidate viewing of unmasked specimens after the performance demonstration is prohibited.	**Personnel and procedure performance demonstration tests shall be conducted according to the following requirements.** **(a) For qualifications from the outside surface, the specimen inside surface and identification shall be concealed from the candidate. When qualifications are performed from the inside surface, the flaw location and specimen identification shall be obscured to maintain a "blind test".** All examinations shall be completed prior to grading the results and presenting the results to the candidate. Divulgence of particular specimen results or candidate viewing of unmasked specimens after the performance demonstration is prohibited.	Differentiate between qualifications conducted from the outside and inside surface.

10 CFR 50.55a Request I2R-29
Proposed Revision to ASME Section XI Appendix VIII, Supplement 10

SUPPLEMENT 10 – QUALIFICATION REQUIREMENTS FOR DISSIMILAR METAL PIPING WELDS		
Current Requirement	**Proposed Change**	**Reasoning**
2.1 Detection Test. Flawed and unflawed grading units shall be randomly mixed	**3.1 Detection Test.**	Renumbered, and moved text to paragraph 3.1(a)(3).
	(a) The specimen set shall include detection specimens that meet the following requirements.	Renumbered, and moved from old paragraph 1.2.
	(1) Specimens shall be divided into grading units. (a) Each grading unit shall include at least 3 in. **(76 mm)** of weld length. (b)The end of each flaw shall be separated from an unflawed grading unit by at least 1 in. **(25 mm)** of unflawed material. A flaw may be less than 3 in. in length. (c) The segment of weld length used in one grading unit shall not be used in another grading unit. (d) Grading units need not be uniformly spaced around the pipe specimen.	Renumbered, and moved from old paragraph 1.2(a). Metrified. No other changes.
	(2) Personnel performance demonstration detection test sets shall be selected from Table VIII-S10-1. The number of unflawed grading units shall be at least 1-1/2 times the number of flawed grading units.	Moved from old paragraph 1.2(b). Table revised to reflect a change in the minimum sample set to 10 and the application of equivalent statistical false call parameters to the reduction in unflawed grading units. Human factors due to large sample size.

10 CFR 50.55a Request I2R-29
Proposed Revision to ASME Section XI Appendix VIII, Supplement 10

SUPPLEMENT 10 – QUALIFICATION REQUIREMENTS FOR DISSIMILAR METAL PIPING WELDS		
Current Requirement	**Proposed Change**	**Reasoning**
	(3) Flawed and unflawed grading units shall be randomly mixed.	Moved from old paragraph 2.1.
	(b) Examination equipment and personnel are qualified for detection when **personnel demonstrations** satisfy the acceptance criteria of Table **VIII S10-1** for both detection and false calls.	Moved from old paragraph 3.1. Modified to reflect the 100% detection acceptance criteria of procedures versus personnel and equipment contained in new paragraph 4.0 and the use of 1.5X rather than 2X unflawed grading units contained in new paragraph 3.1(a)(2). Note, the modified table maintains the screening criteria of the original Table VIII-S2-1.
2.2 Length Sizing Test	**3.2 Length Sizing Test**	Renumbered.
(a) The length sizing test may be conducted separately or in conjunction with the detection test.	**(a) Each reported circumferential flaw in the detection test shall be length-sized.**	Provides consistency between Supplement 10 and the recent revision to Supplement 2 (Reference BC 00-755).

10 CFR 50.55a Request I2R-29
Proposed Revision to ASME Section XI Appendix VIII, Supplement 10

SUPPLEMENT 10 – QUALIFICATION REQUIREMENTS FOR DISSIMILAR METAL PIPING WELDS		
Current Requirement	**Proposed Change**	**Reasoning**
(b) When the length sizing test is conducted in conjunction with the detection test, and less than ten circumferential flaws are detected, additional specimens shall be provided to the candidate such that at least ten flaws are sized. The regions containing a flaw to be sized shall be identified to the candidate. The candidate shall determine the length of the flaw in each region.	(b) When the length-sizing test is conducted in conjunction with the detection test, and less than ten circumferential flaws are detected, additional specimens shall be provided to the candidate such that at least ten flaws are sized. The regions containing a flaw to be sized may be identified to the candidate. The candidate shall determine the length of the flaw in each region.	Change made to ensure security of samples, consistent with the recent revision to Supplement 2 (Reference BC 00-755). Note that length and depth sizing use the term "regions" while detection uses the term "grading units." The two terms define different concepts and are not intended to be equal or interchangeable.
(c) For a separate length sizing test, the regions of each specimen containing a flaw to be sized shall be identified to the candidate. The candidate shall determine the length of the flaw in each region.	(c) For a separate length-sizing test, the regions of each specimen containing a flaw to be sized may be identified to the candidate. The candidate shall determine the length of the flaw in each region.	Change made to ensure security of samples, consistent with the recent revision to Supplement 2 (Reference BC 00-755).
	(d) Examination procedures, equipment, and personnel are qualified for length-sizing when the RMS error of the flaw length measurements, as compared to the true flaw lengths, do not exceed 0.75 in. (19 mm).	Moved from old paragraph 3.2(a). Included "when" as an editorial change. Metrified.
2.3 Depth Sizing Test	**3.3 Depth Sizing Test**	Renumbered.
(a) For the depth sizing test, 80% of the flaws shall be sized at a specific location on the surface of the specimen identified to the candidate.	**(a) The depth-sizing test may be conducted separately or in conjunction with the detection test. For a separate depth-sizing test, the regions of each specimen containing a flaw to be sized may be identified to the candidate. The candidate shall determine the maximum depth of the flaw in each region.**	Change made to ensure security of samples, consistent with the recent revision to Supplement 2 (Reference BC 00-755).
(b) For the remaining flaws, the regions of each specimen containing a flaw to be sized shall be identified to the candidate. The candidate shall determine the maximum depth of the flaw in each region.	**(b) When the depth-sizing test is conducted in conjunction with the detection test, and less than ten flaws are detected, additional specimens shall be provided to the candidate such that at least ten flaws are sized.** The regions of each specimen containing a flaw to be sized may be identified to the	Change made to be consistent with the recent revision to Supplement 2 (Reference BC 00-755). Changes made to ensure security of samples, consistent with the recent revision to Supplement 2 (Reference BC 00-755).

10 CFR 50.55a Request I2R-29
Proposed Revision to ASME Section XI Appendix VIII, Supplement 10

SUPPLEMENT 10 – QUALIFICATION REQUIREMENTS FOR DISSIMILAR METAL PIPING WELDS		
Current Requirement	**Proposed Change**	**Reasoning**
	candidate. The candidate shall determine the maximum depth of the flaw in each region.	
	(c) Examination procedures, equipment, and personnel are qualified for depth sizing when the RMS error of the flaw depth measurements, as compared to the true flaw depths, do not exceed 0.125 in. (3 mm).	Moved from old paragraph 3.2(b). Metrified.
3.0 ACCEPTANCE CRITERIA		Delete as a separate category. Moved to new paragraph detection (3.1) and sizing 3.2 and 3.3.
3.1 Detection Acceptance Criteria. Examination procedures, equipment, and personnel are qualified for detection when the results of the performance demonstration satisfy the acceptance criteria of Table VIII-S2-1 for both detection and false calls.		Moved to new paragraph 3.1(b), reference changed to Table S10 from S2 because of the change in the minimum number of flaws and the reduction in unflawed grading units from 2X to 1.5X.
3.2 Sizing Acceptance Criteria		Deleted as a separate category. Moved to new paragraph on length 3.2 and depth 3.3.
(a) Examination procedures, equipment, and personnel are qualified for length sizing the RMS error of the flaw length measurements, as compared to the true flaw lengths, is less than or equal to 0.75 inch.		Moved to new paragraph 3.2(d), and included word "when" as an editorial change.
(b) Examination procedures, equipment, and personnel are qualified for depth sizing when the RMS error of the flaw depth measurements, as compared to the true flaw depths, is less than or equal to 0.125 in.		Moved to new paragraph 3.3(c).
	4.0 PROCEDURE QUALIFICATION	New.
	Procedure qualifications shall include the following additional requirements. **(a) The specimen set shall include the equivalent of at least three personnel performance**	New. Based on experience gained in conducting qualifications, the equivalent of 3 personnel sets (i.e., a minimum of 30 flaws) is required to provide enough flaws to adequately test the capabilities of

10 CFR 50.55a Request I2R-29
Proposed Revision to ASME Section XI Appendix VIII, Supplement 10

SUPPLEMENT 10 – QUALIFICATION REQUIREMENTS FOR DISSIMILAR METAL PIPING WELDS		
Current Requirement	**Proposed Change**	**Reasoning**
	demonstration test sets. Successful personnel performance demonstrations may be combined to satisfy these requirements. **(b) Detectability of all flaws in the procedure qualification test set that are within the scope of the procedure shall be demonstrated. Length and depth sizing shall meet the requirements of paragraph 3.1, 3.2, and 3.3.** **(c) At least one successful personnel demonstration shall be performed.** **(d) To qualify new values of essential variables, at least one personnel qualification set is required. The acceptance criteria of 4.0(b) shall be met.**	the procedure. Combining successful demonstrations allows a variety of examiners to be used to qualify the procedure. Detectability of each flaw within the scope of the procedure is required to ensure acceptable personnel pass rate. The last sentence is equivalent to the previous requirements and is satisfactory for expanding the essential variables of a previously qualified procedure.

10 CFR 50.55a Request I2R-29
Proposed Revision to ASME Section XI Appendix VIII, Supplement 10

10

TABLE VIII-S~~2~~-1
PERFORMANCE DEMONSTRATION DETECTION TEST ACCEPTANCE CRITERIA

Detection Test Acceptance Critera		False Call Test Acceptance Criteria	
No. of Flawed Grading Units	Minimum Detection Criteria	No. of Unflawed Grading Units	Maximum Number of False Calls
~~5~~	~~5~~	~~10~~	~~0~~
~~6~~	~~6~~	~~12~~	~~1~~
~~7~~	~~6~~	~~14~~	~~1~~
~~8~~	~~7~~	~~16~~	~~2~~
~~9~~	~~7~~	~~18~~	~~2~~
10	8	~~20~~ 15	~~3~~ 2
11	9	~~22~~ 17	~~3~~ 3
12	9	~~24~~ 18	~~3~~ 3
13	10	~~26~~ 20	~~4~~ 3
14	10	~~28~~ 21	~~5~~ 3
15	11	~~30~~ 23	~~5~~ 3
16	12	~~32~~ 24	~~6~~ 4
17	12	~~34~~ 26	~~6~~ 4
18	13	~~36~~ 27	~~7~~ 4
19	13	~~38~~ 29	~~7~~ 4
20	14	~~40~~ 30	~~8~~ 5

10CFR50.55a Request Number I2R-30

Proposed Alternative
In Accordance with 10 CFR 50.55a(a)(3)(i)
--Alternative Provides Acceptable Level of Quality and Safety--

1. ASME Code Component(s) Affected

Class 1 Pressure Retaining Piping Welds examined from the inside surface of Pressurized Water Reactors using procedures, personnel, and equipment qualified to ASME Section XI, Appendix VIII, Supplement 2 or 10 criteria.

SAFE-END WELDS CODE CATEGORY B-F

Code Item	Description	Weld No.
B5.10	Safe-end to Loop A RPV Inlet Nozzle	RV-302-121-A (Note 1)
B5.10	Safe-end to Loop A RPV Outlet Nozzle	RV-301-121-A (Note 1)
B5.10	Safe-end to Loop B RPV Inlet Nozzle	RV-302-121-B (Note 2)
B5.10	Safe-end to Loop B RPV Outlet Nozzle	RV-301-121-B (Note 2)
B5.10	Safe-end to Loop C RPV Inlet Nozzle	RV-302-121-C (Note 2)
B5.10	Safe-end to Loop C RPV Outlet Nozzle	RV-301-121-C (Note 2)
B5.10	Safe-end to Loop D RPV Inlet Nozzle	RV-302-121-D (Note 1)
B5.10	Safe-end to Loop D RPV Outlet Nozzle	RV-301-121-D (Note 2)

SAFE-END WELDS CODE CATEGORY B-J

Code Item	Description	Weld No.
B9.11	Elbow to Loop A RPV Inlet Safe-End Weld	BB-01-F102 (Note 1)
B9.11	Pipe to Loop A RPV Outlet Safe-End Weld	BB-01-F103 (Note 1)
B9.11	Elbow to Loop B RPV Inlet Safe-End Weld	BB-01-F202 (Note 3)
B9.11	Pipe to Loop B RPV Outlet Safe-End Weld	BB-01-F203 (Note 3)
B9.11	Elbow to Loop C RPV Inlet Safe-End Weld	BB-01-F302 (Note 3)
B9.11	Pipe to Loop C RPV Outlet Safe-End Weld	BB-01-F303 (Note 3)
B9.11	Elbow to Loop D RPV Inlet Safe-End Weld	BB-01-F402 (Note 3)
B9.11	Pipe to Loop D RPV Outlet Safe-End Weld	BB-01-F403 (Note 3)

Note 1: These welds are selected for examination by the WCNOC Risk-Informed ISI Program.

Note 2: Due to V. C. Summer hot leg nozzle cracking, it was decided that all inlet and outlet dissimilar metal nozzle-to-safe-end Cat. B-F welds are to be examined during Refuel 14 (Spring 2005).

Note 3: These stainless steel Cat. B-J welds are being examined due to the proximity to the dissimilar metal nozzle-to-safe-end Cat. B-F welds being examined for reasons identified in Notes 1 and 2.

10CFR50.55a Request Number I2R-30

2. Applicable Code Edition and Addenda

Wolf Creek Generating Station is in its second inservice inspection interval, which started on September 3, 1995 and ends on September 2, 2005. The applicable Code edition and addenda is ASME Section XI, "Rules for Inservice Inspection of Nuclear Power Plant Components," 1989 Edition, with no Addenda. In addition, as required by 10 CFR 50.55a, ASME Section XI, 1995 Edition through 1996 Addenda is used for Appendix VIII, Performance Demonstration for Ultrasonic Examination Systems.

3. Applicable Code Requirement

Relief is requested from the qualification requirements contained in ASME Section XI, 1995 Edition through 1996 Addenda, Appendix VIII Supplement 2 and Supplement 10 as specified in Table VIII-3110-1, for applicable piping welds.

4. Reason for Request

Each Wolf Creek reactor pressure vessel (RPV) nozzle to main coolant piping configuration is fabricated using ferritic, austenitic, and cast stainless components and assembled using austenitic and dissimilar metal welds. These austenitic and dissimilar metal welds are in close proximity to each other, which means the same ultrasonic essential variables are used for each weld and the most challenging ultrasonic examination process is employed (e.g., the ultrasonic examination process associated with a dissimilar metal weld would be applied to a ferritic or austenitic weld).

With regard to qualification requirements for the inspection of such welds, separate qualifications to Supplements 2, 3, and 10 are redundant when done in accordance with the industry's Performance Demonstration Initiative (PDI) Program. For example, during a personnel qualification to the PDI Program, the candidate would be exposed to a minimum of 10 flawed grading units for each individual supplement. Personnel qualification to Supplements 2, 3, and 10 would therefore require a total of 30 flawed grading units. Test sets this large and tests of this duration are impractical. Additionally, a full procedure qualification (i.e. 3 personnel qualifications) to the PDI Program requirements would require 90 flawed grading units. This is particularly burdensome for a procedure that will use the same essential variables or the same criteria for selecting essential variables for all 3 supplements.

To resolve these issues, the PDI Program recognizes the Supplement 10 qualification as the most stringent and technically challenging ultrasonic application. The same essential variables are used for the examinations subject to the requirements of Supplements 2, 3, and 10. A coordinated add-on implementation would be sufficiently stringent for qualification to the requirements of Supplements 2 and 3 if the requirements used for qualification to Supplement 10 are satisfied as a prerequisite. The basis for this conclusion is the fact that the majority of the flaws addressed in Supplement 10 are located wholly in austenitic weld material. This configuration is known to be challenging for ultrasonic techniques due to the variable dendritic structure

10CFR50.55a Request Number I2R-30

7. Precedents

The NRC has granted similar relief to Callaway Plant [Reference AmerenUE Callaway Plant letter, dated August 14, 2003, Docket No. 50-483, "Requests for Relief Regarding Implementation of ASME Section XI Appendix VIII Requirements", and the associated NRC Safety Evaluation, letter from Stephen Dembek to Garry Randolph (Union Electric Company) dated April 7, 2004; Subject: Callaway Plant Unit 1 – Relief Request ISI-27 through ISI-31 Pertaining to Implementation of ASME Section XI Appendix VIII Requirements (TAC Nos. MC04478 through MC04482, respectively)].

10 CFR 50.55a Request Number I2R-30

SUPPLEMENT 14 - QUALIFICATION REQUIREMENTS FOR COORDINATED IMPLEMENTATION OF SUPPLEMENT 10, 2 AND 3 FOR PIPING EXAMINATIONS PERFORMED FROM THE INSIDE SURFACE	
Proposed Requirements	**Technical Basis**
1.0 SCOPE	
This Supplement is applicable to wrought austenitic, ferritic and dissimilar metal piping welds examined from the inside surface. This Supplement provides for expansion of Supplement 10 qualifications to permit coordinated qualification for Supplements 2 and 3.	There is currently no available Code action allowing for a coordinated implementation of the fundamental qualifications required for the typical examinations performed from the ID of PWR nozzles. Without this Code Case/Change, qualifications would require an excessive amount of flawed and unflawed grading units. This proposed supplement uses the more technically stringent Supplement 10 qualification as a base and then incorporates a limited number of Supplement 2 and Supplement 3 samples. This proposal is consistent with the philosophy of Supplement 12, the proposed changes to Supplement 10, and the approved changes to Supplement 2 and 11.
2.0 SPECIMEN REQUIREMENTS Qualification test specimens shall meet the requirements listed herein, unless a set of specimens is designed to accommodate specific limitations stated in the scope of the examination procedure (e.g., pipe size, access limitations). The same specimens may be used to demonstrate both detection and sizing qualification.	
2.1General The specimen set shall conform to the following requirements.	
(a) Specimens shall have sufficient volume to minimize spurious reflections that may interfere with the interpretation process.	
(b) The specimen set shall include the minimum and maximum pipe diameters and thicknesses for which the examination procedure is applicable. Applicable tolerances are provided in Supplements 2, 3, and 10.	Tolerances are from the applicable Supplements because Supplement 2 and 3 dimensions and tolerances are typically based on wrought nominal pipe size that is not appropriate for DM welds that are typically associated with forged and machined safe ends.
(c) The specimen set shall include examples of the following fabrication conditions: (1) geometric and material conditions that normally require discrimination from flaws (e.g., counterbore or weld root conditions, cladding, weld buttering, remnants of previous welds, adjacent welds in close proximity, and weld repair areas);	

10 CFR 50.55a Request Number I2R-30

SUPPLEMENT 14 - QUALIFICATION REQUIREMENTS FOR COORDINATED IMPLEMENTATION OF SUPPLEMENT 10, 2 AND 3 FOR PIPING EXAMINATIONS PERFORMED FROM THE INSIDE SURFACE	
Proposed Requirements	**Technical Basis**
(2) typical limited scanning surface conditions (e.g., internal tapers, exposed weld roots, and cladding conditions).	
2.2 Supplement 2 Flaws (a) At least 70% of the flaws shall be cracks, the remainder shall be alternative flaws. (b) Specimens with IGSCC shall be used when available. (c) Alternative flaws, if used, shall provide crack-like reflective characteristics and shall comply with the following: (1) Alternative flaws shall be used only when implantation of cracks produces spurious reflectors that are uncharacteristic of service-induced flaws. (2) Alternative flaws shall have a tip width of less than or equal to 0.002 in. (0.05 mm).	
2.3 Supplement 3 Flaws Supplement 3 flaws shall be mechanical or thermal fatigue cracks.	
2.4 Distribution The specimen set shall contain a representative distribution of flaws. Flawed and unflawed grading units shall be randomly mixed.	Since the number of flaws will be limited words such as "uniform distribution" could lead to testmanship and are considered inappropriate.
3.0 PERFORMANCE DEMONSTRATION	
Personnel and procedure performance demonstration tests shall be conducted according to the following requirements. (a) The same essential variable values, or, when appropriate, the same critieria for selecting values as demonstrated in Supplement 10 shall be used. (b) The flaw location and specimen identification shall be obscured to maintain a "blind test". (c) All examinations shall be completed prior to grading the results and presenting the results to the candidate. Divulgence of particular specimen results or candidate viewing of unmasked specimens after the performance demonstration is prohibited.	
3.1 Detection Test	
(a) The specimen set for Supplement 2 qualification shall include at least five flawed grading units and ten unflawed grading units in austenitic piping. A maximum of one flaw shall be oriented axially.	
(b) The specimen set for Supplement 3	

10 CFR 50.55a Request Number I2R-30

SUPPLEMENT 14 - QUALIFICATION REQUIREMENTS FOR COORDINATED IMPLEMENTATION OF SUPPLEMENT 10, 2 AND 3 FOR PIPING EXAMINATIONS PERFORMED FROM THE INSIDE SURFACE	
Proposed Requirements	**Technical Basis**
qualification shall include at least three flawed grading units and six unflawed grading units in ferritic piping. A maximum of one flaw shall be oriented axially.	
(c) Specimens shall be divided into grading units. (1) Each grading unit shall include at least 3 in. (76 mm) of weld length. (2) The end of each flaw shall be separated from an unflawed grading unit by at least 1 in. (25 mm) of unflawed material. A flaw may be less than 3 in. (76 mm) in length. (3) The segment of weld length used in one grading unit shall not be used in another grading unit. (4) Grading units need not be uniformly spaced around the pipe specimen.	
(d) All grading units shall be correctly identified as being either flawed or unflawed.	
3.2 Length-sizing Test	
(a) The coordinated implementation shall include the following requirements for personnel length sizing qualification.	
(b) The specimen set for Supplement 2 qualification shall include at least four flaws in austenitic material.	Axial flaws are not length sized in Supplement 2.
(c) The specimen set for Supplement 3 qualification shall include at least three flaws in ferritic material.	
(d) Each reported circumferential flaw in the detection test shall be length sized. When only length-sizing is being tested, the regions of each specimen containing a flaw to be sized may be identified to the candidate. The candidate shall determine the length of the flaw in each region.	
(e) Supplement 2 or Supplement 3 examination procedures, equipment, and personnel are qualified for length-sizing when the flaw lengths estimated by ultrasonics, as compared with the true lengths, do not exceed 0.75 in. (19 mm) RMS, when they are combined with a successful Supplement 10 qualification.	
3.3 Depth-sizing Test	
The coordinated implementation shall include the following requirements for personnel depth-sizing qualification.	
(a) The specimen set for Supplement 2 qualification shall include at least four	Axial flaws are not depth sized in Supplement 2.

10 CFR 50.55a Request Number I2R-30

SUPPLEMENT 14 - QUALIFICATION REQUIREMENTS FOR COORDINATED IMPLEMENTATION OF SUPPLEMENT 10, 2 AND 3 FOR PIPING EXAMINATIONS PERFORMED FROM THE INSIDE SURFACE	
Proposed Requirements	**Technical Basis**
circumferentially oriented flaws in austenitic material.	
(b) The specimen set for Supplement 3 qualification shall include at least three flaws in ferritic material.	
(c) For a separate depth-sizing test, the regions of each specimen containing a flaw to be sized may be identified to the candidate. The candidate shall determine the depth of the flaw in each region.	
(d) Supplement 2 or Supplement 3 examination procedures, equipment, and personnel are qualified for depth-sizing when the flaw depths estimated by ultrasonics, as compared with the true depths, do not exceed 0.125 in. (3 mm) RMS, when they are combined with a successful Supplement 10 qualification.	
4.0 PROCEDURE QUALIFICATION	
Procedure qualifications shall include the following additional requirements. (a) The specimen set shall include the equivalent of at least three personnel performance demonstration test sets. Successful personnel performance demonstrations may be combined to satisfy these requirements. (b) Detectability of all flaws in the procedure qualification test set that are within the scope of the procedure shall be demonstrated. Length and depth sizing shall meet the requirements of 3.1, 3.2, and 3.3. (c) At least one successful personnel demonstration shall be performed. (d) To qualify new values of essential variables, at least one personnel performance demonstration is required. The acceptance criteria of 4.0(b) shall be met.	

10 CFR 50.55a Request Number I2R-31

Proposed Alternative
In Accordance with 10 CFR 50.55a(a)(3)(i)
--Alternative Provides Acceptable Level of Quality and Safety--

1. ASME Code Component(s) Affected

ASME Category B-A Pressure Retaining Welds In Reactor Pressure Vessel (RPV), Item No. B1.30 upper shell to flange weld from flange Inside Diameter (ID).

Weld No.: RV-101-121

2. Applicable Code Edition and Addenda

Wolf Creek Generating Station is in its second inservice inspection interval, which started on September 3, 1995 and ends on September 2, 2005. The applicable Code edition and addenda is ASME Section XI, "Rules for Inservice Inspection of Nuclear Power Plant Components," 1989 Edition, with no Addenda. In addition, as required by 10 CFR 50.55a, ASME Section XI, 1995 Edition through 1996 Addenda is used for Appendix VIII, Performance Demonstration for Ultrasonic Examination Systems.

3. Applicable Code Requirement

ASME Section XI, "Rules for Inservice Inspection of Nuclear Power Plant Components," 1989 Edition, No Addenda, Subsection IWA-2232 and Appendix I, Subparagraph I-2110, requires UT examination of the RPV shell-to-flange weld to be in accordance with ASME Code, Section V, Article 4. In addition, WCNOC has committed to follow Regulatory Guide 1.150, Revision 1, "Ultrasonic Testing of Reactor Vessel Welds during Preservice and Inservice Examinations," which augments the ultrasonic testing (UT) examination of RPV welds.

4. Reason for Request

WCNOC is required to perform inservice examination of the RPV shell-to-flange weld in accordance with the requirements of ASME Section V Article 4 and the augmented requirements of Regulatory Guide 1.150 Rev 1.

10 CFR 50.55a Codes and Standards requires that ASME Section XI, Appendix VIII, Supplement 4, "Qualification Requirements For The Clad/Base Metal Interface of Reactor Vessel," and Supplement 6, "Qualification Requirements For Reactor Vessel Welds Other Than Clad/Base Metal Interface," be implemented for most of the RPV welds by Nov 22, 2000. The RPV shell-to-flange and closure head-to-flange welds are not required to be conducted in accordance with Appendix VIII.

This relief is requested to allow the use of a Performance Demonstration Initiative (PDI) qualified procedure to complete the UT examination of the RPV shell-to-flange weld from the vessel ID surface of the weld in accordance with ASME Section XI, Div. 1, 1995 Edition through 1996 Addenda, Appendix VIII Supplement 4 and 6 as amended by the 10 CFR 50.55a in lieu of ASME Section V, Article 4.

10 CFR 50.55a Request Number I2R-31

5. Proposed Alternative and Basis for Use

During the upcoming ten (10) year RPV weld examinations, WCNOC will be employing personnel, procedures and equipment that are demonstrated and qualified by PDI and in accordance with ASME Section XI, Div.1, 1995 Edition through 1996 Addenda, Appendix VIII, Supplements 4 and 6 as amended by 10 CFR 50.55a for applicable RPV welds.

The remote examinations will be performed using the Westinghouse SUPREEM Robot and the Paragon UT data acquisition system in accordance with a PDI qualified procedure. The Westinghouse procedure PDI-ISI-254, "Remote Inservice Examination of Reactor Vessel Shell Welds," in accordance with ASME Section XI, Appendix VIII, Supplements 4 and 6, was demonstrated at the PDI qualification session in 2001 (Performance Demonstration Qualification Sheet (PDQS) No. 407). The procedure complies with ASME Section XI, Appendix VIII, 1995 Edition through 1996 Addenda as modified by 10 CFR 50.55a.

Appendix VIII was developed to ensure the effectiveness of UT examinations within the nuclear industry by means of a rigorous, item-specific performance demonstration. The performance demonstration was conducted on a RPV mockup containing flaws of various sizes and locations. The demonstration established the capability of equipment, procedures, and personnel to find flaws that could be detrimental to the integrity of the RPV.

Although Appendix VIII is not a requirement for this weld, the qualification process to Appendix VIII criteria demonstrates that the examination and evaluation techniques are equal to or surpass the requirements of paragraph IWA-2232 and Appendix I subparagraph I-2110 of Section XI of the ASME Code and the guidance in RG 1.150.

A comparison between the ASME Code, Section V, Article 4 based UT methods and the procedures developed to satisfy the PDI/Appendix VIII can be best described as a comparison between a compliance-based procedure (ASME Code, Section V, Article 4) and a results-based procedure (PDI Appendix VIII). ASME Code, Section V procedures use an amplitude-based technique and a known reflector. The proposed alternate UT method was established independently from the acceptance standards for flaw size found in ASME Code, Section XI.

The PDI qualified sizing method is considered more accurate than the method used in ASME Code, Section V, Article 4. The proposed alternate UT examination technique provides an acceptable level of quality and examination repeatability as compared to the Article 4 requirements.

The PDI Program's PDQS No. 407 attests that Westinghouse procedure PDI-ISI-254 is in compliance with the detection and sizing tolerance requirements of Appendix VIII. The PDI qualification method is based on a group of samples, which validate the acceptable flaw sizes in ASME Section XI. The sensitivity to detect these flaws is considered to be equal to or greater than the sensitivity obtained through ASME Section V Article 4 because the Westinghouse procedure PDI-ISI-254 relies on a smaller scan index and a higher scan sensitivity for the detection of the UT signals.

10 CFR 50.55a Request Number I2R-31

The examination and sizing procedure uses echo-dynamic motion and tip diffraction characteristics of the flaw instead of the amplitude characteristics required by ASME Code, Section V, Article 4. The search units interrogate the same examination volume as depicted by ASME Code, Section XI, Figure IWB-2500-4, "Shell-to-Flange Weld Joint."

The use of procedures for satisfying the requirements of ASME Code, Section V, Article 4 for the UT examination of the RPV shell-to-flange weld from the vessel shell ID has not received the same qualifications as a PDI qualified procedure.

The PDI qualification specimens are curved vessel shell plate sections and do not have taper transition geometry. However, the procedure is used to examine reactor vessel shell welds, which have taper transitions at weld joints of dissimilar thickness. The PDI qualification for Supplements 4 and 6 allows for examination of material thickness up to 12.3 inches or a metal path distance of 17.5 inches in the case of the 45 degree transducer. This qualified test range bounds a significant percentage of the flange-to-shell weld examination volume even in the thicker portion above the weld centerline.

Wolf Creek's RPV flange-to-shell weld was examined during pre-service by remote automated inspection in accordance with Section XI. The pre-service examination was performed from the vessel ID surface, using Section XI techniques at 0 degree longitudinal and 45 and 60 degree shear beam angles. Examination from the flange surface was performed using 0, 8, and 19 degree longitudinal. For inservice examinations, during the first interval the weld examination from flange surface was performed in accordance with Section XI using 0, 8, and 19 degree longitudinal. The weld ID surface examination was performed using 45 and 60 degree shear wave, and 0, 45, and 70 degree longitudinal beam angles by remote automated inspection in accordance with Section XI and Regulatory Guide 1.150 Revision 1. No matters of concern were identified during the aforementioned examinations.

The use of Appendix VIII Supplements 4 and 6 for the completion of the RPV shell-to-flange weld from the shell ID side (which PDI has qualified) is expected to reduce examination time, which translates to reduced personnel radiation exposure.

Additionally, this relief would allow a smooth transition to the welds adjacent to the RPV circumferential and longitudinal welds (welds B 1.11 and B 1.12), which do require an examination in accordance with Appendix VIII, Supplements 4 and 6. This would eliminate the need to switch to the different calibrations, procedure, and technique required by ASME Code, Section V, Article 4 and Regulatory Guide 1.150, Rev 1. This would result in a reduction in transition time to the different calibration, procedure, and technique required, which translates to reduced personnel radiation exposure and is more cost effective.

For ultrasonic examination of the reactor vessel shell-to-flange weld conducted from the face of the flange, the examination procedure shall continue to meet the requirements of the 1989 Edition of ASME Section XI, Category B-A and ASME Section V, Article 4 as

10 CFR 50.55a Request Number I2R-31

augmented by Regulatory Guide 1.150 Rev. 1. This examination has already been completed and is not part of the reactor vessel examinations to be performed in conjunction with the 10-year vessel examinations in Refuel 14.

Alternate Examinations

The automated shell-to-flange weld examinations from the shell inside diameter shall be performed using a qualified procedure in accordance with ASME Code, Section XI, Div. 1, 1995 Edition through 1996 Addenda, Appendix VIII, Supplements 4 and 6 as amended by 10 CFR 50.55a. All other ASME Section XI Code requirements for which relief is not specifically requested remain applicable, including third party review by the Authorized Nuclear Inservice Inspector.

The Appendix VIII criteria were developed to ensure the effectiveness of UT examinations within the nuclear industry by means of a rigorous, item-specific performance demonstration. The performance demonstration was conducted on RPV mockups containing flaws of various sizes and locations. The demonstration established the capability of equipment, procedures, and personnel to find flaws that could be detrimental to the integrity of the RPV. The performance demonstration showed that the proposed UT technique is equal to or surpasses the requirements of the Code and the recommendations of Regulatory Guide 1.150. Therefore, there is reasonable assurance that the proposed alternative provides an acceptable level of quality and safety.

6. Duration of Proposed Alternative

The proposed alternative is requested for the duration of the second inservice inspection interval.

7. Precedents

The NRC has granted similar relief to Callaway Plant [Reference AmerenUE Callaway Plant letter, dated August 14, 2003, Docket No. 50-483, "Requests for Relief Regarding Implementation of ASME Section XI Appendix VIII Requirements", and the associated NRC Safety Evaluation, letter from Stephen Dembek to Garry Randolph (Union Electric Company) dated April 7, 2004; Subject: Callaway Plant Unit 1 – Relief Request ISI-27 through ISI-31 Pertaining to Implementation of ASME Section XI Appendix VIII Requirements (TAC Nos. MC04478 through MC04482, respectively)].

10 CFR 50.55a Request Number I2R-32

Proposed Alternative
In Accordance with 10 CFR 50.55a(a)(3)(i)
--Alternative Provides Acceptable Level of Quality and Safety--

1. ASME Code Component(s) Affected

Class 1 Reactor Pressure Vessel Pressure-Retaining Nozzle-to-Vessel welds.

NOZZLE WELDS CODE CATEGORY B-D

Code Item	Description	Weld No.
B3.90	Loop A Outlet Nozzle to Vessel Weld	RV-107-121-A
B3.90	Loop A Inlet Nozzle to Vessel Weld	RV-105-121-A
B3.90	Loop B Inlet Nozzle to Vessel Weld	RV-105-121-B
B3.90	Loop B Outlet Nozzle Vessel Weld	RV-107-121-B
B3.90	Loop C Outlet Nozzle to Vessel Weld	RV-107-121-C
B3.90	Loop C Inlet Nozzle to Vessel Weld	RV-105-121-C
B3.90	Loop D Inlet Nozzle to Vessel Weld	RV-105-121-D
B3.90	Loop D Outlet to Vessel Weld	RV-107-121-D

2. Applicable Code Edition and Addenda

Wolf Creek Generating Station is in its second inservice inspection interval, which started on September 3, 1995 and ends on September 2, 2005. The applicable Code edition and addenda is ASME Section XI, "Rules for Inservice Inspection of Nuclear Power Plant Components," 1989 Edition, with no Addenda. In addition, as required by 10 CFR 50.55a, ASME Section XI, 1995 Edition through 1996 Addenda is used for Appendix VIII, Performance Demonstration for Ultrasonic Examination Systems.

3. Applicable Code Requirement

ASME Section XI 1989 Edition with no addenda, Table IWB-2500-1, Examination Category B-D, Item B3.90, Figure IWB-2500-7(a) requires volumetric examination of a minimum volume of base material on each side of the weld equal to a distance of $t_s/2$ (one half of the RPV shell thickness adjacent to the weld).

4. Reason for Request

The required examination volume for the RPV nozzle-to-shell welds extends far beyond the weld into the base material and is unnecessarily large. The Section XI examination volume for the pressure retaining nozzle-to-vessel welds extends from the edge of the weld on the nozzle side and includes a substantial portion of the nozzle forging (radially inward) and the RPV upper shell course (radially outward). This large volume causes a major increase in examination time with no resultant increase in quality or safety. The proposed alternative would define the examination volume as the weld and one-half inch of base material on each side of the widest portion of the weld. The Code required examination volume defined by Figure IWB-2500-7(a) was ultrasonically examined during preservice and subsequent inservice examinations to the maximum extent

10 CFR 50.55a Request Number I2R-32

possible. The preservice examination and the first interval inservice examinations identified no recordable indications in the Code required volume that were outside of the volume defined in Code Case N-613-1, Figure 1. Relief is requested to use the examination volume shown in Code Case N-613-1 Figure 1 in lieu of the examination volume requirements of ASME Section XI, Figure IWB-2500-7(a), 1989 Edition with no addenda.

5. Proposed Alternative and Basis for Use

In lieu of the requirements of ASME Section XI, Figure IWB-2500-7(a), WCNOC proposes to reduce the examination volume to that shown in Figure 1 of Code Case N-613-1. All other ASME Section XI Code requirements for which relief is not specifically requested remain applicable, including third party review by the Authorized Nuclear Inservice Inspector.

The proposed examination volume for the inlet and outlet nozzles is shown on the attached vendor scan plans. The scan plans are derived from the vessel manufacturer design drawings, which are the most dependable source for weld location, size and thickness. As added conservatism, the vendor scan plans have included an additional 0.5 inch of radial scan path on each side of the weld to ensure that the boundaries of the weld are covered by the ultrasonic beams.

Stresses caused by welding are concentrated at the weld and heat affected zone. Post weld heat treatment reduces these stresses and any residual stresses decrease as a function of the distance from the weld.

Operational stresses originate from internal pressure in the vessel and temperature changes occurring during transients. These stresses are limited by design to ensure that ASME Code stress limits are not exceeded. Additionally, a fatigue analysis is required by ASME Section III to ensure that flaws are unlikely to initiate during operation. Compared to the Code limit of 1.0, the maximum fatigue usage in the nozzle-to-shell weld regions are 0.1104 for the inlet nozzles and 0.324 for the outlet nozzles.

Therefore, because stresses are reduced by post weld heat treatment and design requirements, the occurrence of flaws during service is unlikely in the volume excluded by the use of Case N-613-1. Cracks, should they initiate, occur in the higher stressed area of the weld. The higher stressed areas are within the volume included in the reduced examination volume of Case N-613-1.

During preceding preservice and first interval ultrasonic examinations, no recordable indications were found in the RPV nozzle to vessel weld examination volume excluded by Code Case N-613-1. These examinations were conducted from the inside surface of the RPV and the inside diameter of the nozzle in accordance with ASME Section V, Article 4 and Regulatory Guide 1.150, Rev. 1. The previous ultrasonic examinations used an automated system to acquire, analyze and store data. The ultrasonic examinations scheduled for the current interval will use personnel, automated equipment and procedures qualified in accordance with ASME Section XI, Appendix VIII, Supplements 4, 6 and 7, 1995 Edition through the 1996 Addenda, as amended by 10 CFR 50.55a. These Section XI Appendix VIII examinations will interrogate the weld

10 CFR 50.55a Request Number I2R-32

and base metal volume specified in Code Case N-613-1 from the nozzle bore and from the vessel inside diameter surface using techniques and procedures specifically qualified to inspect nozzle-to-vessel welds. These procedures were qualified in accordance with ASME Section XI, Appendix VIII, Supplement 7 for examinations from the nozzle bore and Supplements 4 and 6 for examinations from the vessel inside diameter surface, as amended by 10 CFR 50.55a. WCNOC is confident that satisfactory comparisons can be made between past and present examinations, if necessary.

The following table provides additional information on the RPV nozzles:

Component ID	Description	Azimuth	Code Case N-613-1 Figure	Full Exam Coverage Completed[1]	Previous Weld Repair[2]	Repair in Code Case Boundary
RV-107-121-A	Outlet Nozzle to Shell Weld	22°	1	PSI and 1st Interval ISI	No	N/A
RV-105-121-A	Inlet Nozzle to Shell Weld	67°	1	PSI and 1st Interval ISI	No	N/A
RV-105-121-B	Inlet Nozzle to Shell Weld	113°	1	PSI and 1st Interval ISI	No	N/A
RV-107-121-B	Outlet Nozzle to Shell Weld	158°	1	PSI and 1st Interval ISI	No	N/A
RV-107-121-C	Outlet Nozzle to Shell Weld	202°	1	PSI and 1st Interval ISI	No	N/A
RV-105-121-C	Inlet Nozzle to Shell Weld	247°	1	PSI and 1st Interval ISI	No	N/A
RV-105-121-D	Inlet Nozzle to Shell Weld	293°	1	PSI and 1st Interval ISI	No	N/A
RV-107-121-D	Outlet Nozzle to Shell Weld	338°	1	PSI and 1st Interval ISI	No	N/A

Note 1: Coverage of the examination volume as shown in ASME Section XI, Figure IWB-2500-7(a) was performed to the maximum extent possible using a combination of angles to achieve maximum coverage but was limited due to the scanning requirements contained in ASME Section V, Article 4 which was used to examine these welds in the first interval. The Preservice examinations were also performed to the maximum extent possible but were also limited.

Note 2: Station personnel investigated the weld repair issue and it is confidently concluded that no weld repairs were performed since original construction. The on-site documentation of the vessel fabrication was reviewed. No evidence was found of weld repairs being made to the nozzle-to-shell welds.

For the reasons discussed above, the proposed alternative will provide an acceptable level of quality and safety.

10 CFR 50.55a Request Number I2R-32

6. Duration of Proposed Alternative

The proposed alternative is requested for the duration of the second inservice inspection interval.

7. Precedents

The NRC has granted similar relief to Duke Power for Catawba Unit 2 [Reference Duke letters dated August 6, 2004, Docket No. 50-414, "Relief Request for Alternative to ASME Section XI Appendix ", and dated September 15, 2004, Docket No. 50-414, "Response to Request for Additional Information", and the associated NRC Safety Evaluation dated October 7, 2004.]

10 CFR 50.55a Request Number I2R-32

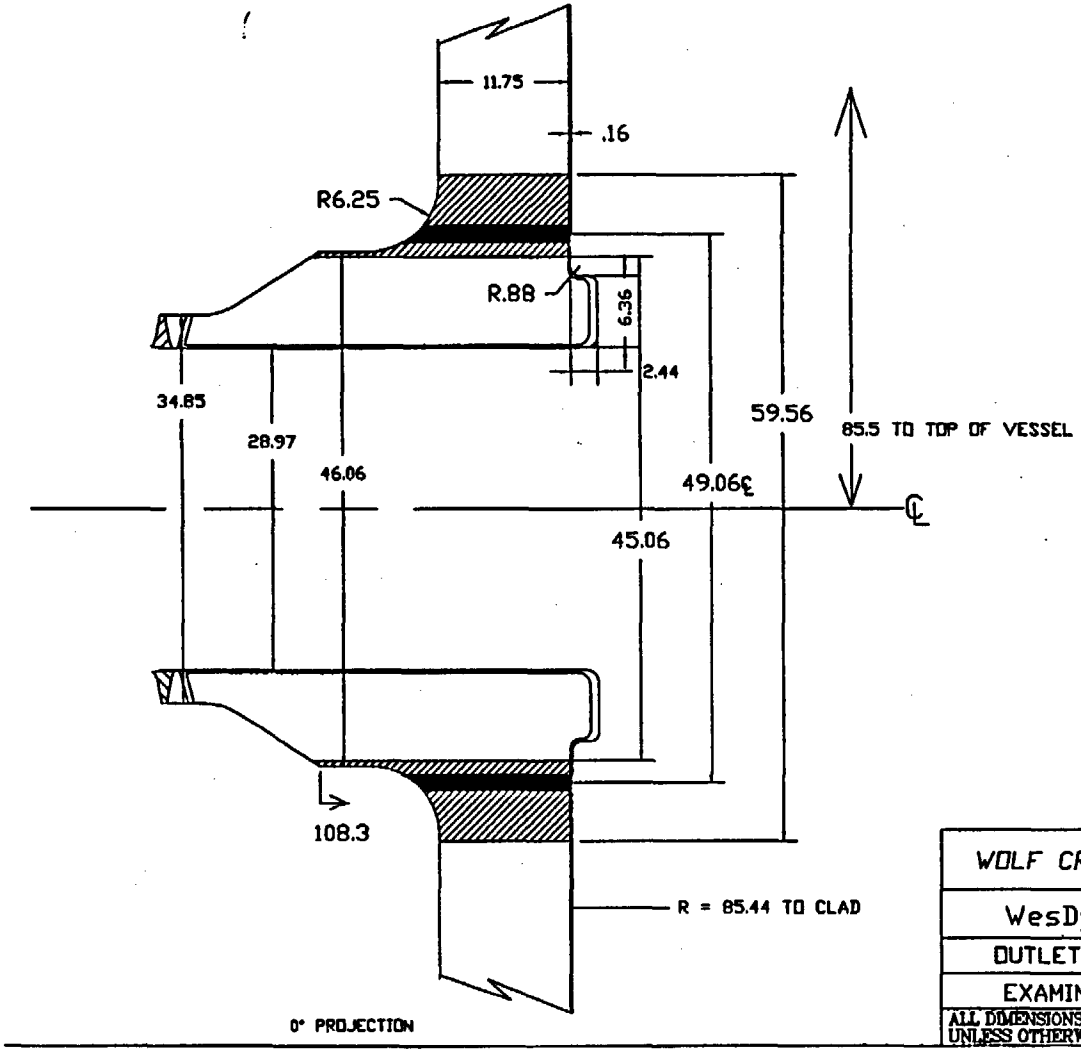

WOLF CREEK RVISI 2005 - SAP
WesDyne International
OUTLET NOZZLE CONFIGURATION
EXAMINATION PROGRAM PLAN
ALL DIMENSIONS IN INCHES UNLESS OTHERWISE NOTED — SHEET 6 OF 21

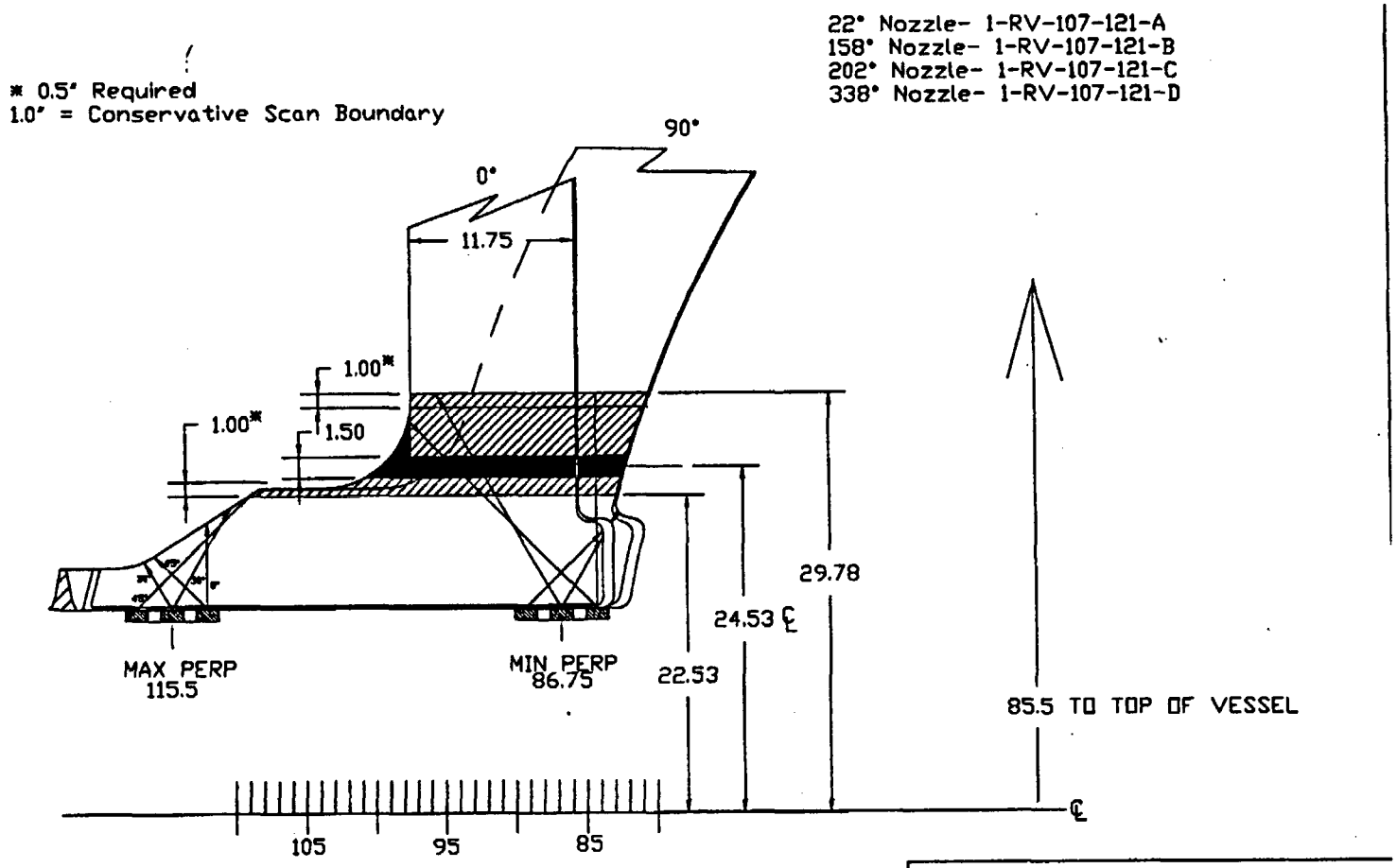

SCANNING INCREMENT
FOR BORE EXAMS - .584"
OR .146"

WOLF CREEK RVISI 2005 - SAP
WesDyne International
OUTLET NOZZLE TO SHELL WELD
EXAMINATION PROGRAM PLAN
ALL DIMENSIONS IN INCHES UNLESS OTHERWISE NOTED — SHEET 7 OF 21

10 CFR 50.55a Request Number I2R-32

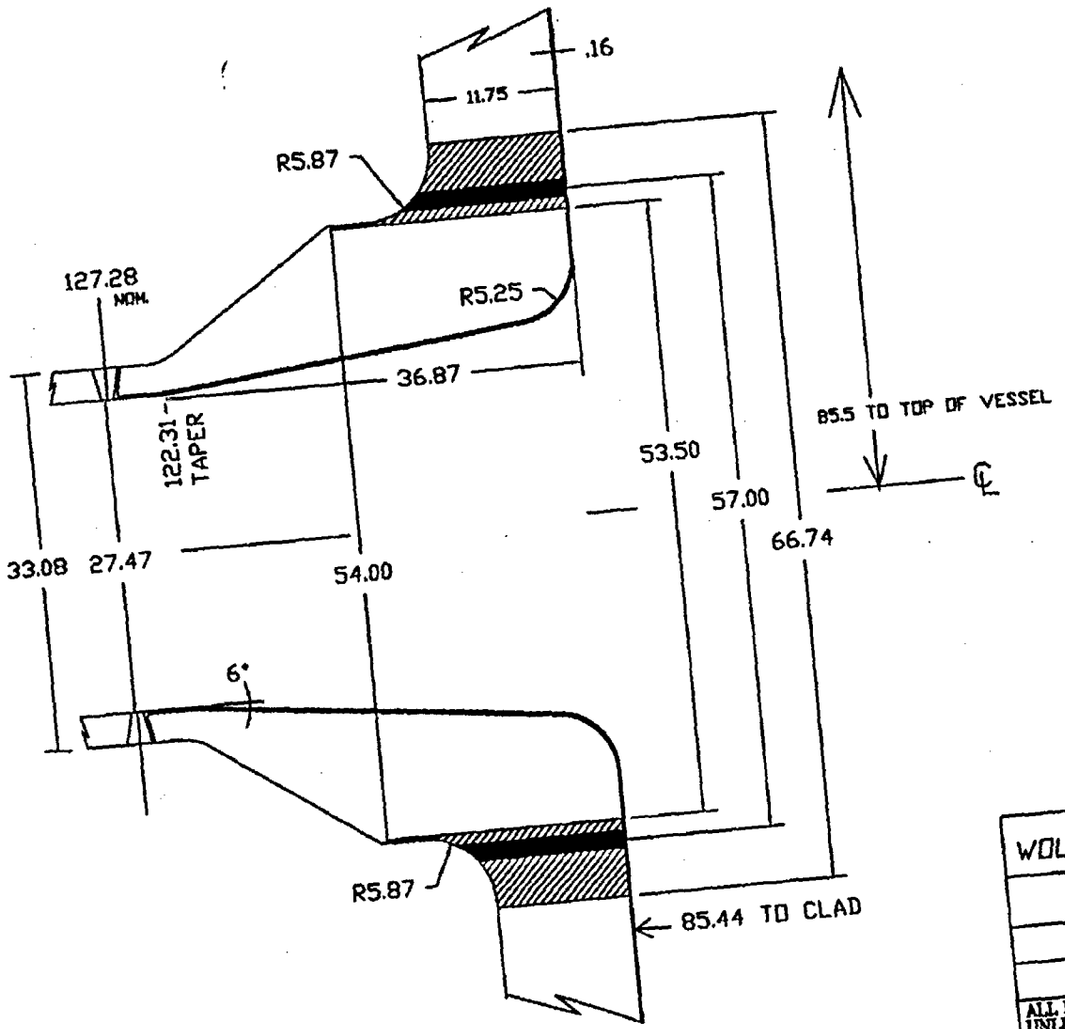

WOLF CREEK RVISI 2005 - SAP

WesDyne International

INLET NOZZLE CONFIGURATION

EXAMINATION PROGRAM PLAN

ALL DIMENSIONS IN INCHES UNLESS OTHERWISE NOTED | SHEET 10 OF 21

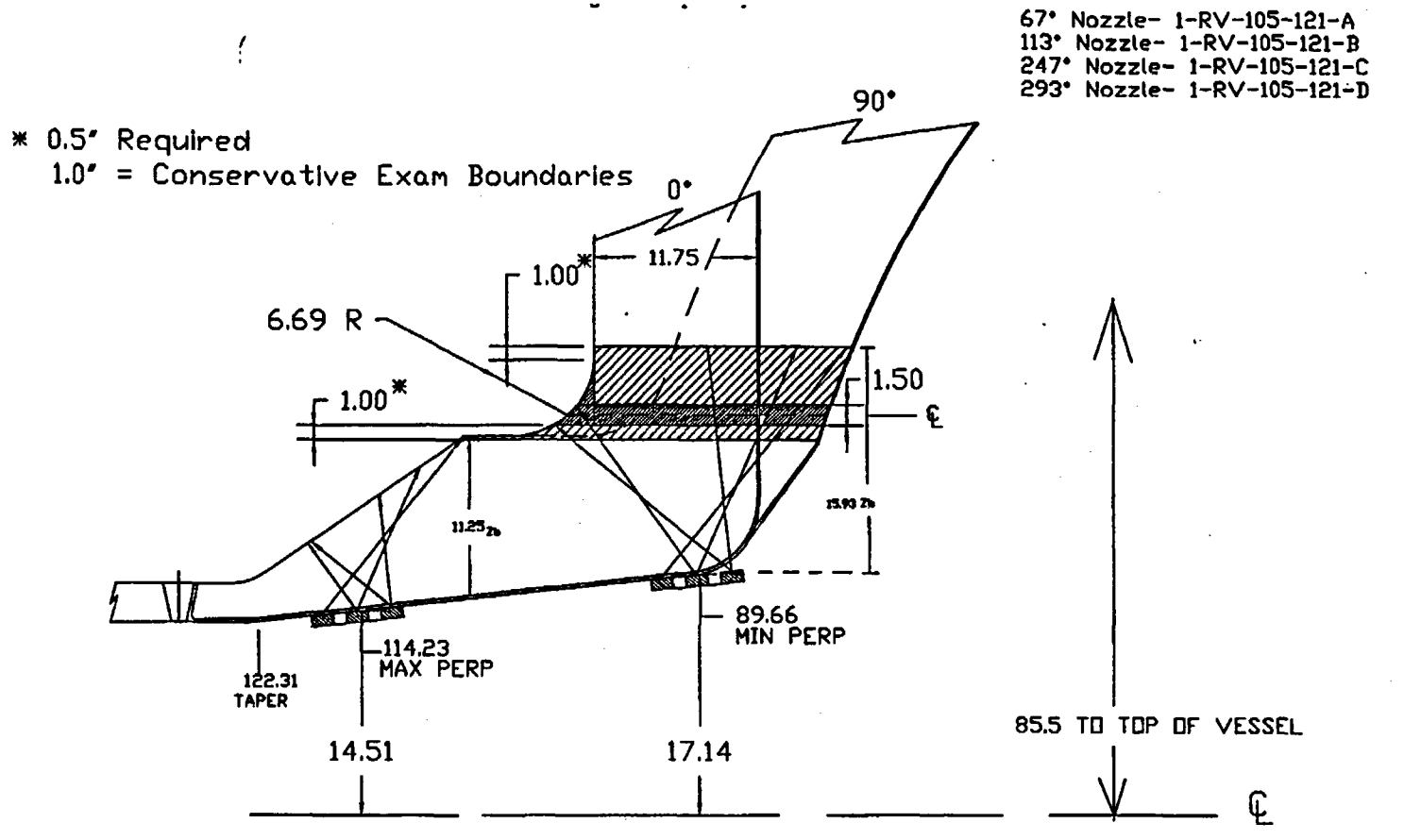

BORE SCANNING INCREMENT
IS .503° OR .12"

WOLF CREEK RVISI 2005 - SAP
WesDyne International
INLET NOZZLE TO SHELL (BORE)
EXAMINATION PROGRAM PLAN
ALL DIMENSIONS IN INCHES UNLESS OTHERWISE NOTED — SHEET 11 OF 21