COLOR TABLE-I DRIVER-L

THIS DRAWING IS COLOR CODED FOR LICENSE RENEWAL.

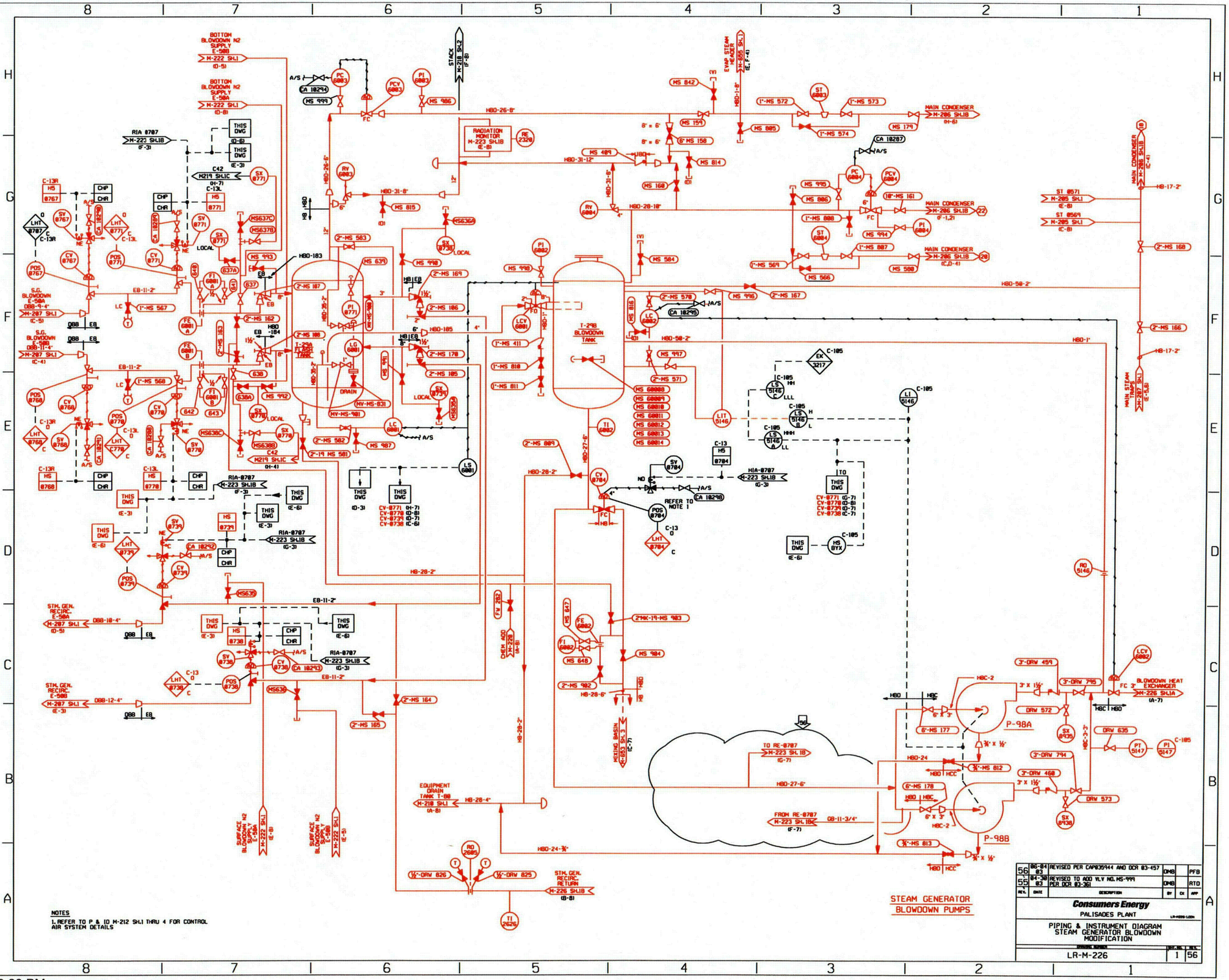

RED=IN SCOPE FOR LR
BLACK=NOT IN SCOPE

...\dwgrev2-lr\LR-M226-1.dgn 03/21/2005 02:18:38 PM

C91

COLOR TABLE-2 DRIVER-L2

THIS DRAWING IS COLOR CODED FOR LICENSE RENEWAL.

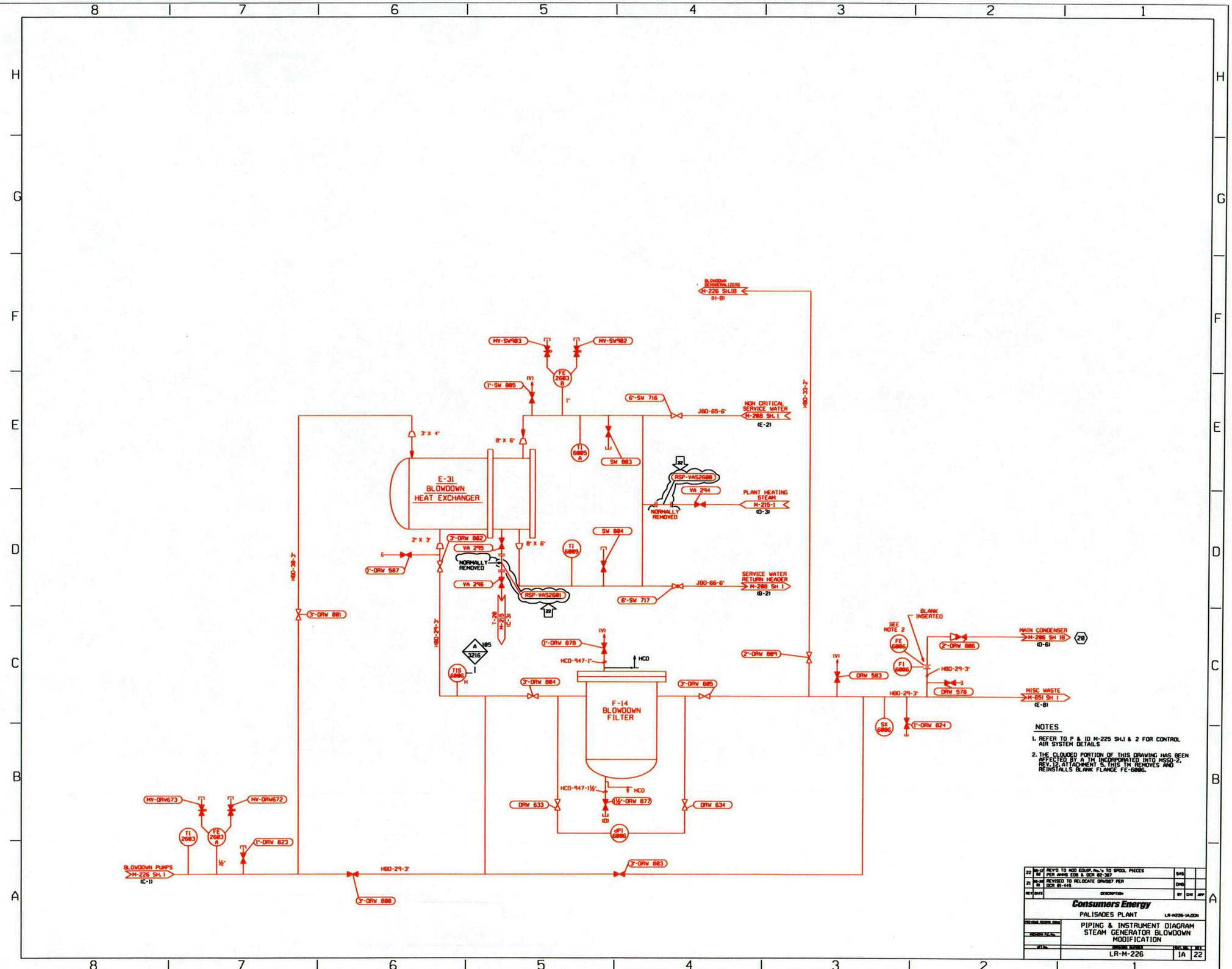

NOTES

1. REFER TO P & ID M-225 SH.1 & 2 FOR CONTROL AIR SYSTEM DETAILS
2. THE CLOUDED PORTION OF THIS DRAWING HAS BEEN AFFECTED BY A TM INCORPORATED INTO MSSD-2, REV. 12, ATTACHMENT 5. THIS TM REMOVES AND REINSTALLS BLANK FLANGE FE-6006.

REV	DATE	DESCRIPTION	BY	CHK	APP
22	06-12-02	REV'D TO ADD EQUIP. No.'s TO SPOOL PIECES PER AMMS EOB & DCR 02-367	SAS		
21	06-26-01	REVISED TO RELOCATE DRW587 PER DCR 01-445	DMB		

Consumers Energy

PALISADES PLANT LR-M226-1A.DGN

PIPING & INSTRUMENT DIAGRAM
STEAM GENERATOR BLOWDOWN
MODIFICATION

LR-M-226 | 1A | 22

RED=IN SCOPE FOR LR
BLACK=NOT IN SCOPE

...\dwgrev2-lr\LR-M226-1A.dgn 03/21/2005 02:19:25 PM

C92

COLOR TABLE-2 DRIVER-L2

THIS DRAWING IS COLOR CODED FOR LICENSE RENEWAL.

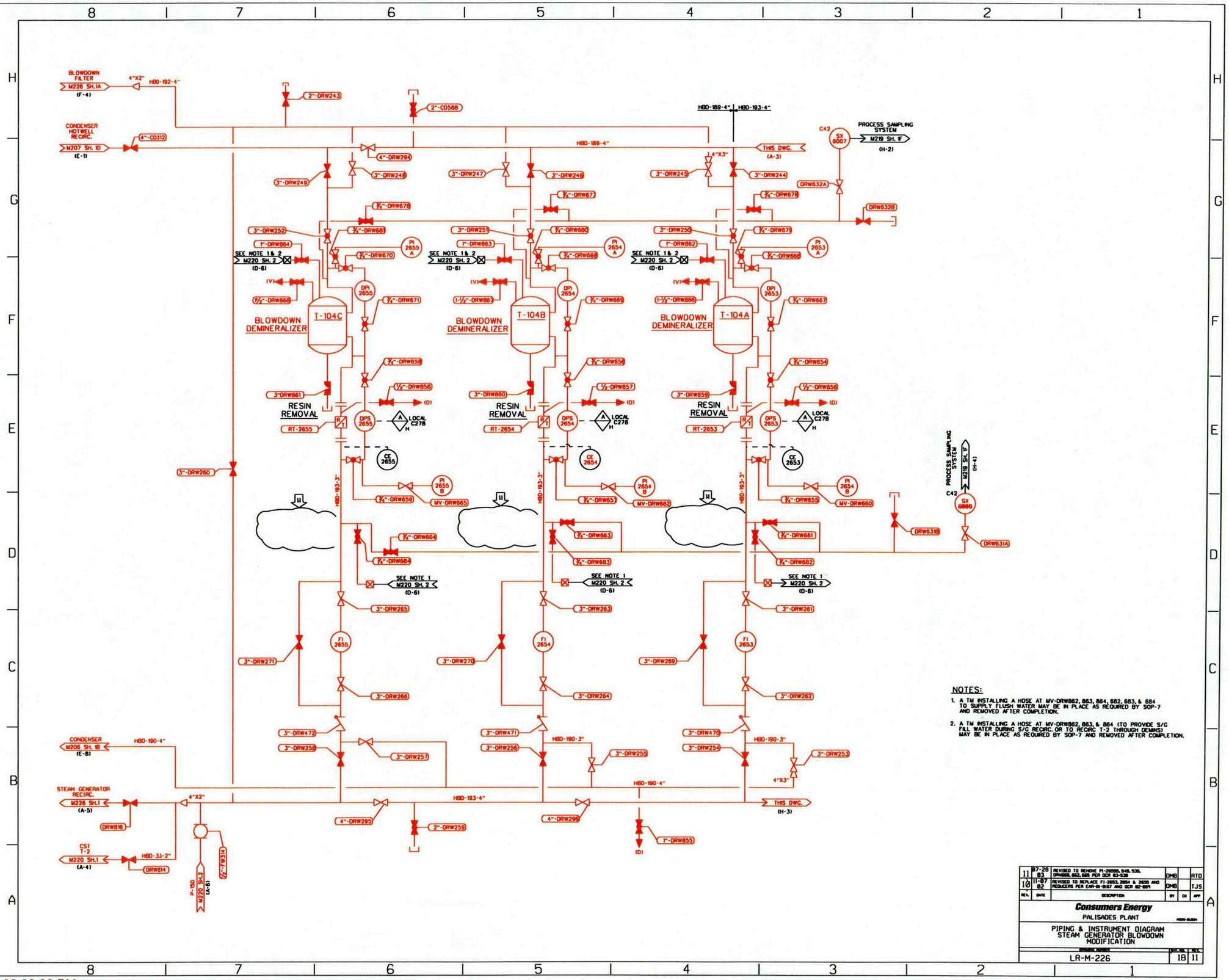

NOTES:

1. A TM INSTALLING A HOSE AT MV-DRW862, 863, 864, 682, 683, & 684 TO SUPPLY FLUSH WATER MAY BE IN PLACE AS REQUIRED BY SOP-7 AND REMOVED AFTER COMPLETION.
2. A TM INSTALLING A HOSE AT MV-DRW862, 863, & 864 (TO PROVIDE S/G FILL WATER DURING S/G RECIRC. OR TO RECIRC T-2 THROUGH DEMINS) MAY BE IN PLACE AS REQUIRED BY SOP-7 AND REMOVED AFTER COMPLETION.

REV.	DATE	DESCRIPTION	BY	CK	APP
11	07-28-03	REVISED TO REMOVE PI-2655B, 548, 538, DRW868, 662, 665 PER DCR 03-538	DMB		RTD
10	11-07-02	REVISED TO REPLACE FI-2653, 2654 & 2655 AND REDUCERS PER EAR-01-0167 AND DCR 02-009	DMB		TJS

Consumers Energy

PALISADES PLANT

PIPING & INSTRUMENT DIAGRAM
STEAM GENERATOR BLOWDOWN
MODIFICATION

DRAWING NUMBER: LR-M-226 | SHT. NO. 1B | REV. 11

RED=IN SCOPE FOR LR
BLACK=NOT IN SCOPE

...\dwgrev2-lr\LR-M226-1B.dgn 03/21/2005 02:20:22 PM

C93

COLOR TABLE-2 DRIVER-L2

THIS DRAWING IS COLOR CODED FOR LICENSE RENEWAL.

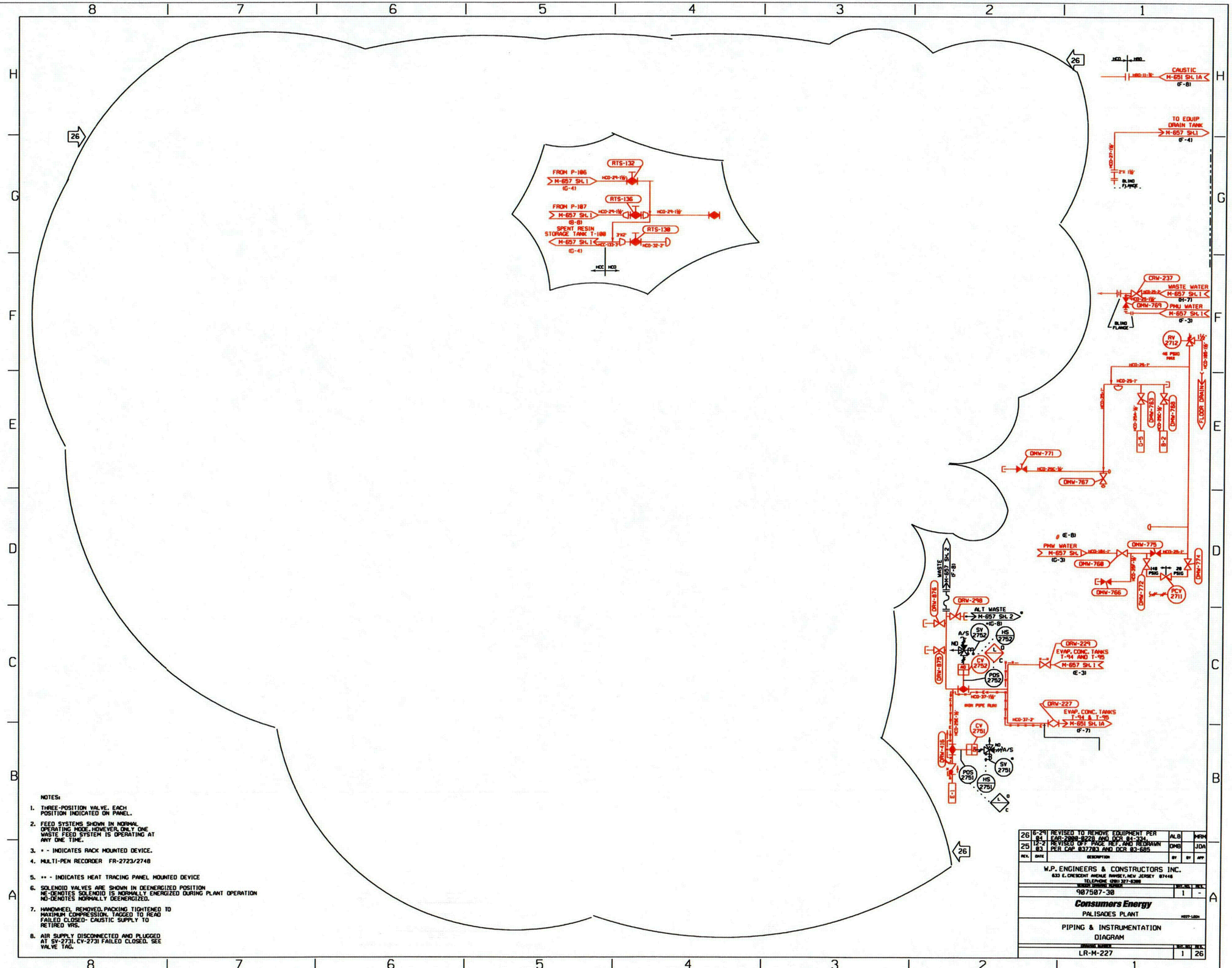

RED=IN SCOPE FOR LR
BLACK=NOT IN SCOPE

...\dwgrev2-lr\LR-M227-1.dgn 03/21/2005 02:21:06 PM

C94

COLOR TABLE-2 DRIVER-L2

THIS DRAWING IS COLOR CODED FOR LICENSE RENEWAL.

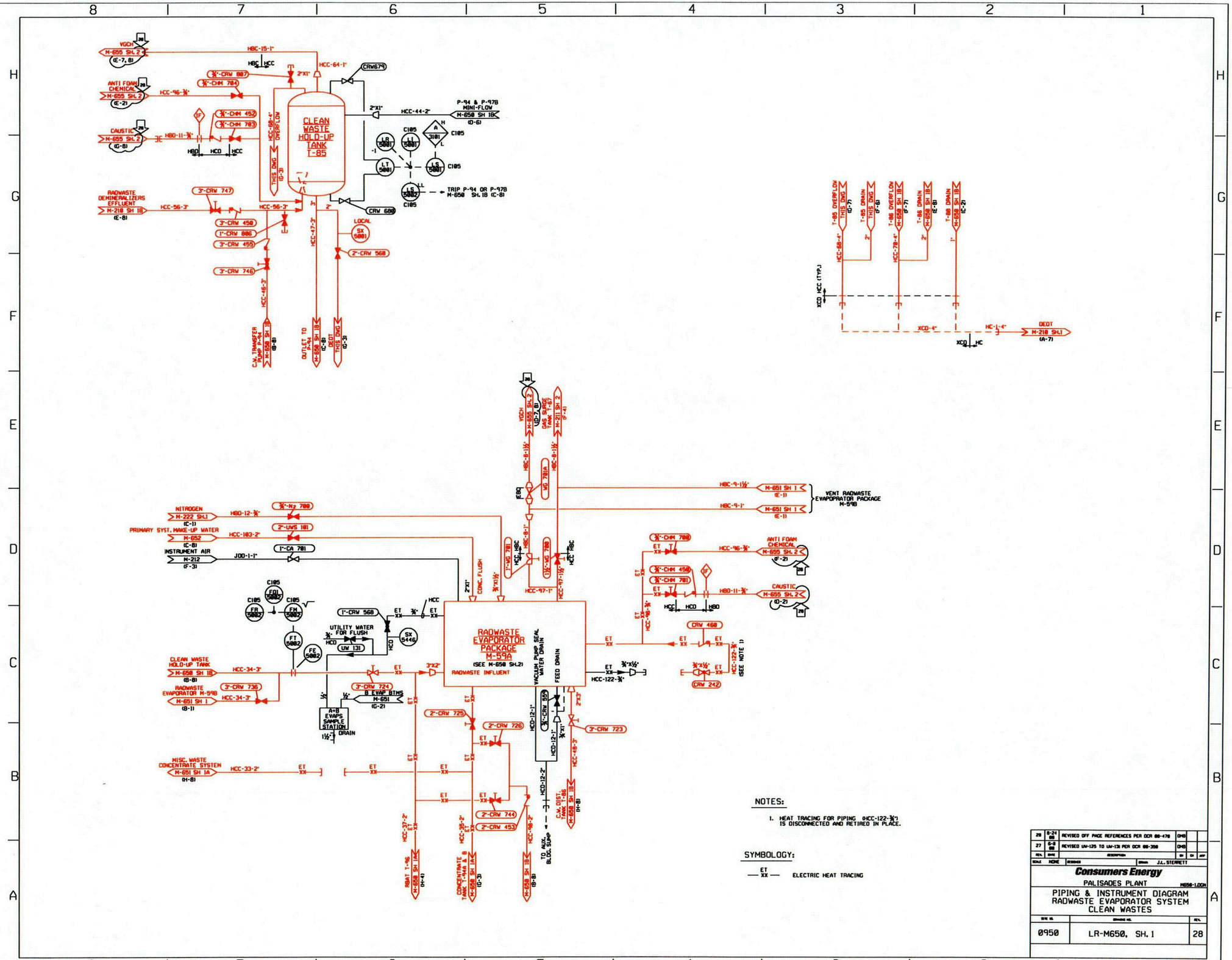

RED=IN SCOPE FOR LR
BLACK=NOT IN SCOPE

...\dwgrev2-lr\LR-M650-1.dgn 03/21/2005 02:22:50 PM

C95

COLOR TABLE-2 DRIVER-L2

THIS DRAWING IS COLOR CODED FOR LICENSE RENEWAL.

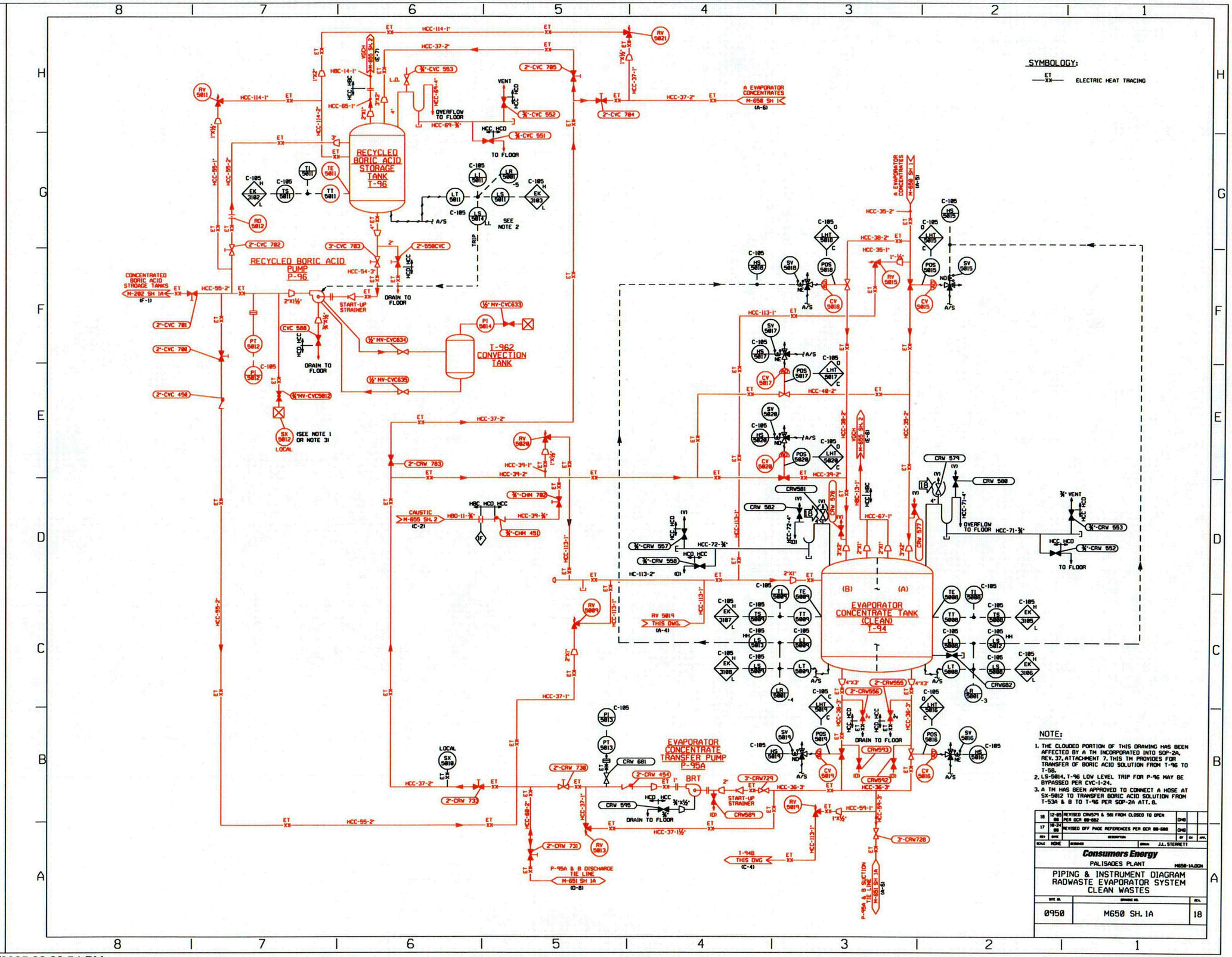

RED=IN SCOPE FOR LR
BLACK=NOT IN SCOPE

...\dwgrev2-lr\LR-M650-1A.dgn 03/21/2005 02:23:54 PM

C96

COLOR TABLE-2 DRIVER-L2

THIS DRAWING IS COLOR CODED FOR LICENSE RENEWAL.

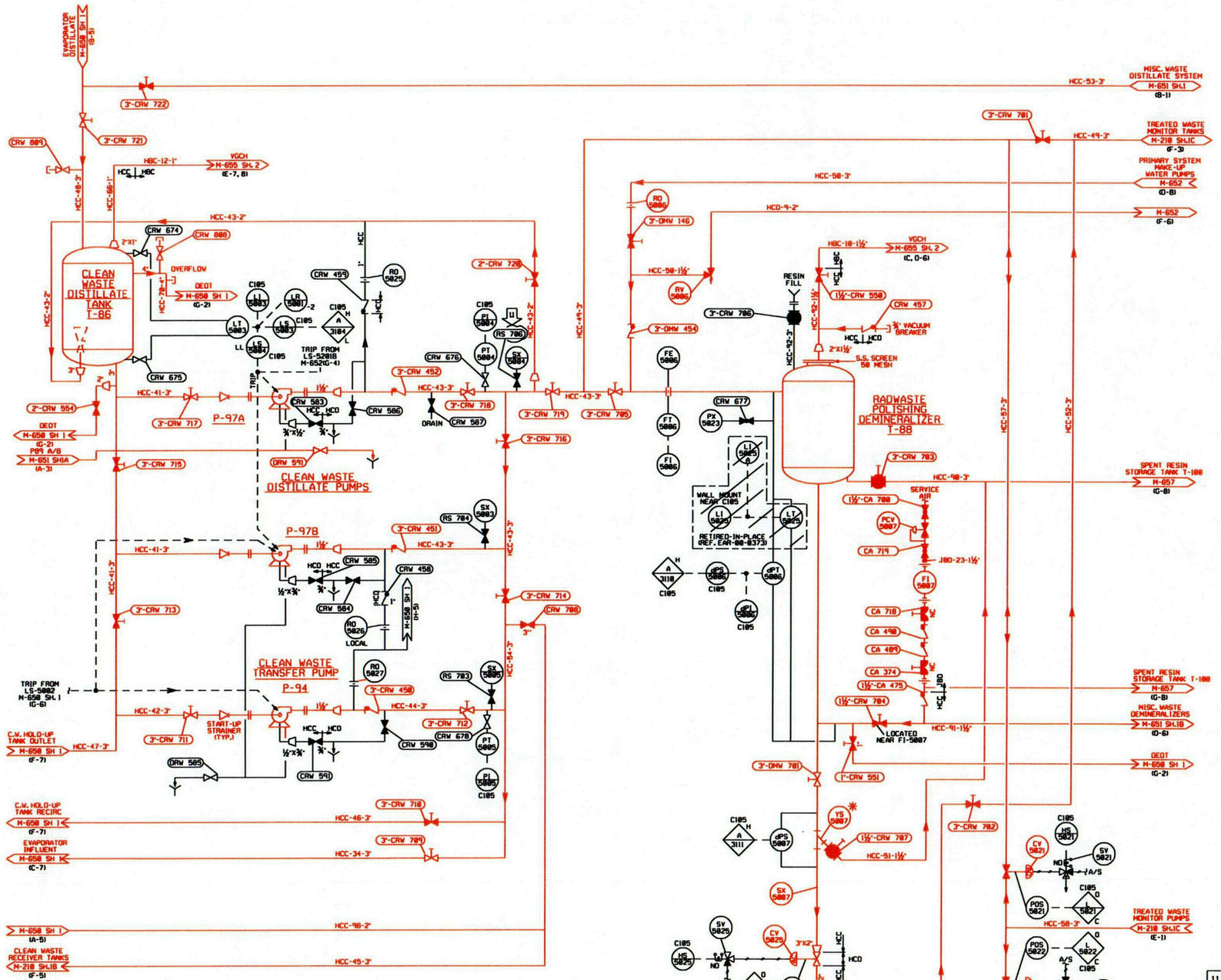

RED=IN SCOPE FOR LR

BLACK=NOT IN SCOPE

...\dwgrev2-lr\LR-M650-1B.dgn 03/21/2005 02:24:56 PM

C97

COLOR TABLE-2 DRIVER-L2

THIS DRAWING IS COLOR CODED FOR LICENSE RENEWAL.

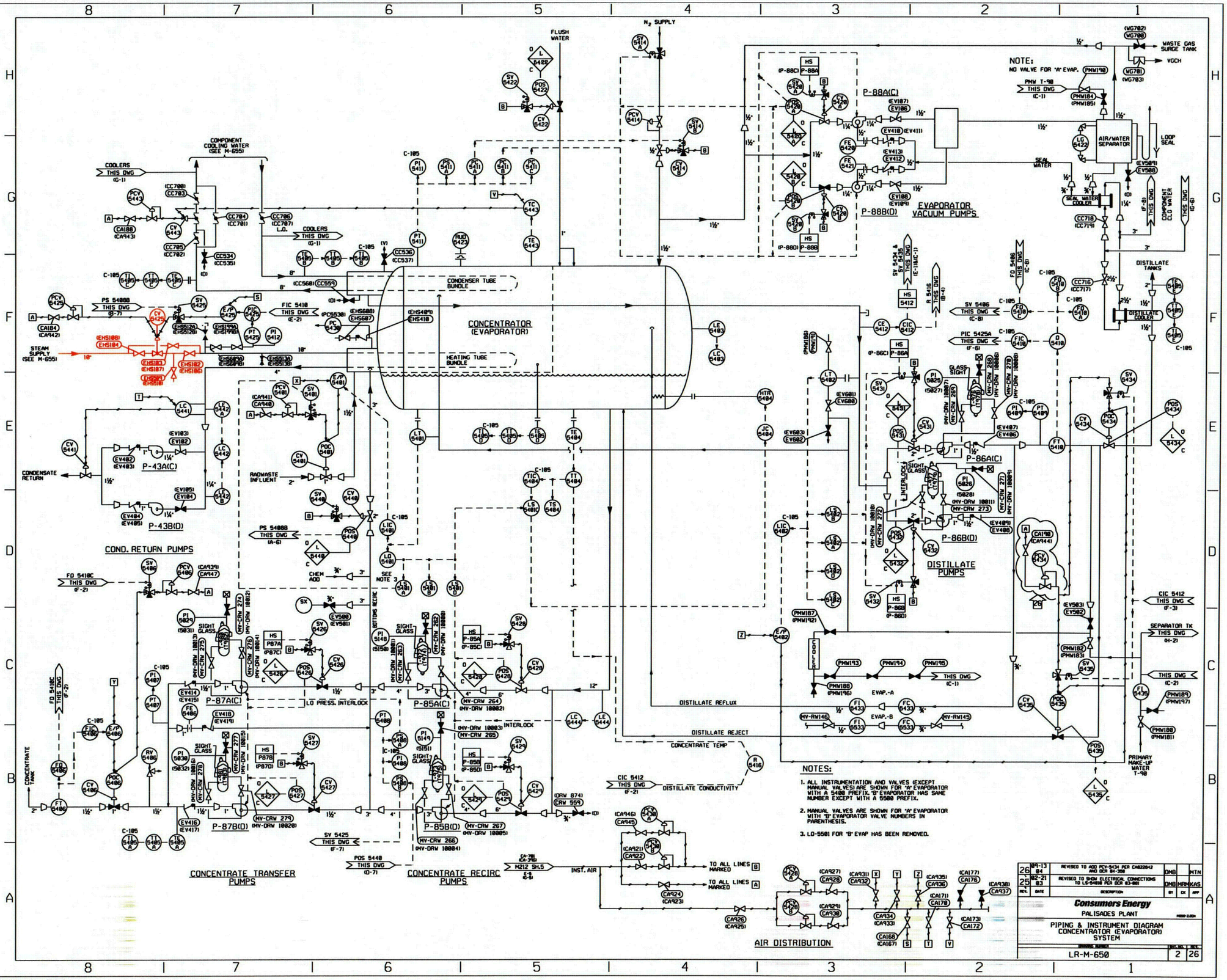

RED=IN SCOPE FOR LR
BLACK=NOT IN SCOPE

...\dwgrev2-lr\LR-M650-2.dgn 03/21/2005 02:25:45 PM

C98

COLOR TABLE-1 DRIVER-L

THIS DRAWING IS COLOR CODED FOR LICENSE RENEWAL.

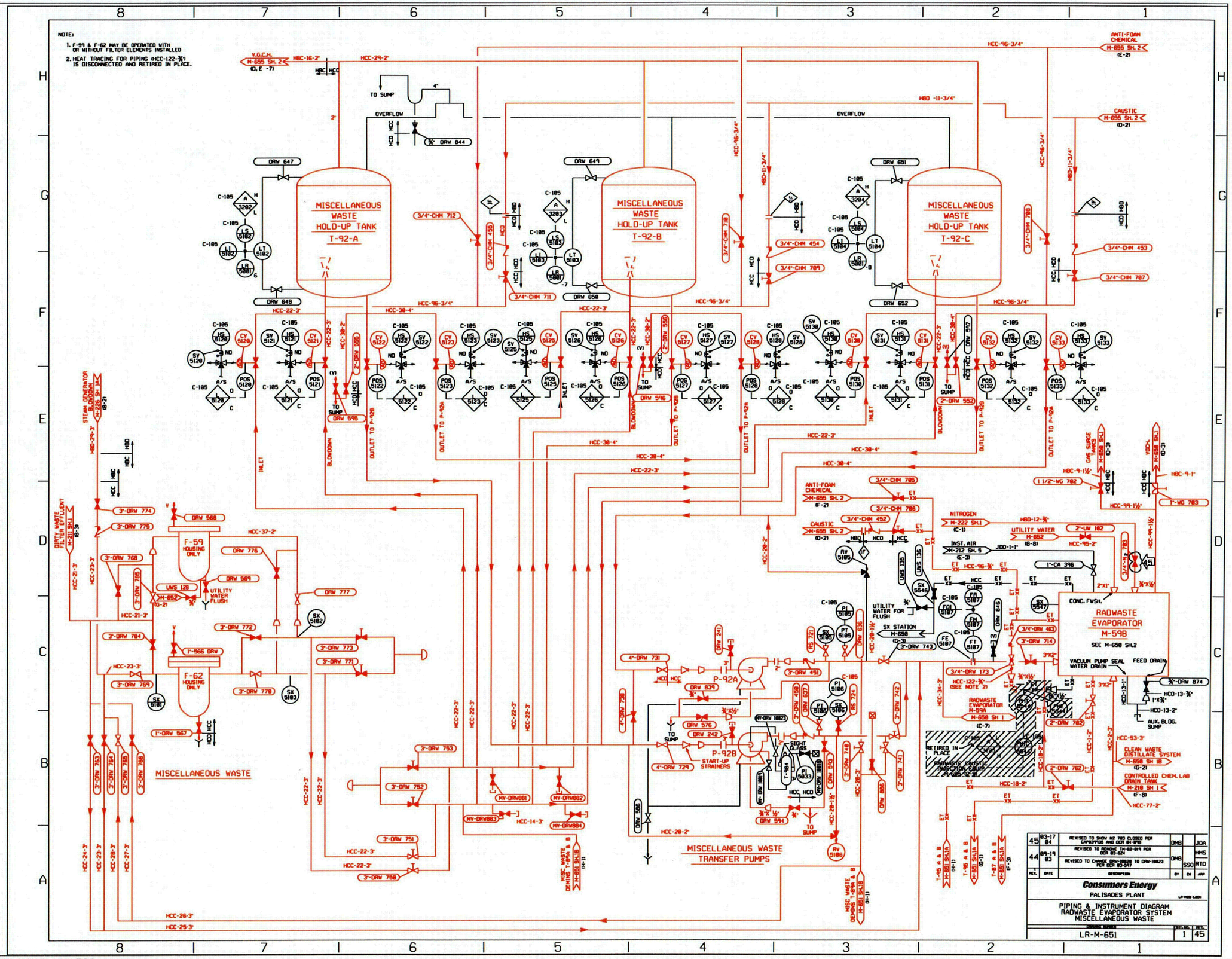

RED=IN SCOPE FOR LR
BLACK=NOT IN SCOPE

...\dwgrev2-lr\LR-M651-1.dgn 03/21/2005 02:27:16 PM

C99

COLOR TABLE-2 DRIVER-2

THIS DRAWING IS COLOR CODED FOR LICENSE RENEWAL.

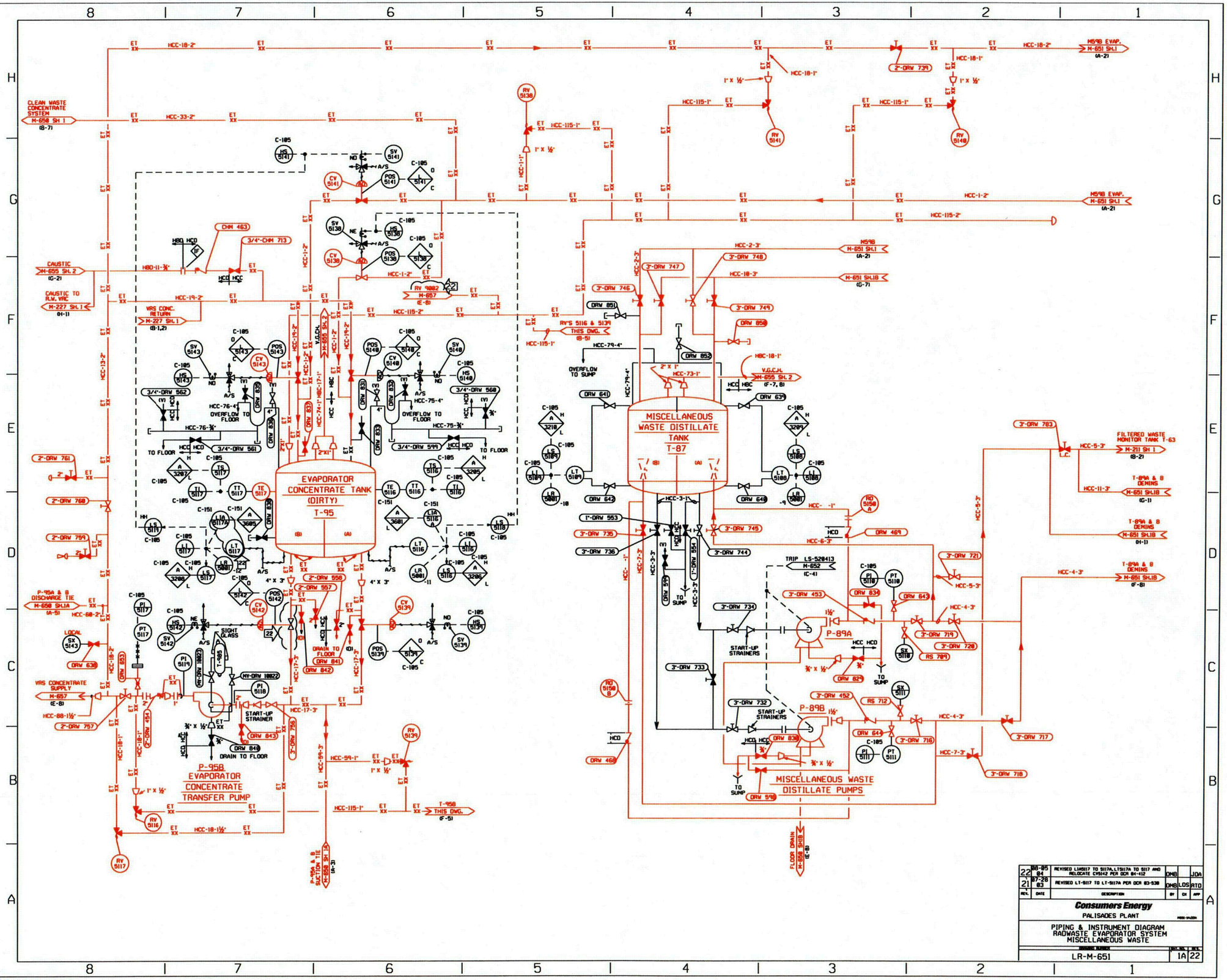

RED=IN SCOPE FOR LR
BLACK=NOT IN SCOPE

...\dwgrev2-lr\LR-M651-1A.dgn 03/21/2005 02:30:34 PM

C100

COLOR TABLE-2 DRIVER-L2

THIS DRAWING IS COLOR CODED FOR LICENSE RENEWAL.

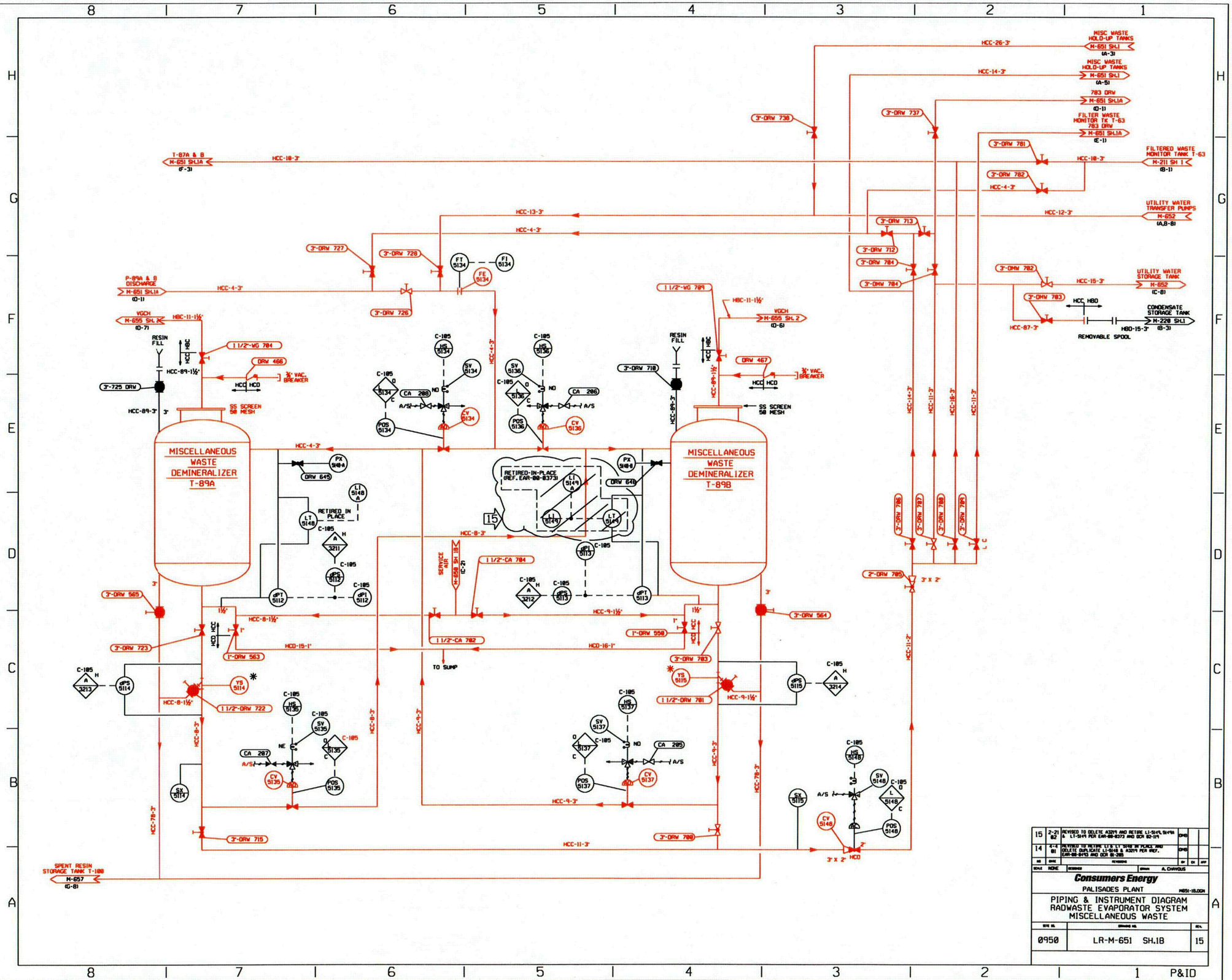

RED=IN SCOPE FOR LR
BLACK=NOT IN SCOPE

...\dwgrev2-lr\LR-M651-1B.dgn 03/21/2005 02:31:12 PM

C101

COLOR TABLE-I DRIVER-L

THIS DRAWING IS COLOR CODED FOR LICENSE RENEWAL.

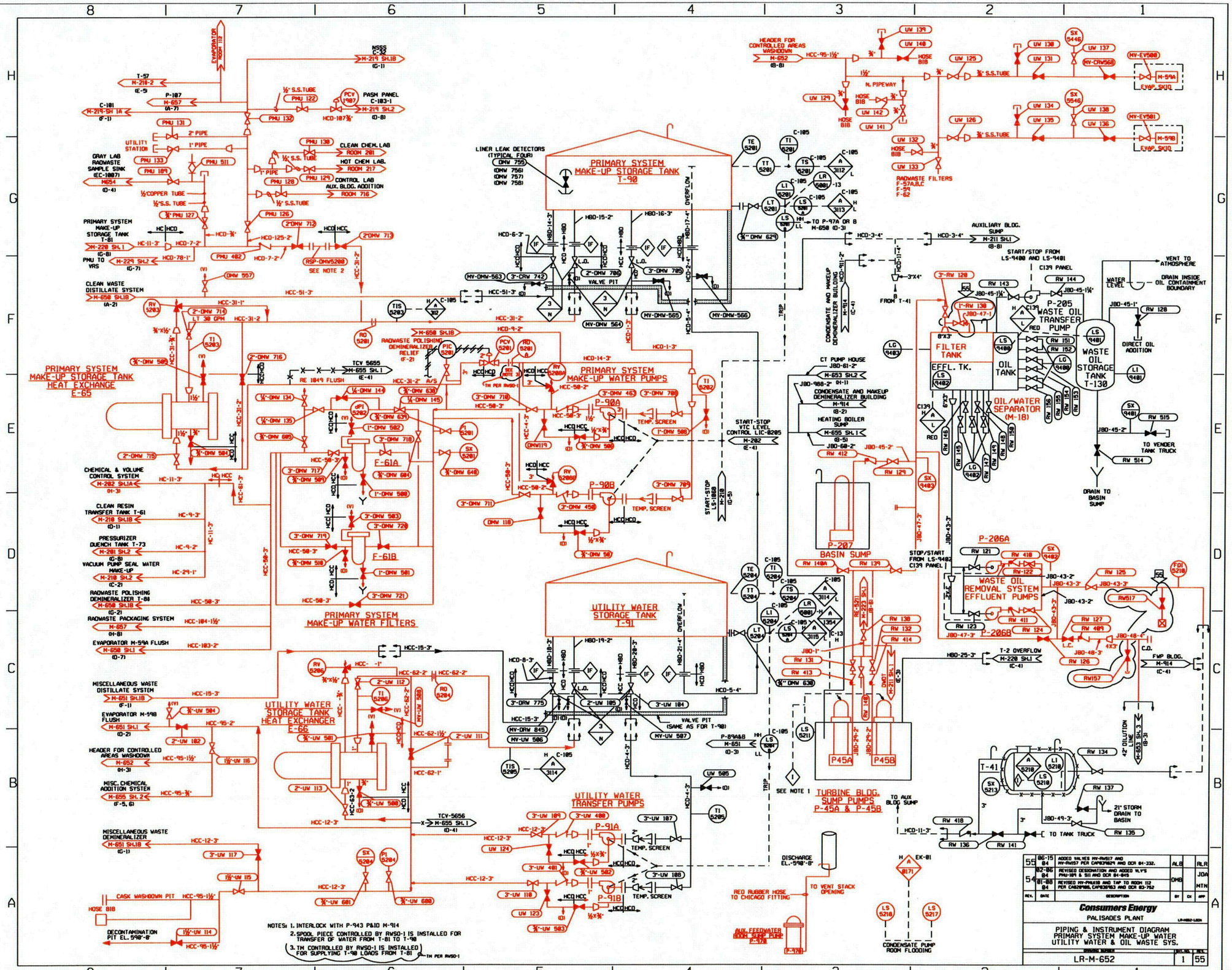

RED=IN SCOPE FOR LR
BLACK=NOT IN SCOPE

...\dwgrev2-lr\LR-M652-1.dgn 03/21/2005 02:31:52 PM

C102

COLOR TABLE-2 DRIVER-L2

THIS DRAWING IS COLOR CODED FOR LICENSE RENEWAL.

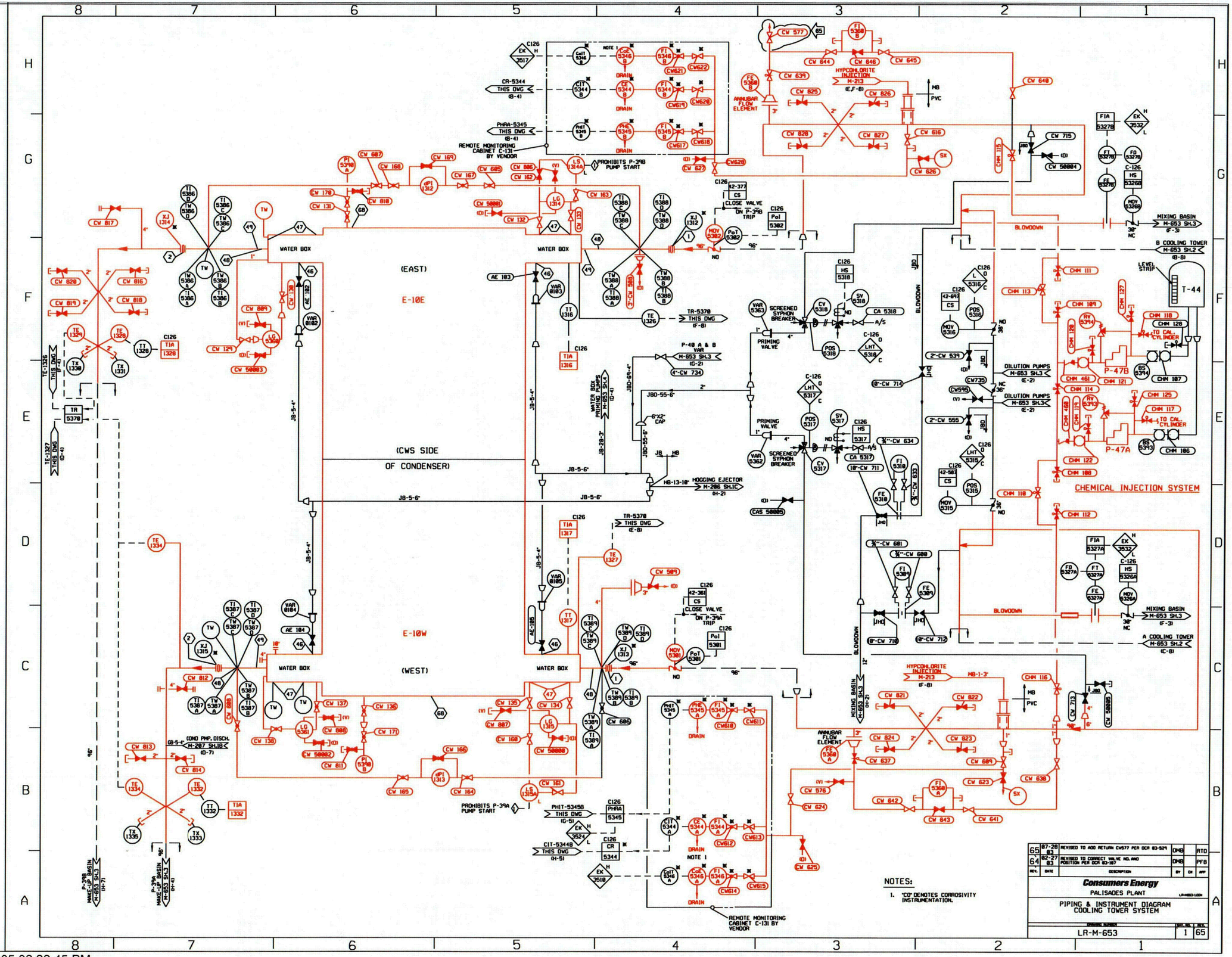

RED=IN SCOPE FOR LR
BLACK=NOT IN SCOPE

...\dwgrev2-lr\LR-M653-1.dgn 03/21/2005 02:32:45 PM

C103

COLOR TABLE-2 DRIVER-L2

THIS DRAWING IS COLOR CODED FOR LICENSE RENEWAL.

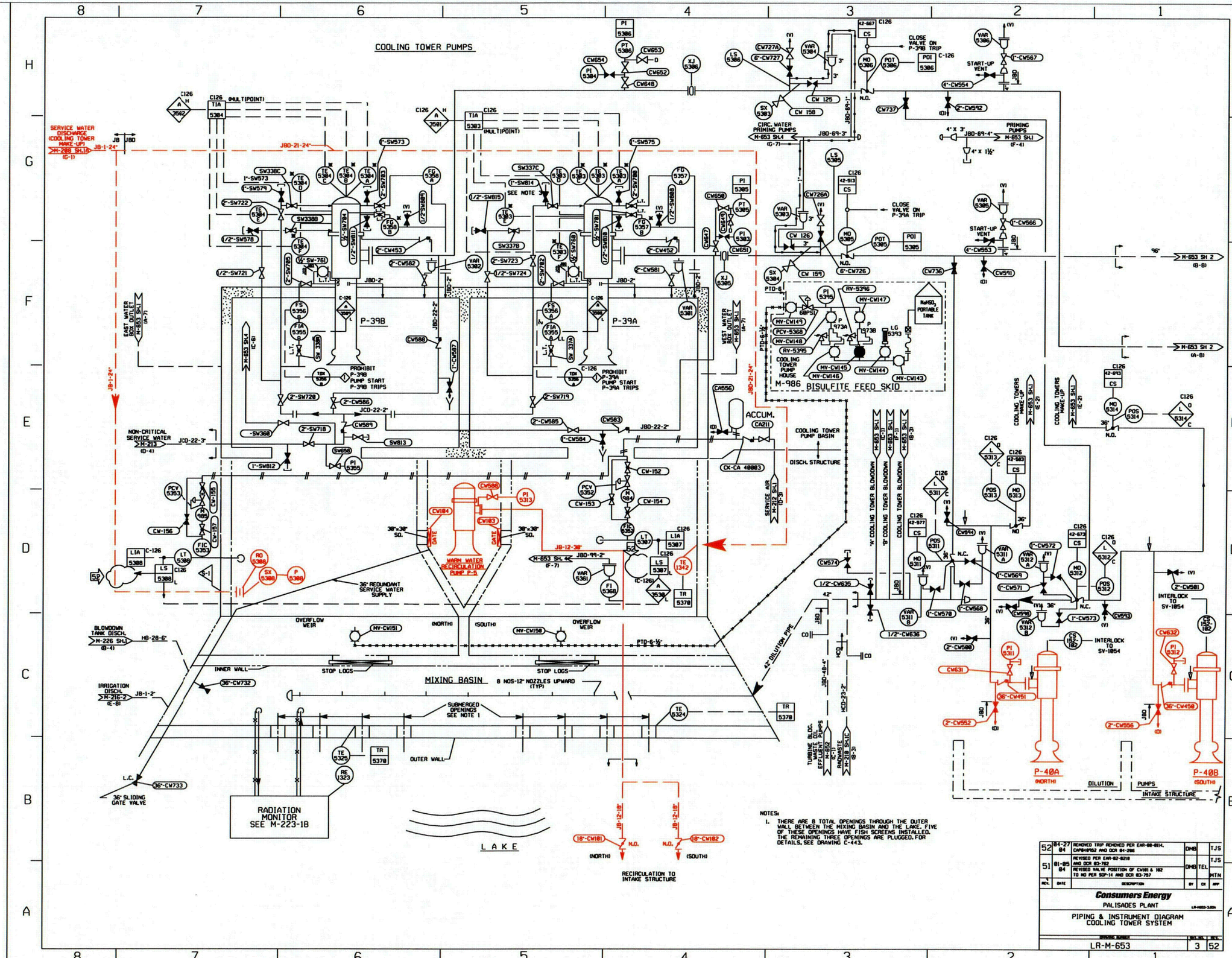

RED=IN SCOPE FOR LR
BLACK=NOT IN SCOPE

...\dwgrev2-lr\LR-M653-3.dgn 03/21/2005 02:33:30 PM

G104

COLOR TABLE-2 DRIVER-L2

THIS DRAWING IS COLOR CODED FOR LICENSE RENEWAL.

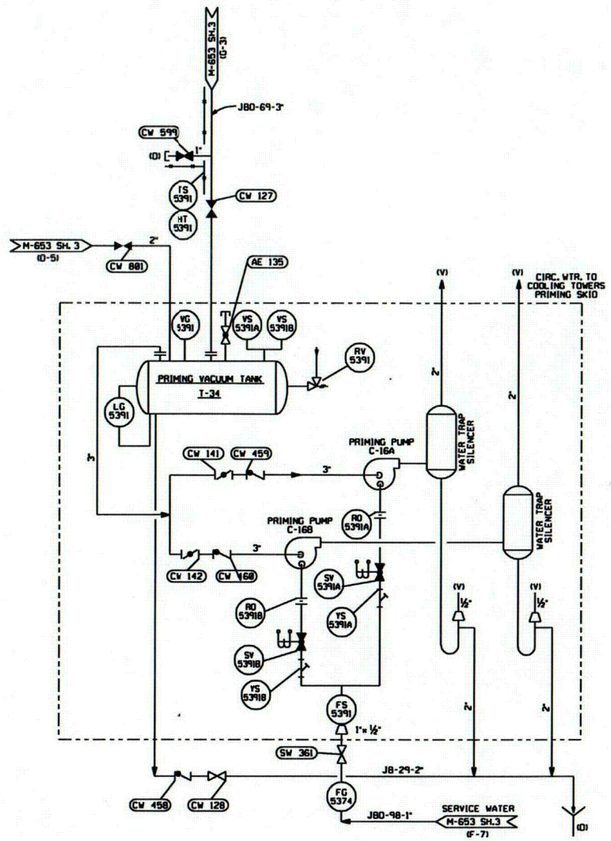

CIRC. WATER TO COOLING TOWERS PRIMING SYSTEM

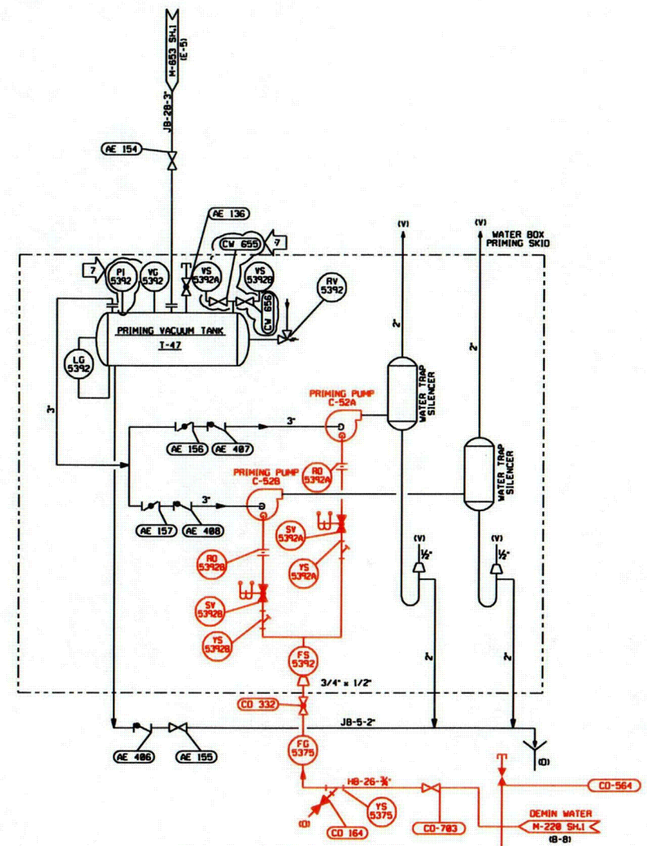

CONDENSER WATER BOX PRIMING SYSTEM

REV.	DATE	DESCRIPTION	BY	CK	APP
7	07-28-03	REVISED TO ADD CW 659, 656 AND PI-5392 PER DCR 03-529	DMB		RTD
6	06-06-97	REVISED CW127 TO CLOSED GATE VALVE PER CL-14 AND DCR 97-718.	MDS		

Consumers Energy

PALISADES PLANT

PIPING & INSTRUMENT DIAGRAM
COOLING TOWER SYSTEM

DRAWING NUMBER: LR-M-653 | SHT. NO.: 4 | REV.: 7

P&ID

RED=IN SCOPE FOR LR
BLACK=NOT IN SCOPE

...\dwgrev2-lr\LR-M653-4.dgn 03/21/2005 02:34:24 PM

5/05

COLOR TABLE-2 DRIVER-L2

THIS DRAWING IS COLOR CODED FOR LICENSE RENEWAL.

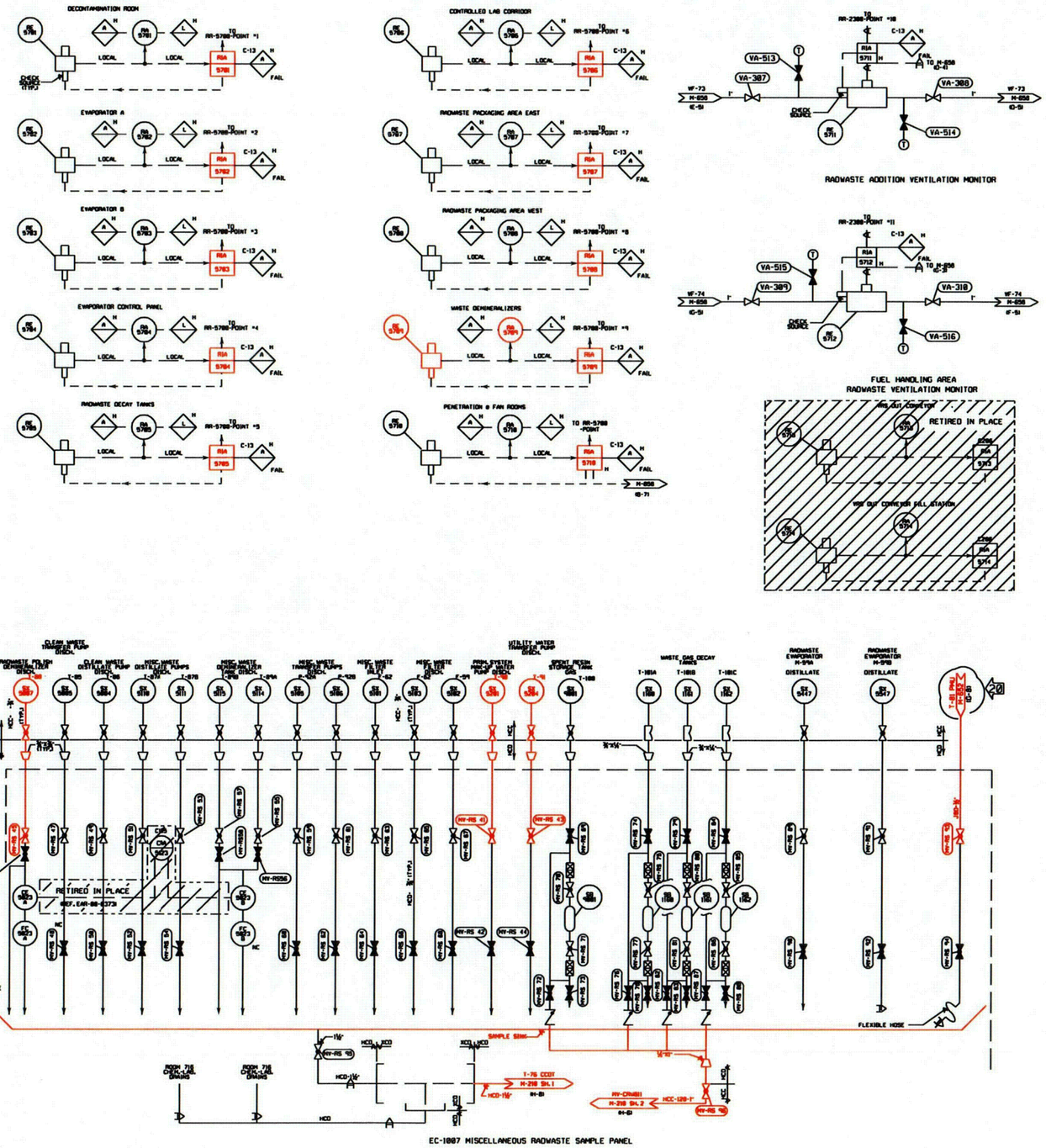

REV.	DATE	DESCRIPTION	BY	CK	APP
20	02-18 04	REVISED PAGE DESIGNATOR PER DCR 04-045	DMB		JDA
19	2-21 02	REVISED TO RETIRE CM5823 PER EAR-00-0373 AND DCR 02-119	DMB	SAS	RMB

Consumers Energy

PALISADES PLANT

RADWASTE ADDITION RADIATION MONITORING AND SAMPLING SYSTEMS

DRAWING NUMBER LR-M-654 REV. NO. - REV. 20

RED=IN SCOPE FOR LR

BLACK=NOT IN SCOPE

...\dwgrev2-lr\LR-M654.dgn 03/21/2005 02:35:43 PM

C106

COLOR TABLE-2 DRIVER-L2

THIS DRAWING IS COLOR CODED FOR LICENSE RENEWAL.

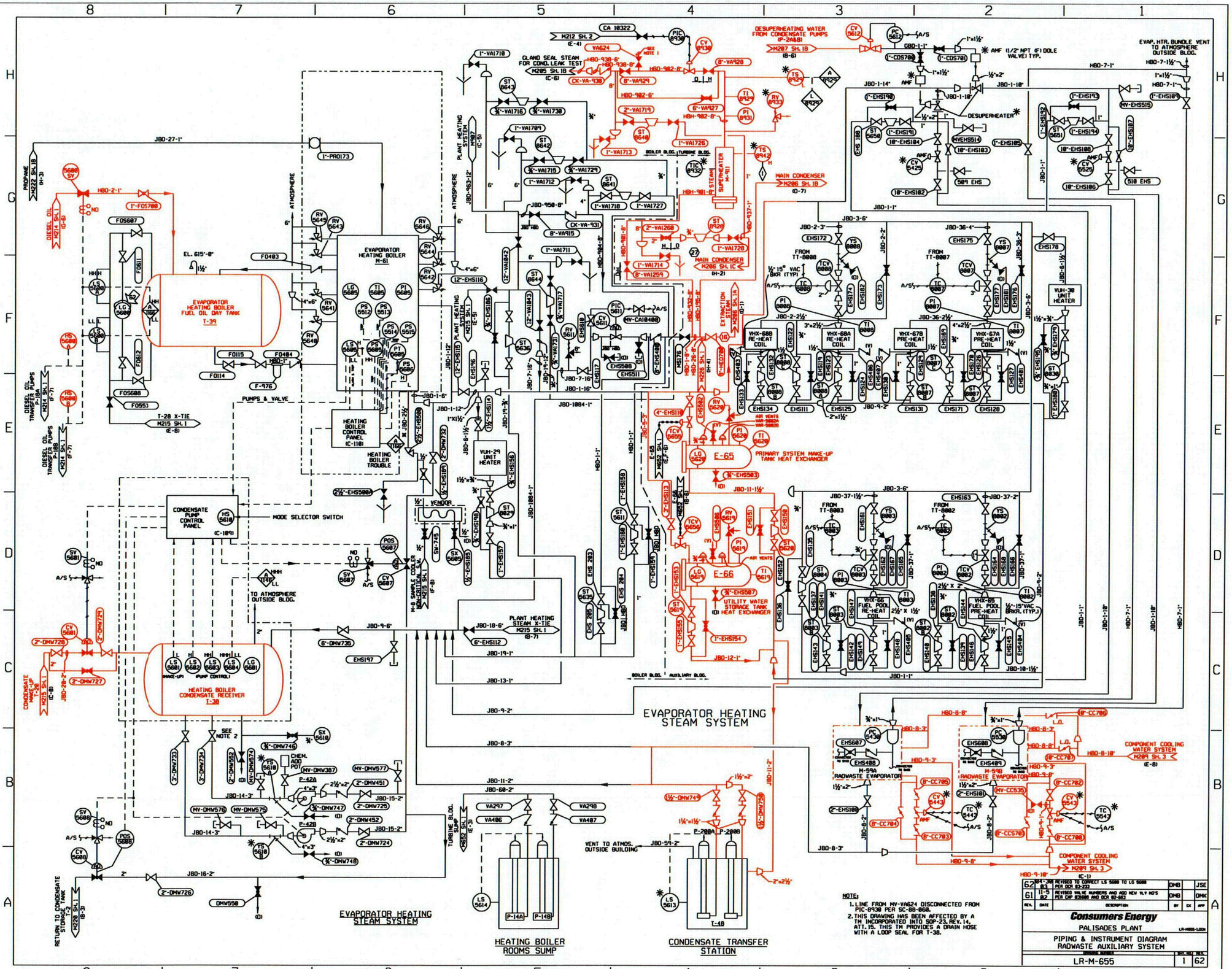

RED=IN SCOPE FOR LR
BLACK=NOT IN SCOPE

...\dwgrev2-lr\LR-M655-1.dgn 03/21/2005 02:37:08 PM

C107

COLOR TABLE-2 DRIVER-L2

THIS DRAWING IS COLOR CODED FOR LICENSE RENEWAL.

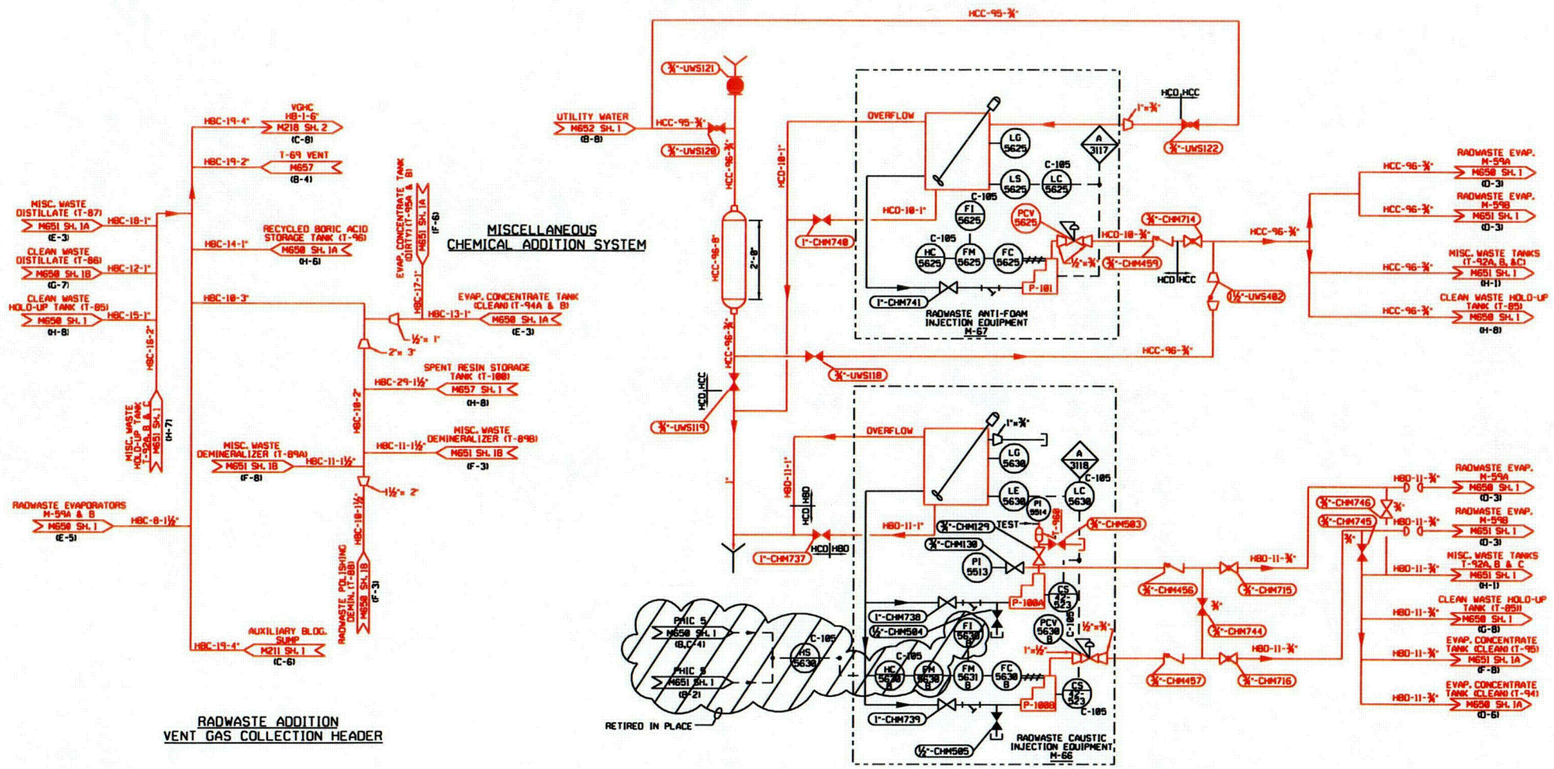

REV.	DATE	DESCRIPTION	BY	CK	APP
0	8-16-00	ISSUED NEW AND SEPERATED FROM M-655 REV 54 PER DCR 00-554	JGO		

Consumers Energy

PALISADES PLANT

PIPING & INSTRUMENT DIAGRAM
RADWASTE AUXILIARY SYSTEMS

DRAWING NUMBER: LR-M655 — SHT. | REV.: 2 | 0

RED=IN SCOPE FOR LR
BLACK=NOT IN SCOPE

...\dwgrev2-lr\LR-M655-2.dgn 03/21/2005 02:38:24 PM

C108

COLOR TABLE-4 DRIVER-L4

THIS DRAWING IS COLOR CODED FOR LICENSE RENEWAL.

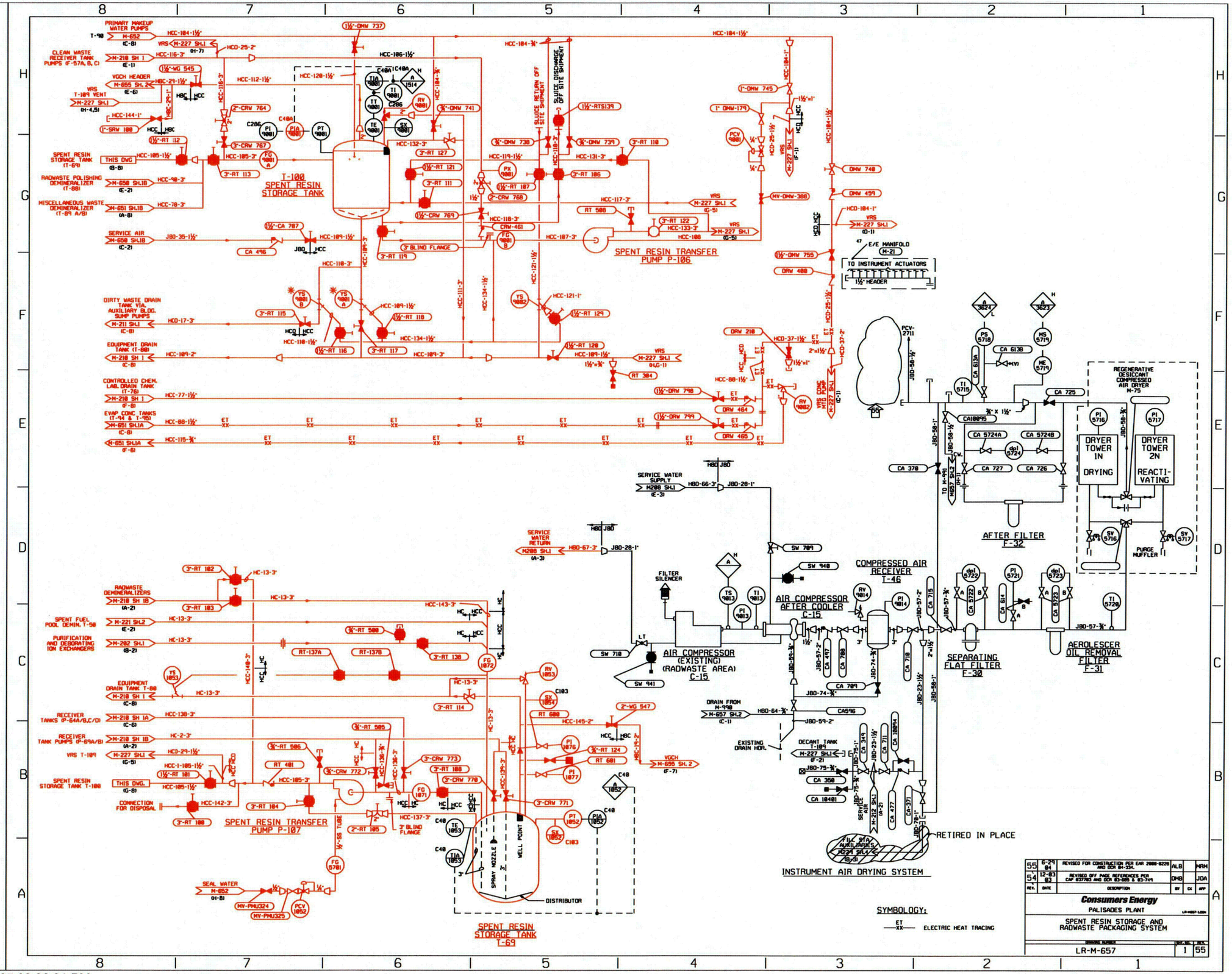

RED=IN SCOPE FOR LR
BLACK=NOT IN SCOPE

...\dwgrev2-lr\LR-M657-1.dgn 03/21/2005 03:06:31 PM

C109

COLOR TABLE-4 DRIVER-L4

THIS DRAWING IS COLOR CODED FOR LICENSE RENEWAL.

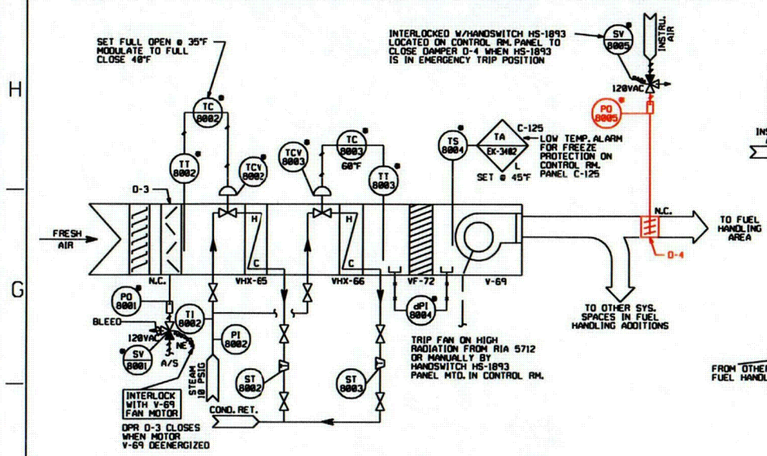

AUX. BLDG. ADD. FUEL HANDLING SUPPLY AIR CONTROL

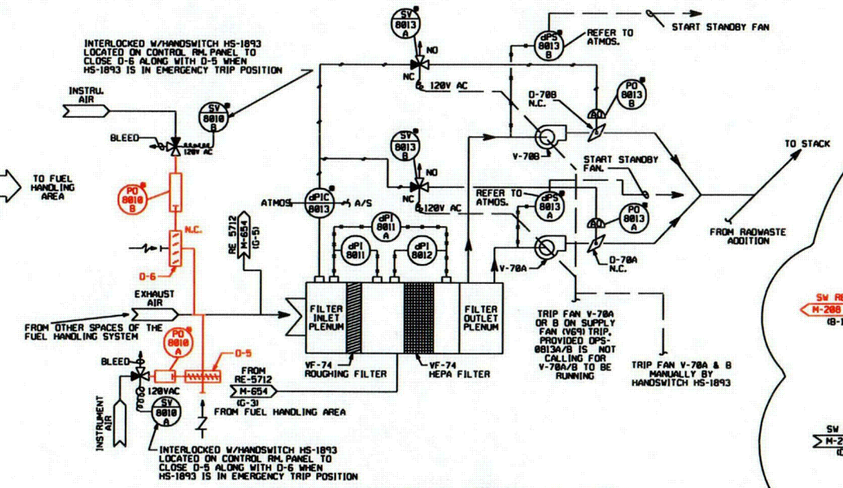

AUX. BLDG. ADDITION FUEL HANDLING EXH. AIR CONTROL

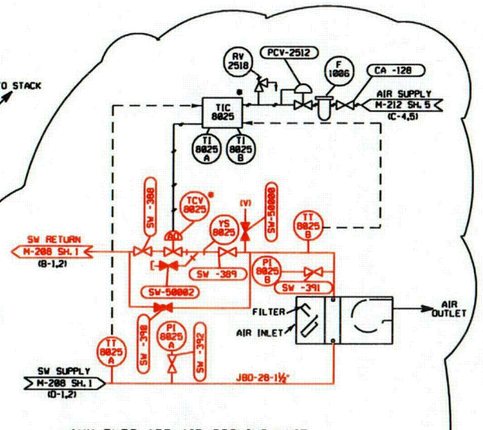

AUX. BLDG. ADD. AIR COOLING UNIT V-75

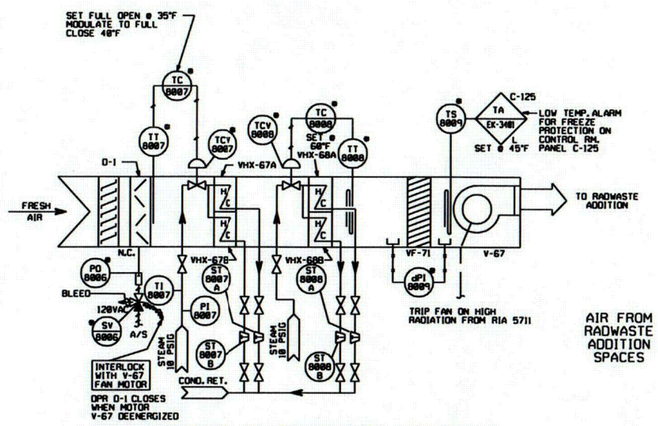

AUX. BLDG. ADD. RADWASTE SUPPLY AIR CONTROL

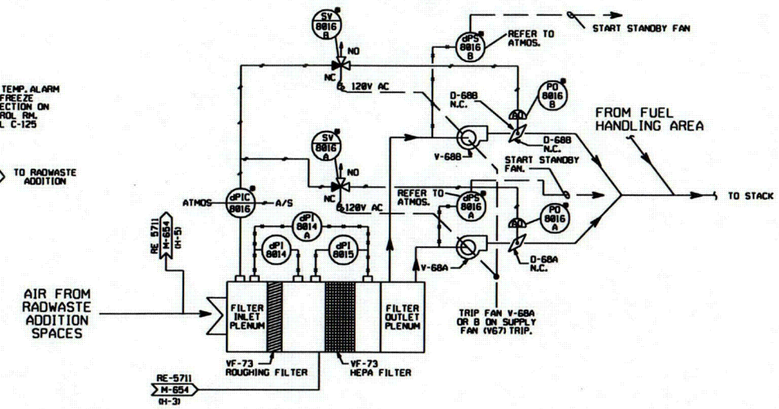

AUX. BLDG. ADDITION RADWASTE EXH. AIR CONTROL

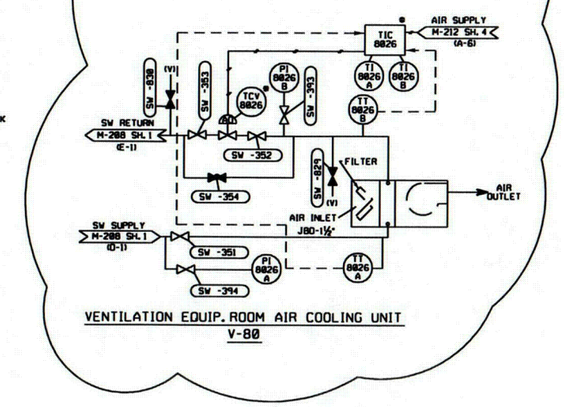

VENTILATION EQUIP. ROOM AIR COOLING UNIT V-80

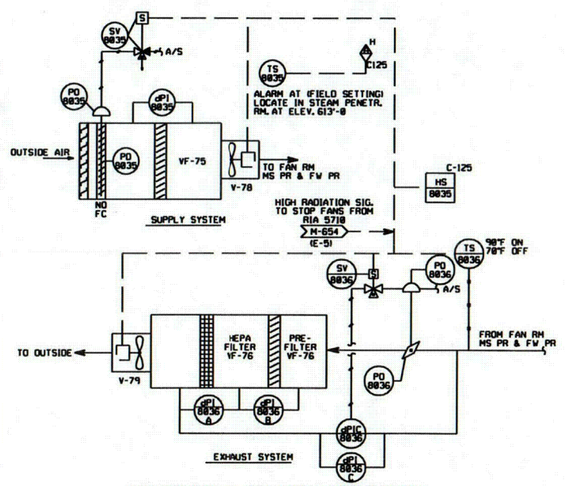

PENETRATION & FAN ROOMS H&V CONTROL

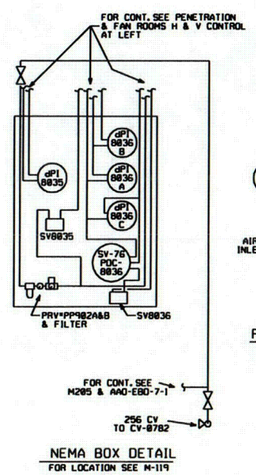

NEMA BOX DETAIL
FOR LOCATION SEE M-119

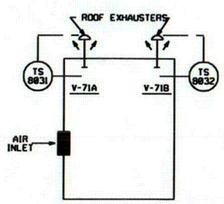

NEW BOILER ROOM ROOF EXHAUSTER CONTROL

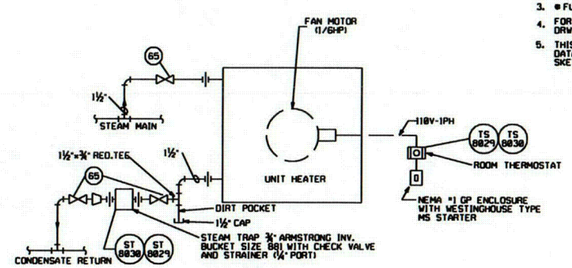

TYPICAL UNIT HEATER DETAILS
AUX. BLDG. ADD. H&V EQUIP. RM. UNIT VUH-30
NEW BOILER RM UNIT VUH-29

NOTES

1. FOR PIPING & INSTRUMENT DIAGRAM LEGEND SEE DRWG.M-208
2. FOR CONTROL SWITCH HS-1893.3-WAY SOLENOID VALVE SV-1893 AND EXISTING FUEL HANDLING EXHAUST SYSTEM CBR FILTER BY-PASS AND STRAIGHT-THROUGH CONTROL DAMPERS SEE P&ID DRWG. M-218
3. ● FURNISHED BY CONTROL VENDOR
4. FOR EXISTING FACILITY H&V CONTROLS SEE DRWGS. M-218 AND M-130
5. THIS DRWG. CONSOLIDATES INSTRUMENT & CONTROL DATA SHOWN ON SPECIFICATION M-358 ATTACHMENT SKETCHES SK-1 THRU SK-7 WITHOUT CHANGE

REV	DATE	DESCRIPTION	BY	CK	APP
19	09-24-82	REVISED TO REDRAW VENTILATION EQUIP. ROOM COMPONENTS & AUX BLDG ADD AIR PER DCR 82-568	CHG		CHG
18	07-12-82	REVISED ADD ALARM WINDOW NUMBERS FOR TS-8809 & TS-8884 PER EAR-2886-8809 & DCR-82-513	SAS		TJS

SCALE NONE — DRAWN — DRWN R.M. SATTERELLI

Consumers Energy
PALISADES PLANT

PIPING & INSTRUMENT DIAGRAM
HEATING, VENTILATING AND COOLING
AUXILIARY BUILDING ADDITION

DWG. NO.	DRAWING NO.	REV.
0950	LR-M-658 SH. 1	19

LR-M658-1.DGN

RED=IN SCOPE FOR LR
BLACK=NOT IN SCOPE

...\dwgrev2-lr\LR-M658-1.dgn 03/21/2005 03:07:36 PM

C110

COLOR TABLE-2 DRIVER-L2

THIS DRAWING IS COLOR CODED FOR LICENSE RENEWAL.

NOTES:

A. YS 8260C IS USED TO TRANSFER FO VIA TEMP PUMP AND HOSES TO T-25A/B FOR "APPENDIX R" SAFE SHUTDOWN PER SOP-22 ATTACHMENT 4.

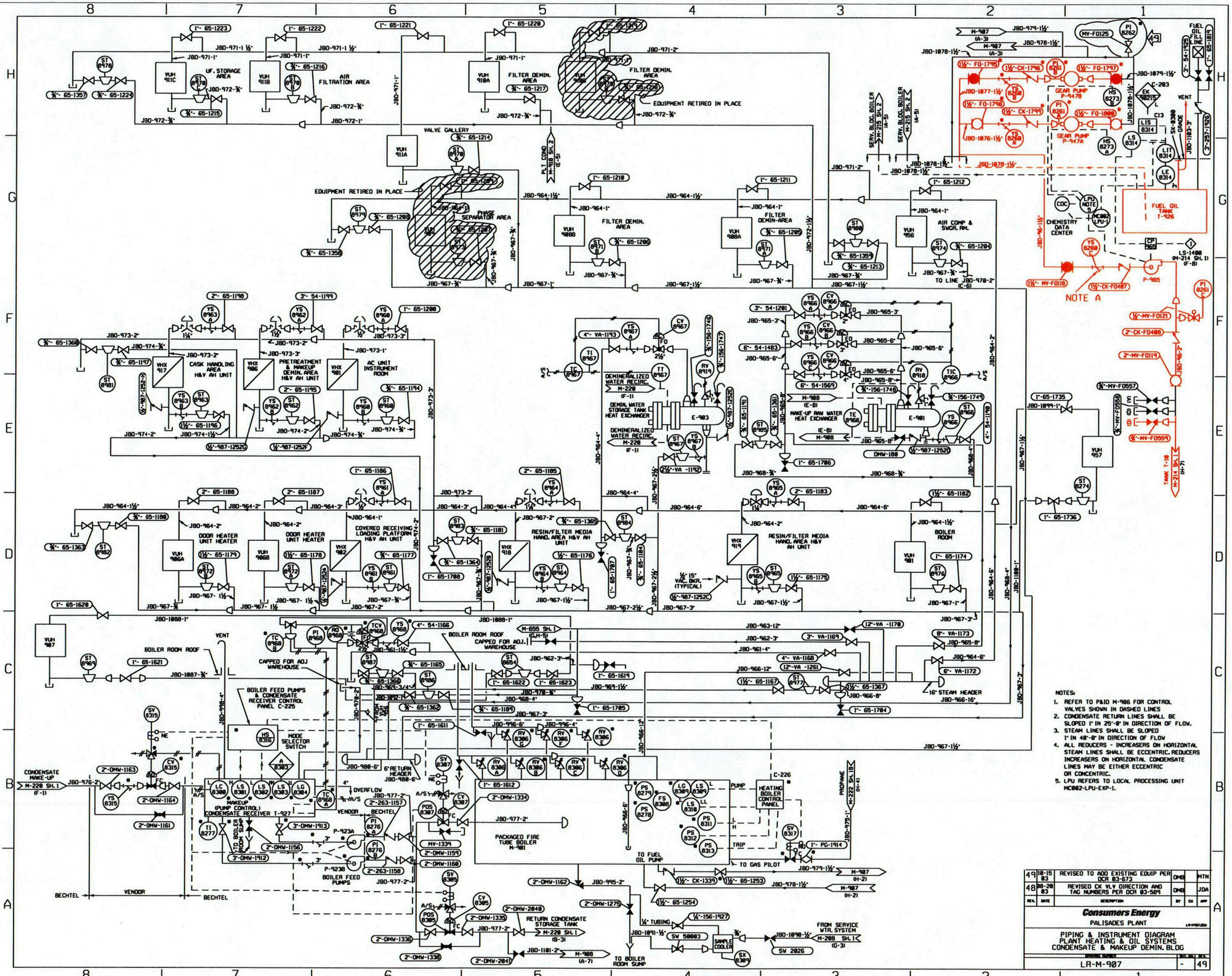

NOTES:

1. REFER TO P&ID M-986 FOR CONTROL VALVES SHOWN IN DASHED LINES
2. CONDENSATE RETURN LINES SHALL BE SLOPED 1" IN 25'-0" IN DIRECTION OF FLOW.
3. STEAM LINES SHALL BE SLOPED 1" IN 40'-0" IN DIRECTION OF FLOW
4. ALL REDUCERS - INCREASERS ON HORIZONTAL STEAM LINES SHALL BE ECCENTRIC. REDUCERS INCREASERS ON HORIZONTAL CONDENSATE LINES MAY BE EITHER ECCENTRIC OR CONCENTRIC.
5. LPU REFERS TO LOCAL PROCESSING UNIT MC002-LPU-EXP-1.

REV.	DATE	DESCRIPTION	BY	CK	APP
49	10-15-03	REVISED TO ADD EXISTING EQUIP PER DCR 03-673	DMB		MTN
48	08-20-03	REVISED CK VLV DIRECTION AND TAG NUMBERS PER DCR 03-589	DMB		JDA

Consumers Energy

PALISADES PLANT

PIPING & INSTRUMENT DIAGRAM
PLANT HEATING & OIL SYSTEMS
CONDENSATE & MAKEUP DEMIN. BLDG

DRAWING NUMBER: LR-M-907 — SHT. NO. - REV. 49

RED=IN SCOPE FOR LR
BLACK=NOT IN SCOPE

...\dwgrev2-lr\LR-M907.dgn 03/21/2005 02:42:21 PM

C11

VALVE SYMBOLS

- GATE (NORMALLY OPEN)
- GATE (NORMALLY CLOSED)
- LO — LOCKED OPEN
- LC — LOCKED CLOSE
- GLOBE (NORMALLY OPEN)
- GLOBE (NORMALLY CLOSED)
- MANUAL REMOTE OPERATED
- NEEDLE (PARTIALLY OPEN)
- NEEDLE
- STOP CHECK
- CHECK
- CHECK VALVE, SPRING
- BUTTERFLY
- CLAPPER VALVE
- PLUG
- DIAPHRAGM (SAUNDERS OR CRANE TYPE)
- ANGLE
- AUTOMATIC AIR VENT VALVE
- THREE WAY (SELECTOR)
- SAUNDERS VALVE
- BALL VALVE
- VALVE WITH BY-PASS
- FLOW CHECK
- 32 — BTV TEST VALVE (MANUAL - SPRING RETURN TO CLOSE)

MISCELLANEOUS

- CONTAINMENT PENETRATION NUMBER
- FURNISHED BY COMBUSTION ENGINEERING
- FURNISHED WITH ASSOCIATED EQUIPMENT
- (W) WESTINGHOUSE PIPING
- (1) DESIGNATION FOR NOZZLE ON CONDENSER
- (1) TURBINE MFR'S DESIGNATION FOR PURCHASER'S CONNECTION
- VERT SQUARE ROOT EXTRACTOR
- A/S AIR SUPPLY
- MS MANUAL SWITCH
- AW AIR WRENCH OPERATED
- LT THROTTLED & LOCKED
- FAI FAIL AS IS
- FC FAIL CLOSE
- FO FAIL OPEN
- NE NORMALLY ENERGIZED
- ND NORMALLY DE-ENERGIZED

DRAINS

- DPCT DRAINS TO PRIMARY COOLANT DRAIN TANK
- DEDT DRAINS TO EQUIPMENT DRAIN TANK
- DDWH DRAINS TO DIRTY WASTE HEADER

VENTS

- V VENTS TO ATMOSPHERE
- VCVH VENTS TO CONTAINMENT VENT HEADER
- VGCH VENTS TO GAS COLLECTION HEADER
- VVDT VENTS TO VACUUM DEGASIFIER TANK
- VDT VENTS AND RELIEF TO QUENCH TANK

CONTROL SIGNALS

- NIS NUCLEAR INSTRUMENTATION SYSTEM
- SIS SAFETY INJECTION SIGNAL
- RRS REACTOR REGULATING SYSTEM
- DBA DESIGN BASIC ACCIDENT
- CHP CONTAINMENT HIGH PRESSURE
- CHR CONTAINMENT HIGH RADIATION
- PIP PRIMARY INDICATOR PROCESSOR
- DLS DATA LOGGER SYSTEM

MISCELLANEOUS ABBREVIATIONS

- CVCS CHEMICAL & VOLUME CONTROL SYSTEM
- SIRW SAFETY INJECTION & REFUELING WATER TANK
- N_2 NITROGEN
- H_2 HYDROGEN
- Si SILICA
- Na SODIUM
- pH HYDROGEN POTENTIAL
- Do DISSOLVED OXYGEN
- Hyd HYDRAZINE
- C CONDUCTIVITY, CATIONIC OR SPECIFIC
- EK ELECTRICAL ANNUNCIATOR
- CO CORROSIVITY INSTRUMENT

CONTROL VALVE SYMBOLS

- PSV — PRESSURE SAFETY VALVE
- RV — RELIEF
- SV — 4-WAY SOLENOID VALVE
- SV — SOLENOID (2-WAY)
- SV — SOLENOID (3-WAY) OPEN WHEN ENERGIZED AIR SUPPLY; OPEN WHEN DE-ENERGIZED (SEE NOTE 1)
- EV — PISTON TYPE HYDRAULIC OR PNEUMATICALLYOPERATED
- CONTROL VALVE WITH HAND OPERATOR
- EV — AIR TO CLOSE PNEUMATICALLY OPERATED
- AO — AIR TO OPEN PNEUMATICALLY OPERATED
- EV — ELECTRO PNEUMATICALLY OPERATED
- TCV — TEMPERATURE CONTROL
- PCV — PRESSURE CONTROL
- PCV — PRESSURE CONTROL SELF REGULATED
- LCV — LEVEL CONTROL FLOAT OPERATED
- FCV — FLOW CONTROL
- BTV — BLEEDER TRIP
- MO — MOTOR OPERATED
- CV — AIR ASSIST TO CLOSE CHECK VALVE
- VALVE WITH STEM LEAKOFF (NOTE:LEAKOFFS ARE PLUGGED)
- PO — POWER OPERATED DAMPER
- PRV — POWER RELIEF VALVE

PIPING SYMBOLS

- EJECTOR OR EDUCTOR
- INCREASER, REDUCER
- DRIP LEG
- WELDED CAP
- THREADED PLUG
- SCREWED CAP
- HOSE CONNECTION
- BLIND FLANGE
- FLEXIBLE CONNECTION
- EXHAUST HEAD
- ATMOS. VENT
- LOOP SEAL
- SPRAY NOZZLE
- SPARGER
- IMMERSION HEATER
- 32 — FIRE HOSE REEL STATION; FIRE HOSE REEL STATION (REQUIRED)
- QUICK DISCONNECT
- INSTRUMENT DIAPHRAGM

PIPING SYMBOLS

- SILENCER
- FILTER SILENCER
- DISCHARGE SILENCER
- REMOVABLE FILTER HOLDER
- HEAT EXCHANGER
- SUMP PUMP
- FILTER SILENCER
- LINE FILTER
- AIR COMPRESSOR
- AFTER COOLER
- STATIC MIXER
- TANK AGITATOR OR MIXER
- BELTDRIVE MOTOR
- CONDENSER VACUUM PUMP
- PURGE AIR FILTER
- ROUGHING FILTER 140μ MICRON (OR 60μ MICRON) REMOVABLE FILTER
- DRY TYPE DELUGE VALVE
- WET TYPE DELUGE VALVE
- SCREEN, CONICAL
- STARTUP STRAINER
- SAMPLE POINT
- TEST CONNECTIONS ISOLATION VALVES
- CONTAINMENT PENETRATION
- OPEN DRAIN & FUNNEL
- CLOSED DRAIN
- 32 — FIRE HYDRANT; FIRE HYDRANT (REQUIRED)
- FHS — FIRE HOSE RACK STATION
- FHS-R — FIRE HOSE RACK STATION (REQUIRED)
- FIRE SPRINKLER
- FIRE SPRINKLER (REQUIRED)
- BURIED PIPE
- STRAIGHTENING VANE
- SPECTICAL FLANGE
- 3/N — ASME CLASS BOUNDARY (1,2,3 OR N-NO CLASS)
- FE — METERING ORIFICE
- RO — RESTRICTING ORIFICE
- BS — BASKET STRAINER (SIMPLEX)
- BS — BASKET STRAINER (DUPLEX)
- DT — DRAIN TRAP
- ST — STEAM TRAP
- FE — FLOW NOZZLE
- RD — RUPTURE DISK
- EJ — EXPANSION JOINT
- YS — WYE STRAINER
- DESUPERHEATER
- INSULATION FLANGE (SPEC-CHANGE AT FLANGE)
- SEISMIC CATEGORY I BETWEEN FLAGS
- RRV OR RRV — VACUUM RELIEF VALVE
- RRV — VACUUM AIR RELEASE VALVE
- FG OR LG — SIGHT FLOW GAGE OR LEVEL GAGE GLASS
- FI — IN-LINE FLOW INDICATOR OR VARIABLE AREA METER (ROTAMETER)
- PO — PNEUMATICALLY OPERATED DAMPER
- DAMPER
- POSITIVE DISPLACEMENT PUMP
- CENTRIFUGAL PUMP
- ANS SAFETY CLASS
- MIXING TEE
- D — D LISTED ITEMS
- GEAR PUMP
- MECHANICAL LUBRICATOR
- ML-0000 — EQUIPMENT NUMBER
- RSP — REMOVABLE SPOOL PIECE
- CONTROL ROOM BOUNDRY PENETRATION

LINE NUMBERS

LINE NO. — PIPE CLASS — PIPE SIZE — CBD-901-24"

SYSTEM NO. — PIPE CLASS — PIPE SIZE — AA-5-18"

VALVE NUMBERS

VALVE SIZE — TYPE — NO. — 3"-29

LINES

- MAIN PROCESS
- SECONDARY PROCESS
- HEAT TRACING
- INSTRUMENT CAPILLARY TUBING
- INSTRUMENT CONTROL AIR
- INSTRUMENT PRIMARY
- ELECTRICAL AND THERMOCOUPLE LEADS
- P. & I.D. REFERENCE; (D-5) DRAWING COORDINATES
- LINES SHOWN ON OTHER DRAWINGS
- MECHANICAL CONTROL LINKAGE

TYPICAL NOTATION

PIPE SPEC. CHANGE

A — B

AIR SUPPLY — DIAPHRAGM PUMP

PUSH BUTTON — FLOW RELEASE PILOT VALVE

INBAL DELUGE VALVE

INSTRUMENTATION

- OR — RADIATION ELEMENT; CHECK SOURCE
- AE — TURBIDITY METER ANALYSIS ELEMENT
- MAIN CONTROL ROOM MOUNTED INSTRUMENT
- HS — HS-HAND SWITCH; HIC-HAND INDICATOR CONTROLLER
- ELO OR ELC — HS — ELO-ELECTRICALLY LOCKED OPEN; ELC-ELECTRICALLY LOCKED CLOSED
- AMS — AMS-AUTO MANUAL SWITCH
- C48-LOCAL BOARD NUMBER — LOCAL PANEL MOUNTED INSTRUMENT
- C42-S — LOCAL PANEL, INTERIOR OR REAR MOUNTED INSTRUMENT
- E/P — ELECTRO-PNEUMATIC TRANSDUCER
- I/P — CURRENT-PNEUMATIC TRANSDUCER
- HH-HIGH HIGH; H-HIGH; L-LOW; LL-LOW LOW; D-OPEN — ANNUNCIATED ALARM
- LHT — LIGHT; C-CLOSE; N-NORMAL
- 32 — WINDOW NUMBER; SCHEME NUMBER
- LC-0305 — SIGNAL TO OR FROM ONE SECTION TO ANOTHER SECTION OF SAME P & ID
- CS — MOTOR CONTROL SWITCH
- DX — RELAY
- FQTS — FLOW QUANTITY TOTALIZER (INDICATING SWITCH)
- INTEGRATOR OR INTERLOCK

HEATING & VENTILATION SYMBOLS

- CENTRIFUGAL FAN
- EXHAUSTER
- SUPPLY FAN
- VANEAXIAL FAN
- OR — BACK-DRAFT DAMPER
- FIRE DAMPER
- AIR FILTER
- HIGH EFFICIENCY AIR FILTER
- COOLING COIL
- HEATING COIL
- LOUVER
- DUCT FLANGE
- AUTOMATIC FILTER
- CARBON FILTER
- NON-DUCTED AIR FLOW
- DUCTED AIR FLOW
- SUPPLY AIR FLOW TO SPACE
- RETURN OR EXHAUST AIR FLOW FROM SPACE
- S.R. SUPPLY REGISTER
- R.R. RETURN REGISTER
- E.R. EXHAUST REGISTER
- C.R. CEILING REGISTER
- C.D. CEILING DIFFUSER
- B.D.D. BACK DRAFT DAMPER
- B.D. BALANCING DAMPER
- F.D. FIRE DAMPER

FUNCTION	METER		CONTROLLER			MISCELLANEOUS									ALARM		
TYPE / MEASURED VARIABLE	INDICATOR	RECORDER	BLIND	INDICATING	RECORDING	TRANSMITTERS	INDICATING TRANSMITTERS	ELEMENTS	SWITCHES HIGH,LOW	PERIOD OR RATE OF CHANGE	VOLTAGE OR CURRENT AMP	RELAY OR AUTO SELECTOR	TEST POINTS	INDICATING SWITCH	HIGH	LOW	HIGH & LOW
	I	R	C	IC	RC	T	IT	E			M	re	X	IS	AH	AL	AHL
PRESSURE	P	PI	PR	PC	PIC	PRC	PT			PS	Pt	PM		PX			
TEMPERATURE	T	TI	TR	TC	TIC	TRC	TT		TE	TS	Tt	TM	Tre	TX		TS	
FLOW	F	FI,FG	FR	FC	FIC	FRC	FT		FE	FS	Ft	FM	Fre	FX			
LEVEL	L	LI,LG	LR	LC	LIC	LRC	LT		LE	LS	Lt			LX		LAH	LA	
CONDUCTIVITY	C	CI	CR				CT	CIT	CE	CS						CAH	CA	CA
PRESS. DIFF.	dP	dPI	dPR	dPC	dPIC		dPT			dPS					dPIS			
HYDROGEN CONC.	pH	pHI	pHR		pHIC		pHT	pHIT	pHE	pHS								
NUCLEAR	N	NI	NR							NS	Nt							
HUMIDITY	H	HI					HT											
MOISTURE	M	MI								MS								
OXYGEN	D_2	D_2I	D_2R				D_2T		D_2E	D_2S								
POSITION	Po	PoI		PoC		PoR	PoT			PoS								
POWER	We		WeR	WeC														
RADIATION	R	RI	RR						RE	RS								
SPEED	Sp	SpI		SpC	SpIA		SpT		SpE	SpS	Spt							
DENSITY	D	DI	DR	DC			DT			DS								
VIBRATION	V		VR		VIA		VT		VE	VS								
TEMP. DIFF.	dT	dTI	dTR	dTC			dTT			dTS								
REV. ROTATION										DS								
SPECIAL	J			JC														
ANALYSIS	A	AI	AR				AT	AIT	AE	AS		AM						

NOTES

1) SOLENOID VALVES ARE SHOWN IN DE-ENERGIZED POSITION. N.E. DENOTES SOLENOID IS NORMALLY ENERGIZED DURING PLANT OPERATION. N.D. DENOTES NORMALLY DE-ENERGIZED.

2) REFER TO DWG NOs-M-261 FOR MASTER VALVE LIST
M-260 FOR PIPING CLASSIFICATION SHEETS
M-250 FOR MASTER EQUIPMENT LIST
M-661 FOR PIPING CLASS SUMMARY SHEETS

REV.	DATE	DESCRIPTION	BY	CK	APP
32	06-08-04	REVISED TO ADD BTV TEST VALVE SYMBOL PER CAP030389 AND 84-312 AND TO ADD REQUIRED FIRE PROTECTION EQUIPMENT PER CAP030636 AND DCR 84-247.	ALB		RTO JDA
31	03-16-04	REVISED TO ADD CR BOUNDRY PENETRATION SYMBOL PER CAP017051 AND DCR 84-188	DMB		TJS

Consumers Energy

PALISADES PLANT

PIPING & INSTRUMENT DIAGRAM LEGEND

DRAWING NUMBER: M-200 — SHT. NO. 1 — REV. 32

...\ENG\M2\M200-1.DGN 03/29/2005 11:07:20 AM

C/2