COLOR TABLE-4 DRIVER-L4

THIS DRAWING IS COLOR CODED FOR LICENSE RENEWAL.

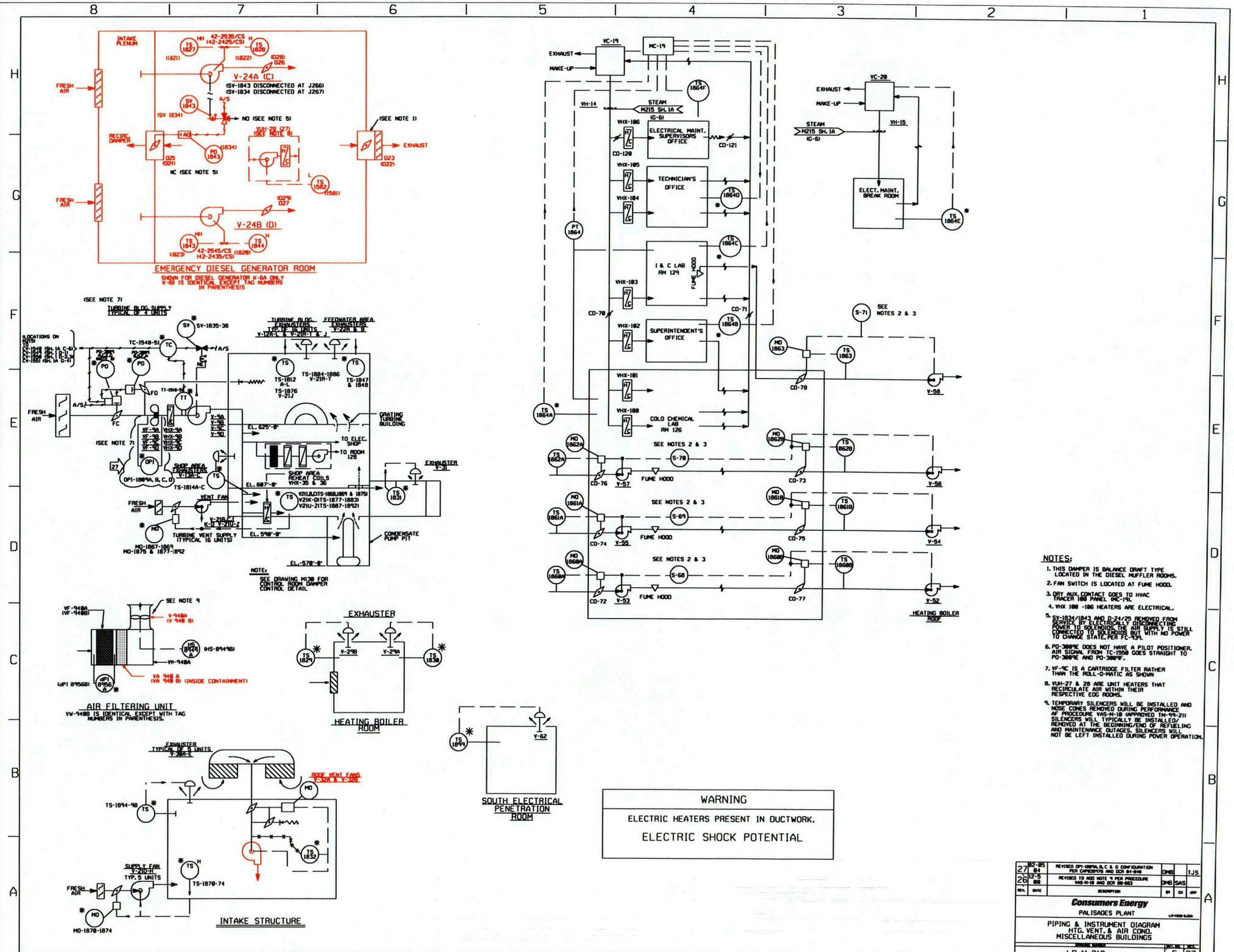

WARNING

ELECTRIC HEATERS PRESENT IN DUCTWORK.

ELECTRIC SHOCK POTENTIAL

NOTES:

1. THIS DAMPER IS BALANCE DRAFT TYPE LOCATED IN THE DIESEL MUFFLER ROOMS.
2. FAN SWITCH IS LOCATED AT FUME HOOD.
3. DRY AUX. CONTACT GOES TO HVAC TRACER 100 PANEL (MC-19).
4. VHX 100 -106 HEATERS ARE ELECTRICAL.
5. SV-1834/1843 AND D-24/25 REMOVED FROM SERVICE BY ELECTRICALLY DISCONNECTING POWER TO SOLENOIDS. THE AIR SUPPLY IS STILL CONNECTED TO SOLENOIDS BUT WITH NO POWER TO CHANGE STATE, PER FC-939.
6. PO-3009E DOES NOT HAVE A PILOT POSITIONER. AIR SIGNAL FROM TC-1550 GOES STRAIGHT TO PO-3009E AND PO-3009F.
7. VF-9C IS A CARTRIDGE FILTER RATHER THAN THE ROLL-O-MATIC AS SHOWN
8. VUH-27 & 28 ARE UNIT HEATERS THAT RECIRCULATE AIR WITHIN THEIR RESPECTIVE EOG ROOMS.
9. TEMPORARY SILENCERS WILL BE INSTALLED AND NOSE CONES REMOVED DURING PERFORMANCE AF PROCEDURE VAS-M-10 (APPROVED TM-99-21) SILENCERS WILL TYPICALLY BE INSTALLED/ REMOVED AT THE BEGINNING/END OF REFUELING AND MAINTENANCE OUTAGES. SILENCERS WILL NOT BE LEFT INSTALLED DURING POWER OPERATION.

REV.	DATE	DESCRIPTION	BY	CK	APP
27	02-05 04	REVISED DPI-1809A, B, C & D CONFIGURATION PER CAP035978 AND DCR 04-048	DMB		TJS
26	12-5 00	REVISED TO ADD NOTE 9 PER PROCEDURE VAS-M-10 AND DCR 00-003	DMB	SAS	

Consumers Energy

PALISADES PLANT

PIPING & INSTRUMENT DIAGRAM
HTG. VENT. & AIR COND.
MISCELLANEOUS BUILDINGS

DRAWING NUMBER: LR-M-218 | SHT. NO. 5 | REV. 27

RED=IN SCOPE FOR LR
BLACK=NOT IN SCOPE

...\dwgrev2-lr\LR-M218-5.dgn 03/21/2005 01:10:44 PM

C66

COLOR TABLE-4 DRIVER-L4

THIS DRAWING IS COLOR CODED FOR LICENSE RENEWAL.

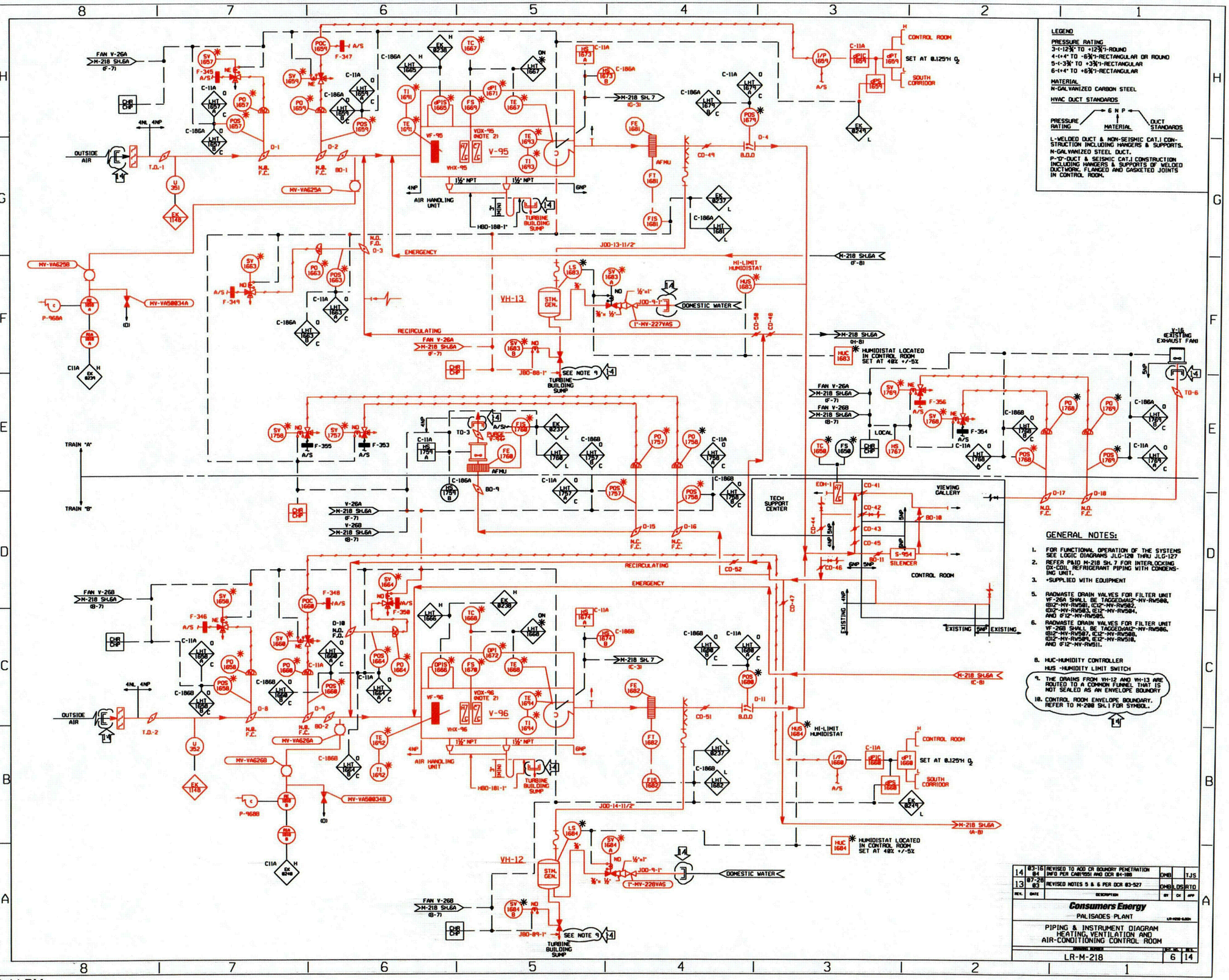

RED=IN SCOPE FOR LR
BLACK=NOT IN SCOPE

...\dwgrev2-lr\LR-M218-6.dgn 03/21/2005 01:13:44 PM

C67

COLOR TABLE-4 DRIVER-L4

THIS DRAWING IS COLOR CODED FOR LICENSE RENEWAL.

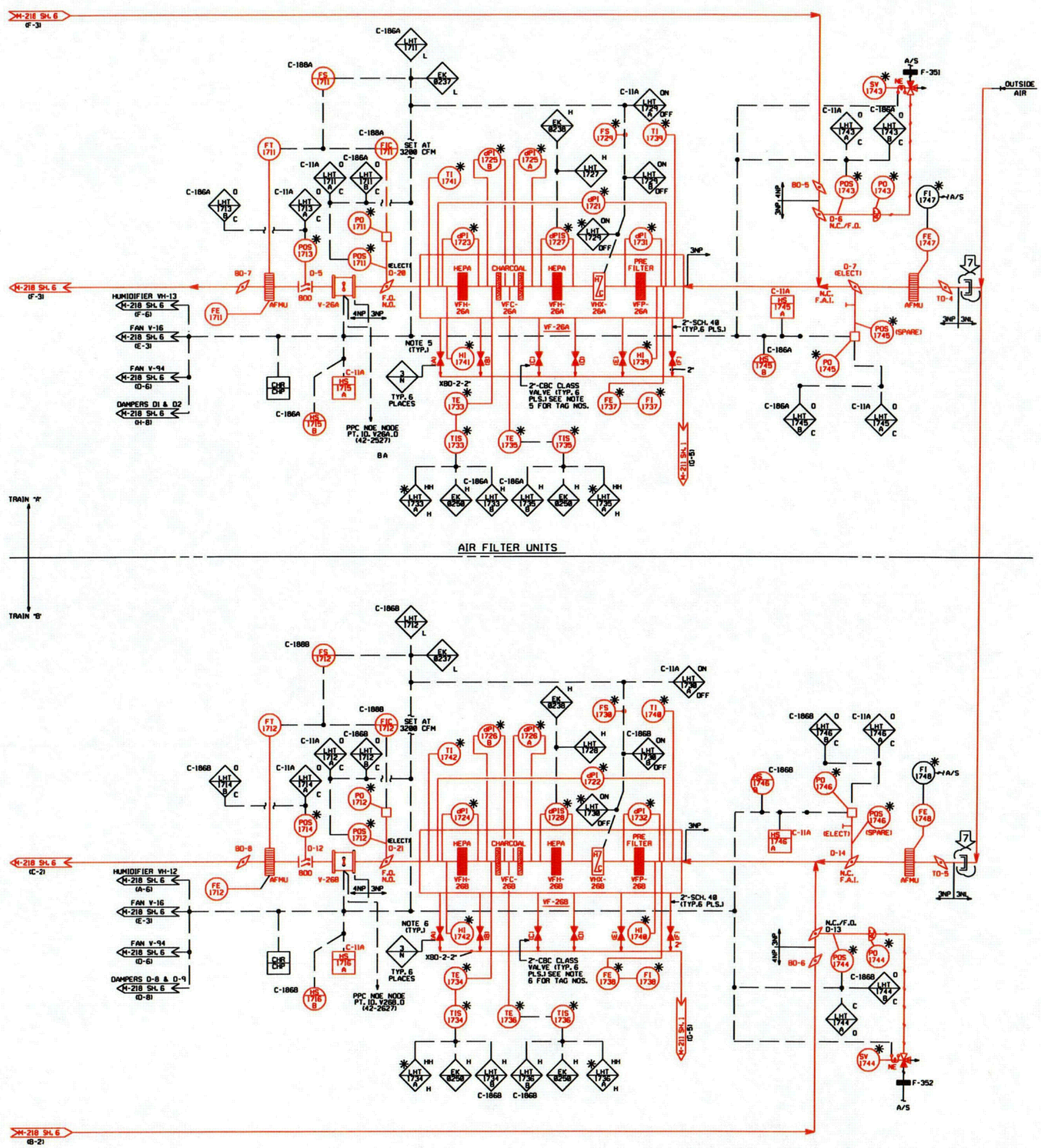

GENERAL NOTES:

REF. M-218 SH. 6

REV.	DATE	DESCRIPTION	BY	CK	APP
7	03-16 04	REVISED TO ADD CR BOUNDRY INFORMATION PER CAP#9551 AND DCR 04-108	DMB		TJS
6	12-31 97	REV'D POS-1711,1712,1745 & 1746 PER DCR 97-1066	JGD	MDS	

Consumers Energy

PALISADES PLANT

PIPING & INSTRUMENT DIAGRAM
HEATING, VENTILATION & AIR CONDITIONING
CONTROL ROOM

LR-M-218 | 6A | 7

RED=IN SCOPE FOR LR
BLACK=NOT IN SCOPE

...\dwgrev2-lr\LR-M218-6A.dgn 03/21/2005 01:14:40 PM

C68

COLOR TABLE-4 DRIVER-L4

THIS DRAWING IS COLOR CODED FOR LICENSE RENEWAL.

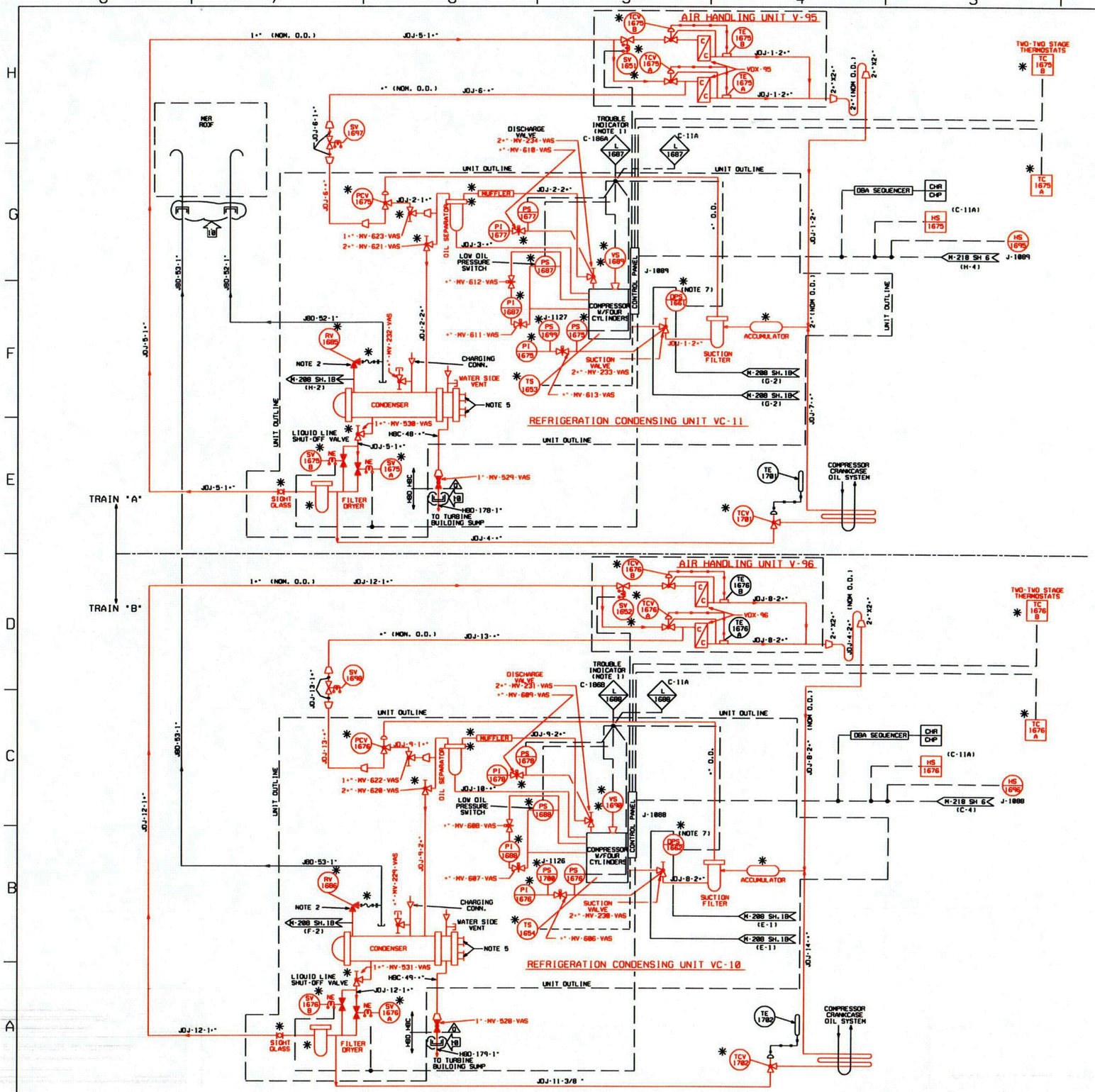

NOTES

1. INDICATES COMPRESSOR TRIPS ON HIGH DISCH. PRESS. LOW OIL PRESSURE. OR LOW SUCTION PRESSURE. ALSO INDICATES HIGH VIBRATION & HIGH SERVICE WATER PRESSURE DROP ACROSS THE CONDENSER. INDICATES HIGH OIL TEMPERATURE TRIP AS WELL.
2. SET AT 350 PSIG.
3. UNIT STARTS & LOADS ONE CYLINDER @ TEMPERATURE AS DETERMINED BY PLANT (TB). LOADS THIRD & FOURTH CYLINDER @ TB·6°F(±1°)
4. LOADS SECOND CYLINDER @ TB·3°F(±1°)
5. FOR SERVICE WATER PIPING CONNECTIONS REFER TO SHEET M-208(D).
6. THE FOLLOWING LISTED ITEMS ARE NON-Q: PI-1678, PI-1688, VS-1690, PI-1676, PI-1677, PI-1687, VS-1689, PI-1675.
7. REFERENCE BY ELLIS & WATTS DRAWING 41F35 (BECHTEL DRAWING 12447-S4-M-91-68).
8. BACKSEATING OF THE FOLLOWING VALVES WILL ISOLATE COMPRESSOR FAULT PROTECTION:
   MV-233-VAS MV-238-VAS
   MV-234-VAS MV-231-VAS
9. CLOSING OF 1"-MV-613-VAS AND 1"-MV-686-VAS WILL PREVENT COMPRESSOR SHUT DOWN AFTER THE AUTO PUMP-DOWN CYCLE
10. ALL LOCALLY MOUNTED INSTRUMENTATION SHOWN IS MOUNTED IN J1888 OR J1889 UNLESS OTHERWISE SPECIFIED.

REV.	DATE	DESCRIPTION	BY	CK	APP
10	03-16-04	REVISED TO ADD CR BOUNDRY PENETRATION INFO PER CA019551 AND DCR 04-108	DMB		TJS
9	02-24-03	REVISED WEST DIESEL GEN. SUMP DESIGNATION TO TURB. BUILD. SUMP PER DCR 03-084	DMB	CLB	MTN

Consumers Energy

PALISADES PLANT

LR-M218-7.DGN

PIPING & INSTRUMENT DIAGRAM
HTG. VENT. & AIR COND.
CONTROL ROOM

DRAWING NUMBER: LR-M-218 SHT. NO. 7 REV. 10

RED=IN SCOPE FOR LR
BLACK=NOT IN SCOPE

...\dwgrev2-lr\LR-M218-7.dgn 03/21/2005 01:15:44 PM

C69

COLOR TABLE-4 DRIVER-L4

THIS DRAWING IS COLOR CODED FOR LICENSE RENEWAL.

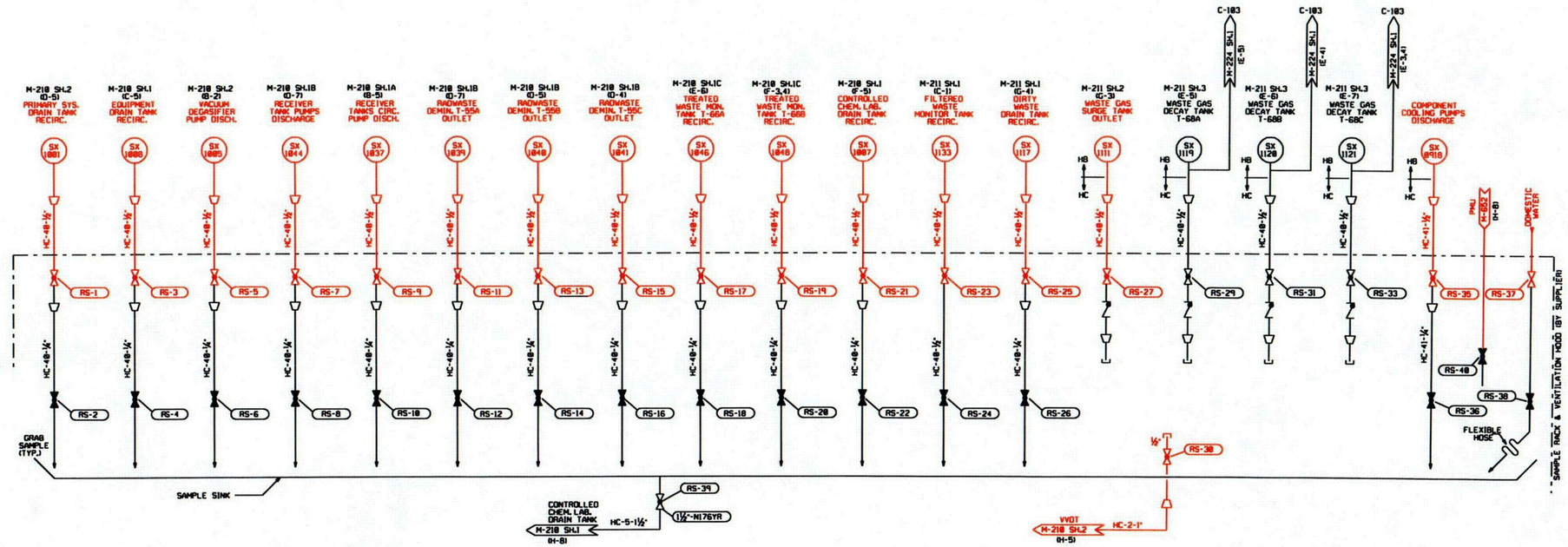

RADWASTE SAMPLING STATION
C-101

NOTES

1. CIA-2024 & 2026 CONDUCTIVITY INSTRUMENTS LOCATED ON TURBINE PLANT ANALYZER PANEL.
2. ALL SAMPLE INLET LINES TO CONNECT FIRST PANEL VALVE ½" O.D. TUBING CONNECTION PROVIDED.

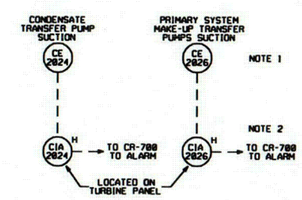

2	8-6-87	CHANGED VALVE DESIGNATOR FROM V TO RS	GAH	JGD	EPL
NO	DATE	REVISIONS	BY	CHK	APP
SCALE NONE		DESIGNED	DRAWN J.L. STERRETT		

Consumers Energy
PALISADES PLANT

PIPING & INSTRUMENTATION DIAGRAM
PROCESS SAMPLING SYSTEM

SITE NO.	DRAWING NO.	REV.
0950	LR-M-219 SH. 1A	2

0950M219.01A

P & I D

RED=IN SCOPE FOR LR
BLACK=NOT IN SCOPE

PB9041284

...\dwgrev2-lr\LR-M219-1A.dgn 03/21/2005 01:26:04 PM

C70

COLOR TABLE-1 DRIVER-L

THIS DRAWING IS COLOR CODED FOR LICENSE RENEWAL.

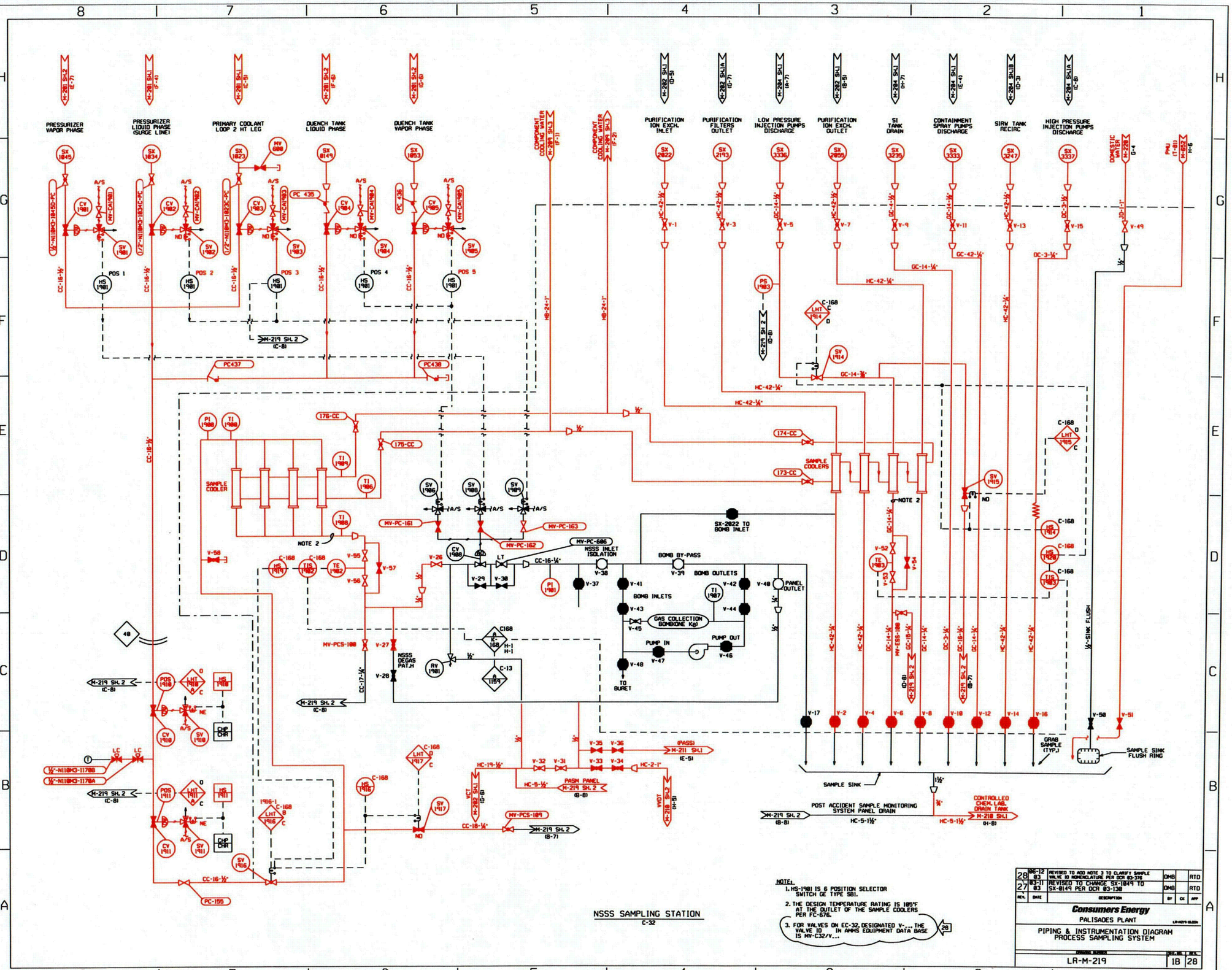

NSSS SAMPLING STATION
C-32

NOTE:
1. HS-1981 IS 6 POSITION SELECTOR SWITCH GE TYPE SB1.
2. THE DESIGN TEMPERATURE RATING IS 185°F AT THE OUTLET OF THE SAMPLE COOLERS PER FC-676.
3. FOR VALVES ON EC-32, DESIGNATED V-... THE VALVE ID IN AMMS EQUIPMENT DATA BASE IS MV-C32/V...

REV.	DATE	DESCRIPTION	BY	CK	APP
28	06-12 03	REVISED TO ADD NOTE 3 TO CLARIFY SAMPLE VALVE ID NOMENCLATURE PER DCR 03-376	DMB		RTD
27	03-11 03	REVISED TO CHANGE SX-1849 TO SX-8149 PER DCR 03-138	DMB		RTD

Consumers Energy
PALISADES PLANT
PIPING & INSTRUMENTATION DIAGRAM
PROCESS SAMPLING SYSTEM

DRAWING NUMBER: LR-M-219 | SHT. NO. 1B | REV. 28

RED=IN SCOPE FOR LR
BLACK=NOT IN SCOPE

...\Dwg-Rev-2-LR\LR-M219-1B.dgn 03/22/2005 08:45:49 AM

C71

COLOR TABLE-1 DRIVER-L

THIS DRAWING IS COLOR CODED FOR LICENSE RENEWAL.

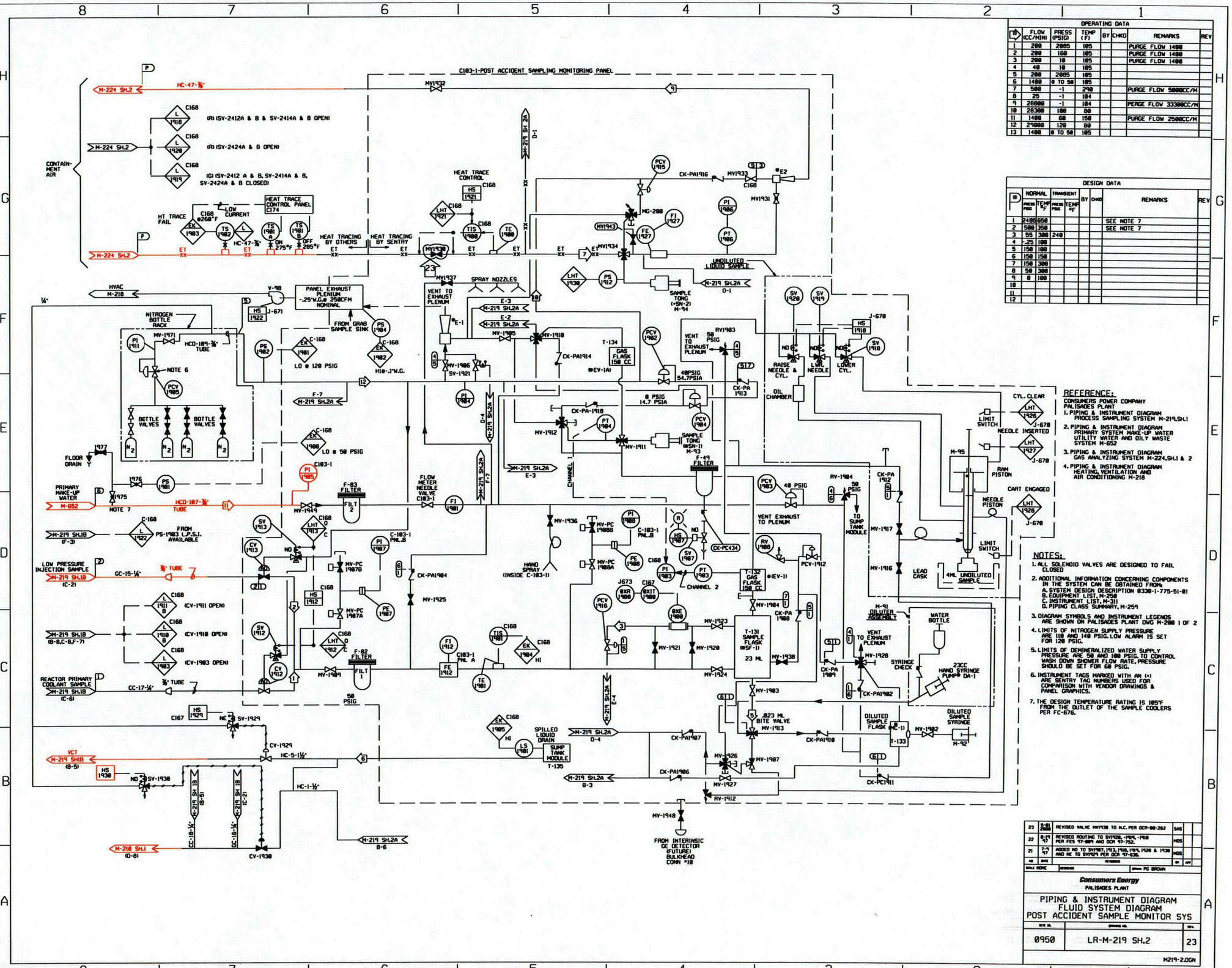

#	FLOW (CC/MIN)	PRESS (PSIG)	TEMP (F)	BY	CHKD	REMARKS	REV
1	200	2085	105			PURGE FLOW 1400	
2	200	160	105			PURGE FLOW 1400	
3	200	10	105			PURGE FLOW 1400	
4	40	10	105				
5	200	2085	105				
6	1400	0 TO 50	105				
7	500	-1	290			PURGE FLOW 5000CC/M	
8	25	-1	104				
9	20000	-1	104			PERGE FLOW 33300CC/M	
10	20300	100	80				
11	1400	60	150			PURGE FLOW 2500CC/M	
12	29000	120	80				
13	1400	0 TO 50	105				

OPERATING DATA

#	NORMAL PRESS PSIG	NORMAL TEMP °F	TRANSIENT PRESS PSIG	TRANSIENT TEMP °F	BY	CHKD	REMARKS	REV
1	2485	650					SEE NOTE 7	
2	500	350					SEE NOTE 7	
3	55	300	240					
4	-.25	100						
5	150	100						
6	150	150						
7	150	300						
8	50	300						
9	0	100						
10								
11								
12								

DESIGN DATA

REFERENCE:

CONSUMERS POWER COMPANY
PALISADES PLANT

1. PIPING & INSTRUMENT DIAGRAM PROCESS SAMPLING SYSTEM M-219,SH.1
2. PIPING & INSTRUMENT DIAGRAM PRIMARY SYSTEM MAKE-UP WATER UTILITY WATER AND OILY WASTE SYSTEM M-652
3. PIPING & INSTRUMENT DIAGRAM GAS ANALYZING SYSTEM M-224,SH.1 & 2
4. PIPING & INSTRUMENT DIAGRAM HEATING,VENTILATION AND AIR CONDITIONING M-218

NOTES:

1. ALL SOLENOID VALVES ARE DESIGNED TO FAIL CLOSED
2. ADDITIONAL INFORMATION CONCERNING COMPONENTS IN THE SYSTEM CAN BE OBTAINED FROM:
   A. SYSTEM DESIGN DESCRIPTION 0330-1-775-51-0
   B. EQUIPMENT LIST, M-258
   C. INSTRUMENT LIST, M-311
   D. PIPING CLASS SUMMARY, M-259
3. DIAGRAM SYMBOLS AND INSTRUMENT LEGENDS ARE SHOWN ON PALISADES PLANT DWG M-200 1 OF 2
4. LIMITS OF NITROGEN SUPPLY PRESSURE ARE 110 AND 140 PSIG. LOW ALARM IS SET FOR 120 PSIG.
5. LIMITS OF DEMINERALIZED WATER SUPPLY PRESSURE ARE 50 AND 100 PSIG. TO CONTROL WASH DOWN SHOWER FLOW RATE, PRESSURE SHOULD BE SET FOR 60 PSIG.
6. INSTRUMENT TAGS MARKED WITH AN (+) ARE SENTRY TAG NUMBERS USED FOR COMPARISON WITH VENDOR DRAWINGS & PANEL GRAPHICS.
7. THE DESIGN TEMPERATURE RATING IS 185°F FROM THE OUTLET OF THE SAMPLE COOLERS PER FC-676.

#	DATE	REVISIONS	BY	APP
23	5-01 JWB	REVISED VALVE MV1938 TO N.C. PER DCR-00-262	SAS	
22	8-19 97	REVISED ROUTING TO SV1926,-1918,-1918 PER FCS 97-004 AND DCR 97-752.	MDS	
21	7-9 97	ADDED NO TO SV1907,1913,1918,1919,1920 & 1930 AND NC TO SV1929 PER DCR 97-836.	MDS	

SCALE NONE — DRAWN PG BROWN

Consumers Energy
PALISADES PLANT

PIPING & INSTRUMENT DIAGRAM
FLUID SYSTEM DIAGRAM
POST ACCIDENT SAMPLE MONITOR SYS

SYS NO.	DRAWING NO.	REV.
0950	LR-M-219 SH.2	23

M219-2.DGN

JS1041584

RED=IN SCOPE FOR LR
BLACK=NOT IN SCOPE

...\dwgrev2-lr\LR-M219-2.dgn 03/21/2005 01:28:44 PM

C72

COLOR TABLE-2 DRIVER-L2

THIS DRAWING IS COLOR CODED FOR LICENSE RENEWAL.

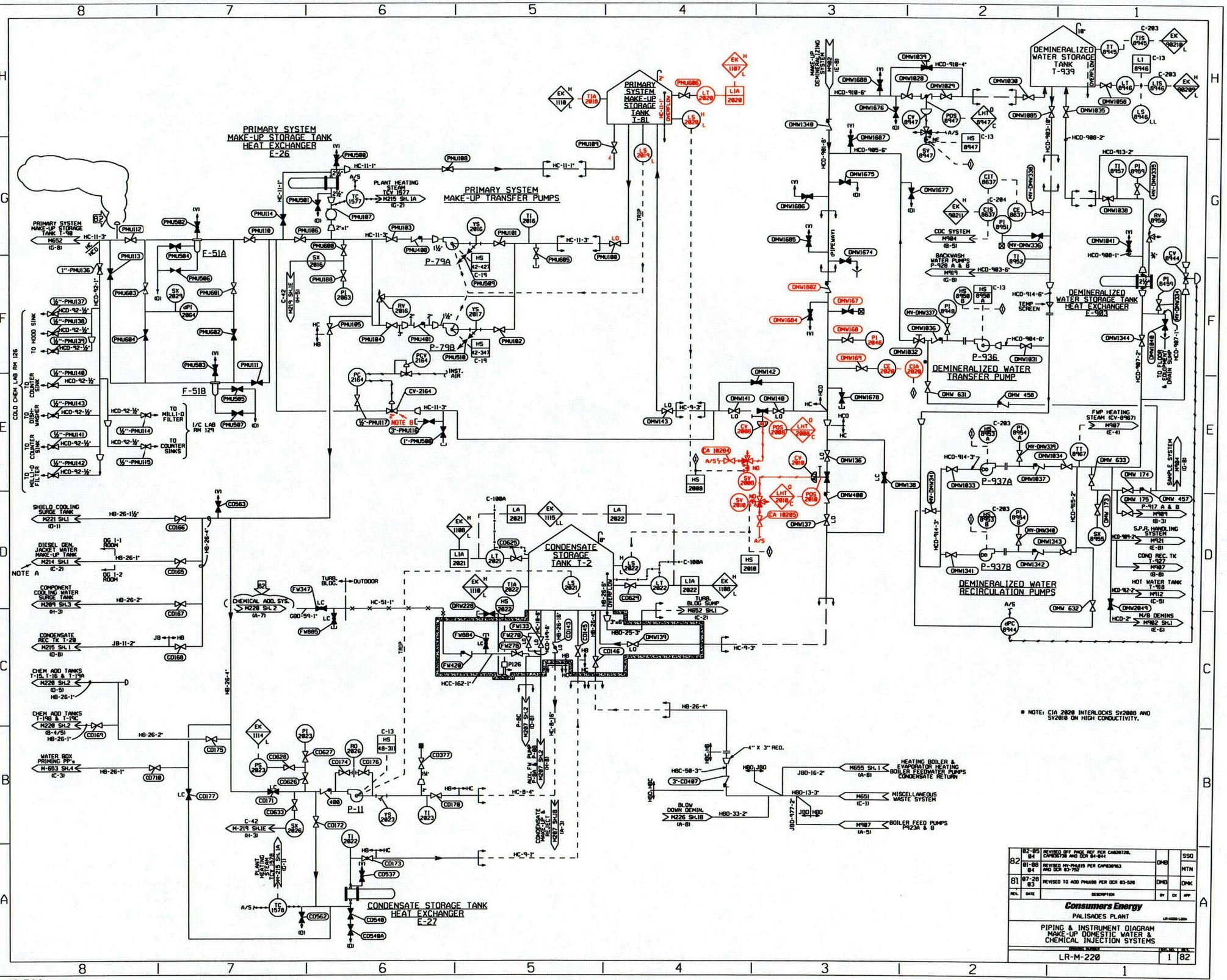

RED=IN SCOPE FOR LR

BLACK=NOT IN SCOPE

...\dwgrev2-lr\LR-M220-1.dgn 03/21/2005 01:31:48 PM

C73

COLOR TABLE-1 DRIVER-L

THIS DRAWING IS COLOR CODED FOR LICENSE RENEWAL.

LR NOTE: IN SCOPE
1) BOUNDRY ENDS AS PIPING EXITS TURBINE BUILDING.

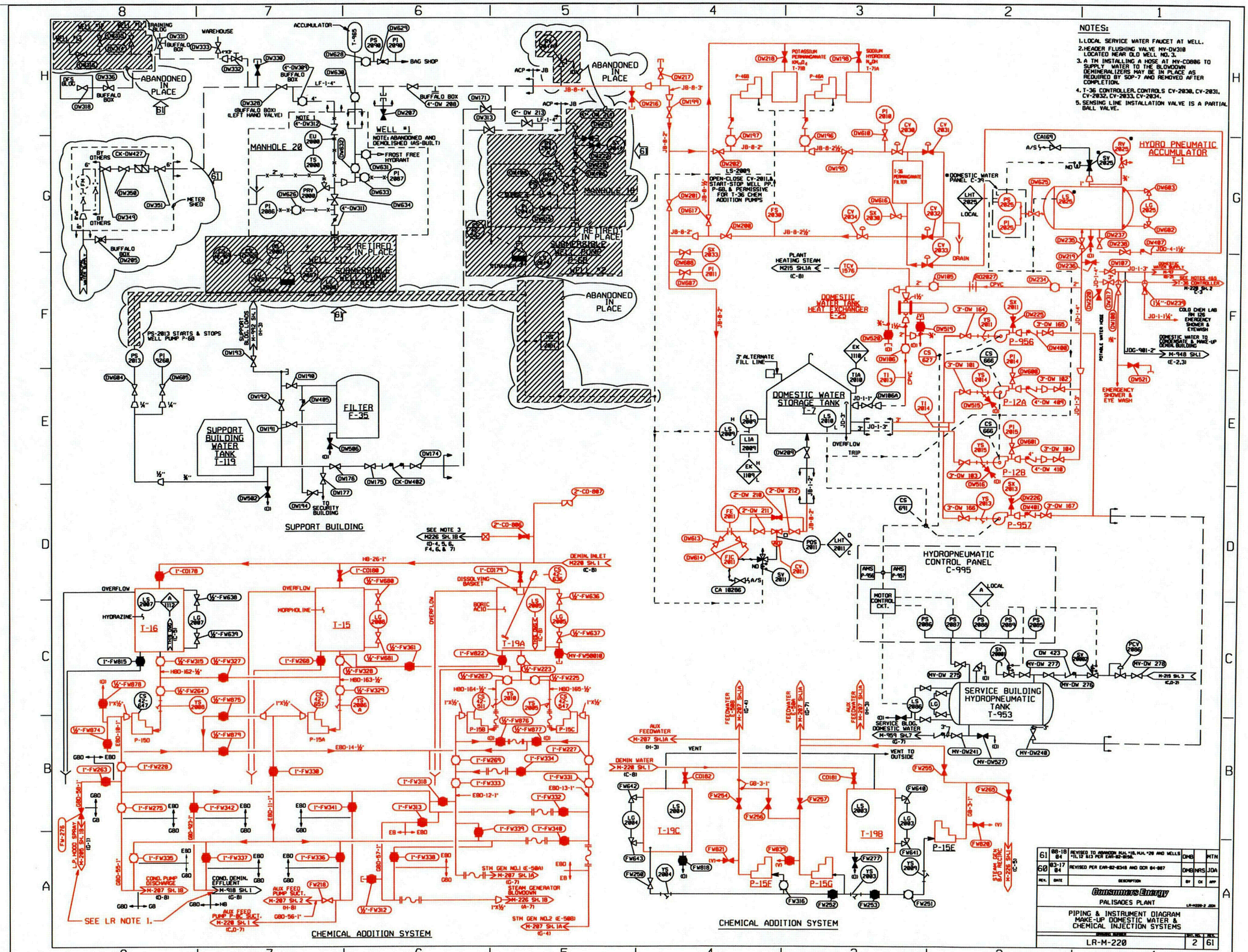

...\dwgrev2-lr\LR-M220-2.dgn 03/21/2005 01:33:16 PM

C74

COLOR TABLE-3 DRIVER-L3

THIS DRAWING IS COLOR CODED FOR LICENSE RENEWAL.

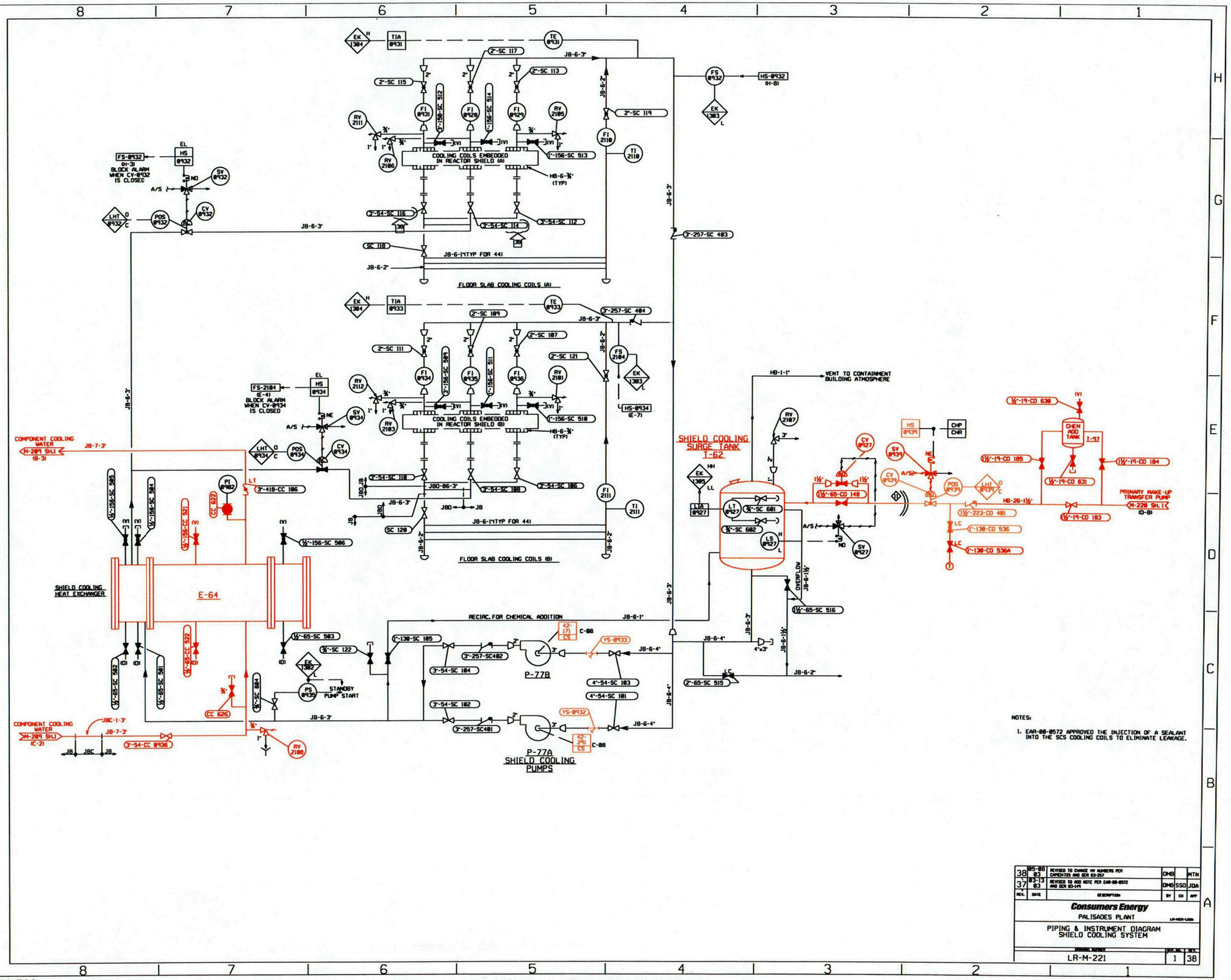

RED=IN SCOPE FOR LR

BLACK=NOT IN SCOPE

...\dwgrev2-lr\LR-M221-1.dgn 03/21/2005 01:35:09 PM

C75

COLOR TABLE-3 DRIVER-L3

THIS DRAWING IS COLOR CODED FOR LICENSE RENEWAL.

NOTES:

A. THE SKIMMERS LEAK AND ARE NOT USED. FLOATING FILTERS ARE USED AND ARE IN THE BOUNDARY OF LR.

NOTES:

1. M-96 INLET TO BE CONNECTED TO MY-SPF504 AND DISCHARGE ROUTED TO THE REACTOR CAVITY AS REQ'D. BY SPECIAL OPERATING PROCEDURE RWSO-5 DURING REF. OUT'S ONLY. EQUIPMENT IS SKID MOUNTED AND REMOVED FROM CONTAINMENT DURING NORMAL OPERATION.
2. TM HAS BEEN APPROVED IN MRS 2.2.2 PAL-22 TO CONNECT A DRAIN HOSE FROM ANY LEAKING STEAM GENERATOR NOZZLE DAM TO M-896 IF NEEDED WHEN STEAM GENERATOR NOZZLE DAMS ARE INSTALLED.
3. A TM HAS BEEN APPROVED TO REMOVE SPOOL PIECE TO CONNECT PORTABLE FILTER TO FLANGE ON MY-SFP123 SIDE TO DRAIN FUEL TILT MECH. PIT PER SOP-27 AS REQUIRED.
4. A TM HAS BEEN APPROVED TO REDIRECT THE OUTLET OF MY-SFP506 FROM THE LOCAL COLLECTION CONTAINER TO A TRINUC MODEL 7PS-60 SHIELDED FLUSH FILTER DURING REFUELING OPERATIONS. THE FILTER DISCHARGE IS ROUTED TO A FLOOR DRAIN TO THE CONTAINMENT SUMP BY INI-RSO-A-007 AND SOP-27 AS REQUIRED.
5. A REMOVABLE TRI-NUCLEAR FILTER IS INSTALLED IN THE SFP SOUTH TILT PIT DRAIN FITTING.
6. FI-2122 AND FI-2123 IS A DUAL CHANNEL DISPLAY FLOW METER. FE-2122 AND FE-2123 ARE TRANSDUCERS WHICH SUPPLY FLOW SIGNAL TO THE DISPLAY METER.
7. A TEMPORARY MODIFICATION HAS BEEN APPROVED TO INSTALL A STANDPIPE IN THE REACTOR CAVITY TILT PIT DRAIN DURING REFUELING OUTAGES. THIS TEMPORARY MODIFICATION IS INSTALLED/REMOVED PER PERMANENT MAINTENANCE PROCEDURE SFP-M-3.

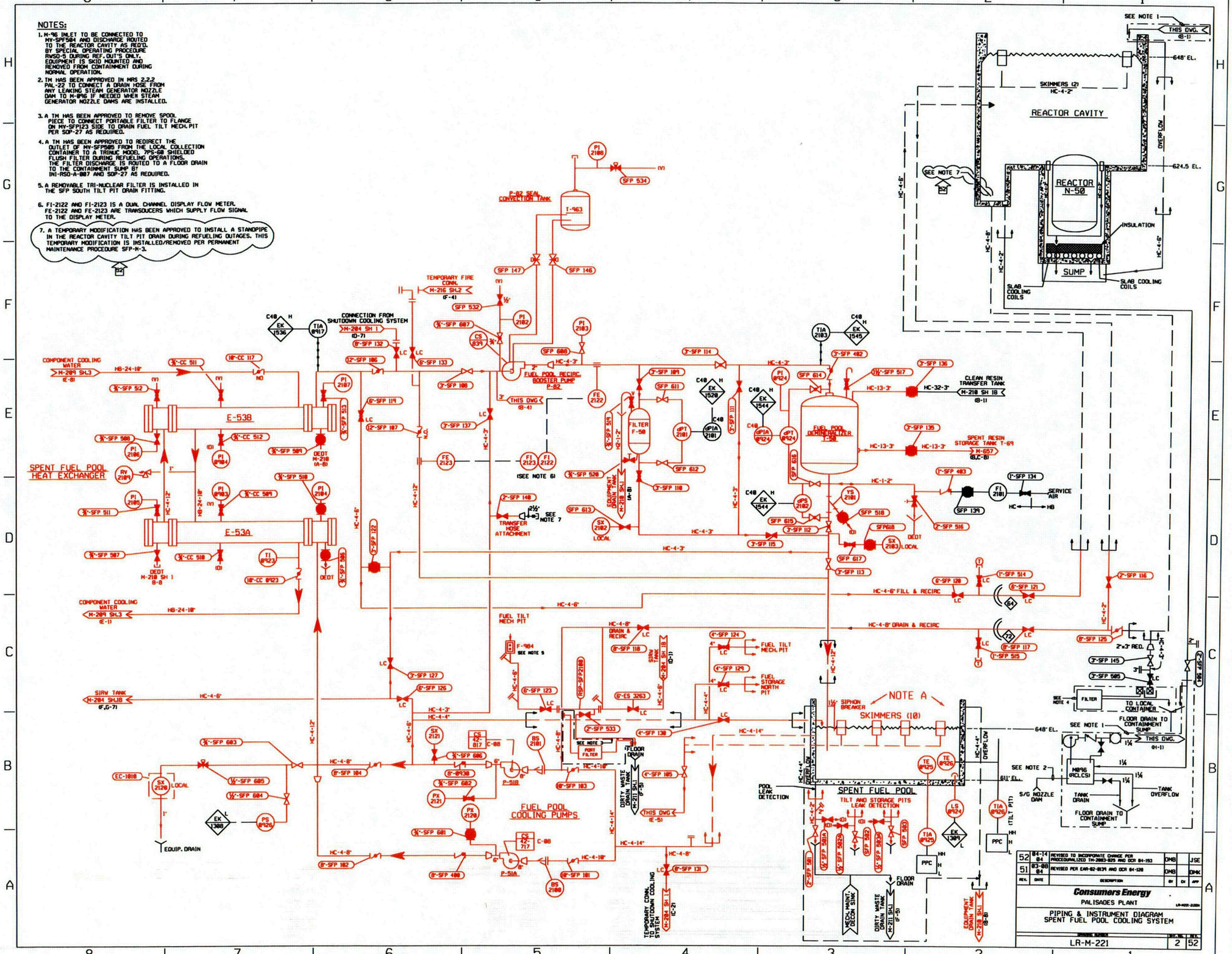

RED=IN SCOPE FOR LR
BLACK=NOT IN SCOPE

...\dwgrev2-lr\LR-M221-2.dgn 03/21/2005 01:36:09 PM

C76

COLOR TABLE-1 DRIVER-L

THIS DRAWING IS COLOR CODED FOR LICENSE RENEWAL.

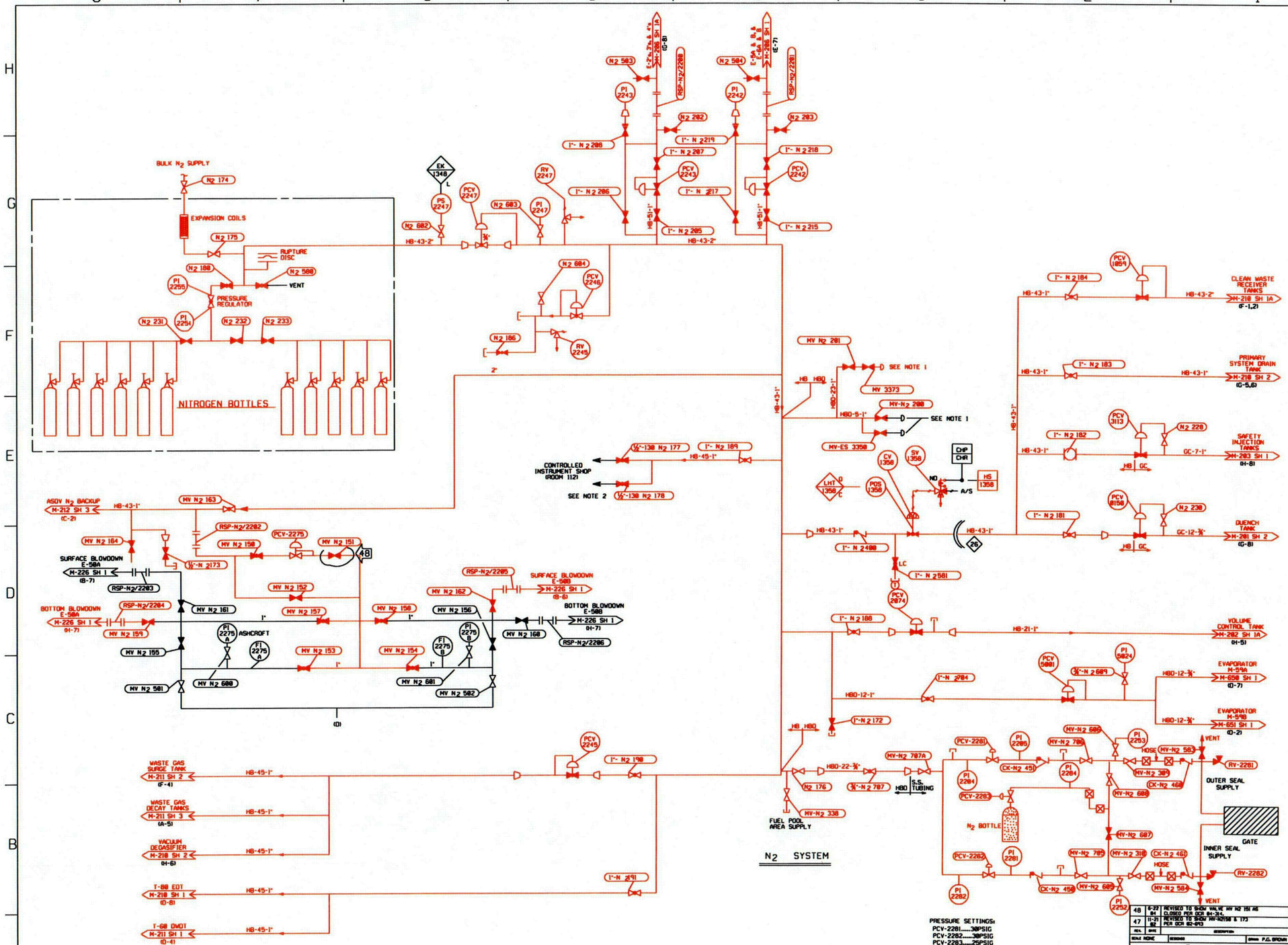

RED=IN SCOPE FOR LR
BLACK=NOT IN SCOPE

...\dwgrev2-lr\LR-M222-1.dgn 03/21/2005 01:37:23 PM

C77

COLOR TABLE-1 DRIVER-L

THIS DRAWING IS COLOR CODED FOR LICENSE RENEWAL.

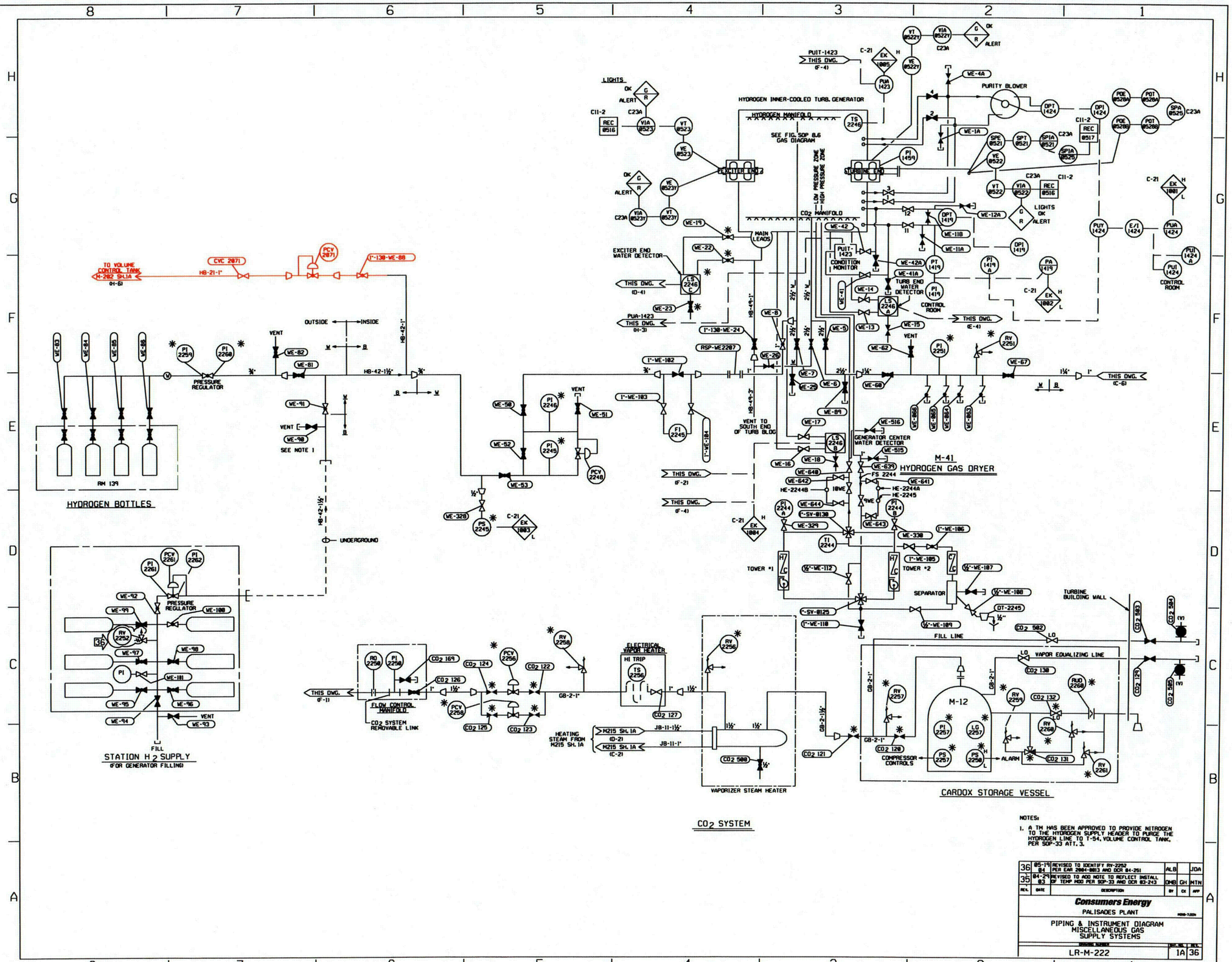

RED=IN SCOPE FOR LR
BLACK=NOT IN SCOPE

...\dwgrev2-lr\LR-M222-1A.dgn 03/21/2005 01:39:19 PM

C78

COLOR TABLE-1 DRIVER-L

THIS DRAWING IS COLOR CODED FOR LICENSE RENEWAL.

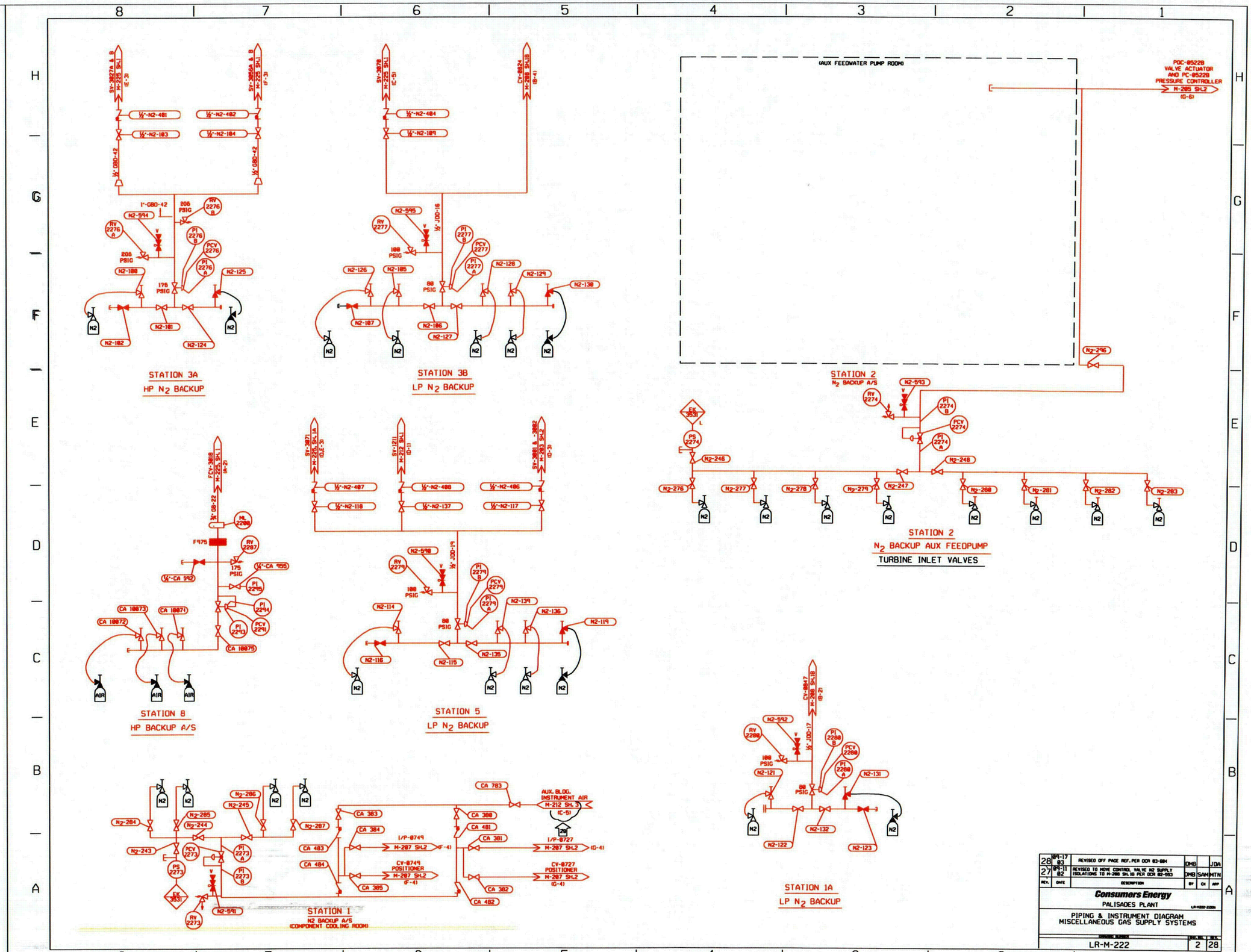

REV.	DATE	DESCRIPTION	BY	CK	APP
28	APR-17 03	REVISED OFF PAGE REF. PER DCR 03-084	DMB		JDA
27	APR-11 02	REVISED TO MOVE CONTROL VALVE N2 SUPPLY ISOLATIONS TO M-208 SH.10 PER DCR 02-053	DMB	SAM	MTN

Consumers Energy
PALISADES PLANT

PIPING & INSTRUMENT DIAGRAM
MISCELLANEOUS GAS SUPPLY SYSTEMS

LR-M-222 | 2 | 28

RED=IN SCOPE FOR LR
BLACK=NOT IN SCOPE

...\dwgrev2-lr\LR-M222-2.dgn 03/21/2005 01:50:18 PM

C79

COLOR TABLE-1 DRIVER-L

THIS DRAWING IS COLOR CODED FOR LICENSE RENEWAL.

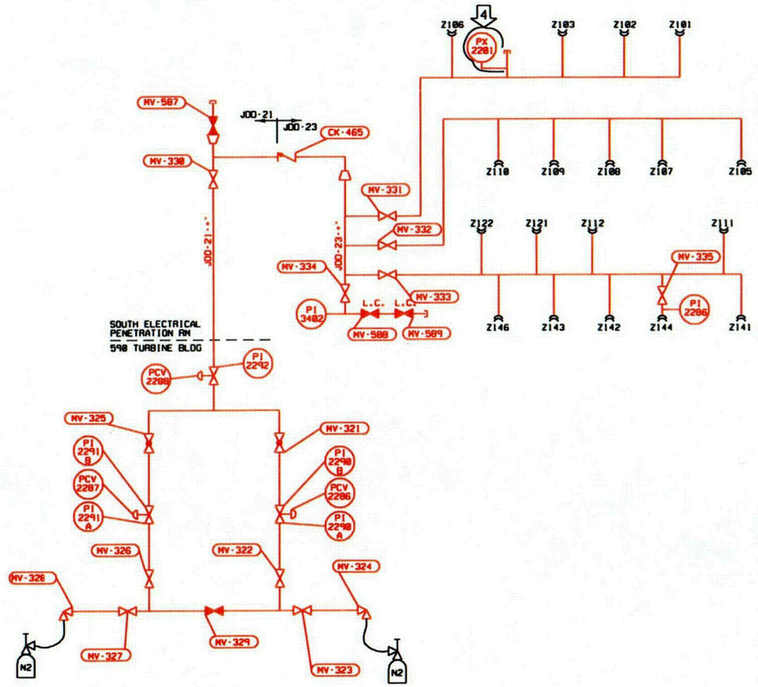

SOUTH ELECTRICAL PENETRATION ROOM CONTAINMENT CANNISTERS

LP NITROGEN STATION 7

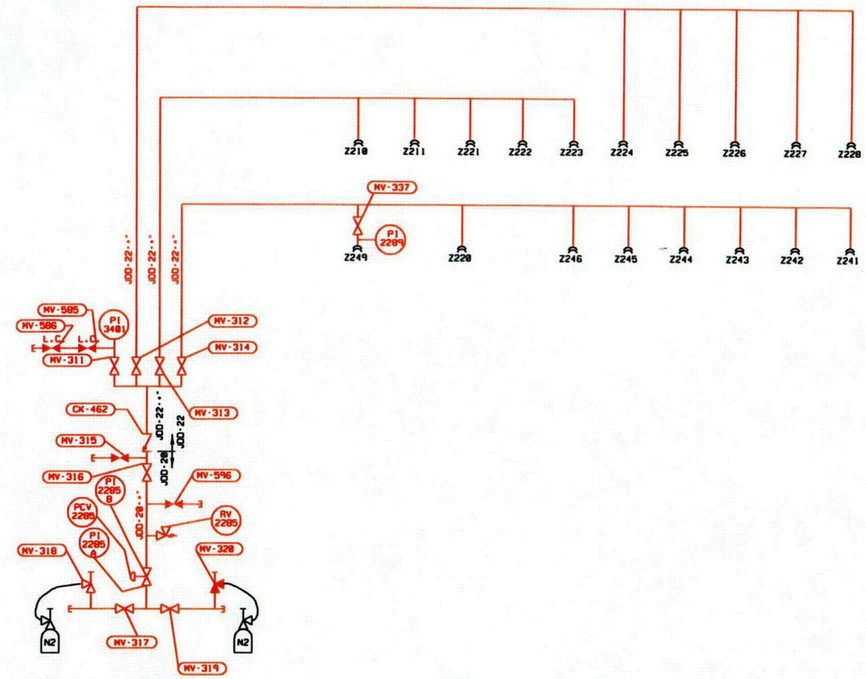

STATION 6
LP NITROGEN
NORTH ELECTRICAL PENETRATION ROOM CONTAINMENT CANISTERS

NOTES

1. ALL VALVE SYSTEM DESIGNATIONS TO BE $_2$N UNLESS NOTED OTHERWISE.

REFERENCE DRAWINGS:

VEN-M-110 SH. 3630(1) NORTH PENETRATION ROOM N_2 TUBING TO PENETRATIONS ISOMETRIC

VEN-M-110 SH. 3630(2) SOUTHWEST PENETRATION ROOM N_2 TUBING TO PENETRATIONS ISOMETRIC

REV.	DATE	DESCRIPTION	BY	CK	APP
4	04-03-03	REVISED TO ADD PX-2201 PER DCR 03-222	DNB		JDA
3	06-01-98	ADDED HV-596 PER EAR-96-0463 AND DCR 98-418	DNB	MDS	

Consumers Energy
PALISADES PLANT

PIPING & INSTRUMENT DIAGRAM
MISCELLANEOUS GAS SUPPLY SYSTEMS

DRAWING NUMBER: LR-M-222 | SHT. 3 | REV. 4

RED=IN SCOPE FOR LR
BLACK=NOT IN SCOPE

...\dwgrev2-lr\LR-M222-3.dgn 03/21/2005 01:51:23 PM

C80

COLOR TABLE-2 DRIVER-L2

THIS DRAWING IS COLOR CODED FOR LICENSE RENEWAL.

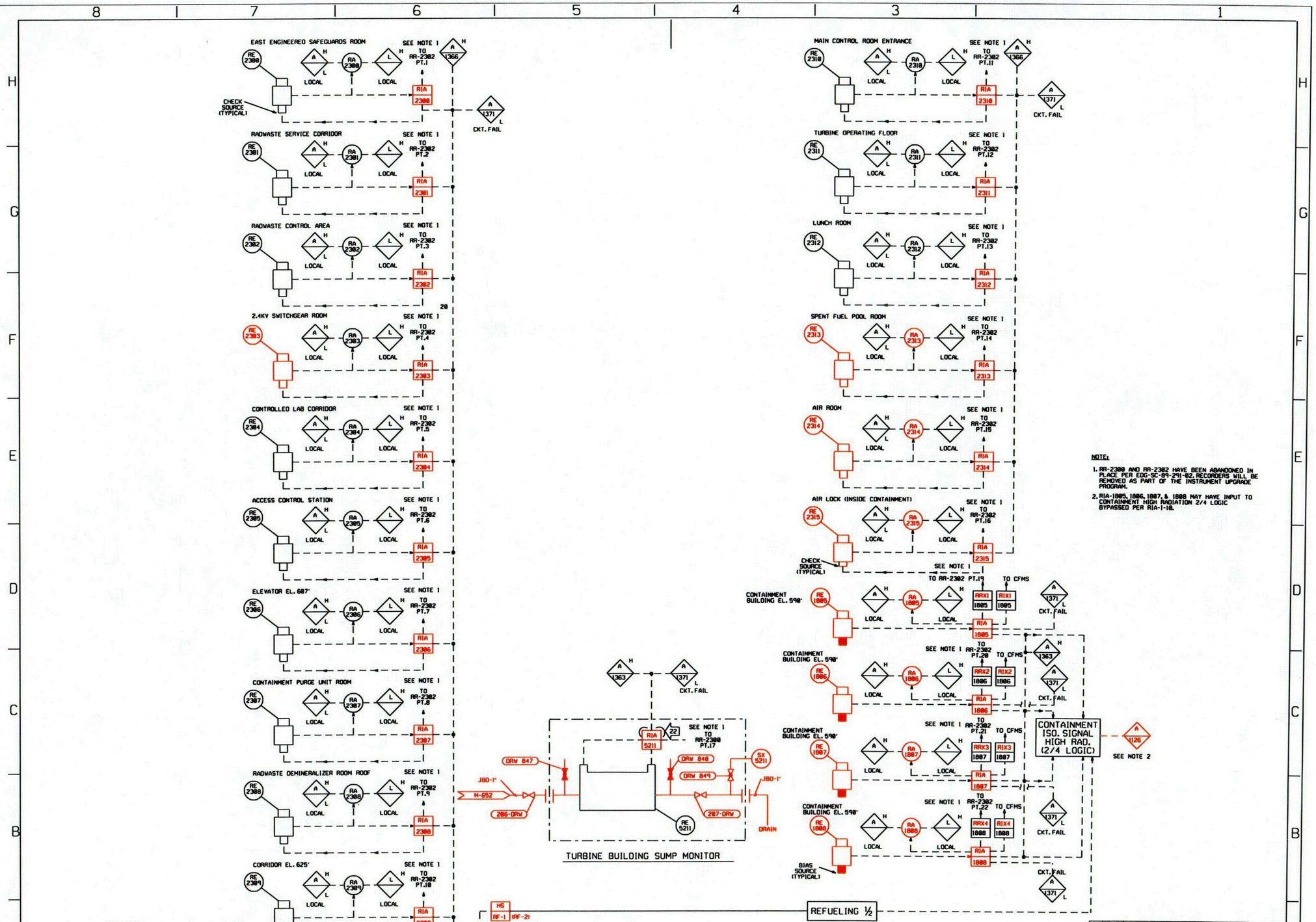

NOTE:

1. RR-2300 AND RR-2302 HAVE BEEN ABANDONED IN PLACE PER EDG-SC-89-291-02. RECORDERS WILL BE REMOVED AS PART OF THE INSTRUMENT UPGRADE PROGRAM.
2. RIA-1805, 1806, 1807, & 1808 MAY HAVE INPUT TO CONTAINMENT HIGH RADIATION 2/4 LOGIC BYPASSED PER RIA-1-18.

REFERENCE DRAWINGS

E227 SH.1 & 2
E623 SH.1 & 2
950Y15-H217 SH.19

REV.	DATE	DESCRIPTION	BY	CK	APP
22	09-17-03	REVISED RI-5211 TO RIA PER DCR 03-683	DHB		RTO
21	04-27-98	ADDED NOTE 2 PER DCR-98-317	JGD	DHB	

Consumers Energy
PALISADES PLANT

PIPING & INSTRUMENT DIAGRAM
RADIATION MONITORING AND
SAMPLING SYSTEMS

DRAWING NUMBER: LR-M-223 | SHT. NO. 1 | REV. 22

RED=IN SCOPE FOR LR
BLACK=NOT IN SCOPE

...\dwgrev2-lr\LR-M223-1.dgn 03/21/2005 01:52:17 PM

C81

COLOR TABLE-2 DRIVER-L2

THIS DRAWING IS COLOR CODED FOR LICENSE RENEWAL.

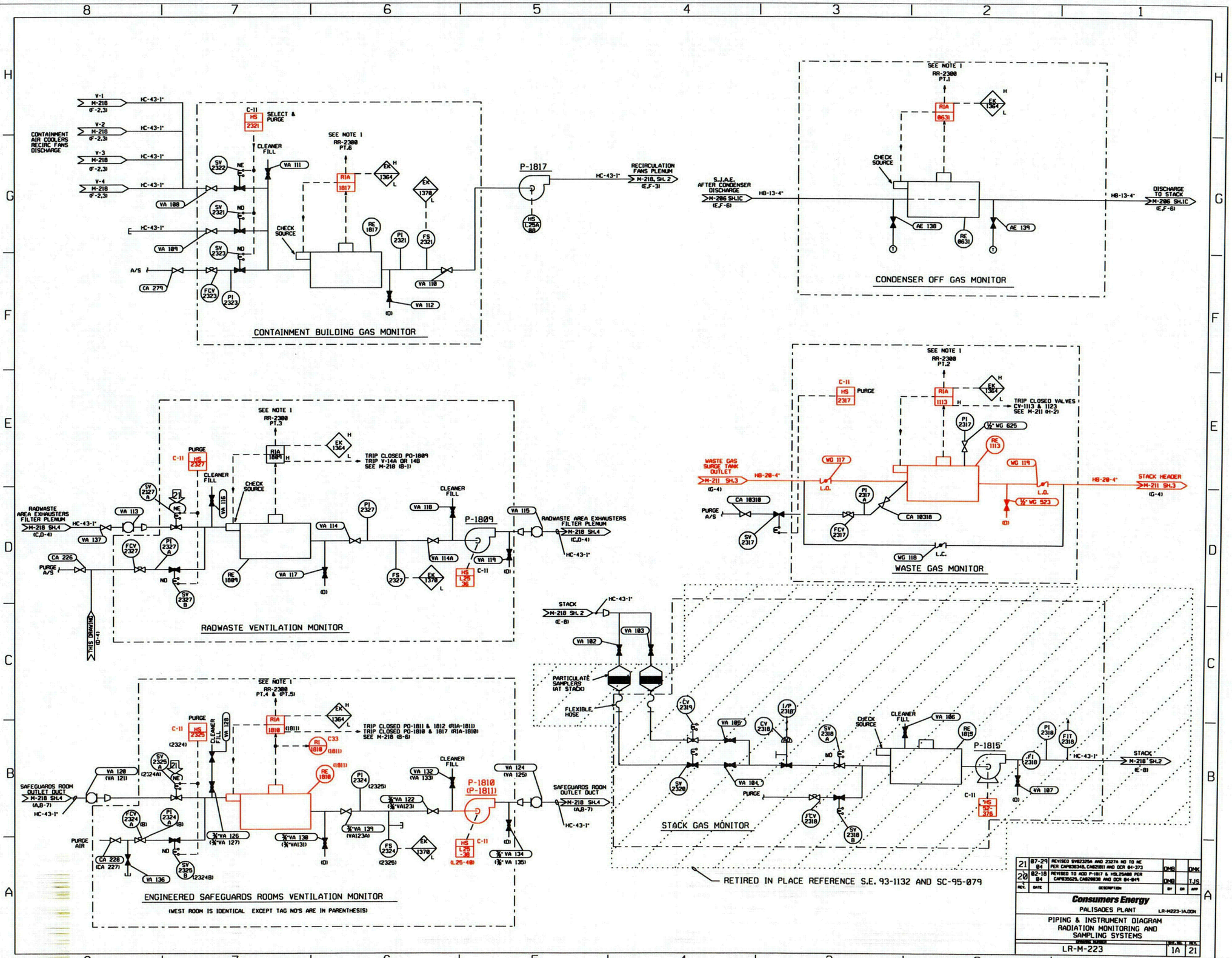

RED=IN SCOPE FOR LR
BLACK=NOT IN SCOPE

...\dwgrev2-lr\LR-M223-1A.dgn 03/21/2005 01:53:05 PM

C82

COLOR TABLE-3 DRIVER-L3

THIS DRAWING IS COLOR CODED FOR LICENSE RENEWAL.

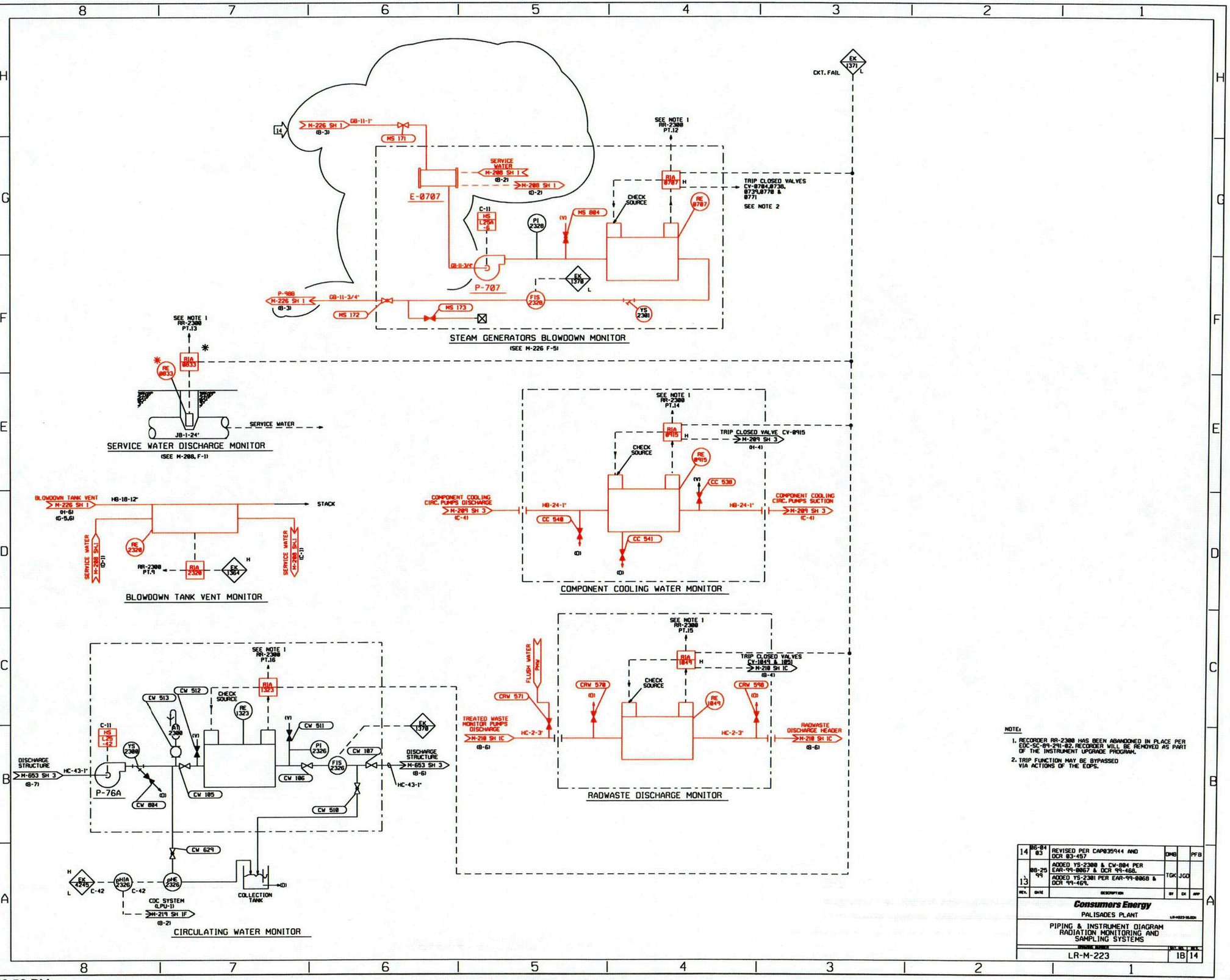

NOTE:

1. RECORDER RR-2300 HAS BEEN ABANDONED IN PLACE PER EDC-SC-89-291-02. RECORDER WILL BE REMOVED AS PART OF THE INSTRUMENT UPGRADE PROGRAM.
2. TRIP FUNCTION MAY BE BYPASSED VIA ACTIONS OF THE EOPS.

REV.	DATE	DESCRIPTION	BY	CK	APP
14	06-04 03	REVISED PER CAP035944 AND DCR 03-457	DMB		PFB
13	08-25 99	ADDED YS-2300 & CW-804 PER EAR-99-0067 & DCR 99-468. ADDED YS-2301 PER EAR-99-0068 & DCR 99-469.	TGK	JGD	

Consumers Energy

PALISADES PLANT

PIPING & INSTRUMENT DIAGRAM
RADIATION MONITORING AND
SAMPLING SYSTEMS

LR-M-223 | 1B | 14

RED=IN SCOPE FOR LR
BLACK=NOT IN SCOPE

...\dwgrev2-lr\LR-M223-1B.dgn 03/21/2005 01:53:53 PM

C83

COLOR TABLE-2 DRIVER-L2

THIS DRAWING IS COLOR CODED FOR LICENSE RENEWAL.

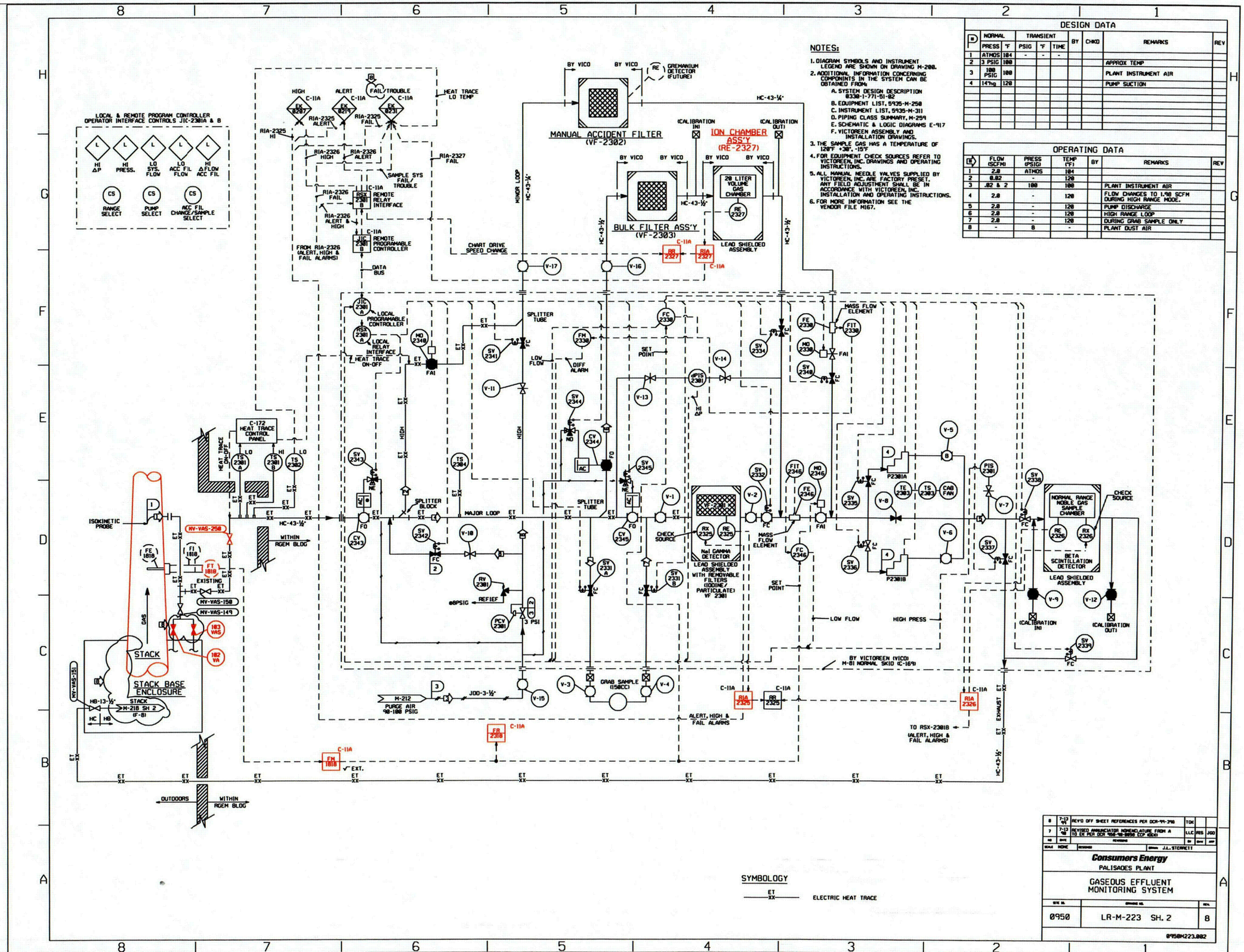

NOTES:

1. DIAGRAM SYMBOLS AND INSTRUMENT LEGEND ARE SHOWN ON DRAWING M-200.
2. ADDITIONAL INFORMATION CONCERNING COMPONINTS IN THE SYSTEM CAN BE OBTAINED FROM:
   A. SYSTEM DESIGN DESCRIPTION 8338-I-771-81-82
   B. EQUIPMENT LIST, 5935-M-250
   C. INSTRUMENT LIST, 5935-M-311
   D. PIPING CLASS SUMMARY, M-259
   E. SCHEMATIC & LOGIC DIAGRAMS E-917
   F. VICTOREEN ASSEMBLY AND INSTALLATION DRAWINGS.
3. THE SAMPLE GAS HAS A TEMPERATURE OF 120°F +30°, -15°F
4. FOR EQUIPMENT CHECK SOURCES REFER TO VICTOREEN, INC. DRAWINGS AND OPERATING INSTRUCTIONS.
5. ALL MANUAL NEEDLE VALVES SUPPLIED BY VICTOREEN, INC. ARE FACTORY PRESET. ANY FIELD ADJUSTMENT SHALL BE IN ACCORDANCE WITH VICTOREEN, INC. INSTALLATION AND OPERATING INSTRUCTIONS.
6. FOR MORE INFORMATION SEE THE VENDOR FILE M167.

DESIGN DATA

ID	NORMAL PRESS	NORMAL °F	TRANSIENT PSIG	TRANSIENT °F	TRANSIENT TIME	BY	CHKD	REMARKS	REV
1	ATMOS	104	-	-	-				
2	3 PSIG	100						APPROX TEMP	
3	100 PSIG	100						PLANT INSTRUMENT AIR	
4	14"hg	120						PUMP SUCTION	

OPERATING DATA

ID	FLOW (SCFM)	PRESS (PSIG)	TEMP (°F)	BY	REMARKS	REV
1	2.0	ATMOS	104			
2	0.02	-	120			
3	.02 & 2	100	100		PLANT INSTRUMENT AIR	
4	2.0	-	120		FLOW CHANGES TO 1.98 SCFM DURING HIGH RANGE MODE.	
5	2.0	-	120		PUMP DISCHARGE	
6	2.0	-	120		HIGH RANGE LOOP	
7	2.0	-	120		DURING GRAB SAMPLE ONLY	
8	-	8	-		PLANT DUST AIR	

REV	DATE	REVISIONS	BY	CHK	APP
8	7-13-98	REV'D OFF SHEET REFERENCES PER DCR-98-398	TGK		
7	7-13-98	REVISED ANNUNCIATOR NOMENCLATURE FROM A TO EX PER DCR 98-0898 EXP 6&8	LLC	RIS	JGD

SCALE NONE — DRAWN J.J. STERRETT

Consumers Energy
PALISADES PLANT

GASEOUS EFFLUENT MONITORING SYSTEM

DWG NO.	DRAWING NO.	REV.
0950	LR-M-223 SH. 2	8

0950M223.002

RED=IN SCOPE FOR LR
BLACK=NOT IN SCOPE

...\dwgrev2-lr\LR-M223-2.DGN 03/21/2005 01:54:43 PM

C84

COLOR TABLE-2 DRIVER-L2

THIS DRAWING IS COLOR CODED FOR LICENSE RENEWAL.

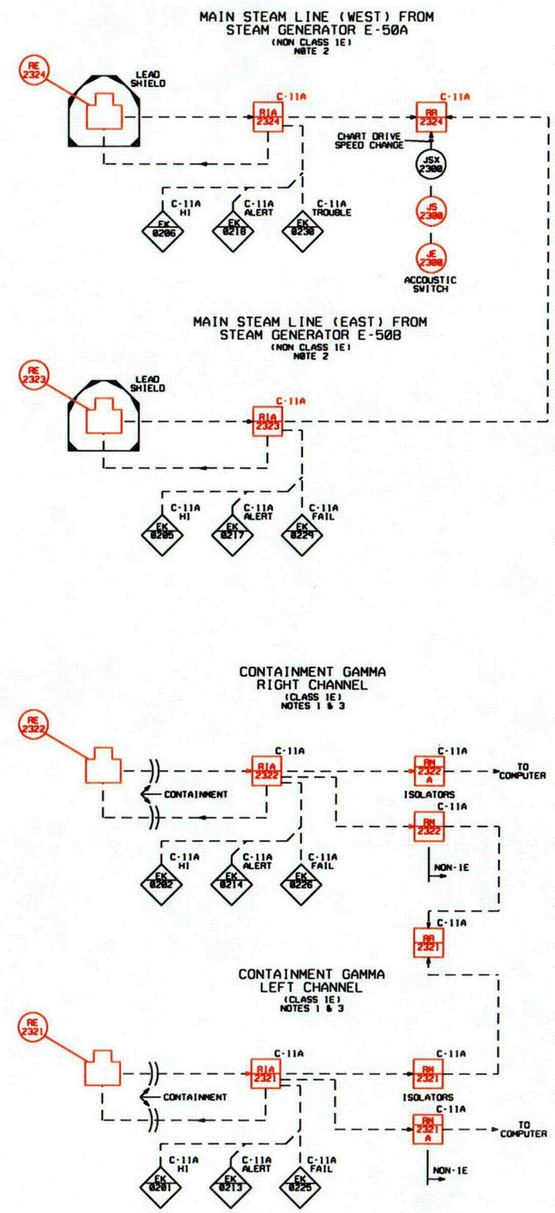

NOTES:

1. REFER TO CAI DRAWING 0338-1-771-51-02-001.CPCO DWG. NO. M-165. SH. 0021 FOR CONTAINMENT GAMMA LOOP DIAGRAM.
2. REFER TO VICTOREEN DRAWINGS CPCO DRAWING NUMBERS M-169. SHTS. 0003 THRU 0007 AND SHTS. 0012 THRU 0014.
3. REFER TO VICTOREEN DRAWINGS CPCO DRAWING NUMBERS M-165. SHTS. 0003 THRU 0015.

FC-494-1
FC-494-5

4	7-13	REVISED ANNUNCIATOR NOMENCLATURE FROM EK-8201, -8202, 8205-8206-8212,8214,8217, -8218, -8223, -8224, -8226, -8238 FROM A E-82,1,2,3,4,13,14,17,18,23 -26,24,30 PER DCR 98-0898 CCP (DCX)	LLC	RIS	JOD
NO	DATE	REVISIONS	DR	CK'D	APP

SCALE NONE — DRAWN J.L. STERRETT

Consumers Energy

PALISADES PLANT

PIPING & INSTRUMENT DIAGRAM
RADIATION MONITORING AND SAMPLING SYSTEMS

SITE NO.	DRAWING NO.	REV.
0950	LR-M-223 SH. 3	4

LR-M-223-3.DGN

RED=IN SCOPE FOR LR
BLACK=NOT IN SCOPE

JS0032184

...\dwgrev2-lr\LR-M223-3.DGN 03/21/2005 01:55:30 PM

C85

COLOR TABLE-3 DRIVER-L3

THIS DRAWING IS COLOR CODED FOR LICENSE RENEWAL.

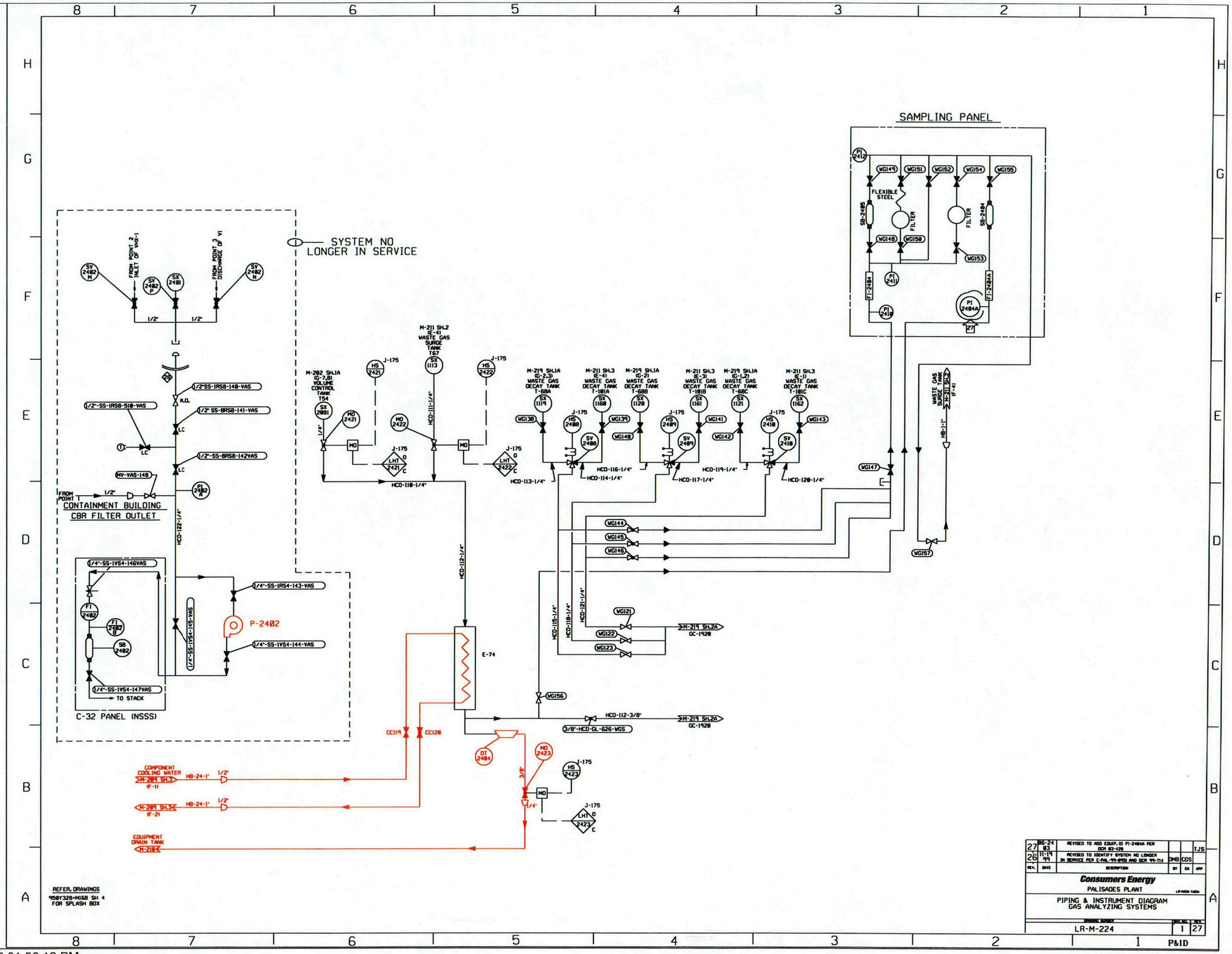

RED=IN SCOPE FOR LR
BLACK=NOT IN SCOPE

...\dwgrev2-lr\LR-M224-1.dgn 03/21/2005 01:56:13 PM

C86

COLOR TABLE-1 DRIVER-L

THIS DRAWING IS COLOR CODED FOR LICENSE RENEWAL.

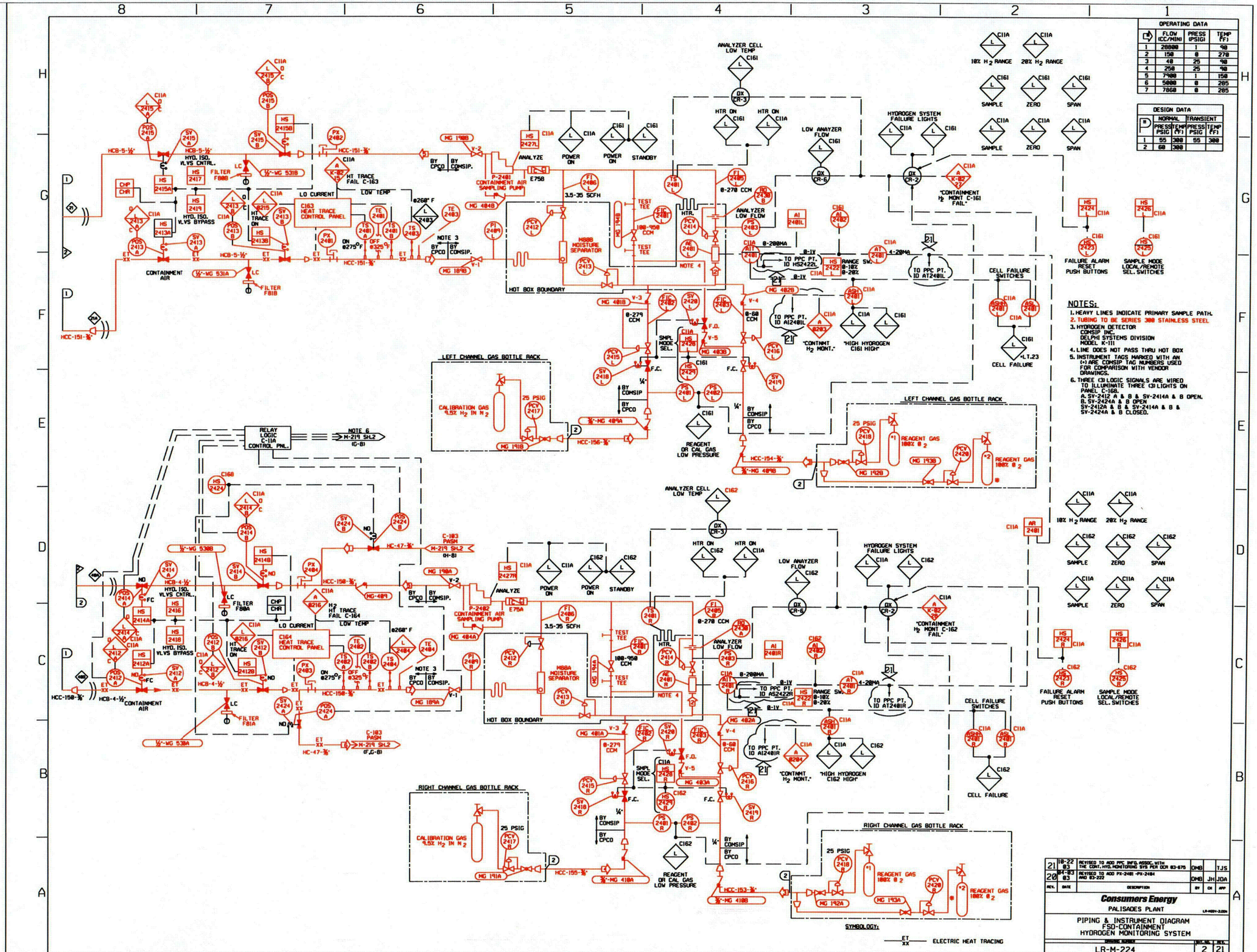

RED=IN SCOPE FOR LR
BLACK=NOT IN SCOPE

...\dwgrev2-lr\LR-M224-2.dgn 03/21/2005 01:57:45 PM

C87

COLOR TABLE-1 DRIVER-L

THIS DRAWING IS COLOR CODED FOR LICENSE RENEWAL.

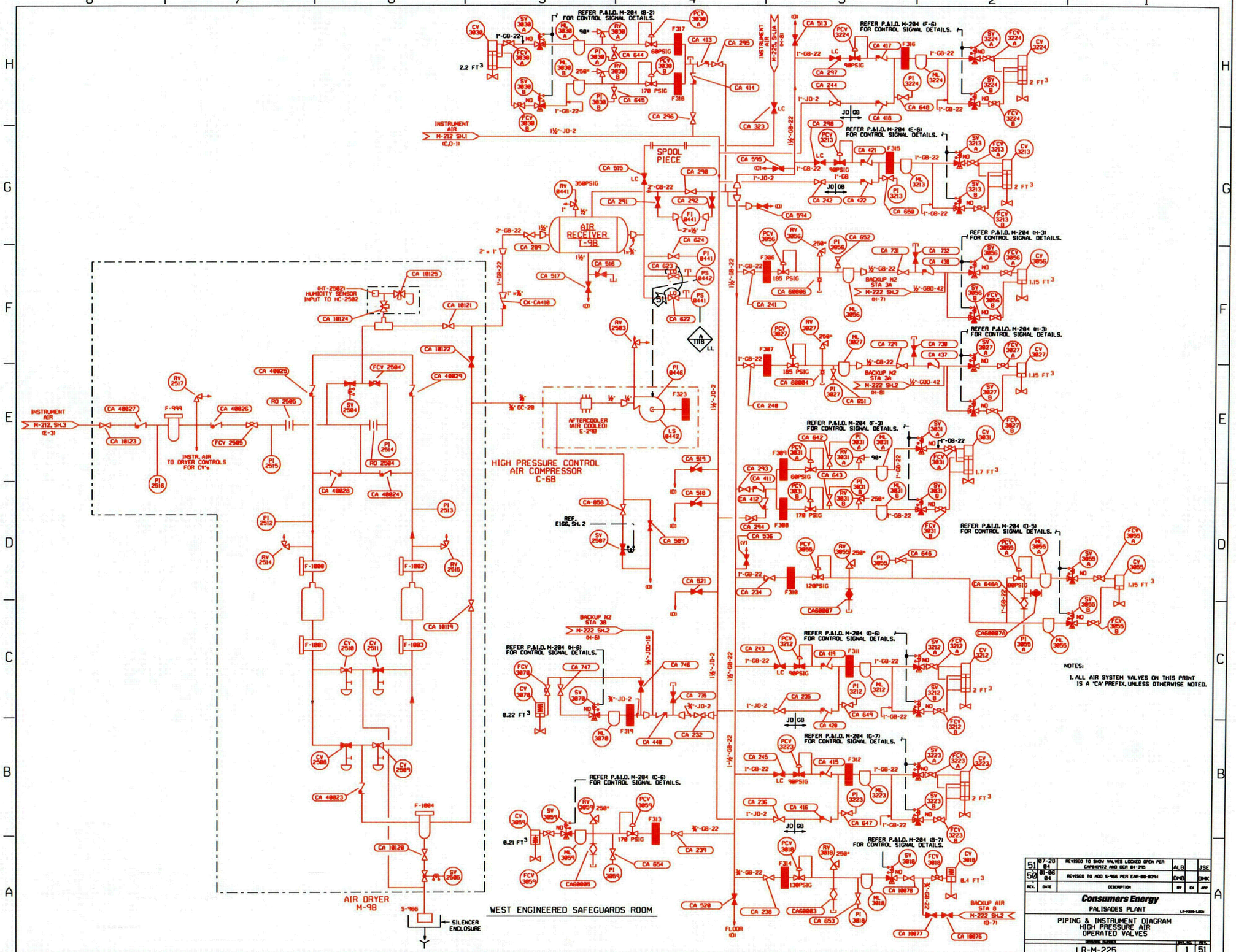

RED=IN SCOPE FOR LR
BLACK=NOT IN SCOPE

...\dwgrev2-lr\LR-M225-1.dgn 03/21/2005 01:58:56 PM

C88

COLOR TABLE-1 DRIVER-L

THIS DRAWING IS COLOR CODED FOR LICENSE RENEWAL.

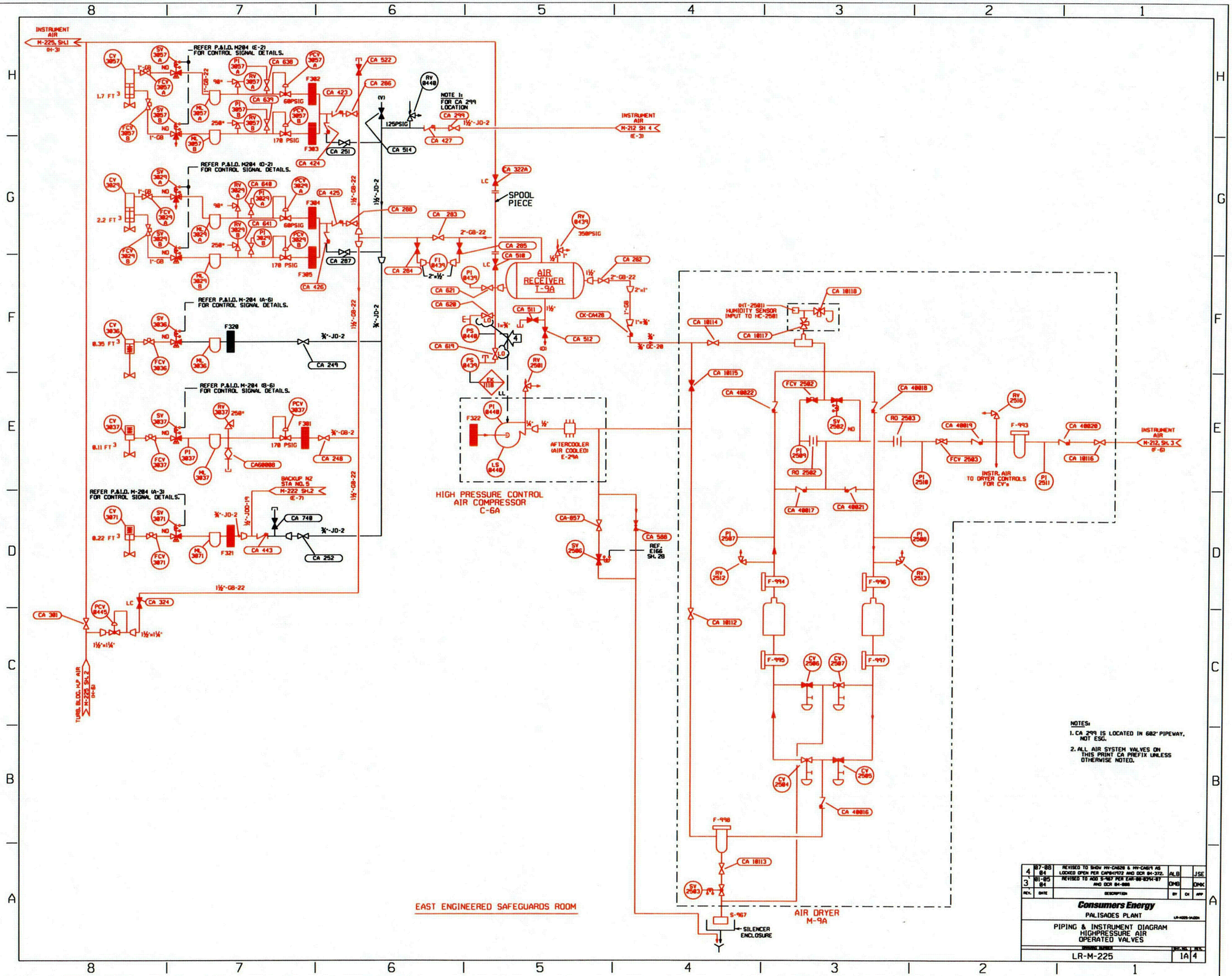

NOTES:

1. CA 299 IS LOCATED IN 602' PIPEWAY, NOT ESG.
2. ALL AIR SYSTEM VALVES ON THIS PRINT CA PREFIX UNLESS OTHERWISE NOTED.

REV.	DATE	DESCRIPTION	BY	CK	APP
4	07-08 04	REVISED TO SHOW MV-CA620 & MV-CA619 AS LOCKED OPEN PER CAP041972 AND OCR 04-372.	ALB		JSE
3	01-05 04	REVISED TO ADD S-967 PER EAR-00-0394-07 AND OCR 04-000	DMB		DMK

Consumers Energy

PALISADES PLANT

LR-M225-1A.DGN

PIPING & INSTRUMENT DIAGRAM
HIGHPRESSURE AIR
OPERATED VALVES

DRAWING NUMBER: LR-M-225 | SHT. NO. 1A | REV. 4

RED=IN SCOPE FOR LR
BLACK=NOT IN SCOPE

...\dwgrev2-lr\LR-M225-1A.dgn 03/21/2005 02:03:39 PM

C89

COLOR TABLE-I DRIVER-L

THIS DRAWING IS COLOR CODED FOR LICENSE RENEWAL.

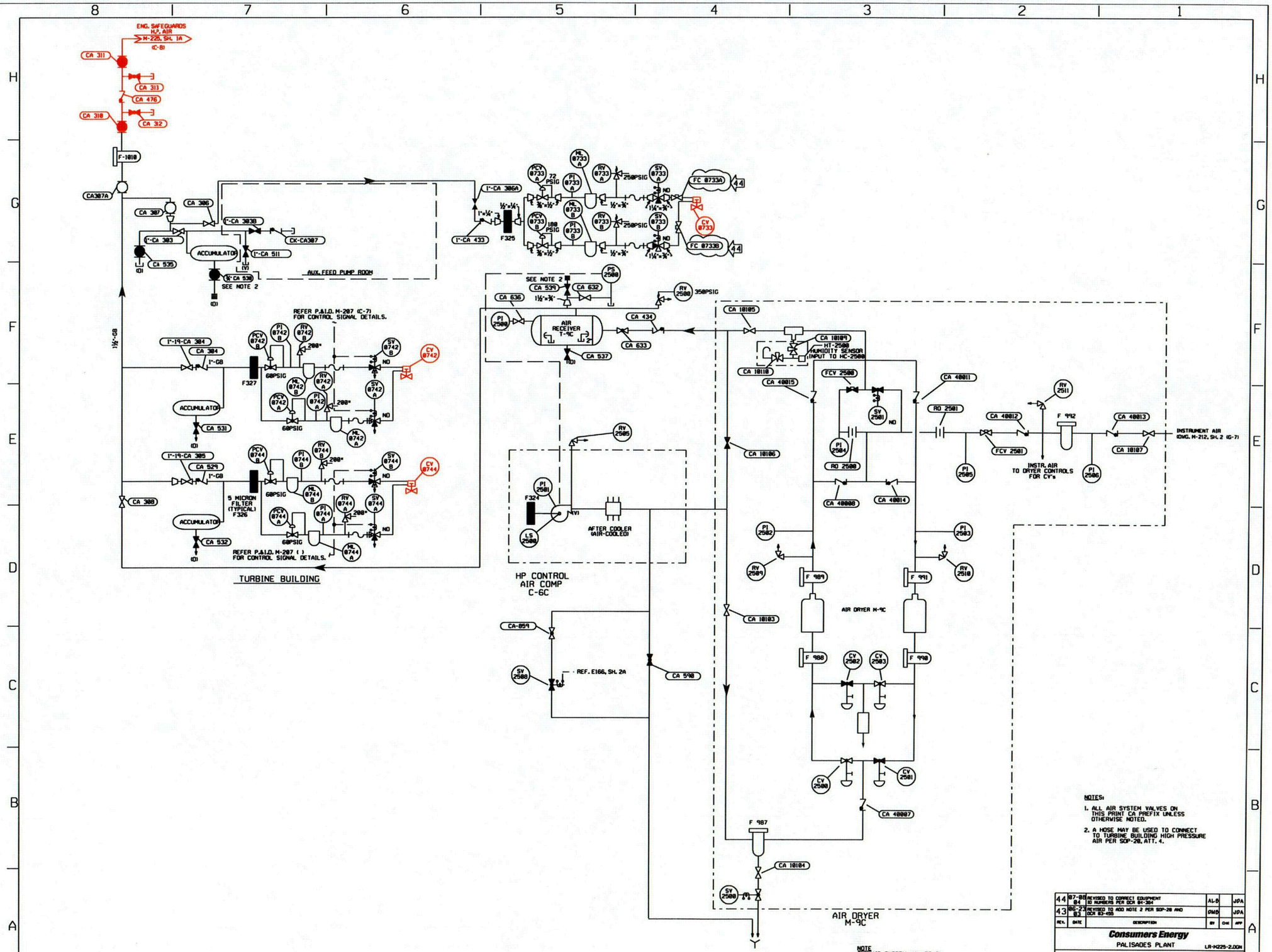

NOTES:

1. ALL AIR SYSTEM VALVES ON THIS PRINT CA PREFIX UNLESS OTHERWISE NOTED.
2. A HOSE MAY BE USED TO CONNECT TO TURBINE BUILDING HIGH PRESSURE AIR PER SOP-28, ATT. 4.

REV.	DATE	DESCRIPTION	BY	CHK	APP
44	07-08-04	REVISED TO CORRECT EQUIPMENT ID NUMBERS PER DCR 04-304	AL-D		JDA
43	06-23-03	REVISED TO ADD NOTE 2 PER SOP-28 AND DCR 03-495	DMD		JDA

Consumers Energy

PALISADES PLANT

LR-M225-2.DGN

PIPING & INSTRUMENT DIAGRAM
HIGH PRESSURE AIR
OPERATED VALVES

DRAWING NUMBER: LR-M-225 | REV. NO. 2 | REV. 44

RED=IN SCOPE FOR LR
BLACK=NOT IN SCOPE

...\dwgrev2-lr\LR-M225-2.DGN 03/21/2005 02:04:20 PM

C90