Draft Submittal

MCGUIRE FEB 2005 EXAM
50-369 & 370/2005-301

FEBRUARY 7 - 15, 2005
FEBRUARY 18, 2005 (written)

1. Reactor Operator Operator Written Exam

1 Pt. Given the following conditions on Unit 1:

- A reactor shutdown is in progress.
- Procedure in effect is OP/1/A/6100/003 Enclosure 4.2 Power Decrease
- Intermediate Range N35 reads 1x10 -9 amps
- Intermediate Range N36 reads 4x10 -11 amps
- Source Range Block light is Lit

The RO depresses Train A and Train B Source Range reset pushbuttons, which results in a Source Range High Flux reactor trip on both source Range channels.

Which one of the following describes the reason for the reactor trip?

A. The reactor trip was valid. N-35 was reading higher than actual power.

B. The reactor trip was valid. N-36 was reading lower than actual power.

C. A reactor trip should have NOT occurred. N-35 was reading higher than actual power.

D. The reactor trip should NOT have occurred. Both Source Range instruments should have been below the SR reactor trip setpoint for *both* the given IR readings.

Bank Question: 1090 ***Answer: B***

1 Pt. Given the following conditions on Unit 1:

- A reactor shutdown is in progress.
- Procedure in effect is OP/1/A/6100/003 Enclosure 4.2 Power Decrease
- Intermediate Range N~~35~~ reads 1x10 -9 amps
- Intermediate Range N~~36~~ reads 4x10 -11 amps
- Source Range Block lightis li t

The RO depresses Train A and Train B Source Range reset pushbuttons, which results in a Source Range High Flux reactor trip on both source Range channels.

Which one of the following describes the reason for the reactor trip?

A. The reactor trip was valid. N-35 was reading ~~higher than actual~~ power. under comp

B. The reactor trip was valid. N-36 was reading ~~lower than~~ actual power. over comp

C. A reactor trip should have NOT occurred. N-35 was reading ~~higher than actual power~~. under comp

D. The reactor trip should NOT have occurred. Both Source Range instruments should have been below the SR reactor trip setpoint for *both* the given IR readings.

Distracter Analysis:. Intermediate Range Channel N-36 is over compensated in the event. As a result when the Source Ranges were "unblocked" you now have 2 channels of Source range instrumentation reading greater than 10+5 cps. The Source Ranges instruments being above 10-5 cps when they are unblocked triggers the reactor trip.

A. **Incorrect**:
Plausible: If the student does not understand the effects of compensation on the Intermediate Range.

B. **Correct Answer**

C. **Incorrect**:
Plausible: If the student does not understand the effects of compensation and the relationship to P-6.

D. **Incorrect**
Plausible: If the student does not understand the relationship between the Intermediate Range and Source Range instruments.

LEVEL: RO & SRO

KA: 000007 EA1.05 4.0/4.1

SOURCE: Bank Braidwood NRC Exam 2002

LEVEL OF KNOWLEDGE: Analysis

AUTHOR: CWS

LESSON: OP-MC-IC-ENB

OBJECTIVES: OP-MC-IC-ENB 6 and 11

REFERENCES: OP-MC-IC-ENB pages 23, 51 and 75

EPE: 007 Reactor Trip

K/A NO.	KNOWLEDGE	IMPORTANCE RO	SRO
EK1	**Knowledge of the operational implications of the following concepts as they apply to the reactor trip:** (CFR 41.8 / 41.10 / 45.3)		
EK1.01	Principles of neutron detection	2.4	2.9
EK1.02	Shutdown margin	3.4	3.8
EK1.03	Reasons for closing the main turbine governor valve and the main turbine stop valve after a reactor trip	3.7	4.0
EK1.04	Decrease in reactor power following reactor trip (prompt drop and subsequent decay)	3.6	3.9
EK1.05	Decay power as a function of time	3.3	3.8
EK1.06	Relationship of emergency feedwater flow to S/G and decay heat removal following reactor trip	3.7	4.1
EK2	**Knowledge of the interrelations between a reactor trip and the following:** (CFR 41.7 / 45.7)		
EK2.01	Sensors and detectors	2.3	2.3
EK2.02	Breakers, relays and disconnects	2.6	2.8
EK2.03	Reactor trip status panel	3.5	3.6
EK2.04	Controllers and positioners	2.3	2.4
EK3	**Knowledge of the reasons for the following as the apply to a reactor trip:** (CFR 41.5 /41.10 / 45.6 / 45.13)		
EK3.01	Actions contained in EOP for reactor trip	4.0	4.6
	ABILITY		
EA1	**Ability to operate and monitor the following as they apply to a reactor trip:** (CFR 41.7 / 45.5 / 45.6)		
EA1.01	T/G controls	3.7	3.4
EA1.02	MFW System	3.8	3.7
EA1.03	RCS pressure and temperature	4.2	4.1
EA1.04	RCP operation and flow rates	3.6	3.7
EA1.05	Nuclear instrumentation	4.0	4.1
EA1.06	Reactor trip (scram): verification that the control and safety rods are in after the trip	4.4	4.5
EA1.07	MT/G trip; verification that the MT/G has been tripped	4.3	4.3
EA1.08	AFW System	4.4	4.3
EA1.09	CVCS	3.2	3.3
EA1.10	S/G pressure	3.7	3.7
EA2	**Ability to determine or interpret the following as they apply to a reactor trip:** (CFR 41.7 / 45.5 / 45.6)		
EA2.01	Decreasing power level, from available indications	4.1	4.3
EA2.02	Proper actions to be taken if the automatic safety functions have not taken place	4.3	4.6
EA2.03	Reactor trip breaker position	4.2	4.4

CLASSROOM TIME (Hours)

NLO	NLOR	LPRO	LPSO	LOR
	2.0	3.0	3.0	2.0

OBJECTIVES

	OBJECTIVE	NLO	NLOR	LPRO	LPSO	LOR
1	State the purpose of the Nuclear Instrumentation System.		X	X	X	
2	Explain why it is necessary to use three ranges of Excore Nuclear Instrumentation.		X	X	X	
3	Explain the operation of the detector used in each range of instrumentation.		X	X	X	
4	Sketch the outputs of each range of Nuclear Instrumentation, to include all indication, control and protective circuits.		X	X	X	
5	Explain why gamma compensation is necessary in the Source Range and Intermediate Range but not in the Power Range.		X	X	X	
6	Describe the methods of gamma compensation used by the Source and Intermediate Ranges.		X	X	X	
7	Describe the effects of 'over' and 'under' compensation on the Intermediate Range.		X	X	X	
8	Explain the functions of the control switches for each range of Nuclear Instrumentation.		X	X	X	X
9	Concerning the channel current comparator and detector current comparator: • Explain the function of each. • List the alarm setpoints for each.		 X X	 X X	 X X	 X
10	Explain the functions of all related bypass and block switches on the Nuclear Instrumentation miscellaneous panels.		X	X	X	X
11	List the Reactor Trips associated with the Nuclear Instrumentation System. (Include setpoints, logic and interlocks)		X	X	X	X

2.2.2 Over Compensation And Under Compensation

Objective # 7

Reference **Figure 7.7**. With the inner chamber voltage set properly, inner chamber gamma current will exactly match outer chamber gamma current and the two will cancel leaving only the neutron current. With inner chamber voltage set too high, inner chamber current will exceed outer chamber gamma current canceling all gamma current plus some of the neutron current. This is "over-compensation". The following are consequences of **over-compensation**:

- The indicated power level will read lower than the actual power level.
- The intermediate range instrument will "come on scale" at a higher source range level producing less overlap between the two ranges.
- During startup, the P-6 permissive will be received later, at a higher actual neutron flux level and the source range will be closer to the 10^5 cps, Hi Level Trip setpoint.
- After a Reactor Trip, power will decay to the P-6 reset sooner than normal.
- Initially, indicated SUR will be higher than actual SUR.

The effects of improper compensation are much more pronounced at low power and become a non-factor prior to taking critical data at 10^{-8} amps.

With inner chamber voltage set too low, inner chamber current will be less than outer chamber gamma current, canceling only a portion of the gamma current. This is "under-compensation". The following are consequences of **under-compensation**:

- The indicated power level will read higher than the actual power level.
- The intermediate range instrument will "come on scale" at a lower source range level producing more overlap between the two ranges.
- During startup, the P-6 permissive will be received earlier, at a lower actual neutron flux level.
- After a Reactor Trip, power will decay to the P-6 reset later than normal and may prevent automatic re-energizing of the source range detectors.
- Initially, indicated SUR will be lower than actual SUR.

2.2.3 Intermediate Range Circuitry

Objective # 4

Reference **Figure 7.8**. The Intermediate Range should normally start to indicate power at a Source Range power level of 10^3 cps and the Source Range should be blocked by the time level is 10^4 cps and Intermediate level is at 10^{-10} amps. The indicating range for the Intermediate Range instrument is 10^{-11} to 10^{-3} amps, which overlaps the entire power range.

The current flow from the intermediate range detectors is too low to be used directly for control purposes so the output feeds a log level amplifier (log amp) for conversion to a usable voltage. The log level amplifier also converts the detector signal to a logarithmic output and drives the bistables, indicators and other circuits.

3.1.4 Setpoints

Objective # 11, 12

- SR High Flux at Shutdown - 1/2 channels 0.5 decade above shutdown counts in Mode 6 (TS Basis 3.9.3) and $\leq$ 5 times shutdown background counts in Modes 3,4&5 (TS Basis 3.3.1).
- SR High Flux Level Rx Trip - 1/2 channels greater than 10^5 cps.
- IR **P-6** - 1/2 channels greater than 10^{-10} Amps, resets at $5X10^{-11}$ amps decreasing. Requires 2/2 channels < setpoint to reset.
- IR High Flux Rod Stop **C-1** - 1/2 channels current equivalent to greater than 20% power.
- IR High Flux Level Rx Trip - 1/2 channels current equivalent to 25% power.
- Power Range Permissive **P-10** - 2/4 channels $\geq$ 10% power, resets when 3/4 channels < 10% power.
- PR Rx Trip Low Range - 2/4 channels $\geq$ 25% power.
- PR Permissive **P-8** - 2/4 channels $\geq$ 48% power, resets when 3/4 channels < 48% power.
- PR Permissive **C-2** - 1/4 channels $\geq$ 103% power.
- PR Overpower Trip High Range - 2/4 channels $\geq$ 109% power.
- PR Positive Rate Trip - 2/4 channels $\geq$ +5% power in 2 seconds.
- PR Channel Deviation - Deviation between Channels.
- PR Upper Section Deviation - Deviation between Upper Detectors and the average of all the Upper Detectors.
- PR Lower Section Deviation - Deviation between Lower Detectors and the average of all the Lower Detectors.

NOTE: For a complete listing of the Protection Permissive Interlocks and Control Permissive Interlocks ("Ps" and "Cs") see the Reactor Protection Lesson Plan (IC-IPE).

7.2 Operating Ranges (01/09/02)

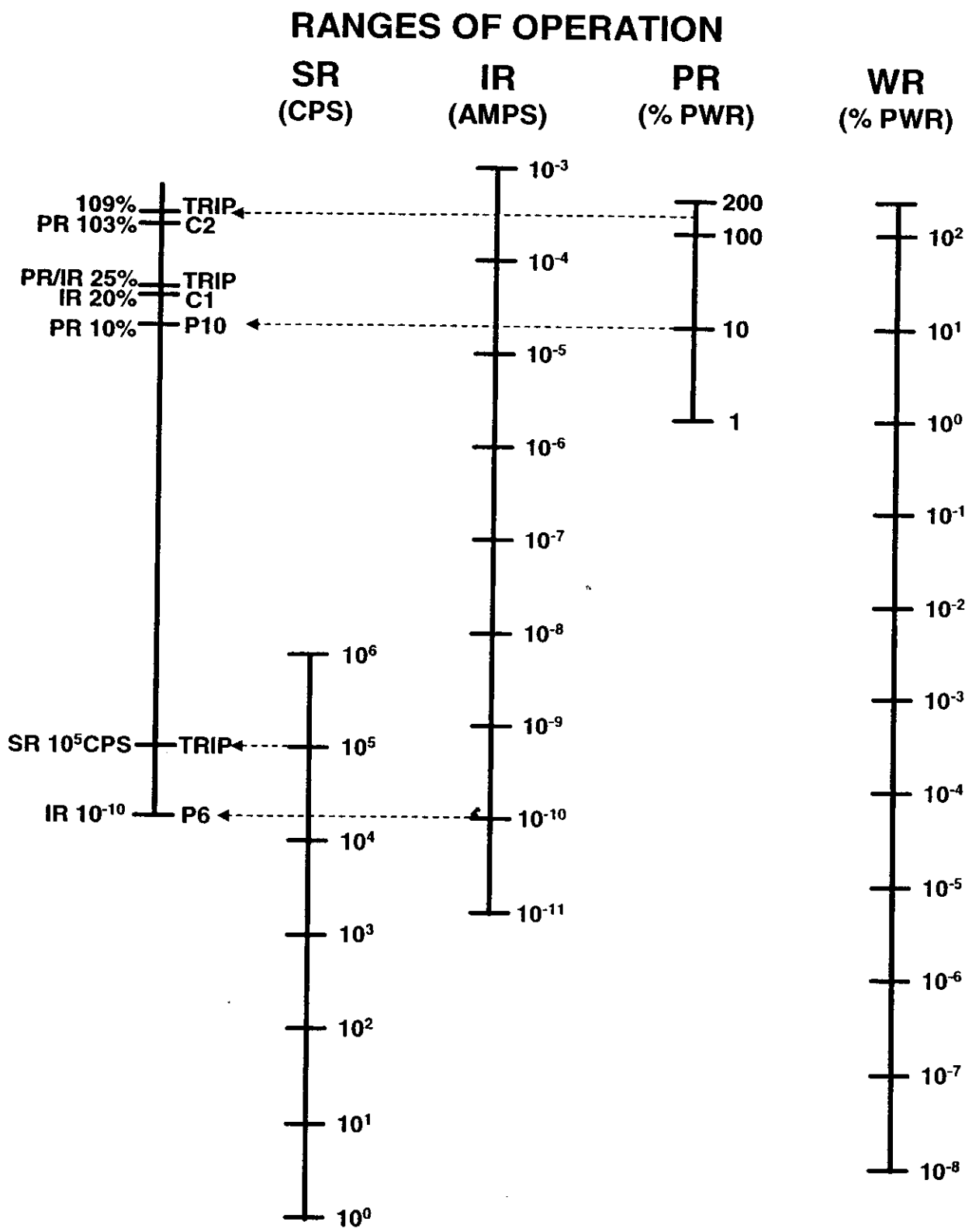

..007.ea1.05 | 7/17/2002

Braidwood 1 | Exam Level R | Mark Question | Print Recor | New Searc | Exit

Question

The following conditions exist:

- A reactor shutdown is in progress.
- Procedure in effect: N-CRD-49C, Reactor Shutdown.
- Intermediate Range (IR) N-35 reads 6.5 x 10-6 %.
- IR N-36 reads 8.5 x 10-4 %.
- Source Range Blocked status light is ON.

The NCO depresses Train A and Train B Source Range (SR) Reset pushbuttons, which results in a SR High Flux reactor trip on both SR Channels.

Which ONE of the following conditions is correct for these conditions ?

Answer: The reactor trip was valid. N-35 was reading lower than actual power.

Distracter 1 A reactor trip should NOT have occurred. N-36 was reading higher than actual power.

Distracter 2 The reactor trip was valid. N-36 was reading higher than actual power.

Distracter 3 The reactor trip should NOT have occurred, both SR Instruments should have been below the SR reactor trip setpoint for the given IR readings.

Distracter Analysis:

Answer: Tech Reference(s):System Desc. 48, 3.4.2, 3.5.1 & Fig WPS-N101

Distracter 1:

Distracter 2:

Distracter 3:

1 Pt. Unit 1 is at 100% RTP in when the following indications are observed:

- Charging flow is increasing slowly
- Pressurizer pressure is decreasing rapidly
- Pressurizer level is approximately stable
- NC T-ave is stable

Which one of the following developing events is consistent with the above indications?

A. Main Steam leak

B. NC Cold Leg leak

C. Reactor Vessel Head Vent leak

D. Pzr Safety Valve Leak

Bank Question: 1091 **Answer: D**

1 Pt. Unit 1 is at 100% RTP in when the following indications are observed:

- Charging flow is increasing slowly
- Pressurizer pressure is decreasing rapidly
- Pressurizer level is approximately stable
- NC T-ave is stable

Which one of the following developing events is consistent with the above indications?

A. ~~**Main Steam leak**~~

B. **NC Cold Leg leak**

C. **Reactor Vessel Head Vent leak**

D. **Pzr Safety Valve Leak**

Distracter Analysis:. All four accidents would cause pressure to decrease. The steam leak and the NC System leakage would only cause pressure to decrease if Pzr level decreased. The head vent leak would still be a liquid leak vs a steam leak, similar to a cold leg leak.. Only the Safety Valve leak would be a high energy/ low mass event.

A. **Incorrect**:
Plausible:

B. **Incorrect**:
Plausible:

C. **Incorrect**
Plausible

D. **Correct**

LEVEL: RO & SRO

KA: 000008 AA2.22 (3.4/3.6)

SOURCE: NEW

LEVEL OF KNOWLEDGE: Analysis

AUTHOR: CWS

LESSON: OP-MC-AP-10

OBJECTIVES: OP-MC-AP-10, obj 1

REFERENCES: AP/1(2)/A/5500/10 Background Document pg 37 & 38

APE : **008 Pressurizer (PZR) Vapor Space Accident (Relief Valve Stuck Open)**

AA2. **Ability to determine and interpret the following as they apply to the Pressurizer Vapor Space Accident: (CFR: 43.5 / 45.13)**

AA2.01	RCS pressure and temperature indicators and alarms	3.9	4.2
AA2.02	PZR spray valve position indicators and acoustic monitors	3.9	4.1
AA2.03	PORV position indicators and acoustic monitors	3.9	3.9
AA2.04	High-temperature computer alarm and alarm type	3.2	3.4
AA2.05	PORV isolation (block) valve switches and indicators	3.9	3.9
AA2.06	PORV logic control under low-pressure conditions	3.3	3.6
AA2.07	Feedwater flow indicators and pump controllers	2.4	2.4
AA2.08	Rod position indicators	2.1	2.2
AA2.09	PZR spray block valve controls and indicators	3.6	3.7
AA2.10	High-pressure injection valves and controllers	3.6	3.6
AA2.11	Turbine bypass header pressure indicators	2.3	2.4
AA2.12	PZR level indicators	3.4	3.7
AA2.13	High-pressure safety injection pump flow indicator, ammeter, and controller	3.8	3.9
AA2.14	Saturation temperature monitor	4.2	4.4
AA2.15	ESF control board, valve controls, and indicators	3.9	4.2
AA2.16	RCS in-core thermocouple indicators; use of plant computer for interpretation	3.8	4.1
AA2.17	Steam dump valve controller (position)	2.5	2.7*
AA2.18	Computer indications for RCS temperature and pressure	3.0	3.0*
AA2.19	PZR spray valve failure, using plant parameters	3.4	3.6
AA2.20	The effect of an open PORV on code safety, based on observation of plant parameters PER J. LACKA 9-30-04	3.4	3.6
AA2.21	The feed flow of different channels, using the feed regulator valve controller and indicators	2.1	2.2*
AA2.22	Consequences of loss of pressure in RCS; methods for evaluating pressure loss	3.8	4.2
AA2.23	Criteria for throttling high-pressure injection after a small LOCA	3.6	4.3
AA2.24	Value at which turbine bypass valve maintains header pressure after a reactor trip	2.6	2.6*
AA2.25	Expected leak rate from open PORV or code safety	2.8	3.4
AA2.26	Probable PZR steam space leakage paths other than PORV or code safety	3.1	3.4
AA2.27	Effects on indicated PZR pressure and/or level of sensing line leakage	2.9	3.2
AA2.28	Safety parameter display system indications	3.3*	3.9
AA2.29	The effects of bubble in reactor vessel	3.9	4.2
AA2.30	Inadequate core cooling	4.3	4.7

CLASSROOM TIME (Hours)

NLO	NLOR	LPRO	LPSO	LOR
		1.0	1.0	1.0

OBJECTIVES

	OBJECTIVE	NLO	NLOR	LPRO	LPSO	LOR
1	Concerning AP/1/A/5500/10 (NC System Leakage Within the Capacity of Both NV Pumps): • State the purpose of the AP • Recognize the symptoms that would require implementation of the AP. AP1001			X	X	X
2	Given scenarios describing accident events and plant conditions, evaluate the basis for any caution, note, or step. AP1002			X	X	X

After the reactor is tripped, S/I is initiated manually. Manually initiating S/I avoids challenging automatic S/I actuation. If there is an ATWS while attempting to trip the reactor, S/I is not manually initiated to buy some time attempting to shutdown the reactor prior to FWI. However, if an auto SI setpoint has been reached and auto SI hasn't occurred, it should be manually initiated.

If T-ave is < 200°F and Pzr level can't be maintained, direction is given to go to AP/19, Loss of ND or ND System leakage, while continuing with this AP. This AP or AP/19 should get the leak isolated. Also, a loss of Pzr level is likely to result in a loss of ND and AP/19 needs to be addressed for the loss of shutdown cooling concern.

REFERENCES:
PIP M-96-2513

CASE II STEP 4:

PURPOSE:

Ensure Step 3 remains a continuous action step.

DISCUSSION:

System conditions and the NC System leak rate may change over time. This case is written using strategies assuming ECCS injection, Phase A isolation, etc. are not needed. If NC inventory becomes a problem, direction is given to return to Step 3 to ensure inventory is maintained or the appropriate procedure is entered to handle the situation.

CASE II STEP 5:

PURPOSE:

Maintain NC System pressure as required.

DISCUSSION:

If NC leakage is such that pressure can't be maintained (i.e., Pzr vapor space leak), then NC loss of NC Subcooling and possibly auto SI may occur. For either of these conditions, AP10 is not appropriate. For these scenarios direction is given to go to the appropriate procedure (E-0, AP/34, AP/19) for handling the "LOCA" vs. leakage.

Mode 3 CLA isolation is the determining factor on whether to go to E-0 or AP/34. Per the WOG ARG-2 Guideline (our AP/34), the CLAs were intentionally not utilized for a recovery from a Shutdown LOCA event in order to simplify both the Shutdown LOCA analysis and procedural guidance. For this reason, the accumulators are not needed and are not used to assist in

restoring core cooling during a Shutdown LOCA event. The EPs assume the CLAs are in service. Therefore, if the CLAs are not isolated, direction is given to go to E-0 and if they are isolated, direction is given to go to AP/34.

After the reactor is tripped, S/I is initiated manually. Manually initiating S/I avoids challenging automatic S/I actuation. If there is an ATWS while attempting to trip the reactor, S/I is not manually initiated to buy some time attempting to shutdown the reactor prior to FWI. However, if an auto SI setpoint has been reached and auto SI hasn't occurred, it should be manually initiated.

If T-ave is < 200°F and Pzr pressure can't be maintained, direction is given to go to AP/19, Loss of ND or ND System leakage, while continuing with this AP. This AP or AP/19 should get the leak isolated. Also, a loss of Pzr level is likely to result in a loss of ND and AP/19 needs to be addressed for the loss of shutdown cooling concern.

CASE II STEP 6:

PURPOSE:

Provide a kick-out to AP/01, Steam Leak, if entry into this AP was based on mis-diagnosing a steam leak as NC leakage.

DISCUSSION:

A steam leak which cools the NC System will cause shrinkage of NC water, causing decreasing Pzr level and pressure. These symptoms are also consistent with NC leaks. What differentiates a steam leak is the decreasing NC temperature and reactor power greater than turbine power (turbine power + steam leak power = reactor power). A one degree NC System cooldown is worth about 90 gallons of shrinkage (at normal operating temperatures). If shrinkage indicates a steam leak, then AP/01 should be referred to. If all the level decrease is due to the steam leak, this AP can be exited. Note 1% Pzr level contains about 120 gallons (about 1.3°F cooldown).

CASE II STEP 7:

PURPOSE:

Alert plant personnel of the NC system leakage.

DISCUSSION:

1 Pt. Given the following conditions on Unit 1:

Subsequently: →

- '1A' NV pump is tagged for ~~maintenance~~ REPAIR
- A small break LOCA occurred in containment
- SI has actuated on both trains
- 'B' NV pump tripped on overcurrent
- Containment Pressure is 3.5#

PLANT RESPONSE DUE

Which one of the following describes the ~~effect of~~ the above ~~conditions~~? EVENTS

A. Cooling would be supplied to the reactor coolant pump lower bearings and seals.

B. Cooling would be lost to the reactor coolant pump lower bearings and seals.

C. Cooling would be lost to just the reactor coolant pump lower bearings but NOT the seals.

D. Cooling would be lost to just the reactor coolant pump seals but NOT the reactor coolant pump lower bearings.

Bank Question: 1092 ***Answer: B***

1 Pt. Given the following conditions on Unit 1:

- '1A' NV pump is tagged for maintenance
- A small break LOCA occurred in containment
- SI has actuated on both trains
- 'B' NV pump tripped on overcurrent
- Containment Pressure is 3.5#

Which one of the following describes the effect of the above conditions?

A. Cooling would be supplied to the reactor coolant pump lower bearings and seals.

B. Cooling would be lost to the reactor coolant pump lower bearings and seals.

C. Cooling would be lost to just the reactor coolant pump lower bearings but NOT the seals.

D. Cooling would be lost to just the reactor coolant pump seals but NOT the reactor coolant pump lower bearings.

Distracter Analysis:. On small break LOCAs we are not directed by procedure to monitor RCP lower bearing temperatures.

A. **Incorrect**:
Plausible: Student might think thermal barriers will still be cooled by KC with containment pressure above 3 psig.

B. **Correct**:

C. **Incorrect**:
Plausible: If the student thinks the lower bearings are cooled by KC.

D. **Incorrect**
Plausible: If the student does not realize seal injection has been lost.

LEVEL: RO & SRO

KA: 000009 EK3.14 3.1/3.2

SOURCE: NEW

LEVEL OF KNOWLEDGE: Comprehensive

AUTHOR: CWS

LESSON: OP-MC PS NCP

OBJECTIVES: OP-MC-PS-NCP- Obj. 4

REFERENCES: OP-MC-PS- NCP page 23
OP-MC-PSS-KC page 19

EPE: 009 Small Break LOCA

K/A NO.	KNOWLEDGE	IMPORTANCE RO	SRO
EK1	**Knowledge of the operational implications of the following concepts as they apply to the small break LOCA:** (CFR 41.8 / 41.10 / 45.3)		
EK1.01	Natural circulation and cooling, including reflux boiling	4.2	4.7
EK1.02	Use of steam tables	3.5	4.2
EK2	**Knowledge of the interrelations between the small break LOCA and the following:** (CFR 41.7 / 45.7)		
EK2.01	Valves	2.2	2.3
EK2.02	Pumps	2.3	2.6*
EK2.03	S/Gs	3.0	3.3*
EK2.04	Sensors and detectors	2.3	2.6
EK3	**Knowledge of the reasons for the following responses as the apply to the small break LOCA:** (CFR 41.5 / 41.10 / 45.6 / 45.13)		
EK3.01	CCW System automatic isolation on high delta flow/ temperature to RCP thermal barrier	3.1*	3.6*
EK3.02	Opening excess letdown isolation valve	2.8*	3.2*
EK3.03	Reactor trip and safety initiation	4.1	4.4
EK3.04	Starting additional charging pumps	4.1	4.3
EK3.05	CCWS radiation alarm	3.4	3.8
EK3.06	RCS inventory balance	3.9	4.0
EK3.07	Increasing indication on CCWS process monitor: indicates in-leakage of radioactive liquids	3.3	3.6
EK3.08	PTS limits on RCS pressure and temperature - NC and FC	3.6	4.1
EK3.09	Closing CCW surge tank vent	3.1*	3.4*
EK3.10	Observation of PZR level	3.4	3.6
EK3.11	Dangers associated with inadequate core cooling	4.4	4.5
EK3.12	Letdown isolation	3.4	3.7
EK3.13	Stopping the affected RCP	3.4	3.7
EK3.14	Monitoring RCP lower bearings	3.1	3.2
EK3.15	Closing of RCP thermal barrier outlet valves	3.2	3.2
EK3.16	Containment temperature, pressure, humidity and level limits	3.8	4.1
EK3.17	Automatic isolation of containment	4.0	4.3
EK3.18	Monitoring containment radiation levels	3.9	4.3
EK3.19	Operator initiation of containment vent isolation/indication	3.6?	3.9?
EK3.20	Tech-Spec leakage limits	3.5	4.3
EK3.21	Actions contained in EOP for small break LOCA/leak	4.2	4.5
EK3.22	Maintenance of heat sink	4.4	4.5
EK3.23	RCP tripping requirements	4.2	4.3
EK3.24	ECCS throttling or termination criteria	4.1	4.6
EK3.25	Monitoring of in-core T-cold	3.6	3.9
EK3.26	Maintenance of RCS subcooling	4.4	4.5
EK3.27	Manual depressurization or HPI recirculation for sustained high pressure	3.6	3.8
EK3.28	Manual ESFAS initiation requirements	4.5	4.5

CLASSROOM TIME (Hours)

NLO	NLOR	LPRO	LPSO	LOR
2.0	2.0	3.0	3.0	

OBJECTIVES

	OBJECTIVE	NLO	NLOR	LPRO	LPSO	LOR
1	Concerning the Reactor Coolant Pumps/Motors: • State the purpose of the Reactor Coolant Pump. • State the purpose of the motor flywheel. • State the purpose of the NC Pump thermal barrier and heat exchanger. • State the purpose of the NC Pump Motor Oil Lift System. • State the purpose of the NC Pump seals.	X	X	X	X	
2	Discuss the basic operation of the Anti Reverse Rotation Device associated with each motor.	X	X	X	X	
3	Describe two reasons for using an Anti Reverse Rotation Device on a NC Pump.		X	X	X	X
4	Discuss any operational concerns with: • Loss of Thermal Barrier Heat Exchanger flow while maintaining Seal Injection flow • Loss of Seal Injection flow while maintaining Thermal Barrier Heat Exchanger flow. • Loss of Seal Injection with a loss of Thermal Barrier Heat Exchanger flow.	X	X	X	X	X
5	Describe the operation of the Thrust Bearing including how it functions as a pump to move oil through the oil cooler.	X	X	X	X	
6	Concerning the Oil Lift Pumps: • Explain the normal start/stop operation • Describe what happens to the running Oil Lift Pump if the associated NCP failed to start? (Safety breaker re-opens)		X	X	X	X
7	Discuss the various cooling water supplies to the Reactor Coolant Pump and Motor and the origin of each supply.	X	X	X	X	

Objective # 4

A **loss of thermal barrier heat exchanger flow while maintaining seal injection** would result in a slight increase in pump lower bearing and seal temperatures, but these temperatures would be expected to remain below any pump operational limitations.

A **loss of seal injection while maintaining thermal barrier heat exchanger flow** would result in reversed flow through the thermal barrier. The thermal barrier heat exchanger cools the hot NCS water as it flows between the pump shaft and labyrinth seal prior to entering the radial bearing and the seal area of the pump. An increase in pump lower bearing temperature, seal temperatures and No. 1 seal leakoff flow would be expected, however, the thermal barrier heat exchanger is designed to maintain these parameters within operating limitations (assuming KC inlet temperature $\leq$ 105°F). The main concern here is the unfiltered reactor coolant flowing to the seals, which may cause degradation of the seal surfaces and possible seal failure.

A **simultaneous loss of seal injection and thermal barrier heat exchanger flow** would result in rapidly increasing pump lower bearing and seal temperatures with increased seal leakoff flow. Temperatures would increase until NCP parameters require the pump to be stopped by the operator. The No. 1 seal would fail due to the high temperature fluid between the sealing surfaces no longer cooling and lubricating the seals resulting in seal failure and would require closing of the No. 1 seal return valve. The No. 2 seal would become the primary seal but eventually would also fail due to the same high temperature conditions. At high temperatures #1 Seal Leakoff increases to approximately 6-10 gpm. Thermally caused transients will cause flashing at the seal discharge, which will cause seal instability. The #2 Seal also becomes unstable under 2 phase flow.

Objective # 9

The **Pump Radial Bearing** is a water lubricated journal-type pump bearing (radial bearing), mounted above the thermal barrier heat exchanger. It has a self-aligning spherical seat and maintains radial alignment of the pump. It is normally cooled and lubricated by seal injection water. Bearing temperature is indicated on the Main Control Board. A high bearing temperature alarm is provided in the Control Room.

Under very low NCS pressures, it may be necessary to open NCP No. 1 seal bypass valve (under certain conditions) to ensure adequate flow through this bearing.

2.4.4. KC leakage is minimized by:

- Extensive use of weld ends.
- Diaphragm valves.
- Packless stem valves.
- Mechanical seals on KC pumps.
- Drains and reliefs discharged to KC drain tank.

2.5. NCP Thermal Barrier

Provides a temperature barrier between the NCS water and NCP internals. If KC is lost to the thermal barrier heat exchanger, the operator must monitor NCP lower bearing temperature to ensure that seal injection flow is providing adequate cooling to the bearing. KC flow through the thermal barrier must be maintained to cool the NCS water entering the NCP internals to prevent overheating the NCP lower bearing and seals if normal seal injection is lost.

2.6. Component Cooling Valves

2.6.1. KC Pump Miniflow Valves (KC-51 & 54)

Controlled from Control Room MC-11 by a three position pushbutton OPEN/AUTO/CLOSE. In automatic, it ensures minimum flow through operating KC pump. Miniflow returns to the surge tank. These valves automatically open at 1000 gpm decreasing and close at 1500 gpm increasing.

2.6.2. Auxiliary Building Non-Essential Supply Header Isolation (KC-50 & 53).

These valves are located in the discharge crossover lines of KC Heat Exchanger. They are controlled from Control Room MC-11 by two position OPEN/CLOSE pushbuttons. Valves close on a Safety Injection (S_s) signal.

2.6.3. Reactor Building Non-Essential Supply Header Isolation (KC-228 & 230).

These valves are located in discharge lines of KC Heat Exchanger. Controlled from Control Room MC-11 by two position OPEN/CLOSE pushbuttons. These valves close on a Phase B (S_p) signal. This ensures flow to NCP's as long as possible. A Control Room alarm is received if both valves are open at the same time indicating a loss of train separation.

2.6.4. Auxiliary Building Non-Essential Return Isolation Valves (KC-1 & 2).

Controlled from Control Room MC-11 by two position OPEN/CLOSE pushbuttons. Closes on S_s signal.

2.6.5. Reactor Building Non-Essential Return Isolation Valves (KC-3 & 18).

These are controlled from Control Room MC-11 by two position, OPEN/CLOSE pushbuttons. A Control Room alarm is received if both valves are open at the same time indicating a loss of train separation. They close on a S_p signal.

1 Pt. For Modes 1-3, ECCS Safety Analysis has a required position for 1ND-30A (Train A ND to Hot Leg Isolation) and 1ND-15B (Train B ND to Hot Leg Isolation).

(for this valve)

Which one of the following is the required position and the basis for this required position?

A. **Closed**
Required for train separation. To prevent common mode failure.

B. **Closed**
Required for single failure criteria. If one ND Pump inoperable, the other ND Pump must inject into 2 intact cold legs to meet required flow.

C. **Open**
Required for single failure criteria. If one ND Pump is inoperable, the other ND Pump must be capable of injecting into all 4 cold legs

D. **Open**
Required for either ND Pump to be capable of injecting into all 4 hot legs

---

Bank Question: 1093 ***Answer: C***

1 Pt. For Modes 1-3, ECCS Safety Analysis has a required position for 1ND-30A (Train A ND to Hot Leg Isolation) and 1ND-15B (Train B ND to Hot Leg Isolation).

Which one of the following is the required position and the basis for the required position?

A. **Closed**
Required for train separation.

B. **Closed**
Required for single failure criteria. If one ND Pump inoperable, the other ND Pump must inject into 2 intact cold legs to meet required flow.

C. **Open**
Required for single failure criteria. If one ND Pump is inoperable, the other ND Pump must be capable of injecting into all 4 cold legs

D. **Open**
Required for either ND Pump to be capable of injecting into all 4 hot legs

---

Distracter Analysis The normal correct alignment for ESFAS is to have train separation. For large break LOCA analysis, to meet design flow during single failure and a cold leg break, 1 ND pump has to be aligned to the remaining 3 intact loops to meet this flow.

A. **Incorrect:**
Plausible
B. **Incorrect:**
Plausible:
C. **Correct:**
D. **Incorrect**
Plausible:

LEVEL: RO & SRO

KA: 000011 EK2.02 2.6*/2.7*

SOURCE: New

LEVEL OF KNOWLEDGE: Comprehension

AUTHOR: CWS

LESSON: OP-MC-PS-ND

OBJECTIVES: OP-MC-PS-ND Obj. 9

REFERENCES: OP-MC-PS-ND pages 27, 39, 55, and 61.

EPE: 011 Large Break LOCA

K/A NO.	KNOWLEDGE	IMPORTANCE RO	IMPORTANCE SRO
EK1	**Knowledge of the operational implications of the following concepts as they apply to the Large Break LOCA :** (CFR 41.8 / 41.10 / 45.3)		
EK1.01	Natural circulation and cooling, including reflux boiling.	4.1	4.4
EK2	**Knowledge of the interrelations between the and the following Large Break LOCA:** (CFR 41.7 / 45.7)		
EK2.01	Valves	2.4	2.4
EK2.02	Pumps	2.6*	2.7*
EK3	**Knowledge of the reasons for the following responses as the apply to the Large Break LOCA:** (CFR 41.5 / 41.10 / 45.6 / 45.13)		
EK3.01	Verifying main steam isolation valve position	3.4*	3.5*
EK3.02	Feedwater isolation	3.5*	3.7*
EK3.03	Starting auxiliary feed pumps and flow, ED/G, and service water pumps	4.1	4.3
EK3.04	Placing containment fan cooler damper in accident position	4.0*	4.3
EK3.05	Injection into cold leg	4.0*	4.1
EK3.06	Actuation of Phase A and B during LOCA initiation	4.3*	4.3*
EK3.07	Stopping charging pump bypass flow	3.5*	3.6*
EK3.08	Flowpath for sump recirculation	3.9	4.1
EK3.09	Maintaining D/Gs available to provide standby power	4.2	4.5
EK3.10	PTS limits on RCS pressure and temperature	3.7	3.9
EK3.11	NC and PC	3.3?	3.4?
EK3.12	Actions contained in EOP for emergency LOCA (large break)	4.4	4.6
EK3.13	Hot-leg injection/recirculation	3.8	4.2
EK3.14	RCP tripping requirement	4.1	4.2
EK3.15	Criteria for shifting to recirculation mode	4.3	4.4
EA1	**Ability to operate and monitor the following as they apply to a Large Break LOCA:** (CFR 41.7 / 45.5 / 45.6)		
EA1.01	Control of RCS pressure and temperature to avoid violating PTS limits	3.7*	3.8*
EA1.02	Reflux boiling sump level indicators	3.8	4.1
EA1.03	Securing of RCPs	4.0	4.0
EA1.04	ESF actuation system in manual	4.4	4.4
EA1.05	Manual and/or automatic transfer of suction of charging pumps to borated source	4.3	3.9
EA1 06	D/Gs	4.2	4.2
EA1.07	Containment isolation system	4.4	4.4
EA1.08	Valves to prevent water hammer	2.7*	2.6*
EA1.09	Core flood tank initiation	4.3	4.3
EA1.10	AFW and SWS pumps	4.1	3.8
EA1.11	Long-term cooling of core	4.2	4.2
EA1.12	Long-term containment of radioactivity	4.1	4.4

OBJECTIVES

	OBJECTIVE	NLO	NLOR	LPRO	LPSO	LOR
8	Explain the operation and flowpaths for normal cooldown, emergency injection and recirculation phases for the ND System. PSND008	X	X	X	X	X
9	Given a Limit and Precaution associated with the ND System, discuss its basis and when it applies. PSND009		X	X	X	X
10	Concerning AP/1or 2/A/5500/19; Loss of ND or ND System Leakage, explain the purpose of the AP PSND010			X	X	
11	Concerning the Technical Specifications related to the ND System: • Given the LCO title, state the LCO including the composition of an RHR loop listed in the LCO section of Bases (including any COLR values) and applicability. • For any LCO's that have action required within one hour, state the action. • Given a set of parameter values or system conditions, determine if any Tech Spec LCO's is(are) not met and any action(s) required within one hour. • Given a set of parameter values or system conditions and the appropriate Tech Spec, determine required action(s). • Discuss the bases for a given Tech. Spec. LCO or Safety Limit. *** SRO ONLY** PSND011			X X X X	X X X X X	X X X X *

- Maintain a minimum ND HX outlet temperature of greater than or equal to 65^0F until after the Reactor Vessel Head is unbolted.

  Basis: Value was reduced to 65^0F from 80^0F as a result of SER90-17 " RCS temperature below analyzed value. The temperature limits thermal stress on the reactor vessel head bolts.

- **If** the 1A(1B) ND AHU does not start when their associated pump starts, inform the WCC SRO.

  Basis: SLC16.9.16 places a temperature limit on the ND pump room at 145^0 F. If the temperature exceeds this limit by more than 30^0 F, the equipment in the room must be declared inoperable within 4 hours.

- Closing 1ND-30A (Train A ND to hot leg Isol) or 1ND-15B (Train B ND to hot leg Isol) in Modes 1,2, or 3 make both trains of ND inoperable.

  Basis: Either Train of ND must be capable of discharging to all four NCS loops. In order for this to be possible, both ND30A and ND-15B must be open.

- During Mid Loop operation (Less than or equal to 15" NC System level), total ND Flow is limited to less than or equal to 3000 gpm. (Commitment to INPO observation of Jan 1992).

  Basis: This flow limit is to ensure that the ND pump suction does not experience vortexing (air being drawn into the pump suction).

- **When** NC System level is below the Reactor Vessel flange, careful consideration must be given to any activity which could adversely affect ND System operation. Evaluate activities for potential impact on:

  - ND System (pumps, valves, instrumentation, support systems, power supplies).
  - Makeup paths to NC System
  - Potential NC inventory loss (breaches to system, NV System alignment changes, chemistry sampling, filling and draining activities).
  - Operation parameters (ND flow and temperature, NC System level).

  Basis: Heightened awareness must be exercised during outage situations. ND could be adversely affected by any of the listed activities, possibly resulting in a loss or reduction of ND capabilities.

- Maintain KC flow to the ND HX(s) greater than 2000 GPM anytime NC System temperature is greater than or equal to 200^0F.

  Basis: This will ensure that the KC liquid inside or leaving the ND heat exchanger will not be steam/vapor which can produce water hammer in the lines. McGuire has had problems with this in the past.

ND-18 and ND-33 are used during residual heat removal mode of operation to control bypass flow around ND Heat Exchanger B and A respectively. Opening ND-18 and ND-33 would allow the respective train's ND heat exchanger to be bypassed during the ECCS recirculation mode if a loss of instrument air were to occur (since bypass valve ND-34 fails open upon a loss of instrument air). Therefore, these valves are required to remain closed during Modes 1 - 3, when the ECCS system is required. If opened during Mode 4 for residual heat removal temperature control, they shall be capable of manual closing upon ECCS actuation. If opened for residual heat removal mode, these valves shall be closed prior to swapover to sump recirculation mode of ECCS operation, for the respective ND train to be operable. Valve status is also provided to the OAC.

2.3.6 ND-34 (A & B ND HX Bypass)

This valve can be operated from MC11 or the ASP by a manual loader. This valve is used in conjunction with ND-14 and ND-29 to control NCS cooldown rate and temperature. ND-34 will fail open on a loss of Instrument Air (VI). ND-34 is regulated to maintain a constant return flow to the NCS. A constant flow rate allows the ND pumps to continuously operate on a more efficient part of their performance curve. Flow through this return line is higher during the initial stages of NCS cooldown to limit the ND System heatup rate, and thus thermal shock to the ND heat exchangers. This valve is not required for the unit to achieve cooldown and is therefore not safety related.

2.3.7 ND-15B (Train B ND to Hot Leg Isol), ND-30A (Train A ND to Hot Leg Isol)

These motor operated valves are controlled from the ND section of MC11 in the Control Room by open/close pushbuttons. These "fail as is" valves provide cross tie isolations for the ND Trains. These valves have no auto open/close control features. These valves are opened in standby readiness, but closed in cold leg recirc.

On an ECCS actuation, the ND System must be capable of providing flow to all four NCS loops (even with single failure). By having ND-15B and ND-30A open, either ND pump is capable of supplying all four NCS loops. Therefore, closing either ND-15B or ND-30A in Mode 1, 2, or 3 will make both ND trains inoperable. An alarm is actuated on the BOP panel whenever either of these valves reaches the "closed" position.

2.3.8 ND-67B (B ND Pump & B HX Mini-flow) and ND-68A (A ND Pump & A HX Mini-flow)

These safety related, normally closed motor operated valves are interlocked to automatically open on a train related pump start when ND flow through its train related ND heat exchanger falls below the 750 gpm setpoint (as sensed by NDFT5250 for pump A and NDFT5260 for pump B). **When flow reaches the 1400 gpm setpoint or if the associated pump stops, the valve will close.**

2.3.9 ND-35 (ND System to FWST Isolation)

This valve is an 8" manually operated gate valve. ND-35 is used during outage periods to transfer water from the reactor coolant system or refueling canal to the refueling water storage tank. ND-35 is also used as a gravity flow path from the FWST to the NC system during loss of ND events.

Even though this actuator is somewhat different from most other actuators in the plant, it is identical in the way it de-energizes the motor once the valve is fully closed. It functions off a torque switch. Even though the valve is fully closed, the "close" circuit may energize if you depress the close pushbutton. For this valve, the close pushbutton should not be depressed in an attempt to close the valve when the valve is already indicating closed. All other available means to verify position, i.e., no flow, computer indication, pushbutton indicating light, remote position indication, should be used to verify position. **IF** it is necessary to operate the valve manually, existing guidelines for SAFETY RELATED valves applies, the valve shall be operated electrically after it has been operated manually to verify operability. HOWEVER, WHEN AN EP OR AP DIRECTS THE OPERATOR TO "CLOSE" A VALVE WHEN THERE IS A QUESTION AS TO WHETHER OR NOT THE VALVE IS CLOSED - THE EP OR AP IS THE CONTROLLING DOCUMENT AND IS TO BE COMPLIED WITH.

5.3 Inspection and Enforcement Information Notice 87-01 and SER2-87 Reduced ECCS Flow Paths

Several plants have inadvertently been placed in unanalyzed conditions due to isolating portions of the ND System when the system was required to be operable. **ECCS Safety Analysis assumes that the injection from one ND pump is sent to all 4 cold legs.** Two identified occurrences which lead to this are:

1) Isolating the cross ties between the trains
2) Isolating one train's discharge header

At McGuire ND-15B and ND-30A perform the function of isolating the ties between the ND trains. Closure of either of these two valves places us in an unanalyzed condition in Modes 1,2, and 3. The alignment for standby readiness verifies ND-15B and ND-30A are open. **In addition, Bakelite tags adjacent to the controls for these valves alert the operator that closure of ND-15B and ND-30A renders both trains of ND inoperable in Modes 1,2,and 3.**

5.4 2-C96-2634 and 2-C96 3250 ND pressurization from CLA

These two PIPS document problems CNS was having with a Cold Leg Accumulator (CLA) pressurizing the ND System discharge header up to the ND pump discharge check valve by means of the common ECCS discharge check valves leaking. The ND discharge line was indicating 600 psig pressure while the upstream side of the check valve was indicating the static pressure of the FWST which indicated that the ND discharge check valve and the mini-flow valves were holding. The relief valves in the ND System discharge line were not the pop open design so they would leak by at about 1gpm requiring frequent make up to the CLA. The effects of the high discharge pressure on the pumps and mini-flow line and possible N_2 saturated water migrating into the ND System were evaluated and it was determined that the ND System would still be able to perform its intended function so was therefore operable. CNS has replaced the leaking valves and problem has been corrected.

7.1, ND System Composite (09/21/98)

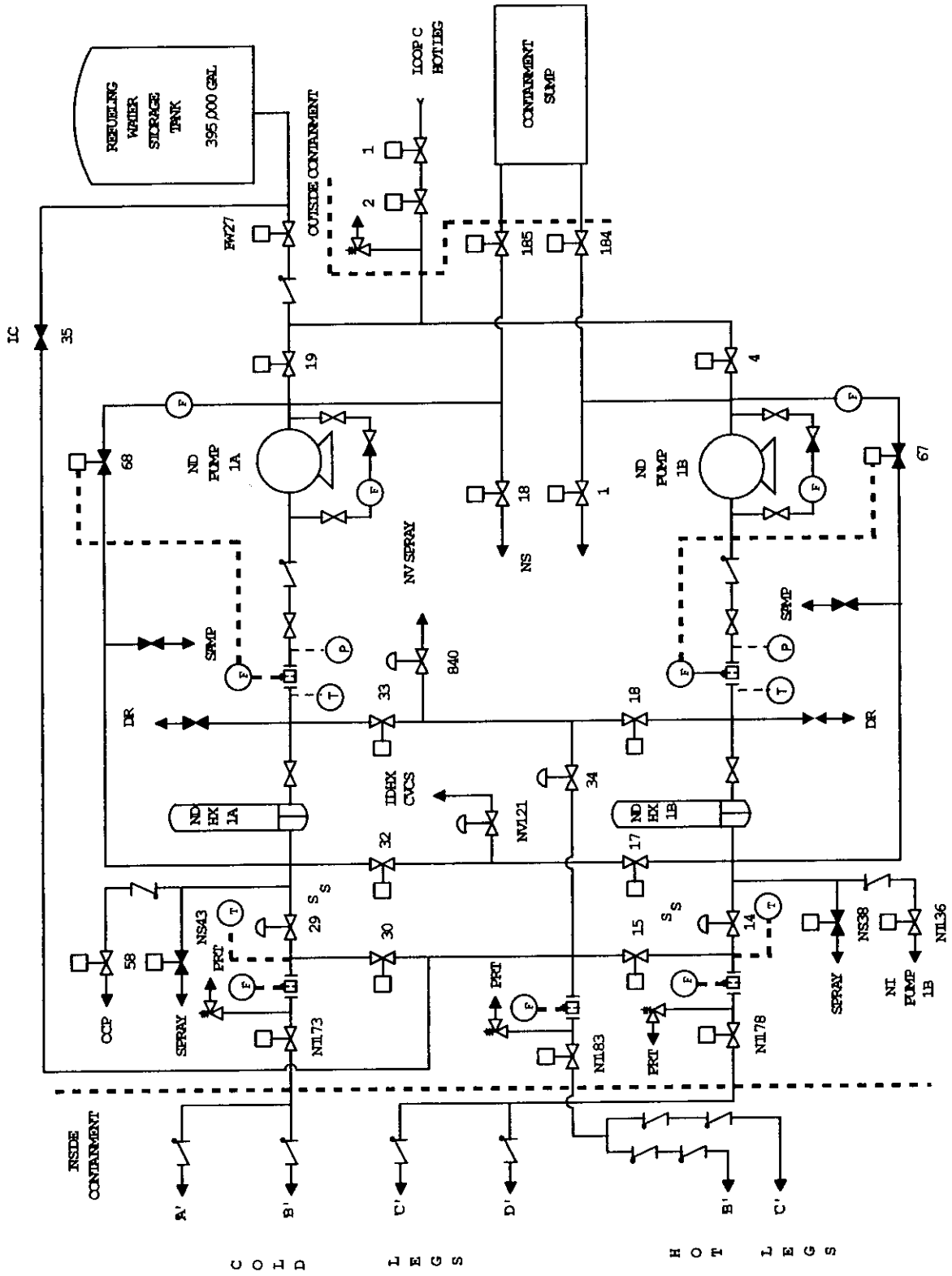

..011.ek2.02 | 5/15/2000

Prairie Island 1 | Exam Level R | Mark Question | Print Recor | New Searc | Exit

Question

For a Large-Break LOCA such as the double-ended shear of an RCS cold leg crossover pipe, which of the following may result from continued RCP operation after the RCP tripping criteria are met?

Answer:

Degradation/damage of the RCP #1 seals.

Distracter 1

RCP overspeed resulting in flywheel failure.

Distracter 2

Core uncovery is deeper and longer.

Distracter 3

RCP flow could reduce effectiveness of ECCS injection

Distracter Analysis:

Answer:

Distracter 1- Incorrect, having generator action with breaker closed reduces this danger.
Distracter 2- Incorrect, SBLOCA reason; on LBLOCA like this, core uncovers in 5 sec.
Distracter 3- Incorrect, RCP flow has no impact based on injection points

Distracter 1:

Distracter 2:

Distracter 3:

1 Pt. Given the following conditions on Unit 1.

- Mode 3 with Shutdown Banks A and B withdrawn.
- 1RN-252 (RB Non Ess. Sup. Cont. Outside Isol.) fails closed
- All reactor coolant pumps (RCP) ~~are~~ were secured in response to the failure of 1RN-252

Which one of the following ~~are~~ actions satisfy the required **immediate** technical specification actions as a result of stopping all Reactor Coolant Pumps?

A. **Manually insert Shutdown Banks A and B**
Stop any dilution
Initiate action to restore one Reactor Coolant loop

B. **Ensure Pressurizer water level is < 90%**
Ensure steam generator water/NC $\Delta t \leq$ 50 degrees T
De-energize all CRDMs

C. **Ensure Pressurizer water level is < 92%**
Stop any dilution
Ensure steam generator water/NC $\Delta t \leq$ 50 degrees T

D. **De-energize all CRDMs**
Stop any dilution
Initiate action to restore one Reactor Coolant loop

How do you do D? Trip RX?

Bank Question: 1094 ***Answer: D***

1 Pt. Given the following conditions on Unit 1.

- Mode 3 with Shutdown Banks A and B withdrawn.
- 1RN-252 (RB Non Ess. Sup. Cont. Outside Isol.) fails closed
- All reactor coolant pumps (RCP) are secured in response to the failure of 1RN-252

Which one of the following are the required **immediate** technical specification actions as a result of stopping all Reactor Coolant Pumps?

A. **Manually insert Shutdown Banks A and B.**
Stop any dilution
Initiate action to restore one Reactor Coolant loop

B. **Ensure Pressurizer water level is < 90%.**
Ensure steam generator water/NC $\Delta t \leq$ 50 degrees
De-energize all CRDMs

C. **Ensure Pressurizer water level is < 92%.**
Stop any dilution
Ensure steam generator water/NC $\Delta t \leq$ 50 degrees

D. **De-energize all CRDMs**
Stop any dilution
Initiate action to restore one Reactor Coolant loop

Distracter Analysis:. These are the immediate actions per Tech Specs for no loops in operation during Mode 3.

A. **Incorrect**: All CRDMs must be de-energized, not just inserted.
Plausible: Manually inserting rods will result in all rods inserted,

B. **Incorrect**:
Plausible: Pressurizer water level would be a concern when all RCPs have been lost, but only prior to starting the first reactor coolant pump in Mode 3.

C. **Incorrect**:
Plausible: 2/3 of the three parameters are not a concern

D. **Correct**

LEVEL: RO & SRO

KA: 000015 G2.1.12 2.9/4.0

SOURCE: NEW

LEVEL OF KNOWLEDGE: Memory

AUTHOR: CWS

LESSON: OP-MC-PS-NCP

OBJECTIVES: OP-MC-PS-NCP- Obj. 16

REFERENCES: OP-MC-PS- NCP page 51
Tech Spec 3.4.5

2.1 Conduct of Operations (continued)

2.1.9 **Ability to direct personnel activities inside the control room.**
(CFR: 45.5 / 45.12 / 45.13)
IMPORTANCE RO 2.5 SRO 4.0

2.1.10 **Knowledge of conditions and limitations in the facility license.**
(CFR: 43.1 / 45.13)
IMPORTANCE RO 2.7 SRO 3.9

2.1.11 **Knowledge of less than one hour technical specification action statements for systems.**
(CFR: 43.2 / 45.13)
IMPORTANCE RO 3.0 SRO 3.8

2.1.12 **Ability to apply technical specifications for a system.**
(CFR: 43.2 / 43.5 / 45.3)
IMPORTANCE RO 2.9 SRO 4.0

2.1.13 **Knowledge of facility requirements for controlling vital / controlled access.**
(CFR: 41.10 / 43.5 / 45.9 / 45.10)
IMPORTANCE RO 2.0 SRO 2.9

2.1.14 **Knowledge of system status criteria which require the notification of plant personnel.**
(CFR: 43.5 / 45.12)
IMPORTANCE RO 2.5 SRO 3.3

2.1.15 **Ability to manage short-term information such as night and standing orders.**
(CFR: 45.12)
IMPORTANCE RO 2.3 SRO 3.0

2.1.16 **Ability to operate plant phone, paging system, and two-way radio.**
(CFR: 41.10 / 45.12)
IMPORTANCE RO 2.9 SRO 2.8

2.1.17 **Ability to make accurate, clear and concise verbal reports.**
(CFR: 45.12 / 45.13)
IMPORTANCE RO 3.5 SRO 3.6

OBJECTIVES

	OBJECTIVE	NLO	NLOR	LPRO	LPSO	LOR
16	Concerning the Technical Specifications associated with the Reactor Coolant Pumps:					
	• Given the LCO Title, state the LCO (including any COLR values) and applicability.			X	X	X
	• For any LCO's that have action required within one hour, state the action.			X	X	X
	• Given a set of parameter values or system conditions, determine if any Tech Spec LCO(s) is (are) not met and any action(s) required within one hour.			X	X	X
	• Given a set of plant parameters or system conditions and the appropriate Tech Specs, determine required actions.			X	X	X
	• Discuss the basis for a given Tech Spec LCO or Safety Limit.				X	*
	*** SRO ONLY**					

Objective #16

4.0 TECHNICAL SPECIFICATIONS

4.1 ITS 3.3.1 Reactor Trip System (RTS) Instrumentation

4.2 ITS 3.4.4 RCS Loops – Modes 1 and 2

4.3 ITS 3.4.5 RCS Loops – Mode 3

4.4 ITS 3.4.6 RCS Loops – Mode 4

4.5 ITS 3.4.7 RCS Loops – Mode 5, Loops Filled

4.6 ITS 3.5.5 (ECCS) Seal Injection Flow

5.0 INDUSTRY EVENTS

5.1 2B NC Pump Failure (Phase-to-Ground Short).

The phase-to-ground short of the 2B NC Pump motor was due to a design problem with the stator coils. There are 108 coil end turns on the motor stator and as it turns out only 20 of them were tied back to prevent movement. The remaining 88 end turns would flex when the motor was started. During previous motor inspections, cracking was noted in the insulation in these areas. An aggressive plan was developed to change out the motors one at a time during refueling outages. Unfortunately, it seems we started a little too late. Since all motors have been repaired and properly tested.

5.2 NC Pump and PZR Spray Control

At McGuire, the "A" and "B" loops provide spray to the pressurizer which is connected to "B" hot leg. Because of the Pressurizer connection to the "B" hot leg, the "B" loop will normally supply spray flow even when all other reactor coolant pumps (RCPs) have been secured. The "A" loop normally supplies spray flow when operated in parallel with two other loops. Westinghouse analysis in 1976 indicated the following pump combinations (as defined for McGuire plant) will provide Pressurizer spray flow:

Condition	RCPs in Operation	Spray Valve Open	Spray Effectiveness
(I)	Any 3 or 4	A or B	Better to Best
(II)	B + C	B	Best
	B + A	A or B	Best
	B + D	B	Best
(III)	B	A or B	Better
(IV)	B + C	A	Good
	B + D	A	Good
(V)	A + C	A	Marginal
	A + D	A	Marginal

3.4 REACTOR COOLANT SYSTEM (RCS)

3.4.5 RCS Loops — MODE 3

LCO 3.4.5 Three RCS loops shall be OPERABLE, and either:

a. Three RCS loops shall be in operation when the Rod Control System is capable of rod withdrawal; or

b. One RCS loop shall be in operation when the Rod Control System is not capable of rod withdrawal.

----------NOTE----------
All reactor coolant pumps may be de-energized for ≤ 1 hour per 8 hour period provided:

a. No operations are permitted that would cause introduction of coolant into the RCS with boron concentration less than required to meet SDM of LCO 3.1.1 and maintain Keff < 0.99; and

b. Core outlet temperature is maintained at least 10°F below saturation temperature.

APPLICABILITY: MODE 3.

ACTIONS

CONDITION	REQUIRED ACTION	COMPLETION TIME
A. One or two required RCS loop(s) inoperable.	A.1 Restore required RCS loop(s) to OPERABLE status.	72 hours
B. Required Action and associated Completion Time of Condition A not met.	B.1 Be in MODE 4.	12 hours

(continued)

ACTIONS (continued)

CONDITION	REQUIRED ACTION	COMPLETION TIME
C. One or two required RCS loop(s) not in operation and Rod Control System capable of rod withdrawal.	C.1 Restore required RCS loop(s) to operation. OR C.2 De-energize all control rod drive mechanisms (CRDMs).	1 hour 1 hour
D. Three required RCS loops inoperable. OR No RCS loop in operation.	D.1 De-energize all CRDMs. AND D.2 Suspend operations that would cause introduction of coolant into the RCS with boron concentration less than required to meet SDM of LCO 3.1.1. AND D.3 Initiate action to restore one RCS loop to OPERABLE status and operation.	Immediately Immediately Immediately

SURVEILLANCE REQUIREMENTS

SURVEILLANCE		FREQUENCY
SR 3.4.5.1	Verify required RCS loops are in operation.	12 hours
SR 3.4.5.2	Verify steam generator secondary side water levels are ≥ 12% narrow range for required RCS loops.	12 hours
SR 3.4.5.3	Verify correct breaker alignment and indicated power are available to the required pumps that are not in operation.	7 days

1 Pt. Given the following conditions on Unit 1

- A KC leak on Auxiliary building non essential header has occurred
- AP/1A/5500/021 Loss of KC or KC System Leakage has been implemented.
- The Auxiliary Building non essential header must remain isolated
- "VCT HI TEMP" alarm has been received.
- AP/1/A/550/021 Enclosure 6, VCT Hi Temperature actions have been implemented per the foldout page.

A strategy of Enclosure 6 is to start the PD pump and secure the NV pump(s).

Which one of the following describes the basis for this strategy?

A. PD pump does not recirculate to the VCT, and therefore would not add additional heat.

B. The NV pump oil coolers are cooled by KC auxiliary building non essential header.

C. Lower charging flow can be maintained with the PD pump.

D. The PD pump requires less NPSH than the NV pumps.

Bank Question: 1095 ***Answer: A***

1 Pt. Given the following conditions on Unit 1

- A KC leak on Auxiliary building non essential header has occurred
- AP/1A/5500/021 Loss of KC or KC System Leakage has been implemented.
- The Auxiliary Building non essential header must remain isolated
- "VCT HI TEMP" alarm has been received.
- AP/1/A/550/021 Enclosure 6, VCT Hi Temperature actions have been implemented per the foldout page.

A strategy of Enclosure 6 is to start the PD pump and secure the NV pump(s).

Which one of the following describes the basis for this strategy?

A. PD pump does not recirculate to the VCT, and therefore would not add additional heat.

B. The NV pump oil coolers are cooled by KC auxiliary building non essential header.

C. Lower charging flow can be maintained with the PD pump.

D. The PD pump requires less NPSH than the NV pumps.

Distracter Analysis:

A. Correct:

B. Incorrect:
Plausible: Student may think that NC pump is cooled by KC on the non essential header. NV pumps are actually cooled by RN on the essential headers.

C. Incorrect:
Plausible: The NV pump flow can be maintained lower than PD pump flow.

D. Incorrect
Plausible: This is not the reason for swapping to the PD pump.

LEVEL: RO & SRO

KA: 000026 G2.4.11 3.4/3.6

SOURCE: NEW

LEVEL OF KNOWLEDGE: Comprehensive

AUTHOR: CWS

LESSON: OP-MC-AP-21

OBJECTIVES: OP-MC-AP-21- Objs. 2 & 3

REFERENCES: AP/1/A/5500/021 Loss of KC or KC System Leakage Enclosure 6
AP-21 Loss of KC Background Document pages 4 and 5

2.4 Emergency Procedures /Plan (Continued)

2.4.9 **Knowledge of low power / shutdown implications in accident (e.g. LOCA or loss of RHR) mitigation strategies.**
(CFR: 41.10 / 43.5 / 45.13)
IMPORTANCE RO 3.3 SRO 3.9

2.4.10 **Knowledge of annunciator response procedures.**
(CFR: 41.10 / 43.5 / 45.13)
IMPORTANCE RO 3.0 SRO 3.1

2.4.11 **Knowledge of abnormal condition procedures.**
(CFR: 41.10 / 43.5 / 45.13)
IMPORTANCE RO 3.4 SRO 3.6

2.4.12 **Knowledge of general operating crew responsibilities during emergency operations.**
(CFR: 41.10 / 45.12)
IMPORTANCE RO 3.4 SRO 3.9

2.4.13 **Knowledge of crew roles and responsibilities during EOP flowchart use.**
(CFR: 41.10 / 45.12)
IMPORTANCE RO 3.3 SRO 3.9

2.4.14 **Knowledge of general guidelines for EOP flowchart use.**
(CFR: 41.10 / 45.13)
IMPORTANCE RO 3.0 SRO 3.9

2.4.15 **Knowledge of communications procedures associated with EOP implementation.**
(CFR: 41.10 / 45.13)
IMPORTANCE RO 3.0 SRO 3.5

2.4.16 **Knowledge of EOP implementation hierarchy and coordination with other support procedures.**
(CFR: 41.10 / 43.5 / 45.13)
IMPORTANCE RO 3.0 SRO 4.0

2.4.17 **Knowledge of EOP terms and definitions.**
(CFR: 41.10 / 45.13)
IMPORTANCE RO 3.1 SRO 3.8

CLASSROOM TIME (Hours)

NLO	NLOR	LPRO	LPSO	LOR
		1.0	1.0	1.0

OBJECTIVES

	OBJECTIVE	NLO	NLOR	LPRO	LPSO	LOR
1	Explain the purpose for AP/21 (Loss of KC or KC System Leakage). AP21001			X	X	X
2	Analyze the mitigating strategy (major actions) contained in the procedure. AP21002			X	X	X
3	Given scenarios describing accident events and plant conditions, evaluate the basis for any caution, note, or step. AP21003			X	X	X
4	Given scenarios describing accident events and plant conditions, evaluate conditions which require application of continuous action steps. AP21004			X	X	X

2) "NC pump trip criteria". Isolation of the reactor bldg non-essential header or loss of KC pumps may lead to NC pump trip criteria due to loss of cooling to motor bearings. Since bearing temperatures will slowly increase, this step needs to be a continuous action and is placed on the foldout page. Westinghouse calculations predict at least ten minutes of loss of KC cooling prior to reaching NC pump trip criteria on the bearing temperatures (refer to PIP M-94-1376 for calculations and McGuire plant trip Feb/96 due to loss of KC to NC pumps, where it took 33.5 minutes to reach trip criteria).

3) "ND pump trip and flow isolation criteria" is included to stop ND pump and isolate ND flow to affected ND/KC Hx if KC cooling is lost and NC temperature is >150F. A loss of KC while on RHR can cause KC water to boil in the ND Hx. This could lead to water hammers and other problems when the KC pump is subsequently restored. The ND cross-tie valves are also closed, since ND flow across cross-tie could occur if both ND trains were in service. If ND letdown were in service, closing the ND cross-tie ensures letdown flow does not continue to heat-up the KC water.

If ND temp is above approx 160F in ND Hx, voiding in Hx tubes or ND high pt will occur if at mid-loop. ND high pt is 762' (line to NS-38). Top of Hx tubes is 761'5. Mid loop elev is 740'2.25 (740'2.5 on unit 2). The difference between mid-loop and high pt is 21.8 ft. At 180F, this is equal to a vacuum of 9.18psi (21.8/(0.01651*144)) or 14.7 – 9.18 = 5.5psia. Sat temp is approx 176F. To avoid reaching sat temp in Hx or at high pt, ND pumps will be stopped at 150F (17F margin to account for instr error and operator response time). If ND pump is stopped at 150F, a subsequent start of ND pump should not cause water hammer. Note also that stopping ND pumps will preclude excessive heatup and swell of KC water in Hx. If KC temp got too high (above sat temp), voiding of KC water in HX could also occur. Note also that design temp of KC piping downstream of Hx is 160F, so stopping ND pump will reduce risk of challenging temp limit of piping when KC restarted (although any challenge would be short lived). ND pump mech seal cooling will also be lost; continued operation of ND pump at high temperatures could cause problems with ND pump. The design temp of the seal is 190F and the ND pump instruction manual says the seal temperatures should be 160-180F during operation.

4) "KC pump trip criteria" is included so that if KC pumps cavitate, enclosure 2 is used to isolate the affected train from the non-essential headers. Isolating the non-essential headers protects them from draining through a large leak on affected train. Since the tripped KC pumps are no longer providing cooling to the non-essential headers, this will not further degrade cooling to these headers. Enclosure 2 also provides guidance to quickly swap trains if cooling to the reactor bldg header is lost. Loss of cooling to the reactor bldg header will lead to tripping NC pumps and tripping the reactor unless an intact KC train is aligned to cool this header.

5) "VCT high temperature" is included to address concerns with loss of cooling to the aux bldg non-essential header. Enclosure 6 is used to address these concerns. Step 44 also references Encl 6 if the aux bldg header has lost cooling. This enclosure ensures normal and ND letdown are isolated. It also addresses VCT heatup due to loss of

2) "NC pump trip criteria". Isolation of the reactor bldg non-essential header or loss of KC pumps may lead to NC pump trip criteria due to loss of cooling to motor bearings. Since bearing temperatures will slowly increase, this step needs to be a continuous action and is placed on the foldout page. Westinghouse calculations predict at least ten minutes of loss of KC cooling prior to reaching NC pump trip criteria on the bearing temperatures (refer to PIP M-94-1376 for calculations and McGuire plant trip Feb/96 due to loss of KC to NC pumps, where it took 33.5 minutes to reach trip criteria).

3) "ND pump trip and flow isolation criteria" is included to stop ND pump and isolate ND flow to affected ND/KC Hx if KC cooling is lost and NC temperature is >150F. A loss of KC while on RHR can cause KC water to boil in the ND Hx. This could lead to water hammers and other problems when the KC pump is subsequently restored. The ND cross-tie valves are also closed, since ND flow across cross-tie could occur if both ND trains were in service. If ND letdown were in service, closing the ND cross-tie ensures letdown flow does not continue to heat-up the KC water.

   If ND temp is above approx 160F in ND Hx, voiding in Hx tubes or ND high pt will occur if at mid-loop. ND high pt is 762' (line to NS-38). Top of Hx tubes is 761'5. Mid loop elev is 740'2.25 (740'2.5 on unit 2). The difference between mid-loop and high pt is 21.8 ft. At 180F, this is equal to a vacuum of 9.18psi (21.8/(0.01651*144)) or 14.7 – 9.18 = 5.5psia. Sat temp is approx 176F. To avoid reaching sat temp in Hx or at high pt, ND pumps will be stopped at 150F (17F margin to account for instr error and operator response time). If ND pump is stopped at 150F, a subsequent start of ND pump should not cause water hammer. Note also that stopping ND pumps will preclude excessive heatup and swell of KC water in Hx. If KC temp got too high (above sat temp), voiding of KC water in HX could also occur. Note also that design temp of KC piping downstream of Hx is 160F, so stopping ND pump will reduce risk of challenging temp limit of piping when KC restarted (although any challenge would be short lived). ND pump mech seal cooling will also be lost; continued operation of ND pump at high temperatures could cause problems with ND pump. The design temp of the seal is 190F and the ND pump instruction manual says the seal temperatures should be 160-180F during operation.

4) "KC pump trip criteria" is included so that if KC pumps cavitate, enclosure 2 is used to isolate the affected train from the non-essential headers. Isolating the non-essential headers protects them from draining through a large leak on affected train. Since the tripped KC pumps are no longer providing cooling to the non-essential headers, this will not further degrade cooling to these headers. Enclosure 2 also provides guidance to quickly swap trains if cooling to the reactor bldg header is lost. Loss of cooling to the reactor bldg header will lead to tripping NC pumps and tripping the reactor unless an intact KC train is aligned to cool this header.

5) "VCT high temperature" is included to address concerns with loss of cooling to the aux bldg non-essential header. Enclosure 6 is used to address these concerns. Step 44 also references Encl 6 if the aux bldg header has lost cooling. This enclosure ensures normal and ND letdown are isolated. It also addresses VCT heatup due to loss of

cooling to the seal water Hx. NV pump mini flow is cooled by the seal water Hx. If NV pump suction is aligned to the VCT, the PD pump will be run instead of the normal charging pumps. The PD pump will not heat up the VCT, since it does not recirc water to the VCT. If the PD pump is not available, the NV pumps will be aligned to the FWST as a suction source. The FWST is the assured suction source for the NV pumps. If the PD pump is used, and VCT temperature continues to rise above 125F, the seal return valves will be closed, to prevent continued heatup of the VCT by seal return flow. Closing the seal return isolation valves places these valves in their safety position. Per PIP M94-239 corrective action 3, engineering recommends this be done prior to reaching 150F. This limits heatup of NCP seal injection and affect on NC pump seal. 25F allows margin for operator action time. Note that VCT high temp alarm will be received at 116F, so operators will recognize that they are approaching limits.

REFERENCES:
OEDB 98-017559, Loss of inventory from KC
6/30/95 email from system engineering – Jeff Nolin
PIP M94-239, KC non-ess loads needed during accident; eval needed.
PIP M-94-1376, Evaluate means to quickly restore NC pump cooling

STEP 3:

PURPOSE:

Stop dilution.

DISCUSSION:

Since a problem with KC could lead to a loss of NC system flow, which is undesirable with a dilution in progress, dilution is stopped early in the AP since the effects of a dilution can continue for a period of time.

STEPS 4, 5 and 6:

PURPOSE:

A check is made to see if ND is in RHR mode. Implementation of Containment Evacuation and initiation of Containment Closure will follow if ND is in RHR with a loss of all running KC pumps.

DISCUSSION:

These steps will address what actions will need to be performed if all KC pumps are off with the ND system in RHR mode. The conservative approach here is to initiate the isolation of

ACTION/EXPECTED RESPONSE	RESPONSE NOT OBTAINED

1. **Isolate letdown as follows:**

   a. Close:

   __ • 1NV-458A (75 GPM L/D Orifice Outlet Cont Isol)

   __ • 1NV-457A (45 GPM L/D Orifice Outlet Cont Isol)

   __ • 1NV-35A (Variable L/D Orifice Outlet Cont Isol).

   b. Close:

   __ • 1NV-1A (NC L/D Isol To Regen Hx)

   __ • 1NV-2A (NC L/D Isol To Regen Hx).

   __ c. Check ND - IN SERVICE PRIOR TO EVENT.

   __ c. GO TO Step 2.

   __ d. Close 1NV-121 (ND Letdown Control).

__ 2. **Check NV pumps suction - ALIGNED TO VCT.**

__ **RETURN TO step in effect in body of this procedure.**

CAUTION **VCT high temperature will degrade NC pump seal cooling and NV pump operation.**

NOTE A loss of KC cooling to KC aux building non-essential header causes VCT temperature to rise, primarily due to NV pump recirc flow.

__ 3. **IF restoration of KC cooling to aux building non-essential header is expected within next 15 minutes, THEN exit this enclosure.**

__ 4. **Check excess letdown - ISOLATED.**

Perform the following:

__ a. Place 1NV-27B (Excess L/D Hx Otlt 3-Way Cntrl) to "NCDT" position.

__ b. GO TO Step 6.

ACTION/EXPECTED RESPONSE	RESPONSE NOT OBTAINED

__ 5. **IF AT ANY TIME excess letdown must be established, AND KC cooling still lost to KC aux building non-essential header, THEN excess letdown must be aligned to NCDT instead of VCT.**

NOTE
- PD pump will not heat up VCT since it does not recirc water to VCT.
- Running PD pump instead of swapping NV to FWST will prevent thermal transient on NC pumps, and allow continued operation of unit. 1A and 1B NV pumps will be stopped to prevent VCT overheating.

6. **Check:**

__ **GO TO Step 15.**

__ • PD pump - AVAILABLE TO RUN

__ • 1ETA - ENERGIZED

__ • 1RN-42A (AB Non Ess Supply Isol) - OPEN.

ACTION/EXPECTED RESPONSE	RESPONSE NOT OBTAINED

7. **Start PD pump as follows:**

   a. Open the following valves:

   __ • 1RN-63B (AB Non Ess Return Isol)

   __ • 1RN-64A (AB Non Ess Return Isol).

   __ b. Ensure Charging flow - LESS THAN 90 GPM.

   __ c. Place "PD PUMP SPEED CNTRL" in "MAN" and set for minimum speed.

   __ d. Open 1NV-1047A (PD Pump Recirculation).

   __ e. Start the PD pump.

   __ f. Ensure 1NV-1047A closes after 2 minutes.

   __ g. **WHEN** 1NV-1047A (PD Pump Recirculation) is closed, **THEN** raise "PD PUMP SPEED CNTRL" to establish desired charging flow.

__ **GO TO Step 15**

__ 8. **Close 1NV-238 (Charging Line Flow Control) while maintaining charging flow with PD pump.**

__ 9. **Stop 1A and 1B NV pump.**

__ 10. **Place 1NV-238 (Charging Line Flow Control) at 80% open.**

ACTION/EXPECTED RESPONSE	RESPONSE NOT OBTAINED

NOTE NC pump seal return flow may still cause VCT heatup.

__ 11. **Check VCT temperature - LESS THAN 125° F.**

Perform the following:

CAUTION **NC pumps number 1 seal D/P will go down by approximately 100 PSID when valves are closed in next step.**

a. Close one of the following:

__ • 1NV-94AC (NC Pumps Seal Ret Cont Inside Isol)

OR

__ • 1NV-95B (NC Pumps Seal Ret Cont Outside Isol).

__ b. WHEN KC restored to KC aux building non-essential header, THEN valves above may be reopened to align seal return to VCT.

__ c. GO TO Step 13.

__ 12. **IF AT ANY TIME VCT temperature goes above 125° F, THEN observe Note prior to Step 11 and RETURN TO Step 11.**

__ 13. **IF AT ANY TIME 1A or 1B NV pumps must be started, AND KC cooling still lost to KC aux building non-essential header, THEN GO TO Step 15.**

__ 14. **RETURN TO step in effect in body of this procedure.**

ACTION/EXPECTED RESPONSE	RESPONSE NOT OBTAINED
__ 15. **Check Reactor - TRIPPED.**	**Perform the following:** __ a. Reduce turbine load as required to maintain T-Ave at T-Ref in subsequent steps. __ b. <u>REFER TO</u> AP/1/A/5500/04 (Rapid Downpower) as required.
16. **Swap NV suction to FWST as follows:** a. Open: __ • 1NV-221A (NV Pumps Suct From FWST) __ • 1NV-222B (NV Pumps Suct From FWST). b. Close: __ • 1NV-141A (VCT Outlet Isol) __ • 1NV-142B (VCT Outlet Isol).	
17. **<u>WHEN</u> KC cooling is restored to KC aux building non-essential header, <u>THEN</u> NV suction may be realigned to VCT as follows:** a. Open: __ • 1NV-141A (VCT Outlet Isol) __ • 1NV-142B (VCT Outlet Isol). b. Close: __ • 1NV-221A (NV Pumps Suct From FWST) __ • 1NV-222B (NV Pumps Suct From FWST).	
__ 18. **<u>RETURN TO</u> step in effect in body of this procedure.**	

1 Pt. Unit 1 was at 100% RTP when the following events occur:

- A S/G PORV fails open
- Pressurizer level initially decreases 7% ~~as T-ave decreases~~
- The S/G PORV is isolated and T-ave is restored to program~~med.~~
- Pressurizer level increases back to program~~med level~~

Which one of the following would be the immediate effect of the above transient (~~in~~surge) on "inherent pressurizer pressure control"?

A. Degraded; because integral function of the master controller will be controlling at a lower than desired Pzr. pressure.

B. Degraded; because it will take some time for Pzr Htrs to restore saturated conditions in the Pzr water space.

C. Not affected; because a return to saturated conditions occurs as soon as Pzr. level is restored to normal.

D. Not affected; because the integral function would be cancelled when pressurizer pressure is returned to normal.

---

swell then level ↓. Charging restores level

Not really degraded just slower.

Pzr pressure would recover slowly because ....

Pzr pressure would recover quickly because ...

Bank Question: 1096 **Answer: B**

1 Pt. Unit 1 was at 100% RTP when the following events occur:

- A S/G PORV fails open
- Pressurizer level initially decreases 7% as T-ave decreases
- The S/G PORV is isolated and T-ave is restored to programmed.
- Pressurizer level increases back to programmed level

Which one of the following would be the immediate effect of the above transient (insurge) on "inherent pressurizer pressure control"?

A. Degraded; because integral function of the master controller will be controlling at a lower than desired Pzr. pressure.

B. Degraded; because it will take some time for Pzr Htrs to restore saturated conditions in the Pzr water space.

C. Not affected; because a return to saturated conditions occurs as soon as Pzr. level is restored to normal.

D. Not affected; because the integral function would be cancelled when pressurizer pressure is returned to normal.

Distracter Analysis:.

A. **Incorrect**: The integral function of the controller will be trying to control at a higher than desired pressure.
Plausible:

B. **Correct**:

C. **Incorrect**: Saturated conditions will take some time to recover due to an insurge into the Pzr.
Plausible:

D. **Incorrect** Integral function will take some time to be cancelled.
Plausible:

LEVEL: RO and SRO

KA: 000027/EK3.04 (2.8/3.3)

SOURCE: New

LEVEL OF KNOWLEDGE: Analysis

AUTHOR: CWS

LESSON: OP-MC-AP-10

OBJECTIVES: OP-MC-AP-10 obj.2

REFERENCES: OP-MC-AP-10 pg. 31
AP-10 pg. 30

APE: 027 Pressurizer Pressure Control System (PZR PCS) Malfunction

K/A NO.	KNOWLEDGE	IMPORTANCE RO	IMPORTANCE SRO
AK1.	**Knowledge of the operational implications of the following concepts as they apply to Pressurizer Pressure Control Malfunctions: (CFR 41.8 / 41.10 / 45.3)**		
AK1.01	Definition of saturation temperature	3.1	3.4
AK1.02	Expansion of liquids as temperature increases	2.8	3.1
AK1.03	Latent heat of vaporization/condensation	2.6	2.9
AK2.	**Knowledge of the interrelations between the Pressurizer Pressure Control Malfunctions and the following: (CFR 41.7 / 45.7)**		
AK2.01	Valves	2.1	2.2
AK2.02	Sensors and detectors	2.4	2.6
AK2.03	Controllers and positioners	2.6	2.8
AK2.04	Pumps	1.9	2.1
AK2.05	Motors	1.8	2.0
AK3.	**Knowledge of the reasons for the following responses as they apply to the Pressurizer Pressure Control Malfunctions: (CFR 41.5,41.10 / 45.6 / 45.13)**		
AK3.01	Isolation of PZR spray following loss of PZR heaters	3.5*	3.8
AK3.02	Verification of alternate transmitter and/or plant computer prior to shifting flow chart transmitters	2.9*	3.0
AK3.03	Actions contained in EOP for PZR PCS malfunction	3.7	4.1
AK3.04	Why, if PZR level is lost and then restored, that pressure recovers much more slowly	2.8	3.3
	ABILITY		
AA1.	**Ability to operate and / or monitor the following as they apply to the Pressurizer Pressure Control Malfunctions: (CFR 41.7 / 45.5 / 45.6)**		
AA1.01	PZR heaters, sprays, and PORVs	4.0	3.9
AA1.02	SCR-controlled heaters in manual mode	3.1*	3.0
AA1.03	Pressure control when on a steam bubble	3.6	3.5
AA1.04	Pressure recovery, using emergency-only heaters	3.9*	3.6*
AA1.05	Transfer of heaters to backup power supply	3.3*	3.2*

CLASSROOM TIME (Hours)

NLO	NLOR	LPRO	LPSO	LOR
		1.0	1.0	1.0

OBJECTIVES

	OBJECTIVE	NLO	NLOR	LPRO	LPSO	LOR
1	Concerning AP/1/A/5500/10 (NC System Leakage Within the Capacity of Both NV Pumps): • State the purpose of the AP • Recognize the symptoms that would require implementation of the AP. AP1001			X	X	X
2	Given scenarios describing accident events and plant conditions, evaluate the basis for any caution, note, or step. AP1002			X	X	X

For the shutdown condition where affected S/G pressure is less than 350 PSIG, NC depressurization will also be secured at 350 PSIG. With NV suction aligned to the VCT, VCT pressure will return to normal. This affects NC pump #1 seal backpressure and seal D/P. At this point, a small amount of additional depressurization can be performed while maintaining required NC pump seal D/P requirements. For example, if VCT pressure dropped from 75# to 25#, seal DP could increase 50#, allowing 50# more NC depressurization. See step 31 description for more detail on maintaining conditions to operate NC pumps.

CASE I STEP 41:

PURPOSE:

To saturate the water in the pressurizer to minimize any RCS pressure transients due to initiating pressurizer spray or opening a pressurizer PORV.

DISCUSSION:

Earlier in this guideline the pressurizer heaters were turned off to allow for more efficient NC depressurization using pressurizer spray. Subsequent recovery actions could fill the pressurizer with highly subcooled water. Spraying into the steam space or opening a PORV under these conditions could rapidly decrease NC pressure and subcooling. Consequently, to minimize any NC pressure transient, the pressurizer water should be saturated. However, since excessive operation of pressurizer heaters will tend to increase NC pressure and, therefore, reinitiate primary-to-secondary leakage, they should be used only as necessary to maintain NC pressure equal to the affected steam generator pressure.

CASE I STEP 42 NOTE:

PURPOSE:

To inform the operator that boration and cooldown to cold shutdown should be performed as quickly as possible.

DISCUSSION:

Ambient heat losses or small steam leaks may cause the affected steam generator pressure to slowly decrease. Since the operator was previously instructed to maintain NC pressure stable, depressurization of the affected steam generator would result in reinitiation of primary-to-secondary leakage. Since reinitiation of primary-to-secondary leakage is not desired and NC depressurization to stop leakage could challenge conditions for NCP operation, the boration and cooldown to cold shutdown should be performed in an expeditious manner.
Steam leaks past SM drain valve (inside MSIV) and MSIV and bypass valve can complicate SGTR response by slowly depressurizing the ruptured SG, reinitiating leak flow. This was seen

ACTION/EXPECTED RESPONSE	RESPONSE NOT OBTAINED
__ 40. **Check affected S/G pressure - GREATER THAN 350 PSIG.**	**Slowly depressurize NC System until any of the following is met:** __ • NC pump seal D/P approaches 200 PSID OR __ • NC pressure is at affected S/G pressure OR __ • NC subcooling based on core exit T/Cs is less than or equal to 20°F.
__ 41. **Operate Pzr heaters as necessary to saturate Pzr water.**	

NOTE Since affected S/G may continue to depressurize, boration and subsequent post-SG tube leak cooldown enclosure should be performed without delay.

42. **Check shutdown margin as follows:**

__ a. Request chemistry to obtain NC boron sample.	
__ b. Check shutdown margin based on boron sample - ADEQUATE.	__ b. Borate to restore shutdown margin.

__ 43. **IF S/G tube leak has been stopped, THEN contact station management to evaluate securing Outside Air Pressure Filter train PER OP/0/A/6450/011 (Control Area Ventilation/Chilled Water System), Enclosure 4.4 (Control Room Atmosphere Pressurization During Abnormal Conditions).**

1 Pt. Which one of the following strategies is appropriate in response to an ATWS?

A. Trip the turbine to increase reactor coolant system temperature to add negative reactivity.

B. Trip the turbine to decrease reactor coolant system temperature to add negative reactivity.

C. Manually Safety Inject to send an alternative signal to trip the reactor.

D. Manually Safety Inject to immediately borate adding negative reactivity.

---

which of the following actions AND results describing the response to an ATWS with NO failure of safety equipment.

Bank Question: 1097 **Answer: A**

---

1 Pt. Which one of the following strategies describes the correct mitigations is appropriate in response to an ATWS? strategy of the EOPs

A. Trip the turbine to increase reactor coolant system temperature and to add negative reactivity.

B. Trip the turbine to decrease reactor coolant system temperature to add negative reactivity. which preserves S/G inventory for core cooling. to send an alternative signal to trip the reactor

C. Manually Safety Inject to send an alternative signal to trip the reactor.

D. Manually Safety Inject to immediately borate adding negative reactivity.

Distracter Analysis:.

A. Correct:

B. Incorrect:
Plausible: If the student thinks that cooling down will add negative reactivity rather than positive.

C. Incorrect:
Plausible: Manual actuations are sometimes used as alternate signals for protection functions. Incorrect because a SI feedwater isolations is not desired.

D. Incorrect
Plausible: Manual SI can immediately add boron, but SI not desired due to giving a feedwater isolation.

LEVEL: RO & SRO

KA: 000029 EK1.05 2.8/3.2

SOURCE: NEW

LEVEL OF KNOWLEDGE: Knowledge

AUTHOR: CWS

LESSON: OP-MC-EP-FRS

OBJECTIVES: OP-MC-EP-FRS Obj. 4

REFERENCES: OP-MC-EP-FRS pages 25, and 29
EP/1A/5000/FR-S.1 page 2

EPE : 029 Anticipated Transient Without Scram (ATWS)

K/A NO.	KNOWLEDGE	IMPORTANCE RO	IMPORTANCE SRO
EK1	**Knowledge of the operational implications of the following concepts as they apply to the ATWS:** (CFR 41.8 / 41.10 / 45.3)		
EK1.01	Reactor nucleonics and thermo-hydraulics behavior	2.8	3.1
EK1.02	Definition of reactivity	2.6	2.8
EK1.03	Effects of boron on reactivity	3.6	3.8
EK1.04	Interpretation of terms: milliamps, logs, mils, percent, and reactivity units	2.2	2.5*
EK1.05	definition of negative temperature coefficient as applied to large PWR coolant systems	2.8	3.2
EK2	**Knowledge of the interrelations between the and the following an ATWS:** (CFR 41.7 / 45.7)		
EK2.01	Valves	1.9	2.1
EK2.02	Sensors and detectors	2.2	2.5
EK2.03	Controllers and positions	2.1	2.3
EK2.04	Pumps	2.1	2.1
EK2.05	Motors	1.9	1.9
EK2.06	Breakers, relays, and disconnects	2.9*	3.1*
EK3	**Knowledge of the reasons for the following responses as the apply to the ATWS:** (CFR 41.5 / 41.10 / 45.6 / 45.13)		
EK3.01	Verifying a reactor trip; methods	4.2	4.5
EK3.02	Starting a specific charging pump	3.1	3.1
EK3.03	Opening BIT inlet and outlet valves	3.7*	3.6*
EK3.04	Closing the normal charging header isolation valves	3.1*	3.1*
EK3.05	Closing the centrifugal charging pump recirculation valve	3.4*	3.5*
EK3.06	Verifying a main turbine trip; methods	4.2	4.3
EK3.07	Using local turbine trip lever	3.1*	3.4*
EK3.08	Closing the main steam isolation valve	3.6*	3.8
EK3.09	Opening centrifugal charging pump suction valves from RWST	3.7*	4.0*
EK3.10	Manual rod insertion	4.1	4.1
EK3.11	Initiating emergency boration	4.2	4.3
EK3.12	Actions contained in EOP for ATWS	4.4	4.7
	ABILITY		
EA1	**Ability to operate and monitor the following as they apply to a ATWS:** (CFR 41.7 / 45.5 / 45.6)		
EA1.01	Charging pumps	3.4*	3.1
EA1.02	Charging pump suction valves from RWST operating switch	3.6*	3.3
EA1.03	Charging pump suction valves from VCT operating switch	3.5*	3.2
EA1.04	BIT inlet valve switches	3.9*	3.8*
EA1.05	BIT outlet valve switches	3.7*	3.6*
EA1.06	Operating switches for normal charging header isolation valves	3.2*	3.1
EA1.07	Operating switch for charging pump recirculation valve	3.4*	3.1*
EA1.08	Reactor trip switch pushbutton	4.5	4.5

CLASSROOM TIME (Hours)

NLO	NLOR	LPRO	LPSO	LOR
		.75	.75	.75

OBJECTIVES

SEQ	OBJECTIVE	NLO	NLOR	LPRO	LPSO	LOR
1	Explain the purpose for each procedure in the FR-S series. EPFRS001			X	X	
2	Discuss the entry and exit guidance for each procedure in the FR-S series. EPFRS002			X	X	
3	Discuss the mitigating strategy (major actions) of each procedure in the FR-S series. EPFRS003			X	X	X
4	Discuss the basis for any note, caution or step for each procedure in the FR-S series. EPFRS004			X	X	X
5	Given the Foldout page, discuss the actions included and the basis for these actions. EPFRS005			X	X	X
6	Describe the immediate actions and include the RNO when appropriate. EPFRS006			X	X	X
7	Given the appropriate procedure, evaluate a given scenario describing accident events and plant conditions to determine any required action and its basis. EPFRS007			X	X	X
8	Discuss the time critical task(s) associated with the FR-S series procedures including the time requirements and the basis for these requirements. EPFRS008			X	X	X

STEP 2 Check Turbine Trip: (IMMEDIATE ACTION)

PURPOSE: To ensure that the turbine is tripped.

BASIS: For an ATWS event where a loss of normal feedwater has occurred, analyses have shown that a turbine trip is necessary (within 30 seconds) to maintain S/G inventory. For other ATWS events, manual tripping of the turbine may yield a higher system pressure than would otherwise occur. However, this action has been determined to be necessary due to the analytical results discussed earlier. Since there are many initiating ATWS events and some that require immediate mitigating actions, diagnosis of the initiating event would not be feasible and separate guidance for different ATWS events would complicate training and could delay timely performance of necessary operator actions.

If the turbine will not trip, a turbine runback (manual lowering of load) at maximum rate will also reduce steam flow in a delayed manner. If the turbine stop valves cannot be closed by either trip or runback, the MSIVs and MSIV bypass valves should be closed.

STEP 3 Monitor foldout page.

PURPOSE: Remind the operators to monitor the Foldout Page.

BASIS: The Foldout Page contains three items:

1. Transfer to Cold Leg Recirculation if FWST low level is reached. This operator action is required no matter what EP is in effect to ensure the transfer is accomplished without delay.
2. CA Suction Source Monitoring.
3. Criteria for isolating and unisolating the NV Pump Recirculation Isolation Valves (NV-150 and NV-151).

STEP 7 IF AT ANY TIME while in this procedure an S/I signal exists or occurs, THEN: Have another licensed operator check S/I equipment PER Enclosure 3 and continue in the procedure (CONTINUOUS ACTION)

PURPOSE: To alert the operator that proper actuation of all S/I actuated equipment must be verified.

BASIS: It is possible to make a transition to this procedure without having performed the verification of automatic S/I actions in E-0. This step specifically instructs the operator to have another Licensed Operator perform the necessary verification in accordance with Enclosure 3.

STEP 8 Check if Reactor and Turbine trips have occurred:

PURPOSE: To determine if earlier control room actions were successful in producing a reactor and turbine trip and, if not, to initiate local actions.

BASIS: A reactor trip is the fastest mechanism for adding negative reactivity to the core. Turbine trip removes a large source of positive reactivity addition (heat removal by steaming), and will conserve S/G inventory for the limiting ATWS event. If any of these actions have not been successfully achieved when attempted from the control room, an operator should be dispatched to perform the actions locally. Local actions were delayed until now because they will be more time consuming to initiate and complete, but may still be effective.

STEPS 9&10 Check reactor subcritical:

PURPOSE: Allows a quick kickout of this EP once the mitigating action to shutdown reactor is completed. (Power is less than 5%).

BASIS: At this point, other EPs may have higher priority and should be implemented without delay. Boration will be continued until shutdown margin is confirmed. Step 10 provides the transition if criteria of Step 9 are met.

STEP 11 Control S/G levels:

PURPOSE: To ensure that sufficient CA flow is present to remove heat generated from power operation during an ATWS event or a return to criticality, and to alert the operator the to monitor CA storage tank level.

BASIS: ATWS analyses have shown that CA flow of 700 gpm is acceptable to adequately remove the heat generated from power operation prior to reactor shutdown. If CA flow is not greater than 700 gpm when needed (when S/G levels are below 11%), it is important to increase CA flow in order to maintain a secondary heat sink. For the loss of normal feedwater ATWS, the S/G tubes are uncovered in about two minutes.

For other transients, such as a return to criticality, this feed flow would be excessive. Narrow range S/G level can be maintained with lower CA flow rates. As long as level can be maintained then the higher rate is not necessary.

ACTION/EXPECTED RESPONSE	RESPONSE NOT OBTAINED

C. **Operator Actions**

1. **Check Reactor Trip:**

   __ • All rod bottom lights - LIT

   __ • Reactor trip and bypass breakers - OPEN

   __ • I/R amps - GOING DOWN.

   Perform the following:

   __ a. Trip the reactor.

   __ b. IF reactor will not trip, THEN manually insert rods.

2. **Check Turbine Trip:**

   __ • All throttle valves - CLOSED.

   Perform the following:

   __ a. Trip turbine.

   b. IF turbine will not trip, THEN:

   __ 1) Place turbine in manual.

   __ 2) Close governor valves in fast action.

   3) IF governor valves will not close, THEN close:

   __ • All MSIVs

   __ • All MSIV bypass valves.

__ 3. **Monitor foldout page.**

4. **Check proper CA pump status:**

   __ a. MD CA pumps - ON.

   __ a. Start pumps.

   __ b. Check N/R Level in at least 3 S/Gs - GREATER THAN 17%.

   __ b. Ensure TD CA Pump is running.

1 Pt. Given the following conditions on Unit 1:

- Steam Generator "1A" tube rupture
- Crew has entered EP/1/A/5000/E-3 Steam Generator Tube Rupture
- "1A" MSIV fails to close
- Crew is now ready to initiate a NC system cooldown

Which one of the following describes the operator actions to accomplish the cooldown?

(INITIATE A COOLDOWN while maintaining NCT COLDS less than)

A. **Use the steam pressure controller to ~~obtain~~ a 100 °F/hour cooldown rate.**

B. **Use the steam pressure controller to obtain a maximum cooldown rate while attempting to avoid a Main Steam Isolation.**

C. **Use intact S/G(s) SM PORV controllers to obtain a 100 °F/hour cooldown rate.** ← SAME AS 'A'

D. **Use intact S/G(s) SM PORV controllers to obtain a maximum cooldown rate while attempting to avoid a Main Steam isolation.**

Bank Question: 1098 ***Answer: D***

1 Pt. Given the following conditions on Unit 1:

- Steam Generator "1A" tube rupture
- Crew has entered EP/1/A/5000/E-3 Steam Generator Tube Rupture
- "1A" MSIV fails to close
- Crew is now ready to initiate a NC system cooldown

Which one of the following describes the operator actions to accomplish the cooldown?

A. Use the steam pressure controller to obtain a 100 °F/hour cooldown rate.

B. Use the steam pressure controller to obtain a maximum cooldown rate while attempting to avoid a Main Steam Isolation.

C. Use intact S/G(s) SM PORV controllers to obtain a 100 °F/hour cooldown rate.

D. Use intact S/G(s) SM PORV controllers to obtain a maximum cooldown rate while attempting to avoid a Main Steam isolation.

Distracter Analysis:. The cooldown must be accomplished via intact S/Gs that are isolated from the ruptured S/G. For steam generator tube rupture scenarios, the strategy is to cooldown at maximum rate instead of the usual 100 degree/hour limit.

A. **Incorrect**:
Plausible: If the student fails to realize the effect of 1A MSIV to close and as a result invokes the alternative strategy of closing intact MSIV's using intact PORVs to cooldown.

B. **Incorrect**:
Plausible: If the student fails to realize the effect of 1A MSIV to close and as a result invokes the alternative strategy of closing intact MSIV's using intact PORVs to cooldown

C. **Incorrect**:
Plausible: This is the cooldown rate limit used for most EP/AP cooldowns. It is the Tech Spec limit.

D. **Correct**

LEVEL: RO and SRO

KA: 000038 EA1.35 3.5/3.6

SOURCE: NEW

LEVEL OF KNOWLEDGE: Comprehensive

AUTHOR: CWS

LESSON: OP-MC-EP-E3

OBJECTIVES: OP-MC-EP-E3 Obj. 4

REFERENCES: OP-MC-EP-E3 page 67
EP/E-3 pages 6, 7. 14, and 17

EPE:	**038 Steam Generator Tube Rupture (SGTR)**		
EA1.14	AFW pump control and flow indicators	4.1	3.9
EA1.15	AFW source level and capacity (chart)	3.9	3.9
EA1.16	S/G atmospheric relief valve and secondary PORV controllers and indicators	4.4	4.3
EA1.17	S/G sample isolation valve indicators	3.2*	3.2
EA1.18	S/G blowdown valve indicators	4.0	3.9
EA1.19	MFW System status indicator	3.4	3.4
EA1.20	AFW flow control valve reset switches and indicators	3.8*	3.6*
EA1.21	Charging pump ammeter and running indicator	3.4*	3.1*
EA1.22	RHR operating pump ammeter and indicators	2.7*	2.6
EA1.23	Boric acid pumps	2.6*	2.5*
EA1.24	Safety injection pump ammeter and indicators	3.6*	3.4
EA1.25	CCW pump ammeter and indicators	2.6*	2.4
EA1.26	High-head safety injection mini-flow valves and position indicators	3.6	3.4
EA1.27	Steam dump valve status lights and indicators	3.9	3.9
EA1.28	Interlock between MSIV and bypass valve	3.6*	3.5
EA1.29	CVCS tank indicators and water charging sources	3.5*	3.3
EA1.30	Safety injection and containment isolation systems	4.0	3.8
EA1.31	Reactor trip breaker and safety injection interlock	4.1	4.0
EA1.32	Isolation of a ruptured S/G	4.6	4.7
EA1.33	Use of S/G for natural circulation cooldown	4.4	4.3
EA1.34	Obtaining shutdown with natural circulation	4.2	4.3
EA1.35	Steam dump condenser	3.5	3.6
EA1.36	Cooldown of RCS to specified temperature	4.3	4.5
EA1.37	Controlling of thermal shock during PZR spray operation	3.5*	3.4
EA1.38	PZR heaters	3.3*	3.3
EA1.39	Drawing S/G into the RCS, using the "feed and bleed" method	3.6*	3.7
EA1.40	Adding boron, to raise its ppm to the required shutdown concentration	4.0	4.0
EA1.41	Venting of the S/G to the atmosphere	3.4*	3.4*
EA1.42	Shutting of high-head safety injection mini-flow valves	3.3*	3.3*
EA1.43	Manual isolation of steam dump valves	3.6*	3.5*
EA1.44	Level operating limits for S/Gs	3.4*	3.4
EA1.45	Safely parameter display system	3.9*	4.0*
EA2	**Ability to determine or interpret the following as they apply to a SGTR: (CFR 43.5 / 45.13)**		
EA2.01	When to isolate one or more S/Gs	4.1	4.7
EA2.02	Existence of an S/G tube rupture and its potential consequences	4.5	4.8
EA2.03	Which S/G is ruptured	4.4	4.6
EA2.04	Radiation levels (MREM/hr)	3.9	4.2*
EA2.05	Causes and consequences of shrink and swell in S/Gs	2.8*	2.9
EA2.06	Shutdown margins and required boron concentrations	3.8	4.4
EA2.07	Plant conditions, from survey of control room indications	4.4	4.8
EA2.08	Viable alternatives for placing plant in safe condition when condenser is not available	3.8	4.4
EA2.09	Existence of natural circulation, using plant parameters.	4.2	4.2
EA2.10	Flowpath for charging and letdown flows	3.1	3.3
EA2.11	Local radiation reading on main steam lines	3.7*	3.9*
EA2.12	Status of MSIV activating system	3.9*	4.2
EA2.13	Magnitude of rupture	3.1*	3.7

ACTION/EXPECTED RESPONSE	RESPONSE NOT OBTAINED

4. (Continued)

f. Close the following on ruptured S/G(s):

__ • MSIV

__ • MSIV bypass valve.

f. Perform the following:

1) Close the following on remaining S/Gs:

__ • MSIV
__ • MSIV bypass valve.

__ 2) IF at least one intact S/G can not be isolated from ruptured S/G(s), THEN GO TO EP/1/A/5000/ECA-3.1 (SGTR With Loss Of Reactor Coolant - Subcooled Recovery Desired).

3) Isolate SM header:

__ • Select "OFF RESET" on steam dump interlock bypass switches.

• Close or dispatch operator to close the following:

__ • 1SM-14 (Main Steam To CSAE) (Unit 1 turbine bldg, 760+20, 1H-31, west side of column)

__ • 1SM-15 (SM To 2nd Stage MSR) (Unit 1 turbine bldg, 760+12, 1H-29, between 1H-29 and 1H-30)

__ • 1AS-12 (Main Steam To Aux Steam) (Unit 1 turbine bldg, 739+9, 1E-33, over SM equalization header south of lube oil room)

__ • 1TL-3 (SM To Steam Seal Isol) (Unit 1 turbine bldg, 760+7, 1D-33, northeast of DEH skid).

(RNO continued on next page)

ACTION/EXPECTED RESPONSE	RESPONSE NOT OBTAINED
4. (Continued)	
	• Dispatch operator to close: __ • 1SP-1 (SM To CF Pump 1A Isol) (Unit 1 turbine bldg, 760+12, 1H-26, west of CF pump 1A, between 1H-26 and 1J-26) __ • 1SP-2 (SM To CF Pump 1B Isol) (Unit 1 turbine bldg, 760+12, 1H-26, west of CF pump 1A, between 1H-26 and 1J-26). __ • Dispatch operator to isolate steam drains PER Enclosure 3 (Local Isolation of Steam Drain Bypass Valves). __ 4) WHEN cooldown is initiated in subsequent steps, THEN use intact S/G(s) SM PORV for steam dump.
5. **Control ruptured S/G(s) level as follows:**	
__ a. Check ruptured S/G(s) N/R level - GREATER THAN 11% (32% ACC).	a. Perform the following: __ 1) IF any ruptured S/G is also faulted, THEN do not establish feed flow to the ruptured S/G unless needed for NC System cooldown. 2) IF any ruptured S/G is non-faulted OR is required for cooldown, THEN: __ a) Establish and maintain feed flow to affected S/G(s). __ b) WHEN affected S/G(s) N/R level greater than 11% (32% ACC), THEN complete Step 5.b. __ 3) GO TO Step 6.

NOTE
- NC pump trip criteria based on subcooling does not apply after starting a controlled cooldown.
- After the Low Pressure Steamline Isolation signal is blocked, maintaining steam pressure negative rate less than 2 PSIG per second will prevent a Main Steam Isolation.

10. **Initiate NC System cooldown as follows:**

__ a. Determine required core exit temperature based on lowest ruptured S/G pressure:

LOWEST RUPTURED S/G PRESSURE (PSIG)	CORE EXIT T/Cs (°F)
GREATER THAN 1099	520 (519 ACC)
1000 - 1099	508 (507 ACC)
900 - 999	494 (493 ACC)
800 - 899	480 (479 ACC)
700 - 799	463 (462 ACC)
600 - 699	444 (444 ACC)
500 - 599	423 (422 ACC)
400 - 499	396 (395 ACC)
300 - 399	362 (361 ACC)
280 - 299	353 (353 ACC)

b. Check condenser available:

__ b. **GO TO** RNO for Step 10.f.

__ • "C-9 COND AVAILABLE FOR STEAM DUMP" status light (1SI-18) - LIT

__ • MSIV on intact S/G(s) - OPEN.

ACTION/EXPECTED RESPONSE	RESPONSE NOT OBTAINED

10. (Continued)

9) **IF** 1B **OR** 1C S/G is ruptured, **THEN** do not continue until steam is isolated to TD CA pump from ruptured S/G per one of the following:

__ • Local isolation of SA line (per Step 4.c)

OR

__ • Tripping TD CA pump stop valve (per Step 4.c).

10) Dump steam using all intact S/G(s) SM PORVs at maximum rate as follows:

__ a) Close SM PORV manual loader on ruptured S/G(s).

__ b) Place intact S/G SM PORV manual loaders at 50%.

__ c) Select "MANUAL" on "SM PORV MODE SELECT".

__ d) Adjust manual loaders on intact S/G SM PORVs as required to control intact S/G depressurization rate at approximately 2 PSIG per second.

(RNO continued on next page)

CLASSROOM TIME (Hours)

NLO	NLOR	LPRO	LPSO	LOR
		4.0	4.0	3.0

OBJECTIVES

SEQ	OBJECTIVE	NLO	NLOR	LPRO	LPSO	LOR
1	Explain the purpose for each procedure in the E-3 series. EPE3001			X	X	
2	Discuss the entry and exit guidance for each procedure in the E-3 series. EPE3002			X	X	
3	Discuss the mitigating strategy (major actions) of each procedure in the E-3 series. EPE3003			X	X	X
4	Discuss the basis for any note, caution or step for each procedure in the E-3 series. EPE3004			X	X	X
5	Given the Foldout page, discuss the actions included and the basis for these actions. EPE3005			X	X	X
6	Given the appropriate procedure, evaluate a given scenario describing accident events and plant conditions to determine any required action and its basis. EPE3006			X	X	X
7	Discuss the time critical task(s) associated with the E-3 series procedures including the time requirements and the basis for these requirements. EPE3007			X	X	X

STEP 10 (CONTINUED)

The preferred cooldown method is to dump steam to the condenser at max rate while attempting to avoid main steam isolation. If the condenser is not available or steam dump to the condenser is not possible, the SG PORVs should be used per the RNO for step 10 f. Any delay in initiating cooldown can lead to ruptured S/G overfill. If main steam isolation occurs, while using S/G PORVs, it will have little impact on dumping of steam. The PORVs can be quickly reset and cooldown reinitiated. Although depressurizing at rate specified (2 psig/sec) is very close to rate that would give isolation, it is justified to push rate as hard as possible (when using S/G PORVs). Ensuring steamline Isolation is blocked using NC PORV will prevent any delay in dumping steam with S/G PORVs.

If any intact SG PORV cannot be opened from the Control Room, local operation at the valve is directed. The PORVs should be opened fully using the valve handwheel not the manual loader in the doghouse.

Once the cooldown is started, the crew is to continue in the procedure until directed to not continue in the procedure in step 15. This progression through the procedure reduced the time required to stop the leakage into the ruptured S/G.

1 Pt. Given the following conditions on Unit 1:

- Reactor trip, Safety Injection, and Main Steam Isolation have occurred
- Reactor Coolant System pressure is 1820 psig and decreasing rapidly
- Reactor Coolant System temperature is 525 degrees and decreasing rapidly
- Containment humidity: increasing
- Secondary radiation: normal
- Containment Pressure is 2.1 psig and increasing
- Containment radiation: normal

Which one of the following events is consistent with the above conditions?

A. A small break LOCA.

B. A large break LOCA.

C. A faulted steam generator.

D. A steam generator tube rupture.

Bank Question: 1099 ***Answer: C***

1 Pt. Given the following conditions on Unit 1:

- Reactor trip, Safety Injection, and Main Steam Isolation have occurred
- RCS pressure is 1820 psig and decreasing rapidly
- RCS temperature is 525 degrees and decreasing rapidly
- Containment humidity: increasing
- Secondary radiation: normal
- Containment Pressure is 2.1 psig and increasing
- Containment radiation: normal

Which one of the following events is consistent with the above conditions?

A. A small break LOCA.

B. A large break LOCA.

C. A faulted steam generator.

D. A steam generator tube rupture.

Distracter Analysis:. Of the four events listed that can result in a Safety Injection the indications of a high energy break in containment with normal radiation is indicative of a faulted S/G.

A. **Incorrect**:
Plausible:
B. **Incorrect**:
Plausible:
C. **Correct**:
D. **Incorrect**
Plausible:

LEVEL: RO & SRO

KA: 000040K2.02 2.6*/2.6

SOURCE: BANK Cook 1 NRC Exam 2001

LEVEL OF KNOWLEDGE: Knowledge

AUTHOR: CWS

LESSON: OP-MC-EP-E0

OBJECTIVES: OP-MC-EP-E0 Obj. 6

REFERENCES: OP-MC-EP-E0 pages 45 and 47
EP/E0 pages 16 and 17

APE: 040 Steam Line Rupture

K/A NO.	KNOWLEDGE	IMPORTANCE RO	IMPORTANCE SRO
AK1.	**Knowledge of the operational implications of the following concepts as they apply to Steam Line Rupture: (CFR 41.8 / 41.10 / 45.3)**		
AK1.01	Consequences of PTS	4.1	4.4
AK1.02	Leak rate versus pressure change	3.2	3.6
AK1.03	RCS shrink and consequent depressurization	3.8	4.2
AK1.04	Nil ductility temperature	3.2	3.6
AK1.05	Reactivity effects of cooldown	4.1	4.4
AK1.06	High-energy steam line break considerations	3.7	3.8
AK1.07	Effects of feedwater introduction on dry S/G	3.4	4.2
AK2.	**Knowledge of the interrelations between the Steam Line Rupture and the following: (CFR 41.7 / 45.7)**		
AK2.01	Valves	2.6*	2.5
AK2.02	Sensors and detectors	2.6*	2.6
AK2.03	Controllers and positioners	2.4*	2.4
AK2.04	Pumps	2.0	2.1
AK2.05	Breakers, relays, and disconnects	1.9	2.1
AK2.06	Motors	2.0	2.1
AK3.	**Knowledge of the reasons for the following responses as they apply to the Steam Line Rupture: (CFR 41.5,41.10 / 45.6 / 45.13)**		
AK3.01	Operation of steam line isolation valves	4.2	4.5
AK3.02	ESFAS initiation	4.4	4.4
AK3.03	Steam line non-return valves	3.2*	3.5*
AK3.04	Actions contained in EOPs for steam line rupture	4.5	4.7
AK3.05	Airlock leak tests	2.1*	2.3
AK3.06	Containment temperature and pressure considerations	3.4	3.9

CLASSROOM TIME (Hours)

NLO	NLOR	LPRO	LPSO	LOR
N/A	N/A	2.0	2.0	1.0

OBJECTIVES

SEQ	OBJECTIVE	NLO	NLOR	LPRO	LPSO	LOR
1	Describe the accidents that are diagnosed in E-0 and the diagnostic sequence. EPE0001			X	X	X
2	Explain the purpose for each procedure in the E-0 series. EPE0002			X	X	
3	Discuss the entry and exit guidance for each procedure in the E-0 series. EPE0003			X	X	
4	Discuss the symptoms of a reactor trip and/or safety injection. EPE0004			X	X	
5	Discuss the mitigating strategy (major actions) of each procedure in the E-0 series. EPE0005			X	X	X
6	Discuss the basis for any note, caution or step for each procedure in the E-0 series. EPE0006			X	X	X
7	Describe the immediate actions and include the RNO when appropriate. EPE0007			X	X	X
8	Describe the actions included on the E-0 Foldout page and the basis for these actions. EPE0008			X	X	X
9	Given the Foldout page, other than E-0, discuss the actions included and the basis for these actions. EPE0009			X	X	X

STEP 20 Check if main steamlines intact:

PURPOSE: To identify any faulted S/Gs (failure in secondary pressure boundary.)

BASIS: An uncontrolled S/G pressure decrease or a completely depressurized (i.e., near containment or atmospheric pressure) S/G indicates failure of the secondary pressure boundary and a loss of primary heat sink.

Isolation is to be performed using E-2, Faulted Steam Generator Isolation.

STEP 21 Check if S/G tubes intact:

PURPOSE: To identify any ruptured S/Gs (failure in primary to secondary pressure boundary.)

BASIS: Abnormal condenser air ejector radiation or S/G level increasing in an uncontrolled manner indicates primary to secondary leakage. Also checking steamline EMF values may expedite SGTR diagnosis.

In the MNS SGTR event, a steamline EMF alarm provided the first indication of the SGTR.

The operators may have already started controlling CA flow and realize that they do not have control of S/G level.

Optimal recovery in dealing with a steam generator tube rupture is provided in E-3, Steam Generator Tube Rupture.

STEP 22 Check if NC System intact:

PURPOSE: To identify any failure in the NC pressure boundary into the containment.

BASIS: Abnormal containment radiation, pressure, or recirculation sump level is indicative of a high-energy line break in containment. Since the S/Gs have been determined to be non-faulted in an earlier step, then the break must be in the NC system. For smaller size breaks, recirculation sump level may not increase for a period of time; however, containment pressure and radiation would be apparent.

Procedure E-1, Loss of Reactor or Secondary Coolant, is used for breaks in the NC system.

STEP 23 Check S/I termination criteria:

PURPOSE: To determine if conditions have been established which indicate that S/I flow is no longer required.

BASIS: Following S/I actuation, NC conditions may be restored to within acceptable limits for S/I flow reduction or termination to be allowed, particularly if the S/I is spurious.

ACTION/EXPECTED RESPONSE	RESPONSE NOT OBTAINED

20. **Check if main steamlines intact:**

__ • All S/G pressures - STABLE OR GOING UP

__ • All S/Gs - PRESSURIZED.

IF any S/G is faulted, THEN:

__ a. Implement EP/1/A/5000/F-0 (Critical Safety Function Status Trees).

__ b. GO TO EP/1/A/5000/E-2 (Faulted Steam Generator Isolation).

21. **Check if S/G tubes intact:**

• The following secondary EMFs - NORMAL:

__ • 1EMF-33 (Condenser Air Ejector Exhaust)

__ • 1EMF-34(L) (S/G Sample (Lo Range))

__ • 1EMF-24 (S/G A)

__ • 1EMF-25 (S/G B)

__ • 1EMF-26 (S/G C)

__ • 1EMF-27 (S/G D).

__ • S/G levels - STABLE OR GOING UP IN A CONTROLLED MANNER.

IF S/G levels going up in an uncontrolled manner OR any EMF abnormal, THEN:

__ a. Implement EP/1/A/5000/F-0 (Critical Safety Function Status Trees).

__ b. GO TO EP/1/A/5000/E-3 (Steam Generator Tube Rupture).

ACTION/EXPECTED RESPONSE	RESPONSE NOT OBTAINED

22. **Check if NC System intact:**

- Check containment EMFs - NORMAL:

__ • 1EMF-38(L) (Containment Particulate (LR))

__ • 1EMF-39(L) (Containment Gas (Lo Range))

__ • 1EMF-40 (Containment Iodine)

__ • 1EMF-9 (Reactor Bldg Incore Inst Rm)

__ • 1EMF-16 (Containment Refueling Brdg).

__ • IF offsite power available, THEN check "ICE COND LOWER INLET DOORS OPEN" alarm (1AD-9, A-5) - DARK.

__ • Check containment pressure - LESS THAN 1 PSIG

__ • Check containment sump level - NORMAL.

Perform the following:

a. IF H_2 Igniters are off, THEN perform the following:

__ 1) Energize H_2 Igniters by depressing "ON" and "OVERRIDE".

__ 2) Dispatch operator to stop all Unit 1 NF AHUs (control panels located in 750 and 733 electrical penetration rooms).

__ b. Implement EP/1/A/5000/F-0 (Critical Safety Function Status Trees).

__ c. GO TO EP/1/A/5000/E-1 (Loss Of Reactor Or Secondary Coolant).

..000040.k2.02 | 5/21/2001

Cook 1 | Exam Level R | Mark Question | Print Recor | New Searc | Exit

Question

The following plant conditions exist:

- Reactor trip, Safety Injection, and Main Steam Line Isolation have occurred
- RCS pressure is 1820 psig and decreasing rapidly
- RCS temperature is 525F and decreasing rapidly
- Containment humidity: increasing
- Secondary radiation: normal
- Containment pressure is 2.1 psi and increasing
- Containment radiation: normal

These conditions are indicative of...

Answer: A faulted steam generator.

Distracter 1 A small break LOCA.

Distracter 2 A large break LOCA

Distracter 3 A steam generator tube rupture.

Distracter Analysis:

Answer:

Distracter 1:

Distracter 2:

Distracter 3:

1 Pt. Which one of the following are the reasons for controlling Auxiliary Feedwater following a loss of Main Feedwater?

A. **Stop the excessive cooldown**
Prevent overfill of S/Gs .

B. **Stop the excessive cooldown**
Conserve CA storage tank inventory

C. **Prevent overfill of S/Gs**
Conserve CA storage tank inventory

D. **Prevent overfill of S/Gs**
Prevent CA pump runout

~~**Bank Question: 1100**~~ **Answer: A**

1 Pt Which one of the following ~~are the reasons for controlling~~ throttling Auxiliary Feedwater following a loss of Main Feedwater?

A. **Stop the excessive cooldown**
Prevent overfill of S/Gs .

B. **Stop the excessive cooldown**
Conserve CA storage tank inventory

C. **Prevent overfill of S/Gs**
Conserve CA storage tank inventory } possibly correct

D. **Prevent overfill of S/Gs**
Prevent CA pump runout

Distracter Analysis:. All four of the above could be potential reasons for throttling system flow. CA storage tank inventory will be maintained via procedure guidance. CA pump runout is avoided by mechanical stops on discharge control valves.

A. **Correct**:
B. **Incorrect**:
Plausible:
C. **Incorrect**:
Plausible:
D. **Incorrect**
Plausible:

LEVEL: RO ~~& SRO~~

KA: 000054 AK3.03 3.8/4.1

SOURCE: NEW

LEVEL OF KNOWLEDGE: Memory

AUTHOR: CWS

LESSON: OP-MC-EP-E0

OBJECTIVES: OP-MC-EP-E0 Obj. 6

REFERENCES: OP-MC-EP-E0 pages 59 and 75
EP-E0 pages 26 and 34

APE: 054 Loss of Main Feedwater (MFW)

K/A NO.	KNOWLEDGE	IMPORTANCE RO	IMPORTANCE SRO
AK1.	**Knowledge of the operational implications of the following concepts as they apply to Loss of Main Feedwater (MFW): (CFR 41.8 / 41.10 / 45.3)**		
AK1.01	MFW line break depressurizes the S/G (similar to a steam line break)	4.1	4.3
AK1.02	Effects of feedwater introduction on dry S/G	3.6	4.2
AK2.	**Knowledge of the interrelations between the Loss of Main Feedwater (MFW) and the following: (CFR 41.7 / 45.7)**		
AK2.01	Valves	2.4*	2.3
AK2.02	Controller and positioners	2.2*	2.2
AK2.03	Pumps	2.1	2.2
AK2.04	Motors	1.9	2.0
AK2.05	Heat exchangers and condensers	1.9	2.1
AK2.06	Breakers, relays, and disconnects	1.8	1.9
AK2.07	Sensors and detectors	2.1	2.2
AK3.	**Knowledge of the reasons for the following responses as they apply to the Loss of Main Feedwater (MFW): (CFR 41.5,41.10 / 45.6 / 45.13)**		
AK3.01	Reactor and/or turbine trip, manual and automatic	4.1	4.4
AK3.02	Matching of feedwater and steam flows	3.4*	3.7*
AK3.03	Manual control of AFW flow control valves	3.8	4.1
AK3.04	Actions contained in EOPs for loss of MFW	4.4	4.6
AK3.05	HPI/PORV cycling upon total feedwater loss	4.6	4.7
	ABILITY		
AA1.	**Ability to operate and / or monitor the following as they apply to the Loss of Main Feedwater (MFW): (CFR 41.7 / 45.5 / 45.6)**		
AA1.01	AFW controls, including the use of alternate AFW sources	4.5	4.4
AA1.02	Manual startup of electric and steam-driven AFW pumps	4.4	4.4
AA1.03	AFW auxiliaries, including oil cooling water supply	3.5	3.7
AA1.04	HPI, under total feedwater loss conditions	4.4	4.5

CLASSROOM TIME (Hours)

NLO	NLOR	LPRO	LPSO	LOR
N/A	N/A	2.0	2.0	1.0

OBJECTIVES

SEQ	OBJECTIVE	NLO	NLOR	LPRO	LPSO	LOR
1	Describe the accidents that are diagnosed in E-0 and the diagnostic sequence. EPE0001			X	X	X
2	Explain the purpose for each procedure in the E-0 series. EPE0002			X	X	
3	Discuss the entry and exit guidance for each procedure in the E-0 series. EPE0003			X	X	
4	Discuss the symptoms of a reactor trip and/or safety injection. EPE0004			X	X	
5	Discuss the mitigating strategy (major actions) of each procedure in the E-0 series. EPE0005			X	X	X
6	Discuss the basis for any note, caution or step for each procedure in the E-0 series. EPE0006			X	X	X
7	Describe the immediate actions and include the RNO when appropriate. EPE0007			X	X	X
8	Describe the actions included on the E-0 Foldout page and the basis for these actions. EPE0008			X	X	X
9	Given the Foldout page, other than E-0, discuss the actions included and the basis for these actions. EPE0009			X	X	X

STEP 37 Control S/G levels:

PURPOSE: To ensure adequate feed flow or S/G inventory for secondary heat sink requirements.

To alert the operator that CA suction sources should be monitored, and an alternate supply may be necessary.

BASIS: The minimum feed flow requirement satisfies the feed flow requirement of the Heat Sink Status Tree until level in at least one S/G is restored into the narrow range. Narrow range level is reestablished in all S/Gs to maintain symmetric cooling of the NC. The control range ensures adequate inventory with level readings on span.

The transition to E-3, Steam Generator Tube Rupture, responds to an increasing level, which would be observed following a SGTR.

Enclosure 2 - Phase B HVAC Equipment

This enclosure provides the Balance of Plant operator with actions necessary to perform various Containment Ventilation alignments. These actions are performed outside the Control Room horseshoe area. This enclosure is entered from the RNO of a step that checks that containment pressure has remained less than 3 psig.

Check VE System Operation:

- **Check VE fans - ON.**
- **Ensure all VE damper mode select switches in "AUTO":**
- **Check annulus pressure being maintained - NEGATIVE.**

BASIS: These steps verify proper operation of the annulus ventilation system in maintaining a negative pressure in the annulus. This prevents an unfiltered release from containment to the environment.

Check VX System Operation:

WHEN ten minutes after Phase B signal have elapsed, THEN

- **Check Containment Air Return and H2 Skimmer Fan damper alignment.**
- **Check Containment Air Return and H2 Skimmer Fans on.**

BASIS: The Containment Air Return fans play an important role in maintaining containment pressure low during the long transient of a LOCA by circulating air through the ice condenser and mixing/circulating the air being cooled by the Containment Spray System.

The Hydrogen Skimmer System ensures that isolated pockets of hydrogen don't build up in dead-ended spaces in containment.

Enclosure 3 - Uncontrolled NC System Cooldown

This enclosure provides the operator at the controls with actions to stop an uncontrolled cooldown by;

1. Checking steam release paths isolated: Steam dump valves and PORVs closed and MSRs reset,
2. Throttling feed flow to minimize cooldown while maintaining total flow greater than 450 gpm until level in at least one S/G is greater than 11% (32% ACC),
3. IF cooldown continues, Close MSIVs and bypass valves.

ACTION/EXPECTED RESPONSE	RESPONSE NOT OBTAINED

__ 36. **Implement EP/1/A/5000/F-0 (Critical Safety Function Status Trees).**

37. **Control S/G levels:**

__ a. Check N/R level in any S/G - GREATER THAN 11%.

__ a. Maintain total feed flow greater than 450 GPM until at least one S/G N/R level greater than 11%.

__ b. Throttle feed flow to maintain all S/G N/R levels between 11% and 50%.

__ b. IF N/R level in any S/G continues to go up in an uncontrolled manner, THEN GO TO EP/1/A/5000/E-3 (Steam Generator Tube Rupture).

38. **Check secondary radiation:**

a. Check secondary EMFs - NORMAL:

__ a. GO TO EP/1/A/5000/E-3 (Steam Generator Tube Rupture).

__ • 1EMF-33 (Condenser Air Ejector Exhaust)

__ • 1EMF-34(L) (S/G Sample (Lo Range))

__ • 1EMF-24 (S/G A)

__ • 1EMF-25 (S/G B)

__ • 1EMF-26 (S/G C)

__ • 1EMF-27 (S/G D).

__ b. Dispatch operator and RP to check Unit 1 main steamlines in both exterior and interior doghouses for activity.

__ c. WHEN steamlines checked, THEN check activity - NORMAL.

__ c. GO TO EP/1/A/5000/E-3 (Steam Generator Tube Rupture).

ACTION/EXPECTED RESPONSE	RESPONSE NOT OBTAINED
__ 4. **Check any NC pump - ON.**	**Perform the following:** __ a. IF any NC T-Cold is still going down, THEN GO TO Step 6. __ b. IF cooldown stopped, THEN exit this enclosure.
__ 5. **Check NC T-Ave - GOING DOWN.**	__ **IF cooldown stopped, THEN exit this enclosure.**
6. **Control feed flow as follows:** a. IF S/G N/R level is less than 11% (32% ACC) in all S/Gs, THEN throttle feed flow to achieve the following: __ • Minimize cooldown __ • Maintain total feed flow greater than 450 GPM. b. WHEN N/R level is greater than 11% (32% ACC) in at least one S/G, THEN throttle feed flow further to: __ • Minimize cooldown __ • Maintain at least one S/G N/R level greater than 11% (32% ACC).	
__ 7. **Check MSIVs - ANY OPEN.**	**Perform the following:** __ a. Close MSIV bypass valves. __ b. Exit this enclosure.
__ 8. **Close 1SM-15 (SM To 2nd Stage MSR).**	

1 Pt. Given the following conditions:

- McGuire has experienced a station blackout
- Prior to the station blackout both Units were at 100% power with normal electrical alignments
- The "2A' Emergency Diesel Generator fails to start
- All other systems on both units responded as required

WOOTF DESCRIBES ~~the~~ ~~Which~~ vital DC battery should be monitored for decaying voltage and what action would be required to protect DC loads?

A. EVCA battery, open the battery breaker at 110 volts.

B. EVCA battery, open the battery breaker at 105 volts.

C. EVCC battery, open the battery breaker at 110 volts.

D. EVCC battery, open the battery breaker at 105 volts.

~~After~~ — having the X-connect & open choices?

Bank Question: 1101 ***Answer: D***

1 Pt. Given the following conditions:

- McGuire has experienced a station blackout
- Prior to the station blackout both Units were at 100% power with normal electrical alignments
- The "2A' Emergency Diesel Generator fails to start
- All other systems on both units responded as required

Which vital DC battery should be monitored for decaying voltage and what action would be required to protect DC loads?

A. EVCA battery, open the battery breaker at 110 volts.

B. EVCA battery, open the battery breaker at 105 volts.

C. EVCC battery, open the battery breaker at 110 volts.

D. EVCC battery, open the battery breaker at 105 volts.

Distracter Analysis: The normal electrical alignment for vital DC chargers is: 1A D/G for EVCA, 2A for EVCC, 1B for EVCB and 2B for EVCD. The battery breaker is opened at 105 volts because the DC components begin to fail at less than 105 volts and the battery could be damaged. Auxiliary control power battery breakers are opened at a higher voltage because their loads are not as important for operations.

A. Incorrect:
Plausible:

B. Incorrect:
Plausible:

C. Incorrect:
Plausible:

D. Correct

LEVEL: RO & SRO

KA: 000055 EA1.05 3.3/3.6

SOURCE: NEW

LEVEL OF KNOWLEDGE: Memory

AUTHOR: CWS

LESSON: Loss of Vital or Aux Control Power (AP-15) Background Document
OP-MC-EL-EPL

OBJECTIVES: OP-MC-EL-EPL Obj. 20
OP-MC-AP-15 Obj. 2

REFERENCES: OP-MC-EL-EPL pages 51 and 75
AP/15 page 55
AP/15 Background Document pages 4 and 46

EPE: 055 Loss of Offsite and Onsite Power (Station Blackout)

K/A NO.	KNOWLEDGE	IMPORTANCE RO	IMPORTANCE SRO
EK1	**Knowledge of the operational implications of the following concepts as they apply to the Station Blackout :** (CFR 41.8 / 41.10 / 45.3)		
EK1.01	Effect of battery discharge rates on capacity	3.3	3.7
EK1.02	Natural circulation cooling	4.1	4.4
EK2	**Knowledge of the interrelations between the and the following Station Blackout:** (CFR 41.7 / 45.7)		
EK2.01	Valves	2.0	2.2
EK2.02	Sensors, detectors and indicators	2.1*	2.2*
EK2.03	Controllers and positioners	1.9	2.1
EK2.04	Pumps		
EK2.05	Motors	2.0	2.2
EK2.06	Heat exchangers and condensers	1.7	2.1
EK2.07	Breakers, relays, and disconnects	2.2*	2.4*
EK3	**Knowledge of the reasons for the following responses as the apply to the Station Blackout:** (CFR 41.5 / 41.10 / 45.6 / 45.13)		
EK3.01	Length of time for which battery capacity is designed	2.7	3.4
EK3.02	Actions contained in EOP for loss of offsite and onsite power	4.3	4.6
	ABILITY		
EA1	**Ability to operate and monitor the following as they apply to a Station Blackout:** (CFR 41.7 / 45.5 / 45.6)		
EA1.01	In-core thermocouple temperatures	3.7	3.9
EA1.02	Manual ED/G start	4.3	4.4
EA1.03	Manual MT jacking	1.9*	1.9*
EA1.04	Reduction of loads on the battery	3.5	3.9
EA1.05	Battery, when approaching fully discharged	3.3	3.6
EA1.06	Restoration of power with one ED/G	4.1	4.5
EA1.07	Restoration of power from offsite	4.3	4.5

18	Describe the function of the following inverter indications and controls: • output amps • output voltage • output frequency • alternate AC source input frequency • pre-charge push-button • pre-charge light • in-sync light • alternate source off-frequency light • inverter supplying load light • alternate AC source supplying load light • main semi-conductor fuse failure light • low DC input voltage light • low AC output voltage light • high AC output voltage light • low alternate AC source voltage light • inverter failure light • overtemperature light • alarm bypass circuit trouble light • fan failure light • alarms bypassed key switch	X	X	X	X	X
19	Given a Limit and/or Precaution, associated with the 125 VDC and 120 VAC Vital Instrumentation and Control Power Systems, discuss its basis and applicability.	X	X	X	X	X
20	Describe the expected operation of the 125 VDC and 120 VAC Vital Instrumentation and Control Power Systems during a Blackout or LOOP (Loss of Off-Site Power) Event.	X	X	X	X	X

CLASSROOM TIME (Hours)

NLO	NLOR	LPRO	LPSO	LOR
		3	3	2

OBJECTIVES

	OBJECTIVE	NLO	NLOR	LPRO	LPSO	LOR
1	Explain the purpose for AP/15 (Loss of Vital or Aux Control Power). AP15001			X	X	X
2	Analyze the mitigating strategy (major actions) contained in the procedure. AP15002			X	X	X
3	Given scenarios describing accident events and plant conditions, evaluate the basis for any caution, note, or step. AP15003			X	X	X
4	Given scenarios describing accident events and plant conditions, evaluate conditions which require application of continuous action steps. AP15004			X	X	X

3.2 Abnormal and Emergency Operation

Objective # 20

During a blackout or LOOP event, on one or both trains, the essential motor control centers feeding the vital I & C battery chargers, associated with the affected train, will be load-shed by the diesel generator loading sequencer. Within eleven seconds after the diesel generator start signal the affected essential motor control centers and battery chargers will be reloaded onto the essential bus by the diesel generator loading sequencer.

During the time period that the battery chargers are de-energized, the batteries, alone, feed the vital instrumentation and control loads. Protective diodes, within each battery charger, prevent the associated battery from discharging through its battery charger when the charger is de-energized.

Objective # 21

During a safety injection the vital I & C battery chargers are treated as a safety injection load and should remain energized. However, during a blackout condition or a safety injection with a blackout the vital I & C battery chargers will first be load-shed and then reloaded, within eleven seconds, after the diesel generator start signal.

AP/1(2)/A/5500/07, Loss of Electrical Power directs the operator to realign the vital battery chargers once normal power is available. This is done by:

1. Determining which battery chargers are actually being powered from Unit 1 or Unit 2 (dependent upon which unit experienced the loss of electrical power).
2. Depressing the STOP push-button on the vital battery chargers that are being powered from the opposite unit (Unit 2 if the event was on Unit 1 / Unit 1 if the event was on Unit 2).

This is done because the loading sequencer will close the "m" contacts for all the battery chargers. However, the battery charger will only be receiving power, from the selected MCC, based on the breaker closed within the charger connection box (protected by the Kirk Key Interlock).

AP/1(2)/A/5500/15, Loss of Vital or Aux Control Power provides direction to the operator in diagnosing and responding to a loss of a Vital DC or AC Bus. Refer to current copy of this AP for Symptoms and Immediate Actions.

7.1 125 VDC/120 VAC Vital I&C Power Composite Drawing (01-06-97)

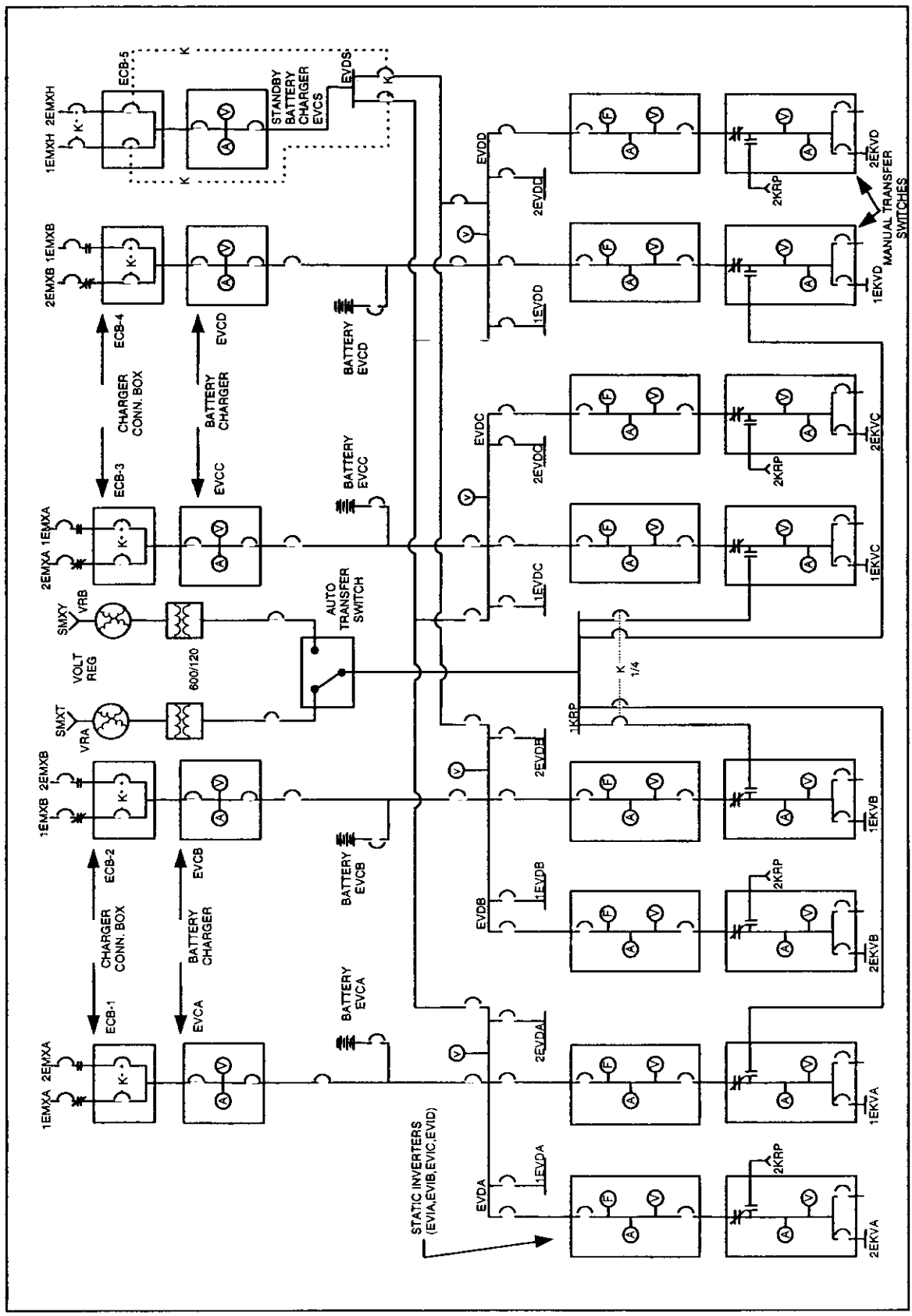

ACTION/EXPECTED RESPONSE	RESPONSE NOT OBTAINED

NOTE If any distribution center voltage goes down to 105 - 107 Volts, the associated battery has met its duty cycle requirement. Further depletion of the battery may result in battery damage. Opening the associated battery breaker when this voltage is reached will completely deenergize the associated distribution center.

__ 17. **IF AT ANY TIME dispatched operator notifies Control Room that distribution center voltage reaches limit in table below, THEN GO TO indicated step to remove battery from service:**

DISTRIBUTION CENTER	VOLTAGE LIMIT	STEP
DCA	107 Volts	Step 19
DCB	107 Volts	Step 20
EVDA	105 Volts	Step 21
EVDB	105 Volts	Step 22
EVDC	105 Volts	Step 23
EVDD	105 Volts	Step 24

__ 18. **Do not continue unless directed by Step 17.**

VCT level control will be affected by a loss of several control power busses (EVDA, EKVA, KXA, and KXB). Increased operator monitoring of VCT level will be necessary in these instances. On a loss of one of these buses, normal VCT make-up is unavailable, and VCT level is maintained by periodically swapping NV pump suction to the FWST. (FSAR sections consulted: 9.3.4.2, 6.3.2.2, 15.4.6.1) (Tech Specs consulted: 3.5.2)

- On a loss of a vital AC bus, the associated T-avg and power range channel will fail, which inputs the Reactor Control System. These malfunctioning instruments need to be removed from service in order to restore the reactor control system to operation, and to eliminate possible invalid alarms such as QPTR due to the malfunctioning power range detector. Steps to remove these instruments are in accordance with AP-16 (Malfunction of Nuclear Instrumentation). Removal of these instruments ensures proper operation of the Reactor Control System and various reactor power alarms such as QPTR and Power mismatch. (FSAR sections consulted: 7.7.1) (Tech Specs consulted: 3.2.4, 3.2.5)

- On a loss of KXA for Unit 1 (KXB for Unit 2), it is probable that a loss of letdown will occur due to NV-26 and NV-459 failing closed. No procedural method exists at this time to restore letdown without the use of one of these valves. Contingency actions to deal with Pressurizer level increasing are to minimize charging and for station management to evaluate performing a unit cooldown to shrink the Pressurizer water inventory until power is restored. Emergency boration will occur concurrently to ensure adequate shutdown margin exists during the cooldown. With charging at a minimum, only a small cooldown rate will be needed to accomplish this shrinkage. After verifying adequate shutdown margin, existing Operating Procedures will be used for initiating the cooldown. Credit for Xenon can be used in the SDM calculation for cooldowns to 500 Deg. (FSAR sections consulted: 4.3.2.4, 4.3.1.5, 15.4) (Tech Specs consulted: 3.1.1.1)

- One possible scenario that leads to a loss of a DC bus begins with the associated battery charger tripping. The battery will assume the loads immediately; but over time, battery voltage will decrease. At 115 volts an undervoltage annunciator will alarm in the control room, which is a symptom of this AP. Enclosure 2 will aid the operator in responding to this type of failure. Existing operating procedures will be utilized to restore a battery charger to service. However, if a charger cannot be started and battery voltage decreases to a set value (107 volts for aux control power battery), an operator will be dispatched to open the battery output breaker, thus fully deenergizing the DC bus. At 105 volts, station management will evaluate whether or not to open a vital DC battery output breaker. This is required for two reasons. First, DC components will begin to fail at a battery voltage less than that value. Secondly, the battery could be badly damaged if required to supply loads at a significantly low voltage. Below this voltage value, the battery has met its duty cycle requirements. Calc File # MCC-1381.06-00-0062 and MCC-1381.05-00-0200 substantiate these values. (FSAR sections consulted: 8.3.2, Table 8-13) (Tech Specs consulted: 3.8.2.1)

- The NF containment isolation valves fail closed on a loss of control power. If NF-233B (RB Glycol Return Cont Inside Isol) fails closed, it is imperative that the operator ensure that the supply side of the Reactor building header is also isolated to prevent a glycol spill from occurring inside containment. Guidance is given to perform this action as well as shutting down NF pumps, which would be running in a reduced flow condition. ESF alignment is unaffected by these actions. (FSAR sections consulted: 7.6.5.2.2, 6.2.2.15.1) (Tech Specs consulted: 3.6.3)

- For each control power bus, there is an enclosure identifying significant loads affected by the loss of that bus. These enclosures are for information only, and serve as a guide for the operator to use in determining Tech Spec concerns and additional operational impacts.

NCLOSURES:

Unit 1 Encl 1 Response to Degraded DC Bus Voltage: For the situation where a charger has tripped and the DC Battery is still carrying the bus, the bus voltage will degrade over time. A step in the body of this AP refers the Operator to this enclosure for compensatory actions. The Operator is reminded that under worst case situations, the Vital Batteries will last at least 1 hour, and the Aux Batteries will last at least 4 hours. Depending on which channel is lost and plant conditions, the batteries may last considerably longer. The point at which they're considered lost is when the voltage degrades to the point where the output breaker is opened (107VDC for Aux., 105VDC for Vital), as directed later in this enclosure. An overview of the enclosure is as follows:

First, the enclosure attempts to restore the affected charger to service using the following methods: swap power supplies to charger, check breaker alignment, cross tie to another bus, or use standby charger.

Secondly, the enclosure contains guidance in the event that a charger cannot be started. These actions will be implemented only if bus voltage reaches the undervoltage annunciator setpoint. At 115 volts, the battery still has significant life remaining, but comp measures should be implemented to conserve remaining battery power and prepare for total loss of DC bus. These actions include: (1) swapping the affected bus inverters to alternate source to extend battery life and prevent loss of associated AC bus, (2) reviewing the applicable load list enclosure(s) for the possibility of losing power to the bus, (3) opening the associated battery output breaker once the battery is exhausted. (Note that battery voltage is expected to decrease linearly over time from 115 volts to 105-107 volts, so the operator should be able to estimate when the battery will be exhausted.)

Unit 1 Encl 2 - 5
Unit 2 Encl 1 - 4 Restoring Power to Vital DC busses: (Note that Unit 2 only attempts to restore power to the Unit 2 panelboard. If the entire distribution center has lost power, Unit 1's AP will address this condition.)

The cautions at the beginning of the enclosure deal with the issue of a tripped breaker. Depending on plant conditions, closing a tripped breaker may be justified prior to visual inspection and troubleshooting. Getting the bus energized quickly to avoid major operational problems versus waiting until it's certain there is no fault on the bus may be worth it from a risk/reward standpoint. Past experience has shown that breakers are capable of tripping more than once to isolate fault conditions. On the other hand, if a fault is known to exist or the breaker is visibly damaged, it would be wise to isolate the fault and repair the breaker prior to energizing the bus, since a high potential for explosion exists upon closure of a degraded circuit (PIP 1-M96-3574). Another caution emphasizes the point of not standing in front of a tripped breaker when re-closing. Although this is a good precaution anytime a breaker is closed, it is especially pertinent in this case, since an unknown fault could cause breaker failure.

First, the enclosure attempts to reclose any tripped open panelboard breaker. If this works, the enclosure is exited. If this isn't the problem, the next steps open the supply breaker to the inverters (they're not running anyway), and evaluate placing the AC bus on KRP per applicable enclosure. Then the bus is energized from its charger or via tiebreakers, whichever is desired. Generally it is preferred to energize a DC bus with its charger instead of tiebreakers, because the tiebreakers don't meet Tech Spec operability requirements and places the system at reduced redundancy. In the step that cross ties busses, opening the Main Incoming Fuse to the Distribution Center could be extremely important because it prevents tying the sister charger to a potentially degraded battery, which could draw an excessive amount of current and trip the running charger and/or result in degraded voltage on sister distribution center as well.

1 Pt. Given the following conditions on Unit 1:

- The 125VDC/120VAC Auxiliary Control Power System is in normal alignment.
- Incoming breaker to DCA ~~trips open~~ have

Which one of the following describes the effect on KXA and how can the operator verify the actions occurred?
auto/manual

A. KXA auto swaps to its alternate AC source.
NC pump vibration monitors "in service".

B. KXA auto swaps to its alternate AC source.
Indicating light (control power) to 0RN-10AC (Train 1B & 2B LLI Supply) "lit"

C. KXA must be manually swapped to its alternate AC source.
NC pump vibration monitors "in service".

D. KXA must be manually swapped to its alternate AC source.
Indicating light (control power) to 0RN-10AC (Train 1B & 2B LLI Supply) "lit"

Bank Question: 1102 **Answer: A**

1 Pt. Given the following conditions on Unit 1:

- The 125VDC/120VAC Auxiliary Control Power System is in normal alignment
- Incoming breaker to DCA trips open

Which one of the following describes the effect on KXA and how can the operator verify the actions occurred?

A. KXA auto swaps to its alternate AC source.
NC pump vibration monitors "in service"

B. KXA auto swaps to its alternate AC source.
Indicating light (control power) to 0RN-10AC (Train 1B & 2B LLI Supply) "lit"

C. KXA must be manually swapped to its alternate AC source.
NC pump vibration monitors "in service"

D. KXA must be manually swapped to its alternate AC source.
Indicating light (control power) to 0RN-10AC (Train 1B & 2B LLI Supply) "lit"

Distracter Analysis:. McGuire consistently uses load lists to verify power sources energized

A. Correct:
B. Incorrect: Wrong load from KXA.
Plausible:
C. Incorrect: KXA will auto swap.
Plausible: If student confuses the Aux. Control Power system with the Vital I&C system.
D. Incorrect KXA will auto swap
Plausible: If student confuses the Aux. Control Power system with the Vital I&C system.

LEVEL: RO & SRO

KA: 000058 AK2.01 (3.7/4.1)

SOURCE: NEW

LEVEL OF KNOWLEDGE: Comprehension

AUTHOR: CWS

LESSON: OP-MC-EL-EPK

OBJECTIVES: OP-MC-EL-EPK obj. 5 and 6

REFERENCES: OP-MC-EL-EPK pg. 17 and 19.

CLASSROOM TIME (Hours)

NLO	NLOR	LPRO	LPSO	LOR
3.0	3.0	2.0	2.0	2.0

OBJECTIVES

	OBJECTIVE	NLO	NLOR	LPRO	LPSO	LOR
1	State the purpose of the 125 VDC and 240/120 VAC Auxiliary Control Power Systems. ELEPK001	X	X	X	X	
2	Draw a simplified composite of the 125 VDC and 240/120 VAC Auxiliary Control Power Systems as provided in Training Drawing 7.1, Auxiliary Control Power (EPK) Drawing. ELEPK002	X	X	X	X	
3	Provide a general description of the 125 VDC Auxiliary Control Power System. ELEPK003	X	X	X	X	
4	List the typical loads powered from the 125 VDC Auxiliary Control Power System. ELEPK004	X	X	X	X	
5	Provide a general description of the 240/120 VAC Auxiliary Control Power System. ELEPK005	X	X	X	X	
6	List the typical loads powered from the 120 VAC Auxiliary Control Power Panelboards. ELEPK006	X	X	X	X	
7	Describe the loading (sizing) capabilities associated with the 125 VDC Battery Chargers for the 125VDC Auxiliary Control Power System. ELEPK007	X	X	X	X	
8	Discuss the normal loading demands associated with the 125 VDC Battery Chargers for the 125VDC Auxiliary Control Power System. ELEPK008	X	X	X	X	

APE: 058 Loss of DC Power

K/A NO.	KNOWLEDGE	IMPORTANCE RO	IMPORTANCE SRO
AK1.	**Knowledge of the operational implications of the following concepts as they apply to Loss of DC Power: (CFR 41.8 / 41.10 / 45.3)**		
AK1.01	Battery charger equipment and instrumentation	2.8	3.1*
AK1.02	Electrical units: volts, amps, and dc	2.0	2.3
AK2.	**Knowledge of the interrelations between the Loss of DC Power and the following: (CFR 41.7 / 45.7)**		
AK2.01	Motors	1.9	2.2
AK2.02	Breakers, relays, and disconnects	2.2*	2.4*
AK3.	**Knowledge of the reasons for the following responses as they apply to the Loss of DC Power: (CFR 41.5,41.10 / 45.6 / 45.1)**		
AK3.01	Use of dc control power by D/Gs	3.4*	3.7
AK3.02	Actions contained in EOP for loss of dc power	4.0	4.2
	ABILITY		
AA1.	**Ability to operate and / or monitor the following as they apply to the Loss of DC Power: (CFR 41.7 / 45.5 / 45.6)**		
AA1.01	Cross-tie of the affected dc bus with the alternate supply	3.4*	3.5
AA1.02	Static inverter dc input breaker, frequency meter, ac output breaker, and ground fault detector	3.1*	3.1
AA1.03	Vital and battery bus components	3.1	3.3
AA2.	**Ability to determine and interpret the following as they apply to the Loss of DC Power: (CFR: 43.5 / 45.13)**		
AA2.01	That a loss of dc power has occurred; verification that substitute power sources have come on line	3.7	4.1
AA2.02	125V dc bus voltage, low/critical low, alarm	3.3*	3.6
AA2.03	DC loads lost; impact on ability to operate and monitor plant systems	3.5	3.9

240/120 VAC Auxiliary Control Power System

Objective # 5

The 120 VAC Auxiliary Control Power System consists of two 120 VAC auxiliary control power panelboards, two 240/120 VAC operator aid computer power panelboards, two 240/120 VAC regulated power panelboards, two 240/120 VAC distribution centers, two 600 VAC regulators, two 600/240/120 VAC transformers, and five inverters, a breaker alignment panel, and four disconnect switches.

The two 120 VAC auxiliary power panelboards (KXA and KXB) will normally receive power through static inverters KXA and KXB. A regulated power supply (MKA for Unit 1 and MKB for Unit 2) is also provided, as an alternate power source, to allow an automatic uninterrupted power transfer to these panelboards during

- an inverter undervoltage condition,
- an inverter overcurrent condition, or
- an inverter failure

The two 240/120 VAC operator aid computer power panelboards (1KU and 2KU) will normally receive power through static inverters 1KU and 2KU. A regulated power supply (MKA for Unit 1 and MKB for Unit 2) is also provided, as an alternate power source, to allow an automatic uninterrupted power transfer to these panelboards during

- an inverter undervoltage condition,
- an inverter overcurrent condition, or
- an inverter failure

The two 240/120 VAC regulated power panelboards (KRA and KRB) receive power from their respective 240/120 VAC distribution center (MKA and MKB). Either one of the two regulated power supplies (KRA or KRB) can be aligned to supply both of the distribution centers. **However, when one regulated power transformer is connected to both distribution centers, it can only supply three of the six possible loads safely. If one of the two regulated power supplies (KRA or KRB) is aligned to supply both MKA and MKB, then the other regulated power supply can not be connected to its respective distribution center. This configuration restriction is provided by use of Kirk-Key interlocks and is also procedurally controlled.**

A spare inverter SKX, with static transfer switch and manual bypass panel can also be used to power any of the four 120 VAC panelboards (KXA, 1KU, KXB, 2KU). Power is routed through a breaker alignment panel that is provided with kirk key interlocks to ensure only one panelboard is being powered from the spare inverter SKX. The power is connected to the panelboards through a power disconnect switch (one for each of the four normal inverters) – see drawing 7.8. With this disconnect switch open, the normal inverter system is totally isolated from the panelboards.

Objective # 6

The following is a partial listing of typical loads that are powered from the 240/120 VAC Auxiliary Control Power Distribution Centers and power panelboards:

KXA/KXB

- **Main Control Boards**
- **Main Turbine Controls**
- **FWPT Controls**
- **Turbine Supervisory Instruments**
- **NCP Vibration Monitors**
- **Plant Security System**
- **Aux Feedpump Panels**

KRA/KRB

- **Moveable Incore Instrument Consoles**
- **Area Radiation Monitor System Cabinets**
- **Loose Parts Monitoring Cabinets**
- **MSR Control Cabinets**
- **CRDM Auxiliary Power Cabinets**
- **Generator Gas Dryers**
- **VE Annulus Door Monitoring Systems**
- **FWPT Signal Processors**
- **DRPI**

During a Loss of ICW

1 Pt. Which one of the following conditions would immediately require tripping the reactor on a loss of Instrument Air? Inst Air

A. **1RN-252B (RB Non Ess Supp Cont Outside Isol) fails closed and reactor coolant pump stator temperatures are 301 degrees and going up.**

B. ~~**Steam Generator levels are going down in an uncontrolled manner.**~~ RFW controllers malfunction 100% demand AND S/G levels are going down.

C. **Reactor coolant system temperature less than 557 degrees and going down.**

D. **Pressurizer level going up in an uncontrolled manner.**

Bank Question: 1103 ***Answer: B***

1 Pt. Which one of the following conditions would immediately require tripping the reactor on a loss of Instrument Air?

A. 1RN-252B (RB Non Ess Supp Cont Outside Isol) fails closed and reactor coolant pump stator temperatures are 301 degrees and going up.

B. Steam Generator levels are going down in an uncontrolled manner.

C. Reactor coolant system temperature less than 557 degrees and going down.

D. Pressurizer level going up in an uncontrolled manner.

Distracter Analysis:. The only situation that requires immediately tripping the reactor is S/G levels going down. In time the NC pumps would have to be tripped but not at this time.

A. Incorrect:
Plausible:
B. Correct:
C. Incorrect:
Plausible:
D. Incorrect
Plausible:

LEVEL: RO and SRO

KA: 000065 EA2.06 (3.6*/4.2)

SOURCE: NEW

LEVEL OF KNOWLEDGE: Comprehensive

AUTHOR: CWS

LESSON: OP-MC-AP-22

OBJECTIVES: OP-MC-AP-22 Obj. 3

REFERENCES: AP-22 Background Document pages 13-18
AP-22 pages 8-10

APE: **065 Loss of Instrument Air**

ABILITY

AA1.	**Ability to operate and / or monitor the following as they apply to the Loss of Instrument Air: (CFR 41.7 / 45.5 / 45.6)**		
AA1.01	Remote manual loaders	2.7*	2.5
AA1.02	Components served by instrument air to minimize drain on system	2.6	2.8
AA1.03	Restoration of systems served by instrument air when pressure is regained	2.9	3.1
AA1.04	Emergency air compressor	3.5*	3.4*
AA1.05	RPS	3.3*	3.3*
AA2.	**Ability to determine and interpret the following as they apply to the Loss of Instrument Air: (CFR: 43.5 / 45.13)**		
AA2.01	Cause and effect of low-pressure instrument air alarm	2.9	3.2
AA2.02	Relationship of flow readings to system operation	2.4*	2.6*
AA2.03	Location and isolation of leaks	2.6	2.9
AA2.04	Typical conditions which could cause a compressor trip (e.g., high temperature)	2.2	2.7
AA2.05	When to commence plant shutdown if instrument air pressure is decreasing	3.4*	4.1
AA2.06	When to trip reactor if instrument air pressure is de-creasing	3.6*	4.2
AA2.07	Whether backup nitrogen supply is controlling valve position	2.8*	3.2*
AA2.08	Failure modes of air-operated equipment	2.9*	3.3

ACTION/EXPECTED RESPONSE	RESPONSE NOT OBTAINED

NOTE CF Control Valves will fail closed on low VI pressure, which may result in AMSAC actuation and Lo Lo S/G level.

__ 12. **Check S/G levels - AT PROGRAMMED LEVEL.**

IF S/G levels are going down in an uncontrolled manner, THEN:

__ a. Trip reactor.

__ b. Continue with this procedure as time allows.

__ c. GO TO EP/1/A/5000/E-0 (Reactor Trip or Safety Injection).

__ 13. **Check VI pressure - GREATER THAN 85 PSIG.**

Align N_2 backup from CLAs to Pzr PORVs by opening the following valves:

__ • 1NI-430A (Emerg N2 From CLA To 1NC-34A)

__ • 1NI-431B (Emerg N2 From CLA To 1NC-32B & 36B).

__ 14. **Check fuel movement - IN PROGRESS.**

__ GO TO Step 16.

__ 15. **Notify fuel handling SRO to perform the actions of Enclosure 10 (Fuel Handling Crew Actions during a Loss of VI).**

__ 16. **Check Unit Status - IN MODE 3 OR 4.**

__ **Observe Note prior to Step 18 and GO TO Step 18.**

ACTION/EXPECTED RESPONSE	RESPONSE NOT OBTAINED

NOTE Steam drains fail open on loss of VI and can cause uncontrolled cooldown.

17. **Check NC temperatures:**

__ • **IF** any NC pump on, **THEN** check NC T-Ave - STABLE OR TRENDING TO 557° F.

OR

__ • **IF** all NC pumps off, **THEN** check NC T-Colds - STABLE OR TRENDING TO 557° F.

__ **IF temperature less than 557° F AND going down, THEN perform Enclosure 7 (Uncontrolled NC System Cooldown).**

NOTE RN flow is isolated to reactor bldg nonessential header (NC pumps) on loss of VI.

18. **Check the following valves - OPEN:**

__ • 1RN-252B (RB Non Ess Sup Cont Outside Isol)

__ • 1RN-277B (RB Non Ess Ret Cont Outside Isol).

__ **Monitor NC pump trip criteria on foldout page.**

__ 19. **Check CA pumps - OFF.**

__ **IF CA flow goes up in an uncontrolled manner, THEN implement CA flow control criteria on foldout page.**

NOTE
- Pzr heaters will energize if Pzr level is 5% greater than control setpoint.
- Pzr spray is not available on loss of VI.

20. **Operate Pzr heaters as required to:**

__ • Maintain Pzr liquid space temperature at Pzr vapor space temperature.

__ • Minimize opening of Pzr PORVs.

ACTION/EXPECTED RESPONSE	RESPONSE NOT OBTAINED

NOTE
- 1NV-238 (Charging Line Flow Control) and 1NV-241 (Seal Inj Flow Control) fail open on loss of VI.
- Normal and excess letdown isolate on loss of VI. Enclosure 8 (Pressurizer Level Control) contains actions to limit Pzr fill rate.

__ 21. **Check Pzr level - AT PROGRAMMED LEVEL.**

__ **IF Pzr level going up in an uncontrolled manner, THEN control Pzr level PER Enclosure 8 (Pressurizer Level Control).**

__ 22. **Check VI pressure - LESS THAN 60 PSIG.**

Perform the following:

__ a. IF AT ANY TIME VI pressure goes below 60 PSIG, THEN perform steps 23 through 28.

__ b. GO TO Step 29.

23. **Check all RN Pumps on both Units - RUNNING.**

__ **GO TO Step 25.**

__ • 1A RN pump

__ • 1B RN pump

__ • 2A RN pump

__ • 2B RN pump.

CLASSROOM TIME (Hours)

NLO	NLOR	LPRO	LPSO	LOR
		1.0	1.0	1.0

OBJECTIVES

	OBJECTIVE	NLO	NLOR	LPRO	LPSO	LOR
1	Explain the purpose for AP/22 (Loss of VI). AP22001			X	X	X
2	Analyze the mitigating strategy (major actions) contained in the procedure. AP22002			X	X	X
3	Given scenarios describing accident events and plant conditions, evaluate the basis for any caution, note, or step. AP22003			X	X	X
4	Given scenarios describing accident events and plant conditions, evaluate conditions which require application of continuous action steps. AP22004			X	X	X

With respect to throttling closed NI-173 and -178, these valves have a seal-in circuit that will fully close the valve when it reaches 95% closed. However, it's possible that these valves may seal-in and close sooner (80-90% closed), due to the difficulty in setting up these valves during maintenance. If the valves inadvertently close, ND pump flow still exists through the 2-inch miniflow line.

If the ND pumps are cavitating, which could occur if ND flow is uncontrollably high, the ND pumps are stopped and the Operator is directed to AP-19 to deal with the loss of ND. AP22 will be performed as time allows.

The step also re-establishes NC temperature control, first by controlling ND bypass flow around the ND HXs via ND-18 or 33. Temperature is also adjusted by throttling KC to control ND discharge temperature. If NC temperature is greater than 200°F, the potential exists to boil KC if it is throttled to a low flow rate, so direction is given to maintain KC flow to the ND Hx greater than 2000 GPM in this case.

REFERENCES:
Engineering letter attached to 50.59 for rev 17 of AP/1/A/5500/22 and rev 15 of AP/2/A/5500/22.

STEP 12:

PURPOSE:

Prompt the operators to watch S/G levels because the CF control valves fail closed on a loss of VI. If S/G levels can't be controlled, the Operator is directed to trip the reactor.

DISCUSSION:

The CF control valves use 0 – 60# valve operating air. Depending on the nature of the problem with VI and considering line losses, etc., these valves could start failing at 70# or more VI pressure as indicated in the control room. The operating philosophy regarding loss of Main Feedwater at power is to trip the reactor. This will prevent challenging the Lo-Lo S/G automatic reactor trip and will result in better initial conditions at the time of the manual trip. Refer to PIP 2-M-87-0208 where a automatic reactor trip occurred 5 min after loss of offsite power due to loss of VI to the CF valves. If the CF valves were to get to less than 25% open (for 30 sec or more) on 3 out of 4 S/Gs, an AMSAC could also be generated. For most scenarios, it's likely the operator will have manually tripped the reactor prior to this occurring.

REFERENCES:
PIP 2-M-87-0208

STEP 13:

PURPOSE:

The Pzr PORVs are air operated. With a loss of VI, N_2 from the CLAs are aligned to supply the motive force to allow operation of the PORVs. A check valve prevents loss back to VI.

DISCUSSION:

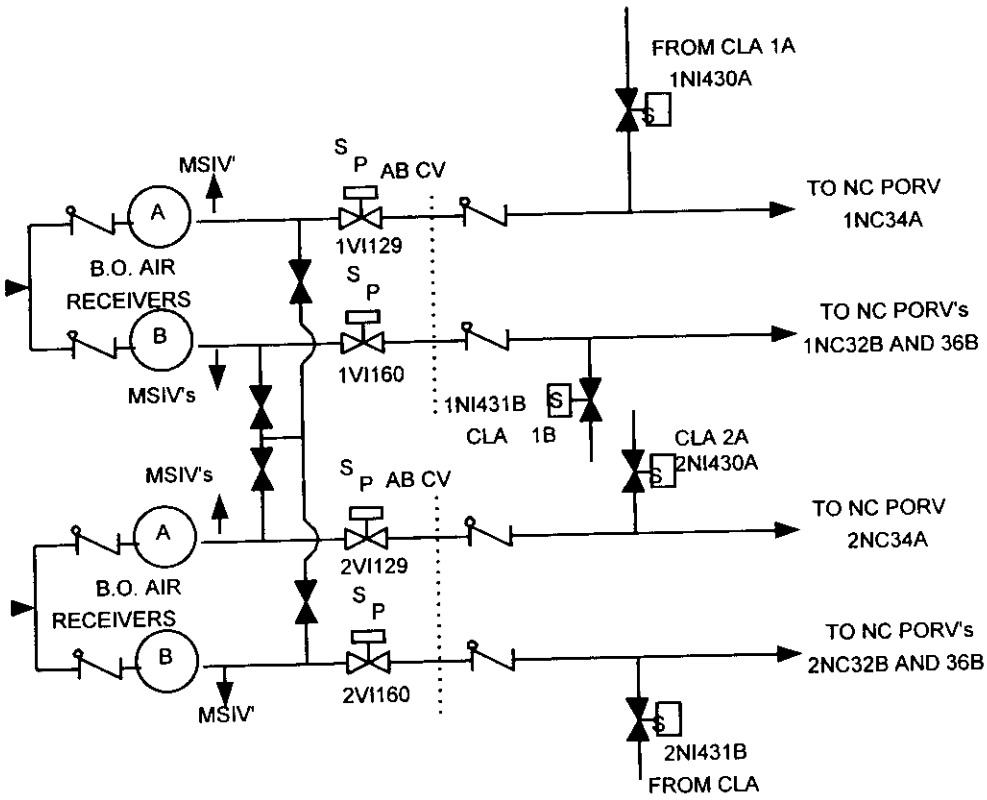

REFERENCES:
flow diagram 1605-01.03

STEP 14:

PURPOSE:

Procedure flow-path-controlling step. The next step applies if fuel handling is in progress. If not in progress, the operator is directed around this step.

DISCUSSION:

STEP 15:

PURPOSE:

Ensure any fuel assembly remains covered with water.

DISCUSSION:

With the loss of VI, the possibility exists to lose seal air pressure to the reactor cavity seal or transfer canal weir gate seal. Direction is given in Encl 10 (U-2 Encl 5) to lower fuel assemblies in safe locations and close KF-122 (to prevent loss of pool inventory to refueling canal).

REFERENCES:

STEP 16:

PURPOSE:

Procedure flow-path-controlling step. If the reactor is in Mode 3 or 4, the operator will check if an uncontrolled cooldown exists in the next step. Otherwise, the operator is directed to bypass the next step.

DISCUSSION:

During power generation (Modes 1 & 2) an uncontrolled cooldown due to steam drains failing open or CA flow is not a concern. Power generation should produce enough heat to hold temperature for these conditions. If other events were occurring (i.e., steam leak) that could cause a cooldown, the appropriate procedures for those events should address their concerns.

In Mode 3 or 4, steam drains or CA flow could cause an uncontrolled cooldown. (PIP M-99-01606)

In Mode 5 or below (less than 200°F), there isn't enough steam pressure to cause significant heat losses through steam drains, etc.

REFERENCES:
PIP M-99-01606

STEP 17:

PURPOSE:

Prevent an uncontrolled cooldown caused by the steam drains or CA flow control valves that fail open on a loss of VI.

DISCUSSION:

If temperature is less than 557°F and going down (uncontrolled cooldown), then Encl 7 (U-2 Encl 2) is performed. Encl 7 (U-2 Encl 2) assumes loss of VI with the plant off-line. If the plant were operating with a loss of VI, the plant trip would have the operator control cooldown per E-0 guidance. Since the plant is likely Mode 3 or below for this criteria to apply, the actions for controlling cooldown are just: 1) Close MSIVs, 2) control CA, and 3) ensure S/Gs bottled up (blowdown and steamline drains). This enclosure is simplified compared to post-trip efforts to control cooldown. A loss of VI should likely result in steam dumps and CF control valves failing closed. Closing the MSIVs should isolate the downstream stream drain valves that may have failed open.

STEP 18:

PURPOSE:

Prevent damage to the NC pumps because of loss of cooling.

DISCUSSION:

The RN valves that supply cooling to the NC pumps fail closed on a loss of VI. In this event, direction is given to monitor for NC pump trip criteria per the foldout page. The operator is not directed to immediately trip the NC pumps on loss of cooling because considerable time (maybe up to 30 minutes) may elapse before the trip criteria is reached. This will allow some time to restore VI before trip criteria is reached.

REFERENCES:

STEP 19:

PURPOSE:

Prevent an uncontrolled cooldown and prevent overfilling the S/Gs.

DISCUSSION:

If the CA pumps are running, then the RNO is performed. If the loss of VI is severe enough, the CA flow control valves fail open, and direction is given to control CA per foldout page using Generic Encl 16. Generic Encl 16 describes how to control CA flow. It doesn't specify when to control it, so direction is given in the foldout page on when to control. Maintaining greater than 450 GPM until at least one S/G NR is greater than 11% ensures an adequate heat sink is maintained.

REFERENCES:

STEP 20:

PURPOSE:

Prevent unnecessary opening of the Pzr PORVs.

DISCUSSION:

On a loss of VI, letdown is lost. With continued charging, without a cooldown occurring, Pzr level will be increasing. Pzr pressure will increase when level increases. In addition, the Pzr Backup Heaters energize automatically on a 5% high level deviation. If the heaters are left on, Pzr pressure will increase even faster than due to just the level increase. As pressure increases, the Pzr Spray Valves will not open if the loss of VI is severe enough. With this scenario, pressure will increase until the master controller reaches a setpoint of 81.2% (this could be prior to reaching 2335# due to integral build up) which opens PORV NC-34. To help prevent this, direction is given in this step to operate the Pzr heaters as required. To turn off the heaters, the operator would select "MAN" on the heater control, then depress "OPEN" on the heater breaker control. Consideration should be given to not allow too much subcooling on the Pzr liquid space, to avoid large uncontrolled pressure decreases during plant recovery. Note that as long as the liquid space temperature is below saturation, the heaters would not be contributing to the opening of the PORVs.

REFERENCES:

STEP 21:

PURPOSE:

Prevent Pzr overfill.

DISCUSSION:

On a loss of VI, NV-238 & 241 fail open and normal &excess letdown fail closed. With these failure modes, the potential exists for maximum charging with no letdown. At approximately 130 gallons/percent Pzr level, Pzr level could increase more than a percent/min following a loss of VI. If Pzr level is high and going up in an uncontrolled manner, the RNO gives direction to control level per Encl 8 (U-2 Encl 3). This enclosure isolates the normal charging flowpath. This leaves the seal water passing through the thermal barriers into the NC system as the only inventory gain. At 76% Pzr level, Encl 8(U-2 Encl 3) directs throttling NV-238 to further limit the inventory gain. At 96%, the enclosure utilizes the head vents to prevent the Pzr from going solid. The head vents are sized to pass at least 30 gpm (per Ken Pitzer). This should compensate for the assumed 20 gpm flow into the system past the NCP thermal barriers, maintaining NC inventory stable. (PIP M-97-03795, CA #3)

REFERENCES:
PIP M-97-03795, CA #3

STEP 22:

PURPOSE:

Procedure flow-path-controlling step to bypass the next several steps if VI pressure is greater than 60 #.

DISCUSSION:

The following few steps provide compensatory actions for VI valves that may start failing closed/open at less than 60#. If VI pressure is greater than 60#, these steps should not be applicable.

REFERENCES:

1 Pt. Given the following conditions on Unit 1:

- Unit 1 initially at 100% normal power
- A Safety Injection has occurred due to a LOCA outside containment
- LOCA Outside containment was on the '1A" train of ND
- Leak has been isolated and '1A' ND train secured

Which one of the following describes the heat removal mechanism that is utilized to stabilize the plant ***immediately*** after the leak is isolated using the emergency procedures?

A. NC feed and bleed

B. Steam Generators

C. '1B' ND in ~~the~~ RHR mode

D. '1B' ND in ~~the~~ CLR mode

Bank Question: 1104 **Answer: B**

1 Pt. Given the following conditions on Unit 1:

- Unit 1 initially at 100% normal power
- A Safety Injection has occurred due to a LOCA outside containment
- LOCA Outside containment was on the '1A" train of ND
- Leak has been isolated and '1A' ND train secured

Which one of the following describes the heat removal mechanism that is utilized to stabilize the plant ***immediately*** after the leak is isolated using the emergency procedures?

A. NC feed and bleed

B. Steam Generators

C. '1B' ND in the RHR mode

D. '1B' ND in the CLR mode

Distracter Analysis: Once the LOCA has been isolated the concern now is terminated SI. The strategy used in the emergency procedures is to use steam generators.

A. **Incorrect**: would initiate a feed and bleed for this scenario
Plausible: if the LOCA could not be isolated then core cooling is via feed and bleed

B. **Correct**: Answer

C. **Incorrect**: would ND because and temperature will remain to high for place ND in service
Plausible:

D. **Incorrect**: no water in sump to go to CLR
Plausible:

LEVEL: RO & SRO

KA: W/E04 EK2.2 (3.5/3.9)

SOURCE: NEW

LEVEL OF KNOWLEDGE: Comprehension

AUTHOR: CWS

LESSON:

OBJECTIVES:

REFERENCES: EP/ES-1.1 page 14

Westinghouse
E04 LOCA Outside Containment

K/A NO. KNOWLEDGE

EK1. Knowledge of the operational implications of the following concepts as they apply to the (LOCA Outside Containment)
(CFR: 41.8 / 41.10, 45.3)

EK1.1 Components, capacity, and function of emergency systems.
IMPORTANCE RO 3.5 SRO 3.9

EK1.2 Normal, abnormal and emergency operating procedures associated with (LOCA Outside Containment).
IMPORTANCE RO 3.5 SRO 4.2

EK1.3 Annunciators and conditions indicating signals, and remedial actions associated with the (LOCA Outside Containment).
IMPORTANCE RO 3.5 SRO 3.9

EK2. Knowledge of the interrelations between the (LOCA Outside Containment) and the following:
(CFR: 41.7 / 45.7)

EK2.1 Components, and functions of control and safety systems, including instrumentation, signals, interlocks, failure modes, and automatic and manual features.
IMPORTANCE RO 3.5 SRO 3.9

EK2.2 Facility's heat removal systems, including primary coolant, emergency coolant, the decay heat removal systems, and relations between the proper operation of these systems to the operation of the facility.
IMPORTANCE RO 3.8 SRO 4.0

EK3. Knowledge of the reasons for the following responses as they apply to the (LOCA Outside Containment)
(CFR: 41.5 / 41.10, 45.6, 45.13)

EK3.1 Facility operating characteristics during transient conditions, including coolant chemistry and the effects of temperature, pressure, and reactivity changes and operating limitations and reasons for these operating characteristics.
IMPORTANCE RO 3.2 SRO 3.5

ACTION/EXPECTED RESPONSE	RESPONSE NOT OBTAINED

14. **Check steam dumps as follows:**

a. Check condenser available:

__ • "C-9 COND AVAILABLE FOR STEAM DUMP" status light (1SI-18) - LIT.

__ • MSIVs on intact S/Gs - OPEN.

a. Perform the following:

__ 1) IF SM PORV Reset lights are lit, THEN GO TO Step 14.g.

2) IF any S/G pressure is less than 775 PSIG, OR is faulted, THEN:

__ a) Ensure NC System depressurized to less than 1955 PSIG.

__ b) Ensure Low Pressure Steamline Isolation signal is blocked.

__ c) Maintain NC pressure less than 1955 PSIG.

__ 3) Reset Main Steam Isolation.

__ 4) Close SM PORV manual loaders.

__ 5) Select "MANUAL" on "SM PORV MODE SELECT".

__ 6) Reset SM PORVs.

__ 7) Request STA to assist in monitoring NC pressure and temperature.

CAUTION **If Pzr is solid, lowering intact S/G pressures too rapidly can cause a loss of NC subcooling.**

NOTE Quickly stabilizing NC temperature will help prevent overfilling Pzr.

__ 8) Manually operate intact S/G(s) SM PORVs as required to stabilize NC T-Hots.

(RNO continued on next page)

1 Pt.

Unit 1 has experienced a feedwater line break inside containment and a total loss of feedwater at 2:00 AM. FR-H.1 has been entered and feed and bleed of the NC system was initiated at 2:30 AM. Shortly after opening the PORVs, the 1B CA pump is returned to service and a source of feedwater is available. The operators are directed to restore steam generator level for a heat sink per FR-H.1.

Given the following conditions at 2:45 AM:

Indication	A Loop	B Loop	C Loop	D Loop
S/G WR level (%)	19	~~9~~ ~~13~~ (9)	~~11~~ ~~16~~ (11)	~~10~~ ~~14~~ (16)

- Containment pressure = 3.5 psig
- Core exit T/Cs are stable at an average value = 560 °F

To which steam generator(s) would CA flow be restored? AND
What limitations are required on CA flow rates?

A. **S/G A**
100 gpm limitation on CA flow rate

B. **Either S/Gs A or S/G C**
No limitation on CA flow rate

C. **S/G C**
100 gpm limitation on CA flow rate

D. **Both S/Gs C and D**
No limitation on CA flow rate

To test ACC you must place s/G lvls > 12%

Bank Question: 1105 **Answer: C**

1 Pt.

Unit 1 has experienced a feedwater line break inside containment and a total loss of feedwater at 2:00 AM. FR-H.1 has been entered and feed and bleed of the NC system was initiated at 2:30 AM. Shortly after opening the PORVs, the 1B CA pump is returned to service and a source of feedwater is available. The operators are directed to restore steam generator level for a heat sink per FR-H.1.

Given the following conditions at 2:45 AM:

Indication	A Loop	B Loop	C Loop	D Loop
S/G WR level (%)	19	9	11	10

- Containment pressure = 3.5 psig
- Core exit T/Cs are stable at an average value = 560 °F

To which steam generator(s) would CA flow be restored?
What limitations are required on CA flow rates?

A. **S/G A**
100 gpm limitation on CA flow rate

B. **Either S/Gs A or S/G C**
No limitation on CA flow rate

C. **S/G C**
100 gpm limitation on CA flow rate

D. **Both S/Gs C and D**
No limitation on CA flow rate

Distracter Analysis:.

A. **Incorrect**: "A" CA Pump not available.
Plausible:

B. **Incorrect**: Flow limited to 100gpm.
Plausible:

C. **Correct**:
Plausible:

D. **Incorrect** Only feed 1 S/G and flow limited to 100gpm.
Plausible:

LEVEL: RO & SRO

KA: W/E05 EK1.1 (3.8/4.1)

SOURCE: NEW

LEVEL OF KNOWLEDGE: Analysis

AUTHOR: CWS

LESSON: OP-MC-EP-FRH

OBJECTIVES: OP-MC-EP-FRH Obj.4

REFERENCES: OP-MC- EP-FRH pg.32
EP/FR-H.1 pgs.5and 6

CLASSROOM TIME (Hours)

NLO	NLOR	LPRO	LPSO	LOR
		3	3	2.5

OBJECTIVES

SEQ	OBJECTIVE	NLO	NLOR	LPRO	LPSO	LOR
1	Explain the purpose of each procedure in the FR-H series. EPFRH001			X	X	
2	Discuss the entry and exit guidance for each procedure in the FR-H series. EPFRH002			X	X	
3	Discuss the mitigating strategy (major actions) of each procedure in the FR-H series. EPFRH003			X	X	X
[redacted]	Discuss the basis for any note, caution or step for each procedure in the FR-H series. EPFRH004			X	X	X
5	Given the Foldout page, discuss the actions included and the basis for these actions. EPFRH005			X	X	X
6	Given the appropriate procedure, evaluate a given scenario describing accident events and plant conditions to determine any required action and its basis. EPFRH006			X	X	X
7	Discuss the time critical task(s) associated with the FR-H series procedures including the time requirements and the basis for these requirements. EPFRH007			X	X	X

INSTRUCTOR ACTIVITY

1. Lecture: Detailed Description of Procedural Steps (Continued)

   a. Emphasize:

   Step 7:

   - The use of the following FR-H.1, Enclosures:
   - Enclosure 4 (CA Valve Alignment)
   - Enclosure 5 (Local CA Valve Alignment)
   - After initiating feed and bleed, the operator will continue to attempt to restore a heat sink. In the event a heat sink is restored, the operator is directed to remain in FR-H.1 until after the feed and bleed is terminated.
   - The plant conditions, which require an exit transition from FR-H.1 to the procedure and step in effect.
   - It is expected in Enclosure 4 the operator will know if RN supply to CA pumps suction is required open. A check of suction pressure would not be appropriate, since once RN is open, normal suction pressure will be restored.
   - [redacted]

ACTION/EXPECTED RESPONSE	RESPONSE NOT OBTAINED

7. (Continued)

__ e. Check total flow to S/G(s) - GREATER THAN 450 GPM.

e. Perform the following:

__ 1) **IF** any CA pump is started, **AND** Step 35 has been implemented, **THEN GO TO** Step 7.h.

__ 2) **IF** no CA pump can be started, **THEN** dispatch operator and maintenance to CA pumps to try to restore one CA pump to service.

__ 3) Dispatch operator to ensure CA valves aligned **PER** Enclosure 5 (Local CA Valve Alignment).

__ 4) **GO TO** Step 8.

__ f. Check feed and bleed - ESTABLISHED PER STEPS 21 through 25.

__ f. **RETURN TO** procedure and step in effect.

__ g. **GO TO** Step 37.

__ h. [redacted] 12% [redacted]

h. Perform the following:

__ 1) Throttle open CA control valves to establish CA flow to S/Gs.

__ 2) **GO TO** Step 37.

ACTION/EXPECTED RESPONSE	RESPONSE NOT OBTAINED

7. (Continued)

NOTE
- It may be preferrable to feed 1B or 1C S/G first, to maintain steam supply for TD CA pump
- Selecting S/G with highest level will reduce risk of thermal shock to S/G when reestablishing feed flow.

__ i. Check core exit T/Cs - STABLE OR GOING DOWN.

i. Perform the following:

__ 1) Throttle open CA control valve to one S/G to establish flow rate required to lower core exit T/Cs.

__ 2) **IF** core exit T/Cs continue to go up, **THEN** throttle open CA control valve to feed another S/G as required to lower core exit T/Cs.

__ 3) **GO TO** Step 7.m.

__ j. Slowly throttle open CA control valve to [redacted] to establish feed flow less than or equal to 100 GPM.

__ k. [redacted] until S/G WR level is greater than 12% (17% ACC).

__ l. **WHEN** S/G W/R level is greater than 12% (17% ACC), **THEN** feed flow may be raised greater than 100 GPM.

__ m. Check S/G W/R levels on intact S/Gs with feed flow isolated - ANY GREATER THAN 12% (17% ACC).

__ m. **GO TO** Step 7.o.

__ n. Slowly establish flow to any available intact S/G with level greater than 12% (17% ACC).

o. Do not continue until the following are met:

__ • NC T-Hot associated with a S/G being fed - GOING DOWN

__ • Core Exit T/Cs - GOING DOWN.

1 Pt. Given the following conditions on Unit 1:

- LOCA in containment
- Control room has transferred to ECA 1.1 (Loss of Emergency Coolant Recirculation) due to '1A' Train ND pump being out of service for maintenance and 1NI184B (RB Sump to Train B ND and NS) failing to open.
- An NLO reports that 1NI -184B has been locally opened

Which one of the following is the proper operator response based on the above plant conditions?

A. Remain in ECA 1.1 to limit FWST depletion.

B. Transfer to ES 1.3 (Transfer to Cold Leg Recirculation) with '1B' ND supplying only the '1B' NI and '1B' NV pumps.

C. Transfer to ES 1.3 with '1B' ND supplying both trains of NI and NV pumps.

D. Remain in ECA 1.1; depressurize the NC system to allow ND injection.

MAINTENANCE => CAN GET TRAIN A BACK

Bank Question: 1106 **Answer: C**

1 Pt. Given the following conditions on Unit 1:

- LOCA in containment
- Control room has transferred to ECA 1.1 (Loss of Emergency Coolant Recirculation) due to '1A' Train ND pump being out of service for maintenance and 1NI184B (RB Sump to Train B ND and NS) failing to open.
- An NLO reports that 1NI -184B has been locally opened

Which one of the following is the proper operator response based on the above plant conditions?

A. Remain in ECA 1.1 to limit FWST depletion.

B. Transfer to ES 1.3 (Transfer to Cold Leg Recirculation) with '1B' ND supplying only the '1B' NI and '1B' NV pumps.

C. Transfer to ES 1.3 with '1B' ND supplying both trains of NI and NV pumps.

D. Remain in ECA 1.1; depressurize the NC system to allow ND injection.

Distracter Analysis:.

A. Incorrect:
Plausible:
B. Incorrect:
Plausible:
C. Correct:
D. Incorrect
Plausible:

LEVEL: RO & SRO

KA: W/E11 EK1.1 (3.7/4.1)

SOURCE: NEW

LEVEL OF KNOWLEDGE: Analysis

AUTHOR: CWS

LESSON: OP-MC-PS-ND

OBJECTIVES: OP-MC-PS-ND Obj. 8

REFERENCES: OP-MC-PS-ND page 49

Westinghouse
E11 Loss of Emergency Coolant Recirculation

K/A NO. KNOWLEDGE

EK1. Knowledge of the operational implications of the following concepts as they apply to the (Loss of Emergency Coolant Recirculation)
(CFR: 41.8 / 41.10 / 45.3)

EK1.1 Components, capacity, and function of emergency systems.
IMPORTANCE RO 3.7 SRO 4.0

EK1.2 Normal, abnormal and emergency operating procedures associated with (Loss of Emergency Coolant Recirculation).
IMPORTANCE RO 3.6 SRO 4.1

EK1.3 Annunciators and conditions indicating signals, and remedial actions associated with the (Loss of Emergency Coolant Recirculation).
IMPORTANCE RO 3.6 SRO 4.0

EK2. Knowledge of the interrelations between the (Loss of Emergency Coolant Recirculation) and the following:
(CFR: 41.7 / 45.7)

EK2.1 Components, and functions of control and safety systems, including instrumentation, signals, interlocks, failure modes, and automatic and manual features.
IMPORTANCE RO 3.6 SRO 3.9

EK2.2 Facility's heat removal systems, including primary coolant, emergency coolant, the decay heat removal systems, and relations between the proper operation of these systems to the operation of the facility.
IMPORTANCE RO 3.9 SRO 4.3

EK3. Knowledge of the reasons for the following responses as they apply to the (Loss of Emergency Coolant Recirculation)
(CFR: 41.5 / 41.10, 45.6, 45.13)

EK3.1 Facility operating characteristics during transient conditions, including coolant chemistry and the effects of temperature, pressure, and reactivity changes and operating limitations and reasons for these operating characteristics.
IMPORTANCE RO 3.3 SRO 3.9

OBJECTIVES

	OBJECTIVE	NLO	NLOR	LPRO	LPSO	LOR
8	Explain the operation and flowpaths for normal cooldown, emergency injection and recirculation phases for the ND System. PSND008	X	X	X	X	X
9	Given a Limit and Precaution associated with the ND System, discuss its basis and when it applies. PSND009		X	X	X	X
10	Concerning AP/1or 2/A/5500/19; Loss of ND or ND System Leakage, explain the purpose of the AP PSND010			X	X	
11	Concerning the Technical Specifications related to the ND System: • Given the LCO title, state the LCO including the composition of an RHR loop listed in the LCO section of Bases (including any COLR values) and applicability. • For any LCO's that have action required within one hour, state the action. • Given a set of parameter values or system conditions, determine if any Tech Spec LCO's is(are) not met and any action(s) required within one hour. • Given a set of parameter values or system conditions and the appropriate Tech Spec, determine required action(s). • Discuss the bases for a given Tech. Spec. LCO or Safety Limit. *** SRO ONLY** PSND011			X X X X	X X X X	X X X *

3.2.4 Cold Leg Recirc Mode

The FWST Lo Level setpoint will automatically open NI-185A and NI-184B to align the ND suction to the Containment sump. When NI-185A and NI-184B reach their full open position, ND-19A and ND-4B will close. Manual swapover must be performed on FWST LO level if auto swapover fails. Once the ND suction has been aligned to the containment sump, the system will be in the cold leg recirc alignment. **It is time critical for the operator to perform the following actions:**

- **Select close on FW-27A by 195 seconds after FWST Lo level alarm.**
- **Select open on ND-58A and NI-136B by 355 seconds after FWST Lo level alarm.**

These time critical action times are based on having 2 trains in service and FWST depletion rate. The NV pumps and NI pumps suctions will be manually connected to the ND system by opening ND-58A (Train A ND to NV & NI Pumps) and NI-136B (B NI Pump Suction from ND). Prior to swapping to the containment sump, the NI and NV pumps were also aligned to the FWST. However, the NV and NI pump's NPSH do not allow them to operate from the containment sump. Therefore the ND pumps are used to supply their suctions. One train of ND has the capacity to supply all four NV and NI pumps while in cold leg recirc. **The purpose of ND during ECCS recirculation is to:**

- **Inject water into the NCS if NCS pressure is less than ND pump shutoff head.**
- **Provide suction supply to NV and NI pumps**
- **Also may be used as containment spray (through NS-38B or NS-43A).**

The flow path for cold leg recirc. is as follows: (refer to Drawing 7.6)

- **the ND system takes a suction on the containment sump through NI-184B and NI-185A to the ND pumps**
- **from the ND pumps through the ND heat exchangers**
- **from the ND heat exchangers, the flow splits to: (1) through ND-58A to the NV pumps' suctions, (2) through NI-136B to the NI pumps' suctions, (3) if needed, to the containment auxiliary spray header ring through NS-43A or NS-38B. (To establish spray flow, the associated NI-173 or NI-178 must be closed to ensure sufficient head to establish spray flow) and (4) to ND-29 and ND-14**
- **from ND-29 and ND-14 through NI-173A and NI-178B to the NCS cold legs.**

The ND system will remain in this alignment until removed by procedure due to no longer being needed or aligned for hot leg recirc. For more information on the cold leg recirc alignment refer to EP/1 or 2/A/5000/ES-1.3 (Transfer to Cold Leg Recirc).

1 Pt. Which one of the following will cause annunciator alarm 1AD3-A5, Main Steam Isolation VLV Closed, to come into alarm?

A. **2# per second rate of steam pressure decrease with NC pressure at 2000 psig.**

B. **1/3 steam pressure detectors at 760 psig on 2/4 steam generators with NC pressure at 2000 psig.**

C. **Containment pressure 1.2 psig.**

D. **1SM 5 (S/G 1B Main Steam Isolation Valve) ~~is~~ closed ~~using the individual pushbutton.~~**

Is "D" implied fully closed. what % closed gives alarm?
what if @ high Power?

Bank Question: 1107 **Answer: D**

1 Pt. Which one of the following will cause annunciator alarm 1AD3-A5, Main Steam Isolation VLV Closed, to come into alarm?

A. 2# per second rate of steam pressure decrease with NC pressure at 2000 psig.

B. 1/3 steam pressure detectors at 760 psig on 2/4 steam generators with NC pressure at 2000 psig.

C. Containment pressure 1.2 psig.

D. 1SM 5 (S/G 1B Main Steam Isolation Valve) is closed using the individual pushbutton.

Distracter Analysis: A steamline rupture potentially will cause a main steamline isolation on low steam pressure, high rate of decrease, or high high containment pressure. This question is testing if the student knows the setpoints and logic for automatic main steam isolation.

A. **Incorrect**: correct less than 1955 psig
Plausible:

B. **Incorrect**: 2/3 on ¼ steam generators
Plausible:

C. **Incorrect**: pressure > 3# in containment
Plausible:

D. **Correct**
Plausible:

LEVEL: RO & SRO

KA: W/E12 G2.4.46 (3.5/3.6)

SOURCE: NEW

LEVEL OF KNOWLEDGE: Comprehension

AUTHOR: CWS

LESSON: OP-MC-ECC-ISE

OBJECTIVES: OP-MC-ECC-ISE Obj. 5

REFERENCES: OP-MC-ECC-ISR pages 17 and 31
OP/010D A5 page 8

2.4 Emergency Procedures /Plan (Continued)

2.4.44 **Knowledge of emergency plan protective action recommendations.**
(CFR: 43.5 / 45.11)
IMPORTANCE RO 2.1 SRO 4.0

2.4.45 **Ability to prioritize and interpret the significance of each annunciator or alarm.**
(CFR: 43.5 / 45.3 / 45.12)
IMPORTANCE RO 3.3 SRO 3.6

2.4.46 **Ability to verify that the alarms are consistent with the plant conditions.**
(CFR: 43.5 / 45.3 / 45.12)
IMPORTANCE RO 3.5 SRO 3.6

2.4.47 **Ability to diagnose and recognize trends in an accurate and timely manner utilizing the appropriate control room reference material.**
(CFR: 41.10,43.5 / 45.12)
IMPORTANCE RO 3.4 SRO 3.7

2.4.48 **Ability to interpret control room indications to verify the status and operation of system, and understand how operator actions and directives affect plant and system conditions.**
(CFR: 43.5 / 45.12)
IMPORTANCE RO 3.5 SRO 3.8

2.4.49 **Ability to perform without reference to procedures those actions that require immediate operation of system components and controls.**
(CFR: 41.10 / 43.2 / 45.6)
IMPORTANCE RO 4.0 SRO 4.0

2.4.50 **Ability to verify system alarm setpoints and operate controls identified in the alarm response manual.**
(CFR: 45.3)
IMPORTANCE RO 3.3 SRO 3.3

CLASSROOM TIME (Hours)

NLO	NLOR	LPRO	LPSO	LOR
2.5	1.5	1.5	1.5	1.5

OBJECTIVES

	OBJECTIVE	NLO	NLOR	LPRO	LPSO	LOR
1	State the purpose of the Engineered Safeguards System.	X	X	X	X	
2	Explain the need and reasoning behind the redundancy requirements for two trains of safety related systems.	X	X	X	X	
3	State how the operator would be aware if more than one protection cabinet door was opened simultaneously.		X	X	X	X
4	Define the following terms: S_s, S_t, S_P, S_H	X		X	X	
5	List the conditions that will initiate the following: • Safety Injection (S_s) • Phase "A" Isolation (S_t) • Containment Spray/Phase "B" Isolation (S_P) • Containment Ventilation Isolation (S_H) • Main Steam Isolation (MSI) • Main Feedwater Isolation (FWI) • VE (Annulus Ventilation) System Start • H_2 Skimmer and Air Return Fan Start (VX)	X				
6	List all Safety Injection (S_s) actuation signals, setpoints, logic, and the type of accident each signal provides protection for.		X	X	X	X
7	List the pumps that automatically start following a safety injection actuation.		X	X	X	X
8	State which Safety Injection (S_s) signal can be blocked.	X	X	X	X	X
9	Explain the reason for blocking a Safety Injection (S_s) signal.	X	X	X	X	X
10	List the interlock and parameter setpoint that allows blocking Safety Injection (S_s).		X	X	X	X
11	Describe the operator action needed to block Safety Injection.		X	X	X	X
12	List the conditions that allow RESET of Safety Injection.		X	X	X	X

Objective # 5

Containment Ventilation Isolation (S_H)

- Safety Injection (S_S)
- Manual Phase "A" (S_t)
- Manual Phase "B"
- Trip 2 on EMF-38, 39, or 40

Main Steam Isolation (MSI)

- Hi Hi Containment Pressure (S_p)
- Low Steamline Pressure
- High Steamline Pressure rate of decrease (below P-11 with Lo Press Stm Line Isol blocked)
- Manual

Main Feedwater Isolation (FWI)

- Safety Injection (S_S)
- Reactor Trip and Low T-avg
- High High S/G Level
- Manual

VE (Annulus Ventilation) System Start

- Hi Hi Containment Pressure (S_p)
- Manual

H_2 Skimmer and Air Return Fan Start (VX)

- Hi Hi Containment Pressure (S_p)
- CPCS
- 10 minute time delay

Objective # 13

A Main Steam Isolation (MSI) signal closes the MSIV's, MSIV bypasses and the PORV's. It can be actuated by any one of the following signals:

Manually		**$^1/_2$ pushbuttons**	
Hi Hi Containment Pressure	**> 3.0 psig**	**$^2/_4$ channels**	
Low Steam Pressure	**< 775 psig**	**$^2/_3$ channels on $^1/_4$ S/G**	**> P-11**
High steamline pressure negative rate	**(-)100 psig/sec**	**$^2/_3$ channels on $^1/_4$ S/G**	**below P-11 if the Lo Press Stm Line Isol is blocked**

If a lower SM depressurization rate is maintained over time, eventually the Main Steam Isolation (MSI) can occur. The 100 psi/sec rate is somewhat of a misnomer. If SM press drops 100 psi in 1 sec, you will get an isolation, but lower rates can also give you an isolation. Here are some examples that will result in a Main Steam Isolation (MSI):

- 100 psi/sec for 1 sec
- 25 psi/sec for approximately 4 seconds
- 8.7 psi/sec for approximately 13 seconds
- 4.3 psi/sec for approximately 30 seconds
- 2.2 psi/sec for approximately 120 seconds
- 2.0 psi/sec for approximately 360 seconds

A steady state Main Steam depressurization rate of less than 2 psi/sec should not result in a Main Steam Isolation (MSI).

NOTE: **Some emergency procedures require controlled depressurization of one or more S/G's. The rate of depressurization (psi/sec) can be monitored on the OAC by selecting an individual affected S/G. Use of this information allows the operator to depressurize at a maximum rate while avoiding a Main Steam Isolation.**

Main Steam Isolation (MSI) may be reset if initiating signal is cleared or blocked (The Hi Hi Containment pressure is the one initiating signal that can still exist and allow us to reset.) There are two pushbuttons, one for each train.

MSI (Main Steam Isolation) "Reset" permits MSIV operation, allows PORV "Reset" and allows MSIV Bypass "Reset".

NOTE: **In order to operate the PORV's or the MSIV bypasses, the MSIV "Resets" must be depressed and then the PORV "Resets" or MSIV Bypass "Resets" must be depressed.**

Nomenclature: **MAIN STEAM ISOLATION VLV CLOSED** Window: **A5**

Setpoint: Any of the four main steamline isolation valves closed.

Origin: Contact located on valve.

Probable Cause:
- High negative steamline pressure rate below P-11 (1955 PSIG)
- Low steamline pressure above P-11 (1955 PSIG)
- Hi-Hi Containment Pressure
- Manual steamline isolation

Automatic Action: None

Immediate Action:
1. Ensure reactor tripped. {PIP 99-3102}
2. Stabilize plant conditions.
3. Perform actions required per appropriate Emergency Procedures.

Supplementary Action:
1. Attempt to open Main Steam Isolation Bypass Valve to equalize pressure across Main Steam Isolation Valve.
2. **WHEN** pressure is equalized across Main Steam Isolation Valve, attempt to open the Main Steam Isolation Valve.

References:
- McGuire FSAR.
- MCM-1205.12-1
- NSM MG-12126

End Of Response

Unit 1

Recuse

1 Pt(s) The immediate action steps of AP/1/A/5500/14 (Control Rod Malfunctions) require operator actions associated with rod control.

Which one of the following describes why these actions are required rather than simply allowing the reactor control system to respond in automatic to recover power?

A. **If the reactor is operating at or near 100% powers, automatic rod withdrawal will cause the power mismatch signal to over-compensate and generate a rod stop.**

B. **Allowing automatic rod withdrawal will increase the severity of flux tilt and the core will be closer to DNBR limits.**

C. **Allowing the rod control system to respond automatically causes a reduction in shutdown margin**

D. **If the control bank is close to the top of the core, the rods will drive out until they reach the full out position. This action could cause the RCC drive shaft to jam against the mechanical stop causing the rods to become stuck when temperature changes cause thermal expansion of the RCC.**

---

what kind of CR malfunction? Dropped Rod Stuck Rod

Bases Question: what the to

should be avoided

To prevent approaching or exceeding DNBR Limits

To prevent exceeding SD MARGIN Requirements

etc.

Bank Question: 1108 **Answer: B**

1 Pt(s) The immediate action steps of AP/1/A/5500/14 (Control Rod Malfunctions) require operator actions associated with rod control.

Which one of the following describes why these actions are required rather than simply allowing the reactor control system to respond in automatic to recover power?

A. If the reactor is operating at or near 100% powers, automatic rod withdrawal will cause the power mismatch signal to over-compensate and generate a rod stop.

B. Allowing automatic rod withdrawal will increase the severity of flux tilt and the core will be closer to DNBR limits.

C. Allowing the rod control system to respond automatically causes a reduction in shutdown margin

D. If the control bank is close to the top of the core, the rods will drive out until they reach the full out position. This action could cause the RCC drive shaft to jam against the mechanical stop causing the rods to become stuck when temperature changes cause thermal expansion of the RCC.

Distracter Analysis:

A. Incorrect:
Plausible:
B. Correct:
C. Incorrect:
Plausible:
D. Incorrect
Plausible:

LEVEL: RO & SRO

KA: APE 000001 G2.1.10 (2.7/3.9)

SOURCE: BANK McGuire NRC Exam 1997

LEVEL OF KNOWLEDGE: Comprehension

AUTHOR:

LESSON: AP-14 Background Document

OBJECTIVES: OP-MC-AP-14 Obj. 3

REFERENCES: AP/14 Background Document pages 3 and 4
AP/14 page 3

2.1 Conduct of Operations (continued)

2.1.9 **Ability to direct personnel activities inside the control room.**
(CFR: 45.5 / 45.12 / 45.13)
IMPORTANCE RO 2.5 SRO 4.0

2.1.10 **Knowledge of conditions and limitations in the facility license.**
(CFR: 43.1 / 45.13)
IMPORTANCE RO 2.7 SRO 3.9

2.1.11 **Knowledge of less than one hour technical specification action statements for systems.**
(CFR: 43.2 / 45.13)
IMPORTANCE RO 3.0 SRO 3.8

2.1.12 **Ability to apply technical specifications for a system.**
(CFR: 43.2 / 43.5 / 45.3)
IMPORTANCE RO 2.9 SRO 4.0

2.1.13 **Knowledge of facility requirements for controlling vital / controlled access.**
(CFR: 41.10 / 43.5 / 45.9 / 45.10)
IMPORTANCE RO 2.0 SRO 2.9

2.1.14 **Knowledge of system status criteria which require the notification of plant personnel.**
(CFR: 43.5 / 45.12)
IMPORTANCE RO 2.5 SRO 3.3

2.1.15 **Ability to manage short-term information such as night and standing orders.**
(CFR: 45.12)
IMPORTANCE RO 2.3 SRO 3.0

2.1.16 **Ability to operate plant phone, paging system, and two-way radio.**
(CFR: 41.10 / 45.12)
IMPORTANCE RO 2.9 SRO 2.8

2.1.17 **Ability to make accurate, clear and concise verbal reports.**
(CFR: 45.12 / 45.13)
IMPORTANCE RO 3.5 SRO 3.6

CLASSROOM TIME (Hours)

NLO	NLOR	LPRO	LPSO	LOR
		2	2	1

OBJECTIVES

	OBJECTIVE	NLO	NLOR	LPRO	LPSO	LOR
1	Explain the purpose for AP/14 Rod Control Malfunction). AP14001			X	X	X
2	Analyze the mitigating strategy (major actions) contained in the procedure. AP14002			X	X	X
3	Given scenarios describing accident events and plant conditions, evaluate the basis for any caution, note, or step. AP14003			X	X	X
4	Given scenarios describing accident events and plant conditions, evaluate conditions which require application of continuous action steps. AP14004			X	X	X

STEP DESCRIPTION FOR AP

STEP 1:

PURPOSE:

This step is a conditional step that diagnoses for the multiple dropped control rods and directs the operator to trip the reactor if more than 1 control rod has dropped.

DISCUSSION:

Multiple dropped rods don't necessarily result in power distribution limits being exceeded. Multiple dropped control rods are a significant reactivity transient that can have a serious effect on plant parameters under certain operating conditions. The guidance to trip the reactor is a conservative action to prevent the plant from challenging the Pzr low pressure trip setpoint, etc.; and is consistent with the conservative nature of the industry.

This step is consistent with the guidance given in response to industry event OEDB 90-002761 (SER 90-15). In that event, Vogtle1 dropped several rods during physics testing, and withdrew rods to get back critical. This resulted in bypassing the carefully controlled evolution of taking the reactor critical. The appropriate response should have been to trip the reactor or drive the other control rods to complete the shutdown. At McGuire, this step would have the operators trip for this type event. If only one rod were to drop, causing the reactor to go subcritical, Encl 1 would continue the shutdown.

The guidance to go to E-0 is given assuming the plant is not shutdown (above P-11) as per the direction given in OMP's concerning when E-0 is applicable.

REFERENCES:
OEDB 90-002761 (SER 90-15)
PIP 1-M-98-0644

STEP 2:

PURPOSE:

Rods are placed in manual to prevent conditions from getting worse. If the AP was entered due to a dropped or misaligned rod, going to manual will stop the auto control from driving rods further out while it attempts to compensate for the rod problem. If the AP was entered due to a reactor control system failure, going to manual will stop the auto control from inappropriately driving rods. If the AP was entered because of an Urgent Alarm condition on the rod control system, going to manual should stop demanded rod motion and prevent challenging the rod control system's ability to hang on to the rods.

DISCUSSION:

Control rods are placed in manual to stop any transient that may be generated as a result of a Reactor Control System input failure or dropped or misaligned control rod. Additional control rod movement beyond the identified failure serves to exaggerate any resulting transient from the initial rod movement.

Also, with control rods in automatic control, the potential exists for rod motion to be demanded without the problem being corrected and possibly result in a control rod drop event. The Rod Control system knows it's malfunctioning when it detects an Urgent Alarm condition. It attempts to mitigate the condition by ordering reduced currents to both the stationary and movable grippers in an attempt to hang on to what it has. Challenging this with attempted rod motion before the consequences have been evaluated should be avoided.

When control rods are maintained in manual control, any power and/or temperature mismatch can be corrected by changing turbine load or boration/dilution.
By placing control rods in manual, any flux tilt that has resulted from control rod movement will likely be less severe than with continued rod motion.
It is important to note that in the event of a runback, control rods are required to be placed in automatic. If a control rod misalignment problem occurs during the course of the runback, control rods should be left in automatic. Once the runback has been addressed through the guidance of AP/03, the control rod problem should be addressed. The load rejection or runback should have priority to the rod control failure.
It is very important to maintain an operator at the rod control station as long as control rods are in manual.

REFERENCES:

STEP 3:

PURPOSE:

This step ensures that control rod movement has stopped after rod control has been placed in manual and directs tripping the reactor if it hasn't.

DISCUSSION:

Uncontrolled control rod movement is a major reactivity management concern which could lead to power distribution problems, flux anomalies and significantly impact other plant parameters if not immediately addressed. Failures in the automatic circuit of rod control should be defeated when control rods are placed in manual. If control rods continue to move in manual, the operator has no control, and the reactor is tripped.

ACTION/EXPECTED RESPONSE	RESPONSE NOT OBTAINED

C. Operator Actions

1. **IF more than one rod dropped, THEN:**

   __ a. Trip reactor.

   __ b. GO TO EP/1/A/5000/E-0 (Reactor Trip or Safety Injection).

2. **Place control rods in manual.**

3. **Check rod movement - STOPPED.**

   IF rod movement continues, THEN perform the following:

   __ a. Trip reactor.

   __ b. GO TO EP/1/A/5000/E-0 (Reactor Trip or Safety Injection).

Bank Question: 108 Answer: B

1 Pt(s) The immediate action steps of AP/1/A/5500/14 Case III (Dropped Control Rod) require operator actions associated with rod control and temperature restoration. Why are these actions required rather than simply allowing the reactor control system to respond in automatic to recover power?

A. **If the reactor is operating at or near 100% power, automatic rod withdrawal will cause the power mismatch signal to over-compensate and a generate a rod stop.**

B. **Allowing automatic rod withdrawal will increase the severity of flux tilt and the core will be closer to DNBR limits.**

C. **Allowing the rod control system to respond automatically causes a reduction in shutdown margin**

D. **If the control bank is close to the top of the core, the rods will drive out until they reach the full out position. This action could cause the RCC drive shaft to jam against the mechanical stop causing the rods to become stuck when temperature changes cause thermal expansion of the RCC.**

MISCINFO: RO ONLY **SOURCE:** RO96

REFERENCES: OP-MC-IC-IRE page 35

LESSON: OP-MC-IC-IRE **TASK:**

OBJECTIVE:LPRO 16 **TIME:**

K/A:000003EK103(3.5/3.8) **DATE:** 4/7/97

1 Pt.

Unit 1 is operating a 100% power when rod M14 drops fully into the core causing Power Range N41 to read lower than the other power range channels.

Which one of the following is the expected QPTR response over the next several hours and why?

A. QPTR will increase due to the buildup of Xenon in the dropped rod fuel assembly.

B. QPTR will decrease due to the build up Xenon in the dropped rod fuel assembly.

C. QPTR will increase due to the decreased temperature in the dropped rod fuel assembly.

D. QPTR will decrease due to the increased temperature in the dropped fuel rod assembly.

Bank Question: 1109 **Answer: A**

1 Pt. Unit 1 is operating a 100% power when rod M14 drops fully into the core causing Power Range N41 to read lower than the other power range channels.

Which one of the following is the expected QPTR response over the next several hours and why?

A. QPTR will increase due to the buildup of Xenon in the dropped rod fuel assembly.

B. QPTR will decrease due to the build up Xenon in the dropped rod fuel assembly.

C. QPTR will increase due to the decreased temperature in the dropped rod fuel assembly.

D. QPTR will decrease due to the increased temperature in the dropped fuel rod assembly.

Distracter Analysis:.

A. **Correct**:
B. **Incorrect**: QPTR will increase as Xe builds up in the dropped rod fuel assembly.
Plausible:
C. **Incorrect**: QPTR will decrease due to decreased temp.
Plausible:
D. **Incorrect** QPTR will decrease due to decreased temp
Plausible:

LEVEL: RO & SRO

KA: 00003 AK1.11 (2.5/3.5)

SOURCE: NEW

LEVEL OF KNOWLEDGE: Analysis

AUTHOR: CWS

LESSON: OP-MC-AP-14

OBJECTIVES: OP-MC-AP-14, obj 3

REFERENCES: AP/14 Background Document, pg 18

APE: 003 Dropped Control Rod

K/A NO.	KNOWLEDGE	IMPORTANCE RO	SRO
AK1.	**Knowledge of the operational implications of the following concepts as they apply to Dropped Control Rod: (CFR 41.8 / 41.10 / 45.3)**		
AK1.01	Reason for turbine following reactor on dropped rod event	3.2	3.7
AK1.02	Effects of turbine-reactor power mismatch on rod control	3.1	3.4
AK1.03	Relationship of reactivity and reactor power to rod movement	3.5	3.8
AK1.04	Effects of power level and control position on flux	3.1	3.7
AK1.05	CVCS response to dropped rod	2.3*	2.6*
AK1.06	Control rod motion on S/G pressure	2.3	2.7
AK1.07	Effect of dropped rod on insertion limits and SDM	3.1	3.9
AK1.08	Reason for use of pulse/analog converter (determination of actual rod positions)	2.1*	2.5*
AK1.09	Definition of T-ave., T-ref., °F, linear scale, % megawatts, reactor power, Kw/ft, pcm, Δk/k, rate, % of level	2.3	2.6
AK1.10	Definitions of core quadrant power tilt	2.6	2.9
AK1.11	Long-range effects of core quadrant power tilt	2.5	3.5
AK1.12	Units of measure for power range indication	2.3*	2.5*
AK1.13	Interaction of ICS control stations as well as purpose, function, and modes of operation of ICS	3.2*	3.6
AK1.14	Theory of operation of rod drive motors	1.5	1.8
AK1.15	Definition and application of power defect	2.8	3.0
AK1.16	MTC	2.9	3.2
AK1.17	Fuel temperature coefficient	2.9	3.1
AK1.18	Voids coefficient	2.1	2.2
AK1.19	Differential rod worth	2.8	2.9
AK1.20	Integral rod worth	2.6	2.7
AK1.21	Delta flux (ΔI)	2.7	3.2
AK1.22	Calculation of power defect: algebraic sum of moderator temperature and fuel temperature defects	2.5	2.6
AK2.	**Knowledge of the interrelations between the Dropped Control Rod and the following: (CFR 41.7 / 45.7)**		
AK2.01	Controllers and positioners	2.1	2.1
AK2.02	Breakers, relays, and disconnects	2.1	2.2
AK2.03	Metroscope	3.1*	3.2*
AK2.04	Sensors and detectors	2.4	2.4
AK2.05	Control rod drive power supplies and logic circuits	2.5	2.8

CLASSROOM TIME (Hours)

NLO	NLOR	LPRO	LPSO	LOR
		2	2	1

OBJECTIVES

	OBJECTIVE	NLO	NLOR	LPRO	LPSO	LOR
1	Explain the purpose for AP/14 Rod Control Malfunction). AP14001			X	X	X
2	Analyze the mitigating strategy (major actions) contained in the procedure. AP14002			X	X	X
3	Given scenarios describing accident events and plant conditions, evaluate the basis for any caution, note, or step. AP14003			X	X	X
4	Given scenarios describing accident events and plant conditions, evaluate conditions which require application of continuous action steps. AP14004			X	X	X

Encl. 1 - STEP 11:

PURPOSE:

This step is a conditional step based on when the dropped control rod will be withdrawn and if a unit load reduction will be necessary to comply with Tech Specs.

DISCUSSION:

For most cases, the conditioned power level will be 100% full power and retrieval of the dropped control rod will be possible without power reduction if performed within 2 hours. When a control rod has been dropped for greater than 2 hours, significant xenon redistribution can occur which causes linear heat rates high enough to cause possible pellet clad interactions (PCI). PCI may result in fuel reliability problems. The longer the control rod remains in the core, the worse the xenon distribution becomes and upon recovery may continue to affect that control rod.
Operations is allowed to choose between the controlling procedure for unit operation or the rapid downpower AP to reduce unit load to Tech Spec required levels.
The reduction of power to < 75% rated thermal power ensures that local linear heat increases due to the dropped control rod will not exceed design criteria. The 2 hour time limit provides operations sufficient time to perform a controlled power reduction and not challenge the reactor protection system.
Power will be further reduced to < 50% or conditioned power level, whichever is lower. Below 50% power, limits on AFD and QPTR are not required. Being below the conditioned power level should prevent exceeding any limits when withdrawing the dropped control rod.

AFD is monitored during the power reduction since AFD tends to go positive when leaving rods out during down power transients. If the Tech Spec limit is reached prior to 50% level, direction is given to trip the reactor since its reasonable to assume the AFD is only going to get worse before reaching 50% as power reduction is continued.

REFERENCES:

ITS 3.1.4

ACTION/EXPECTED RESPONSE	RESPONSE NOT OBTAINED

11. **IF AT ANY TIME it is determined that it will take longer than 2 hours to retrieve the dropped rod, THEN perform the following:**

__ a. Do not move rods until IAE determines rod movement is available.

__ b. Borate as required during power reduction to maintain T-Ave at T-Ref.

__ c. Monitor AFD during load reduction.

d. **IF AT ANY TIME** AFD reaches Tech Spec limit **AND** reactor power is greater than 50%, **THEN**:

__ 1) Trip Reactor.

__ 2) **GO TO** EP/1/A/5000/E-0 (Reactor Trip or Safety Injection).

e. **REFER TO** one of the following procedures to perform power reduction in next step:

__ • OP/1/A/6100/003 (Controlling Procedure For Unit Operation), Enclosure 4.2 (Power Reduction)

OR

__ • AP/1/A/5500/04 (Rapid Downpower).

__ f. Ensure power is reduced to less than 75% rated thermal power within 2 hours to comply with Tech Specs.

g. Continue load reduction until both of the following are met:

__ • Reactor power is less than 50%.

__ • Reactor power is less than conditioned power level.

1 Pt. Chemistry calls and reports that leakage from the Steam Generators is as follows:

- "A" Steam Generator leakage is .08 gpm
- "B" Steam Generator leakage is .07 gpm
- "C" Steam Generator leakage is .07 gpm
- "D" Steam Generator leakage is .06 gpm

Which one of the following (if any) Technical Specifications has been violated?

A. ~~None~~

B. Primary to secondary LEAKAGE through all steam generators (SGS)

C. Pressure boundary leakage

D. Primary to secondary LEAKAGE through any one SG.

Bank Question: 1110 ***Answer: B***

1 Pt. Chemistry calls and reports that leakage from the Steam Generators is as follows:

- "A" Steam Generator leakage is .08 gpm
- "B" Steam Generator leakage is .07 gpm
- "C" Steam Generator leakage is .07 gpm
- "D" Steam Generator leakage is .06 gpm

Which one of the following (if any) Technical Specifications has been violated?

ID

A. ~~**None**~~

B. **Primary to secondary LEAKAGE through all steam generators (SGS)**

C. **Pressure boundary leakage**

D. **Primary to secondary LEAKAGE through any one SG.**

Distracter Analysis:. The limit on leakage through all SGs is 389 gallons per day. The .28 gpm is just above that limit on a daily basis. This question depends on the candidate realizing that SG leakage is not pressure boundary leakage and knowing the limits for leakage. The leakage through "A" SG is less than the limit of 135 gallons per day.

A. **Incorrect**:
Plausible: The limit of 389 gallons per day through all SG is violated

B. **Correct**:

C. **Incorrect**:
Plausible: SG leakage is not pressure boundary leakage

D. **Incorrect**
Plausible: The .08 gpm through the "A" SG is less than 135 gallons per day.

LEVEL: RO & SRO

KA: 000037 AA2.10 3.2/4.1

SOURCE: NEW

LEVEL OF KNOWLEDGE: Comprehensive

AUTHOR: CWS

LESSON: OP-MC-STM-SG

OBJECTIVES: OP-MC-STM-SG Obj. 6

REFERENCES: Tech Spec 3.4.13

APE:	**037 Steam Generator (S/G) Tube Leak**		
AA1.	**Ability to operate and / or monitor the following as they apply to the Steam Generator Tube Leak: (CFR 41.7 / 45.5 / 45.6)**		
AA1.01	Maximum controlled depressurization rate for affected S/G	3.7	3.6
AA1.02	Condensate exhaust system	3.1*	2.9
AA1.03	Loop isolation valves	3.0*	2.9
AA1.04	Condensate air ejector exhaust radiation monitor and failure indicator	3.6	3.9
AA1.05	Radiation monitor for auxiliary building exhaust processes	3.3	3.5
AA1.06	Main steam line rad monitor meters	3.8*	3.9*
AA1.07	CVCS letdown flow indicator	3.1	3.2
AA1.08	Charging flow indicator	3.3	3.1
AA1.09	RCS loop pressure indicators	3.3	3.2
AA1.10	CVCS makeup tank level indicator	2.9	3.1
AA1.11	PZR level indicator	3.4	3.3
AA1.12	Control panel power range channel recorders	2.3*	2.5*
AA1.13	S/G blowdown radiation monitors	3.9	4.0
AA2.	**Ability to determine and interpret the following as they apply to the Steam Generator Tube Leak: (CFR: 43.5 / 45.13)**		
AA2.01	Unusual readings of the monitors; steps needed to verify readings	3.0	3.4
AA2.02	Agreement/disagreement among redundant radiation monitors	3.4	3.9
AA2.03	That the expected indication on main steam lines from the S/Gs should show increasing radiation levels	3.4	3.9
AA2.04	Comparison of RCS fluid inputs and outputs, to detect leaks	3.4	3.7
AA2.05	Past history of leakage with current problem	2.8	3.3
AA2.06	S/G tube failure	4.3	4.5
AA2.07	Flowpath for dilution of ejector exhaust air	3.1	3.6
AA2.08	Failure of Condensate air ejector exhaust monitor	2.8	3.3
AA2.09	System status, using independent readings from redundant Condensate air ejector exhaust monitor	2.8*	3.4*
AA2.10	Tech-Spec limits for RCS leakage	3.2	4.1
AA2.11	When to isolate one or more S/Gs	3.8	3.8*
AA2.12	Flow rate of leak	3.3	4.1
AA2.13	Which S/G is leaking	4.1	4.3
AA2.14	Actions to be taken if S/G goes solid and water enters steam lines	4.0	4.4
AA2.15	Magnitude of atmospheric radioactive release if cool-down must be completed using steam dump or atmospheric reliefs	3.4*	4.2
AA2.16	Pressure at which to maintain RCS during S/G cooldown	4.1	4.3

OBJECTIVES

	OBJECTIVE	NLO	NLOR	LPRO	LPSO	LOR
6.	Concerning the Technical Specifications related to the Steam Generators;					
	• Given the LCO title, state the LCO (including any COLR values) and applicability.			X	X	X
	• For any LCO's that have action required within one hour, state the action.			X	X	X
	• Given a set of parameter values or system conditions, determine if any Tech Spec LCO's is(are) not met and any action(s) required within one hour.			X	X	X
	• Given a set of plant parameters or system conditions and the appropriate Tech Specs, determine required action(s).			X	X	X
	• Discuss the basis for a given Tech Spec LCO or Safety Limit.				X	*
	* SRO Only					
7.	Concerning the Selected Licensee Commitments (SLC) related to the Steam Generators;					
	• For any commitments that have action required within one hour, state the action.			X	X	X
	• Given a set of parameter values or system conditions, determine if any commitments is(are) not met and any action(s) required within one hour.			X	X	X
	• Given a set of parameter values or system conditions and the SLC Manual, determine required action(s).			X	X	X
	• Given the SLC Manual, discuss the basis for a given commitment.				X	*
	* SRO Only					

3.4 REACTOR COOLANT SYSTEM (RCS)

3.4.13 RCS Operational LEAKAGE

LCO 3.4.13 RCS operational LEAKAGE shall be limited to:

a. No pressure boundary LEAKAGE;

b. 1 gpm unidentified LEAKAGE;

c. 10 gpm identified LEAKAGE;

d. 389 gallons per day total primary to secondary LEAKAGE through all steam generators (SGs); and

e. 135 gallons per day primary to secondary LEAKAGE through any one SG.

APPLICABILITY: MODES 1, 2, 3, and 4.

ACTIONS

CONDITION	REQUIRED ACTION	COMPLETION TIME
A. RCS LEAKAGE not within limits for reasons other than pressure boundary LEAKAGE.	A.1 Reduce LEAKAGE to within limits.	4 hours
B. Required Action and associated Completion Time of Condition A not met. OR Pressure boundary LEAKAGE exists.	B.1 Be in MODE 3. AND B.2 Be in MODE 5.	6 hours 36 hours

SURVEILLANCE REQUIREMENTS

SURVEILLANCE		FREQUENCY
SR 3.4.13.1	----------NOTE---------- Not required to be performed in MODE 3 or 4 until 12 hours of steady state operation. ---------- Verify RCS Operational LEAKAGE is within limits by performance of RCS water inventory balance.	--------NOTE------- Only required to be performed during steady state operation ---------- 72 hours
SR 3.4.13.2	Verify steam generator tube integrity is in accordance with the Steam Generator Tube Surveillance Program.	In accordance with the Steam Generator Tube Surveillance Program

1 Pt. Given the following conditions:

- Waste Gas Decay Tank 'A' is being released
- EMF 50 (L) Waste Gas Discharge is not detecting release activity

Which one of the following would be the result of the release if the tank discharge exceeded Trip 2 expected levels?

A. Release will continue as an unmonitored release

B. 1EMF 36(L) (Unit 1 Unit Vent Gas) Trip 2 will secure the release

C. 2EMF 36(L) (Unit 2 Unit Vent Gas) Trip 2 will secure the release

D. Release ~~would be~~ is unmonitored, manual termination required

---

This is not an accidental Release

Bank Question: 1111 **Answer: B**

1 Pt. Given the following conditions:

- Waste Gas Decay Tank 'A' is being released
- EMF 50 (L) Waste Gas Discharge is not detecting release activity

Which one of the following would be the result of the release if the tank exceeded Trip 2 expected levels?

A. Release will continue as an unmonitored release

B. 1EMF 36(L) (Unit 1 Unit Vent Gas) Trip 2 will secure the release

C. 2EMF 36(L) (Unit 2 Unit Vent Gas) Trip 2 will secure the release

D. Release monitored, manual termination required

Distracter Analysis:. 1EMF 36 will also monitor the release. With EMF 50 not working properly EMF 36 will secure the release.

A. Incorrect:
Plausible:
B. Correct:
Plausible:
C. Incorrect:
Plausible:
D. Incorrect
Plausible:

NEED Accidental release Scenario

LEVEL: RO & SRO

KA: 000060 AK2.01 (2.6/2.9)

SOURCE: NEW

LEVEL OF KNOWLEDGE: Memory

AUTHOR: CWS

LESSON: OP-MC-WE-WG

OBJECTIVES: OP-MC-WE-WG Obj. 5

REFERENCES: OP-MC-WE-WG page 29

APE: 060 Accidental Gaseous Radwaste Release

K/A NO.	KNOWLEDGE	IMPORTANCE RO	SRO
AK1.	**Knowledge of the operational implications of the following concepts as they apply to Accidental Gaseous Radwaste Release: (CFR 41.8 / 41.10 / 45.3)**		
AK1.01	Types of radiation, their units of intensity and the location of sources of radiation in a nuclear reactor power plant	2.5	3.1*
AK1.02	Biological effects on humans of the various types of radiation, exposure levels that are acceptable for personnel in a nuclear reactor power plant; the units used for radiation intensity measurements and for radiation exposure levels	2.5	3.1*
AK1.03	Theory of radiation detection and intensity measurement by the use of ionization chambers and scintillation type radiation detectors	2.1	2.5*
AK1.04	Calculation of offsite doses due to a release from the power plant	2.5*	3.7*
AK2.	**Knowledge of the interrelations between the Accidental Gaseous Radwaste Release and the following: (CFR 41.7 / 45.7)**		
AK2.01	ARM system, including the normal radiation-level indications and the operability status	2.6	2.9*
AK2.02	Auxiliary building ventilation system	2.7	3.1
AK2.03	Valves	2.1	2.1
AK2.04	Sensors, detectors, and indicators	1.9	1.9
AK3.	**Knowledge of the reasons for the following responses as they apply to the Accidental Gaseous Radwaste: (CFR 41.5,41.10 / 45.6 / 45.13)**		
AK3.01	Implementation of E-plan	2.9	4.2
AK3.02	Isolation of the auxiliary building ventilation	3.3*	3.5*
AK3.03	Actions contained in EOP for accidental gaseous-waste release	3.8	4.2
AK3.04	Startup of the gas treatment system	2.2*	2.7*

CLASSROOM TIME (Hours)

NLO	NLOR	LPRO	LPSO	LOR
2.0	2.0	2.0	2.0	2.0

OBJECTIVES

	OBJECTIVE	NLO	NLOR	LPRO	LPSO	LOR
1	State the purpose of the Waste Gas (WG) System. WEWG001	X	X	X	X	X
2	Describe the system flowpath during normal operation, shutdown operation and waste gas discharge. WEWG002	X	X	X	X	X
3	List four components that discharge waste gas into the WG Header. WEWG003	X	X	X	X	X
4	List two types of non-radioactive waste gas discharged into the WG Header. WEWG004	X	X	X	X	X
5	List the WG Discharge Flow Controller (WG-160) trips. WEWG005	X	X	X	X	X
6	Concerning the Selected Licensee Commitments (SLC) related to the WG System: • Discuss any commitments and their applicability. • For any commitments that have action required within one hour, state the action. • Given a set of parameter values or system conditions, determine if any commitment is (are) not met and any action(s) required within one hour. • Discuss the basis for a given commitment. *** SRO only** WEWG007			X X X	X X X X	X X X *

Objective #5

1WG160, Waste Gas Discharge Flow Controller trips closed when:

- Unit vent gas 1EMF36(L) (Unit 1 only) trip two setpoint is reached.
- Waste gas 1EMF50(L) trip two setpoint is reached.

Waste Gas Radiation Monitor (2 channels) and Plant Vent Radiation Monitor are indicated on the Waste Gas Processing Panel.

Alarms

The following annunciators alarm on the Waste Gas Panel.

- Gas Tank Pressure High (One for each of 8 tanks).
- Waste Gas Moisture Separator Level High-Low (2).
- Waste Gas Monitor Radiation High.
- Plant Vent Monitor Radiation High.
- Waste Gas Moisture Separator High Pressure (2).
- Waste Gas Moisture Separator Low Pressure (2).
- Waste Gas Compressor Suction Pressure Low.
- Recombiner No. 1 Alarm.
- Recombiner No. 2 Alarm.
- N_2 Header Supply Pressure Low.
- Primary Makeup Water to Gas Decay Tanks High Volume.
- H_2 Header Supply Pressure Low.
- H_2 Recombiner HX KC Outlet Flow Low (2).
- Waste Gas Compressor HX KC Flow Low (2).

Any of these alarms will actuate the Waste Gas Panel Trouble Annunciator in the Control Room

3.2. Abnormal and Emergency Operation

None

1 Pt. Which one of the following conditions allows for the use of EP/1/A/5000/ES-0.0 Rediagnosis?

A. **Safety Injection Signal and**
EP/1/A/5000/E-0 (Reactor Trip or Safety Injection) completed

B. **No Safety Injection Signal and**
EP/1/A/5000/ES-0.1 (Reactor Trip Response) completed

C. **Safety Injection Signal and**
EP/1/A/5000/ECA-0.0 (Loss of all AC Power) implemented

D. **No Safety Injection Signal and**
EP/1/A/5000/ECA-0.0 (Loss of all AC Power) implemented

Bank Question: 1112 **Answer: A**

1 Pt. Which one of the following conditions allows for the use of EP/1/A/5000/ES-0.0 Rediagnosis?

A. **Safety Injection Signal and**
EP/1/A/5000/E-0 (Reactor Trip or Safety Injection) completed

B. ~~**No Safety Injection Signal and**~~ MSL Break outside containment, MSIVS closed and
EP/1/A/5000/ES-0.1 (Reactor Trip Response) completed

C. **Safety Injection Signal and**
EP/1/A/5000/ECA-0.0 (Loss of all AC Power) implemented

D. ~~**No Safety Injection Signal and**~~ MSL Break outside containment, MSIVS closed and
EP/1/A/5000/ECA-0.0 (Loss of all AC Power) implemented

Distracter Analysis:. Step 1 of Rediagnosis states S/I signal has actuated, and E-0 has been completed.

A. **Correct**:
B. **Incorrect**: SI required
Plausible:
C. **Incorrect**: Rediagnosis not dependent on ECA-0.0
Plausible:
D. **Incorrect**
Plausible:

LEVEL: RO & SRO

KA: W/E01 EK3.2 (3.0/3.9)

SOURCE: NEW

LEVEL OF KNOWLEDGE: Memory

AUTHOR: CWS

LESSON: EP-MC-EP-E0

OBJECTIVES: OP-MC-EP-E0 Obj. 2

REFERENCES: OP-MC-EP-E0 page 81
EP/ES0.0 page 2

CLASSROOM TIME (Hours)

NLO	NLOR	LPRO	LPSO	LOR
N/A	N/A	2.0	2.0	1.0

OBJECTIVES

SEQ	OBJECTIVE	NLO	NLOR	LPRO	LPSO	LOR
1	Describe the accidents that are diagnosed in E-0 and the diagnostic sequence. EPE0001			X	X	X
2	Explain the purpose for each procedure in the E-0 series. EPE0002			X	X	
3	Discuss the entry and exit guidance for each procedure in the E-0 series. EPE0003			X	X	
4	Discuss the symptoms of a reactor trip and/or safety injection. EPE0004			X	X	
5	Discuss the mitigating strategy (major actions) of each procedure in the E-0 series. EPE0005			X	X	X
6	Discuss the basis for any note, caution or step for each procedure in the E-0 series. EPE0006			X	X	X
7	Describe the immediate actions and include the RNO when appropriate. EPE0007			X	X	X
8	Describe the actions included on the E-0 Foldout page and the basis for these actions. EPE0008			X	X	X
9	Given the Foldout page, other than E-0, discuss the actions included and the basis for these actions. EPE0009			X	X	X

4.0 ES-0.0, REDIAGNOSIS

4.1. Purpose

ES-0.0 provides a mechanism to allow the operator to determine or confirm the most appropriate post accident recovery procedure.

The operator, at his discretion, may use ES-0.0 at any time when S/I has been actuated and E-0 has been completed. The most likely case will be if the operator thinks he is in the wrong procedure. He will use ES-0.0 to either confirm he is in the appropriate procedure series or as a means to transition to the appropriate guideline.

ES-0.0 is entered based on operator judgment and is exited after the operator confirms that he is in the appropriate procedure series or is directed to the appropriate procedure.

If ES-0.0 identifies that the operator is not in the appropriate procedure, then he should transition to Step 1 of the appropriate procedure.

ACTION/EXPECTED RESPONSE	RESPONSE NOT OBTAINED

C. Operator Actions

1. **Check entry conditions:**

   __ • S/I signal - HAS ACTUATED

   __ • EP/1/A/5000/E-0 (Reactor Trip Or Safety Injection) - HAS BEEN COMPLETED.

2. **IF any of the following procedures are in effect, THEN RETURN TO procedure and step in effect:**

   __ • EP/1/A/5000/ECA-0.0 (Loss Of All AC Power)

   OR

   __ • EP/1/A/5000/ECA-0.1 (Loss Of All AC Power Recovery Without S/I Required)

   OR

   __ • EP/1/A/5000/ECA-0.2 (Loss Of All AC Power Recovery With S/I Required)

   OR

   __ • Any orange or red path Critical Safety Function procedure.

__ **RETURN TO procedure and step in effect.**

__ 3. **Check at least one S/G pressure - STABLE OR GOING UP.**

Perform the following:

__ a. **IF** a controlled cooldown is in progress, **THEN GO TO** Step 4.

__ b. **IF** main steamlines not isolated, **THEN GO TO** EP/1/A/5000/E-2 (Faulted Steam Generator Isolation).

__ c. **IF** main steamlines isolated, **THEN GO TO** EP/1/A/5000/ECA-2.1 (Uncontrolled Depressurization Of All Steam Generators).

EPE: **Rediagnosis(Continued)**

K/A NO. **KNOWLEDGE**

EK3.1 Facility operating characteristics during transient conditions, including coolant chemistry and the effects of temperature, pressure, and reactivity changes and operating limitations and reasons for these operating characteristics.
IMPORTANCE RO 3.0 SRO 3.3

EK3.2 Normal, abnormal and emergency operating procedures associated with (Reactor Trip or Safety Injection/Rediagnosis).
IMPORTANCE RO 3.0 SRO 3.9

EK3.3 Manipulation of controls required to obtain desired operating results during abnormal, and emergency situations.
IMPORTANCE RO 3.5 SRO 3.3

EK3.4 RO or SRO function within the control room team as appropriate to the assigned position, in such a way that procedures are adhered to and the limitations in the facilities license and amendments are not violated.
IMPORTANCE RO 3.3 SRO 3.6

ABILITY

EA1. Ability to operate and / or monitor the following as they apply to the (Reactor Trip or Safety Injection/Rediagnosis)
(CFR: 41.7 / 45.5, 45.6)

EA1.1 Components, and functions of control and safety systems, including instrumentation, signals, interlocks, failure modes, and automatic and manual features.
IMPORTANCE RO 3.7 SRO 3.7

EA1.2 Operating behavior characteristics of the facility.
IMPORTANCE RO 3.3 SRO 3.6

EA1.3 Desired operating results during abnormal and emergency situations.
IMPORTANCE RO 3.4 SRO 3.8

EA2. Ability to determine and interpret the following as they apply to the (Reactor Trip or Safety Injection Rediagnosis)
(CFR: 43.5 / 45.13)

1 Pt. Given the following conditions on Unit 1:

- LOCA inside containment
- Containment pressure is 3.2 psig

Which one of the following is the preferred method to cooldown and depressurize the reactor coolant system per EP/1/A/5000/ES-1.2 (Post LOCA Cooldown and Depressurization)?

A. **Reset Main Steam Isolation Signal**
Cooldown using SM PORV
Depressurize using normal PZR Spray

B. **Reset Main Steam Isolation Signal**
Cooldown using condenser dumps
Depressurize using PZR PORV

C. **Can not reset Main Steam Isolation Signal**
Cooldown via manual operation of the SM PORVs
Depressurize using PZR PORV

D. **Can not reset Main Steam Isolation Signal**
Cooldown via manual operation of the SM PORVs
Depressurize using NV auxiliary spray

Bank Question: 1113 **Answer: B**

1 Pt. Given the following conditions on Unit 1:

- LOCA inside containment
- Containment pressure is 3.2 psig

Which one of the following is the preferred method to cooldown and depressurize the reactor coolant system per EP/1/A/5000/ES-1.2 (Post LOCA Cooldown and Depressurization)?

A. **Reset Main Steam Isolation Signal**
Cooldown using SM PORV
Depressurize using normal PZR Spray

B. **Reset Main Steam Isolation Signal**
Cooldown using condenser dumps
Depressurize using PZR PORV

C. **Can not reset Main Steam Isolation Signal**
Cooldown via manual operation of the SM PORVs
Depressurize using PZR PORV

D. **Can not reset Main Steam Isolation Signal**
Cooldown via manual operation of the SM PORVs
Depressurize using NV auxiliary spray

Distracter Analysis:. Main steam isolation can be reset above 3 psig. The preferred method is cooldown via condenser dump and depressurize using PZR PORV since NCP will be shutdown with containment pressure > 3 psig.

A. **Incorrect:**
Plausible:
B. **Correct:**
C. **Incorrect:**
Plausible:
D. **Incorrect**
Plausible:

Discuss A and the "preferred" use of "

LEVEL: RO & SRO

KA: W/E 03 EK1.2 (3.6/4.1)

SOURCE: NEW

LEVEL OF KNOWLEDGE: Analysis

AUTHOR: CWS

LESSON: OP-MC-EP-E1

OBJECTIVES: OP-MC-EP-E1 Obj. 4

REFERENCES: OP-MC-EP-E1 pages 113 and 117
EP/ES-1.2 pages 9 -12

Westinghouse
E03 LOCA Cooldown and Depressurization

K/A NO. KNOWLEDGE

EK1. Knowledge of the operational implications of the following concepts as they apply to the (LOCA Cooldown and Depressurization)
(CFR: 41.8 / 41.10 / 45.3)

EK1.1 Components, capacity, and function of emergency systems.
IMPORTANCE RO 3.4 SRO 4.0

EK1.2 Normal, abnormal and emergency operating procedures associated with (LOCA Cooldown and Depressurization).
IMPORTANCE RO 3.6 SRO 4.1

EK1.3 Annunciators and conditions indicating signals, and remedial actions associated with the (LOCA Cooldown and Depressurization).
IMPORTANCE RO 3.5 SRO 3.8

EK2. Knowledge of the interrelations between the (LOCA Cooldown and Depressurization) and the following:
(CFR: 41.7 / 45.7)

EK2.1 Components, and functions of control and safety systems, including instrumentation, signals, interlocks, failure modes, and automatic and manual features.
IMPORTANCE RO 3.6 SRO 4.0

EK2.2 Facility's heat removal systems, including primary coolant, emergency coolant, the decay heat removal systems, and relations between the proper operation of these systems to the operation of the facility.
IMPORTANCE RO 3.7 SRO 4.0

EK3. Knowledge of the reasons for the following responses as they apply to the (LOCA Cooldown and Depressurization)
(CFR: 41.5 / 41.10, 45.6 / 45.13)

EK3.1 Facility operating characteristics during transient conditions, including coolant chemistry and the effects of temperature, pressure, and reactivity changes and operating limitations and reasons for these operating characteristics.
IMPORTANCE RO 3.3 SRO 3.7

CLASSROOM TIME (Hours)

NLO	NLOR	LPRO	LPSO	LOR
N/A	N/A	5.0	5.0	4.0

OBJECTIVES

SEQ	OBJECTIVE	NLO	NLOR	LPRO	LPSO	LOR
1	Explain the purpose for each procedure in the E-1 series. EPE1001			X	X	
2	Discuss the entry and exit guidance for each procedure in the E-1 series. EPE1002			X	X	
3	Discuss the mitigating strategy (major actions) of each procedure in the E-1 series. EPE1003			X	X	X
4	Discuss the basis for any note, caution or step for each procedure in the E-1 series. EPE1004			X	X	X
5	Given the Foldout page discuss the actions included and the basis for these actions. EPE1005			X	X	X
6	Given the appropriate procedure, evaluate a given scenario describing accident events and plant conditions to determine any required action and its basis. EPE1006			X	X	X
7	Discuss the time critical task(s) associated with the E-1 series procedures including the time requirements and the basis for these requirements. EPE1007			X	X	X

STEP 9 Monitor shutdown margin during cooldown:

PURPOSE: To determine if shutdown margin is adequate for NC cooldown.

BASIS: Chemistry is notified to monitor shutdown margin during the cooldown to verify adequate NC boron concentration. Note that since S/I was in service, boron concentration is expected to be sufficient.

STEP 10 WHEN "P-11 PRESSURIZER S/I BLOCK PERMISSIVE" status light (1SI-18) lit, THEN depress "BLOCK" on Low Pressure Steamline Isolation block switches.

PURPOSE: To prevent main steamline isolation valve (MSIV) closure on low compensated steamline pressure during controlled NC cooldown.

BASIS: The Main Steam Line Isolation signal on low steamline pressure can be blocked during cooldown once the Pzr pressure decreases to less than 1955 psig. This prevents MSIV closure, thus allowing the cooldown by the preferred method of steam dump to the condenser.

NOTE After the Lo Pressure Steamline Isolation signal is blocked, Main Steam Isolation will occur if the high steam pressure rate setpoint is exceeded.

STEP 11 Initiate NC System cooldown to Cold shutdown:

PURPOSE: To begin or continue a controlled NC cooldown to cold shutdown using a preferred or alternate method with a specified maximum cooldown rate.

BASIS: The objective of a controlled cooldown is to reduce the overall temperature of the NC coolant and metal to reduce the need for supporting plant systems and equipment required for heat removal. The maximum cooldown rate of 100°F/hr will preclude violation of the Integrity Status Tree thermal shock limits. The preferred steam release path is to the condenser to conserve inventory; however, atmospheric release is the stated alternative. The ND system may have been placed in RHR mode later in the procedure, and should be used to cool down the NC to cold shutdown.

STEP 12 Check NC subcooling based on core exit T/Cs - GREATER THAN 0°F.

PURPOSE: To determine if the NC is subcooled so that subsequent actions dependent upon subcooling can be performed.

BASIS: If NC subcooling can be verified, the LOCA is most likely small and controllable, i.e., S/I flow equals or exceeds break flow. Subsequent steps that may be allowed include deliberate NC depressurization, NC pump restart, and S/I flow reduction. If subcooling is inadequate the operator is directed to increase S/I flow to restore subcooling.

STEP 15 Depressurize NC System to refill Pzr:

PURPOSE: To depressurize the NC to restore Pzr level using preferred or alternate methods for restoring Pzr level.

BASIS: The combination of subcooling and Pzr level ensures the NC conditions are under adequate operator control. Subcooling should have been established before entry to this step. If subcooling is lost during the depressurization, it will be reestablished after the depressurization is stopped as the NC continues to cool down.

If NC pump(s) are running, normal Pzr spray is the preferred means of restoring Pzr level. Level can be restored with normal spray since S/I flow increases and break flow decreases as the NC is depressurized.

If normal spray is not available, use of one Pzr PORV has priority over auxiliary spray. Auxiliary spray is used as a last resort to minimize thermal shock to the spray nozzles.

This step is performed immediately before starting a NC pump. Transitions from other steps when Pzr level is low are also possible. For all such entries, the NC should be subcooled prior to NC depressurization. Since this prior subcooling requirement ensures a small break, subcooling should be restored with continued cooldown if subcooling is lost during the depressurization.

ACTION/EXPECTED RESPONSE	RESPONSE NOT OBTAINED

9. **Monitor shutdown margin during cooldown as follows:**

NOTE Boron sample results are not required prior to initiating cooldown in subsequent steps. Periodic sampling was requested in Step 4.c.

a. WHEN each NC boron sample result is obtained, THEN:

__ 1) Perform shutdown margin calculation for Cold Shutdown PER OP/0/A/6100/006 (Reactivity Balance Calculation).

__ 2) Check shutdown margin - ADEQUATE.

__ 2) Notify station management.

__ 10. **WHEN "P-11 PRESSURIZER S/I BLOCK PERMISSIVE" status light (1SI-18) lit, THEN depress "BLOCK" on Low Pressure Steamline Isolation block switches.**

NOTE After the Low Pressure Steamline Isolation signal is blocked, maintaining steam pressure negative rate less than 2 PSIG per second will prevent a Main Steam Isolation.

11. **Initiate NC System cooldown to Cold Shutdown as follows:**

__ a. IF ND in RHR mode, THEN use ND System to cooldown while maintaining rate in NC T-Colds less than 100° F in an hour.

ACTION/EXPECTED RESPONSE	RESPONSE NOT OBTAINED

11. (Continued)

__ b. Check "C-9 COND AVAILABLE FOR STEAM DUMP" status light (1SI-18) - LIT.

b. Perform the following:

__ 1) Ensure Main Steam Isolation reset.

__ 2) Ensure SM PORVs reset.

__ 3) Dump steam using intact S/G SM PORVs while maintaining cooldown rate in NC T-Colds less than 100° F in an hour.

__ 4) GO TO Step 12.

__ c. Check MSIVs on all intact S/Gs - OPEN.

c. Perform the following:

1) Reset Main Steam Isolation signals:

__ a) Main Steam Isolation.

__ b) SM PORVs.

__ c) MSIV Bypass Valves.

__ 2) IF intact S/G MSIVs required closed to isolate a leak, THEN GO TO RNO for Step 11.f.

__ 3) Place "STEAM DUMP SELECT" in steam pressure mode.

__ 4) Place "STM PRESS CONTROLLER" in manual and close.

__ 5) Open MSIV bypass valves on intact S/Gs to equalize pressure across MSIVs.

6) WHEN pressure equalized, THEN:

__ a) Open all MSIVs on intact S/Gs.

__ b) Close all MSIV bypass valves.

__ c) Perform Steps 11.e and 11.f.

__ 7) GO TO Step 12.

ACTION/EXPECTED RESPONSE	RESPONSE NOT OBTAINED

11. (Continued)

d. Perform the following to place steam dumps in steam pressure mode:

__ 1) Place "STM PRESS CONTROLLER" in manual.

__ 2) Adjust "STM PRESS CONTROLLER" output to equal "STEAM DUMP DEMAND" signal.

__ 3) Place "STEAM DUMP SELECT" in steam pressure mode.

__ e. **WHEN** "P-12 LO-LO TAVG" status light (1SI-18) lit, **THEN** place steam dumps in bypass interlock.

__ f. Dump steam to condenser from intact S/Gs while maintaining cooldown rate in NC T-Colds less than 100° F in an hour.

__ f. Dump steam using intact S/G SM PORVs while maintaining cooldown rate in NC T-Colds less than 100° F in an hour.

__ 12. **Check NC subcooling based on core exit T/Cs - GREATER THAN 0° F.**

__ GO TO Step 27.

13. **Check if S/I in service using any of the following:**

__ • Any NI pump - ON

OR

__ • 1NI-9A (NC Cold Leg Inj From NV) - OPEN

OR

__ • 1NI-10B (NC Cold Leg Inj From NV) - OPEN

OR

__ • Any ND pump - ON WITH SUCTION ALIGNED TO FWST OR SUMP.

__ GO TO Step 23.

__ 14. **Place all Pzr heaters in manual and off.**

ACTION/EXPECTED RESPONSE	RESPONSE NOT OBTAINED

CAUTION **Voiding may occur in the NC System during NC System depressurization. This will cause Pzr level to rise rapidly.**

15. **Depressurize NC System to refill Pzr:**

__ a. Use normal Pzr spray until Pzr level - GREATER THAN 25% (50% ACC).

a. Perform the following:

__ 1) Use one Pzr PORV until Pzr level greater than 25% (50% ACC).

2) IF Pzr PORVs will not operate, THEN:

a) Align N_2 to all PORVs by opening:

__ • 1NI-430A (Emerg N2 From CLA To 1NC-34A)

__ • 1NI-431B (Emerg N2 From CLA To 1NC-32B & 36B).

__ b) Use one PORV to depressurize until Pzr level greater than 25% (50% ACC).

__ 3) IF Pzr PORV available, THEN GO TO Step 15.b.

(RNO continued on next page)

1 Pt.

A small break LOCA has occurred. Attempts to mitigate the event have been unsuccessful. Approximately one hour after the LOCA first occurred, the operators' noticed the Subcooling Margin Monitor in alarm.

Given the following conditions on the Inadequate Core Cooling Monitor plasma display:

- Core Exit Thermocouples 630 degrees.
- Subcooling is 0 degrees and ~~not changing~~ STABLE
- 'A' and 'B' Reactor Coolant Pumps have been secured
- 'C' and 'D' Reactor Coolant Pumps are running

Which one of the following is the required reactor vessel ~~d/p~~ ΔT/P?

REFERENCE PROVIDED

A. Train 'A' 23%, Train 'B' 23%

B. Train 'A' 23%, Train 'B' 15%

C. Train 'A' 15%, Train 'B' 23%

D. Train 'A' 15%, Train 'B' 15%

Bank Question: 1114 **Answer: C**

1 Pt.

A small break LOCA has occurred. Attempts to mitigate the event have been unsuccessful. Approximately one hour after the LOCA first occurred, the operators' noticed the Subcooling Margin Monitor in alarm.

Given the following conditions on the Inadequate Core Cooling Monitor plasma display:

- Core Exit Thermocouples 630 degrees.
- Subcooling is 0 degrees and not changing
- 'A' and 'B' Reactor Coolant Pumps have been secured
- 'C' and 'D' Reactor Coolant Pumps are running

Which one of the following is the required reactor vessel d/p?

REFERENCE PROVIDED
EP/1/A/5000/F-0 pages 4 and 5

A. **Train 'A' 23%, Train 'B' 23%**

B. **Train 'A' 23%, Train 'B' 15%**

C. **Train 'A' 15%, Train 'B' 23%**

D. **Train 'A' 15%, Train 'B' 15%**

Distracter Analysis:.

A. **Incorrect**:
Plausible:

B. **Incorrect**:
Plausible:

C. **Correct**:
Plausible:

D. **Incorrect**
Plausible:

LEVEL: RO & SRO

KA: WE/07 G2.1.25 (2.8/3.1)

SOURCE: NEW

LEVEL OF KNOWLEDGE: Comprehension

AUTHOR: CWS

LESSON: OP-MC-EP-F0

OBJECTIVES: OP-MC-EP-F0 Obj. 4

REFERENCES: OP-MC-EP-F0 page 35
EP/F-0 pages 4 and 5

CLASSROOM TIME (Hours)

NLO	NLOR	LPRO	LPSO	LOR
		2	2	2

OBJECTIVES

SEQ	OBJECTIVE	NLO	NLOR	LPRO	LPSO	LOR
1	State the purpose of each of the six CSF Status Trees.			X	X	
2	Explain the priority system associated with the CSF status trees.			X	X	X
3	Explain the "Rules of Usage" for Critical Safety Function status trees.			X	X	X
4	Explain the bases for all blocks in the six Status Trees.			X	X	X

4.4. Final Plant Status

The Core Cooling Tree has defined conditions in all four color priorities as follows:

RED PATH

There are two conditions which represent an Extreme challenge to Core Cooling:

1. Core exit T/Cs are greater than 1200°F. This condition can only occur if most of the inventory has been removed from the core and heat generation is superheating the steam.
2. Core exit T/Cs are less than 1200°F, but still high enough (> 700°F) to show that superheated steam is being generated in the core, and no NC pumps are running and water level in the core is low (< 39% LR RVLIS).

These two conditions will eventually lead to a failure of the fuel/clad matrix barrier, thus it is considered an Extreme challenge.

ORANGE PATH

There are conditions which represent a Severe challenge to the fuel barrier:

Core exit T/Cs are less than 1200°F but subcooling is less than or equal to 0°F and;

At least one NC Pump is on, but vessel D/P is less than required,

OR

No NC pumps are on, core exit T/Cs are greater than or equal to 700°F, but RVLIS shows level in the vessel is greater than 39%,

OR

No NC pumps are on, core exit T/Cs are less than 700°F, vessel level is less than or equal to 39%,

YELLOW PATH

If a NC Pump is running and reactor vessel D/P is greater than required 50%, or if no NC Pumps are running, core exit T/Cs are less than 700°F, and vessel level is greater than 39%, but subcooling is less than or equal to 0°F, then the condition is considered to be not satisfied.

GREEN PATH

The CSF is satisfied only when NC system Subcooling is greater than 0°F.

4.5. Summary/Objective Review

The objective of Status Tree FRC is to monitor the state of core heat removal, and represents the second highest priority CSF.

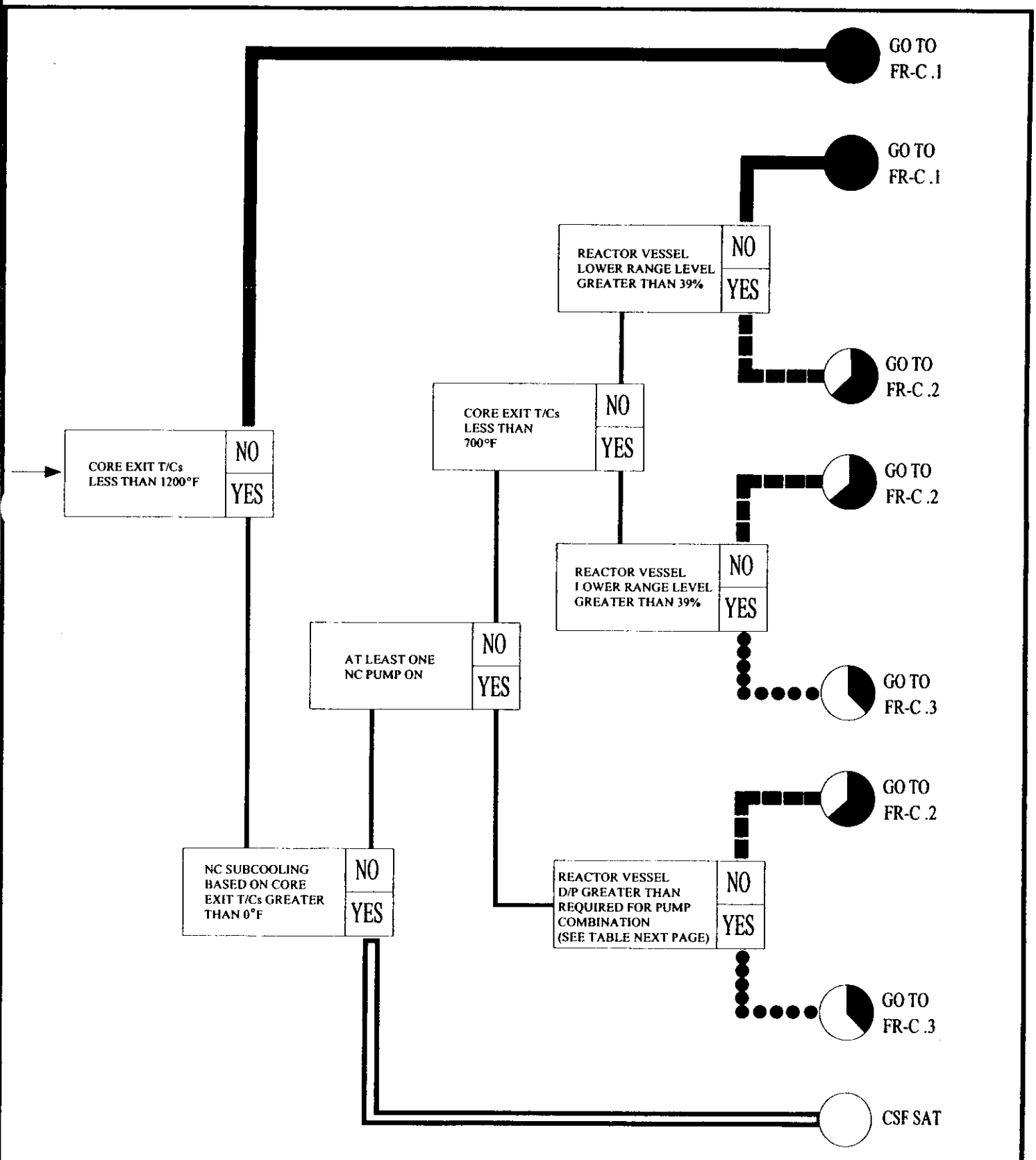
GO TO FR-C .1
GO TO FR-C .1
REACTOR VESSEL LOWER RANGE LEVEL GREATER THAN 39%
NO
YES
GO TO FR-C .2
CORE EXIT T/Cs LESS THAN 700°F
NO
YES
CORE EXIT T/Cs LESS THAN 1200°F
NO
YES
GO TO FR-C .2
REACTOR VESSEL LOWER RANGE LEVEL GREATER THAN 39%
NO
YES
AT LEAST ONE NC PUMP ON
NO
YES
GO TO FR-C .3
GO TO FR-C .2
NC SUBCOOLING BASED ON CORE EXIT T/Cs GREATER THAN 0°F
NO
YES
REACTOR VESSEL D/P GREATER THAN REQUIRED FOR PUMP COMBINATION (SEE TABLE NEXT PAGE)
NO
YES
GO TO FR-C .3
CSF SAT

"REACTOR VESSEL D/P" SETPOINTS FOR DEGRADED CORE COOLING

Number of NC Pumps On	Required "REACTOR VESSEL D/P"			
	TRN A With 1A NC Pump		TRN B With 1C NC Pump	
	ON	OFF	ON	OFF
4	44%	N/A	44%	N/A
3	30%	24%	30%	24%
2	23%	15%	23%	15%
1	16%	10%	16%	10%

2.1 Conduct of Operations (continued)

2.1.18 **Ability to make accurate, clear and concise logs, records, status boards, and reports.**
(CFR: 45.12 / 45.13)
IMPORTANCE RO 2.9 SRO 3.0

2.1.19 **Ability to use plant computer to obtain and evaluate parametric information on system or component status.**
(CFR: 45.12)
IMPORTANCE RO 3.0 SRO 3.0

2.1.20 **Ability to execute procedure steps.**
(CFR: 41.10 / 43.5 / 45.12)
IMPORTANCE RO 4.3 SRO 4.2

2.1.21 **Ability to obtain and verify controlled procedure copy.**
(CFR: 45.10 / 45.13)
IMPORTANCE RO 3.1 SRO 3.2

2.1.22 **Ability to determine Mode of Operation.**
(CFR: 43.5 / 45.13)
IMPORTANCE RO 2.8 SRO 3.3

2.1.23 **Ability to perform specific system and integrated plant procedures during all modes of plant operation.**
(CFR: 45.2 / 45.6)
IMPORTANCE RO 3.9 SRO 4.0

2.1.24 **Ability to obtain and interpret station electrical and mechanical drawings.**
(CFR: 45.12 / 45.13)
IMPORTANCE RO 2.8 SRO 3.1

2.1.25 **Ability to obtain and interpret station reference materials such as graphs, monographs, and tables which contain performance data.**
(CFR: 41.10 / 43.5 / 45.12)
IMPORTANCE RO 2.8 SRO 3.1

2.1.26 **Knowledge of non-nuclear safety procedures (e.g. rotating equipment, electrical, high temperature, high pressure, caustic, chlorine, oxygen and hydrogen).**
(CFR: 41.10 / 45.12)
IMPORTANCE RO 2.2 SRO 2.6

1 Pt. Given the following conditions on Unit 1:

- EP/ES.0.3 Natural Circulation Cooldown with Steam Void in Vessel is in progress
- Reactor Coolant Temperature is 450°F
- Reactor Coolant Pressure is 800 psig
- RVLIS is NOT available
- ~~Charging and Letdown flows are matched~~

With RVLIS NOT available to monitor void growth in the vessel which one of the following combined indications can be used to verify the presence of a void when reactor coolant pressure is decreased?

Pressurizer level will ____(1)____ when charging flow _____(2)_____ letdown flow?

	(1)	(2)
A.	**Remain Constant**	**is greater than**
B.	**Go Up**	**matches**
C.	**Go Down**	**is less than**
D.	**Remain Constant**	**matches**

Remain constant when chg & letdown flow

Return to instructor

Bank Question: 1115 **Answer: B**

1 Pt. Given the following conditions on Unit 1:

- EP/ES.0.3 Natural Circulation Cooldown with Steam Void in Vessel is in progress
- Reactor Coolant Temperature is 450°F
- Reactor Coolant Pressure is 800 psig
- RVLIS is NOT available
- Charging and Letdown flows are matched

With RVLIS NOT available to monitor void growth in the vessel which one of the following combined indications can be used to verify the presence of a void when reactor coolant pressure is decreased?

Pressurizer level will ____(1)____ when charging flow _____(2)_____ letdown flow?

A.	**Remain Constant**	**is greater than**
B.	**Go Up**	**matches**
C.	**Go Down**	**is less than**
D.	**Remain Constant**	**matches**

Distracter Analysis: .Student must realize that pressurizer level increases are generated by either a Tave increase or void growth, or charging flow > letdown flow. If charging and letdown are matched with temp. stable, the only plausible reason for pressurizer level increase is void growth.

A. **Incorrect**:
Plausible:

B. **Correct**:
Plausible:

C. **Incorrect**:
Plausible:

D. **Incorrect**
Plausible:

LEVEL: RO & SRO

KA: W/E10 EA1.2 (3.6/3.8)

SOURCE: BANK Braidwood NRC Exam 2002

LEVEL OF KNOWLEDGE: Comprehension

AUTHOR: CWS

LESSON: O-MC-EP-E0

OBJECTIVES: OP-MC-EP-E0 Obj. 5

REFERENCES: OP-MC-EP-E0 pages 171 and 193
EP/ES-0.3 page 16

EPE: **Natural Circulation with Steam Void in Vessel with/without RVLIS Continued)**

K/A NO. **KNOWLEDGE**

EK3.1 Facility operating characteristics during transient conditions, including coolant chemistry and the effects of temperature, pressure, and reactivity changes and operating limitations and reasons for these operating characteristics.
IMPORTANCE RO 3.4 SRO 3.7

EK3.2 Normal, abnormal and emergency operating procedures associated with (Natural Circulation with Steam Void in Vessel with/without RVLIS).
IMPORTANCE RO 3.2 SRO 3.7

EK3.3 Manipulation of controls required to obtain desired operating results during abnormal, and emergency situations.
IMPORTANCE RO 3.4 SRO 3.6

EK3.4 RO or SRO function within the control room team as appropriate to the assigned position, in such a way that procedures are adhered to and the limitations in the facilities license and amendments are not violated.
IMPORTANCE RO 3.4 SRO 3.7

ABILITY

EA1. Ability to operate and / or monitor the following as they apply to the (Natural Circulation with Steam Void in Vessel with/without RVLIS)
(CFR: 41.7 / 45.5 / 45.6)

EA1.1 Components, and functions of control and safety systems, including instrumentation, signals, interlocks, failure modes, and automatic and manual features.
IMPORTANCE RO 3.8 SRO 3.6

EA1.2 Operating behavior characteristics of the facility.
IMPORTANCE RO 3.6 SRO 3.8

EA1.3 Desired operating results during abnormal and emergency situations.
IMPORTANCE RO 3.4 SRO 3.7

CLASSROOM TIME (Hours)

NLO	NLOR	LPRO	LPSO	LOR
N/A	N/A	2.0	2.0	1.0

OBJECTIVES

SEQ	OBJECTIVE	NLO	NLOR	LPRO	LPSO	LOR
1	Describe the accidents that are diagnosed in E-0 and the diagnostic sequence. EPE0001			X	X	X
2	Explain the purpose for each procedure in the E-0 series. EPE0002			X	X	
3	Discuss the entry and exit guidance for each procedure in the E-0 series. EPE0003			X	X	
4	Discuss the symptoms of a reactor trip and/or safety injection. EPE0004			X	X	
5	Discuss the mitigating strategy (major actions) of each procedure in the E-0 series. EPE0005			X	X	X
6	Discuss the basis for any note, caution or step for each procedure in the E-0 series. EPE0006			X	X	X
7	Describe the immediate actions and include the RNO when appropriate. EPE0007			X	X	X
8	Describe the actions included on the E-0 Foldout page and the basis for these actions. EPE0008			X	X	X
9	Given the Foldout page, other than E-0, discuss the actions included and the basis for these actions. EPE0009			X	X	X

7.3. Major Actions

The recovery/restoration technique of ES-0.3 includes the following five major action categories.

1. Try to start a NC pump.
2. Cool down and depressurize the NC while monitoring void growth.
3. Block Auto S/I.
4. Place the ND system in service.
5. Cool down to cold shutdown.

The following subsections provide a more detailed discussion of each major action category.

7.3.1 Try to start a NC pump

The operator initially prepares for a natural circulation cooldown and depressurization in ES-0.2, Natural Circulation Cooldown. Before continuing the cooldown/depressurization instructed by ES-0.3, an attempt is made to start a NC pump, since it is preferred to cool down the NC system under forced circulation. If this attempt is successful, the operator is instructed to transfer to the appropriate plant procedure for cooldown under forced circulation.

If proper conditions for starting a NC pump can be established during the course of this procedure, the operator is instructed to repeat the step for starting a NC pump, and to exit if appropriate.

7.3.2 Cool down and depressurize the NC System while monitoring void growth

Before cooling down and depressurizing the NC System, a pressurizer level is established to accommodate void growth. During the cooldown/depressurization phase, a cooldown rate of less than 100°F/hr is maintained, together with a minimum NC subcooling. NC System temperature and pressure should also be maintained within Technical Specification cooldown limits. To monitor void growth and maintain pressure control, reactor vessel UR level and pressurizer level instrumentation are checked for proper values.

STEP 26 Determine if NC System depressurization to atmospheric conditions is permitted:

PURPOSE: To ensure the entire NC is below 200°F before final depressurization.

BASIS: As long as the entire NC is below 200°F, depressurization to atmospheric pressure will not cause any void formation in the system. Upper head T/Cs (Unit 1 only) can give a good indication of upper head fluid temperature. A reactor vessel UR level greater than 100% and stable will imply at least saturated conditions.

Any Pzr level increase or reactor vessel UR level less than 100%, following a NC depressurization at this time, would indicate the upper head fluid temperature is not below 200°F, and the NC should be repressurized to collapse the void.

The method for determining S/G U-tube temperature conditions consists of steaming the S/Gs until they stop steaming. This implies that no ΔT exists and the primary/secondary temperatures are approximately equal.

An exit transition to OP/1/A/6100/02, Controlling Procedure for Unit Shutdown, is provided to maintain and continue any cold shutdown operations.

7.5. ES-0.3 Enclosures

Enclosure 1 - Foldout

1. S/I Actuation Criteria (Same as ES-0.2)
2. CA Suction Sources (Same as ES-0.2)
3. Starting a NC pump (Same as ES-0.2)

Enclosure 2, NC System Cooldown Monitoring (Same as ES-0.2)

ACTION/EXPECTED RESPONSE	RESPONSE NOT OBTAINED

26. **Determine if NC System depressurization to atmospheric pressure is permitted:**

a. Check the following:

__ • All T-Hots - LESS THAN 200°F

__ • All S/G pressures - AT 0 PSIG

__ • "REACTOR VESSEL UR LEVEL" - GREATER THAN OR EQUAL TO 100%.

__ a. **RETURN TO** Step 21.

b. Check Upper head T/Cs (read on OAC) - LESS THAN 200°F:

__ • M1A0142 (Core location G-08, T/C #13)

__ • M1A0155 (Core location F-01, T/C #43)

__ • M1A0166 (Core location J-06 T/C #17)

__ • M1A0251 (Core location M-07, T/C #59)

__ • M1A0268 (Core location A-10, T/C #2).

b. Perform the following:

__ 1) **IF** OAC out of service, **THEN** have Reactor group determine temperatures from incore instrument panel.

__ 2) **IF** upper head T/Cs are unavailable, **THEN GO TO** Step 26.d.

__ 3) **IF** any upper head T/C greater than 200°F, **THEN RETURN TO** Step 21.

__ c. **GO TO** OP/1/A/6100/002 (Controlling Procedure For Unit Shutdown).

d. Contact station management to evaluate when further NC system depressurization is allowed, using the following information as required:

__ • With all CRDM fans off, it may take 88 hours for the upper head region to cool down to less than 200°F.

__ • If pressure is lowered slowly, while monitoring Upper Range RVLIS and Pzr level, void formation will be detected. This can determine saturation pressure and temperature of water in upper head.

..e10.ea1.2	7/17/2002						
Braidwood 1	**Exam Level**	R	Mark Question			Print Recor	New Searc	Exit

Question

Natural Circulation with Steam Void with/without RVLIS
The following conditions exist on Unit 1

- 1BwEP ES-0.4, "Natural Circulation Cooldown with Steam Void in Vessel (Without RVLIS) Unit 1" is in progress
- RCS Temperature is 450F
- RCS Pressure is 800 psig
- RVLIS is NOT available
- Charging and letdown flows are matched

With RVLIS NOT available to monitor for void growth in the vessel, which of the following combined indications can be used to verify the presence of a void when letdown flow is increased > charging flow?

RCS pressure will _____(1)_____ and Pressurizer level will _____(2)_____.

_____(1)_____	_____(2)_____
Answer: Decrease	Increase
Distracter 1 Increase	Increase
Distracter 2 Increase	Decrease
Distracter 3 Decrease	Decrease

Distracter Analysis:

Answer:

Distracter 1:

Distracter 2:

Distracter 3:

1 Pt

Unit 1 has experienced a ~~pipe rupture inside containment~~ unexplained rise in containment sump level. Emergency procedures prescribe successful response mechanisms if containment water level remains between 3.5 and 12.5 feet.

Per EP/1/A/5000/FR-Z.2 (Response to Containment Flooding) which of the following systems could cause containment water level to exceed 12.5 feet?

A. Reactor Coolant system (NC)

B. Chemical Volume and Control system (NV)

C. Residual Heat Removal system (ND)

D. Nuclear Service Water system (RN)

Bank Question: 1116 **Answer: D**

1 Pt

Unit 1 is in mode 4 or 5 has experienced a pipe rupture inside containment. Emergency procedures prescribe successful response mechanisms if containment water level remains between 3.5 and 12.5 feet.

Per EP/1/A/5000/FR-Z.2 (Response to Containment Flooding) which of the following systems could cause containment water level to exceed 12.5 feet?

A. Reactor Coolant system (NC)

B. Chemical Volume and Control system (NV)

C. Residual Heat Removal system (ND)

D. Nuclear Service Water system (RN)

Distracter Analysis: Due to system design, the only source of water large enough to cause 12.5 ft. would be from the RN system.

A. Incorrect:
B. Incorrect:
Plausible:
C. Incorrect:
Plausible:
D. Correct:

Level: RO and SRO

KA: EPE W/E 15 EK3.1 (2.7/2.9)

Lesson Plan Objective: EP-MC-EP-F0 Obj. 4

Source: NEW

Level of knowledge: Comprehension

References:
1. OP-MC-EP-F0 page 65
2. OP-MC-EP-FRZ page 45
3. EP/5000/F-0 page 9
4. EP/FR-Z.2 page 2

may want to include time in step.

Westinghouse
E15 Containment Flooding

K/A NO. KNOWLEDGE

EK1. Knowledge of the operational implications of the following concepts as they apply to the (Containment Flooding)
(CFR: 41.8 / 41.10, 45.3)

EK1.1 Components, capacity, and function of emergency systems.
IMPORTANCE RO 2.8 SRO 3.0

EK1.2 Normal, abnormal and emergency operating procedures associated with (Containment Flooding).
IMPORTANCE RO 2.7 SRO 2.9

EK1.3 Annunciators and conditions indicating signals, and remedial actions associated with the (Containment Flooding).
IMPORTANCE RO 2.8 SRO 3.0

EK2. Knowledge of the interrelations between the (Containment Flooding) and the following:
(CFR: 41.7 / 45.7)

EK2.1 Components, and functions of control and safety systems, including instrumentation, signals, interlocks, failure modes, and automatic and manual features.
IMPORTANCE RO 2.8 SRO 2.9

EK2.2 Facility's heat removal systems, including primary coolant, emergency coolant, the decay heat removal systems, and relations between the proper operation of these systems to the operation of the facility.
IMPORTANCE RO 2.7 SRO 2.9

EK3. Knowledge of the reasons for the following responses as they apply to the (Containment Flooding)
(CFR: 41.5 / 41.10, 45.6, 45.13)

EK3.1 Facility operating characteristics during transient conditions, including coolant chemistry and the effects of temperature, pressure, and reactivity changes and operating limitations and reasons for these operating characteristics.
IMPORTANCE RO 2.7 SRO 2.9

CLASSROOM TIME (Hours)

NLO	NLOR	LPRO	LPSO	LOR
		2	2	2

OBJECTIVES

SEQ	OBJECTIVE	NLO	NLOR	LPRO	LPSO	LOR
1	State the purpose of each of the six CSF Status Trees.			X	X	
2	Explain the priority system associated with the CSF status trees.			X	X	X
3	Explain the "Rules of Usage" for Critical Safety Function status trees.			X	X	X
4	Explain the bases for all blocks in the six Status Trees.			X	X	X

CONTAINMENT PRESSURE LESS THAN 3 PSIG

PURPOSE: To determine if the pressure in containment is less than 3 psig.

BASIS: Pressure above 3 psig indicates a significant energy release to containment and merits prompt operator action to ensure operation of containment pressure suppression equipment. The 3-psig indication is considered a severe challenge to the containment barrier, but gives the operator a significant margin for pressure suppression and an ORANGE priority is warranted. The appropriate procedure for function restoration is FR-Z.1, Response to High Containment Pressure.

CONTAINMENT SUMP LEVEL LESS THAN 12.5 FEET

PURPOSE: To determine if containment is flooded.

BASIS: High energy line breaks could result in a large volume of water being pumped into containment. As the water level rises, it might threaten the availability of equipment required for long term cooling of the core and/or containment. Such a high water level is considered a severe challenge to the containment barrier and an ORANGE priority is warranted. The appropriate procedure for function restoration is FR-Z.2, Response to Containment Flooding.

4.4. Detailed Description Of Procedure Steps

STEP 1 Monitor foldout page.

PURPOSE: To remind the operator that the foldout page for FR-Z.2 should be open.

BASIS: The Foldout page, included as Enclosure 1, provides a list of important items that should be continuously monitored. If any of the parameters exceed their limits, the appropriate operations should be initiated.

STEP 2 Try to identify unexpected source of water to containment sump:

PURPOSE: To identify unexpected source of water in sump.

BASIS: This step instructs the operator to try to identify the unexpected source of the water in the containment sump. Containment flooding is a concern since critical plant components necessary for plant recovery may be damaged and rendered inoperable. A water level greater than the design basis flood level provides an indication that water volumes other than those represented by the emergency stored water sources (e.g., FWST, CLAs, etc.) have been introduced into the containment sump. All possible plant sources which penetrate containment are included in this step. These systems provide large water flow rates to components inside the containment and a major leak or break in one of these lines could introduce large quantities of water into the sump. Identification and isolation of any broken or leaking water line inside containment is essential to maintaining the water level below the design basis flood level.

STEP 3 WHEN ND is aligned for Cold Leg Recirc, THEN contact TSC to:

PURPOSE: To notify Station Management to determine the radioactivity of the sump fluid.

BASIS: This step instructs the Station Management to have Radwaste Chemistry determine the activity level in the containment sump in order to provide information concerning the possible transfer of containment sump water to plant storage tanks outside the containment. The transfer of containment sump water from the containment to other plant storage tanks may be desirable in order to minimize the potential for flooding of critical plant components inside the containment. However, the ultimate disposition of this water outside the containment will depend, in large part, on the level of radioactivity in the water. Management should evaluate the event and provide specific recommendations to the operators concerning the high containment sump levels.

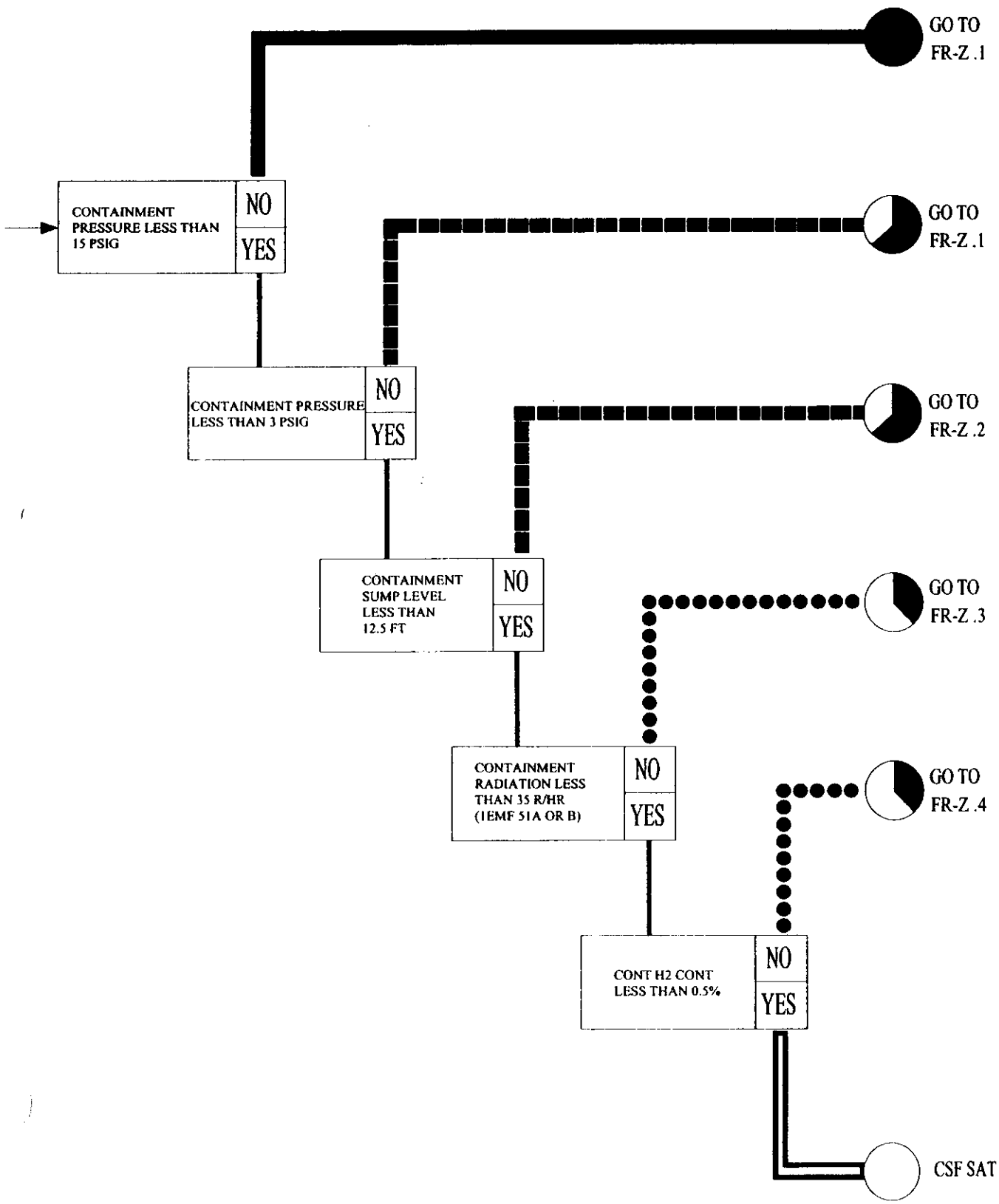
CONTAINMENT PRESSURE LESS THAN 15 PSIG
NO
YES
GO TO FR-Z .1
CONTAINMENT PRESSURE LESS THAN 3 PSIG
NO
YES
GO TO FR-Z .1
CONTAINMENT SUMP LEVEL LESS THAN 12.5 FT
NO
YES
GO TO FR-Z .2
CONTAINMENT RADIATION LESS THAN 35 R/HR (1EMF 51A OR B)
NO
YES
GO TO FR-Z .3
CONT H2 CONT LESS THAN 0.5%
NO
YES
GO TO FR-Z .4
CSF SAT

ACTION/EXPECTED RESPONSE	RESPONSE NOT OBTAINED

C. Operator Actions

__ 1. **Monitor foldout page.**

2. **Try to identify unexpected source of water to containment sump:**

   a. Attempt to identify leak using any available indication:

   __ • System flow

   __ • System pressure

   __ • Tank levels

   __ • Temperatures of components cooled by affected system.

   __ b. Prior to isolating cooling to any component, it should be removed from service.

   c. IF leakage is suspected OR identified from RN System, THEN close its containment isolation valves:

   __ • 1RN-253A (RB Non Ess Sup Cont Inside Isol)

   __ • 1RN-276A (RB Non Ess Ret Cont Inside Isol)

   __ • 1RN-252B (RB Non Ess Sup Cont Outside Isol)

   __ • 1RN-277B (RB Non Ess Ret Cont Outside Isol).

1 Pt. Which ONE (1) of the following represents the expected leakoff flow rates associated with NORMAL OPERATION of the Reactor Coolant Pump (NCP) Seals?

	#1 Seal	#2 Seal	#3 Seal
A.	3 gpm	3 gph	100 cc/hr
B.	6 gpm	3 gpm	300 cc/hr
C.	6 gpm	3 gph	100 cc/hr
D.	3 gpm	3 gpm	300 cc/hr

Bank Question: 1117 **Answer: A**

1 Pt. Which ONE (1) of the following represents the ~~expected~~ approximate leakoff flow rates associated with NORMAL OPERATION of the Reactor Coolant Pump (NCP) Seals?

	#1 Seal	#2 Seal	#3 Seal
A.	3 gpm	3 gph	100 cc/hr
B.	6 gpm	3 gpm	300 cc/hr
C.	6 gpm	3 gph	100 cc/hr
D.	3 gpm	3 gpm	300 cc/hr

Distracter Analysis: correct

A. ~~Incorrect~~:
Plausible:

B. Incorrect:
Plausible:

C. Incorrect:
Plausible:

D. Incorrect
Plausible:

actual 3 gph - 100 cc/hr

LEVEL: RO & SRO

KA: 003 K1.03 (3.3/3.6)

SOURCE: BANK McGuire NRC Exam 1997

LEVEL OF KNOWLEDGE: Memory

AUTHOR:

LESSON: OP-MC-PS-NCP

OBJECTIVES: OP-MC-PS-NCP Obj.12

REFERENCES: OP-MC-PS-NCP pages 27 and 29

003 Reactor Coolant Pump System (RCPS)

TASK:
Start an RCP
Monitor the operation of the RCPS
Perform a normal RCP shutdown
Vent RCP seals
Adjust flushing flow to RCP seals

K/A NO.	KNOWLEDGE	IMPORTANCE RO	IMPORTANCE SRO
K1	**Knowledge of the physical connections and/or cause-effect relationships between the RCPS and the following systems:** (CFR: 41.2 to 41.9 / 45.7 to 45.8)		
K1.01	RCP lube oil	2.6	2.8
K1.02	RCP motor cooling and ventilation	2.6	2.8
K1.03	RCP seal system	3.3	3.6
K1.04	CVCS	2.6*	2.9*
K1.05	CCS	2.2	2.4*
K1.06	SWS	1.9	2.1
K1.07	RCP vibration monitoring	2.4	2.9
K1.08	Containment isolation	2.7*	3.0*
K1.09	RCS drain tank	2.0	2.2
K1.10	RCS	3.0	3.2
K1.11	Sound monitoring	2.3	2.5
K1.12	CCWS	3.0	3.3
K1.13	RCP bearing lift oil pump	2.5	2.5
K2	**Knowledge of bus power supplies to the following:** (CFR: 41.7)		
K2.01	RCPS	3.1	3.1
K2.02	CCW pumps	2.5*	2.6*
K2.03	RCP lube oil pumps	2.2	2.2
K2.04	Containment isolation valves for RCP cooling water	2.3	2.4
K2.05	RCP bearing lift oil pump	2.1	1.9
K3	**Knowledge of the effect that a loss or malfunction of the RCPS will have on the following:** (CFR: 41.7 / 45.6)		
K3.01	RCS	3.7	4.0
K3.02	S/G	3.5	3.8
K3.03	Feedwater and emergency feedwater	2.8	3.1
K3.04	RPS	3.9	4.2
K3.05	ICS	3.6*	3.7*
K3.06	MRSS	2.2	2.4

OBJECTIVES

	OBJECTIVE	NLO	NLOR	LPRO	LPSO	LOR
8	Describe the controls and any interlocks associated with the Reactor Coolant Pump and Motor.	X	X	X	X	X
9	Given a parameter associated with the Reactor Coolant Pumps or Motors describe the indications for that parameter.			X	X	X
10	Given a limit and/or precaution associated with an operating procedure, discuss its basis and applicability.			X	X	X
11	Explain the reason for closing the NC Pump Seal Return valves when NCS pressure is below 100 psi.		X	X	X	X
12	Concerning the NC Pump seals: • Describe the general design of the NC Pump Seals. • Discuss the purpose of seal injection. • Discuss the flowpaths, flowrates and differential pressures associated with each seal. • Discuss the purpose of the seal injection throttle valves. • Discuss the purpose of the standpipes and the operation of the standpipe (draining and filling).	X	X	X	X	X
13	Describe the operation for adjusting NC Pump seal controlled leakage.		X	X	X	X
14	Concerning NC Pump Vibration Monitoring System: • State the purpose of the system. • Discuss the operation of the system.			X X	X X	 X
15	State the parameters and setpoints which would require an NC Pump to be stopped.			X	X	X

Objective #11, 12

Each of the NC Pump No. 1 seal leakoff lines have seal return isolation valves. These valves are closed when NC System pressure is less than 100 psig in order to prevent any backflow from the NV System through the seal return filter to the NC Pump seals. Backflow would flush any contaminants/particulates out of the filter and into the seal.

These isolation valves are also used in the event of a failure (excessive leakage) of the No. 1 seal. When No. 1 seal leakoff flow is high, some of this flow comes from the NC System up through the thermal barrier. There may be insufficient heat removal by the thermal barrier heat exchanger to adequately cool the leakoff flow. This hotter water could cause damage to the No. 2 and 3 seals. When the seal return valve is closed, the No. 2 seal becomes the primary seal and maintains the large ΔP. The No. 2 seal is designed to withstand this high ΔP for a short period and the pump must be stopped within 30 minutes and the plant must be cooled down and depressurized so that repairs can be made.

The NC Pumps are equipped with a common No. 1 seal bypass valve. This valve is only opened, at low system pressures (100-1000 psig) when there is insufficient flow to adequately cool the seal (leakoff temperature >200°F).

The leakoff from each pump is piped to a common manifold and then via a seal water filter through a seal water heat exchanger where the temperature is reduced to about that of the VCT. Leakage past the No. 1 seal provides a constant pressure on the No. 2 seal and constant pressure on the No. 3 seal. A standpipe is provided to assure a backpressure of at least 7 feet of water on the No. 3 seal. In addition, the standpipe is used to warn of excessive No. 2 seal leakage flow to the reactor coolant drain tank (NCDT). Excessive No. 2 seal leakage results in a rise in the standpipe level and eventual overflow to the NCDT via a second overflow connection.

A total of 8 gpm is supplied to each NC pump for seal injection water. 5 gpm is directed down through the thermal barrier labyrinth seal and into the NC System. 3 gpm flows up through the lower radial bearing.

A minimum differential pressure of 200 psid is required across the No. 1 seal surfaces to ensure proper water film during pump operation. The inlet pressure is approximately 2250 psig (NC System pressure) and the outlet pressure is 15-50 psig (VCT pressure) during normal operation. Approximately 3 gpm leaks off from the No. 1 seal of which 3 gph flows to the No. 2 seal. Proper VCT pressure is required to ensure adequate backpressure for proper flow through the No. 2 seal.

Objective #12

Approximately 3 gph is directed through the No. 2 seal. The pressure drops from 50 psig to 3 psig across this seal. All the No. 2 seal leakoff, except for 100 cc/hr, is directed to a standpipe. The water level in the standpipe is maintained to provide sufficient backpressure on the No. 2 seal to ensure flow through the No. 3 seal. All excess water from the standpipe is discharged to the NCDT through an orifice. Improper standpipe level can adversely affect seal operation, therefore there is a high and low level alarm provided for the standpipe to warn of potential seal problems. A high level alarm could indicate excessive No. 2 seal leak-off flow.

Approximately 100 cc/hr from the No. 2 seal is directed to the No. 3 seal. The pressure drops from 3 psig to atmospheric across this seal. After passing through the seal the leakoff is directed to the NCDT.

The minimum and maximum flow rates and temperatures for seal injection water are 6 gpm and 50° F and 12 gpm and 150° F, respectively.

Objective #9

No.1 seal temperature, injection flow, and ΔP indications are provided on the Main Control Board. Recorders are provided for No. 1 seal leakoff flow indicating low range (0-2 gpm) and high range (0-6 gpm) flow. Other indications are provided on the OAC.

2.4 NC Pump Monitor System

Objective #15

The purpose of the EME system is to monitor the voltage and frequency of the 6900V power source for the reactor coolant pump motors. Following a drop in either parameter below its setpoint, the monitoring system will provide a signal to the Solid State Protection System (SSPS) to indicate the condition. If an under-frequency condition exists on 2/4 monitored channels, all NC Pump circuit breakers will trip and if reactor power is greater than P-7 (10%), the reactor will also trip.

Due to the direct impact of the EME system on the performance of the Reactor Protection System (through the SSPS reactor trip circuit), it is classified as nuclear safety related. By definition, the Reactor Protection System is designed to shut down the reactor to protect against fuel cladding damage or loss of system integrity, which may result in the release of radioactive fission products into Containment.

The under-voltage and under-frequency monitors are voltage and frequency sensing devices, respectively. Each monitor's output sends a signal to its corresponding auxiliary relay which in turn sends a signal to the SSPS to indicate the condition. If 2 out of the 4 channels monitored indicate an under-voltage (or under-frequency) condition, the SSPS will initiate a reactor trip (1/4 causes an NC Pump Bus Alert alarm in the Control Room). As listed in Technical Specification Table 3.3.1-1 #11 and # 12, the under-voltage monitor shall indicate an under-voltage condition if the voltage drops to 5016V on the 6900V bus. Likewise, the under-frequency monitor shall indicate an under-frequency condition if the frequency drops to 55.9 Hz on the 6900V bus.

Bank Question: 126 ***Answer: A***

---

1 Pt(s) Which ONE (1) of the following represents the expected leakoff flow rates associated with NORMAL OPERATION of the Reactor Coolant Pump (NCP) Seals?

	#1 Seal	#2 Seal	#3 Seal
A.	**3 gpm**	**3 gph**	**100 cc/hr**
B.	**6 gpm**	**3 gpm**	**300 cc/hr**
C.	**6 gpm**	**3 gph**	**100 cc/hr**
D.	**3 gpm**	**3 gpm**	**300 cc/hr**

MISCINFO: RO ONLY **SOURCE:** Bank PSNCP021

REFERENCES: OP-MC-PS-NCP page 19, 21

LESSON: OP-MC-PS-NCP **TASK:**

OBJECTIVE: LPRO 12 **TIME:**

KA: 003000A109(2.8/2.8) **DATE:** 5/21/97

1 Pt. Given the following conditions on Unit 1:

- 100% Power
- Primary chemistry reports to the Control Room that Reactor Coolant is in Action Level 3 for high sulfates.
- AP/46 (Abnormal Primary or Secondary "Chemistry) has been implemented.

Enclosure 1, steps 1 and 2 states: "Check is Action Level 3 – CURRENTLY IN EFFECT" and then states to perform the appropriate Action Level 3 actions.

Which one of the following describes the purpose of these steps?

A. **Represents the value, outside of which indicates that long-term system reliability may be affected. These steps ensure letdown flow through the NV demineralizers is increased to maximize cleanup.**

B. **Represents the value, above which significant damage could be done to the system in the short term, warranting prompt correction of the abnormal condition. These steps ensure a technical evaluation is conducted by station management to determine if the unit should be shutdown.**

C. **Represents a condition where it is inadvisable to continue to operate the plant. These steps ensure the unit shutdown is initiated and proceeds as quickly as safe plant operation permits.**

D. **Represents a condition where corrosion has caused the failure of primary system component(s) vital to safe operation of the plant. These steps ensure the reactor is tripped and the NRC is notified within 1 hour.**

Bank Question: 1118 **Answer: C**

1 Pt. Given the following conditions on Unit 1:

- 100% Power
- Primary chemistry reports to the Control Room that Reactor Coolant is in Action Level 3 for high sulfates.
- AP/46 (Abnormal Primary or Secondary "Chemistry) has been implemented.

Enclosure 1, steps 1 and 2 states: "Check is Action Level 3 – CURRENTLY IN EFFECT" and then states to perform the appropriate Action Level 3 actions.

Which one of the following describes the purpose of these steps?

A. Represents the value, outside of which indicates that long-term system reliability may be affected. These steps ensure letdown flow through the NV demineralizers is increased to maximize cleanup.

B. Represents the value, above which significant damage could be done to the system in the short term, warranting prompt correction of the abnormal condition. These steps ensure a technical evaluation is conducted by station management to determine if the unit should be shutdown.

C. Represents a condition where it is inadvisable to continue to operate the plant. These steps ensure the unit shutdown is initiated and proceeds as quickly as safe plant operation permits.

D. Represents a condition where corrosion ~~has caused the~~ could cause the failure of primary system component(s) vital to safe operation of the plant. These steps ensure the reactor is ~~tripped and the NRC is notified within 1 hour.~~ shutdown immediately and maintained in Mode 3 until the condition is corrected.

Distracter Analysis:. Student needs to realize that action level 3 is the worst of the 3 action levels and that continued plant operation is not allowed.

A. Incorrect:
Plausible: Bases for action level 1

B. Incorrect:
Plausible: Bases for action level 2

C. Correct:

D. Incorrect

Plausible: No action level for this described condition.

LEVEL: RO & SRO

KA: 004 A2.19 (2.8/3.5)

SOURCE: BANK McGuire Requalification Exam Bank

LEVEL OF KNOWLEDGE: Memory

AUTHOR:

LESSON: OP-MC-AP-46

OBJECTIVES: OP-MC-AP-46 Obj. 2

REFERENCES: OP-MC-AP-46 page 7
AP/46 Enclosure 1 page 5

SYSTEM **004 Chemical and Volume Control System**

A2	**Ability to (a) predict the impacts of the following malfunctions or operations on the CVCS; and (b) based on those predictions, use procedures to correct, control, or mitigate the consequences of those malfunctions or operations:** (CFR: 41.5/ 43/5 / 45/3 / 45/5)		
A2.01	RCS pressure allowed to exceed limits	3.8	4.2
A2.02	Loss of PZR level (failure mode)	3.9	4.2
A2.03	Boundary isolation valve leak	3.6	4.2
A2.04	Unplanned gas release	3.7*	4.1
A2.05	RCP seal failures	4.0	4.3
A2.06	Inadvertent boration/dilution	4.2	4.3
A2.07	Isolation of letdown/makeup	3.4	3.7
A2.08	Loss of heat tracing	3.0	3.7
A2.09	High primary and/or secondary activity	3.0	3.9
A2.10	Inadvertent boration/dilution	3.9	4.2
A2.11	Loss of IAS	3.6	4.2
A2.12	CIAS, SIAS	4.1	4.3
A2.13	Low RWST	3.6	3.9
A2.14	Emergency boration	3.8*	3.9
A2.15	High or low PZR level	3.5	3.7
A2.16	T-ave. and T-ref. deviations	3.2	3.6
A2.17	Low PZR pressure	3.4	3.7
A2.18	High VCT level	3.1	3.1
A2.19	High secondary and primary concentrations of chloride, fluoride, sodium and solids	2.8	3.5
A2.20	Shifting demineralizer while divert valve is lined up to VCT	2.7	2.7
A2.21	Excessive letdown flow, pressure, and temperatures on ion exchange resins (also causes)	2.7	2.7
A2.22	Mismatch of letdown and changing flows	3.2	3.1
A2.23	High filter D/P	2.6	2.7
A2.24	Isolation of both letdown filters at one time: down-stream relief lifts	2.8	2.8
A2.25	Uncontrolled boration or dilution	3.8	4.3
A2.26	Low VCT pressure	2.8	3.0
A2.27	Improper RWST boron concentration	3.5	4.2
A2.28	Depressurizing of RCS while it is hot	3.7	4.3
A2.29	Indication by increased letdown flow that demineralizers are bypassed	2.3	2.4
A2.30	Reduction of boron concentration in the letdown flow; its effects on reactor operation	3.3	3.6
A2.31	Potential for RCS chemical contamination when placing CVCS demineralizer in service	2.3	2.7
A2.32	Expected reactivity changes after valving in a new mixed-bed demineralizer that has not been preborated	3.4	3.9

CLASSROOM TIME (Hours)

NLO	NLOR	LPRO	LPSO	LOR
		1.5	1.5	1.5

OBJECTIVES

	OBJECTIVE	NLO	NLOR	LPRO	LPSO	LOR
1	Concerning AP/0/5500/46 (Abnormal Primary or Secondary Chemistry): • State the purpose of the AP • Recognize the symptoms that would require implementation of the AP. AP46001			X	X	X
2	Given scenarios describing accident events and plant conditions, evaluate the basis for any caution, note, or step. AP46002			X	X	X

STEP DESCRIPTION FOR ENCLOSURE 1

ENCLOSURE 1- STEP 1 & 2:

PURPOSE:

Shutdown the unit immediately

DISCUSSION:

Action Level 3 represents the limit beyond which data or engineering judgment indicates that it is inadvisable to continue to operate the plant. An orderly unit shutdown should be initiated immediately, with cooldown to follow as rapidly as plant constraints permit.

Shutdown times are based on SLC 16.5.7, condition B.

Following a unit shutdown caused by entering an Action Level 3 condition, a technical review of the incident should be performed and appropriate long-term and short-term corrective measures taken before the unit is restarted.

If chemistry has improved to within the requirements of Action Level 3 prior to plant shutdown, power operation may continue, subject to the restrictions of SLC 16.5.7 and other action levels.

REFERENCES:
SLC 16.5.7
EPRI, TR-105714 (PWR Primary Water Chemistry Guidelines)
McGuire Chemistry Manual MCM 3.1

ENCLOSURE 1- STEP 3:

PURPOSE:

Flowpath controlling step

DISCUSSION:

This step kicks around Action Level 1 and 2 with the unit currently in Action Level 3.

ENCLOSURE 1- STEP 4:

PURPOSE:

Determine if unit shutdown should continue once conditions improve below Action Level 3.
DISCUSSION:

ACTION/EXPECTED RESPONSE	RESPONSE NOT OBTAINED

__ 1. **Check Action Level 3 - CURRENTLY IN EFFECT.**

__ **GO TO Step 5.**

2. **Perform the following Action Level 3 requirements:**

NOTE
- If multiple parameters are in Action Level 3, the most restrictive shutdown requirements in the following steps shall be followed.
- The following parameters may be considered "normal" unless known to be in Action Level 3.

a. Check the following parameters - NORMAL:

__ • Fluoride

__ • Chloride.

a. Perform the following:

__ 1) Shutdown to Mode 3 within 6 hours of exceeding Action Level 3 limit.

__ 2) Shutdown to Mode 5 within 36 hours of exceeding Action Level 3 limit.

__ b. Check Sulfate - NORMAL.

b. Perform the following:

__ 1) Shutdown to Mode 3 within 6 hours of exceeding Action Level 3 limit.

__ 2) Cooldown unit to less than 250°F within 36 hours of exceeding Action Level 3 limit.

Question 2 AP46006 AP46006
1 Pt

Unit 1 was operating at 100% power when the following occurred:

- Primary Chemistry reports to the Control Room that NC System is in Action Level 3 for high sulfates.
- AP/1/A/5500/46 (Abnormal Primary or Secondary Chemistry) has been implemented.

Enclosure 1, Abnormal Primary Chemistry, steps 1 and 2 states: "Check if Action Level 3 - CURRENTLY IN EFFECT" and then states to perform the appropriate Action Level 3 actions. What is the purpose of these steps?

A. Action Level 3 represents the value, outside of which indicates that long-term system reliability may be affected. These steps ensure letdown flow through the NV demineralizers is increased to maximize cleanup.

B. Action Level 3 represents the value, above which significant damage could be done to the system in the short term, warranting prompt correction of the abnormal condition. These steps ensure a technical evaluation is conducted by station management to determine if the unit should be shutdown.

C. Action Level 3 represents a condition where it is inadvisable to continue to operate the plant. These steps ensure the unit shutdown is initiated and proceeds as quickly as safe plant operation permits.

D. Action Level 3 represents a condition where corrosion has caused the failure of primary system component(s) vital to safe operation of the plant. These steps ensure the reactor is tripped and the NRC is notified within 1 hour.

Answer 2

C

1 Pt. Given the following conditions on Unit 1:

- 1A ND is in RHR mode cooling
- NC System is 110°F, 335 PSIG
- PZR is solid

Which one of the following will cause a large increase in reactor coolant pressure?

Consider each failure independently

A. 1ND-29 (1A ND Hx outlet) fails open

B. 1KC-57 (1A ND Hx control) fails open

C. 1NV-121 (ND letdown control) fails closed

D. 1NV-238 (charging line flow control) fails closed

Bank Question: 1119 **Answer: C**

1 Pt. Given the following conditions on Unit 2:

- 1A ND is in RHR mode cooling
- NC System is 110°F, 335 PSIG
- PZR is solid

Which one of the following will cause a large increase in reactor coolant pressure?

Consider each failure independently

A. 2ND-29 (1A ND Hx outlet) fails open

B. 2KC-57 (1A ND Hx control) fails open

C. 2NV-121 (ND letdown control) fails closed

D. 2NV-238 (charging line flow control) fails closed

Distracter Analysis:. 1NV-121 failing closed upsets the charging and letdown balance. Now the system will have no letdown and whatever charging was previously going into the system. This will cause pressure to increase.

A. **Incorrect:**
Plausible:

B. **Incorrect:**
Plausible:

C. **Correct:**

D. **Incorrect**
Plausible:

LEVEL: RO & SRO

KA: 005 K5.05 (2.7*/3.1*)

SOURCE: NEW

LEVEL OF KNOWLEDGE: Comprehension

AUTHOR: CWS

LESSON: OP-MC-PS-NC

OBJECTIVES: OP-MC-PS-NC, obj 23

REFERENCES: OP/2/A/6100/SD-8 Enclosure 4.1 page 4-

SYSTEM: **005 Residual Heat Removal System (RHRS)**

K5	**Knowledge of the operational implications of the following concepts as they apply the RHRS:** (CFR: 41.5 / 45.7)		
K5.01	Nil ductility transition temperature (brittle fracture)	2.6	2.9
K5.02	Need for adequate subcooling	3.4	3.5
K5.03	Reactivity effects of RHR fill water	2.9*	3.1*
K5 04	Calculation of heat load on the RHR heat exchanger	2.1	2.3*
K5 05	Plant response during "solid plant": pressure change due to the relative incompressibility of water	2.7*	3.1*
K5.06	Special concerns regarding the use of water chemistry	1.9*	2.6*
K5.07	Relationship between PZR level, VCT level, and charging flow	2.2	2.4*
K5.08	PTS	2.4*	2.5*
K5.09	Dilution and boration considerations	3.2	3.4
K6	**Knowledge of the effect of a loss or malfunction on the following will have on the RHRS:** (CFR: 41.7 / 45.7)		
K6.01	RHR pump performance characteristics	2.4	2.6
K6.02	"Packless" valves	1.8*	1.9*
K6.03	RHR heat exchanger	2.5	2.6
K6.04	Valves	1.9	2.1
K6.05	Pumps	1.9	2.1
K6.06	Motors	1.8	1.8
K6.07	Sensors and detectors	2.1	2.3
K6.08	Controllers and positioners	2.2	2.4
K6.09	Demineralizers and ion exchangers	1.6	1.9
K6.10	Breakers, relays, and disconnects	1.7	1.8
K6.11	RHR heat exchanger and outlet flow control	2.3	2.7*
	ABILITY		
A1	**Ability to predict and/or monitor changes in parameters (to prevent exceeding design limits) associated with operating the RHRS controls including:** (CFR: 41.5 / 45.5)		
A1.01	Heatup/cooldown rates	3.5	3.6
A1.02	RHR flow rate	3.3	3.4
A1.03	Closed cooling water flow rate and temperature	2.5	2.6
A1.04	Relationship between RWST level and level in the spent fuel pool	2.1*	2.3
A1.05	Detection of and response to presence of water in RHR emergency sump	3.3*	3.3*
A1.06	Relationship (dependence) of time available to perform system isolation surveillance test to time for decay heat to reach high limit	2.7	3.1*
A1.07	Determination of test acceptability by comparison of recorded valve response times with Tech-Spec requirements	2.5	3.1*

OBJECTIVES

	OBJECTIVE	NLO	NLOR	LPRO	LPSO	LOR
20	Describe how NCS temperature, pressure, flow and Pzr level are measured and indicated.		X	X	X	
21	Describe the operation and indication readout of the following NCS level instrumentation: • Ultrasonic level detection • WR level • NR level • Sightglass		X	X	X	X
22	State the nominal values for NC System pressure, Th, Tc, Tave, Pzr temperature for Hot Zero Power and Hot Full Power.	X	X	X	X	
23	Given a Limit and/or Precaution associated with the NC System, discuss its basis and when it applies.		X	X	X	X
24	Concerning the Technical Specifications related to the NC System: • Given the LCO title, state the LCO (including any COLR values) and applicability. • For any LCO's that have action required within one hour, state the action. • Given a set of parameter values or system conditions, determine if any Tech Spec LCO's is(are) not met and any actions(s) required within one hour. • Given a set of parameter values or system conditions and the appropriate Tech Spec, determine required action(s). • Discuss the bases for a given Tech. Spec. LCO or Safety Limit. * SRO ONLY			X X X X	X X X X X	X X X X *

NOTE: **WHEN** 2NCP5380 (PZR Steam Space Temp) and OAC Point M2A0849 (U2 Pressurizer Steam Temp) indicate less than or equal to 400°F with NC System pressure 300 - 310 psig, the PZR is considered water solid.

3.10 Monitor the following:

- ☐ 2NCP5380 (PZR Steam Space Temp)
- ☐ OAC Point M2A0849 (U2 Pressurizer Steam Temp)
- ☐ NC System pressure

_____ 3.11 **HOLD** until PZR is water solid.

_____ 3.12 Notify Primary Chemistry that PZR is water solid.

_____ _____/_____
Person Contacted Date Time

CAUTION: **WHEN** PZR is water solid, large NC System pressure changes result from:
- Small changes in charging/letdown flow.
- Small changes in ND System flow.
- Small changes in ND or KC System temperature.

_____ 3.13 **WHEN** PZR is water solid, adjust charging/letdown flow to maintain 325 - 340 psig NC System pressure.

3.14 Operate Pzr Heaters as follows:

3.14.1 Turn off the following:

_____ • A Pzr Htr Group
_____ • B Pzr Htr Group
_____ • D Pzr Htr Group

☐ 3.14.2 Operate C Pzr Htr Group at greater than 25% output per OP/2/A/6100/003 (Controlling Procedure for Unit Operation) to reduce water stratification while cooling Pzr.

_____ 3.14.3 **WHEN** Pzr has cooled to NC Loop temperature, perform the following:

_____ 3.14.3.1 Adjust Pzr Press Master to obtain zero output for C Pzr Htr Group.

_____ 3.14.3.2 Open "C Pzr Htr Grp Sup Bkr".

1 Pt. Pressurizer Pressure below the P-11 setpoint will allow the blocking of which Engineered Safeguard Feature (ESF) design features?

A. **2/4 Low Pressurizer Pressure Safety Injection**
2/4 Low Steamline Pressure on 1/4 SGs Safety Injection
2/4 on 1/4 SGs Auxiliary Feedwater Pump auto start

B. **2/4 Low Pressurizer Pressure Safety Injection**
2/3 Low Steam Pressure on 1/4 SGs Steamline Isolation
2/4 on 1/4 SGs Auxiliary Feedwater Pump auto start

C. **2/2 Feedwater Isolation**
2/3 Low Steam Pressure on 1/4 SGs Steamline Isolation
2/4 on 2/4 SGs Turbine Driven Auxiliary Feedwater Pump auto start

D. **2/2 Feedwater Isolation**
2/3 Low Pressurizer Pressure Safety Injection
2/3 Low Steamline Pressure Safety Injection

Replace FW isolation with phase A containment isolation

word scramble?

Bank Question: 1120 **Answer: B**

1 Pt. Pressurizer Pressure below the P-11 setpoint will allow the blocking of which Engineered Safeguard Feature (ESF) design features?

A. **2/4 Low Pressurizer Pressure Safety Injection**
2/4 Low Steamline Pressure on 1/4 SGs Safety Injection
2/4 on 1/4 SGs Auxiliary Feedwater Pump auto start

B. **2/4 Low Pressurizer Pressure Safety Injection**
2/3 Low Steam Pressure on 1/4 SGs Steamline Isolation
2/4 on 1/4 SGs Auxiliary Feedwater Pump auto start

C. **2/2 Feedwater Isolation**
2/3 Low Steam Pressure on 1/4 SGs Steamline Isolation
2/4 on 2/4 SGs Turbine Driven Auxiliary Feedwater Pump auto start

D. **2/2 Feedwater Isolation**
2/3 Low Pressurizer Pressure Safety Injection
2/3 Low Steamline Pressure Safety Injection

Distracter Analysis:.

A. **Incorrect**:
Plausible:

B. **Correct**:
Plausible:

C. **Incorrect**:
Plausible:

D. **Incorrect**
Plausible:

LEVEL: RO & SRO

KA: 006 K4.21 (4.1/4.3)

SOURCE: NEW

LEVEL OF KNOWLEDGE: Memory

AUTHOR: CWS

LESSON: OP-MC-ECC-ISE

OBJECTIVES: OP-MC-ECC-ISE Obj. 10

REFERENCES: OP-MC-ECC-ISE pages 23, 25 and 57
OP-MC-CF-CA, page 75

SYSTEM:	**006 Emergency Core Cooling System (ECCS)**		
K2	**Knowledge of bus power supplies to the following:** (CFR: 41.7)		
K2.01	ECCS pumps	3.6	3.9
K2.02	Valve operators for accumulators	2.5*	2.9
K2.03	Heat tracing	2.3	2.5
K2.04	ESFAS-operated valves	3.6	3.8
K3	**Knowledge of the effect that a loss or malfunction of the ECCS will have on the following:** (CFR: 41.7 / 45.6)		
K3.01	RCS	4.1*	4.2
K3.02	Fuel	4.3	4.4
K3.03	Containment	4.2	4.4
K4	**Knowledge of ECCS design feature(s) and/or interlock(s) which provide for the following:** (CFR: 41.7)		
K4.01	Cooling of centrifugal pump bearings	2.6	2.9
K4.02	Relieving shutoff head (recirculation)	2.8	3.0
K4.03	Flushing of piping following transfer of highly concentrated boric acid	2.4	2.5
K4.04	System venting	2.3	2.5
K4.05	Autostart of HPI/LPI/SIP.	4.3	4.4
K4.06	Recirculation of minimum flow through pumps	2.7	3.1
K4.07	Normal water supply for SIS	3.4	3.8
K4 08	Recirculation flowpath of reactor building sump	3.4*	3.6*
K4.09	Valve positioning on safety injection signal	3.9	4.2
K4.10	Redundant pressure meters	3.3	3.6
K4.11	Reset of SIS	3.9	4.2
K4.12	HPI flow throttling	4.1*	4.3*
K4.13	Reset of containment isolation	3.8	4.1
K4.14	Cross-Connection of HPI/LPI/SIP	3.9	4.2
K4.15	RHR pump test flow path	2.4	2.6
K4.16	Interlocks between RHR valves and RCS	3.2	3.5
K4.17	Safety Injection valve interlocks	3.8	4.1
K4.18	Valves normally isolated from their control power	3.6*	3.7
K4.19	Interlocks to storage tank makeup valve	3.0	3.1
K4.20	Automatic closure of common drain line and fill valves to accumulator	3.2*	3.5*
K4.21	Bypassing/blocking ESF channels	4.1	4.3
K4.22	Interlocks between RCP seal flow rate and standby HPI pump	3.4*	3.7*
K4.23	Demineralized water supply to RWST	2.3*	2.5*
K4.24	Water inventory control	2.6	3.0
K4.25	Concentrated boric acid supply to RWST	2.8	3.2
K4.26	Parallel redundant systems	3.3	3.8
K4.27	Alarm for misalignment of the accumulator isolation valve	2.9	3.4
K4.28	RHR	3.2	3.5
K4.29	BIT recirculation	2.5*	2.9*
K4.30	Containment isolation	3.6	3.9

CLASSROOM TIME (Hours)

NLO	NLOR	LPRO	LPSO	LOR
2.5	1.5	1.5	1.5	1.5

OBJECTIVES

	OBJECTIVE	NLO	NLOR	LPRO	LPSO	LOR
1	State the purpose of the Engineered Safeguards System.	X	X	X	X	
2	Explain the need and reasoning behind the redundancy requirements for two trains of safety related systems.	X	X	X	X	
3	State how the operator would be aware if more than one protection cabinet door was opened simultaneously.		X	X	X	X
4	Define the following terms: S_S, S_t, S_P, S_H	X		X	X	
5	List the conditions that will initiate the following: • Safety Injection (S_S) • Phase "A" Isolation (S_t) • Containment Spray/Phase "B" Isolation (S_P) • Containment Ventilation Isolation (S_H) • Main Steam Isolation (MSI) • Main Feedwater Isolation (FWI) • VE (Annulus Ventilation) System Start • H_2 Skimmer and Air Return Fan Start (VX)	X				
6	List all Safety Injection (S_S) actuation signals, setpoints, logic, and the type of accident each signal provides protection for.		X	X	X	X
7	List the pumps that automatically start following a safety injection actuation.		X	X	X	X
8	State which Safety Injection (S_S) signal can be blocked.	X	X	X	X	X
9	Explain the reason for blocking a Safety Injection (S_S) signal.	X	X	X	X	X
10	List the interlock and parameter setpoint that allows blocking Safety Injection (S_S).		X	X	X	X
11	Describe the operator action needed to block Safety Injection.		X	X	X	X
12	List the conditions that allow RESET of Safety Injection.		X	X	X	X

- Sends open signal to normally open cold leg accumulator isolation valves
- Provides Containment Isolation Phase 'A' (S_t)
- Starts ESS AHU's for ND, NS, and KF pumps
- Provides Main Feedwater (CF) Isolation
- Provides Containment Ventilation Isolation (S_H)
- Turbine Trip

Objective # 8 & 9

The Low Pressurizer Pressure Safety Injection signal can be manually blocked to allow cooldown and depressurization of the plant without causing a safety injection actuation.

Objective # 10

In order to block the Low Pressurizer Pressure Safety Injection signal, "2 of 3" pressurizer pressure channels must be less than 1955 psig (P-11). There are two BLOCK pushbuttons on the Control Board provided (1 for each train).

Objective # 11

Once the (P-11) permissive is satisfied, BOTH BLOCK pushbuttons must be depressed in order to prevent the actuation from occurring when the respective setpoint is reached. This actuation BLOCK signal will be automatically unblocked if pressurizer pressure increases above 1955 psig (P-11).

Objective # 12

Each train has a Safety Injection Reset pushbutton on the Control Board. In order to reset safety injection, one minute must have passed since the actuation (60 second timer has timed out) and the train related reactor trip breaker must be open (P-4). Following safety injection reset, only manual safety injection actuation is available. To reinstate the automatic actuation the reactor trip breakers must be reclosed.

NOTE: **Resetting the Safety Injection (S_S) signal will not cause any equipment to stop or any valves to realign.**

Blocking of automatic safety actuations (OMP 4-3, Use of Abnormal and Emergency Procedures).

It is the policy of Operations not to block any automatic safety actuation from performing their intended function. The RO or SRO has the option of violating this policy if, in his/her judgment, plant conditions require it to be done. Blocking an automatic safety actuation should only be done to better protect the health and safety of the public or to protect the lives of plant personnel. Non-procedural blocking of automatic safety actuations must be approved, prior to taking the action, by two licensed personnel, one of whom is a supervisor who holds a SRO license.

When an automatic safety actuation is blocked outside of procedure, the action may be required to be reported to the NRC under the Provisions of 10CFR50.54X.

In the event that an RO/SRO blocks an automatic actuation of a safety system, it is his/her responsibility to be fully aware of all associated plant parameters, and to manually actuate safety equipment as necessary to assure safe plant conditions.

The following is a list of automatic signals that can be "blocked" from the Main Control Board.

- Feedwater Isolation on Reactor Trip and Low T-avg.
- Pressurizer Low Pressure SI (below P-11).
- CA Auto Start on Lo-Lo S/G Level or both CF Pumps tripped (below P-11).
- Source Range High Flux Reactor Trip.
- Intermediate Range High Flux Lo Setpoint Reactor Trip.
- Power Range High Flux Lo Setpoint Reactor Trip.
- S_t Interlock Bypass on NC Sample Valves: NM-22, NM-25, NM-26.

These signals should not be "blocked" except under the direction of an approved station procedure or to better protect the health and safety of the public or to protect the lives of plant personnel.

7.6 Main Steam Pressure Logic (10/5/99)

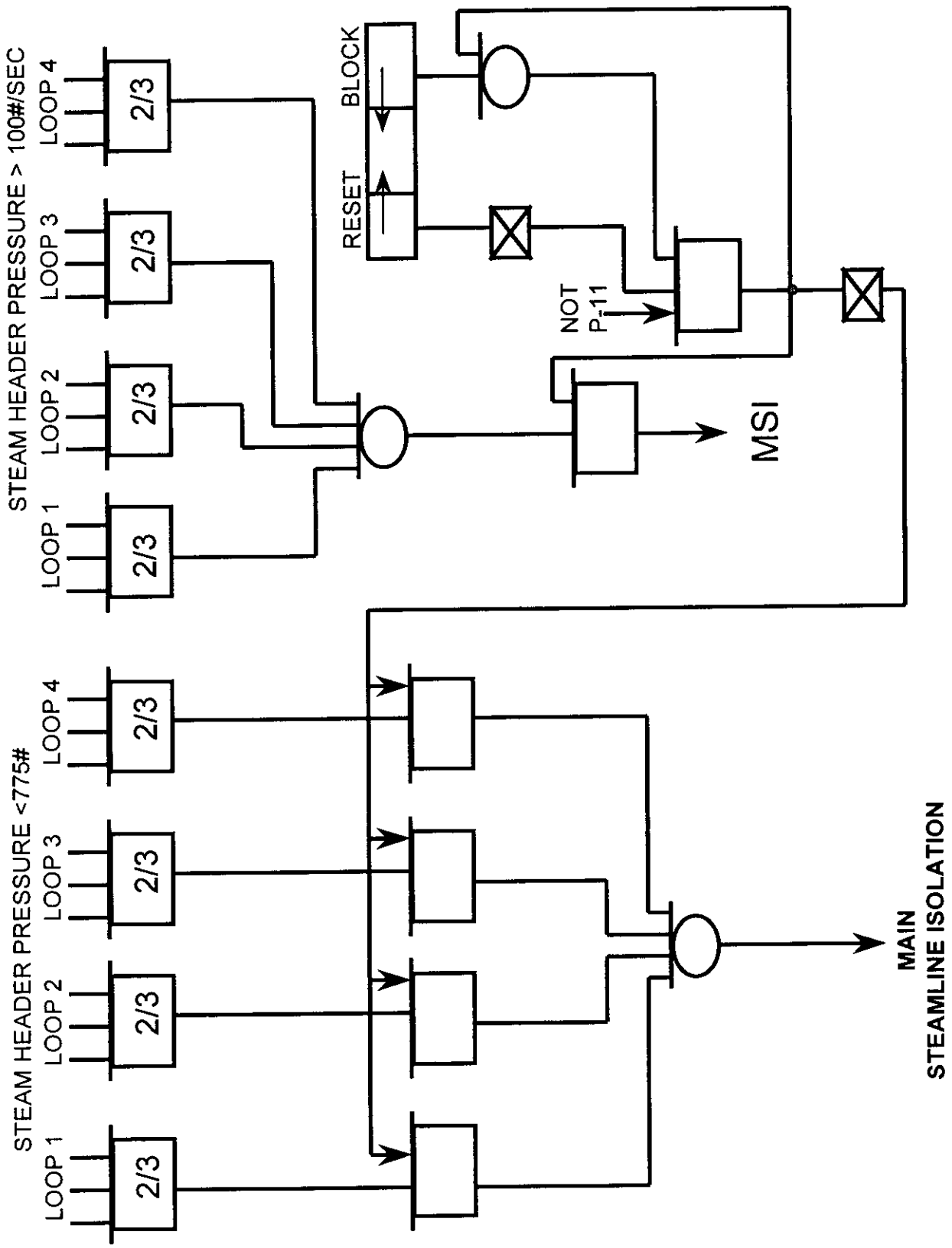

7.12 CA Pump Auto Start Logic (9/29/97)

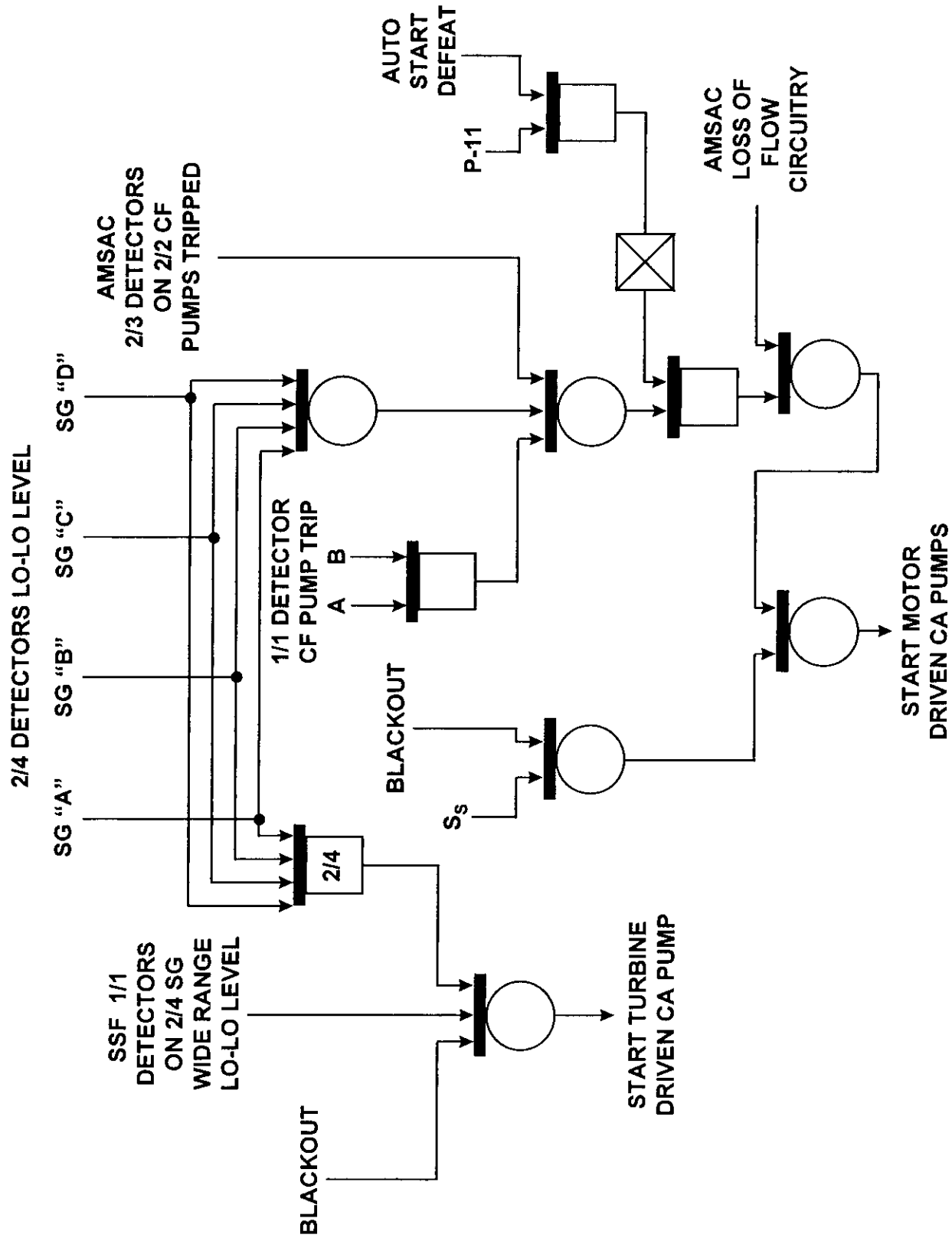

1 Pt.

Unit 2 is starting up following a refueling outage. Procedure OP/2/A/6100/SU-8 (Heatup to 200 °F) is in progress. OP/2/A/6100/SU-6 (Venting the NC System) is complete.

Which one of the following describes how non-condensable gases are removed from the reactor coolant system prior to forming a bubble in the pressurizer?

A. Cycle Pressurizer PORV 2NC-34A

B. Notify Primary Chemistry to add Hydrazine

C. Cycle the reactor vessel head vents

~~**D. Perform 20 second run of a reactor coolant pump**~~

Vent VCT periodically

Bank Question: 1121 **Answer: C**

1 Pt. Unit 2 is starting up following a refueling outage. OP/2/A/6100/SU-6 (Venting the NC System) is complete. Procedure OP/2/A/6100/SU-8 (Heatup to 200 °F) is in progress.

Which one of the following describes how non-condensable gases are removed from the reactor coolant system prior to forming a bubble in the pressurizer?

A. Cycle Pressurizer PORV 2NC-34A

B. Notify Primary Chemistry to add Hydrazine

C. Cycle the reactor vessel head vents

D. Perform 20 second run of a reactor coolant pump

Distracter Analysis:. There is no tie between the pressurizer and the PRT when forming a bubble at McGuire. The Pzr is taken water solid first with non-condensables removed via the PORV's, then heated to saturation while water solid. After SU-8 is entered with the Pzr water solid, non-condensible gasses are removed from the Reactor Coolant System via the Rx Head Vents. Then letdown flow is increased to "draw" the bubble.

A. Incorrect:
Plausible:
B. Incorrect:
Plausible:
C. Correct:
D. Incorrect
Plausible:

LEVEL: RO & SRO

KA: 007 K5.02 (3.1/3.4)

SOURCE: NEW

LEVEL OF KNOWLEDGE: Memory

AUTHOR: CWS

LESSON: OP-MC-PS-NC

OBJECTIVES: OP-MC-PS-NC Obj. 4

REFERENCES: OP/2/A/ 6100/SU-8 page 3

SYSTEM:	**007 Pressurizer Relief Tank/Quench Tank System (PRTS)**		
K5	**Knowledge of the operational implications of the following concepts as the apply to PRTS:** (CFR: 41.5 / 45.7)		
K5.01	Principles of steam quenching	2.2	2.6
K5.02	Method of forming a steam bubble in the PZR	3.1	3.4
K5.03	Characteristics of convection heat transfer	1.8	2.1
K5.04	Properties of noncondensable gases in contact with water	1.9	2.2
K5.05	Characteristics of conduction heat transfer	1.8	2.1
K5.06	Properties of condensable gases in contact with water	1.9	2.2
K6	**Knowledge of the effect of a loss or malfunction on the following will have on the PRTS:** (CFR: 41.7 / 45.7)		
K6.01	Valves	1.9	2.0
K6.02	Sensors and detectors	1.8	1.9
K6.03	Pumps	1.4*	1.7*
K6.04	Motors	1.3*	1.6*
K6.05	Breakers, relays, and disconnects	1.6	1.8
	ABILITY		
A1	**Ability to predict and/or monitor changes in parameters (to prevent exceeding design limits) associated with operating the PRTS controls including:** (CFR: 41.5 / 45.5)		
A1.01	Maintaining quench tank water level within limits	2.9	3.1
A1.02	Maintaining quench tank pressure	2.7	2.9
A1.03	Monitoring quench tank temperature	2.6	2.7
A2	**Ability to (a) predict the impacts of the following malfunctions or operations on the P S; and (b) based on those predictions, use procedures to correct, control, or mitigate the consequences of those malfunctions or operations:** (CFR: 41.5 / 43.5 / 45.3 / 45.13)		
A2.01	Stuck-open PORV or code safety	3.9	4.2
A2.02	Abnormal pressure in the PRT	2.6	3.2
A2.03	Overpressurization of the PZR	3.6	3.9
A2.04	Overpressurization of the waste gas vent header	2.5	2.9
A2.05	Exceeding PRT high-pressure limits	3.2	3.6
A2.06	Bubble formation in PZR	2.6	2.8
A2.07	Recirculating quench tank	2.3*	2.6*
A3	**Ability to monitor automatic operation of the PRTS, including:** (CFR: 41.7 / 45.5)		
A3.01	Components which discharge to the PRT	2.7*	2.9

CLASSROOM TIME (Hours)

NLO	NLOR	LPRO	LPSO	LOR
3	4	5	5	3

OBJECTIVES

	OBJECTIVE	NLO	NLOR	LPRO	LPSO	LOR
1	State the purpose of the Reactor Coolant System.	X	X	X	X	
2	Describe the flow path in the Reactor Coolant System with all NC Pumps running and with less than all pumps running.		X	X	X	
3	Describe the indications which would be used to detect a reactor vessel head O-ring leak and how this line can be isolated.		X	X	X	X
4	Concerning the manual and remote reactor vessel head vents: • state their purpose including when each would be used • state how the vents are operated		X X	X X	X X	 X
5	Sketch the Reactor Coolant System and include all penetrations and instrumentation associated with system operation and control per Drawing 7.5.	X	X	X	X	
6	State the purpose of the pressurizer.	X	X	X	X	
7	Describe how the inherent characteristics of the pressurizer reduces the effects of pressure transients.	X	X	X	X	
8	Explain why the surge line is connected to the NC hot leg and why the spray line is connected to the NC cold leg.	X	X	X	X	
9	State the purpose of maintaining a constant spray flow to the pressurizer.	X	X	X	X	
10	State how Pzr spray flow will be effected if only A or B NCP is operating.	X	X	X	X	
11	State the purpose of providing the capability of auxiliary spray flow to the pressurizer.	X	X	X	X	

NOTE: Non-condensible gases will continue to collect in Reactor Vessel Head for several hours.

3.3 Periodically open the following to remove non-condensible gases from Reactor Vessel Head:

_____ • 2NC-272A,C (Trn 2A Head Vent to PRT Isol)
_____ • 2NC-273A,C (Trn 2A Head Vent to PRT Isol)
_____ • 2NC-274B (Trn 2B Head Vent to PRT Isol)
_____ • 2NC-275B (Trn 2B Head Vent to PRT Isol)

_____ 3.3.1 **WHEN** visible increase in PRT level observed without appreciable increase in PRT pressure, close:

_____ • 2NC-272A,C (Trn 2A Head Vent to PRT Isol)
_____ • 2NC-273A,C (Trn 2A Head Vent to PRT Isol)
_____ • 2NC-274B (Trn 2B Head Vent to PRT Isol)
_____ • 2NC-275B (Trn 2B Head Vent to PRT Isol)

_____ 3.4 **WHEN** opening Reactor Head Vent Solenoid Valves no longer effective in removing non-condensible gases from Reactor Vessel Head, perform the following:

_____ 3.4.1 Close 2NC-51 (PRT Vent).

_____ 3.4.2 Remove temporary filter unit from 2NC-51.

_____ 3.4.3 Install pipe cap on 2NC-51.

_____ 3.5 Notify Primary Chemistry to check Pzr Oxygen concentration less than 100 ppb.

_____ _____/_____
Person Contacted Date Time

_____ 3.6 **IF** Pzr Oxygen Concentration is greater than 100 ppb **AND** additional hydrazine is needed in the Pzr, perform the following:

_____ 3.6.1 Open 2NV-21A (NV Spray to Pzr Isol).

3.6.2 Ensure closed:

_____ • 2NV-13B (NV Supply to A NC Loop Isol)
_____ • 2NV-16A (NV Supply to D NC Loop Isol)
_____ • 2NC-27 (A Loop Pzr Spray Control)
_____ • 2NC-29 (B Loop Pzr Spray Control)

1 Pt. Abnormal Pressurizer Relief Tank conditions would indicate a primary system leak at which of the following locations?

A. 1NV- 6 (Letdown Line Relief)

B. Reactor Coolant Pump Number 2 Seal failure

C. Reactor vessel O-ring leak off

D. Seat failure on reactor coolant system loop drains

Bank Question: 1122 **Answer: A**

1 Pt. Abnormal Pressurizer Relief Tank conditions would indicate a primary system leak at which of the following locations?

A. 1NV- 6 (Letdown Line Relief)

B. Reactor Coolant Pump Number 2 Seal failure

C. Reactor vessel O-ring leak off

D. Seat failure on a reactor coolant system loop drain

Distracter Analysis:. 1NV-6 leaking is an AP/10 (NC System Leakage Within the Capacity of both NV Pumps) entry condition. Although the other leak locations may be require entry into AP/10, they discharge to the NCDT. Only 1NV-6 would result in abnormal PRT conditions.

A. Correct:
B. Incorrect:
Plausible:
C. Incorrect:
Plausible:
D. Incorrect
Plausible:

LEVEL: RO & SRO

KA: 007 G2.4.4 (4.0/4.3)

SOURCE: NEW

LEVEL OF KNOWLEDGE: Memory

AUTHOR: CWS

LESSON: OP-MC-PS-NV

OBJECTIVES: OP-MC-PS-NV, obj 2

REFERENCES: OP-MC-PS-NV, page 119
OP/1/A/6100/010 H, pages 43 & 44

2.4 Emergency Procedures /Plan

2.4.1 **Knowledge of EOP entry conditions and immediate action steps.**
(CFR: 41.10 / 43.5 / 45.13)
IMPORTANCE RO 4.3 SRO 4.6

2.4.2 **Knowledge of system set points, interlocks and automatic actions associated with EOP entry conditions.**
(CFR: 41.7 / 45.7 / 45.8)
Note: The issue of setpoints and automatic safety features is not specifically covered in the systems sections).
IMPORTANCE RO 3.9 SRO 4.1

2.4.3 **Ability to identify post-accident instrumentation.**
(CFR: 41.6 / 45.4)
IMPORTANCE RO 3.5 SRO 3.8

2.4.4 **Ability to recognize abnormal indications for system operating parameters which are entry-level conditions for emergency and abnormal operating procedures.**
(CFR 41.10 / 43.2 / 45.6)
IMPORTANCE RO 4.0 SRO 4.3

2.4.5 **Knowledge of the organization of the operating procedures network for normal, abnormal, and emergency evolutions.**
(CFR: 41.10 / 43.5 / 45.13)
IMPORTANCE RO 2.9 SRO 3.6

2.4.6 **Knowledge symptom based EOP mitigation strategies.**
(CFR: 41.10 / 43.5 / 45.13)
IMPORTANCE RO 3.1 SRO 4.0

2.4.7 **Knowledge of event based EOP mitigation strategies.**
(CFR: 41.10 / 43.5 / 45.13)
IMPORTANCE RO 3.1 SRO 3.8

2.4.8 **Knowledge of how the event-based emergency/abnormal operating procedures are used in conjunction with the symptom-based EOPs.**
(CFR: 41.10 / 43.5 / 45.13)
IMPORTANCE RO 3.0 SRO 3.7

Nomenclature: **LETDN RELIEF HI TEMP** Window: **I4**

Setpoint: 20°F above ambient

Origin: Temperature sensor (1NCTT-5980) monitoring downstream side of 1NV-6 (Letdown Relief Valve)

Probable Cause:
- 1NV-6 (Letdown Relief Valve) has opened or is leaking by
- Instrument malfunction

Automatic Action: None

Immediate Action: Monitor letdown pressure and correct if necessary.

> **NOTE:** **IF** PRT level is increasing, 1NV-6 (Letdown Relief Valve) is probably leaking.

Supplementary Action:

1. Monitor VCT and PRT.
2. **IF** determined 1NV-6 (Letdown Line Safety Relief) leaking, perform the following:
   - A. Place 1NV-124 (Letdown Pressure Control) in "MAN".
   - B. Adjust 1NV-124 (Letdown Pressure Control) as required to establish 250 psig letdown pressure.
   - C. **IF** determined 1NV-6 (Letdown Line Safety Relief) still leaking, perform the following:
     1. Ensure "Regen Hx L/D Temp" less than 340°F.
     2. Adjust 1NV-124 (Letdown Pressure Control) as required to establish 150 - 250 psig letdown pressure.
   - D. Ensure 1NV-124 (Letdown Pressure Control) potentiometer set to control at desired pressure.
   - E. Place 1NV-124 (Letdown Pressure Control) in "AUTO".

Continue On Next Page

3. Refer to AP/1/A/5500/010 (NC System Leakage Within Capacity Of Both NV Pumps)

4. Refer to SLC for leakage specifications.

5. **IF** instrument failure, notify WCC SRO.

References:
- SLC
- MCFD-1554-1.2
- MCFD-1553-2.0
- NSM MG-1-2126

End Of Response

Unit 1

CLASSROOM TIME (Hours)

NLO	NLOR	LPRO	LPSO	LOR
3.0	3.0	3.0	3.0	2.5

OBJECTIVES

SEQ	OBJECTIVE	NLO	NLOR	LPRO	LPSO	LOR
1	Explain the purpose of the NV System.	X	X	X	X	
2	Sketch the NV System to reflect the normal letdown and charging flowpath as well as seal injection and VCT makeup operations per PS-NV-7.1.	X	X	X	X	
3	Sketch the NV System flow balance to include normal flow values. (PS-NV-7.2)		X	X	X	
4	Explain the purpose of the following NV System components: • Regenerative Heat Exchanger • Letdown Orifices • Letdown Heat Exchanger • Reactor Coolant Filters • Mixed Bed Demineralizers • Cation Bed Demineralizers • Volume Control Tank • Charging Pumps and PD Pump Suction dampener	X	X	X	X	

7.0 DRAWINGS

7.1 NV System Composite (1/28/03)

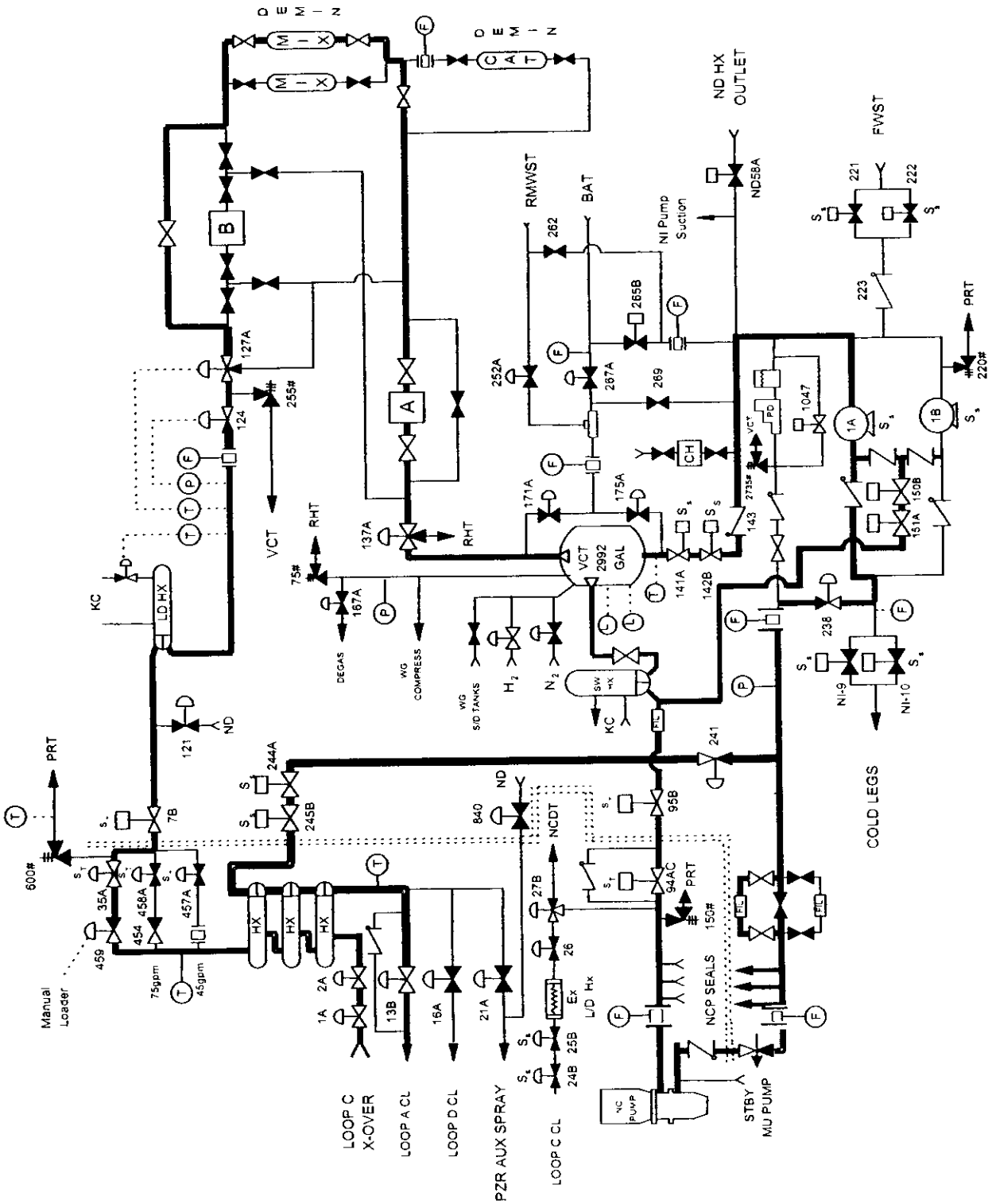

1 Pt. The OAC Alarm Summary screen comes into alarm due to the following point:

"U1 KC PUMPS B DISCHARGE HEADER PRESSURE" at 59 PSIG.

Which one of the following describes the significance of this alarm?

A. High flow, pump runout

B. High flow, heat exchanger tube vibration

C. Low flow, pump cavitation

D. Low flow, loss of mini-flow protection

Bank Question: 1123 **Answer: A**

1 Pt. The OAC Alarm Summary screen comes into alarm due to the following point:

"U1 KC PUMPS B DISCHARGE HEADER PRESSURE" at 59 PSIG.

Which one of the following describes the significance of this alarm?

A. High flow, pump runout

B. High flow, heat exchanger tube vibration

C. Low flow, pump cavitation

D. Low flow, loss of mini-flow protection

Distracter Analysis:. Correct answer based on the student knowing that 60 psig is a low pressure, high flow condition.

A. **Correct**:
B. **Incorrect**:
Plausible: Heat exchanger vibration is a concern on the RN side.
C. **Incorrect**: Not low flow
Plausible: If student thought low flow, cavitation would be a concern.
D. **Incorrect** Not low flow
Plausible: . If student thought that low flow was caused by loss of mini-flow protection.

LEVEL: RO & SRO

KA: ~~007 G2.4.4 (4.0/4.3)~~ 005 A1.03

SOURCE: NEW

LEVEL OF KNOWLEDGE: Memory

AUTHOR: CWS

LESSON: OP-MC-PSS-KC

OBJECTIVES: OP-MC-PSS-KC, obj 10

REFERENCES: OP-MC-PSS-KC, pages 13 & 25

SYSTEM:	**008 Component Cooling Water System (CCWS)**		
K6	**Knowledge of the effect of a loss or malfunction on the following will have on the CCW:** (CFR: 41.7 / 45.7)		
K6.01	Valves	1.9	2.1
K6.02	Sensors and detectors	1.9	2.0
K6.03	Controllers and positioners	1.8	2.0
K6.04	Pumps	2.1	2.3*
K6.05	Motors	1.7	1.8
K6.06	Heat exchangers and condensers	2.1*	2.4*
K6.07	Breakers, relays, and disconnects	1.8	2.1
	ABILITY		
A1	**Ability to predict and/or monitor changes in parameters (to prevent exceeding design limits) associated with operating the CCWS controls including:** (CFR: 41.5 / 45.5)		
A1.01	CCW flow rate	2.8	2.9
A1.02	CCW temperature	2.9	3.1
A1.03	CCW pressure	2.7	2.9
~~A1.04~~	~~Surge tank level~~	3.1	3.2
A2	**Ability to (a) predict the impacts of the following malfunctions or operations on the CCWS, and (b) based on those predictions, use procedures to correct, control, or mitigate the consequences of those malfunctions or operations:** (CFR: 41.5 / 43.5 / 45.3 / 45.13)		
A2.01	Loss of CCW pump	3.3	3.6
A2.02	High/low surge tank level	3.2	3.5
A2.03	High/low CCW temperature	3.0	3.2
A2.04	PRMS alarm	3.3	3.5*
A2.05	Effect of loss of instrument and control air on the position of the CCW valves that are air operated	3.3*	3.5
A2.06	Calculation of required recirculation time for chemical addition	1.7*	2.0*
A2.07	Consequences of high or low CCW flow rate and temperature; the flow rate at which the CCW standby pump will start	2.5*	2.8*
A2.08	Effects of shutting (automatically or otherwise) the isolation valves of the letdown cooler	2.5	2.7*
A2.09	Results of excessive exit temperature from the letdown cooler, including the temperature effects on ion-exchange resins	2.3	2.8

OBJECTIVES

10	Concerning the Component Cooling Water System: • Describe the local controls and list the indications, including operation of the local control for KC-122. • Describe the control room controls and list the indications.	X 	X X	X X	X X	 X
11	State the normal and backup sources of makeup water to the system.	X	X	X	X	
12	Describe the discharge paths of the Component Cooling Water Drain Tank Pump.	X	X	X	X	
13	Given a limit and/or precaution associated with an Operating Procedure, discuss it's basis and applicability.		X	X	X	X
14	Concerning AP/1/A/5500/21, Loss of Component Cooling Water: • State the purpose of the AP. • Recognize the symptoms that would require implementation of the AP.			X	X	X
15	Concerning the Technical Specifications related to the Component Cooling Water System: • Given the LCO title, state the LCO (including any COLR values) and applicability. • For any LCO's that have action required within one hour, state the action. • Given a set of parameter values or system conditions, determine if any Tech Spec LCO's is (are) not met and any action(s) required within one hour. • Given a set of plant parameters or system conditions and the appropriate Tech Specs, determine required actions. • Discuss the bases for a given Tech Spec LCO or Safety Limit.			 X X X 	 X X X X X	 X X X X *

* - SRO ONLY

Reactor Building Header

- **Reactor Vessel Support Coolers (isolation valves closed)**
- **Reactor Coolant Pump Motor Upper and Lower Bearing Oil Coolers**
- **Reactor Coolant Pump Thermal Barrier Heat Exchangers**
- **Reactor Coolant Drain Tank Heat Exchanger**
- **Excess Letdown Heat Exchanger**

1.2.2. Chemical Treatment of KC System

A major portion of the system is made of carbon steel. A combination of chemicals are added to the system to help minimize corrosion. These chemicals include Sodium Molybdate (corrosion inhibitor), Tolytriazole (TTA) (a copper corrosion inhibitor), and Sodium Tetraborate (Borax) (a pH buffer).

Objective #9

Care must be exercised when handling these chemicals or chemically treated KC water. **Effects of exposure to these chemicals may include eye, skin and respiratory irritation, dermatitis, headache, nausea and coughing.**

1.2.3. KC System radiation levels are monitored by EMF-46A, B. These EMF's sample the discharge of the KC heat exchanger to detect any radioactive leaks into the KC System.

Objective #10

2.0 COMPONENT DESCRIPTION

2.1. Component Cooling Water Pumps (KC Pumps)

The KC Pumps are horizontal shaft, centrifugal pumps equipped with mechanical seals to minimize leakage. They are designed to provide the maximum cooling water requirements for the system. **They can be operated from the Control Room or ASP by two position START/STOP pushbuttons**. Normal operations parameters are as follows:

Pressure ..... 90-100 psig

Flow ..... 2000/pump, Runout = 4300 gpm

Objective #4

Minimum flow is maintained by an automatic recirc valve. Controls for these valves are located in the Control Room. Each valve will open when KC Pump discharge flow decreases to 1000 gpm and closes when flow increases to 1500 gpm. Flowpath is to the KC Surge Tank.

The pumps automatically start on a Safety Injection (S_S) or Blackout (BO) signal.

2.6.19.In 1996, a severe pressure transient occurred on the Unit 1 KC system that caused excessive cycling of several control valves. The valve controlling cooling flow to the 1A NC Pump upper bearing oil cooler eventually closed and would not re-open. This soon led to manual tripping of the reactor and the 1A NC Pump.

The transient occurred during slave relay testing and procedures were promptly revised to prevent recurrence. However, a similar transient could still occur if the inlet isolation to either of the ND HX's were to be opened without a return path to the operating pumps. Operators should ensure that whenever possible, when the RETURN valve from the Aux Building non-essential header is closed, the associated SUPPLY valve to the Aux Building non-essential header should also be closed.

2.7. Component Cooling Water Chemistry Specifications

pH .....9.0 -10.5
Chloride (ppb) .....≤ 500
Fluoride (ppb).....≤ 500
Molybdate (ppm).....500 - 800 ppm
Copper Corrosion Inhibitor (ppm).....10 - 25

3.0 SYSTEM OPERATION

3.1. Normal Operation

Objective #13

3.1.1. Limits and Precautions

KC contains a corrosion inhibitor and shall be processed per Chemistry direction prior to release to environment. (Prevent releasing chemically treated water to the environment.)

It is preferred to drain KC to the KC Drain Tank.

KC water is hazardous to the skin and eyes.

Maximum Discharge Header Flow for one KC pump is 4000 gpm.
(> 4000 gpm can run out one KC pump.)

WHEN a ND pump is running, KC shall be aligned to ND Pump Mechanical Seal HX **OR** ND Pump discharge temperature shall be less than 100°F.

KC Flow to each ND HX in service must be maintained greater than or equal to 2000 gpm when both of the following conditions exist:

- NC System temperature greater than or equal to 200°F
- ND in RHR Mode (2NI-173A or 2NI-178B open)

IF one KC Pump tagged, KC to associated ND HX should be throttled to less than 4000 gpm using HX manual isolation (2KC-52 or 2KC-55). (To prevent KC pump runout)

1 Pt. The required time critical operator action associated with isolating a KC leak states:

"Operator locally initiates makeup within ___ minutes of dispatch using either YM or RN, or gets leak isolated prior to emptying surge tank for design basis leak of ___ gallons per minute".

Which one of the following correctly fills in the blanks of the above statement?

A. 10, 30

B. 10, 50

C. 50, 30

D. 50, 50

Bank Question: 1124 **Answer: B**

JAW AP-21

1 Pt. The required time critical operator action associated with isolating a KC leak states:

"Operator locally initiates makeup within ___ minutes of dispatch using either YM or RN, or gets leak isolated prior to emptying surge tank for design basis leak of ___ gallons per minute".

Which one of the following correctly fills in the blanks of the above statement?

A. 10, 30

B. 10, 50

C. ~~50~~ 30, 30

D. ~~50~~ 30, 50

Distracter Analysis:. Operators are expected to know basis for time critical actions.

A. Incorrect
Plausible:

B. Correct:

C. Incorrect:
Plausible

D. Incorrect
Plausible:

LEVEL: RO & SRO

KA: 008 G2.4.11 (3.4/3.6)

SOURCE: NEW

LEVEL OF KNOWLEDGE: Memory

AUTHOR: CWS

LESSON: OP-MC-AP-21

OBJECTIVES: OP-MC-AP-21, obj 3

REFERENCES: OP-MC-AP-21, pages 9 & 10
Basis Document for Time Critical Actions, page 18

2.4 Emergency Procedures /Plan (Continued)

2.4.9 **Knowledge of low power / shutdown implications in accident (e.g. LOCA or loss of RHR) mitigation strategies.**
(CFR: 41.10 / 43.5 / 45.13)
IMPORTANCE RO 3.3 SRO 3.9

2.4.10 **Knowledge of annunciator response procedures.**
(CFR: 41.10 / 43.5 / 45.13)
IMPORTANCE RO 3.0 SRO 3.1

2.4.11 **Knowledge of abnormal condition procedures.**
(CFR: 41.10 / 43.5 / 45.13)
IMPORTANCE RO 3.4 SRO 3.6

2.4.12 **Knowledge of general operating crew responsibilities during emergency operations.**
(CFR: 41.10 / 45.12)
IMPORTANCE RO 3.4 SRO 3.9

2.4.13 **Knowledge of crew roles and responsibilities during EOP flowchart use.**
(CFR: 41.10 / 45.12)
IMPORTANCE RO 3.3 SRO 3.9

2.4.14 **Knowledge of general guidelines for EOP flowchart use.**
(CFR: 41.10 / 45.13)
IMPORTANCE RO 3.0 SRO 3.9

2.4.15 **Knowledge of communications procedures associated with EOP implementation.**
(CFR: 41.10 / 45.13)
IMPORTANCE RO 3.0 SRO 3.5

2.4.16 **Knowledge of EOP implementation hierarchy and coordination with other support procedures.**
(CFR: 41.10 / 43.5 / 45.13)
IMPORTANCE RO 3.0 SRO 4.0

2.4.17 **Knowledge of EOP terms and definitions.**
(CFR: 41.10 / 45.13)
IMPORTANCE RO 3.1 SRO 3.8

CLASSROOM TIME (Hours)

NLO	NLOR	LPRO	LPSO	LOR
		1.0	1.0	1.0

OBJECTIVES

	OBJECTIVE	NLO	NLOR	LPRO	LPSO	LOR
1	Explain the purpose for AP/21 (Loss of KC or KC System Leakage). AP21001			X	X	X
2	Analyze the mitigating strategy (major actions) contained in the procedure. AP21002			X	X	X
3	Given scenarios describing accident events and plant conditions, evaluate the basis for any caution, note, or step. AP21003			X	X	X
4	Given scenarios describing accident events and plant conditions, evaluate conditions which require application of continuous action steps. AP21004			X	X	X

DISCUSSION:

The YM valves for makeup to the KC surge tanks are local manually operated valves. Since an operator has to be dispatched to do this locally, which may take some time to get to, this step is early in the AP based on its' priority.

The pumps are able to operate with surge tanks empty, but the operator manually provides makeup upon low level indication (first alarm is at 4.5 ft on the OAC). We have made this a 10 minute time critical task to account for: 1) Time to dispatch an operator in AP/21, 2) Time to determine that YM is not adequate and RN makeup may be needed, 3) Ensure margin to prevent reaching 2 ft in surge tank.

At 2ft, AP/21 requires isolating KC aux bldg non-essential header and it would be preferable not to do this if makeup can keep up with the leak.

STEP 12:

PURPOSE:

Get an early start on determining the KC system leak location so that later the appropriate compensatory actions can be taken.

DISCUSSION:

Isolating a KC leak is the only FSAR identified time critical operator task (ref FSAR 9.2.4.3). The surge tank has sufficient capacity (approximately 500 gallons per foot, ref. databook tank curve) to provide a continuous supply of component cooling water for 30 minutes during a leak of 50 gpm. This is sufficient time for operating personnel to isolate the leaking component. The pumps are able to operate with surge tanks empty, but the operator manually provides makeup upon low level indication (first alarm is at 4.5 ft on the OAC, ref. OAC alarm response for pt. M1A0789)

REFERENCES:
FSAR 9.2.4.3
Data book KC Surge Tank curve
OAC alarm response for pt. M1A0789

STEP 13:

PURPOSE:

Check to see if KC drain tank pump is running.

DISCUSSION:

If KCDT pump is continuously running this may be indicative of a possible leak into the KC drain and relief headers. The flow diagram is referenced in the RNO for the operator to go to if leak is suspected.

STEP 14:

PURPOSE:

Align RN makeup to the KC surge tank if YM makeup can't keep up with the leak.

DISCUSSION:

YM makeup is a two-inch line, capable of 100 gpm makeup flow. If this isn't big enough to keep up with the leak, then RN is aligned for makeup through its' four-inch line. RN is a second choice because it's unprocessed water, and doesn't meet KC chemistry requirements. However, having no KC water is **worse** than having water with chemistry out-of-spec.

STEP 15:

PURPOSE:

Procedure flow-path-controlling step. If KC surge tank level is greater than 3 ft, the operator is directed to Steps 16 through 18 to see if makeup can keep up with the leak so that headers don't have to be isolated.

DISCUSSION:

If KC surge tank level is greater than 3 ft, time is given for the operators to attempt to initiate makeup and check results to see if the surge tank level can be maintained. The FSAR design basis leak is 50 gpm. Per engineering (Larry Kunka), YM should be able to keep up with this. For a design basis leak, operators should be able to initiate makeup prior to reaching 2 ft in the surge tanks (assuming makeup is initiated when KC lo level alarms at 4.5 ft). If the trains are cross-tied, allowing leaving the cross-ties open doubles the volume (and time) to initiate makeup. Note that for larger leaks, or if level reaches 2 ft, the cross-ties will be closed to protect the other train. If makeup is initiated and level stabilizes, operator actions are greatly simplified, via Step 19 directing the operator on to Step 39.

STEP 16 NOTES:

PURPOSE:

17. **Initiating makeup to the KC surge tank or isolate KC header leak**

Expectation:
Operator locally initiates makeup within 10 minutes of dispatch using either YM or RN, or gets leak isolated prior to emptying surge tank for design basis leak of 50gpm.

Follow-up planned:
None.

References:
FSAR 9.2.4.3
PIP M98-3618
PIP M99-3778
AP/1/A/5500/21 (Loss of KC or KC System Leakage)

Comments:
The FSAR required time to isolate a KC leak is 30 minutes to prevent emptying KC surge tank for a 50 gpm leak. If makeup can stabilize surge tank level, operation can continue with header in service until individual component can be isolated.

A 10 minute local task to initiate makeup is based on: 1) Time to dispatch an operator in AP/21, and 2) Ensure margin to prevent reaching 2 ft in surge tank (for 50 gpm leak). At 2 ft, AP/21 requires isolating KC aux bldg non-essential header. This action has been validated and times can be met.

18. **Isolate letdown for a letdown header break:**

Expectation:
The FSAR assumes isolation of NV letdown within 30 minutes of a complete severance of a letdown header. Operations expectation is that leak will be isolated as soon as it is identified.

Follow-up planned:
None.

References:
FSAR 15.6.2.2
AP/1/A/5500/10 (NC System Leakage Within the Capacity of Both NV Pumps)

Comments:
Operators can easily isolate this leak within time required.

1 Pt. Pressurizer Pressure Channel 1 Fails low. Pressurizer Pressure Control switch is in the 1-2 position.

Which one of the following describes the correct pressurizer pressure control response with no operator action?

A. **NC-32A, NC-36B and PZR Spray Valves will not open**
All Pressurizer heaters energize
Reactor Coolant system pressure cycles between 2335 and 2185 psig
~~**Reactor will not trip**~~

B. **NC-34A and PZR Spray Valves will not open**
All Pressurizer heaters energize
Reactor Coolant system pressure cycles between 2335 and 2315 psig
~~**Reactor will not trip**~~

C. **NC-34A will not open**
Only backup pressurizer heaters will energize
PZR Spray valves ~~modulate~~ cycle to ~~mitigate~~ minimize the pressure ~~increase~~
~~**Reactor will not trip**~~

D. **NC-32A, NC-36B and PZR Spray Valves will not open**
Only backup pressurizer heaters energize
~~**Reactor coolant system continue to increase**~~
Reactor trip on high pressure

Bank Question: 1125 **Answer: B**

1 Pt. Pressurizer Pressure Channel 1 Fails low. Pressurizer Pressure Control switch is in the 1-2 position.

Which one of the following describes the correct pressurizer pressure control response with no operator action?

A. **NC-32A, NC-36B and PZR Spray Valves will not open**
All Pressurizer heaters energize
Reactor Coolant system pressure cycles between 2335 and 2185 psig
Reactor will not trip

B. **NC-34A and PZR Spray Valves will not open**
All Pressurizer heaters energize
Reactor Coolant system pressure cycles between 2335 and 2315 psig
Reactor will not trip

C. **NC-34A will not open**
Only backup pressurizer heaters will energize
PZR Spray valves modulate to mitigate the pressure increase
Reactor will not trip

D. **NC-32A, NC-36B and PZR Spray Valves will not open**
Only backup pressurizer heaters energize
Reactor coolant system pressure continues to increase
Reactor trip on high pressure

Distracter Analysis:.

A. **Incorrect**:
Plausible:
B. **Correct**:
C. **Incorrect**:
Plausible:
D. **Incorrect**
Plausible:

LEVEL: RO & SRO

KA: 010 K6.02 (3.2/3.5)

SOURCE: Bank Seabrook 2003 NRC Exam

LEVEL OF KNOWLEDGE: Analysis

AUTHOR:

LESSON: OP-MC-PS-IPE

OBJECTIVES: OP-MC-PS-IPE Obj. 12

REFERENCES: OP-MC-PS-IPE page 35

SYSTEM: **010 Pressurizer Pressure Control System (PZR PCS)**

K4	**Knowledge of PZR PCS design feature(s) and/or interlock(s) which provide for the following:** (CFR: 41.7)		
K4.01	Spray valve warm-up	2.7	2.9
K4.02	Prevention of uncovering PZR heaters	3.0	3.4
K4.03	Over pressure control	3.8	4.1
K5	**Knowledge of the operational implications of the following concepts as the apply to the PZR PCS:** (CFR: 41.5 / 45.7)		
K5.01	Determination of condition of fluid in PZR, using steam tables	3.5	4.0
K5.02	Constant enthalpy expansion through a valve	2.6	3.0*
K6	**Knowledge of the effect of a loss or malfunction of the following will have on the PZR PCS:** (CFR: 41.7 / 45.7)		
K6.01	Pressure detection systems	2.7	3.1
[redacted]	PZR	3.2	3.5
K6.03	PZR sprays and heaters	3.2	3.6
K6.04	PRT	2.9	3.2
K6.05	Valves	2.3	2.4
K6.06	Sensors and detectors	2.3	2.4
K6.07	Controllers and positioners	2.3	2.5
	ABILITY		
A1	**Ability to predict and/or monitor changes in parameters (to prevent exceeding design limits) associated with operating the PZR PCS controls including:** (CFR: 41.5 / 45.5)		
A1.01	PZR and RCS boron concentrations	2.8	2.9*
A1.02	Spray and surge line flow rates	2.4	2.6*
A1.03	PRT pressure and temperature	2.9	3.2
A1.04	Effects of temperature change during solid operation	3.6	3.8
A1.05	Pressure effect on level	2.8	2.9
A1.06	RCS heatup and cooldown effect on pressure	3.1	3.2
A1.07	RCS pressure	3.7	3.7
A1.08	Spray nozzle DT	3.2	3.3
A1.09	Tail pipe temperature and acoustic monitors	3.4	3.7

10.	Describe all alarms, control functions, and interlocks generated by pressurizer pressure which are not controlled by the Pressurizer Master Controller (include setpoints).		X	X	X	X
11.	Describe the protection (signals, setpoints, permissives) associated with Pressurizer pressure (logic not required).		X	X	X	X
12.	For any Pressurizer Pressure Control System input signal failure, determine the effect and evaluate operator action to be taken.			X	X	X
13.	Concerning the Technical Specifications related to the Pressurizer Pressure Control System:					
	• Given the LCO title, state the LCO (including any COLR values) and applicability.			X	X	X
	• For any LCO's that have action required within one hour, state the action.			X	X	X
	• Given a set of parameter values or system conditions, determine if any Tech. Spec. LCO's is (are) not met and any action(s) required within one hour.			X	X	X
	• Given a set of parameters or system conditions and the appropriate Tech Spec, determine the required action(s)			X	X	X
	• Discuss the bases for a given Tech. Spec. LCO or Safety Limit *** SRO ONLY**				X	*

3.2 Abnormal and Emergency Operation

3.2.1 Instrument Channel Failures

Objective #12

The following table covers Pzr pressure channel failures, the effect of the failure, and the appropriate Operator action to take for the failure. NOTE: The table assumes the Pzr Pressure Control Switch is in the 1-2 position prior to the failure.

CHANNEL	FAILURE	EFFECT	OPERATOR ACTION
I	HIGH	• Sprays will open fully • PORV NC34 will open <u>With no Operator Action</u> • Actual pressure decreases • PORV 34 closes @ 2185 psig • Low Press Rx Trip @ 1945 psig • Low Press SI @ 1845 psig	**Note**: Consult T. S. for all instr. failures. Select Position 3-2
	LOW	• All heaters on fully • Sprays will close (if open) • PORV NC34 will not open <u>With no Operator Action</u> • Press increases until PORV's 32&36 open @ 2335 psig • Press modulates 2335-2315 psig as PORV's cycle	Select Position 3-2
II	HIGH	• PORV's NC32 and 36 will open <u>With no Operator Action</u> • PORV's will be blocked closed @ 2185 as actual pressure decreases • Press Master Controller output will decrease, turning on Backup Heaters	Select Position 1-4
	LOW	• PORV's 32&36 will not auto open	Select Position 1-4
III	HIGH	• PORV's 32&36 will remain unblocked below 2185 psig	NONE
	LOW	• PORV's 32&36 will not open (in auto)	NONE
IV	HIGH	• PORV 34 remains unblocked below 2185 psig	NONE
	LOW	• PORV NC34 will not open (in auto)	NONE

..010.K6.02 | 5/30/2003

Seabrook 1 | Exam Level R | Mark Question | Print Recor | New Searc | Ex

Question

The plant is operating at 100% power. All systems are lined up and operating normally. PZR pressure transmitter PT-455 fails low. Which of the following describes the expected plant response? Assume no operator action.

Answer:

Control and backup PZR heaters energize, PZR pressure increases, PZR spray cannot mitigate pressure increase, PORV >B= eventually opens, reactor trips on high pressure.

Distracter 1

Control and backup PZR heaters de-energize, PZR pressure decreases, PZR spray will no longer auto-actuate, plant will eventually trip due to low pressure SI actuation.

Distracter 2

Control and backup PZR heaters energize, PZR pressure increases , PZR pray cannot mitigate pressure increase, PORV >A= eventually opens at 2385 psig and reactor trips on high pressure.

Distracter 3

Control and backup heaters and PZR spray are automatically controlled by PT456, no effect on plant except low input to ESFAS and RPS.

Distracter Analysis:

Answer:

PT-455 is controlling channel; all heaters and spray auto functions controlled by PT-455 (normally)

Distracter 1:

A - heaters energize
B - PORV >A= cannot work due to AND input from PT-455
D- No auto back-up

Distracter 2:

A - heaters energize
B - PORV >A= cannot work due to AND input from PT-455
D- No auto back-up

Distracter 3:

A - heaters energize
B - PORV >A= cannot work due to AND input from PT-455
D- No auto back-up

1 Pt. Given the following conditions on Unit 2?

- Reactor Power 100%
- Rod control in manual
- All other controls in automatic

Which one of the following will cause the Over Temperature Delta T trip setpoint to decrease?

A. ~~Auctioneered high Tave fails low.~~

B. **N42 power range Δ Flux fails high.**

C. **RCS Wide Range pressure channel fails low.**

D. **Power reduction to 50% with normal pressure and temperature.**

Bank Question: 1126 **Answer: B**

1 Pt. Given the following conditions on Unit 2?

- Reactor Power 100%
- Rod control in manual
- All other controls in automatic

Which one of the following will cause the Over Temperature Delta T trip setpoint to decrease?

A. Auctioneered high Tave fails low.

B. N42 power range Δ Flux fails high.

C. RCS Wide Range pressure channel fails low.

D. Power reduction to 50% with normal pressure and temperature.

Distracter Analysis:.

A. **Incorrect**:
Plausible: If the student gets turned around. High T-avg will lower setpoint.

B. **Correct**:

C. **Incorrect**:
Plausible: A lower pressure would lower the setpoint, but "WR" pressure doesn't input the calculation

D. **Incorrect**
Plausible: If the student gets turned around, lower power levels increase the setpoint.

LEVEL: RO and SRO

KA: 012 A1.01 (2.9*/3.4*)

SOURCE: BANK Cook 1 2001 NRC Exam

LEVEL OF KNOWLEDGE: Analysis

AUTHOR:

LESSON: OP-MC-IC-IPE

OBJECTIVES: OP-MC-IC-IPE Obj. 10

REFERENCES: OP-MC-IC-IPE page 45

SYSTEM:	**012 Reactor Protection System (RPS)**		
K5	**Knowledge of the operational implications of the following concepts as the apply to the RPS:** (CFR: 41.5 / 45.7)		
K5.01	DNB	3.3*	3.8
K5.02	Power density	3.1*	3.3*
K6	**Knowledge of the effect of a loss or malfunction of the following will have on the RPS:** (CFR: 41.7 / 45/7)		
K6.01	Bistables and bistable test equipment	2.8	3.3
K6.02	Redundant channels	2.9	3.1
K6.03	Trip logic circuits	3.1	3.5
K6.04	Bypass-block circuits	3.3	3.6
K6.05	Test circuits	2.4	2.8
K6.06	Sensors and detectors	2.7*	2.8
K6.07	Core protection calculator	2.9*	3.2*
K6.08	COLSS	3.6*	3.7*
K6.09	CEAC	3.6*	3.7*
K6.10	Permissive circuits	3.3	3.5
K6.11	Trip setpoint calculators	2.9*	2.9
	ABILITY		
A1	**Ability to predict and/or monitor Changes in parameters (to prevent exceeding design limits) associated with operating the RPS controls including:** (CFR: 41.5 / 45.5)		
A1.01	Trip setpoint adjustment	2.9*	3.4*
A2	**Ability to (a) predict the impacts of the following malfunctions or operations on the RPS; and (b) based on those predictions, use procedures to correct, control, or mitigate the consequences of those malfunctions or operations:** (CFR: 41.5 / 43.5 / 45.3 / 45.5)		
A2.01	Faulty bistable operation	3.1	3.6
A2.02	Loss of instrument power	3.6	3.9
A2.03	Incorrect channel bypassing	3.4	3.7
A2.04	Erratic power supply operation	3.1	3.2
A2.05	Faulty or erratic operation of detectors and function generators	3.1*	3.2*
A2.06	Failure of RPS signal to trip the reactor	4.4	4.7
A2.07	Loss of dc control power	3.2*	3.7

SEQ	OBJECTIVE	NLO	NLOR	LPRO	LPSO	LOR
8	Describe the function of the First-Out annunciator panel. ICIPE008		X	X	X	
9	Given a Limit and/or Precaution associated with an operating procedure, discuss its basis and applicability. ICIPE009		X	X	X	X
10	List all the Reactor Trip Signals including the setpoints, logic permissives and bases/protection afforded by each. ICIPE010		X	X	X	X
11	List all the protective system permissive ("P" signal) interlocks to include input parameter(s), logic and function. For interlocks which provide Trip block, state the Trips affected and whether Auto or Manual block. ICIPE011		X	X	X	X
12	List all the protection system control ("C" signal) interlocks including logic and functions. ICIPE012		X	X	X	X
13	Briefly describe the incident that occurred at Salem Nuclear Plant and how this event affected McGuire Reactor Trip Breaker operation. ICIPE013		X	X	X	X

Objective # 10

Power Range NIS Low Setpoint (2/4 channels = 25%) - Protects against startup accidents. The trip can be manually blocked when 2/4 PR channels > 10% (P-10) by using the two control board switches, one per train. The control board provides indication of the bistable block. This trip is auto-reinstated when 3/4 PR channels < 10% (P-10).

Power Range NIS High setpoint (2/4 channels = 109%) - protects against an overpower condition which could lead to a DNB concern. This circuit also provides a rod withdrawal stop when 1/4 channels > 103% power (C-2).

Power Range Positive (+) Rate (2/4 channels + 5% in 2 sec) - protects against an ejected rod accident for DNB concerns.

Pressurizer High Pressure (2/4 channels = 2385 psig) - Protects against losing NC system integrity.

Pressurizer Low Pressure (2/4 channels = 1945 psig) - protects against DNB due depressurization. This "at-power" trip protection is auto-blocked < 10% power (P-7) and is automatically reinstated > P-7.

Pressurizer High Level (2/3 channels = 92%) - protects system integrity by preventing the passage of water through the safeties. This "at-power" trip protection is auto-blocked < 10% power (P-7) and is automatically reinstated > P-7.

OTΔT (2/4 channels = variable) - provides DNB protection. DNB causes a large decrease in the heat transfer coefficient between the fuel surface and the coolant, resulting in high fuel clad temperature. The setpoint is a function of the 120% full power ΔT, Tavg, Pressurizer Pressure, and Δ Flux. Pressures below 2235 psig cause the setpoint to decrease while pressures above 2235 psig cause an increase in the setpoint. Tavg above 585 °F causes the setpoint to decrease while Tavg below 585 °F causes an increase in the setpoint. A Δ Flux more positive than the limit in the COLR (positive breakpoint) causes the setpoint to decrease. This circuit also provides a rod withdrawal stop and Turbine Runback 2% (C-3) below the trip setpoint.

OPΔT (2/4 channels = variable) - protects against excessive fuel centerline temperature due to high fuel rod power density (kW/ft). The setpoint is a function of the 109% full power ΔT, Tavg, Rate of Tavg increase, and Δ Flux. Tavg above 585 °F cause the setpoint to decrease with no credit for Tavg below 585 °F. A Δ Flux more positive than the limit in the COLR (positive breakpoint) or more negative than the limit in the COLR (negative breakpoint) causes the setpoint to decrease. This circuit also provides a rod withdrawal stop and Turbine Runback 2% (C-4) below the trip setpoint.

NC Pump Bus Low Voltage (2/4 busses = 74%) - this anticipatory loss of coolant flow trip protects against DNB. This "at-power" trip protection is auto-blocked < 10% power (P-7) and is automatically reinstated > P-7.

..012.a1.01 | 9/10/2001

Cook 1 | Exam Level R | Mark Question | Print Recor | New Searc | Exit

Question

The following plant conditions exist:

Reactor power 100%
Rod control in manual
All other controls in automatic

Which ONE of the following will cause the OverTemperature Delta-T trip setpoint to decrease?

Answer: N42 power range lower detector fails low

Distracter 1 Auctioneered high Tavg fails low

Distracter 2 Power reduction to 50% with normal pressure and temperature

Distracter 3 RCS Wide Range pressure channel fails low

Distracter Analysis:

Answer:

Distracter 1:

Distracter 2:

Distracter 3:

1 Pt. During normal power operations the following conditions exist on Unit 2:

- Channel 1 containment pressure failed 12 hours ago.
- The Channel 1 Containment Spray bistable is placed in the Tech Spec required ~~"bypass"~~ condition.

If containment pressure Channel 2 loses power, what would be the effect on the logic to initiate containment spray?

A. Channel 1 "tripped", Channel 2 will not trip, remaining logic 1/2 from channels 3 and 4.

B. Channel 1 not tripped, Channel 2 "tripped", remaining logic 1/2 from channels 3 and 4.

C. Channel 1 not "tripped", Channel 2 will not trip, remaining logic 2/2 from channels 3 and 4.

D. Containment Spray ~~should be~~ will be actuated from channels 1 and 2.

Bank Question: 1127 **Answer: C**

1 Pt. During normal power operations the following conditions exist on Unit 2:

- Channel 1 containment pressure failed 12 hours ago.
- The Channel 1 Containment Spray bistable is placed in the Tech Spec required "bypass" condition.

If containment pressure Channel 2 loses power, what would be the effect on the logic to initiate containment spray?

A. Channel 1 "tripped", Channel 2 will not trip, remaining logic 1/2 from channels 3 and 4.

B. Channel 1 not tripped, Channel 2 "tripped", remaining logic 1/2 from channels 3 and 4.

C. Channel 1 not "tripped", Channel 2 will not trip, remaining logic 2/2 from channels 3 and 4.

D. Containment Spray should be actuated from channels 1 and 2.

Distracter Analysis:.

A. Incorrect
Plausible: If operator thinks T.S. required position is tripped.

B. Incorrect:
Plausible If operator thinks channel losing power fails to the tripped position.

C. Correct:

D. Incorrect
Plausible: If student thinks T.S. position is tripped and loss of power position is tripped.

LEVEL: RO & SRO

KA: 013 K6.01 (2.7/3.1)

SOURCE: NEW

LEVEL OF KNOWLEDGE: Analysis

AUTHOR: CWS

LESSON: OP-MC-ECC-ISE

OBJECTIVES: OP-MC-ECC-ISE, obj 13

REFERENCES: OP-MC-ECC-ISE, page 27
Tech Spec pg 3.3.2-3

SYSTEM:	**013 Engineered Safety Features Actuation System (ESFAS)**		
K6	**Knowledge of the effect of a loss or malfunction on the following will have on the ESFAS:** (CFR: 41.7 / 45.5 to 45.8)		
K6.01	Sensors and detectors	2.7*	3.1*
K6.02	Controllers and positioners	2.2	2.6
K6.03	Breakers, relays, and disconnects	2.4	2.9
K6.04	Trip setpoint calculators	2.4*	2.7*
	ABILITY		
A1	**Ability to predict and/or monitor changes in parameters (to Prevent exceeding design limits) associated with operating the ESFAS controls including:** (CFR: 41.5 / 45.5)		
A1.01	RCS pressure and temperature	4.0	4.2
A1.02	Containment pressure, temperature, and humidity	3.9	4.2
A1.03	Feedwater header differential	2.6*	2.6*
A1.04	S/G level	3.4	3.6
A1.05	Main steam pressure	3.4	3.6
A1.06	RWST level	3.6	3.9
A1.07	Containment radiation	3.6	3.9
A1.08	Containment sump level	3.7	3.8
A1.09	T-hot	3.4	3.7
A1.10	T-cold	3.4	3.7
A2	**Ability to (a) predict the impacts of the following malfunctions or operations on the ESFAS; and (b) based Ability on those predictions, use procedures to correct, control, or mitigate the consequences of those malfunctions or operations;** (CFR: 41.5 / 43.5 / 45.3 / 45.13)		
A2.01	LOCA	4.6	4.8
A2.02	Excess steam demand	4.3	4.5
A2.03	Rapid depressurization	4.4	4.7
A2.04	Loss of instrument bus	3.6	4.2
A2.05	Loss of dc control power	3.7	4.2
A2.06	Inadvertent ESFAS actuation	3.7*	4.0
A3	**Ability to monitor automatic operation of the ESFAS including:** (CFR: 41.7 / 45.5)		
A3.01	Input channels and logic	3.7*	3.9
A3.02	Operation of actuated equipment	4.1	4.2
A3.03	Continuous testing feature	2.4*	2.7*

	OBJECTIVE	NLO	NLOR	LPRO	LPSO	LOR
13	List the setpoints, permissives, and logic required to initiate the following: • Containment Spray (NS) Actuation • Phase "B" Isolation • Main Steam Isolation (MSI) • Main Feedwater Isolation (FWI)		X	X p4026X	X	X
14	Explain the relationship between SSPS Testing and the operability of the Systems and functions actuated from the Engineered Safety Features Actuation System.		X	X	X	X
15	Discuss the purpose of the ESF Monitor Lite Panel (BOP Panel).		X	X	X	
16	Concerning AP/1 or 2/A/5500/35, ECCS Actuation During Plant Shutdown. • State the purpose of the AP. • Recognize the symptoms that would require implementation of the AP.		X	X	X	X
17	Concerning the Technical Specifications related to the Engineered Safeguards Actuation System: • Given the LCO title, state the LCO (including any COLR values) and applicability. • For any LCO's that have action required within one hour, state the action. • Given a set of parameter values or system conditions, determine if any Tech Spec LCO's is (are) not met and any action(s) required within one hour. • Given a set of plant parameters or system conditions and the appropriate Tech Specs, determine required actions. • Discuss the bases for a given Tech Spec LCO or Safety Limit. * - SRO Only			X X X	X X X X X	X X X X *

Phase "A" Containment Isolation (S_t) is actuated by a Safety Injection (S_S) or Manually ($^1/_2$ pushbuttons). Phase "A" isolates all non-essential containment penetrations. A Manual Phase "A" (S_t *p829Y) actuation will actuate S_H (Containment Ventilation Isolation). The initiate pushbutton for Phase "A" (S_t) is also the initiate pushbutton for Containment Ventilation Isolation (S_H) but they have separate reset pushbuttons. Phase "A" can be reset with S_S (Safety Injection) signal present (not reset), via Control Board Pushbuttons.

Objective # 13

Containment Spray Actuation (NS) is actuated by:

Hi Hi Containment Pressure	**>3.0 psig on $^2/_4$ channels plus CPCS**
Manually	**$^1/_2$ pushbuttons plus CPCS**

NOTE: Initiate pushbuttons for "Phase B and Containment Spray" are the same, however "Reset" pushbuttons are separate.

The automatic actuation of Containment Spray is one of the only functions that requires the bistable to energize to perform its required action. It is not desirable to have a loss of power actuate containment spray, since the consequences of an inadvertent actuation of containment spray could be serious. Note that this function also has the inoperable channel placed in bypass rather than trip to decrease the probability of an inadvertent actuation.

The Containment Pressure Control System (CPCS) requires a 0.35 psig CPCS signal for permissive. NS can be manually actuated with this permissive. The signal can be manually reset by (2) separate train related pushbuttons.

When containment pressure decreases to < 0.35 psig, CPCS stops the NS Pumps and closes the NS pump discharge containment isolation valves. If the NS signal has not been reset and containment pressure increases to ≥ 0.35 psig, CPCS opens the NS valves. If pressure continues to increase, at ≥ 0.8 psig, pumps restart. Having the pump restart delayed reduces starting duty cycles.

If the NS signal has been reset and containment pressure is < 0.35 psig, NS will secure as stated above. NS will not restart automatically until containment pressure increases to > 3 psig again.

The NS signal can be reset with containment pressure > 3 psig. This would be done in order to transfer NS pump suction to the containment recirc sump in accordance with EP/1(2)/A/5000/ES-1.3 "Transfer to Cold Leg Recirc".

ACTIONS (continued)

CONDITION	REQUIRED ACTION	COMPLETION TIME
E. One Containment Pressure channel inoperable.	E.1 ----------NOTE---------- One additional channel may be bypassed for up to 4 hours for surveillance testing. ---------- Place channel in bypass.	6 hours
	OR	
	E.2.1 Be in MODE 3.	12 hours
	AND	
	E.2.2 Be in MODE 4.	18 hours
F. One channel or train inoperable.	F.1 Restore channel or train to OPERABLE status.	48 hours
	OR	
	F.2.1 Be in MODE 3.	54 hours
	AND	
	F.2.2 Be in MODE 4.	60 hours
G. One Steam Line Isolation Manual Initiation - individual channel inoperable.	G.1 Restore channel to OPERABLE status.	48 hours
	OR	
	G.2 Declare associated steam line isolation valve inoperable.	48 hours

(continued)

1 Pt. On Unit 2 a plant cooldown and depressurization is in progress:

- P-11 Low Pressurizer Pressure Safefty Injection BLOCKED
- P-11 Low Steamline Pressure MSIV Isolation has been BLOCKED

A Steamline fault results in the following conditions:

- 'A' Main Steam pressure is 775 psig and going down
- Steam Generator level is 20% and going down
- Pressurizer Pressure is 1830 psig and going down
- Containment pressure is 1.3 psig and going up
- ETB has zero volts

What is the status of the Unit 2 Emergency Core Cooling System (ECCS) equipment?

A. All ECCS equipment is operating.

B. None of the ECCS equipment is operating.

C. Only 'A' Train ECCS equipment is operating.

D. Only 'B' Train ECCS equipment is operating.

ANSWERS Q 1120

Bank Question: 1128 **Answer:** C B

1 Pt. On Unit 2 a plant cooldown and depressurization is in progress:

All actions associated with RCS pressure at P-11 are complete

- P-11 Low Pressurizer Pressure Safefty Injection BLOCKED
- P-11 Low Steamline Pressure MSIV Isolation has been BLOCKED

A Steamline fault results in the following conditions:

- 'A' Main Steam pressure is 775 psig and going down
- Steam Generator level is 20% and going down
- Pressurizer Pressure is ~~1836~~ 1840 psig and going down
- Containment pressure is 1.3 psig and going up
- ETB has zero volts
- IMMEDIATE ACTIONS OF AP/1/A/5500/07, Loss of Emergency Pwr.

What is the status of the Unit 2 Emergency Core Cooling System (ECCS) equipment?

A. All ECCS equipment is operating.

B. None of the ECCS equipment is operating.

C. Only 'A' Train ECCS equipment is operating.

D. Only 'B' Train ECCS equipment is operating.

Distracter Analysis: The 1.3 psig containment pressure would generate an SI signal for both trains. Since ETB is de-energized, only 'A' train ECCS would be operating.

A. Incorrect:
Plausible: If didn't recognize ETB de-energized

B. Incorrect:
Plausible: If didn't recognize the containment pressure SI or thought blocked because below P-11.

C. Incorrect:
Plausible:

D. Incorrect
Plausible:

with cntmt pressure 1.3 psig steam of question does not matter.

LEVEL: RO & SRO

KA: 013 A4.03 (4.5/4.7)

SOURCE: BANK Point Beach NRC Exam 2002

LEVEL OF KNOWLEDGE: Comprehension

AUTHOR: CWS

LESSON: OP-MC-ECC-ISE

OBJECTIVES: OP-MC-ECC-ISE, obj 6

REFERENCES: OP-MC-ECC-ISE, page 21

SYSTEM: **013 Engineered Safety Features Actuation System (ESFAS)**

A4	**Ability to manually operate and/or monitor in the control room:** (CFR: 41.7 / 45.5 to 45.8)		
A4.01	ESFAS-initiated equipment which fails to actuate	4.5	4.8
A4.02	Reset of ESFAS channels	4.3	4.4
A4.03	ESFAS initiation	4.5	4.7

CLASSROOM TIME (Hours)

NLO	NLOR	LPRO	LPSO	LOR
2.5	1.5	1.5	1.5	1.5

OBJECTIVES

	OBJECTIVE	NLO	NLOR	LPRO	LPSO	LOR
1	State the purpose of the Engineered Safeguards System.	X	X	X	X	
2	Explain the need and reasoning behind the redundancy requirements for two trains of safety related systems.	X	X	X	X	
3	State how the operator would be aware if more than one protection cabinet door was opened simultaneously.		X	X	X	X
4	Define the following terms: S_s, S_t, S_P, S_H	X		X	X	
5	List the conditions that will initiate the following: • Safety Injection (S_s) • Phase "A" Isolation (S_t) • Containment Spray/Phase "B" Isolation (S_P) • Containment Ventilation Isolation (S_H) • Main Steam Isolation (MSI) • Main Feedwater Isolation (FWI) • VE (Annulus Ventilation) System Start • H_2 Skimmer and Air Return Fan Start (VX)	X				
6	List all Safety Injection (S_s) actuation signals, setpoints, logic, and the type of accident each signal provides protection for.		X	X	X	X
7	List the pumps that automatically start following a safety injection actuation.		X	X	X	X
8	State which Safety Injection (S_s) signal can be blocked.	X	X	X	X	X
9	Explain the reason for blocking a Safety Injection (S_s) signal.	X	X	X	X	X
10	List the interlock and parameter setpoint that allows blocking Safety Injection (S_s).		X	X	X	X
11	Describe the operator action needed to block Safety Injection.		X	X	X	X
12	List the conditions that allow RESET of Safety Injection.		X	X	X	X

3.0 SYSTEM OPERATION

3.1 Normal Operation

Objective # 6

Safety Injection Actuation (S_S)

Actuation Signals and logic

Signal	Setpoint	Logic	Interlocks	Reason
Manual		$^1/_2$ pushbuttons		Operator Judgment
Lo-pressurizer pressure	<1845 psig	$^2/_4$ channels	P-11	LOCA Protection
Hi-containment pressure	>1.0 psig	$^2/_3$ channels		LOCA and Steam Break Protection

LOCA protection is provided by the Low Pressurizer Pressure (1845 psig) and the High Containment Pressure (1 psig) Safety Injection Signals.

Steam break protection is provided by the High Containment Pressure (1 psig) Safety Injection Signal.

Objective # 7

Safety Injection Signal (S_S) initiates the following functions:

- Reactor Trip (P4)
- D/G sequencer which in turn starts the following:
  1) **Centrifugal Charging Pumps (NV)**
  2) **Safety Injection Pumps (NI)**
  3) **Residual Heat Removal Pumps (ND)**
  4) **Idle train of Component Cooling Pumps (KC)**
  5) **Idle train of Nuclear Service Water Pumps (RN)**
  6) **Motor Driven Auxiliary Feedwater Pumps (CA)**
  7) Emergency Diesel Generator
  8) Provides start signal to normally running auxiliary building filtered exhaust fans and trips non-filtered exhaust fans

..013.a4.03 | 2/2/2002 | Mark Question | Print Recor | New Searc | Exit

Point Beach 1 | Exam Level | R

Question

Unit 2 was initially at 100% power and after an initiating event, the following plant conditions exist:

- Unit 2 'A' Steam Generator Narrow Range Level is 10% and lowering.
- Unit 2 'A' Steam Generator pressure is 400 psig and lowering.
- Unit 2 Containment Pressure is 2.1 psig and lowering.
- 4.16 kV Bus 2A05 indicates zero volts on C-02.

What is the status of Unit 2 Emergency Core Cooling System (ECCS) equipment?

Answer: Only 'B' Train ECCS equipment is operating.

Distracter 1 All ECCS equipment is operating.

Distracter 2 None of the ECCS equipment is operating.

Distracter 3 Only 'A' Train ECCS equipment is operating.

Distracter Analysis:

Answer:

Distracter 1:

Distracter 2:

Distracter 3:

1 Pt

Unit 2 was operating at 100% when a complete loss of offsite power (LOOP) occurred. All systems were operable and in a normal alignment.

Which one of the following containment ventilation systems will have all operating fans/air handling units stopped due to a loss of offsite power?

A. VU ventilation units

B. Pressurizer booster fans

C. Pipe tunnel booster fans

D. Steam generator booster fans

Bank Question: 1129 **Answer: D**

1 Pt

Unit 2 was operating at 100% when a complete loss of offsite power (LOOP) occurred. All systems were operable and in a normal alignment.

Which one of the following containment ventilation systems will have all operating fans/air handling units stopped due to a loss of offsite power?

A. VU ventilation units

B. Pressurizer booster fans

C. Pipe tunnel booster fans

D. Steam generator booster fans

Distracter Analysis:

A. **Incorrect**: VU AHUs and return air fans will start on a LOOP/blackout – they have an emergency power supply.
Plausible: They will not start in a safety injection signal

B. **Incorrect**: Pressurizer booster fans will start on a LOOP from the B/O sequencer – they have an emergency power supply.
Plausible: If the candidate confuses the emergency power supply for the pressurizer booster fans with the steam generator booster fans

C. **Incorrect**: Pipe tunnel booster fans will start on a LOOP from the B/O sequencer – they have an emergency power supply.
Plausible: They will not start in a safety injection signal

D. **Correct**: Steam generator booster fans do not restart on a LOOP - B/O signal – they do not have an emergency power supply

Level: RO

KA: SYS 022 K2.01 (3.0*/3.1)

Lesson Plan Objective: CNT-VUL LPRO 5

Source: McGuire Bank NRC Exam 2003

Level of Knowledge: Memory

References:
1. OP-MC-CNT-VUL pages 35, 39

022 Containment Cooling System (CCS)

TASK:
Perform lineups of the CCS
Fill and vent the CCS
Start the CCS
Monitor the CCS (air and water sides)
What if lower containment temperature cannot be controlled within specified limits?
Shut down the CCS

K/A NO.	KNOWLEDGE	IMPORTANCE RO	IMPORTANCE SRO
K1	**Knowledge of the physical connections and/or cause-effect relationships between the CCS and the following systems:** (CFR: 41.2 to 41.9 / 45.7 to 45.8)		
K1.01	SWS/cooling system	3.5	3.7
K1.02	SEC/remote monitoring systems	3.7?	3.5?
K1.03	Auxiliary steam	2.4*	2.3*
K1.04	Chilled water	2.9*	2.9*
K2	**Knowledge of power supplies to the following:** (CFR: 41.7)		
K2.01	Containment cooling fans	3.0*	3.1
K2.02	Chillers	2.5*	2.4*
K2.03	MOVs	2.3*	2.3
K3	**Knowledge of the effect that a loss or malfunction of the CCS will have on the following:** (CFR: 41.7 / 45.6)		
K3.01	Containment equipment subject to damage by high or low temperature, humidity, and pressure	2.9*	3.2*
K3.02	Containment instrumentation readings	3.0	3.3
K3.03	Electrical insulation	1.7	2.1
K4	**Knowledge of CCS design feature(s) and/or interlock(s) which provide for the following:** (CFR: 41.7)		
K4.01	Cooling of containment penetrations	2.5*	3.0*
K4.02	Correlation of fan speed and flowpath changes with containment pressure	3.1*	3.4*
K4.03	Automatic containment isolation	3.6*	4.0
K4.04	Cooling of control rod drive motors	2.8	3.1
K4.05	Containment cooling after LOCA destroys ventilation ducts	2.6*	2.7
K4.06	Containment pipe chase cooling	2.1*	2.4*

CLASSROOM TIME (Hours)

NLO	NLOR	LPRO	LPSO	LOR
2.0	2.0	2.0	2.0	1.0

OBJECTIVES

	OBJECTIVE	NLO	NLOR	LPRO	LPSO	LOR
1.	State the purpose of the following Containment Ventilation Subsystems • Upper Containment Ventilation System. • Lower Containment Ventilation System. • Control Rod Drive Ventilation System. • Incore Instrumentation Room Ventilation System.	X	X	X	X	
2.	State the source of cooling water to the upper and lower containment ventilation units.	X	X	X	X	
3.	Discuss the operation of the Containment Ventilation Systems (VU,VL,VR,VT) including the components operating during normal unit operations.	X	X	X	X	
4.	State the automatic actions that occur to the Lower Containment Ventilation units if containment pressure increases to 0.5 psig.	X	X	X	X	X
5.	Discuss the automatic alignment of the Containment Ventilation Systems (VU, VL, VR, VT) following a: • Safety Injection signal. • Blackout signal.		X	X	X	X
6.	Concerning the "Reset/Retransfer" switches: • List the units having a "Reset/Retransfer" switch. • Discuss the purpose and operation of the switch.	X	X	X	X	X
7.	Describe the local controls and indications associated with the Containment Ventilation Systems.	X	X	X	X	X
8.	Describe the Control Room controls and indications associated with the Containment Ventilation Systems.		X	X	X	X

Objective #9

3.1.1. Limits and Precautions

OP/1/A/6450/001, Containment Ventilation Systems.

2.1 All VL Units should be operated at the same speed.

Basis: Mixed speed would cause inadequate flows for fans in slow speed.

2.2 Only one Pipe Tunnel Booster Fan should be operated at a time.

Basis: This prevents operating the second fan with no discharge path which could lead to overheating and possible failure of the fan.

2.3 **IF** three VL AHUs operating in "HIGH", "B" "C", and "D" should be in operation to maximize cooling for DRPI cabinets.

Basis: Self explanatory

2.4 **WHEN** two VL AHUs operating, VL AHUs on opposite sides of Containment Building should be in operation.

Basis: This is done to enhance uniform cooling of the building.

3.2. Abnormal and Emergency Operation

Objective #5

3.2.1 Blackout event:

During a Blackout, the B/O Sequencer will start the VL Units in low speed regardless of their switch position. These fans can not be stopped until sequencer is reset. Each VL HVAC selector switch is disabled by the sequencer (see Minor Mod MGMM-12479).

3.2.2 Safety Injection (S_S)

Objective #5

The VL units and Pressurizer Booster Fans are shunt tripped off their normal supply when an S_S signal is initiated. The Pressurizer Booster Fans swap to their emergency power supply, if available, and the selected fan will start. The VL units are transferred to the emergency power source, if available, and will start in high speed regardless of their switch position. When powered from this emergency power, control from the HVAC is disabled. (Refer to PIP #1-M97-1861) Once transferred, manual re-transfer to the normal source is required.

The VR units are shunt tripped from essential power when an S_S is initiated. If unit load center power is available, a transfer switch will automatically align to the emergency power source and start all units (regardless of their switch position). Once transferred, manual re-transfer to the normal source is required.

The VT units are shunt tripped from essential power when an S_S is initiated. If unit load center power is available, a transfer switch will automatically align to the emergency power source and start all units (regardless of switch position). The fans can not be stopped under these conditions, however, normal or max cool can be selected as desired during this event. Once transferred, manual re-transfer to the normal source is required.

The VU units, Return Air Fans, and the Pipe Tunnel Booster Fans are shunt tripped off on the S_S signal. Control power and indication is lost to all these fans when the shunt trip opens the respective breakers.

The Steam Generator Booster Fans do not receive a S_S signal nor are they powered from an essential bus, therefore they continue to run as they were prior to the Safety Injection.

Bank Question: 957.1 ***Answer: D***

1 Pt

Unit 2 was operating at 100% when a complete loss of offsite power (LOOP) occurred. All systems were operable and in a normal alignment.

Which one of the following containment ventilation systems will have all operating fans/air handling units stopped after 5 minutes without any offsite power?

A. VU ventilation units

B. Pressurizer booster fans

C. Pipe tunnel booster fans

D. Steam generator booster fans

Distracter Analysis:

A. **Incorrect**: VU AHUs and return air fans will start on a LOOP/blackout – they have an emergency power supply.
Plausible: They will not start in a safety injection signal

B. **Incorrect**: Pressurizer booster fans will start on a LOOP from the B/O sequencer – they have an emergency power supply.
Plausible: If the candidate confuses the emergency power supply for the pressurizer booster fans with the steam generator booster fans

C. **Incorrect**: Pipe tunnel booster fans will start on a LOOP from the B/O sequencer – they have an emergency power supply.
Plausible: They will not start in a safety injection signal

D. **Correct**: Steam generator booster fans do not restart on a LOOP - B/O signal – they do not have an emergency power supply

Level: RO

KA: SYS 022 K2.01 (3.0*/3.1)

Lesson Plan Objective: CNT-VUL LPRO 5

Source: Bank

Level of Knowledge: memory

References:
1. OP-MC-CNT-VUL pages 35, 39

1 Pt. 1NF-848 (NF Floor Cooling Slab Temp Control) has failed closed.

Which one of the following is an operational concern with 1NF-848 failing closed?

A. The air in the lower ice condenser would be less dense and allow the ice condenser doors to open.

B. Excessive sublimation could cause ice build up around the base of the ice condenser lower inlet doors and inhibit doors from opening.

C. The air in the lower ice condenser would be denser and not allow the ice condenser doors to open at the desired pressure.

D. Buckling will occur as a result of the freeze/thaw cycles in the ice condenser wear slab and as a result inhibit doors from opening.

Bank Question: 1130 ***Answer: D***

1 Pt. 1NF-848 (NF Floor Cooling Slab Temp Control) has failed closed.

Which one of the following is an operational concern with 1NF-848 failing closed?

A. The air in the lower ice condenser would be less dense and allow the ice condenser doors to open.

B. Excessive sublimation could cause ice build up around the base of the ice condenser lower inlet doors and inhibit doors from opening.

C. The air in the lower ice condenser would be denser and not allow the ice condenser doors to open at the desired pressure.

D. Buckling will occur as a result of the freeze/thaw cycles in the ice condenser wear slab and as a result inhibit doors from opening.

Distracter Analysis:. The glycol that passes through the ice condenser floor is a closed loop. 1NF-848 works on temperature and as the temperature of the glycol in the loop increases the valve opens to bleed out warm glycol and allow colder glycol in the system. A concern for the industry has been "buckling" where the temperature of the ice condenser floor goes through freeze/thaw cycles and as a result raises the level of the ice condenser floor. This raising of the floor will impede actual ice condenser door opening.

A. Incorrect:
Plausible:
B. Incorrect:
Plausible:
C. Incorrect:
Plausible:
D. Correct

LEVEL: RO & SRO

KA: 025 A2.03

SOURCE: NEW

LEVEL OF KNOWLEDGE: Memory

AUTHOR: CWS

LESSON: OP-MC-CNT-NF

OBJECTIVES: OP-MC-CNT-NF Objectives 2 & 3

REFERENCES: OP-MC-CNT-NF pages 7, 21, and 43

SYSTEM:	**025 Ice Condenser System**		
	ABILITY		
A1	**Ability to predict and/or monitor changes in parameters associated with operating the ice condenser system controls including:** (CFR: 41.5 / 45.5)		
A1.01	Temperature chart recorders	3.0*	3.0*
A1.02	Glycol expansion tank level	2.5*	2.2*
A1.03	Glycol flow to ice condenser air handling units	2.5*	2.5*
A2	**Ability to (a) predict the impacts of the following malfunctions or operations on the ice condenser system; correct, control, or mitigate the consequences of those malfunctions or operations:** (CFR: 41.5 / 43.5 / 45.3 / 45.13)		
A2.01	Trip of glycol circulation pumps	2.2*	2.7*
A2.02	High/low floor cooling temperature	2.7*	2.5*
A2.03	Opening of ice condenser doors	3.0*	3.2*
A2.04	Containment isolation	3.0*	3.2*
A2.05	Abnormal glycol expansion tank level	2.5*	2.7*
A2.06	Decreasing ice condenser temperature	2.5*	2.7*
A3	**Ability to monitor automatic operation of the ice condenser system, including:** (CFR: 41.7 / 45.5)		
A3.01	Refrigerant system	3.0*	3.0*
A3.02	Isolation valves	3.4*	3.4*
A4	**Ability to manually operate and/or monitor in the control room:** (CFR: 41.7 / 45.5 to 45.8)		
A4.01	Ice condenser isolation valves	3.0*	2.7*
A4.02	Containment vent fans	2.7*	2.5*
A4.03	Glycol circulation pumps	2.2*	2.2*

CLASSROOM TIME (Hours)

NLO	NLOR	LPRO	LPSO	LOR
4	3	3	3	2

OBJECTIVES

	OBJECTIVE	NLO	NLOR	LPRO	LPSO	LOR
1	State the purpose of the Ice Condenser.	X	X	X	X	
2	Given an Ice Condenser alarm, discuss the intent of the alarm.		X	X	X	X
3	State the purpose of the following components in the ice condenser region: • Turning vanes • Impingement plates • Lower ice condenser doors • Intermediate deck doors • Top deck doors • Ice condenser floor drains. • Wear slab.	X	X	X	X	
4	DELETED					
5	Explain the refrigeration process used to cool the glycol associated with the NF chillers.	X	X	X	X	
6	For the NF System chillers, discuss the action required if bubbles are present in the Freon sightglass.	X	X	X	X	X
7	State the actions to be taken when a NF Chiller compressor trips.	X	X	X	X	X
8	Deleted					
9	List the glycol expansion tank alarms and discuss automatic actions associated with the alarms.	X	X	X	X	X
10	Describe how the Ice Condenser AHUs are prevented from "icing up "	X	X	X	X	

Objective #3

The purpose of the lower support structure is to:

- Support and hold down the ice baskets in the required array.
- Provide an adequate flow area into the ice bed for air/steam mixture in an accident.
- Direct and distribute the flow of air/steam mixture through the ice bed.
- Protect containment structure opposite the ice condenser inlet doors from impingement forces when the doors open on an accident.

The purpose of the turning vanes is to:

- **Direct and distribute the flow of air/steam mixture through the ice bed.**
- **Protect containment structure opposite the ice condenser inlet doors from impingement forces when the doors open on an accident.**
- **Turn flow up through the ice bed.**
- **Reduce drag forces on lower support members.**
- **Evenly distribute flow**

The impingement plates are located around the circumference of the lower support structure. Their purpose is to reduce the impingement forces on the containment vessel in an accident.

The wear slab is a 4 inch thick layer of high strength concrete covering the floor area of the ice bays (refer to Drawing 7.2). The purpose of the wear slab is to provide a cooled surface as well as to provide personnel access support for maintenance and/or inspection. It also serves to contain the floor cooling piping. The wear slab is prepared with air entrainment mixture to minimize the detrimental effect of the freeze/thaw cycles. It is also covered with a protective coating to provide water barrier protection.

An RTD Panel for floor slab temperature provides the temperature for the individual concrete slab bays. This indication provides trends and indications of the status of the floor cooling equipment. Monitoring floor temperature is important since temperature fluctuations can result in freeze/thaw cycles which can result in floor buckling/elevation which can interfere with the proper operation of the lower inlet doors.

2.1.3 Ice Condenser Doors **(refer to Drawing 7.1)**

The purpose of the lower ice condenser doors during normal plant operation is to:

- **Provide a flow barrier from lower containment to the ice condenser lower plenum.**
- **Provide thermal insulation around the lower crane wall.**

During accident conditions, its purpose is to provide a path into the ice condenser from lower containment on a pressure increase due to a LOCA.

- "FLOOR COOLING GLYCOL HI TEMP"

Setpoint: 17°F

Origin: Temperature sensor monitoring floor cooling pumps discharge temperature. (MC1NFTS-6050)

Probable Cause:

1. Failure of control valve 1NF-848 (NF Floor Cooling Slab Temp Control).
2. Failure of NFTT 6310 (Temperature transmitter controlling 1NF-848 (NF Floor Cooling Slab Temp Control)).
3. Floor cooling pump trip.
4. Maintenance on the Ice Bed may cause transients which could raise glycol temperature faster than control valve 1NF-848 can compensate. (PIP 0-M96-1852)

Automatic Action: None

Immediate Action:

1. Verify proper operation of control valve 1NF-848 (NF Floor Cooling Slab Temp Control). If necessary, throttle open bypass.
2. IF tripped, start floor cooling pump.
3. IF available, start both floor cooling pump. (PIP 0-M96-1852)
4. IF 1NFTS-6050 (local Indication) indicates greater than 17°F, throttle open bypass for 1NF-848 (NF Floor Cooling Slab Temp Control) as necessary to clear alarm and maintain temperature approximately equal to 12°F. (PIP 0-M96-1852)

Supplementary Action: IF valve has failed, inform Maintenance.

2.2.3 Air cooling Loop (Third Stage of Cooling)

The ice condenser compartment is designed to be kept below the freezing point throughout the life of the unit. During normal operation, it is cooled to approximately 15^0F prior to ice loading and kept at that temperature indefinitely, barring occurrence of a Loss of Coolant Accident, extensive failure of the Refrigeration System, or permissible excursion during ice loading. Ice bed temperature is maintained at the specified level by means of chilled air circulating through the boundary planes of the compartment. Starting in the upper plenum, which constitutes the top boundary, air enters one of thirty air handling packages located in the plenum. The air handler cools the air and blows it down through a series of insulated duct panels lining the inner,

1 Pt.

The following conditions exist on Unit 1

- LOCA inside containment
- 1ETB has experienced a ground fault
- Auto swap to Cold Leg Recirc. has failed due to 1NI-185 A not opening.
- Attempts to manually open 1NI-185A has failed
- Control Room has implemented ECA-1.1 (Loss of Emergency Coolant Recirc.)
- Containment pressure is 12 psig , requiring the 1A NS pump running.

Which one of the following describes the NS system operation following the receipt of "FWST Lo Lo Level" (33 inches)?

A. Swap NS suction to Containment Sump

B. Secure NS, swap NS suction to Containment Sump, restart NS pump

C. Secure NS, close 1ND-19A (1A ND pump suct. from FWST or NC), swap NS suction to Containment Sump, restart NS pump,

D. Secure NS, NS cannot be aligned to Containment Sump until 1NI-185A is open

---

Bank Question: 1131 **Answer: D**

1 Pt.

The following conditions exist on Unit 1:

- LOCA inside containment
- 1ETB has experienced a ground fault
- Auto swap to Cold Leg Recirc. has failed due to 1NI-185 A not opening.
- Attempts to manually open 1NI-185A has failed
- Control Room has implemented ECA-1.1 (Loss of Emergency Coolant Recirc.)
- Containment pressure is 12 psig ~~, requiring the 1A NS pump running.~~

Which one of the following describes the NS system operation following the receipt of "FWST Lo Lo Level" ~~(33 inches)~~?

A. Swap NS suction to Containment Sump Start 1BNS pump

B. Secure NS, swap NS suction to Containment Sump, restart NS pump

C. Secure NS, close 1ND-19A (1A ND pump suct. from FWST or NC), swap NS suction to Containment Sump, restart NS pump,

D. Secure NS, NS cannot be aligned to Containment Sump until 1NI-185A is open

---

Distracter Analysis: Operator must know that at FWST lo lo level the NS pump must be secured. Operator must realize that the NS pump cannot take suction from the Containment Sump without 1NI-185A open.

A. Incorrect
Plausible:

B. Incorrect:
Plausible .

C. Incorrect:
Plausible

D. Correct

LEVEL: RO & SRO

KA: 026 A2.02 (4.2*/4.4*)

SOURCE: NEW

LEVEL OF KNOWLEDGE: Comprensive

AUTHOR: CWS

LESSON: OP-MC-ECC-NS

OBJECTIVES: OP-MC-ECC-NS, obj 2 & 6

REFERENCES: OP-MC-ECC-NS, pages 39 & 35

SYSTEM: **026 Containment Spray System (CSS)**

ABILITY

A1	**Ability to predict and/or monitor changes in parameters (to prevent exceeding design limits) associated with operating the CSS controls including:** (CFR: 41.5 / 45.5)		
A1.01	Containment pressure	3.9	4.2
A1.02	Containment temperature	3.6*	3.9
A1.03	Containment sump level	3.5	3.5
A1.04	Containment humidity	3.1	3.3
A1.05	Chemical additive tank level and concentration	3.1	3.4
A1.06	Containment spray pump cooling	2.7	3.0
A2	**Ability to (a) predict the impacts of the following malfunctions or operations on the CSS; and (b) based on those predictions, use procedures to correct, control, or mitigate the consequences of those malfunctions or operations:** (CFR: 41.5 / 43.5 / 45.3 / 45.13)		
A2.01	Reflux boiling pressure spike when first going on re-circulation	2.7	3.0
A2.02	Failure of automatic recirculation transfer	4.2*	4.4*
A2.03	Failure of ESF	4.1	4.4
A2.04	Failure of spray pump	3.9	4.2
A2.05	Failure of chemical addition tanks to inject	3.7	4.1
A2.06	Increase in spray flow following swapover, because of higher pump suction pressure	2.2	2.6
A2.07	Loss of containment spray pump suction when in recirculation mode, possibly caused by clogged sump screen, pump inlet high temperature exceeded cavitation, voiding), or sump level below cutoff (interlock) limit	3.6	3.9
A2.08	Safe securing of containment spray when it can be done)	3.2	3.7
A2.09	Radiation hazard potential of BWST	2.5*	2.9*
A3	**Ability to monitor automatic operation of the CSS, including:** (CFR: 41.7 / 45.5)		
A3.01	Pump starts and correct MOV positioning	4.3	4.5
A3.02	Verification that cooling water is supplied to the containment spray heat exchanger	3.9*	4.2*

CLASSROOM TIME (Hours)

NLO	NLOR	LPRO	LPSO	LOR
1.0	1.0	1.0	1.0	1.0

OBJECTIVES

	Objective	NLO	NLOR	LPRO	LPSO	LOR
1	State the purpose of the Containment Spray (NS) System.	X	X	X	X	
2	[redacted] System, valve numbers and instrumentation not required.	X	X	X	X	
3	Describe the local indications and controls associated with the NS System.	X				
4	Describe the controls and indications associated with the NS System.		X	X	X	X
5	Describe the signals and permissives required to initiate the NS System.	X				
6	Describe the signals, setpoints, permissives, and logic required to initiate and reset NS System.		X	X	X	X
7	Describe the operation of the NS Pump room Air Handling Unit	X	X	X	X	X
8	[redacted]		X	X	X	X
9	Evaluate local plant parameters to determine any abnormal system conditions that may exist.	X				
10	Evaluate plant parameters and status indicators to determine any abnormal system conditions that may exist.		X	X	X	X
11	Given a limit and/or precaution associated with the NS System, discuss it's basis and applicability.	X	X	X	X	X
12	List the power supplies of the NS Pumps.	X	X	X	X	

7.0 DRAWINGS

7.1. Containment Spray System, (6/13/97).

Objective #2

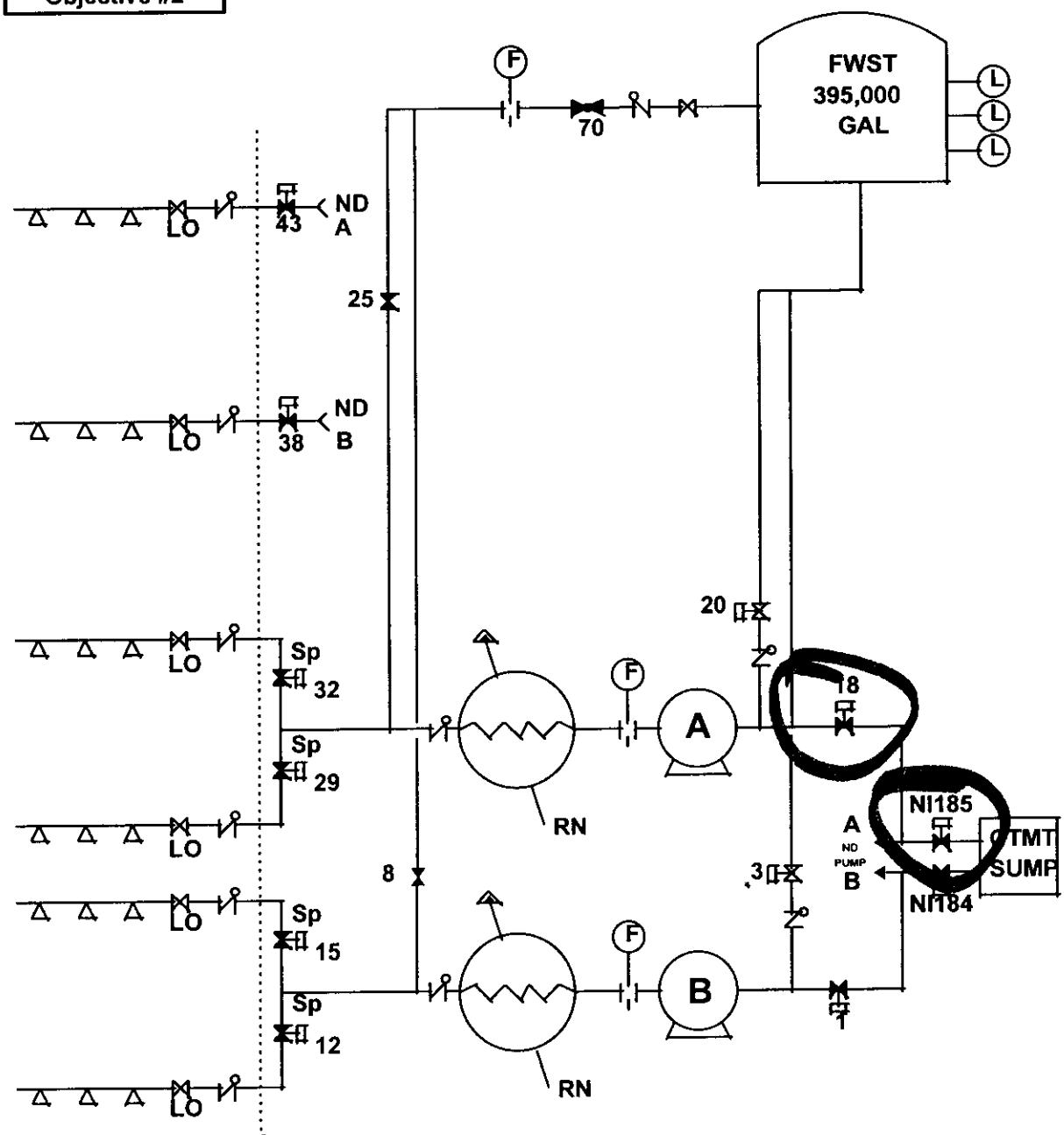

3.2. Abnormal and Emergency Operation

Objective #5, 6, 8

The Containment Spray System will be initiated either manually from the Control Room or on coincidence of two out of four High-High Containment Pressure signal. For either initiating signal, Containment Pressure must be at least 0.35 psig (CPCS Signal). An "Sp" signal will start the Containment Spray Pumps and open the discharge valves to the spray headers. If after an "Sp" signal, the containment pressure decreases to < .35 psig the containment spray pumps are automatically turned off and the discharge valves are automatically closed. If the pressure increases after the pumps have stopped, the Containment Pressure Control System will automatically open the discharge valves at $\geq$ .35 psig and if pressure continues to increase CPCS will restart the pumps at > 0.8 psig. This provides a deadband and prevents frequent cycling of the pumps. The pumps and valves will continue cycling, at these setpoints until the spray signal is reset.

If an "Sp" signal exists (containment spray has not been reset) and containment pressure decreases below .35 psig, the NS Pumps will stop and the pump discharge valves will close. If containment pressure increases above .35 psig (opening the valves), the pumps may be manually started from the control room.

The Residual Heat Removal System shifts from the injection phase to the recirculation phase automatically when the Refueling Water Storage Tank level reaches the low level alarm point (180"). If the automatic switchover fails, the operator is instructed to manually switch to the recirculation.

The NS pumps are manually aligned to the containment sump by the operator when the FWST reaches the low-low level alarm point (33"). When the FWST low-low level alarm is received, the operator has about 45 seconds to stop the NS Pumps before pump vortexing (air entrainment) begins. This 45 seconds assumes that both NS Pumps are running and some conservative assumptions on vortexing phenomena.

The spray flow from the Residual Heat Removal Pumps is initiated to assure adequate spray to counteract any rise in Containment pressure that might occur after all the ice has melted. FSAR Figure 6-12 shows the ice melt transient lasting about one hour.

NS System CPCS Failures (EP/1/A/5000/FR-Z.1, Enclosure 2)

Objective #3

In the event of a CPCS malfunction, some local operator actions may be required. A malfunction may require the operator to locally place valves in the desired position. Other malfunctions may require obtaining keys from the key locker, and proceeding to the CPCS Cabinet (Auxiliary Building, 750 - Train A, 733 - Train B, Electrical Penetration Room). Here the key would be used to place the appropriate control switch for the malfunctioning component in the "TEST" position. The test potentiometer would then be adjusted until the component responded as desired.

1 Pt.

Unit 1 is operating a 100% power when Steam Generator 'A' Channel 1 level loses power. No operator actions have been taken.

Of the remaining channels, _____ is the MINIMUM number of channels that have to trip to cause a Feedwater Isolation Actuation, and _____is the MINIMUM number of channels that have to trip to cause and Auxiliary Feedwater Actuation?

Reference Provided

	Signal	Channels needed to actuate
A.	**Feedwater Isolation**	**1**
	AFW Actuation	**1**
B.	**Feedwater Isolation**	**1**
	AFW Actuation	**2**
C.	**Feedwater Isolation**	**2**
	AFW Actuation	**1**
D.	**Feedwater Isolation**	**2**
	AFW Actuation	**2**

Bank Question: 1132 ***Answer: C***

1 Pt. Unit 1 is operating a 100% power when Steam Generator 'A' Channel 1 level loses power. No operator actions have been taken.

Of the remaining channels, _____ is the MINIMUM number of channels that have to trip to cause a Feedwater Isolation Actuation, and _____is the MINIMUM number of channels that have to trip to cause and Auxiliary Feedwater Actuation?

Reference Provided
1SI-5

	Signal	Channels needed to actuate
A.	**Feedwater Isolation**	**1**
	AFW Actuation	**1**
B.	**Feedwater Isolation**	**1**
	AFW Actuation	**2**
C.	**Feedwater Isolation**	**2**
	AFW Actuation	**1**
D.	**Feedwater Isolation**	**2**
	AFW Actuation	**2**

Distracter Analysis:. The student must realize this ESFAS channel fails to the tripped condition on a loss of power. Then realize the AFW Actuation is 2/4 logic to actuate, so only one more channel required. For the FW Isolation, must realize it's 2/3 logic, so failed channel may not be one of the three. Then make the connection the provided 1SI-05 Status Light Panel provides the information the failed channel is not in this logic, so two of the remaining three channels would be required to actuate.

A. **Incorrect**:
Plausible:
B. **Incorrect**:
Plausible:
C. **Correct**:
D. **Incorrect**
Plausible:

LEVEL: RO & SRO

KA: 013 K6.01 (2.7*/3.1*)

SOURCE: Bank Prairie Island NRC Exam 2003

LEVEL OF KNOWLEDGE: Analysis

AUTHOR: CWS

LESSON: OP-MC-ECC-ISE
OP-MC-CF-CA
OP-MC-SF-C07

OBJECTIVES: OP-MC-ECC-ISE, obj 13
OP-MC-CF-CA, obj 4
OP-MC-SF-C07, Exercise Guide Term obj

REFERENCES: OP-MC-ECC-ISE, pg 33
OP-MC-CF-CA, pg 13
OP-MC-SF-C07, pg 2 & 5
1SI-05 Status Light Panel

SYSTEM:	**013 Engineered Safety Features Actuation System (ESFAS)**		
K6	**Knowledge of the effect of a loss or malfunction on the following will have on the ESFAS:** (CFR: 41.7 / 45.5 to 45.8)		
K6.01	Sensors and detectors	2.7*	3.1*
K6.02	Controllers and positioners	2.2	2.6
K6.03	Breakers, relays, and disconnects	2.4	2.9
K6.04	Trip setpoint calculators	2.4*	2.7*
	ABILITY		
A1	**Ability to predict and/or monitor changes in parameters (to Prevent exceeding design limits) associated with operating the ESFAS controls including:** (CFR: 41.5 / 45.5)		
A1.01	RCS pressure and temperature	4.0	4.2
A1.02	Containment pressure, temperature, and humidity	3.9	4.2
A1.03	Feedwater header differential	2.6*	2.6*
A1.04	S/G level	3.4	3.6
A1.05	Main steam pressure	3.4	3.6
A1.06	RWST level	3.6	3.9
A1.07	Containment radiation	3.6	3.9
A1.08	Containment sump level	3.7	3.8
A1.09	T-hot	3.4	3.7
A1.10	T-cold	3.4	3.7
A2	**Ability to (a) predict the impacts of the following malfunctions or operations on the ESFAS; and (b) based Ability on those predictions, use procedures to correct, control, or mitigate the consequences of those malfunctions or operations;** (CFR: 41.5 / 43.5 / 45.3 / 45.13)		
A2.01	LOCA	4.6	4.8
A2.02	Excess steam demand	4.3	4.5
A2.03	Rapid depressurization	4.4	4.7
A2.04	Loss of instrument bus	3.6	4.2
A2.05	Loss of dc control power	3.7	4.2
A2.06	Inadvertent ESFAS actuation	3.7*	4.0
A3	**Ability to monitor automatic operation of the ESFAS including:** (CFR: 41.7 / 45.5)		
A3.01	Input channels and logic	3.7*	3.9
A3.02	Operation of actuated equipment	4.1	4.2
A3.03	Continuous testing feature	2.4*	2.7*

	OBJECTIVE	NLO	NLOR	LPRO	LPSO	LOR
13	List the setpoints, permissives, and logic required to initiate the following: • Containment Spray (NS) Actuation • Phase "B" Isolation • Main Steam Isolation (MSI) • Main Feedwater Isolation (FWI)		X	X	X	X
14	Explain the relationship between SSPS Testing and the operability of the Systems and functions actuated from the Engineered Safety Features Actuation System.		X	X	X	X
15	Discuss the purpose of the ESF Monitor Lite Panel (BOP Panel).		X	X	X	
16	Concerning AP/1 or 2/A/5500/35, ECCS Actuation During Plant Shutdown. • State the purpose of the AP. • Recognize the symptoms that would require implementation of the AP.		X	X	X	X
17	Concerning the Technical Specifications related to the Engineered Safeguards Actuation System: • Given the LCO title, state the LCO (including any COLR values) and applicability. • For any LCO's that have action required within one hour, state the action. • Given a set of parameter values or system conditions, determine if any Tech Spec LCO's is (are) not met and any action(s) required within one hour. • Given a set of plant parameters or system conditions and the appropriate Tech Specs, determine required actions. • Discuss the bases for a given Tech Spec LCO or Safety Limit. * - SRO Only			X X X	X X X X X	X X X X *

Objective # 13

Main Feedwater Isolation (FWI) is initiated by:

- **Safety Injection (S_S)**
- **Reactor trip and low T-avg (P-4 and 553°F on $^2/_4$ channels)**
- **High High S/G level 83% on $^2/_3$ channels on $^1/_4$ S/G (P-14)**
- **Manually ($^1/_2$ pushbuttons)**

Feedwater Isolation (FWI) Initiating Signal Automatic Actions to CF (Main Feedwater)

S_S (Safety Injection)

- FWI (Feedwater Isolation)
- Turbine trip
- Both FWPT's trip

P-4 and Low T-avg

- FWI (Feedwater Isolation)
- P-4 generates turbine trip
- FWPT's rollback hold

P-14

- FWI (Feedwater Isolation)
- Turbine trip
- Both FWPT's trip

Manual

- FWI (Feedwater Isolation)
- FWPT's rollback hold

Valves that close from FWI (Feedwater Isolation) signal

- S/G CF Control Valves (CF-32, 23, 20, 17)
- S/G CF Control Valve Bypasses (CF-104, 105, 106, 107)
- S/G CF Containment Isolations (CF-35, 30, 28, 26)
- CF to CA Nozzle Isolations (CF-126, 127, 128, 129)

CLASSROOM TIME (Hours)

NLO	NLOR	LPRO	LPSO	LOR
3.0	2.0	3.0	3.0	1.5

OBJECTIVES

	OBJECTIVE	NLO	NLOR	LPRO	LPSO	LOR
1	State the purpose of the CA System.	X	X	X	X	
2	Sketch the system drawing (Fig. 7.1) including all major components and valves, show all tie-ins to associated systems.	X	X	X	X	
3	Describe all CA suction supply sources, including venting requirements and actions.	X	X	X	X	
4	Discuss the auto-start of the motor driven and turbine driven auxiliary feedwater pumps, including concurrent BO/S_S signals and BO followed by S_S.	X	X	X	X	X
5	Describe the CA pump minimum flow and pump runout protection.	X	X	X	X	
6	Describe the function of the Auto Start Defeat Switches; include permissives.	X	X	X	X	X
7	Describe the power supplies and steam supplies for the CA pumps.	X	X	X	X	
8	State the flow rates of the CA pumps.	X	X	X	X	
9	Describe the sources of make-up to the Auxiliary Feedwater Storage Tank, include destination of overflow from the Auxiliary Feedwater Storage Tank.	X	X	X	X	X
10	Describe the interlock between the CA motor driven pump and the associated train RN pump. Include why the interlock is required.	X	X	X	X	X
11	Describe the interlock between the CA pump suction pressure and the RN assured makeup valves.	X	X	X	X	X
12	Describe the interlock between the RN assured makeup valves (CA-15, CA-18) and the DG Hx Inlet Valve. Include why the interlock is required.	X	X	X	X	X

1.0 INTRODUCTION

1.1 Purpose

Objective # 1

The auxiliary feedwater system is provided as a backup for the main feedwater system. It is designed as a means to dissipate heat from the Reactor Coolant System when normal systems are not available. The auxiliary feedwater system may also be used in normal plant startup and shutdown, as main feedwater, when the flow is less than 3% maximum design feedwater flow.

1.2 General Description

Objective # 2

Refer to Figure 7.1, 7.2, 7.3, 7.13. The CA system assures required feedwater flow to the steam generators for reactor coolant thermal energy dissipation when the CF system is not available through loss of power or other malfunctions. The CA system is required to operate until normal feedwater flow is restored or until the reactor coolant temperature is lowered to the point where the ND system can be utilized. The CA system is designed to start automatically for any event requiring emergency feedwater. Since the CA system is the only source of makeup water to the steam generators for reactor coolant heat removal when the main feedwater system becomes inoperable, it has been designed with redundancy and diversity. The CA system contains two motor driven pumps and one steam turbine driven pump for each unit.

2.0 COMPONENT DESCRIPTION

2.1 Motor Driven CA Pumps

Objective # 4, 7, 8

The motor driven CA pumps are powered from essential power, ETA (pump A) and ETB (pump B). Each motor driven pump has a design flow rate of 450 gpm and is capable of supplying two steam generators. CA pump "A" supplies steam generators "A" and "B" while CA pump "B" supplies steam generators "C" and "D."

Refer to Figure 7.12. The auto-start signals for the CA Motor Driven pumps are:

- 2/4 detectors low-low level in any one SG (17%)
- Trip of both Main Feedwater pumps
- AMSAC
    - Both Feedwater pumps tripped
    - Loss of flow to 3/4 SGs
- S_S signal
- Blackout signal

STEAM GENERATOR LEVEL CONTROL

EXERCISE TERMINAL OBJECTIVE(S)

This exercise will familiarize the trainee with the operation of the Steam Generator Level Control System during normal and abnormal operation. The trainees will demonstrate evaluation and diagnostic skills.

LENGTH OF EXERCISE

3.0 HOURS

REFERENCES

1. Operating Experience
   - PIP-M01-00400
2. MNS Procedures
   - OP/1/A/6100/03, Encl.4.1 Power Increase
   - OP/1/A/6100/03, Encl. 4.2 Power Reduction
   - OP/1/A/6100/010E, Annunciator Response for Panel 1AD4
   - AP/1/A/5500/16, Case III Power Range Malfunction

COMMITMENTS

None

EXERCISE DESCRIPTION

The following activities associated with the S/G Level Control System are covered:

- Identification of related indications and controls, annunciators and status light.
- Evaluation of operation during power changes
- Manual operation of S/G CF Control valves and Bypass valves
- Transfer to and from S/G CF Control valves and Bypass valves
- Demonstration of shrink and swell
- Evaluation of control system input failures
- Diagnosis of control system input failures

C. *Status lights on 1SI-5*

- A/1, B/1, C/1, D/1
- A/2, B/2, C/2, D/2
- B/3, C/3, D/3
- A/4, C/4, D/4
- A/5, C/5, D/5
- B/6, C/6, D/6

D. *Annunciators on 1AD-4*

- A/1, A/2, A/3, A/4
- B/1, B/2, B/3, B/4
- C/1, C/2, C/3, C/4
- D/1, D/2, D/3, D/4
- E/1, E/2, E/3, E/4
- F/1, F/2, F/3, F/4, F/5

E. *Annunciators on 1AD-5*

- A/6, B/6, C/6, D/6

3.1.2 Evaluation of S/G Level Control System Operation

	Simulator to **RUN**	

INSTRUCTOR

A. With DEH in automatic, increase unit load to 200MWE at 10 MWE/min.

B. Point out the following as unit load increases.

- CF Control Valves controllers output increasing
- S/G level setpoint increasing
- Increasing steam flow
- Increasing feed flow

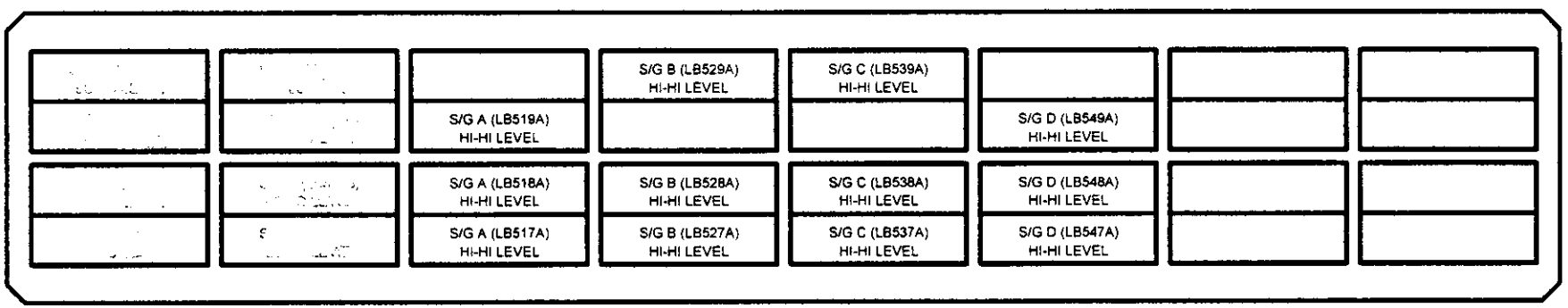
S/G B (LB529A)
HI-HI LEVEL
S/G C (LB539A)
HI-HI LEVEL
S/G A (LB519A)
HI-HI LEVEL
S/G D (LB549A)
HI-HI LEVEL
S/G A (LB518A)
HI-HI LEVEL
S/G B (LB528A)
HI-HI LEVEL
S/G C (LB538A)
HI-HI LEVEL
S/G D (LB548A)
HI-HI LEVEL
S/G A (LB517A)
HI-HI LEVEL
S/G B (LB527A)
HI-HI LEVEL
S/G C (LB537A)
HI-HI LEVEL
S/G D (LB547A)
HI-HI LEVEL

1SI-5

..013.K6.01 | 10/3/2003

Prairie Island 1 | Exam Level R | Mark Question | Print Recor | New Searc | Exit

Question

Unit 1 is operating at 100% Reactor power when 12 Steam Generator RED channel level transmitter (1LT-461) loses power. NO operator actions have yet been taken.

Of the remaining channels, _____ is the MINIMUM number of channels that have to trip to cause a Feedwater Isolation Actuation, and _____ is the MINIMUM number of channels that have to trip to cause a Auxiliary Feedwater Actuation.

	FEEDWATER ISOLATION	AFW ACTUATION
Answer:	1	1
Distracter 1	1	2
Distracter 2	2	1
Distracter 3	2	2

Distracter Analysis:

Answer:

Distracter 1:

Distracter 2:

Distracter 3:

..013.K6.01 | 10/29/2001

Braidwood 1 | Exam Level R | Mark Question | Print Recor | New Searc | Exit

Question

The plant is operating at 100% Reactor power. Containment Pressure Channel 1PT-937 fails HIGH. NO operator actions have yet been taken. Of the remaining channels, ___(1)___ is the MINIMUM number of channels that have to trip to cause a Containment Spray Actuation, and ___(2)____ is the MINIMUM number of channels that have to trip to cause a Main Steam Isolation.

___(1)___ ___(2)___

Answer: ONE TWO

Distracter 1 TWO ONE

Distracter 2 ONE ONE

Distracter 3 TWO TWO

Distracter Analysis:

Answer:

Distracter 1:

Distracter 2:

Distracter 3:

1 Pt. Upon receipt of a P-14 signal which of the following describes a complete feedwater isolation from the Steam Generators?

A. **Main Steam Isolation Valves close**
Main Feedwater Pumps go to roll back hold
S/G CF Control Valves close
S/G CF Containment Isolations close.

B. **Main Steam Isolation Valves close**
S/G CF Control Valves close
S/G CF Control Valve Bypasses close
S/G CF Containment Isolations close

C. **Main Feedwater Pumps go to rollback hold**
S/G CF Control Valves close
S/G CF Containment Isolations close
CF to CA Nozzle Isolations close

D. **S/G CF Control Valves close**
S/G CF Control Valve Bypasses close
S/G CF Containment Isolations close
CF to CA Nozzle Isolations close

Bank Question: 1133 ***Answer: D***

1 Pt. Upon receipt of a P-14 signal which of the following ~~describes a complete feedwater isolation from the Steam Generators?~~ occurs.

A. **Main Steam Isolation Valves close**
Main Feedwater Pumps go to roll back hold
S/G CF Control Valves close
S/G CF Containment Isolations close.

B. **Main Steam Isolation Valves close**
S/G CF Control Valves close
S/G CF Control Valve Bypasses close
S/G CF Containment Isolations close

C. **Main Feedwater Pumps go to rollback hold**
S/G CF Control Valves close
S/G CF Containment Isolations close
CF to CA Nozzle Isolations close

D. **S/G CF Control Valves close**
S/G CF Control Valve Bypasses close
S/G CF Containment Isolations close
CF to CA Nozzle Isolations close

Distracter Analysis:. Must realize the Main steam Isolation Valves do not close on high level. Also, the Main Feedwater Pumps go to roll back hold on a reactor trip signal, not FW Isolation signal

A. **Incorrect**:
Plausible:

B. **Incorrect**:
Plausible:

C. **Incorrect**:
Plausible:

D. **Incorrect**
Plausible:

LEVEL: RO

KA: 059 A3.06 (3.2/3.3)

SOURCE: BANK Cook 1, NRC EXAM 2001

LEVEL OF KNOWLEDGE: Memory

AUTHOR: CWS

LESSON: OP-MC-CF-CF

OBJECTIVES: OP-MC-CF-CF, Obj.13

REFERENCES: OP-MC-CF-CF page 33

SYSTEM: **Main Feedwater (MFW) System**

A2	**Ability to (a) predict the impacts of the following malfunctions or operations on the MFW; and (b) based on those predictions, use procedures to correct, control, or mitigate the consequences of those malfunctions or operations:** (CFR: 41.5 / 43.5 / 45.3 / 45.13)		
A2.01	Feedwater actuation of AFW system	3.4*	3.6*
A2.02	Loss of feedwater heater	2.2*	2.5*
A2.03	Overfeeding event	2.7	3.1*
A2.04	Feeding a dry S/G	2.9*	3.4*
A2.05	Rupture in MFW suction or discharge line	3.1*	3.4*
A2.06	Loss of steam flow to MFW system	2.7*	2.9*
A2.07	Tripping of MFW pump turbine	3.0*	3.3*
A2.08	Extremely low MFW pump control lube oil or bearing oil pressure	1.9	2.2*
A2.09	Overspeed on turning gear	1.6	1.8
A2.10	Secondary cooling water	1.7	1.8
A2.11	Failure of feedwater control system	3.0*	3.3*
A2.12	Failure of feedwater regulating valves	3.1*	3.4*
A2.13	Loss of condensate/heater draining flow	2.1*	2.1*
A3	**Ability to monitor automatic operation of the MFW, including:** (CFR: 41.7 / 45.5)		
A3.01	Valve timer display	2.0*	2.1*
A3.02	Programmed levels of the S/G	2.9	3.1
A3.03	Feedwater pump suction flow pressure	2.5	2.6*
A3.04	Turbine driven feed pump	2.5*	2.6*
A3.05	Starts and stops on the main feed pumps	2.4*	2.7*
A3.06	Feedwater isolation	3.2*	3.3
A3.07	ICS	3.4*	3.5*
A4	**Ability to manually operate and monitor in the control room:** (CFR: 41.7 / 45.5 to 45.8)		
A4.01	MFW turbine trip indication	3.1*	3.1*
A4.02	Null out MFW pump D/P differences	2.3*	2.4*
A4.03	Feedwater control during power increase and decrease	2.9*	2.9
A4.04	Reset MFW overspeed trip	2.2*	2.3*
A4.05	MFW pump oil cooler, cooling water outlet valve controller	1.7	1.8
A4.06	MFW pump turbine reset switch	2.4*	2.3*
A4.07	Valve timer reset pushbutton	2.0*	1.9*
A4.08	Feed regulating valve controller	3.0*	2.9*
A4.09	Remote determination of operating feedwater pump turning gear	2.1*	2.0*
A4.10	ICS	3.9*	3.8*
A4.11	Recovery from automatic feedwater isolation	3.1	3.3
A4.12	Initiation of automatic feedwater isolation	3.4	3.5

SEQ	OBJECTIVE	NLO	NLOR	LPRO	LPSO	LOR
11	Explain why and how CF flow is transferred from the CF nozzle to the CA nozzle and vise versa.	X	X	X	X	
12	Explain the Feedwater Isolation actuation circuit.	X	X	X	X	X
13	List the CF valves that isolate on a Feedwater Isolation Signal.	X	X	X	X	X
14	Describe the automatic actions that occurs on: • Hi Hi Doghouse Level • Hi Hi S/G Level (P-14).	X	X	X	X	X
15	Explain the purpose of the "Anticipated Transient Without Scram Mitigation System Actuation Circuitry" (AMSAC).	X	X	X	X	X
16	Concerning AMSAC: • State the automatic action that occurs as a result of an AMSAC signal • List the parameters that will actuate the AMSAC automatic actions • Discuss the development of the actuation signals, to include the components monitored and setpoints.	X	X	X	X	X
17	Concerning the AMSAC Block/Unblock switch: • State the purpose of each position (Block and Unblock) • State when each position may be used. • Differentiate between the "Manual" block function and "Auto" block functions (include the 2 minute time delay for auto blocking).	X	X	X	X	X

1 If directed by OSM, manually raise and maintain the associated S/G level greater than 45% NR while aligning the CA nozzle.

2 Places the CF Pump Turbine to manual and raise CF header pressure to 1250 to 1325 psig.

3 Open the CA nozzle isolation valve and then close the associated CF containment isolation valve one S/G at a time.

2.9 Feedwater Isolation (FWI)

Objective #12

Feedwater isolation is designed to:

- Prevent overheating Containment in the event of a feedwater or main steam pipe rupture in Containment.
- Limit the quantity of high energy fluid that enters containment through the secondary break.
- Assist in mitigating and reducing the NCS cool down resulting from a Steam Line Break.
- Provide isolation to the Auxiliary Feedwater Nozzle from CF.
- Prevent flooding of Safety Related equipment in the Doghouses.
- The Check Valve outside containment prevents multiple S/G's blowing down and NCS over cooling in the event of FWI failure.
- Ensure containment integrity is maintained.
- Prevent overfill condition on the S/G's.

A Feedwater isolation will occur if any one of the following conditions occur (refer to Drawing 7.9 and 7.10):

- S_S - Safety Injection actuation
- P14 - Hi Hi S/G level (83% on 2 / 3 channels on 1 / 4 S/Gs)
- Reactor trip with low T_{ave} (P-4 and 553°F on 2 / 4 loops)
- Manual Feedwater Isolation actuation (1 / 2 pushbuttons)

Objective #13

When Feedwater isolation actuates, the following valves will close (refer to Drawing 7.2):

- S/G CF Control Valves (CF-32, 23, 20, 17)
- S/G CF Control Bypass Valves (CF-104, 105, 106, 107)
- S/G CF Containment Isolation Valves (CF-35, 30, 28, 26)
- S/G CF to CA Nozzle Isolation Valves (CF-126, 127, 128, 129)

..059.a3.06 49Wi`ö@ü`i@è`i@ü`i@ü`i@ü @i@ 5/21/2001

Cook 1 **Exam Level** R

Mark Question | Print Recor | New Searc | Exit

Question On receipt of an SI signal, which of the following represents a complete feedwater system isolation from the steam generators?

Answer: main feedwater pump trips, main feedwater pump discharge valves close, main feedwater isolation valves close, feed regulating valves close

Distracter 1 main feedwater pump trips, main feedwater isolation valves close, high pressure heater inlet isolation valves close, main steam stop valves close

Distracter 2 main feedwater pump discharge valves close, main feedwater isolation valves close, high pressure heater bypass valve closes, feed regulating valves close

Distracter 3 main feedwater pump discharge valves close, main feedwater isolation valves close, main feedwater pump trips, main steam stop valves close

Distracter Analysis:

Answer:

Distracter 1:

Distracter 2:

Distracter 3:

1 Pt. Given the following indications on Unit 1:

- Power Range N41 is reading 51%
- Power Range N42 is reading 52%
- Power Range N43 is reading 50%
- Power Range N44 has failed

Power Range N44 has been removed from service per AP/16 (Malfunction of Nuclear Instrumentation).

Which one of the following describes how Steam Generator Program level is being controlled?

A. **N41 controlling S/Gs A and D**
N42 controlling S/Gs B and C

B. **N41 controlling S/Gs A and B**
N42 controlling S/Gs C and D

C. **N41 controlling S/Gs A, B, C, and D**

D. **N42 controlling S/Gs A, B, C, and D**

Bank Question: 1134 **Answer: C**

1 Pt. Given the following indications on Unit 1:

- Power Range N41 is reading 51%
- Power Range N42 is reading 52%
- Power Range N43 is reading 50%
- Power Range N44 has failed

Power Range N44 has been removed from service per AP/16 (Malfunction of Nuclear Instrumentation).

Which one of the following describes how Steam Generator Program level is being controlled?

A. **N41 controlling S/Gs A and D**
N42 controlling S/Gs B and C

B. **N41 controlling S/Gs A and B**
N42 controlling S/Gs C and D

C. **N41 controlling S/Gs A, B, C, and D**

D. **N42 controlling S/Gs A, B, C, and D**

Distracter Analysis:. The student must realize that the auctioneered high channel of the selected pair sets the program setpoint.

A. **Incorrect**:
Plausible:

B. **Incorrect**:
Plausible:

C. **Incorrect**:
Plausible:

D. **Incorrect**
Plausible:

LEVEL: RO & SRO

KA: 059 A3.02 (2.9/3.1)

SOURCE: NEW

LEVEL OF KNOWLEDGE: Comprehension

AUTHOR: CWS

LESSON: OP-MC-CF-IFE

OBJECTIVES: OP-MC-CF-IFE Obj. 6

REFERENCES: OP-MC-CF-IFE page 19

SYSTEM:	**Main Feedwater (MFW) System**		
A2	**Ability to (a) predict the impacts of the following malfunctions or operations on the MFW; and (b) based on those predictions, use procedures to correct, control, or mitigate the consequences of those malfunctions or operations:** (CFR: 41.5 / 43.5 / 45.3 / 45.13)		
A2.01	Feedwater actuation of AFW system	3.4*	3.6†
A2.02	Loss of feedwater heater	2.2*	2.5*
A2.03	Overfeeding event	2.7	3.1*
A2.04	Feeding a dry S/G	2.9*	3.4*
A2.05	Rupture in MFW suction or discharge line	3.1*	3.4*
A2.06	Loss of steam flow to MFW system	2.7*	2.9*
A2.07	Tripping of MFW pump turbine	3.0*	3.3*
A2.08	Extremely low MFW pump control lube oil or bearing oil pressure	1.9	2.2*
A2.09	Overspeed on turning gear	1.6	1.8
A2.10	Secondary cooling water	1.7	1.8
A2.11	Failure of feedwater control system	3.0*	3.3*
A2.12	Failure of feedwater regulating valves	3.1*	3.4*
A2.13	Loss of condensate/heater draining flow	2.1*	2.1*
A3	**Ability to monitor automatic operation of the MFW, including:** (CFR: 41.7 / 45.5)		
A3.01	Valve timer display	2.0*	2.1*
A3.02	Programmed levels of the S/G	2.9	3.1
A3.03	Feedwater pump suction flow pressure	2.5	2.6*
A3.04	Turbine driven feed pump	2.5*	2.6*
A3.05	Starts and stops on the main feed pumps	2.4*	2.7*
A3.06	Feedwater isolation	3.2*	3.3
A3.07	ICS	3.4*	3.5*
A4	**Ability to manually operate and monitor in the control room:** (CFR: 41.7 / 45.5 to 45.8)		
A4.01	MFW turbine trip indication	3.1*	3.1*
A4.02	Null out MFW pump D/P differences	2.3*	2.4*
A4.03	Feedwater control during power increase and decrease	2.9*	2.9
A4.04	Reset MFW overspeed trip	2.2*	2.3*
A4.05	MFW pump oil cooler, cooling water outlet valve controller	1.7	1.8
A4.06	MFW pump turbine reset switch	2.4*	2.3*
A4.07	Valve timer reset pushbutton	2.0*	1.9*
A4.08	Feed regulating valve controller	3.0*	2.9*
A4.09	Remote determination of operating feedwater pump turning gear	2.1*	2.0*
A4.10	ICS	3.9*	3.8*
A4.11	Recovery from automatic feedwater isolation	3.1	3.3
A4.12	Initiation of automatic feedwater isolation	3.4	3.5

CLASSROOM TIME (Hours)

NLO	NLOR	LPRO	LPSO	LOR
NA	2	2	2	2

OBJECTIVES

	OBJECTIVE	NLO	NLOR	LPRO	LPSO	LOR
1.	State the purpose of the S/G Level Control System.		X	X	X	
2.	Draw the S/G Level Control System per training handout MC-CF-IFE-5.		X	X	X	
3.	Draw the S/G Level Program per training handout MC-CF-IFE-4and label all axis.		X	X	X	
4.	Explain the phenomenon of S/G level shrink and swell.		X	X	X	
5.	Explain the reasons for S/G minimum and maximum water levels, including how this relates to S/G programmed level.		X	X	X	X
6.	Discuss the input signals to the S/G level error, FF-SF mismatch, and the Nuclear Power controlling circuit.		X	X	X	X
7.	Describe the operation of the valves controlled by S/G Level Control System.		X	X	X	X
8.	Evaluate plant parameters and status indicators to determine any abnormal system conditions that may exist.			X	X	X
9.	Describe the protection (signals and setpoints) associated with S/G level. (logic not required)		X	X	X	X
10.	Describe the controls and indications associated with the S/G Level Control System.		X	X	X	X
11.	For any S/G Level Control System input signal failure, determine the effect and evaluate operator action to be taken.			X	X	X

2.2. Steam Generator Level Error

2.2.1. Purpose is to provide a level error signal based upon the difference between program level (based upon nuclear power) and actual level.

Objective #6 & #10

2.2.2. Program Level

The programmed Level Setpoint is calculated for each steam generator as a function of nuclear power (Refer to Figure 2, Nuclear Power High Select Circuit, below). The nuclear power signal is derived from the Nuclear Instrumentation System power range channels. Channels N-41/ 43 (auctioneered high) provide S/G A&D program and Channels N-42/ 44 (auctioneered high) provide S/G B&C program. This is provided the 'PR TO SG PROGRAM LEVEL CHANNEL DEFEAT' select switch is in the 'NORMAL' position. If the need arises, Channels N-41/43 can feed all four S/G level programs, by going to the 'Defeat 42-44' position, or Channels N-42/44 can feed all four S/G programs by going to the 'Defeat 41-43' position.

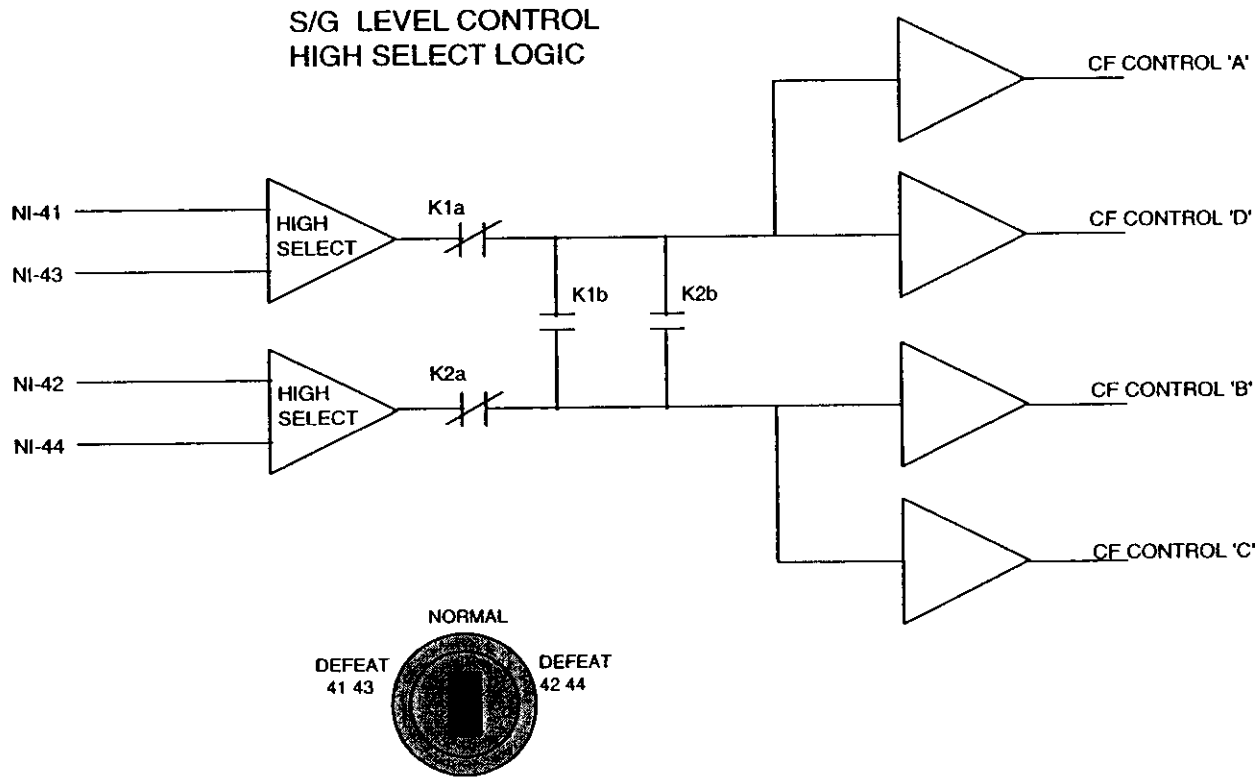

FIGURE 2, NUCLEAR POWER HIGH SELECT CIRCUIT (MC-CF-IFE-2) 3/31/95

T.S. REFERENCE MANUAL

1 Pt. Which one of the following is the power supply to the '1A' Auxiliary Feedwater Pump?

A. 1ETA

B. 1EMXA

C. ~~2ETA~~ 1TA

D. ~~2EMXA~~ 1EMXH

Bank Question: 1135 **Answer: A**

1 Pt. Which one of the following is the power supply to the '1A' Auxiliary Feedwater Pump?

A. 1ETA

B. 1EMXA

C. 2ETA

D. 2EMXA

Distracter Analysis:.

A. Correct:
B. Incorrect:
Plausible:
C. Incorrect:
Plausible:
D. Incorrect
Plausible:

LEVEL: RO & SRO

KA: 061 K2.03 (4.0*/3.8*)

SOURCE: NEW

LEVEL OF KNOWLEDGE: Memory

AUTHOR: CWS

LESSON: OP-MC-CF_CA

OBJECTIVES: OP-MC-CF-CA Obj. 7

REFERENCES: OP-MC-CF-CA page 13

061 Auxiliary / Emergency Feedwater (AFW) System

TASK:

Perform lineups of the AFW system
Perform AFW system operability demonstration
What if the AFW system did not operate properly automatically?
Fill and vent the AFW system
Auxiliary feed pump failure due to improper valve lineup
Start the AFW system
Perform AFW automatic actuation test
Feed steam generators with AFW system
Perform S/G auxiliary feed pump test
Operate motor driven AFW pumps
Perform S/G auxiliary feed pump flow capacity test
Operate turbine driven AFW pumps
Perform testing of AFW check valves
Shift auxiliary feed pump suction
Perform exercise of AFW MOVs test
Overspeed test the auxiliary feed pump turbine
shut down the AFW system
Drain the AFW pump turbine and steam supply header

K/A NO.	KNOWLEDGE	IMPORTANCE RO	SRO
K1	**Knowledge of the physical connections and/or cause-effect relationships between the AFW and the following systems:** (CFR: 41.2 to 41.9 / 45.7 to 45.8)		
K1.01	S/G system	4.1	4.1
K1.02	MFW System	3.4	3.7
K1.03	Main steam system	3.5	3.9
K1.04	RCS	3.9	4.1
K1.05	Condensate system	2.6*	2.8*
K1.06	Cooling water	2.4*	2.6*
K1.07	Emergency water source	3.6	3.8
K1.08	Chemical treatment	2.1	2.3*
K1.09	PRMS	2.6*	2.8*
K1.10	Diesel fuel oil	2.6*	2.7*
K1.11	AFW turbine exhaust drains	2.7	2.8*
K2	**Knowledge of bus power supplies to the following:** (CFR: 41.7)		
K2.01	AFW system MOVs	3.2*	3.3
K2.02	AFW electric drive pumps	3.7*	3.7
K2.03	AFW diesel driven pump	4.0*	3.8*

CLASSROOM TIME (Hours)

NLO	NLOR	LPRO	LPSO	LOR
3.0	2.0	3.0	3.0	1.5

OBJECTIVES

	OBJECTIVE	NLO	NLOR	LPRO	LPSO	LOR
1	State the purpose of the CA System.	X	X	X	X	
2	Sketch the system drawing (Fig. 7.1) including all major components and valves, show all tie-ins to associated systems.	X	X	X	X	
3	Describe all CA suction supply sources, including venting requirements and actions.	X	X	X	X	
4	Discuss the auto-start of the motor driven and turbine driven auxiliary feedwater pumps, including concurrent BO/S_S signals and BO followed by S_S.	X	X	X	X	X
5	Describe the CA pump minimum flow and pump runout protection.	X	X	X	X	
6	Describe the function of the Auto Start Defeat Switches; include permissives.	X	X	X	X	X
7	Describe the power supplies and steam supplies for the CA pumps.	X	X	X	X	
8	State the flow rates of the CA pumps.	X	X	X	X	
9	Describe the sources of make-up to the Auxiliary Feedwater Storage Tank, include destination of overflow from the Auxiliary Feedwater Storage Tank.	X	X	X	X	X
10	Describe the interlock between the CA motor driven pump and the associated train RN pump. Include why the interlock is required.	X	X	X	X	X
11	Describe the interlock between the CA pump suction pressure and the RN assured makeup valves.	X	X	X	X	X
12	Describe the interlock between the RN assured makeup valves (CA-15, CA-18) and the DG Hx Inlet Valve. Include why the interlock is required.	X	X	X	X	X

1.0 INTRODUCTION

1.1 Purpose

Objective # 1

The auxiliary feedwater system is provided as a backup for the main feedwater system. It is designed as a means to dissipate heat from the Reactor Coolant System when normal systems are not available. The auxiliary feedwater system may also be used in normal plant startup and shutdown, as main feedwater, when the flow is less than 3% maximum design feedwater flow.

1.2 General Description

Objective # 2

Refer to Figure 7.1, 7.2, 7.3, 7.13. The CA system assures required feedwater flow to the steam generators for reactor coolant thermal energy dissipation when the CF system is not available through loss of power or other malfunctions. The CA system is required to operate until normal feedwater flow is restored or until the reactor coolant temperature is lowered to the point where the ND system can be utilized. The CA system is designed to start automatically for any event requiring emergency feedwater. Since the CA system is the only source of makeup water to the steam generators for reactor coolant heat removal when the main feedwater system becomes inoperable, it has been designed with redundancy and diversity. The CA system contains two motor driven pumps and one steam turbine driven pump for each unit.

2.0 COMPONENT DESCRIPTION

2.1 Motor Driven CA Pumps

Objective # 4, 7, 8

The motor driven CA pumps are powered from essential power, ETA (pump A) and ETB (pump B). Each motor driven pump has a design flow rate of 450 gpm and is capable of supplying two steam generators. CA pump "A" supplies steam generators "A" and "B" while CA pump "B" supplies steam generators "C" and "D."

Refer to Figure 7.12. The auto-start signals for the CA Motor Driven pumps are:

- 2/4 detectors low-low level in any one SG (17%)
- Trip of both Main Feedwater pumps
- AMSAC
    - Both Feedwater pumps tripped
    - Loss of flow to 3/4 SGs
- S_S signal
- Blackout signal

1 Pt. Which one of the following conditions will PREVENT the 2A Diesel Generator output breaker from closing in on 2ETA?

A. Normal incoming breaker overcurrent trip

B. Standby incoming breaker undervoltage trip

C. 2/3 undervoltage trip of normal incoming breaker

D. 2/3 degraded voltage trip of normal incoming breaker

Ground fault detected on 2ETA?

Bank Question: 1136 **Answer: A**

1 Pt. Which one of the following conditions will PREVENT the 2A Diesel Generator output breaker from closing in on 2ETA?

A. Normal incoming breaker overcurrent trip

B. Standby incoming breaker undervoltage trip

C. 2/3 undervoltage trip of normal incoming breaker

D. 2/3 degraded voltage trip of normal incoming breaker

Distracter Analysis:

A. **Correct**:
B. **Incorrect**: there is not undervoltage trip associated with the standby incoming breaker
Plausible:
C. **Incorrect**: this condition actually will open the normal breaker and allow for diesel generator breaker closure.
Plausible:
D. **Incorrect:** same a "C" above
Plausible: student may think degraded conditions on the bus would necessitate a bus lockout

LEVEL: RO & SRO

KA: SYS 062 K4.01 (2.6/3.2)

SOURCE: BANK Beaver Valley NRC Exam 2002

LEVEL OF KNOWLEDGE: Memory

AUTHOR: CWS

LESSON: OP-MC-DG-EQB

OBJECTIVES: OP-MC-DG-EQB Obj. 5

REFERENCES: OP-MC-DG-EQB pages 21 and 23

SYSTEM:	**062 AC Electrical Distribution System**		
K3.01	Major system loads	3.5	3.9
K3.02	ED/G	4.1	4.4
K3.03	DC system	3.7	3.9
K4	**Knowledge of ac distribution system design feature(s) and/or interlock(s) which provide for the following:** (CFR: 41.7)		
K4.01	Bus lockouts	2.6	3.2
K4.02	Circuit breaker automatic trips	2.5	2.7
K4.03	Interlocks between automatic bus transfer and breakers	2.8*	3.1
K4.04	Protective relaying	2.2	2.9
K4.05	Paralleling of ac sources (synchroscope)	2.7*	3.2
K4.06	One-line diagram of 6.9kV distribution, including sources of normal and alternative power	2.9*	3.3*
K4.07	One-line diagram of 4kV to 480V distribution, including sources of normal and alternative power	2.7	3.1
K4.08	One-line diagram of 230kV system, including sources of normal and alternative power	2.3*	2.9*
K4.09	One-line diagram of 120V distribution, including sources of normal and alternative power	2.4*	2.9*
K4.10	Uninterruptable ac power sources	3.1	3.5
K5	**Knowledge of the operational implications of the following concepts as they apply to the ac distribution system:** (CFR: 41.5 / 45.7)		
K5.01	Basic transformer theory (tap setting)	1.6	1.9
K5 02	Definition of open circuit	1.6	2.0
K5 03	Principles involved with paralleling between two ac sources	2.4	2.6
K5.04	General principles of operation of a static inverter	1.9	2.5
K6	**Knowledge of the effect of a loss or malfunction of the following will have on the ac distribution system:** (CFR: 41.7 / 45.7)		
K6.01	Motors	1.7	1.8
K6.02	Breakers, relays, and disconnects	1.9	2.2
	ABILITY		
A1	**Ability to predict and/or monitor changes in parameters (to prevent exceeding design limits) associated with operating the ac distribution system controls including:** (CFR: 41.5 / 45.5)		
A1.01	Significance of D/G load limits	3.4	3.8
A1.02	Relationship between load and generator voltage	2.2	2.6

CLASSROOM TIME (Hours)

NLO	NLOR	LPRO	LPSO	LOR
1.0	1.5	1.5	1.5	1.5

OBJECTIVES

	OBJECTIVE	NLO	NLOR	LPRO	LPSO	LOR
1	State the purpose of the Diesel Generator Load Sequencing System.	X	X	X	X	
2	List the Sequencer Automatic Actuation Signals.	X	X	X	X	X
3	List the two Sequencer Modes of Operation and give a brief explanation of each mode.	X	X	X	X	X
4	State which of the Sequencer Modes has priority.		X	X	X	X
5	Describe the sequence of events which occur during the Blackout Mode of Sequencer Operation.		X	X	X	X
6	Describe the sequence of events which occur during the Safety Injection Mode of Sequencer Operation.		X	X	X	X
7	Describe the sequence of events which occur during a Blackout followed by a Safety Injection.		X	X	X	X
8	Describe the sequence of events which occur during a Safety Injection Actuation followed by a Blackout. (NOTE: with S_s reset and with S_s not reset).		X	X	X	X
9	Describe the sequence of events required to be done in order to return the 4.16 KV bus back to normal following a: • Safety Injection • Blackout • Safety Injection followed by a Blackout • Blackout followed by a Safety Injection		X	X	X	X
10	Given a Limit and/or Precaution associated with an operating procedure, discuss its bases and when the it applies.	X	X	X	X	X

3.0 SYSTEM OPERATION

Objective # 10

3.1 Limits and Precautions

PT/2/A/4350/04A, D/G 2A Load Sequencer Test

Manual control of A(B) Train .4160V switchgear is unavailable to Control Room while sequencer is in test mode

Basis: This informs the Control Room Operator that while in the test mode he can not start or stop equipment on the affected bus.

Surveillance testing of DGLSA(B) requires 1A(B) D/G Auto Start.

Basis: The Auto Start Signal will bypass the Manual Mode Circuit thus preventing any Manual Mode Actuation Signal from tripping the Diesel. This also allows those Automatic Mode signals to trip the Diesel if their limits are exceeded.

Circuits inside DGCP1(2)A(B) (Diesel Generator Control Panels 1A, 1B, 2A, 2B) are energized at 120 VAC and 125 VDC.

Basis: This information is used to warn the operator or technician of the dangers inside the control panel and that care must be taken when working near energized circuits.

3.2 Sequencer Operation following Degraded Voltage

The degraded voltage relays are not part of the sequencer circuitry, but they can initiate a Blackout. When the degraded voltage relays open the 4 KV normal and standby circuit breakers, the loss of voltage relays will be actuated.

There is one degraded voltage relay per phase connected in a two-out-of-three logic scheme to detect a degraded voltage condition of less than 3703 Volts. Once the degraded voltage is detected, two time delay relays begin timing to verify the event is sustained. If the first timer, 62TA1 (62TB1), completes its cycle (9.7 seconds), an alarm will be initiated in the control room. The second time delay relay, 62TA2 (62TB2), is provided to allow additional time following the first time delay for the operators to improve voltage. If the degraded voltage condition is still present when the second timing cycle (10 minutes) is complete, a blackout will be initiated on that train by opening the 4 KV normal and standby incoming circuit breakers.

Should a Safety Injection signal occur at any time after the first time delay relay completes its cycle, the circuit will automatically initiate separation from the offsite power source and transfer to the emergency diesel generators.

3.3 Sequencer operation during a Blackout

Objective # 5

Sequencer operation during a Blackout with no safety injection signal and the under-voltage is not due to fault relay 86N, 86S or 86B.

If 2/3 LOV Relays sense a loss of voltage on their associated 4160V bus, the blackout relay will pick up and actuate a D/G start. If the UV condition still exists after 8.5 seconds, the blackout logic is sealed in. All 4160V breakers on the bus are then tripped open. When D/G speed is ≥ 95%, the output breaker will close. When bus voltage is ≥ 92.5% and D/G speed is ≥ 97%, the accelerated sequence is enabled. Blackout loads will be sequentially applied at intervals of approximately 2 seconds, as long as bus voltage remains ≥ 92.5% and frequency remains > 58.2 Hz. Complete loading of all blackout loads, via the accelerated sequence, could be done in as little as 25 seconds. If during the sequencing of blackout loads the Sequencer RESET pushbuttons are depressed, no additional sequencing will occur. This is because once the RESET pushbuttons are depressed, the blackout signal is removed and since there is power on the 4160V bus a blackout no longer exists. It would require another blackout signal or manual loading of the bus to complete the sequencing of loads.

Should the Accelerated Sequence Relay scheme fail to work, the Committed Sequence would be actuated approximately 10 seconds after the diesel receives its blackout start signal if load shed of the bus has been completed. The committed sequence may take up to 12 minutes to load all blackout loads. The committed sequence does not require any minimum voltage or minimum frequency to allow it to progress as does the Accelerated Sequence. The Committed Sequence is required by Technical Specifications.

NOTE 1 **In order for the accelerated sequence to begin or continue, the 127AX Special Relay must indicate >92.5% voltage. If voltage falls below this level, the accelerated sequence will stop until voltage is again above the setpoint.**

In addition, if 4160V bus frequency drops below 97% before or after the accelerated sequence begins, the accelerated sequence will stop until frequency is again above the setpoint.

NOTE 2 **The committed sequence looks at neither voltage nor frequency. When the time delay relay associated with a given load group's sequence timer has timed out, the committed sequence applies that load group regardless of voltage or frequency.**

..062.K4.01	12/1/2002						
Beaver Valley 1	Exam Level	R	Mark Question			Print Recor	New Searc	Exit

Question	Which one of the following conditions will PREVENT the No. 1 EDG output breaker from closing to energize 4KV Bus "1AE" following a loss of power?
Answer:	[ACB-1A10], Emergency Bus "1AE" Feeder Breaker has an overcurrent trip.
Distracter 1	[ACB-1A10], Emergency Bus "1AE" Feeder Breaker has an undervoltage trip.
Distracter 2	[ACB-41C], Normal 4KV Bus "1A" Feeder Breaker has an overcurrent trip with bus "1AE" normal feeder breaker control switch position in 'Auto After Close'.
Distracter 3	[ACB-41C], Normal 4KV Bus "1A" Feeder Breaker has an undervoltage trip with bus "1AE" normal feeder breaker control switch position in 'Auto After Close'.

Distracter Analysis:

Answer:	Correct. Bus overcurrent on 1AE will cause lockout.
Distracter 1:	Incorrect. Undervoltage would be a start signal for the EDG.
Distracter 2:	Incorrect. Lockout on normal 4KV bus will not cause lockout on emergency bus regardless of emergency bus switch position.
Distracter 3:	Incorrect. Undervoltage on normal 4KV bus will cause undervoltage on emergency bus, resulting in EDG start and load, as long as no lockouts exist.

1 Pt. Given the following conditions on Unit 1:

- Annunciator 'D/G A 125VDC CTRL PWR TRBL' comes into alarm
- An operator is dispatched and discovers that the 125 VDC Diesel Control Power breaker for the '1A' Diesel has tripped and will not reset.

Which one of the following describes the effect of the loss of DC Control Power on the '1A' Diesel Generator?

A. The diesel can be manually started from the local panel.

B. The diesel would start in Control Room Override Mode.

C. The diesel can be started automatically or manually.

D. The diesel can not be started automatically or manually.

Bank Question: 1137 **Answer: D**

1 Pt. Given the following conditions on Unit 1:

- Annunciator 'D/G A 125VDC CTRL PWR TRBL' comes into alarm
- An operator is dispatched and discovers that the 125 VDC Diesel Control Power breaker for the '1A' Diesel has tripped and will not reset.

Which one of the following describes the effect of the loss of DC Control Power on the '1A' Diesel Generator? if an SI were to occur

A. The diesel can be manually started from the local panel.

B. The diesel would start in Control Room Override Mode.

C. The diesel can be started automatically ~~or manually.~~

D. The diesel can not be started automatically or manually.

Distracter Analysis: With no control power available the diesel will not start as a result of an automatic or manual start signal.

A. Incorrect:
Plausible:

B. Incorrect:
Plausible:

C. Incorrect:
Plausible:

D. Correct

LEVEL: RO & SRO

KA: SYS 063 K3.02 (3.5/3.7)

SOURCE: NEW

LEVEL OF KNOWLEDGE: Memory

AUTHOR: CWS

LESSON: OP-MC-DG-EPQ

OBJECTIVES: OP-MC-DG-EPQ Obj. 1

REFERENCES: OP-MC-DG EPQ page 11
OP/1/A/6100/010 L A8

063 D.C. Electrical Distribution

TASK:
Start up and shift a vital battery charger
Monitor the dc electrical distribution system
Monitor the dc electrical system for grounds
Energize dc switchboards
De-energize dc switchboards
Energize dc equipment
De-energize dc equipment
Secure a battery charger

K/A NO.	KNOWLEDGE	IMPORTANCE RO	IMPORTANCE SRO
K1	**Knowledge of the physical connections and/or cause-effect relationships between the DC electrical system and the following systems:** (CFR: 41.2 to 41.9 / 45.7 to 45.8)		
K1.01	Ground detection system	2.4	2.9
K1.02	AC electrical system	2.7	3.2
K1.03	Battery charger and battery	2.9	3.5
K1.04	Battery ventilation system	2.2	2.7
K2	**Knowledge of bus power supplies to the following:** (CFR: 41.7)		
K2.01	Major DC loads	2.9*	3.1*
K2.02	Battery room ventilation	2.0	2.2
K3	**Knowledge of the effect that a loss or malfunction of the DC electrical system will have on the following:** (CFR: 41.7 / 45.6)		
K3.01	ED/G	3.7*	4.1
K3.02	Components using DC control power	3.5	3.7
K4	**Knowledge of DC electrical system design feature(s) and/ or interlock(s) which provide for the following:** (CFR: 41.7)		
K4.01	Manual/automatic transfers of control	2.7	3.0*
K4.02	Breaker interlocks, permissives, bypasses and cross-ties.	2.9*	3.2*
K4.03	Effect of jumpering out cells	2.1	2.4
K4.04	Trips	2.6?	2.9?
K5	**Knowledge of the operational implications of the following concepts as the apply to the DC electrical system:** (CFR: 41.5 / 45.7)		
K5.01	Knowledge of basic DC electrical theory	1.9	2.1
K5.02	Hydrogen generation during battery charging	2.2	2.6*

063 D.C. Electrical Distribution

TASK:
Start up and shift a vital battery charger
Monitor the dc electrical distribution system
Monitor the dc electrical system for grounds
Energize dc switchboards
De-energize dc switchboards
Energize dc equipment
De-energize dc equipment
Secure a battery charger

K/A NO.	KNOWLEDGE	IMPORTANCE RO	IMPORTANCE SRO
K1	**Knowledge of the physical connections and/or cause-effect relationships between the DC electrical system and the following systems:** (CFR: 41.2 to 41.9 / 45.7 to 45.8)		
K1.01	Ground detection system	2.4	2.9
K1.02	AC electrical system	2.7	3.2
K1.03	Battery charger and battery	2.9	3.5
K1.04	Battery ventilation system	2.2	2.7
K2	**Knowledge of bus power supplies to the following:** (CFR: 41.7)		
K2.01	Major DC loads	2.9*	3.1*
K2.02	Battery room ventilation	2.0	2.2
K3	**Knowledge of the effect that a loss or malfunction of the DC electrical system will have on the following:** (CFR: 41.7 / 45.6)		
K3.01	ED/G	3.7*	4.1
K3.02	Components using DC control power	3.5	3.7
K4	**Knowledge of DC electrical system design feature(s) and/or interlock(s) which provide for the following:** (CFR: 41.7)		
K4.01	Manual/automatic transfers of control	2.7	3.0*
K4.02	Breaker interlocks, permissives, bypasses and cross-ties.	2.9*	3.2*
K4.03	Effect of jumpering out cells	2.1	2.4
K4.04	Trips	2.6?	2.9?
K5	**Knowledge of the operational implications of the following concepts as the apply to the DC electrical system:** (CFR: 41.5 / 45.7)		
K5.01	Knowledge of basic DC electrical theory	1.9	2.1
K5.02	Hydrogen generation during battery charging	2.2	2.6*

CLASSROOM TIME (Hours)

NLO	NLOR	LPRO	LPSO	LOR
0.5	0.5	0.5	0.5	0.5

OBJECTIVES

	OBJECTIVE	NLO	NLOR	LPRO	LPSO	LOR
1	State the purpose of the Diesel Generator Auxiliary Power System.	X	X	X	X	
2	Explain how AC control power is supplied to the Diesel Generator and its Auxiliaries during: • Manual Mode Operation • Automatic Mode Operation (S_s or Blackout)	X	X	X	X	
3	List typical loads supplied by the 600 VAC, 120 VAC and the 125 VDC Diesel Generator Control Power System.	X	X	X	X	
4	State the time limit each battery is required to be sized to carry all its DC loads without assistance.	X	X	X	X	
5	Describe how each battery is connected to its associated power system.	X	X	X	X	
6	Explain when each battery will automatically assume the DC bus loads.	X	X	X	X	
7	Discuss the normal demands placed upon the battery charger.	X	X	X	X	
8	Given a Limit and/or Precaution associated with an operating procedure, discuss its bases and when it applies.	X	X	X	X	X

1.0 INTRODUCTION

1.1 Purpose

Objective # 1

Provides power to essential 600/120 VAC diesel generator components required for diesel generator operation but not required for a diesel start in a blackout condition.

Provides power to the 125 VDC loads necessary for proper diesel starting and operation during all starts including a blackout and/or a Safety Injection (SI) initiation.

1.2 General Description

NOTE: During 1EOC12, NSM 12482 replaced the Unit 1 D/G Battery Chargers. The Unit 2 D/G Battery Chargers were replaced during 2EOC12, per NSM 22482. A spare D/G Battery Charger was also installed in the Unit 2 DP Battery room (per NSM 22482). It can be used as a maintenance training aid and to provide charging capabilities to a spare bank of batteries that was subsequently installed at a later date.

600 VAC Diesel Generator Auxiliary Power

Power from ETA (ETB), is supplied through a step down transformer (4160/600 VAC) to Load Center ELXA (ELXB). ELXA (ELXB) supplies 600 VAC Motor Control Center EMXE (EMXF).

120 VAC Diesel Generator Control Power

Power from EMXE (EMXF), supplies 600 VAC to a step down transformer (600/120 VAC). The 120 VAC is then used for instrumentation and controls.

The 125 VDC Diesel Generator Control Power System

EMXE (EMXF) supplies 600 VAC to a battery charger which normally provides DC Power. In the event of a loss of the 600 VAC supply to the charger, a battery supplies power to the DC loads.

2.0 COMPONENT DESCRIPTION

2.1 600 VAC Diesel Generator Control Power (Refer to drawing 7.1)

Objective # 2

The 4160 VAC vital bus ETA (ETB) is normally energized from 6900/4160 VAC stepdown transformers. The diesel generators are not usually in operation. The 4160 VAC is reduced to 600 VAC, using stepdown transformers, and supplied to busses ELXA (ELXB). These busses then supply power to EMXE (EMXF) which supplies the 600 VAC essential loads, a 600/120 VAC stepdown transformer for the 120 VAC loads and the 125 VDC battery charger for the DC loads.

6900/4160 VAC ⇒ 1ETA (B) ⇒ 1ELXA (B) ⇒ 1EMXE (F) ⇒ Diesel Auxiliaries.

Nomenclature: **D/G A 125 VDC CTRL PWR TRBL** Window: **A8**

Setpoint: Local alarm

Origin: 1LAMP9 Panel Module 1LAM31

Probable Cause:
- D/G 1A DC Cont Pwr undervoltage
- Battery Chgr 1EDGA bkr open
- Battery Chgr 1EDGA trouble
- Battery Chgr 1EDGA blown Fuses
- Battery 1EDGA bkr open
- Battery 1EDGA ground
- Battery 1EDGA undervoltage
- Battery Chgr low DC voltage
- Battery Chgr AC power failure
- Battery Chgr fan failure
- Battery Chgr high DC voltage
- Battery Chgr high DC voltage trip
- Battery Chgr negative to ground
- Battery Chgr positive to ground
- Battery Chgr loss of ground detect circuit
- Battery Chgr failure

Automatic Action: None

Immediate Action:

1. **IF** alarm is due to 1A D/G Control Power Bkr open (expected):
   A. Declare 1A D/G inoperable.
   B. Perform PT/1/A/4350/025 (Essential Auxiliary Power System Power Source Verification).
   C. No further action required.
2. **IF** cause of alarm is known (expected alarm) **AND** 1A D/G operable, no further action required.
3. Send operator to determine cause of alarm:
   - 1LAMP9
   - 1EDGA Battery Charger Panel

Continue On Next Page

4. Check breakers closed:

   - 1EDGA Battery
   - 1EDGA Battery Charger

Supplementary Action:

1. Notify as required:

   - SRO
   - System Engineer
   - Transmission Control Center (399-9744 or 382-9401)

2. Refer to Tech Specs.

3. **IF** 1A D/G is declared inoperable, perform PT/1/A/4350/025 (Essential Auxiliary Power System Power Source Verification).

References:

- Tech Specs
- MC-1765-00.02
- MC-1759-09.06
- MCEE-106-02.08
- MCS-191.00-EPQ-0001
- MCEE-191 series

End Of Response

Unit 1

..063.K3.02	3/10/2003	Mark Question			Print Recor	New Searc	Exit
Indian Point 2 (Unit)	**Exam Level** R						

Question	Given the following conditions: "21 Emergency Diesel Generator (EDG) is shutdown "DC control power is unavailable to the 21 EDG Which ONE (1) of the following describes how the loss of DC control power would affect the EDG operation?
Answer:	The EDG cannot be started by automatic signals or from the local control panel.
Distracter 1	The EDG would start in response to an automatic signal or from the local control panel.
Distracter 2	The EDG can only be started manually at the local control panel.
Distracter 3	The EDG can only be started manually from the Central Control Room or at the local control panel.

Distracter Analysis:

Answer:	A.Correct. DC required for control circuit for field flash B.Incorrect. Would not start C.Incorrect. Still need power. D.Incorrect. Can't start from either
Distracter 1:	A.Correct. DC required for control circuit for field flash B.Incorrect. Would not start C.Incorrect. Still need power. D.Incorrect. Can't start from either
Distracter 2:	A.Correct. DC required for control circuit for field flash B.Incorrect. Would not start C.Incorrect. Still need power. D.Incorrect. Can't start from either
Distracter 3:	A.Correct. DC required for control circuit for field flash B.Incorrect. Would not start C.Incorrect. Still need power. D.Incorrect. Can't start from either

1 Pt. Which one of the following will prevent an Emergency Diesel Generator automatic start during a Blackout?

A. Diesel Generator Lube Oil temperature 193°F

B. KD (Jacket Water) Surge Tank .9 feet

C. Fire Lockout not RESET

D. 2/2 Turning Gear limit switches failed in engaged position

---

Bank Question: 1138 **Answer: D**

1 Pt. Which one of the following will prevent an Emergency Diesel Generator automatic start during a Blackout?

A. Diesel Generator Lube Oil temperature 193°F

B. KD (Jacket Water) Surge Tank .9 feet

C. Fire Lockout not RESET

D. 2/2 Turning Gear limit switches failed in engaged position

---

Distracter Analysis:.

A. **Incorrect**: this a Manual Mode permissive
Plausible:

B. **Incorrect**: this is a Manual Mode permissive
Plausible:

C. **Incorrect**: this is a Manual Mode permissive
Plausible:

D. **Correct**

LEVEL: RO & SRO

KA: 064 K3.02 (4.2/4.4)

SOURCE: NEW

LEVEL OF KNOWLEDGE: Memory

AUTHOR: CWS

LESSON: OP-MC-DG-DG

OBJECTIVES: OP-MC-DG-DG Obj. 9

REFERENCES: OP-MC-DG-DG pages 41 and 43

064 Emergency Diesel Generators (ED/G)

TASK:
Perform a lineup of the ED/G system
Start an ED/G
Load the ED/G
Perform ED/G load tests
Monitor the ED/G
Perform ED/G inoperative test (loss of reserve power)
Unload the ED/G
Shut down the ED/G
Operate the diesel-starting air compressor
Restart an ED/G with an automatic start signal present
What if emergency loads are not shed when time sequence starts during emergency diesel inoperative test?
What if ED/G breaker closed at other than 12:00 position on synchroscope?
What if ED/G load is not reduced?

K/A NO.	KNOWLEDGE	IMPORTANCE RO	IMPORTANCE SRO
K1	**Knowledge of the physical connections and/or cause-effect relationships between the ED/G system and the following systems:** (CFR: 41.2 to 41.9 / 45.7 to 45.8)		
K1.01	AC distribution system	4.1	4.4
K1.02	D/G cooling water system	3.1	3.6*
K1.03	Diesel fuel oil supply system	3.6	4.0
K1.04	DC distribution system	3.6	3.9
K1.05	Starting air system	3.4	3.9
K2	**Knowledge of bus power supplies to the following:** (CFR: 41.7)		
K2.01	Air compressor	2.7*	3.1
K2.02	Fuel oil pumps	2.8*	3.1
K2.03	Control power	3.2*	3.6
K3	[redacted]		
K3.01	Systems controlled by automatic loader	3.8*	4.1
[redacted]			
K3.03	ED/G (manual loads)	3.6	3.9*

CLASSROOM TIME (Hours)

NLO	NLOR	LPRO	LPSO	LOR
1.0	1.0	1.0	1.0	1.0

OBJECTIVES

	OBJECTIVE	NLO	NLOR	LPRO	LPSO	LOR
1	State the purpose of the Diesel Generators.	X	X	X	X	
2	Describe the three major accident situations the Diesel Generators are provided to respond to.	X	X	X	X	
3	Describe the Design Criteria Functional Requirements of each Diesel Generator.	X	X	X	X	
4	Explain the various modes of Diesel Generator Operation.	X	X	X	X	
5	List the thirteen (13) Manual Mode Trips of the Diesel Generators.	X	X	X	X	X
6	List the four (4) Automatic Mode Trips of the Diesel Generators.	X	X	X	X	X
7	List the one (1) Diesel Generator Automatic Start signal.	X	X	X	X	X
8	Given a Limit and/or Precaution associated with an operating procedure, discuss its bases and when it applies.	X	X	X	X	X
9	[redacted]	X	X	X	X	X
10	Explain each of the following infrequently used Diesel Generator Controls: • Emergency Stop Pushbutton • Emergency Stop Reset Pushbutton • 86 D Lockout Relay (Explain consequences of not resetting relay) • Control Room Override Breakglass	X	X	X	X	X

With the diesel in the Control Room Mode of Operation, the diesel can be started using the remote start push-button. The Local Start Pushbutton is defeated while the diesel is selected in this mode. The Local Stop Pushbutton is **NOT** defeated while in the Control Room Mode because an operator surveillancing the diesel room may run upon a situation which warrants the diesel trip and/or shutdown and personnel in the Control Room may not be aware of the situation. By allowing a local stop while in the Control Room Mode of Operation, the diesel can be stopped quickly to minimize damage to components.

The only other alternative would be for the operator in the diesel room to depress the Emergency Stop Pushbutton. The disadvantage of this is that depressing the Emergency Stop Pushbutton will stop most of the auxiliary pumps which remain running following a diesel shutdown to help cool the engine in a controlled manner. Inadequate cooldown can lead to diesel damage and extended diesel outages.

Permissives required for a Manual Mode Start of the Diesel

Diesel Lube Oil Temperature must be < 190°F. This ensures proper oil viscosity for the diesel rotating components and also provides for a portion of the overall engine cooling.

Engine Jacket Water Temperature must be < 200°F. This ensures proper cooling for the diesel rotating components and engine jackets. Cooling water also supplies other components such as the Turbocharger Turbine and Compressor sides, the Intercooler, the Lube Oil Cooler, and the Mechanical Governor Oil Cooler.

Jacket Water Level in the KD Surge Tank must be > 1 ft. This ensures there is a sufficient volume of water available for cooling the diesel and its components. A makeup supply is available from both a normal and assured source of water.

The turning gear must be disengaged. When the turning gear is engaged, two limit switches are made. With either of these limit switches made, there can be no Local or Remote Start. Both limit switches engaged, blocks an emergency start.

The Emergency Stop Reset Pushbutton must be Reset. In the Manual Mode, this push-button must be depressed if there has been a Fire Shutdown of the diesel. In the Automatic Mode, this push-button must be depressed if there has been a low lube oil pressure condition, overspeed condition, or if the Emergency Stop push-button has been depressed. In order to regain control of the diesel, the Emergency Stop Reset Pushbutton must be depressed.

The 86D Lockout Relay must be Reset. This Lockout Relay will Automatically actuate and trip the diesel if either an 87G (Generator Differential) or 51V (Generator Voltage Controlled Overcurrent) relay has actuated. This relay will also trip and lockout the diesel breaker. To regain control of the diesel after either of these relays actuate, the 86D Lockout Relay must be reset.

With all of the permissives satisfied the diesel can be started either from the Control Room or local panel.

Starting the diesel

Once the diesel is started, the following conditions must be satisfied within twenty (20) seconds or the diesel will trip.

1. Crankcase vacuum must be greater than 0.5" H_2O,
2. Jacket Water Pressure must be greater than 15 psig.

When the diesel reaches 40% speed, the starting air solenoids are de-energized closed isolating air the engine. If speed is not greater than 40% within 20 seconds, starting air to the diesel is isolated.

The diesel is considered to be running when speed is ≥ 95%. If lube oil pressure is less than 33 psig on 2/2 pressure sensors, after an additional 30 second time delay on an initial diesel start, the diesel will trip. The low lube oil pressure trip is bypassed until diesel speed exceeds 95% with an additional 30-second time delay. The delay gives the Engine Driven Lube Oil Pump time to build pressure in the header. The lube oil pressure has to make the reset (33 psig) on at least one pressure switch. After the diesel is running, if lube oil pressure drops to <28 psig a low lube oil pressure trip occurs.

If engine speed exceeds 112% on 2/3 speed pick-ups, the diesel will trip. This trip is bypassed until diesel speed exceeds 95%. Once the diesel trips, a signal is sent to de-energize the solenoids supplying air to the Run/Shutdown Cylinders, allowing the fuel racks to be held closed. A signal is also sent to the Electronic Governor to place it in the Minimum Fuel position.

Objective # 5

All permissives required to be satisfied prior to a diesel start remain in effect as the diesel runs. The following is a list of the signals which will trip the diesel after a start in the Manual Mode of Operation:

1. Remote Stop Pushbutton depressed when selected to the Control Room Mode of Operation.
2. Local Stop Pushbutton depressed whether selected to Control Room, Local, or Control Room Emergency Mode of Operation.
3. Lube Oil Temperature High (>190 °F).
4. Jacket Water Temperature High (>200 °F).
5. Jacket Water Level Low (<1 Ft).
6. Engine Overspeed (>112% on 2/3 speed switches).
7. Turning Gear Engaged (1/2 Limit switches made).
8. Emergency Stop (Emergency Stop Pushbutton Depressed).
9. Low Lube Oil Pressure (<28 psig on 2/2 switches). This trip is reset only if oil pressure exceeds 33 psig on an initial diesel start.
10. 86D Lockout Relay Tripped (87G Differential or 51V Voltage Controlled Overcurrent relay actuated).
11. Fire Shutdown (Halon Actuation or Fire Relay Actuated).

1 Pt. A Manual Control Room start of the '1A' Diesel Generator is being performed per OP/1/A/6350/002 (1A D/G Startup). The synchroscope is moving rapidly in (SLOW) counter clockwise direction.

DG voltage is 4200V and line voltage is 4150

Which one of the following must be done before to close the 1ETA Emergency Breaker? IAW the Procedure.

A. Raise the Diesel Generator governor control

B. Lower the Diesel Generator governor control

C. Raise the Diesel Generator voltage adjust

D. Lower the Diesel Generator voltage adjust

ANY one CAN be done prior to closure because there are no interlocks

Bank Question: 1139 **Answer: A**

1 Pt.

A Manual Control Room start of the '1A' Diesel Generator is being performed per OP/1/A/6350/002 (1A D/G Startup). The synchroscope is moving rapidly in (SLOW) counter clockwise direction.

Which one of the following must be done to close the 1ETA Emergency Breaker?

A. Raise the Diesel Generator governor control

B. Lower the Diesel Generator governor control

C. Raise the Diesel Generator voltage adjust

D. Lower the Diesel Generator voltage adjust

Distracter Analysis:.

A. **Incorrect**:
Plausible:

B. **Incorrect**:
Plausible:

C. **Incorrect**:
Plausible:

D. **Incorrect**
Plausible:

LEVEL: RO & SRO

KA: 064 A4.03 (3.2/3.3)

SOURCE: NEW

LEVEL OF KNOWLEDGE: Comprehension

AUTHOR: CWS

LESSON: OP-MC-SF-C18

OBJECTIVES: - OP-MC-SF-C18, Terminal Objective

REFERENCES: OP-MC-SF-C18, page 5

SYSTEM:	064 Emergency Diesel Generator (ED/G) System		
A3.06	Start and stop	3.3	3.4
A3.07	Load sequencing	3.6*	3.7*
A3.08	Consequences of automatic transfer to automatic position after the ED/G is stopped	3.7?	4.0
A3.09	Functions (modes) of automatic transfer switch (to a startup bank)	4.0*	4.0
A3.10	Function of ED/G megawatt load controller	2.8	2.8*
A3.11	Need for setting offsite power breaker to automatic	3.1*	2.9*
A3.12	Purpose of automatic load sequencer	3.3*	3.5
A3.13	Rpm controller/megawatt load control (breaker-open/ breaker-closed effects)	3.0*	2.9
A4	**Ability to manually operate and/or monitor in the control room:** (CFR: 41.7 / 45.5 to 45.8)		
A4 01	Local and remote operation of the ED/G	4.0	4.3
A4 02	Adjustment of exciter voltage (using voltage control switch)	3.3	3.4
A4.03	Synchroscope	3.2	3.3
A4.04	Remote operation of the air compressor switch (different modes)	3.2*	3.2
A4.05	Transfer of ED/G control between manual and automatic	3.1	3.2
A4.06	Manual start, loading, and stopping of the ED/G	3.9	3.9
A4.07	Transfer ED/G (with load) to grid	3.4	3.4
A4.08	Opening of the ring bus	3.2*	3.2*
A4.09	Establishing power from the ring bus (to relieve ED/G)	3.2*	3.3*
A4.10	Need for, and consequences of, manually shedding (loads) safeguards bus	3.3	3.4
A4.11	The setting of droop voltage to zero	2.2	2.4
A4.12	Synchroscope	2.7*	2.6

DIESEL GENERATOR

EXERCISE TERMINAL OBJECTIVE(S)

This exercise will familiarize the trainee with the operation of the Diesel Generator from the Control Room during normal and minor abnormal operation. The trainees will demonstrate evaluation and diagnostic skills.

LENGTH OF EXERCISE

2.0 HOURS

REFERENCES

1. Operating Experience
   - PIP 0-M97-2572
   - PIP 0-M99-4055
2. MNS Procedures
   - OP/1/A/6350/002, Diesel Generator
   - PT/1/A/4350/025, Essential Auxiliary Power System Power Source Verification

COMMITMENTS

None

EXERCISE DESCRIPTION

The exercise guide begins with familiarization of Control Room controls, indications, annunciators and status lights associated with the Diesel Generators.

Using OP/1/A/6350/002, Diesel Generator, the trainees will:

- Startup and parallel the D/G to the 4160V bus
- Load the D/G and separate the 4160V bus from the Duke grid
- Parallel the 4160V bus back to the Duke grid and unload the D/G
- Separate the D/G from the 4160V bus and then shut it down

The trainees will walkthru PT/1/A/4350/025, Essential Auxiliary Power System Power Source Verification, as a group.
The trainees will observe the indications of an automatic start of the D/G due to a loss of power to the 4160v bus. The trainees will then identify improper indications of a D/G automatic start.

c. Enclosure 4.5, D/G 1A Startup Checklist, has already been performed.

d. Section labeled, "Start Diesel by means other than slow start" is to be performed.

e. Engineering request that D/G voltage be adjusted to 4160V and frequency to 60Hz.

f. When the trainees reach the step that requires adjusting D/G voltage, cover the OE provided in Enclosure 5.3.

g. During Synchronizing the D/G to the bus, ask the following questions

➢ **Question**: What does the D/G synchroscope moving slow in the fast direction indicate?

Answer: Moving slowly indicates that the D/G frequency and the bus frequency are close to the same. If the meter stopped, the frequencies would be the same. Moving in the fast direction indicates the D/G frequency is higher that the bus frequency.

➢ **Question**: Why do we want the D/G synchroscope moving slow in the fast direction?

Answer: If the D/G frequency were lower than the bus frequency when the D/G breaker is close, the D/G could become a load (reverse power) instead of a power source. Motorizing the D/G can cause excessive current through its generator windings and likely damage them.

➢ **Question**: Why do we want the D/G synchroscope within 3 minutes of 12 o'clock position when we close the D/G breaker?

Answer: The position of the synchroscope pointer reflects the relative phase angle between the D/G and the bus voltages. The 3 minutes till 12 o'clock position allows the D/G and the bus will be exactly in phase as the breaker closes. The closer the two phases are, the smaller the "jolt" to the D/G when the sources try to instantaneously align in-phase. If the synchroscope were at the 6 o'clock position (the sources would be 180° out of phase) when the breaker closed, there would be severe torque to the diesel motor, diesel shaft and diesel generator rotor windings. Also there would be severe arching across the D/G breaker.

h. "Simulate" waiting 5 minutes at 1000KW.

i. Inform the trainees that it is desired to continue in the procedure and separate the 4160v bus from the Duke grid (D/G is the only power source tied to the bus).

B. *Remove D/G from Vital Bus and Shutdown*

INSTRUCTOR

Note: The pair of trainees just completing Section A will continue with Section B however, they should swap roles (with exception of the pair containing an SRO upgrade).

_____ 3.18 **IF** 1LD-108A (Lube Oil Filter Bypass Valve) indicates "OPEN", notify WCC SRO immediately.

_____ 3.19 **WHEN** D/G running **AND** Fuel Oil Booster Pump "OFF", check 1FDPG5000 (Fuel Oil Pressure) greater than 32 psig.

3.20 Check the following on OAC (Turn-on Code RNESS1A):

☐ 1RN-70A (1A KD HX Supply Isol) indicates "OPEN"
☐ RN flow indicated through D/G Heat Exchanger

3.21 Check the following:

☐ Steady-state D/G Volts 3740 - 4580 V
☐ Steady-state D/G Frequency 58.8 - 61.2 Hz

_____ 3.22 **IF** requested by Engineering or Maintenance for specific D/G voltage and frequency, perform the following:

_____ • Adjust D/G voltage using "1A D/G Voltage Adjust"
_____ • Adjust D/G frequency using "1A D/G Gov Control"

_____ 3.23 **IF** D/G is to remain unloaded, exit this enclosure.

_____ 3.24 Ensure frequency 60 Hz using "1A D/G Gov Control".

☐ 3.25 Check "Line Volts" 3960 - 4360 V.

_____ 3.26 Adjust D/G voltage 50 – 100V higher than line voltage using "1A D/G Voltage Adjust".

CAUTION: Failure of the Droop Permissive could result in erratic D/G operation while paralleled to the bus.

_____ 3.27 **IF** OAC is available, check OAC Point M1D3354 (1A D/G Droop Permissive) indicates "COMPLETE".

_____ 3.28 Place "1A D/G Sync Switch" to "ON".

NOTE: Synchroscope should travel no faster than one revolution in 20 seconds.

_____ 3.29 Using "1A D/G Gov Control", adjust D/G speed to allow synchroscope to move slowly in "FAST" (clockwise) direction.

NOTE:
- D/G load should be raised quickly after closing breaker to prevent reverse power condition.
- Steps 3.30 - 3.31 may be completed and then signed off as time allows.

____ 3.30 **WHEN** synchroscope pointer is within three minutes before 12 o'clock position, firmly depress and promptly release "CLOSE" for "1ETA Emergency Breaker".

3.31 Perform the following concurrently:

____ • Quickly raise D/G load to 1000 KW using "1A D/G Gov Control"
____ • Maintain power factor 0.90 - 0.92 lagging using "1A D/G Voltage Adjust"

____ 3.32 Place "1A D/G Sync Switch" to "OFF".

____ 3.33 Check the following:

☐ Oil splashing on turbocharger intake side bearing sightglass
☐ Oil splashing on turbocharger exhaust side bearing sightglass

____ 3.34 **IF** 1LD-108A (Lube Oil Filter Bypass Valve) indicates "OPEN" **OR** 1LDPG5360 (1A D/G Lube Oil Filter D/P) greater than 12 psid, notify WCC SRO immediately.

☐ 3.35 Operate D/G at 1000 KW for 5 minutes.

1 Pt.

The Auxiliary building Ventilation System (VA) system is in normal alignment.

Which one of the following describes the VA system alignment as a result of a 1EMF35L (Unit Vent Particulate Low Range) Trip 2?

A. Four Filtered Exhaust Fans running in the filter mode

B. Four Filtered Exhaust Fans running in the filter bypass mode

C. Four supply fans and four filtered exhaust fans running in the filter mode

D. Four supply fans and four filtered exhaust fans running in the filter bypass mode

---

Bank Question: 1140 **Answer: B**

1 Pt. The Auxiliary building Ventilation System (VA) system is in normal alignment.

Which one of the following describes the VA system alignment as a result of a 1EMF35L (Unit Vent Particulate Low Range) Trip 2?

A. Four Filtered Exhaust Fans running in the filter mode

B. Four Filtered Exhaust Fans running in the filter bypass mode

C. Four supply fans and four filtered exhaust fans running in the filter mode

D. Four supply fans and four filtered exhaust fans running in the filter bypass mode

---

Distracter Analysis:. 1EMF35L in Trip two will trip off all unfiltered exhaust fans which will trip the supply fans. EMF 42 in trip 2 places the filter in service

A. Incorrect:
Plausible:
B. Correct:
C. Incorrect:
Plausible:
D. Incorrect
Plausible:

No correct ANSWER

LEVEL: RO & SRO

KA: 073 K1.01 (3.6/3.9)

SOURCE: NEW

LEVEL OF KNOWLEDGE: Memory

AUTHOR: CWS

LESSON: OP-MC-PSS-VA

OBJECTIVES: OP-MC-PSS-VA Obj. 12

REFERENCES: OP-MC-PSS-VA page 27

073 Process Radiation Monitoring (PRM) System

TASK: Perform lineups of air PRM system
Perform PRM instrumentation functional check
Operate the PRMs
Perform PRM equipment check
Monitor the PRM system

K/A NO.	KNOWLEDGE	IMPORTANCE RO	IMPORTANCE SRO
K1	**Knowledge of the physical connections and/or cause-effect relationships between the PRM system and the following systems:** (CFR: 41.2 to 41.9 / 45.7 to 45.8)		
K1.01	Those systems served by PRMs	3.6	3.9
K2	**Knowledge of bus power supplies to the following:** (CFR: 41.7)		
K2.01	Radiation monitoring systems	2.3*	2.7*
K3	**Knowledge of the effect that a loss or malfunction of the PRM system will have on the following:** (CFR: 41.7 / 45.6)		
K3.01	Radioactive effluent releases	3.6	4.2
K4	**Knowledge of PRM system design feature(s) and/or interlock(s) which provide for the following:** (CFR: 41.7)		
K4.01	Release termination when radiation exceeds setpoint	4.0	4.3
K4.02	Letdown isolation on high-RCS activity	3.3*	3.9*
K5	**Knowledge of the operational implications as they apply to concepts as they apply to the PRM system:** (CFR: 41.5 / 45.7)		
K5.01	Radiation theory, including sources, types, units, and effects	2.5	3.0
K5.02	Radiation intensity changes with source distance	2.5	3.1
K5.03	Relationship between radiation intensity and exposure limits	2.9*	3.4

OBJECTIVES

	OBJECTIVE	NLO	NLOR	LPRO	LPSO	LOR
10	Describe the operation of the VA System following a Blackout and/or Safety Injection signal.		X	X	X	X
11	Discuss when the VA Systems Filtered Exhaust Fan's "RESET" pushbutton will be used.	X	X	X	X	X
12	Discuss the response of the VA System to a Trip II alarm on the following EMFs. • EMF-35(L) Unit Vent Particulate (Low Range) • EMF-37 Unit Vent Iodine • EMF-41 Auxiliary Building Ventilation	X	X	X	X	X
13	Concerning the Technical Specifications related to the VA System: • Given the LCO title, state the LCO (including any COLR values) and applicability. • For any LCO's that have action required within one hour, state the action. • Given a set of parameter values or system conditions, determine if any Tech Spec LCO's is(are) not met and any action(s) required within one hour. • Given a set of parameter values or system conditions and the appropriate Tech Spec, determine required action(s). • Discuss the bases for a given Tech. Spec. LCO or Safety Limit. *** SRO ONLY**			X X X X	X X X X X	X X X X *

- All other VA system non-essential components continue to operate if power is available.

EP/1(2)/5000/G-1, Encl. 13 (VC and VA Operation) will direct the operator to align VA for the filtered mode of operation and ensure Filtered Exhaust Fans are running and the Unfiltered Exhaust Fans and Supply Fans are off. It also checks the ECCS pump fans on.

Objective # 11

To regain control of the VA System following an S_S sequencer actuation:

- Reset S_S then "Reset" the sequencer
- Depress the "Resets" for the VA system Filtered Exhaust units located on local panels (1(2)ABFX-ECP-1A/1B) in the Auxiliary Building
- Only the Filtered Exhaust units with the "NOT RESET" light energized will have to be "reset". (assuming bulb is not burned out)

Note: The Reset circuitry on the Filtered Exhaust units prevent the Unfiltered Exhaust fans from running/starting unless the circuit has been "Reset". If any Filtered Exhaust Unit has not been reset (either unit or either train) none of the Unfiltered Exhaust units can be started.

3.2.2 Auxiliary Building Ventilation System Response to **Blackout Signal**

The Auxiliary Building Ventilation System response to a **Blackout Signal** is similar to the response to a Safety Injection signal except for the ES pump room AHUs (ND, NS, KF) which **do not** receive an auto start signal.

Provisions are made to supply cooling to the Auxiliary Building in a condition where offsite power is not available. This auxiliary electrical distribution system is supplied from the SSF diesel. The MCC's fed from this system have breakers supplied with Kirk Key interlocks so that all normal incoming power feeder breakers are open before the breakers feeding from this auxiliary system (MCC-BMXA) can be closed. Control is available in the SSF to trip this system from the SSF should it be necessary to do so.

The relays used to interlock the supply and filtered exhaust fans are normally supplied from a power panelboard that is not diesel backed. In order to make the supply fans operable in the auto mode during a Blackout, a switch located on panel 1AB-ECP-1 labeled KXA-SKH must be selected to the SKH position. This will transfer the relays to a power panelboard 1L27 that is supplied by SKH.

3.2.3 Auxiliary Building Ventilation System **response to EMF Signals**

Objective # 12

- EMF-41 "Auxiliary Building Ventilation" Trip II will place the filtered exhaust filters in service by closing the bypass damper and opening the filter inlet and outlet dampers on both units filter trains
- EMF-35(L) "Unit Vent Particulate (Low Range)" or EMF-37 "Unit Vent Iodine" Trip II on either unit will shutdown all the Unfiltered Exhaust Fans (which will secure the AB Supply AHUs).

1 Pt. Given the following conditions on Unit 1:

- 'A" train components are in service
- The 'A" Nuclear Service Water (RN) Pump Trips
- The ONLY operator action taken is starting the 'B" RN Pump

Which one of the following is an adverse consequence of the configuration?

A. Increasing Reactor Coolant Pump stator temperatures

B. Loss of flow to the running NV and KF Pump motor coolers

C. Increasing lower containment temperature

D. High Reactor Coolant Pump motor bearing temperatures

Bank Question: 1141 **Answer: D**

1 Pt. Given the following conditions on Unit 1:

- 'A" train components are in service
- The 'A" Nuclear Service Water (RN) Pump Trips
- The ONLY operator action taken is starting the 'B" RN Pump

Which one of the following is an adverse consequence of the configuration?

A. Increasing Reactor Coolant Pump stator temperatures

B. Loss of flow to the running NV and KF Pump motor coolers

C. ~~**Increasing lower containment temperature**~~ Excessive temp in KC System

D. High Reactor Coolant Pump motor bearing temperatures

Distracter Analysis:. 'B' RN pump will supply the essential components of the 'A' train with the exception of the 'A' train KC HX which automatically isolates when the pump trip.

A. **Incorrect**: the NCP stators are cooled by RN and on non essential header that will be cooled by the "B' train when started
Plausible:

B. **Incorrect**:
Plausible: parallel to KC HX and will have flow when 'B" train RN started

C. **Incorrect**:
Plausible: same as 'C' above

D. **Correct**

LEVEL: RO & SRO

KA: 076 K3.02 (2.5*/2.8*)

SOURCE: NEW

LEVEL OF KNOWLEDGE: Comprehension

AUTHOR: CWS

LESSON:

OBJECTIVES:

REFERENCES: AP/1/A/5500/20 page 5

SYSTEM: **076 Service Water System (SWS)**

K1.23	Spent fuel pool makeup	2.1*	2.2
K1.24	Chemical addition	1.8	1.9
K1.25	Heat sink pond makeup	2.4*	2.3*
K1.26	Flood alarm system	2.2*	2.2*
K2	**Knowledge of bus power supplies to the following:** (CFR: 41.7)		
K2.01	Service water	2.7*	2.7
K2.02	Closed cooling water	2.2*	2.2*
K2.03	Secondary closed cooling water	2.1*	2.0*
K2.04	Reactor building closed cooling water	2.5*	2.6*
K2.05	Turbine building closed cooling water	2.0*	2.0*
K2.06	RHR components, controls, sensors, indications and alarms, including radiation monitors	2.2*	2.4*
K2.07	Cooling tower fans	2.2*	2.1*
K2.08	ESF-actuated MOVs	3.1*	3.3*
K2.09	Traveling screens	1.8	2.2*
K3	**Knowledge of the effect that a loss or malfunction of the SWS will have on the following:** (CFR: 41.7 / 45.6)		
K3.01	Closed cooling water	3.4*	3.6
K3.02	Secondary closed cooling water	2.5*	2.8*
K3.03	Reactor building closed cooling water	3.5*	3.9*
K3.04	Turbine building closed cooling water	2.2*	2.4*
K3.05	RHR components, controls, sensors, indicators, and alarms, including rad monitors	3.0*	3.2*
K3.06	Turbine lube oil system	1.7	1.8
K3.07	ESF loads	3.7	3.9
K3.08	Radioactive liquid waste discharges	2.3	2.9*
K3.09	Normal process heat loads	1.9	2.1
K4	**Knowledge of SWS design feature(s) and/or interlock(s) which provide for the following:** (CFR: 41/7)		
K4.01	Conditions initiating automatic closure of closed cooling water auxiliary building header supply and return valves	2.5*	2.9*
K4.02	Automatic start features associated with SWS pump controls	2.9	3.2
K4.03	Automatic opening features associated with SWS isolation valves to CCW heat exchanges	2.9*	3.4*
K4.04	River intake water level recorders	2.2*	2.5*
K4.05	Service water train flow and discharge pressure when service water flow to heat exchanger for closed cooling water is throttled	2.3*	2.6*
K4.06	Service water train separation	2.8	3.2

ACTION/EXPECTED RESPONSE	RESPONSE NOT OBTAINED

4. [redacted]

__ a. Check 1A KC pump(s) - RUNNING.

__ a. GO TO Step 4.h.

b. Ensure 1A KC pumps aligned to reactor bldg non essential header as follows:

1) Open:

__ • 1KC-230A (Trn A Rx Bldg Non Ess Sup Isol)

__ • 1KC-3A (Trn A Rx Bldg Non Ess Ret Isol).

2) Close:

__ • 1KC-228B (Trn B Rx Bldg Non Ess Sup Isol)

__ • 1KC-18B (Trn B Rx Bldg Non Ess Ret Isol).

__ c. Check 1A RN pump - RUNNING PROPERLY.

__ c. GO TO Step 4.e.

__ d. GO TO Step 5.

__ e. Check 1RN-86A (A KC Hx Inlet Isol) - LOCALLY THROTTLED.

e. Perform the following:

__ [redacted]

__ 2) [redacted]

__ f. Ensure 1A RN Pump is off.

f. Dispatch operator to perform the following on 1A RN Pump 4160V breaker:

__ 1) Pull control power fuses.
__ 2) Trip breaker.

__ g. GO TO Step 5.

1 Pt. Unit 1 has experienced a loss of VI (Instrument Air) to the Auxiliary Building. ~~No Safety Injection signal exists.~~ The unit is at 60% power.

Which one of the following is correct concerning the alignment of VG (Diesel Generator Starting Air) to VI?

A. VG auto aligns; ~~D/G running~~ or Loss of IA when DG manually started

B. VG auto aligns; ~~D/G shutdown~~ MUST BE when DG manually started

C. VG manually aligned; D/G running MUST BE ONLY

D. VG manually aligned; ~~D/G shutdown~~

How ~~would~~ could the VG system be aligned to the VI system.

Bank Question: **Answer: C**

1 Pt. Unit 1 has experienced a loss of VI (Instrument Air) to the Auxiliary Building. No Safety Injection signal exists.

Which one of the following is correct concerning the alignment of VG (Diesel Generator Starting Air) to VI?

A. VG auto aligns; D/G running

B. VG auto aligns: D/G shutdown

C. VG manually aligned; D/G running

D. VG manually aligned; D/G shutdown

Distracter Analysis: VG to VI solenoid valves do auto open but locked closed manual valves prevent auto alignment. Auto valves require > 95 % D/G speed and no SI signal present..

A. Incorrect:
Plausible:

B. Incorrect:
Plausible:

C. Correct:

D. Incorrect
Plausible:

LEVEL: RO & SRO

KA: 078 K4.02 (3.2*/3.5*)

SOURCE: NEW

LEVEL OF KNOWLEDGE: Comprehension

AUTHOR: CWS

LESSON: DG-DGA

OBJECTIVES: OP-MC-obj. 7

REFERENCES: OP-MC DG-DGA page 27 and 29.

078 Instrument Air System (IAS)

TASK:
Perform lineups of the IAS
Start up the IAS
Monitor IAS
Shift instrument air compressors
Operate system air dryers
Perform testing of automatic operation of IAS

K/A NO.	KNOWLEDGE	IMPORTANCE RO	IMPORTANCE SRO
K1	**Knowledge of the physical connections and/or cause-effect relationships between the IAS and the following systems:** (CFR: 41.2 to 41.9 / 45.7 to 45.8)		
K1.01	Sensor air	2.8*	2.7*
K1.02	Service air	2.7*	2.8
K1.03	Containment air	3.3*	3.4*
K1.04	Cooling water to compressor	2.6	2.9
K1.05	MSIV air	3.4*	3.5*
K2	**Knowledge of bus power supplies to the following:** (CFR: 41.7)		
K2.01	Instrument air compressor	2.7	2.9
K2.02	Emergency air compressor	3.3*	3.5*
K3	**Knowledge of the effect that a loss or malfunction of the IAS will have on the following:** (CFR: 41.7 / 45.6)		
K3.01	Containment air system	3.1*	3.4*
K3.02	Systems having pneumatic valves and controls	3.4	3.6
K3.03	Cross-tied units	3.0	3.4
K4	**Knowledge of IAS design feature(s) and/or interlock(s) which provide for the following:** (CFR: 41.7)		
K4.01	Manual/automatic transfers of control	2.7	2.9
[redacted]			
K4.03	Securing of SAS upon loss of cooling water	3.1*	3.3*
K5	**Knowledge of the operational implications of following concepts as they apply to the IAS:** (CFR: 41.5 / 45.7)		
K5.01	Gas laws	1.5	1.7
K5.02	Diesel effect	1.7	1.8

CLASSROOM TIME (Hours)

NLO	NLOR	LPRO	LPSO	LOR
5.0	2.0	2.0	2.0	2.0

OBJECTIVES

	OBJECTIVE	NLO	NLOR	LPRO	LPSO	LOR
1	State the purpose of the Diesel Generator Auxiliaries.	X	X	X	X	
2	State the purpose of the Turning Gear.	X	X	X	X	
3	Discuss the following associated with the Turning Gear: • Diesel auto and manual mode start permissives. • Turning gear effects on diesel operability.	X	X X	X X	X X	X X
4	State the purpose of the Starting Air System.	X	X	X	X	
5	Explain how an automatic start and stop of the Starting Air Compressors is accomplished.	X	X	X	X	X
6	State the purpose of the Starting Air Dryers.	X	X	X	X	
7	Explain how the Starting Air System can automatically supply air to the Auxiliary Building Instrument Air System.	X	X	X	X	X
8	Describe how an air start of the diesel is accomplished.	X	X	X	X	X
9	List the Starting Air Header Loads that are supplied once the Starting Air Valves are open.	X	X	X	X	
10	Discuss the adverse effects each of the following contaminants can have on Starting Air System components: • Water • Particulates • Hydrocarbons		X	X	X	X

Objective # 10

There are two filters installed in series on the outlet of each aftercooler and inlet to each air dryer. The first filter is designed to remove moisture and particulate from the air. It is installed with a triple trap which blows down to a floor drain in the diesel generator room. The second filter is designed to remove oil carried over from the VG compressor and is also installed with a triple trap which blows down to a catch container located in the diesel generator room trench beside the diesel under the turbocharger. The purpose of these filters is to prolong dryer life.

The NLO performing rounds in the diesel generator room will check the level of the oil in the catch container as part of the normal diesel generator room rounds. Oil contained in the catch container will be emptied into the Waste Oil Storage Tank (WOST).

Objective # 6 & 10

Each starting air sub-system has an air dryer. These dryers reduce the overall moisture content of the air stored in the Starting Air Tanks. Pressure dew points of -10 to +5 °F have been obtained. Excess moisture in starting air can lead to long term problems such as cylinder liner wear or solenoid valve sticking. The air dryers are of the membrane type. The membrane is sensitive to oil and water induction. This is why oil, moisture, and particulate filters are installed on the dryer inlet. As air moves through the dryer, a percentage of the air is vented to atmosphere through sweep air ports. Water droplets entrained in the air stream are too large to pass through the membrane and are removed by the sweep air.

After the Starting Air Compressor stops during a normal cycle, air will continue to blow down from the air dryer for several minutes until the header depressurizes. Starting air tank pressure is prevented from decreasing by VG system check valves. Check valve leakage will result in excessive compressor operation. If an Operator notices excessive compressor operation along with hot VG System piping, this could be a result of check valve leakage. The Operator needs to notify his Supervisor of this occurrence so that measures can be taken to stop the leakage.

Each header has a receiver tank designed to store a sufficient volume of air (100 ft^3) to start the diesel without assistance. One air receiver at > 210 psig will provide at least one fast start and five total starts.

Line purifiers downstream of the receivers remove particulate from the air prior to engine entry. Purifiers and compressor intake filters are on a preventive maintenance programs for periodic replacement.

Objective # 7

The Starting Air System can be used as a backup air supply to the Auxiliary Building Instrument Air System. A solenoid valve (VG-93 or 94) is used to allow air flow from the Starting Air System to the Instrument Air System if, the diesel speed is ≥ 95%, a valid Blackout signal is present and a Safety Injection Signal is not present. VG-95 & 96 or VG-97 & 98, which must be manually unlocked and opened to tie to VI, normally isolate the solenoid valves.

These VG to VI Auxiliary Building Air Tank isolation valves will automatically open after a 30 second time delay when the three conditions mentioned below are met:

1. Blackout
2. No Safety Injection
3. D/G speed > 95%

Once the solenoid valves have automatically opened, air can be supplied to the Auxiliary Building Blackout Air Receiver Tanks. If a safety injection actuation occurs, the solenoids will not open or will close if already open. This is because valves, which receive a safety injection signal, fail to a safe position. On a subsequent diesel shutdown, these solenoid valves automatically close. There are manually operated locked closed valves used to isolate this header from the VI header. This is because the piping downstream of the solenoids is not seismically qualified and could fail during a seismic event in conjunction with an emergency. Operators are sent to locally open these valves and remain with the valves until no longer needed.

The "LOSS OF VI" Abnormal Procedure (AP/1or2/A/5500/22) directs the operator to open the manual valves used to isolate the VG to VI solenoids when VG is required to supply the VI header. This will aid the operator in shutting down the plant during a unit Blackout where the Station Instrument Air Compressors are lost.

The Loss of VI Abnormal Procedure provides two situations when an operator is dispatched to the Diesel Room to open the VG to VI solenoid isolation valves.

If a valid blackout exists with no safety injection and the Diesel Generator has automatically started and loaded, then if there is a desire to supply the VI header using the VG system, an NLO will be sent to the Diesel Room to unlock and open these manual valves. This NLO is required to remain in the diesel room standing by in the event these manual valves need to be closed. The piping connecting the VG System to the VI System is not seismically qualified and if a seismic event occurs which can rupture this non-seismically qualified piping, the NLO is available to immediately close these manual valves and prevent a possible loss of VG supply to the diesel.

If a loss of VI to the Auxiliary Building Receivers occurs (Rupture of VI piping in Turbine/Service Building), the Loss of VI Abnormal Procedure allows the Control Room to dispatch an NLO to the diesel room and perform the following:

1. Start the Diesel Generator
2. Unlock and open the manual isolation valves to the VG to VI solenoids.
3. Standby in the diesel room in case a seismic event occurs.

The Control Room will also dispatch I&E to the diesel control panel to jumper open the VG to VI solenoid valve. These actions are taken to allow VG to supply the Auxiliary Building VI receivers following a major leak or rupture of the VI system piping supplying the Auxiliary Building receivers. In this event, the solenoid valves must be jumpered open by I&E because the conditions for the valve to automatically open do not exist.

1 Pt. Given the following conditions on Unit 1:

- Mode 3
- A small instrument leak inside Containment causes a slow rise in Containment pressure.
- Containment pressure is currently .5 psig

Which one of the following is the ~~appropriate~~ designed response to mitigate the Containment pressure rise?

A. Start one train of Containment Purge Fans.

B. Ensure VL AHUs shifted to high speed.

C. Increase RV flow to the VL AHUs.

D. Ensure VU AHUs shifted to high speed.

OK

Bank Question: 1143 **Answer: B**

1 Pt. Given the following conditions on Unit 1:

- Mode 3
- A small instrument leak inside Containment causes a slow rise in Containment pressure.
- Containment pressure is currently .5 psig

Which one of the following is the appropriate response to mitigate the Containment pressure rise?

A. Start one train of Containment Purge Fans.

B. Ensure VL AHUs shifted to high speed.

C. Increase RV flow to the VL AHUs.

D. Ensure VU AHUs shifted to high speed.

Distracter Analysis: The fact that the VL AHUs shift to high speed will significantly reduce Containment pressure.

A. **Incorrect**: Can not place VP in service in Mode 3.
Plausible: Student may think that VP can be placed in service.
B. **Correct**:
C. **Incorrect**: Can not increase RV flow to AHUs
Plausible: Prior to recent MOD RV flow could be maximized
D. **Incorrect:** VU do not shift to high speed
Plausible: student may have VU and VL confused

LEVEL: RO & SRO

KA: SYS 103 A1.01(3.7/4.1)

SOURCE: NEW used Kewanee NRC 2002 Exam as idea for question

LEVEL OF KNOWLEDGE: Memory

AUTHOR: CWS

LESSON: OP-MC-CNT-VUL

OBJECTIVES: OP-MC-CNT-VUL Obj. 4

REFERENCES: OP-MC-CNT-VUL page 31

SYSTEM:	**103 Containment System**		
K6	**Knowledge of the effect of a loss or malfunction on the following will have on the containment system:** (CFR: 41.7 / 45.7)		
K6.01	Valves	2.1*	2.3
K6.02	Controllers and positioners	1.9	2.1*
K6.03	Pumps	1.5	1.6
K6.04	Heat exchangers and condensers	1.5	1.7
K6.05	Breakers, relays, and disconnects	1.5	1.7
K6.06	Sensors and detectors	1.9	2.1
	ABILITY		
A1	**Ability to predict and/or monitor changes in parameters (to prevent exceeding design limits) associated with operating the containment system controls including:** (CFR: 41.5 / 45.5)		
A1.01	Containment pressure, temperature, and humidity	3.7	4.1
A2	**Ability to (a) predict the impacts of the following malfunctions or operations on the containment system- and (b) based on those predictions, use procedures to correct, control, or mitigate the consequences of those malfunctions or operations** (CFR: 41.5 / 43.5 / 45.3 / 45.13)		
A2.01	Integrated leak rate test	2.0*	2.6*
A2.02	Necessary plant conditions for work in containment	2.2	3.2*
A2 03	Phase A and B isolation	3.5*	3.8*
A2 04	Containment evacuation (including recognition of the alarm)	3.5*	3.6*
A2.05	Emergency containment entry	2.9	3.9
A3	**Ability to monitor automatic operation of the containment system, including:** (CFR: 41.7 / 45.5)		
A3.01	Containment isolation	3.9	4.2
A4	**Ability to manually operate and/or monitor in the control room:** (CFR: 41.7 / 45.5 to 45.8)		
A4.01	Flow control, pressure control, and temperature control valves, including pneumatic valve controller	3.2*	3.3
A4.02	Excess letdown divert valves to reactor coolant drain tank	2.1*	2.2*
A4.03	ESF slave relays	2.7*	2.7*
A4 04	Phase A and phase B resets	3.5*	3.5*

CLASSROOM TIME (Hours)

NLO	NLOR	LPRO	LPSO	LOR
2.0	2.0	2.0	2.0	1.0

OBJECTIVES

	OBJECTIVE	NLO	NLOR	LPRO	LPSO	LOR
1.	State the purpose of the following Containment Ventilation Subsystems • Upper Containment Ventilation System. • Lower Containment Ventilation System. • Control Rod Drive Ventilation System. • Incore Instrumentation Room Ventilation System.	X	X	X	X	
2.	State the source of cooling water to the upper and lower containment ventilation units.	X	X	X	X	
3.	Discuss the operation of the Containment Ventilation Systems (VU,VL,VR,VT) including the components operating during normal unit operations.	X	X	X	X	
4.	State the automatic actions that occur to the Lower Containment Ventilation units if containment pressure increases to 0.5 psig.	X	X	X	X	X
5.	Discuss the automatic alignment of the Containment Ventilation Systems (VU, VL, VR, VT) following a: • Safety Injection signal. • Blackout signal.		X	X	X	X
6.	Concerning the "Reset/Retransfer" switches: • List the units having a "Reset/Retransfer" switch. • Discuss the purpose and operation of the switch.	X	X	X	X	X
7.	Describe the local controls and indications associated with the Containment Ventilation Systems.	X	X	X	X	X
8.	Describe the Control Room controls and indications associated with the Containment Ventilation Systems.		X	X	X	X

3.0 SYSTEM OPERATION

3.1. Normal Operation

VL System Operation

Objective #3

Typical configurations for operation of the VL ventilation units are listed as follows in order of increasing cooling capacity:

1. **Two to four units at low speed**
2. **Three units at high speed with one standby unit, and**
3. **Four units at high speed.**

The number of ventilation units needed to cool lower Containment depends upon the season of the year, the cooling water inlet temperature, and the Containment heat load. The lower containment heat load has decreased due to improvements in insulation techniques. Therefore, operation with only two VL AHUs in low speed is now possible. The most desirable configuration for operation of the ventilation units is low speed operation. This will minimize the wear and required maintenance on the units. Optimum VL AHU and RV Pump configuration is based on Lower Containment Weighted Average Temperature (LCWAT), the number of VL AHUs in operation and the speed the VL AHUs are operating in. In Modes 1 through 5 , RN is the preferred source of cooling water. RV pumps can supply cooling, but are not the preferred source. In Mode 6, or No Mode, cooling water is not required.

[redacted]

At the initiation of the 0.5 psig lower Containment pressure signal, all four VL air handling units and both Pipe Tunnel Booster Fans will start and switch to "HI" speed. HVAC switch control is regained when pressure is less than 0.5 psig.

The pressurizer booster fans have an electric interlock so that both fans can not be operated at the same time. One fan is operated during normal operation. One pipe tunnel booster fan is operated in "High" speed during normal operation. Each steam generator area booster fan operates during normal operation.

VR System Operation

Objective #3

Normal operation will consist of running a minimum of three (3) of the four (4) VR fans.

..103.a1.01 | 9/6/2002

Kewaunee 1 | Exam Level R | Mark Question | Print Recor | New Searc | Exit

Question

Given the following plant conditions:

- The plant is operating at 100% power.
- A small instrument air leak inside Containment causes a slow rise in Containment pressure.
- Containment pressure is currently 1.7 psig.

In order to ensure adequate margin to Containment design pressure is maintained, which ONE of the following indicates the appropriate action to reduce Containment pressure ?

Answer: The Containment should be vented using the Post-LOCA 2 inch vent lines.

Distracter 1 All Containment Fan Coil Units should be started or verified running.

Distracter 2 One Containment vacuum breaker should be opened (after obtaining a discharge permit).

Distracter 3 The Containment should be vented using the 36" RBV valves.

Distracter Analysis:

Answer: Explanation:With the Containment Pressure rising due to air line leakage, the only way to reduce pressure is to purge air from Containment.

Distracter 1:

Distracter 2:

Distracter 3:

Bank Question: 1144 **Answer: C**

1 Pt. Given the following conditions on Unit 1:

- Small break LOCA
- Containment Pressure is 3.2 psig
- NO CA flow available
- EP/1/A/5000/E-1, Loss of Reactor or Secondary Coolant has been implemented

Which one of the following is the earliest time entry condition into EP/1/A/5000/FR-H.1, Loss of Secondary Heat Sink is met?

Time Highest Reading S/G N/R Level	0200	0210	0220	0230
'A' S/G	35%	33%	31%	29%
'B" S/G	31%	31%	30%	30%
'C' S/G	34%	31%	31%	29%
'D' S/G	32%	30%	29%	28%

A. 0200

B. 0210

C. 0220

D. 0230

Distracter Analysis:.

A. Incorrect:
Plausible:
B. Incorrect:
C. Correct:
Plausible:
D. Incorrect
Plausible:

LEVEL: RO & SRO

KA: 103 G2.4.2 (3.9/4.1)

SOURCE: NEW

LEVEL OF KNOWLEDGE: Memory

AUTHOR: CWS

LESSON: O-MC-EP-FRH

OBJECTIVES: OP-MC-EP-FRH Obj. 2

REFERENCES: OP-MC-EP-FRH page 11
EP/1A/5000/F-0 page 6

(U)

---

1 Pt. Given the following conditions on Unit 1:

- Small break LOCA
- Containment Pressure is 3.2 psig
- NO CA flow available
- EP/E-1 (Loss of Reactor or Secondary Coolant) has been implemented

Which one of the following is the earliest time entry conditions into FR-H-1 are met?

Time		0200	0210	0220	0230
S/G N/R Levels	A	~~35~~ 35%	~~25%~~ 33	~~15%~~ 31	5% 29
	B	31	33	30	30
A.	**0200**	C 34	31	31	29
B.	**0210**	D 32	31	29	28
C.	**0220**		30		
D.	**0230**				

No correct answer
earliest time is @ 30% NR level
Also all S/Gs would not read exactly the same

Bank Question: 1144 **Answer: B**

1 Pt. Given the following conditions on Unit 1:

- Small break LOCA
- Containment Pressure is 3.2 psig
- NO CA flow available
- EP/E-1 (Loss of Reactor or Secondary Coolant) has been implemented

Which one of the following is the earliest time entry conditions into FR-H-1 are met?

Time	0200	0210	0220	0230
S/G N/R Levels	35%	25%	15%	5%

A. 0200

B. 0210

C. 0220

D. 0230

Distracter Analysis:.

A. Incorrect:
Plausible:
B. Correct:
C. Incorrect:
Plausible:
D. Incorrect
Plausible:

LEVEL: RO & SRO

KA: 103 G2.4.2 (3.9/4.1)

SOURCE: NEW

LEVEL OF KNOWLEDGE: Memory

AUTHOR: CWS

LESSON: O-MC-EP-FRH

OBJECTIVES: OP-MC-EP-FRH Obj. 2

REFERENCES: OP-MC-EP-FRH page 11
EP/1A/5000/F-0 page 6

2.4 Emergency Procedures /Plan

2.4.1 **Knowledge of EOP entry conditions and immediate action steps.**
(CFR: 41.10 / 43.5 / 45.13)
IMPORTANCE RO 4.3 SRO 4.6

2.4.2 **Knowledge of system set points, interlocks and automatic actions associated with EOP entry conditions.**
(CFR: 41.7 / 45.7 / 45.8)
Note: The issue of setpoints and automatic safety features is not specifically covered in the systems sections).
IMPORTANCE RO 3.9 SRO 4.1

2.4.3 **Ability to identify post-accident instrumentation.**
(CFR: 41.6 / 45.4)
IMPORTANCE RO 3.5 SRO 3.8

2.4.4 **Ability to recognize abnormal indications for system operating parameters which are entry-level conditions for emergency and abnormal operating procedures.**
(CFR 41.10 / 43.2 / 45.6)
IMPORTANCE RO 4.0 SRO 4.3

2.4.5 **Knowledge of the organization of the operating procedures network for normal, abnormal, and emergency evolutions.**
(CFR: 41.10 / 43.5 / 45.13)
IMPORTANCE RO 2.9 SRO 3.6

2.4.6 **Knowledge symptom based EOP mitigation strategies.**
(CFR: 41.10 / 43.5 / 45.13)
IMPORTANCE RO 3.1 SRO 4.0

2.4.7 **Knowledge of event based EOP mitigation strategies.**
(CFR: 41.10 / 43.5 / 45.13)
IMPORTANCE RO 3.1 SRO 3.8

2.4.8 **Knowledge of how the event-based emergency/abnormal operating procedures are used in conjunction with the symptom-based EOPs.**
(CFR: 41.10 / 43.5 / 45.13)
IMPORTANCE RO 3.0 SRO 3.7

CLASSROOM TIME (Hours)

*p704Y

NLO	NLOR	LPRO	LPSO	LOR
		3	3	2.5

OBJECTIVES

SEQ	OBJECTIVE	NLO	NLOR	LPRO	LPSO	LOR
1	Explain the purpose of each procedure in the FR-H series. EPFRH001			X	X	
2	Discuss the entry and exit guidance for each procedure in the FR-H series. EPFRH002			X	X	
3	Discuss the mitigating strategy (major actions) of each procedure in the FR-H series. EPFRH003			X	X	X
4	Discuss the basis for any note, caution or step for each procedure in the FR-H series. EPFRH004			X	X	X
5	Given the Foldout page, discuss the actions included and the basis for these actions. EPFRH005			X	X	X
6	Given the appropriate procedure, evaluate a given scenario describing accident events and plant conditions to determine any required action and its basis. EPFRH006			X	X	X
7	Discuss the time critical task(s) associated with the FR-H series procedures including the time requirements and the basis for these requirements. EPFRH007			X	X	X

2.0 PROCEDURE SERIES BACKGROUND

Procedure FR-H.1, Loss of Secondary Heat Sink, provides guidance to address an extreme challenge (i.e., RED priority) to the Heat Sink Critical Safety Function. This challenge results if total feed flow is below a minimum value and level is below the narrow range (N/R) in all S/Gs at any time.

An early indication that secondary heat transfer capability may be challenged is that CA flow is not available to any S/G. Following a reactor trip and safety injection (S/I), main feedwater isolation is automatically initiated. CA flow to the S/Gs must be automatically or manually initiated in order to maintain adequate secondary inventory for decay heat removal. Consequently, a failure of the CA system results in a challenge to the Heat Sink Critical Safety Function. If reactor trip and S/I occur, the operation of the CA system is verified in Step 8 of procedure E-0, Reactor Trip Or Safety Injection, prior to Status Tree monitoring. In E-0, Step 16, If minimum CA flow is not being provided, the operator is directed to implement the Critical Safety Function Status Trees and exit to FR-H.1.

The objective of FR-H.1 is to maintain NC system heat removal capability by establishing either:

1. Feed flow to a S/G, or
2. NC system feed and bleed.

FR-H.1 is entered at the first indication that secondary heat removal capability may be challenged. This permits maximum time for operator action to restore feedwater flow to at least one S/G before secondary inventory is depleted and secondary heat removal capability is lost. Once secondary heat removal capability is lost, feed and bleed must be established to minimize core uncovery and prevent an inadequate core cooling condition.

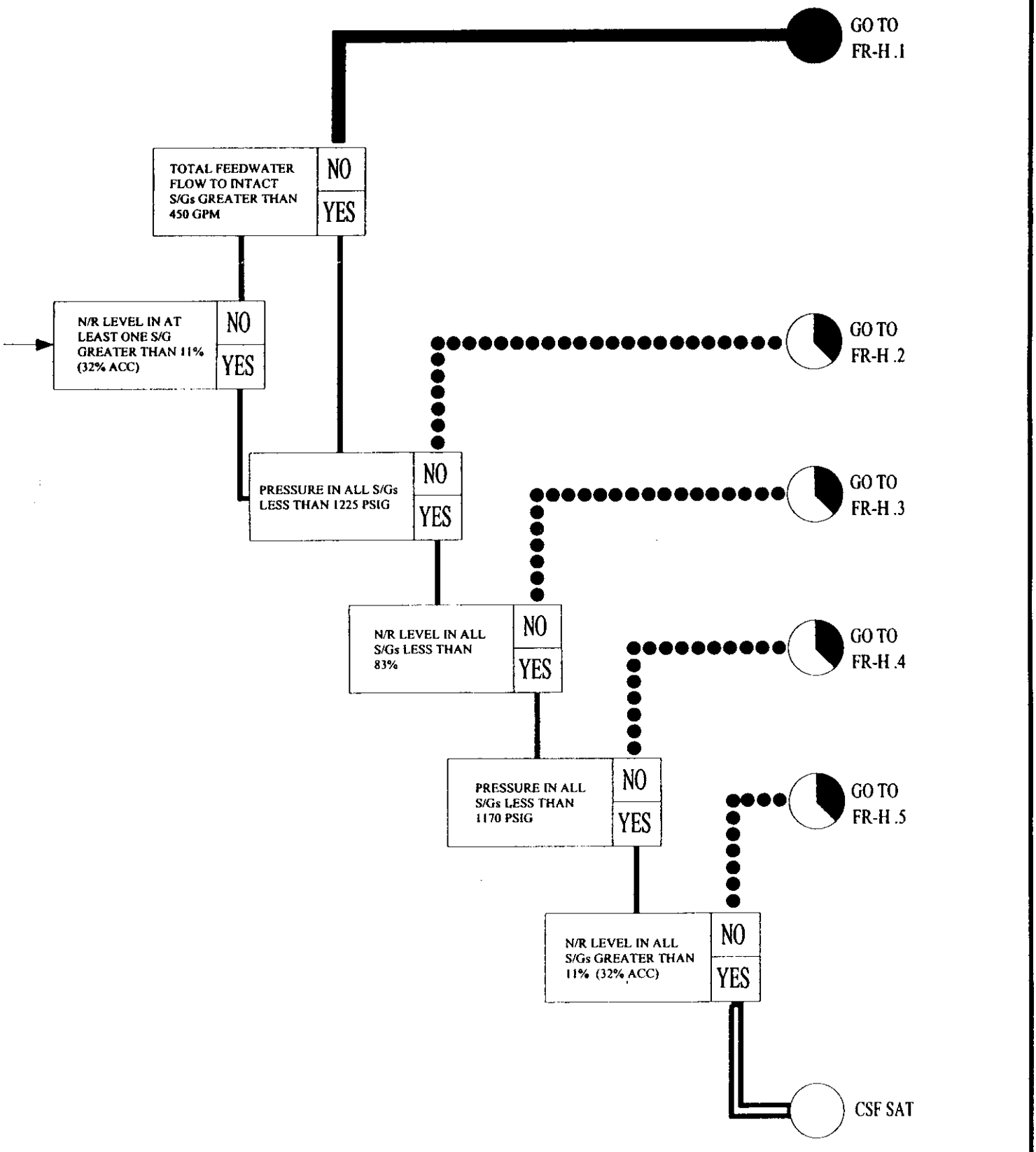
TOTAL FEEDWATER FLOW TO INTACT S/Gs GREATER THAN 450 GPM
NO
YES
GO TO FR-H .1
N/R LEVEL IN AT LEAST ONE S/G GREATER THAN 11% (32% ACC)
NO
YES
GO TO FR-H .2
PRESSURE IN ALL S/Gs LESS THAN 1225 PSIG
NO
YES
GO TO FR-H .3
N/R LEVEL IN ALL S/Gs LESS THAN 83%
NO
YES
GO TO FR-H .4
PRESSURE IN ALL S/Gs LESS THAN 1170 PSIG
NO
YES
GO TO FR-H .5
N/R LEVEL IN ALL S/Gs GREATER THAN 11% (32% ACC)
NO
YES
CSF SAT

1 Pt. Which of the following Control Rod Drive events would require notifying offsite agencies and match the correct emergency communication system method to the correct agency?

A. **Two dropped rods from normal 100% power operations.**
Use Selective Signaling Telephone to notify State and counties.

B. **Two dropped rods from normal 100% power operations.**
Use Selective Signaling Telephone to notify the NRC.

C. **Ejected rod while performing a reactor startup.**
Use Selective Signaling Telephone to notify State and counties.

D. **Ejected rod while performing a reactor startup.**
Use Selective Signaling Telephone to notify the NRC.

Give the event/classification AND let RO pick system

Bank Question: 1145 **Answer: C**

---

1 Pt. Which of the following Control Rod Drive events would require notifying offsite agencies and match the correct emergency communication system method to the correct agency? As Some

A. Two dropped rods from normal 100% power operations. Use Selective Signaling Telephone to notify State and counties.

B. Two dropped rods from normal 100% power operations. Use Selective Signaling Telephone to notify the NRC.

C. Ejected rod while performing a reactor startup. Use Selective Signaling Telephone to notify State and counties.

D. Ejected rod while performing a reactor startup. Use Selective Signaling Telephone to notify the NRC.

Distracter Analysis:. The only event listed that would require notifying the state and counties is the ejected rod. This would be at least an Alert event classification. The Selective Signaling telephone is the method by which the state and counties are notified.

Good knowledge

A. Incorrect:
Plausible:

B. Incorrect:
Plausible:

C. Correct:

D. Incorrect
Plausible:

LEVEL: RO & SRO

KA: 001GK2.4.43 (2.8/3.5)

SOURCE: NEW

LEVEL OF KNOWLEDGE: Memory

AUTHOR: CWS

LESSON: OP-MC-EP-EAL

OBJECTIVES: OP-MC-EP-EAL Obj. 6
EP-MC-OACLS-02 Obj. 4

REFERENCES: OP-MC-EP-EAL page 11

2.4 Emergency Procedures /Plan (Continued)

2.4.35 **Knowledge of local auxiliary operator tasks during emergency operations including system geography and system implications.**
(CFR: 43.5 / 45.13)
IMPORTANCE RO 3.3 SRO 3.5

2.4.36 **Knowledge of chemistry / health physics tasks during emergency operations.**
(CFR: 43.5)
IMPORTANCE RO 2.0 SRO 2.8

2.4.37 **Knowledge of the lines of authority during an emergency.**
(CFR: 45.13)
IMPORTANCE RO 2.0 SRO 3.5

2.4.38 **Ability to take actions called for in the facility emergency plan, including (if required) supporting or acting as emergency coordinator.**
(CFR: 43.5 / 45.11)
IMPORTANCE RO 2.2 SRO 4.0

2.4.39 **Knowledge of the RO's responsibilities in emergency plan implementation.**
(CFR: 45.11)
IMPORTANCE RO 3.3 SRO 3.1

2.4.40 **Knowledge of the SRO's responsibilities in emergency plan implementation.**
(CFR: 45.11)
IMPORTANCE RO 2.3 SRO 4.0

2.4.41 **Knowledge of the emergency action level thresholds and classifications.**
(CFR: 43.5 / 45.11)
IMPORTANCE RO 2.3 SRO 4.1

2.4.42 **Knowledge of emergency response facilities.**
(CFR: 45.11)
IMPORTANCE RO 2.3 SRO 3.7

2.4.43 **Knowledge of emergency communications systems and techniques.**
(CFR: 45.13)
IMPORTANCE RO 2.8 SRO 3.5

TERMINAL OBJECTIVE:

Upon completion of this lesson, personnel assigned to transmit emergency notifications to offsite agencies will have a thorough understanding of the procedures used to perform the role of the Offsite Agency Communicator.

ENABLING OBJECTIVES:

1. Briefly describe how the following procedures are used to develop and transmit emergency notifications:
   - RP/0/A/5700/001
   - RP/0/A/5700/002
   - RP/0/A/5700/003
   - RP/0/A/5700/004
   - RP/0/A/5700/014

2. State the difference between an initial and a follow-up notification.

3. State the time requirements for:

   - Initial Notifications
   - Follow-up Notifications

4. List the Offsite Agencies required to be notified during an emergency.Understand how to operate the following communications equipment:

   - Selective Signal
   - Commercial phone line (ROLM)
   - Duke Power Radio Systems
   - FAX Machine

5. Explain the information (line by line) required to complete an Emergency Notification Form and where the information can be obtained.

CLASSROOM TIME (Hours)

NLO	NLOR	LPRO	LPSO	LOR
0	3.0	3.0	3.0	3.0

OBJECTIVES

	OBJECTIVE	NLO	NLOR	LPRO	LPSO	LOR
1	List the Emergency Classifications in order of severity.		X	X	X	X
2	State how Initiating Conditions and Emergency Action Levels are used to determine the appropriate Emergency Class.		X	X	X	X
3	State the immediate actions of RP/O/A/5700/000.		X	X	X	X
4	Describe the Emergency Declaration Guidelines as listed in RP/O/A/5700/00 Enclosure 4.9.		X	X	X	X
5	Describe the method to determine the appropriate "Event Time" as described in RP/O/A/5700/000 Enclosure 4.9.		X	X	X	X
6	Given a set of plant conditions, determine the appropriate Emergency Classification.		X	X	X	X
7	Given a set of conditions, determine the appropriate Event Time.		X	X	X	X
8	Define the following terms as they apply to EALs: • ALL • Civil Disturbance • Explosion • Fire • Inability to directly monitor • Significant Transient • Uncontrolled • Unplanned • Valid • Visible damage		X	X	X	X
9	State the guidelines concerning momentary entry into a higher classification.		X	X	X	X

Objective # 1

Alert

Definition: Events are in process or have occurred which involve an actual or potential substantial degradation of the level of safety of the plant. Any releases are expected to be small fractions of the EPA Protective Action Guideline exposure levels.

Response to an Alert includes all responses for Unusual Event and:

- Activation of the TSC, OSC, and EOF
- Site Assembly
- Possible activation of County and State EOC's
- Off-site agency notifications
- Possible mobilization of field monitoring teams

Example initiating conditions per Numarc IC/EALs:

- Unisolable leak exceeding the capacity of one charging pump in the normal mode with letdown isolated.
- Valid reactor trip signal received or required and automatic reactor trip was not successful **and** manual reactor trip was successful and reactor power is less than 5%.
- Loss of all offsite power and onsite AC power as indicated by loss of power to both ETA and ETB and failure to restore power to at least on essential bus within 15 minutes in Modes 5,6,No Mode.
- CSF status-Core Cooling Red path

Objective # 1

Site Area Emergency

Definition: Events are in process or have occurred which involve actual or likely major failures of plant functions needed for protection of station personnel and the public. Any releases are not expected to result in exposure levels which exceed EPA Protective Action Guideline exposure levels except near the site boundary.

Response to a Site Area Emergency includes all responses for Alert and:

- Activation of County and Station EOC's.
- Possible mobilization of field monitoring teams.
- Possible evacuation of non-essential Station personnel.
- Consultation with offsite authorities regarding possible public protective actions.
- Alerting the public via the siren system and provide notification via the Emergency Broadcast System at discretion of the Counties.

2.10 Complete Line 16 as follows:

☐ 2.10.1 Have the Emergency Coordinator approve.

☐ 2.10.2 Record time/date.

3. Transmit the message to Offsite Agencies as follows:

_____ 3.1 **IF** an upgrade in classification occurs while transmitting any message, perform the following:

☐ 3.1.1 Notify agencies that an upgrade has occurred and that new information will be supplied within 15 minutes.

☐ 3.1.2 Suspend any further transmission of the message that was being transmitted. {PIP-M-01-3711}

3.2 Establish communications with Offsite Agencies as follows:

☐ 3.2.1 Use the Selective Signaling Telephone by depressing "* (star) 1".

_____ 3.2.2 **IF** Selective Signaling Telephone fails, notify the Offsite Agencies in the order listed:

☐	3.2.3.1	Iredell County:	1-704-878-3039
☐	3.2.3.2	Mecklenburg County:	704-943-6200
☐	3.2.3.3	Gaston County:	1-704-866-3300
☐	3.2.3.4	Lincoln County:	1-704-735-8202
☐	3.2.3.5	Catawba County:	1-828-464-3112
☐	3.2.3.6	State Warning Point:	1-919-733-3943
☐	3.2.3.7	Cabarrus County:	1-704-920-3000

_____ 3.2.3 **IF** the Selective Signaling Telephone and outside bell lines fail, use the County Response Radio by depressing "20".

1 Pt. Given the following conditions on Unit 1:

- Unit initially 100% power
- All four reactor coolant pumps trip due underfrequency relay malfunction
- Reactor trip occurs

Which one of the following correctly describes the automatic response of the feedwater system to the above transient and the reason for this response?

A. **CFPTs go to rollback hold,**
CA auto starts at 17% S/G level
Maintain required Heat Sink

B. **CFPTs trip,**
CA auto starts due to feed pumps trip
Maintain required Heat Sink

C. **CFPTs go to rollback hold,**
CA auto starts at 17% S/G level
Maintain S/Gs no load level

D. **CFPTs trip,**
CA auto starts due to feed pumps trip
Maintain S/Gs no load level

---

must ensure s/g levels do not go < 17% for this transient.

otherwise OK

Bank Question: 1146 **Answer: A**

1 Pt. Given the following conditions on Unit 1:

- Unit initially 100% power
- All four reactor coolant pumps trip due underfrequency relay malfunction
- Reactor trip occurs

Which one of the following correctly describes the automatic response of the feedwater system to the above transient and the reason for this response?

A. **CFPTs go to rollback hold,**
CA auto starts at 17% S/G level
Maintain required Heat Sink

B. **CFPTs trip,**
CA auto starts due to feed pumps trip
Maintain required Heat Sink

C. **CFPTs go to rollback hold,**
CA auto starts at 17% S/G level
Maintain S/Gs no load level

D. **CFPTs trip,**
CA auto starts due to feed pumps trip
Maintain S/Gs no load level

Distracter Analysis: CFPTs do not trip when the Reactor trips. They go to rollback hold. CA will auto start due to S/G lo level of 17%. If student thinks the reactor trip will cause both CFPTs to trip, then this would auto start CA.

A. **Correct**:
B. **Incorrect**: CFPTs do not trip on a Reactor trip.
Plausible:
C. **Incorrect**: CA does not maintain S/Gs at no load level.
Plausible:
D. **Incorrect** CFPTs do not trip on a Reactor trip
Plausible:

LEVEL: RO & SRO

KA: 00275 K5.16(3.5/4.0)

SOURCE: NEW

LEVEL OF KNOWLEDGE: Comprehension

AUTHOR: CWS

LESSON: OP-MC-CF-CA, OP-MC-CF-LF

OBJECTIVES: OP-MC-CF-CA Obj. 1 and 4, OP-MC-CF-LF Obj.17

REFERENCES: OP-MC-CF-CA page 13, OP-MC-CF-LF page 33

K5.13	Causes of circulation.	3.5	3.9
K5.14	Consequences of forced circulation loss.	3.8	4.2
K5.15	Reasons for maintaining subcooling margin during natural circulation	4.2	4.6
K5.16	Reason for automatic features of the Feedwater control system during total loss of reactor coolant flow	3.5	4.0
K5.17	Need for monitoring in-core thermocouples during natural circulation.	3.8	4.2
K5.18	Brittle fracture	3.3	3.6
K5.19	Neutron embrittlement	2.6	2.9
K5.20	Corrosion control principles	2.3	2.7
K6	**Knowledge of the effect or a loss or malfunction on the following RCS components:** (CFR: 41.7 / 45.7)		
K6.01	RCS valves that may pose and unusually high radiological Hazard because of trapped crud	2.2	2.9
K6.02	RCP	3.6	3.8
K6.03	Reactor vessel level indication	3.1	3.6
K6.04	RCS vent valves	2.5	2.9
K6.05	Valves	2.1	2.4
K6.06	Sensors and Detectors	2.5	2.8
K6.07	Pumps	2.5	2.8
K6.08	Controllers and Positioners	2.4	2.7
K6.09	Motors	2.1	2.5
K6.10	Breakers, relays, and disconnects	2.2	2.4
K6.11	Thermal sleeves	2.2	2.6
K6.12	Code Safety valves	3.0	3.5
K6.13	Reactor vessel and internals	2.3	2.8
K6.14	Core components	2.2	2.8
K6.15	Post-accident sampling	TBD	TBD

ABILITY

A1	**Ability to predict and/or monitor changes in parameters (to prevent exceeding design limits) associated with operating the RCS controls including:** (CFR: 41.5 / 45.7)		
A1.01	Primary and secondary pressure	3.8	4.1
A1.02	PZR and makeup tank level	3.6	3.9
A1.03	Temperature	3.7	3.8
A1.04	Subcooling Margin	3.9	4.1
A1.05	RCS flow	3.4	3.7
A1.06	Reactor power	4.0	4.0
A1.07	Reactor differential temperature	3.3	3.5
A1.08	RCS average temperature	3.7	3.8
A1.09	RCS T-ave	3.7	3.8
A1.10	RCS T-ref	3.7	3.8
A1.11	Relative level indications in the RWST, the refueling cavity, the PZR and the reactor vessel during preparation for refueling	2.7	3.2

CLASSROOM TIME (Hours)

NLO	NLOR	LPRO	LPSO	LOR
3.0	2.0	3.0	3.0	1.5

OBJECTIVES

	OBJECTIVE	NLO	NLOR	LPRO	LPSO	LOR
1	State the purpose of the CA System.	X	X	X	X	
2	Sketch the system drawing (Fig. 7.1) including all major components and valves, show all tie-ins to associated systems.	X	X	X	X	
3	Describe all CA suction supply sources, including venting requirements and actions.	X	X	X	X	
4	Discuss the auto-start of the motor driven and turbine driven auxiliary feedwater pumps, including concurrent BO/S_S signals and BO followed by S_S.	X	X	X	X	X
5	Describe the CA pump minimum flow and pump runout protection.	X	X	X	X	
6	Describe the function of the Auto Start Defeat Switches; include permissives.	X	X	X	X	X
7	Describe the power supplies and steam supplies for the CA pumps.	X	X	X	X	
8	State the flow rates of the CA pumps.	X	X	X	X	
9	Describe the sources of make-up to the Auxiliary Feedwater Storage Tank, include destination of overflow from the Auxiliary Feedwater Storage Tank.	X	X	X	X	X
10	Describe the interlock between the CA motor driven pump and the associated train RN pump. Include why the interlock is required.	X	X	X	X	X
11	Describe the interlock between the CA pump suction pressure and the RN assured makeup valves.	X	X	X	X	X
12	Describe the interlock between the RN assured makeup valves (CA-15, CA-18) and the DG Hx Inlet Valve. Include why the interlock is required.	X	X	X	X	X

1.0 INTRODUCTION

1.1 Purpose

Objective # 1

The auxiliary feedwater system is provided as a backup for the main feedwater system. It is designed as a means to dissipate heat from the Reactor Coolant System when normal systems are not available. The auxiliary feedwater system may also be used in normal plant startup and shutdown, as main feedwater, when the flow is less than 3% maximum design feedwater flow.

1.2 General Description

Objective # 2

Refer to Figure 7.1, 7.2, 7.3, 7.13. The CA system assures required feedwater flow to the steam generators for reactor coolant thermal energy dissipation when the CF system is not available through loss of power or other malfunctions. The CA system is required to operate until normal feedwater flow is restored or until the reactor coolant temperature is lowered to the point where the ND system can be utilized. The CA system is designed to start automatically for any event requiring emergency feedwater. Since the CA system is the only source of makeup water to the steam generators for reactor coolant heat removal when the main feedwater system becomes inoperable, it has been designed with redundancy and diversity. The CA system contains two motor driven pumps and one steam turbine driven pump for each unit.

2.0 COMPONENT DESCRIPTION

2.1 Motor Driven CA Pumps

Objective # 4, 7, 8

The motor driven CA pumps are powered from essential power, ETA (pump A) and ETB (pump B). Each motor driven pump has a design flow rate of 450 gpm and is capable of supplying two steam generators. CA pump "A" supplies steam generators "A" and "B" while CA pump "B" supplies steam generators "C" and "D."

Refer to Figure 7.12. The auto-start signals for the CA Motor Driven pumps are:

- 2/4 detectors low-low level in any one SG (17%)
- Trip of both Main Feedwater pumps
- AMSAC
    - Both Feedwater pumps tripped
    - Loss of flow to 3/4 SGs
- S_S signal
- Blackout signal

SEQ	OBJECTIVE	NLO	NLOR	LPRO	LPSO	LOR
16	Describe the steps used by the operator to place CFPT Control from Percent (%) Hold to either Percent (%) Startup or Percent (%) Feedwater Modes. CFLF016		X	X	X	X
17	Describe the Rollback Hold Mode and its design basis. CFLF017		X	X	X	X
18	Describe the Level Indication and Testing associated with the CFPT Lube Oil Reservoir. CFLF018	X	X			
19	State the Mechanical and Electrical CFPT trips and the setpoints associated with each. CFLF019		X	X	X	X
20	Discuss the following alarms/status indications: • CF Pump Turbine A(B) Lo Vacuum • A(B) Loss of Trip and Reset DC Power • Thrust Bearing A(B) Excessive Wear • CFPT Condenser A(B) Emergency Backwash • CFPT A(B) Tripped CFLF020		X	X	X	X
21	Given a Limit and/or Precaution associated with an operating procedure, discuss its basis and applicability. CFLF021	X	X	X	X	X
22	Describe the method used to place the Turning Gear in service. CFLF022	X	X			
23	State the purpose of the motor operated drain valves associated with the Stop and Governor Valves. CFLF023		X	X	X	X

Objective # 16

Once the signal from the 7300 cabinet has been repaired and the M/A station placed in Manual, the operator must match the % Feedwater reading to the % Hold reading. Once the signals are matched, the operator will cycle the "Hold/Reset" toggle switch. The system will now be controlled by the operator using the M/A station.

Rollback Hold Mode

Objective # 17

Rollback Hold Mode actuates on a reactor trip and/or Manual feedwater Isolation initiation. Once the Rollback Hold Mode signal has actuated, the manual loader for the CFPT will go to 25% demand, which should correspond to approximately 3000 rpm. The actual speed of the CFPT is dependent on the steam supply at the time of the Rollback Hold actuation. The 25% demand on the manual loader positions the steam inlet valves on the CFPT to a pre-determined valve position. The steam supply available at the time of the actuation determines the rpm of the CFPT. If the CFPTs are being supplied from auxiliary steam or main steam at low power, and the Rollback Hold is actuated the manual loader will go to 25%. However the actual rpm of the feedwater pump may be less than 3000 rpm due to the steam supply alignment.

NOTE: *If the Feedwater Isolation Resets are depressed when the Reactor Trip Breakers are Opened, the CFPT will not experience a Rollback Hold.*

Objective # 16

The M/A station will automatically kick to Manual with a zero output. This corresponds to a 0 rpm output. To place the CFPT back in service, it is necessary to Reset both trains of Feedwater Isolation. A display of 25% will be displayed in the % Hold window. To enable the Rollback Hold circuit to initiate another rollback, both the A and B Train Reactor Trip Breakers must be Closed. Now adjust the % Feedwater to the 25% Feedwater value. Once the two signals are matched, the operator will cycle the "Hold/Reset" toggle switch. This shifts the system out of % Hold and places it in the % Feedwater Mode. The operator may then use the M/A station to control the CFPT.

Note: *Before a CFPT can be Reset from Rollback Hold, the Reset pushbuttons for both trains of Feedwater Isolation must be depressed. This is regardless of whether a Feedwater Isolation has occurred or not.*

2.7.4 Lube Oil Reservoir Alarms

Objective # 18

Each reservoir is equipped with a separate oil level alarming system relative to centerline. The levels monitored are:

High Level	**+ 16 inches**
Low Level	**+ 1 inch**
Very Low Level	**- 12 inches**

1 Pt.

Unit 2 was at 100% normal power operation when a Rod Deviation Monitor alarm was received. Channel N41 NIS is indicating an AFD anomaly at 10%. AFD is reading -2% on the other three NIS channels.

Which one of the following indications can be used to determine if an actual AFD deviation exists on channel N41 NIS?

A. **Reduction in Core Rated Thermal Power**

B. **Incore flux map.** channel deviations

C. **Reactor Coolant Loop Tave ~~deviations~~**

D. **Unexplained increase in Reactor Coolant Tave** explain?

Challenge with non TS required LCO vice 12% Δ AFD.

Bank Question: 1147 **Answer: B**

1 Pt. Unit 2 was at 100% normal power operation when a Rod Deviation Monitor alarm was received. Channel N41 NIS is indicating an AFD anomaly at 10%. AFD is reading -2% on the other three NIS channels.

Which one of the following indications can be used to determine if an actual AFD deviation exists on channel N41 NIS?

A. Reduction in Core Rated Thermal Power

B. Incore flux map.

C. Reactor Coolant Loop Tave deviations

D. Unexplained increase in Reactor Coolant Tave

Distracter Analysis:.

A. Incorrect:
Plausible:
B. Correct:
C. Incorrect:
Plausible:
D. Incorrect

LEVEL: RO & SRO

KA: 015 K4.09 (2.8/3.3)

SOURCE: NEW

LEVEL OF KNOWLEDGE: Comprehension

AUTHOR: CWS

LESSON: OP-MC-IC-ENA

OBJECTIVES: OP-MC-IC-ENA Obj. 1

REFERENCES: OP-MC-IC-ENA page 11

SYSTEM: **015 Nuclear Instrumentation System (NIS)**

K4	**Knowledge of NIS design feature(s) and/or interlock(s) provide for the following:** (CFR: 41.7)		
K4.01	Source-range detector power shutoff at high powers	3.1	3.3
K4.02	Rod motion inhibits	3.7	3.9
K4.03	Reading of source range/intermediate range/power range outside control room	3.9*	4.0*
K4.04	Slow response time of SPNDs	3.4?	3.6?
K4.05	Reactor trip	4.3	4.5
K4.06	Reactor trip bypasses	3.9	4.2
K4.07	Permissives	3.7	3.8
K4.08	Automatic rod motion on demand signals	3.4	3.7
K4.09	Redundant sources of information on axial flux density distribution	2.8	3.3 OK
K4.10	Redundant sources of information on power level	3.2	3.5
K5	**Knowledge of the operational implications of the following concepts as they apply to the NIS:** (CFR: 41.5 / 45.7)		
K5.01	Deleted		
K5.02	Discriminator/compensation operation	2.7	2.9
K5.03	Calibration adjustments	2.3*	2.6
K5.04	Factors affecting accuracy and reliability of calorimetric calibrations	2.6	3.1
K5.05	Criticality and its indications	4.1	4.4
K5.06	Subcritical multiplications and NIS indications	3.4	3.7
K5.07	Effects of burning on axial flux density	2.7?	2.9?
K5.08	Enthalpy	2.0	2.3*
K5.09	In-core detector operation	2.5	2.9
K5.10	Ex-core detector operation	2.8	3.0
K5.11	Axial flux imbalance, including long-range effects	3.3	3.7
K5.12	Quadrant power tilt, including long-range effects	3.2	3.6
K5.13	Peaking and hot-channel factor	3.1	3.5
K5.14	Neutron flux density, definition and relation to reactor power	2.8	3.1
K5.15	Effects of xenon on local flux, and factors affecting xenon concentrations	3.3	3.7
K5.16	Definition and calculation of quadrant tilt ratio	2.9	3.4
K5.17	DNB and DNBR definition and effects	3.5	3.7
K5.18	Definition of reactor poison	2.9	3.2
K5.19	Heat balance	2.9	3.2

CLASSROOM TIME (Hours)

NLO	NLOR	LPRO	LPSO	LOR
	1	1	1	0.5

OBJECTIVES

	OBJECTIVE	NLO	NLOR	LPRO	LPSO	LOR
1	State the purpose of the Incore Detector System.		X	X	X	
2	Describe the function of the major components in the Incore Detector System.		X	X	X	
3	Explain how movable incore detectors are moved through various paths.		X	X	X	
4	Describe the operation of the Incore Detector System Leak Detection System.		X	X	X	
5	State the purpose of the Incore Thermocouple System.		X	X	X	
6	Describe the theory of operation, including failure modes, of the Incore Thermocouple System.		X	X	X	X
7	Describe the purpose of the Reference Junction Box.		X	X	X	
8	Identify the controls and indications of the Incore Thermocouple System.		X	X	X	
9	Given a Limit and/or Precaution associated with an operating procedure, discuss its basis and applicability.		X	X	X	X

1.0 INTRODUCTION

1.1 Purpose

Objective # 1

The Movable Incore Detector System measures neutron flux distribution in order to confirm reactor design parameters, calculate hot channel factors, determine fission power distribution, control rod position, and provide periodic calibration of Excore Nuclear Instruments.

Objective # 5

The Incore Thermocouple System measures fuel assembly outlet temperature in order to confirm reactor design parameters, calculate hot channel factors, and calculate coolant enthalpy distribution.

1.2 General Description

Reference Figure 7.1. The Movable Incore Detector System provides a three-dimensional measurement of the reactor core power profile. A flux map is the measure of the neutron intensity of many areas of the reactor core and the map is produced by making successive passes of a neutron sensitive detector axially through the reactor core. The data taken in these passes, in the form of detector current magnitude versus axial position, constitutes a flux map.

The Incore Thermocouples are positioned to measure fuel assembly outlet temperature at pre-selected locations to provide an indication of radial power distribution and/or flow imbalances.

2.0 COMPONENT DESCRIPTION

2.1 Movable Incore Detector System

Objective # 2

Reference Figure 7.1, 7.2, 7.3. The Movable Incore Detector system consists of six fission chamber detectors, their associated instrumentation thimbles, instrumentation guide tubes (guide conduit), and drive systems. Transfer devices and interconnecting tubing allow the detectors to access the 58 instrumentation guide thimbles for various regions of the core.

2.1.1 Incore Fission Chamber Detectors

The six fission chamber detectors (A, B, C, D, E, and F) contain uranium oxide (U_3O_8) enriched to greater than 90% U-235. When a U-235 atom absorbs a neutron, the resulting excited nucleus fissions producing highly charged fission fragments and other products with cause ionization in the gas filled detector. The detector produces a current pulse for each ionization event as the ions are collected on the electrodes. The detectors are 0.188 inches in diameter and 2.1 inches in length.

1 Pt. Which one of the following is the major concern with Core Exit Thermocouples unavailable during a natural circulation cooldown?

A. **Inability to verify reactor coolant cooldown limitations**

B. **Inability to correct for RVLIS reference leg heat-up**

C. **Inability to predict the onset of voiding**

D. **Inability to detect the presence of non-condensable voids**

Bank Question: 1148 **Answer: C**

1 Pt. Which one of the following is the major concern with Core Exit Thermocouples unavailable during a natural circulation cooldown?

A. Inability to verify reactor coolant cooldown limitations

B. Inability to correct for RVLIS reference leg heat-up.

C. Inability to predict the onset of voiding

D. Inability to detect the presence of non-condensable voids

Distracter Analysis:.

A. **Incorrect**: T hot and T cold are used for cooldown limits.
Plausible: Cooldown limitations are based on NCS temperatures
B. **Incorrect**: Other parameters will verify natural circ. flow.
Plausible: Incore T/Cs are one of the five parameters used to verify natural circ. flow.
C. **Correct**:
D. **Incorrect** Steam voiding is the concern on loss of sub cooling.
Plausible: Voiding is a concern with natural circ. cooldown.

LEVEL: RO & SRO

KA: 017 K3.01 (3.5*/3.7*)

SOURCE: NEW

LEVEL OF KNOWLEDGE: Comprehension

AUTHOR: CWS

LESSON: OP-MC-EP-E0

OBJECTIVES: OP-MC-EP-E0 obj. 6

REFERENCES: OP-MC- EP-E0 page 161

017 In-Core Temperature Monitor System (ITM)

TASK: Operate the ITM
Monitor the ITM

K/A NO.	KNOWLEDGE	IMPORTANCE RO	IMPORTANCE SRO
K1	**Knowledge of the physical connections and/or cause-effect relationships between the ITM system and the following systems:** (CFR: 41.2 to 41.9 / 45.7 to 45.8)		
K1.01	Plant computer	3.2*	3.2*
K1.02	RCS	3.3	3.5
K2	**Knowledge of bus power supplies to the following:** (CFR: 41.5)		
K2.01	ITM system	2.0	2.2
K3	**Knowledge of the effect that a loss or malfunction of the ITM system will have on the following:** (CFR: 41.7 / 45.6)		
K3.01	Natural circulation indications	3.5*	3.7*
K4	**Knowledge of ITM system design feature(s) and/or interlock(s) which provide for the following:** (CFR: 41.7)		
K4.01	Input to subcooling monitors	3.4	3.7
K4.02	Sensing and determination of location core hot spots	3.1	3.6
K4.03	Range of temperature indication	3.1	3.3
K5	**Knowledge of the operational implications of the following concepts as they apply to the ITM system:** (CFR: 41.5 / 45.7)		
K5.01	Temperature at which cladding and fuel melt	3.1	3.9
K5.02	Saturation and subcooling of water	3.7	4.0
K5.03	Indication of superheating	3.7	4.1
K6	**Knowledge of the effect of a loss or malfunction of the following ITM system components:** (CFR: 41.7 / 45.7)		
K6.01	Sensors and detectors	2.7	3.0

CLASSROOM TIME (Hours)

NLO	NLOR	LPRO	LPSO	LOR
N/A	N/A	2.0	2.0	1.0

OBJECTIVES

SEQ	OBJECTIVE	NLO	NLOR	LPRO	LPSO	LOR
1	Describe the accidents that are diagnosed in E-0 and the diagnostic sequence. EPE0001			X	X	X
2	Explain the purpose for each procedure in the E-0 series. EPE0002			X	X	
3	Discuss the entry and exit guidance for each procedure in the E-0 series. EPE0003			X	X	
4	Discuss the symptoms of a reactor trip and/or safety injection. EPE0004			X	X	
5	Discuss the mitigating strategy (major actions) of each procedure in the E-0 series. EPE0005			X	X	X
6	Discuss the basis for any note, caution or step for each procedure in the E-0 series. EPE0006			X	X	X
7	Describe the immediate actions and include the RNO when appropriate. EPE0007			X	X	X
8	Describe the actions included on the E-0 Foldout page and the basis for these actions. EPE0008			X	X	X
9	Given the Foldout page, other than E-0, discuss the actions included and the basis for these actions. EPE0009			X	X	X

STEP 40 Continue cooldown of inactive portions of NC System:

PURPOSE: To ensure heat is being removed from the vessel head and S/G U-tubes so potential void formation during depressurization is minimized.

BASIS: The total core flow during ND system operation is approximately 2% of full flow. The ND system flow is even less than the natural circulation flow, and the upper head will, therefore, remain relatively stagnant compared to the rest of the NC (i.e., the ND system will force minimal cooling flow into the upper head). CRDM fans provide cooling to the upper head.

When the plant is being cooled by the ND system, injection is into the cold legs and the return line to the ND system is from the hot leg. Thus the S/Gs are not being cooled by the ND system. Steam dump should therefore be used to cool the S/Gs from 350°F to less than or equal to 212°F. The steam dumping from all S/Gs must be continued until they have stopped steaming. This will reduce the potential for steam bubble formation in the S/G U-tubes upon depressurization of the NC.

STEP 41 Determine if NC System depressurization to atmospheric pressure is permitted:

PURPOSE: To ensure the entire NC is below 200°F before final depressurization.

BASIS: As long as the entire NC is below 200°F, depressurization to atmospheric pressure will not cause any void formation in the system. Upper head T/Cs can give a good indication of upper head fluid temperature. A reactor vessel UR level greater than 100% and stable will imply at least saturated conditions.

Reactor vessel UR level less than 100%, following a NC depressurization at this time, would indicate the upper head fluid temperature is not below 200°F, and the NC should be repressurized to collapse the void.

The method for determining S/G U-tube temperature conditions consists of steaming the S/Gs until they stop steaming. This implies that no delta T exists and the primary/secondary temperatures are approximately equal.

ACTION/EXPECTED RESPONSE	RESPONSE NOT OBTAINED

41. **Determine if NC System depressurization to atmospheric pressure is permitted:**

a. Check the following:

__ • All T-Hots - LESS THAN 200°F

__ • All S/G pressures - AT 0 PSIG

__ • "REACTOR VESSEL UR LEVEL" - GREATER THAN OR EQUAL TO 100%.

b. Check Upper head T/Cs (read on OAC) - LESS THAN 200°F:

__ • M1A0142 (Core location G-08, T/C #13)

__ • M1A0155 (Core location F-01, T/C #43)

__ • M1A0166 (Core location J-06 T/C #17)

__ • M1A0251 (Core location M-07, T/C #59)

__ • M1A0268 (Core location A-10, T/C #2).

__ c. **GO TO** OP/1/A/6100/002 (Controlling Procedure For Unit Shutdown).

d. Contact station management to evaluate when further NC system depressurization is allowed, using the following information as required:

__ • With all CRDM fans off, it may take 88 hours for the upper head region to cool down to less than 200°F.

__ • If pressure is lowered slowly, while monitoring Upper Range RVLIS and Pzr level, void formation will be detected. This can determine saturation pressure and temperature of water in upper head.

__ a. **RETURN TO** Step 35.

b. Perform the following:

__ 1) **IF** OAC out of service, **THEN** have Reactor group determine temperatures from incore instrument panel.

__ 2) **IF** upper head T/Cs are unavailable, **THEN GO TO** Step 41.d.

__ 3) **IF** any upper head T/C greater than 200°F, **THEN RETURN TO** Step 35.

1 Pt. Given the following conditions on Unit 2:

- Unit 2 is in Mode 6
- Core unload is in progress
- VP is operating in 100% mode
- All GWR paperwork current

Due to an electrical short, the VP supply valves receive a Containment Ventilation Isolation signal (S_h). VP continues to operate. What concerns would this cause if Operator action is not taken?

A. Unmonitored release of containment atmosphere

B. Prevent ice condenser doors from opening if needed

C. ~~VP could not perform its safety related function~~
Excessive spent fuel pool level

D. Excessive external pressure on Containment

---

explain VACUUM ON containment! for 8

Bank Question: 1149 **Answer: D**

1 Pt. Given the following conditions on Unit 2:

- Unit 2 is in Mode 6
- Core unload is in progress
- VP is operating in 100% mode
- All GWR paperwork current

Due to an electrical short, the VP supply valves receive a Containment Ventilation Isolation signal (S_h). VP continues to operate. What concerns would this cause if Operator action is not taken?

A. Unmonitored release of containment atmosphere

B. Prevent ice condenser doors from opening if needed

C. VP could not perform its safety related function

D. Excessive vacuum in Containment

Distracter Analysis:.

A. **Incorrect**:
Plausible: if fuel handling were not in progress, equipment hatch could be open.

B. **Incorrect**:
Plausible: This configuration would open ice cond. Doors and Ice cond. Not required in Mode 6

C. **Incorrect**:
Plausible: VP performs no safety related function

D. **Correct**

LEVEL: RO & SRO

KA: 029 A1.03 (3.0*/3.3*)

SOURCE: NEW

LEVEL OF KNOWLEDGE: Comprehension

AUTHOR: CWS

LESSON: OP-MC-CNT-VP

OBJECTIVES: OP-MC-CNT-VP Obj. 2

REFERENCES: OP-MC-CNT-VP page 23

SYSTEM:	029 Containment Purge System (CPS)		
K5	**Knowledge of the operational implication of the following concepts as they apply to the Containment Purge System:** (CFR: 41.5 / 45.7)		
K5.01	Maximum concentration permissible	2.4	2.9*
K5.02	Dilution	2.3	2.8
K6	**Knowledge of the effect of a loss or malfunction on the following will have on the Containment Purge System:** (CFR: 41.7 / 45.7)		
K6.01	Valves	1.9	2.0
K6.02	Sensors and detectors	2.1*	2.3*
K6.03	Controllers and positioners	1.9	2.1
K6.04	Pumps	1.6	1.9
K6.05	Motors	1.6	1.9
K6.06	Heat exchangers and condensers	1.8	1.9
K6.07	Breakers, relays, and disconnects	1.8	1.9
	ABILITY		
A1	**Ability to predict and/or monitor changes in parameters to prevent exceeding design limits) associated with operating the Containment Purge System controls including:** (CFR: 41.5 / 45.5)		
A1.01	Supply air temperature	1.9	2.1
A1.02	Radiation levels	3.4	3.4
A1.03	Containment pressure, temperature, and humidity	3.0*	3.3*
A2	**Ability to (a) predict the impacts of the following malfunctions or operations on the Containment Purge System; and (b) based on those predictions, use procedures to correct, control, or mitigate the consequences of those malfunctions or operations:** (CFR: 41.5 / 43.5 / 45.3 / 45.13)		
A2.01	Maintenance or other activity taking place inside containment	2.9	3.6
A2.02	Continuance of outdoor temperature inversion	2.2	2.9
A2.03	Startup operations and the associated required valve lineups	2.7	3.1
A2.04	Health physics sampling of containment atmosphere	2.5*	3.2*
A3	**Ability to monitor automatic operation of the Containment Purge System including:** (CFR: 41.7 / 45.5)		
A3.01	CPS isolation	3.8	4.0

CLASSROOM TIME (Hours)

NLO	NLOR	LPRO	LPSO	LOR
1.5	1.5	1.5	1.5	1.0

OBJECTIVES

	OBJECTIVE	NLO	NLOR	LPRO	LPSO	LOR
1	State the purpose of the Containment Purge System. CNTVP001	X	X	X	X	
2	Describe the air flow path during a normal and refueling purging operation and explain the importance of supply and exhaust air flow balance during a purging operation. CNTVP002	X	X	X	X	
3	Explain what occurs automatically on a Phase "A" (S_t) or Containment Ventilation (S_h) isolation signal if a purging operation is in progress. CNTVP003	X	X	X	X	X
4	Describe the controls and indications, on Local Panel RB-CP-1, associated with the Containment Purge System. CNTVP004	X	X	X	X	
5	Describe the controls and indications, in the Control Room, associated with the Containment Purge System. CNTVP005		X	X	X	X
6	Given a Limit and/or Precaution associated with an operating procedure, discuss it's basis and applicability. CNTVP006		X	X	X	X

To start the Purge Supply and Exhaust Fans select 100% capacity (normal operation) or 50% capacity on Purge and Supply Mode Switch. If for some reason it is necessary to operate the purge system at 50% capacity select Train "A" or Train "B" position.

Objective #2 & 4

Place the Purge Mode Selector Switch, on local panel RB-CP-1, to the desired position "NORMAL" or "REFUEL". In the NORMAL position dampers RBPS-D-8 and 9 in the supply air lines position to provide a flow split of 2/1 ratio of supply air (Upper verses Lower Containment). Upper and lower supply flows are indicated on RB-CP-1. In the REFUEL position these dampers position to provide a flow split of 4/1. To operate the system in the Refuel mode, the missile shield must be removed (procedure requirement).

Operation of the supply and exhaust fans should be such that the total air flow rate entering the containment equals that exhausting containment to avoid placing the Containment vessel under a positive or negative pressure. Air flow rates into and out of containment are controlled by throttling a set of pneumatic dampers, one on the discharge and one on the recirculation line, for the supply (RBPS-D-5 and 6) and exhaust (RBPE-D-4 and 5). As one of the dampers throttles closed the other will open to maintain the desired flow rate.

For the supply air VPMPS-5 on RB-CP-1 controls dampers RBPS-D-5 and 6 in the supply duct system. When this control is rotated in the clockwise position the discharge damper, RBPS-D-6 closes. As D-6 closes, supply air flow rate to the Containment decreases and D-5 opens to maintain flowrate for the operating supply fan(s). An air monitor mounted in the supply duct to the Containment furnishes air flow rate (cfm) read-out on RB-CP-1 indicating the rate (cfm) air is being supplied to the Containment.

For the exhaust air VPMPS-6 on RB-CP-1 control dampers RBPE-D-4 and 5 in the exhaust duct system. When this control is rotated in the clockwise position the discharge damper, RBPE-D-4 closes. As D-4 closes, exhaust air flow rate from the Containment decreases and D-5 opens to maintain flowrate for the operating exhaust fan(s). An air monitor mounted in the exhaust duct from the Containment furnishes air flow rate (cfm) read-out on RB-CP-1 indicating the rate (cfm) air is being exhausted from the Containment.

At times during refueling with no core alterations or movement of irradiated fuel, when the equipment hatch is opened, the containment is kept at a slightly negative pressure to ensure no unfiltered release paths from containment exist.

To startup the Incore Instrument Purge System open the isolation valves on control board and depress the "START" pushbutton and monitor the flow meters to insure proper operation of the fans.

To operate the Auxiliary Carbon Filters depress the fans "ON" pushbutton and monitor the filter DP until Containment activity is reduced to acceptable levels.

1150

1 Pt. Given the following conditions on Unit 1:

- VF in Filter Mode
- Loaded Dry Cask movement in progress in Unit 1 SFP
- 0700 Control Room received Cabinet Trouble Annun. Due to loss of power to 1EMF-42 (Spent Fuel Pool Rad. Monitor)
- 0800 Control Room received OAC alarm indicating the 1B VF exhaust fan tripped.
- All other equipment in normal operations.

Which one of the following is the correct action based on the above information?

References Provided

A. **Dry Cask movement may continue since this is not movement of irradiated fuel assemblies.**

B. **Dry Cask movement should have been stopped at 0700 due to 1EMF-42 loss of power.**

C. **Dry Cask movement should have been stopped at 0800 due to the tripping of 1B VF exhaust fan.**

D. **Dry Cask movement may continue since 1A VF exhaust fan is a 100% capacity fan.**

☐

1150 **Bank Question:** **Answer:** **C**

1 Pt. Given the following conditions on Unit 1:

- VF in Filter Mode
- Loaded Dry Cask movement in progress in Unit 1 SFP
- 0700 Control Room received Cabinet Trouble Annun. Due to loss of power to 1EMF-42 (Spent Fuel Pool Rad. Monitor)
- 0800 Control Room received OAC alarm indicating the 1B VF exhaust fan tripped.
- All other equipment in normal operations.

Which one of the following is the correct action based on the above information?

References Provided

A. Dry Cask movement may continue since this is not movement of irradiated fuel assemblies.

B. Dry Cask movement should have been stopped at 0700 due to 1EMF-42 loss of power.

C. Dry Cask movement should have been stopped at 0800 due to the tripping of 1B VF exhaust fan.

D. Dry Cask movement may continue since 1A VF exhaust fan is a 100% capacity fan.

Distracter Analysis:.

A. **Incorrect**:
Plausible: If student does not realize that moving loaded dry cask had the same requirements as moving irradiated fuel.

B. **Incorrect**:
Plausible: If student does not realize that 1EMF-36 satisfies the T.S. requirements

C. **Correct**:

D. **Incorrect**
Plausible: If student believes that the exhaust fans are still considered 100% capacity.

LEVEL: RO & SRO

KA: 034 K6.02 (2.6/3.3)

SOURCE: NEW

Answer is NO effect due to Loss of Pool monitor system

LEVEL OF KNOWLEDGE: Comprehension

AUTHOR: CWS

LESSON: OP-MC-WE-EMF

OBJECTIVES: OP-MC- WE-EMF, Obj. 10

REFERENCES: Tech. Spec. 3.7.12, SLC 16.7.6, and 16.11.7

SYSTEM:	**034 Fuel Handling Equipment System (FHES)**		
K5	**Knowledge of the operational implication of the following concepts as they apply to the Fuel Handling System:** (CFR: 41.5 / 45.7)		
K5.01	General principles of mechanical lifting	1.7?	2.1?
K5.02	Limiting of load	2.0	2.6
K5.03	Residual heat removal; decay	2.2	2.7
K6	**Knowledge of the effect of a loss or malfunction on the following will have on the Fuel Handling System :** (CFR: 41.7 / 45.7)		
K6.01	Fuel handling equipment	2.1	3.0
K6.02	Radiation monitoring systems	2.6	3.3
	ABILITY		
A1	**Ability to predict and/or monitor changes in parameters (to prevent exceeding design limits) associated with operating the Fuel Handling System controls including:** (CFR: 41.5 / 45.5)		
A1.01	Load limits	2.4	3.2
A1.02	Water level in the refueling canal	2.9	3.7
A2	**Ability to (a) predict the impacts of the following malfunctions or operations on the Fuel Handling System ; and (b) based on those predictions, use procedures to correct, control, or mitigate the consequences of those malfunctions or operations:** (CFR: 41.5 / 43.5 / 45.3 / 45.13)		
A2.01	Dropped fuel element	3.6	4.4
A2.02	Dropped cask	3.4	3.9
A2.03	Mispositioned fuel element	3.3	4.0
A3	**Ability to monitor automatic operation of the Fuel Handling System, including:** (CFR: 41.7 / 45.5)		
A3.01	Travel limits	2.5*	3.1
A3.02	Load limits	2.5*	3.1
A3.03	High flux at shutdown	2.9	3.3
A4	**Ability to manually operate and/or monitor in the control room:** (CFR: 41.7 / 45.5 to 45.8)		
A4.01	Radiation levels	3.3	3.7
A4.02	Neutron levels	3.5	3.9

SEQ	OBJECTIVE	NLO	NLOR	LPRO	LPSO	LOR
10	Concerning the Technical Specifications / SLCs related to the EMFs: • Given the LCO or SLC title, state the LCO / commitment (including any COLR values) and applicability. • For any LCOs / SLCs that have action required within one hour, state the action. • Given a set of parameter values or system conditions, determine if any Tech Spec LCOs or SLCs is(are) not met and any action(s) required within one hour. • Given a set of parameter values or system conditions and the appropriate Tech Spec / SLC, determine required action(s). • Discuss the bases for a given Tech. Spec. LCO or SLC. *** SRO ONLY** WEEMF010			X X X X	X X X X	X X X *

4.0 TECH SPECS / SELECTED LICENSEE COMMITMENTS

Objective # 10

4.1	SLC	16.7.6	**Radiation Monitoring for Plant Operations.**
4.2	SLC	16.11.2	**Radioactive Liquid Effluent Monitoring Instrumentation.**
4.3	SLC	16.11.7	**Radioactive Gaseous Effluent Monitoring Instrumentation.**
4.4	TS	3.3.3	**Post Accident Monitoring (PAM) Instrumentation**
4.5	TS	3.4.15	**RCS Leakage Detection Instrumentation**

5.0 INDUSTRY EVENTS

5.1 PIP 1-M96-2953

At 0815 on 10-17-96 Unit 1 received an alarm on the "1EMF 35,36,37 Loss of Unit Vent Sample Flow" (1RAD2 D-5). RP was notified and the blower was restarted. At 0834 the same alarm was received a second time. In agreement with RP the EMF 36(L) was declared inoperable and a work request was written. IAE was dispatched to investigate the cause of the alarms. Around 1000 the SPOC IAE crew proceeded to trouble shoot the problem associated with the package and notified the Control Room SRO and RO. When they proceeded to work they requested the RO to start the sample blower associated with the EMF35, 36, 37 package. As this happened the alarm associated with the EMF package cleared however the Unit Vent Composite Sampler Low Flow (1RAD2 D-3) came in and would not clear.

Note: It was determined later that the reason the Unit Vent Composite Sampler Low Flow alarm came in was due to a degraded sample blower. When the sample blower associated with the EMF 35,36,37 package was started it robbed flow from the sample blower from the Unit Vent Composite Sampler, thus causing it's flow to decrease into the alarm range (the Composite Sampler and the EMF package share a common suction path) **(refer to Drawing 7.13).** The alarm for the Unit Vent Composite Sampler did not clear due to the degraded sample blower would not develop the adequate flow rate needed to reset the alarm, however the flow rate was still sufficient to maintain the composite sampler operable.

3.7 PLANT SYSTEMS

3.7.12 Fuel Handling Ventilation Exhaust System (FHVES)

LCO 3.7.12 The FHVES shall be OPERABLE and in operation.

APPLICABILITY: During movement of irradiated fuel assemblies in the fuel building.

ACTIONS

CONDITION	REQUIRED ACTION	COMPLETION TIME
A. FHVES inoperable.	----------NOTE---------- LCO 3.0.3 is not applicable. ---------- A.1 Suspend movement of irradiated fuel assemblies in the fuel building.	Immediately

SURVEILLANCE REQUIREMENTS

SURVEILLANCE	FREQUENCY
SR 3.7.12.1 Verify FHVES in operation.	12 hours
SR 3.7.12.2 Operate FHVES for ≥ 15 minutes.	Prior to movement of irradiated fuel assemblies

(continued)

SURVEILLANCE REQUIREMENTS (continued)

SURVEILLANCE		FREQUENCY
SR 3.7.12.3	Perform required FHVES filter testing in accordance with the Ventilation Filter Testing Program (VFTP).	In accordance with the VFTP
SR 3.7.12.4	Verify FHVES can maintain an exhaust flow rate > 8000 cfm greater than the supply flow rate.	18 months
SR 3.7.12.5	Verify each FHVES filter bypass damper can be closed.	18 months

16.7 INSTRUMENTATION

16.7.6 Radiation Monitoring for Plant Operations

COMMITMENT The radiation monitoring instrumentation channels shown in Table 16.7.6-1 shall be OPERABLE.

APPLICABILITY As shown in Table 16.7.6-1.

REMEDIAL ACTIONS

CONDITION		REQUIRED ACTION		COMPLETION TIME
A.	One or more radiation monitoring channels Alarm/Trip setpoint exceeding value shown in Table 16.7.6-1.	A.1	Adjust setpoint to within the limit.	4 hours
		OR		
		A.2	Declare the channel inoperable.	4 hours
B.	One Containment Atmosphere Gaseous Radioactivity monitoring channel inoperable.	B.1	Verify containment purge system (VP) valves are maintained closed.	Immediately
C.	One Control Room Air Intake Radioactivity monitoring channel inoperable	C.1	Isolate the associated Control Room Ventilation System (VC) outside air intake	1 hour

(continued)

REMEDIAL ACTIONS (continued)

CONDITION	REQUIRED ACTION	COMPLETION TIME
D. One Criticality Radiation Level channel inoperable.	D.1 Provide a portable continuous monitor with same Alarm Setpoint in the fuel pool area.	Immediately
	AND	
	D.2.1 Restore inoperable monitors to OPERABLE status.	30 days
	OR	
	D.2.2 Suspend all fuel movement operations in the fuel building.	30 days
E. One Spent Fuel Pool Radioactivity monitoring channel inoperable.	E.1 Verify the Fuel Handling Ventilation System (VF) requirements in Technical Specification 3.7.12 are met.	Immediately

TESTING REQUIREMENTS

----------NOTE----------

Refer to Table 16.7.6-1 to determine which TRs apply for each Radiation Monitoring channel.

TEST	FREQUENCY
TR 16.7.6.1 Perform CHANNEL CHECK.	12 hours
TR 16.7.6.2 Perform CHANNEL OPERATIONAL TEST.	92 days
TR 16.7.6.3 Perform a CHANNEL CALIBRATION.	18 months.

TABLE 16 7.6-1

RADIATION MONITORING INSTRUMENTATION FOR PLANT OPERATION

	MONITOR	APPLICABLE MODES	REQUIRED CHANNELS	ALARM/TRIP SETPOINT	TESTING REQUIREMENTS
1.	Containment Atmosphere Gaseous Radioactivity-High (Low Range EMF-39)	1,2,3,4	1	Must meet SLC 16.11-6 limits	TR 16.7.6.1 TR 16.7.6.2 TR 16.7.6.3
2.	Spent Fuel Pool Radioactivity-High (EMF-42)	With irradiated fuel in fuel storage areas or fuel building	1	$\leq$ 1.7 x 10-4 µCi/ml	TR 16.7.6.1 TR 16.7.6.2 TR 16.7.6.3
3.	Criticality Radiation Level (1EMF-17, 2EMF-4)	With fuel in fuel storage areas or fuel building	1	$\leq$ 15 mR/hr	TR 16.7.6.1 TR 16.7.6.2 TR 16.7.6.3
4.	Control Room Air Intake Radioactivity-High (EMF-43a and 43b)	1,2,3,4,5,6	2 per station.	$\leq$ 3.4 x 10-4 µCi/ml	TR 16.7.6.1 TR 16.7.6.2 TR 16.7.6.3

BASES

The OPERABILITY of the radiation monitoring instrumentation for plant operations ensures that: (1) the associated action will be initiated when the radiation level monitored by each channel or combination thereof reaches its setpoint, (2) the specified coincidence logic is maintained, and (3) sufficient redundancy is maintained to permit a channel to be out-of-service for testing or maintenance. The radiation monitors for plant operations senses radiation levels in selected plant systems and locations and determines whether or not predetermined limits are being exceeded. If they are, the signals are combined into logic matrices sensitive to combinations indicative of various accidents and abnormal conditions. Once the required logic combination is completed, the system sends actuation signals to initiate alarms or automatic isolation action and actuation of Emergency Exhaust or Ventilation Systems.

REFERENCES

None.

16.11 RADIOLOGICAL EFFLUENT CONTROLS

16.11.7 Radioactive Gaseous Effluent Monitoring Instrumentation

COMMITMENT

The radioactive gaseous effluent monitoring instrumentation channels shown in Table 16.11.7-1 shall be OPERABLE with Alarm/Trip Setpoints set to ensure that the limits of SLC 16.11.6 are not exceeded.

AND

The Alarm/Trip setpoints shall be determined and adjusted in accordance with the methodology and parameters in the ODCM.

----------NOTE----------
Brief periods of routine sampling (not to exceed 15 minutes) do not make the instrumentation inoperable.

APPLICABILITY

As shown in Table 16.11.7-1.

REMEDIAL ACTIONS

----------NOTE----------
Separate Condition entry is allowed for each Function.

CONDITION	REQUIRED ACTION	COMPLETION TIME
A. One or more radioactive gaseous effluent monitoring channels Alarm/Trip setpoint less conservative than required.	A.1 Suspend the release of radioactive gaseous effluents monitored by the affected channel. OR A.2 Declare the channel inoperable. OR A.3 Adjust setpoint to within limit.	Immediately Immediately Immediately

(continued)

REMEDIAL ACTIONS (continued)

CONDITION	REQUIRED ACTION	COMPLETION TIME
B. One or more radioactive gaseous effluent monitoring instrument channels inoperable.	B.1 Enter the Remedial Action specified in Table 16.11.7-1 for the channel(s).	Immediately
C. One channel inoperable.	C.1.1 Analyze two independent samples of the tank contents. AND	Prior to initiating a release
	C.1.2 Perform independent verification of the discharge valve lineup. AND	Prior to initiating a release
	C.1.3.1 Perform independent verification of manual portion of the computer input for the release rate calculations performed by computer. OR	Prior to initiating a release
	C.1.3.2 Perform independent verification of entire release rate calculations for calculations performed manually. AND	Prior to initiating a release
	C.1.4 Restore channel to OPERABLE status. OR	14 days
	C.2 Suspend the release of radioactive effluents via this pathway.	Immediately

(continued)

REMEDIAL ACTIONS (continued)

CONDITION	REQUIRED ACTION	COMPLETION TIME
D. One or more flow rate measurement channels inoperable.	D.1 Estimate the flow rate of the release. AND D.2 Restore the channel to OPERABLE status.	Once per 4 hours during releases 30 days
E. One or more noble gas activity monitor channels inoperable.	E.1 Obtain grab samples from the effluent pathway. AND E.2 Perform an analysis of grab samples for radioactivity. AND E.3 Restore the channel to OPERABLE status.	Once per 12 hours during releases To meet LLD requirements per Table 16.11.6-1 30 days
F. Noble gas activity monitor providing automatic termination of release inoperable.	F.1 Suspend PURGING or VENTING of radioactive effluents via this pathway.	Immediately
G. One or more sampler channels inoperable.	G.1 Perform sampling with auxiliary sampling equipment as required by Table 16.11.6-1. AND G.2 Restore the channel to OPERABLE status.	Continuously 30 days

(continued)

REMEDIAL ACTIONS (continued)

CONDITION	REQUIRED ACTION	COMPLETION TIME
H. One or more Sampler Minimum Flow Device Channels inoperable.	H.1 Verify flow through the sampling apparatus. AND H.2 Restore the channel to OPERABLE status.	Once per 4 hours during releases 30 days
I. Required Action and associated Completion Time of Condition C, D, E, F, G, or H not met.	I.1 Explain why the inoperability was not corrected within the specified Completion Time in the Annual Radioactive Effluent Release Report.	In the next scheduled Annual Radioactive Effluent Release Report

TESTING REQUIREMENTS

----------NOTE----------
Refer to Table 16.11.7-1 to determine which TRs apply for each Radioactive Gaseous Effluent Monitoring channel.

TEST	FREQUENCY
TR 16.11.7.1 Perform CHANNEL CHECK.	Prior to each release
TR 16.11.7.2 ----------NOTE---------- The SOURCE CHECK for these channels shall be the qualitative assessment of channel response when the channel sensor is exposed to a source of increased radioactivity or a simulated source of radioactivity such as a light emitting diode. --- Perform SOURCE CHECK.	Prior to each release
TR 16.11.7.3 Perform CHANNEL CHECK.	24 hours
TR 16.11.7.4 Perform CHANNEL CHECK.	7 days

(continued)

TESTING REQUIREMENTS (continued)

	TEST	FREQUENCY
TR 16.11.7.5	----------NOTE---------- The SOURCE CHECK for these channels shall be the qualitative assessment of channel response when the channel sensor is exposed to a source of increased radioactivity or a simulated source of radioactivity such as a light emitting diode. ---------- Perform SOURCE CHECK.	31 days
TR 16.11.7.6	----------NOTES---------- 1. For noble gas activity monitors providing automatic termination of release, the COT shall also demonstrate that automatic isolation of the pathway occurs if the instrument indicates measured levels above the Alarm/Trip Setpoint. 2. For all noble gas activity monitors, the COT shall also demonstrate that control room alarm annunciation occurs if the instrument indicates measured levels above the Alarm/Trip Setpoint; circuit failure and, a downscale failure. ---------- Perform CHANNEL OPERATIONAL TEST.	92 days
TR 16.11.7.7	----------NOTE---------- For all noble gas activity monitors, the initial CHANNEL CALIBRATION shall be performed using standards certified by the National Institute of Standards and Technology (NIST) or using standards obtained from suppliers that participate in measurement assurance activities with NIST. These standards shall permit calibrating the system over its intended range of energy and measurement range. For subsequent CHANNEL CALIBRATION, sources that have been related to the initial calibration shall be used. ---------- Perform a CHANNEL CALIBRATION.	18 months

TABLE 16.11.7-1
(Page 1 of 3)

RADIOACTIVE GASEOUS EFFLUENT MONITORING INSTRUMENTATION

INSTRUMENTS	MINIMUM CHANNELS OPERABLE	REMEDIAL ACTION	APPLICABILITY	TESTING REQUIREMENTS
1. WASTE GAS HOLDUP SYSTEM				
a. Noble Gas Activity Monitor - Providing Alarm and Automatic Termination of Release (Low Range-EMF-50 or 1EMF-36, low-range)	1 per station	A, C, I	During gas effluent releases.	TR 16.11.7.1 TR 16.11.7.2 TR 16.11.7.6 TR 16.11.7.7
b. Effluent System Flow Rate Measuring Device	1 per station	D, I	At all times except when isolation valve is closed & locked.	TR 16.11.7.3 TR 16.11.7.6 TR 16.11.7.7
2. Condenser Evacuation System - Noble Gas Activity Monitor (EMF-33)	1	A, E, I	When air ejectors are operable.	TR 16.11.7.3 TR 16.11.7.5 TR 16.11.7.6 TR 16.11.7.7
3. Vent System				
a. Noble Gas Activity Monitor (Low Range - EMF-36)	1	A, E, I	At all times.	TR 16.11.7.3 TR 16.11.7.5 TR 16.11.7.6 TR 16.11.7.7
b. Iodine Sampler	1	G, I	At all times, except during routine sampling.	TR 16.11.7.4
c. Particulate Sampler (EMF-35)	1	G, I	At all times, except during routine sampling.	TR 16.11.7.4
d. Unit Vent Flow Rate Monitor (Totalizer)	1	D, I	At all times.	TR 16.11.7.3 TR 16.11.7.6 TR 16.11.7.7
e. Iodine Sampler Minimum Flow Device	1	H,I	At all times, except during routine sampling.	TR 16.11.7.3 TR 16.11.7.6 TR 16.11.7.7
f. Particulate Sampler Minimum Flow Device	1	G,I	At all times, except during routine sampling.	TR 16.11.7.3 TR 16.11.7.6 TR 16.11.7.7
4. Containment Purge System - Noble Gas Activity Monitor - Providing Alarm and Automatic Termination of Release (Low Range - EMF-39)	1	A, F, I	Modes 1 through 6, except when isolation valve is closed & locked.	TR 16.11.7.2 TR 16.11.7.3 TR 16.11.7.6 TR 16.11.7.7

(continued)

TABLE 16.11.7-1
(Page 2 of 3)

RADIOACTIVE GASEOUS EFFLUENT MONITORING INSTRUMENTATION

INSTRUMENTS	MINIMUM CHANNELS OPERABLE	REMEDIAL ACTION	APPLICABILITY	TESTING REQUIREMENTS
5. Auxiliary Building Ventilation System - Noble Gas Activity Monitor (EMF-41 or EMF-36)	1	A, E, I	At all times.	TR 16.11.7.3 TR 16.11.7.5 TR 16.11.7.6 TR 16.11.7.7
6. Fuel Storage Area Ventilation System - Noble Gas Activity Monitor (EMF-42 or EMF-36)	1	A, E, I	At all times.	TR 16.11.7.3 TR 16.11.7.5 TR 16.11.7.6 TR 16.11.7.7
7. Contaminated Parts Warehouse Ventilation System				
a. Noble Gas Activity Monitor (EMF-53)	1 per station	A, E, I	During gaseous effluent releases.	TR 16.11.7.3 TR 16.11.7.5 TR 16.11.7.6 TR 16.11.7.7
b. Flow Rate Monitor	1 per station	D, I	During gaseous effluent releases.	TR 16.11.7.3 TR 16.11.7.6 TR 16.11.7.7
c. EMF-53 Sampler Minimum Flow Device	1 per station	H,I	During gaseous effluent releases.	TR 16.11.7.3 TR 16.11.7.6 TR 16.11.7.7
8. Radwaste Facility Ventilation System				
a. Noble Gas Activity Monitor (EMF-52)	1 per station	A, E, I	During gaseous effluent releases.	TR 16.11.7.3 TR 16.11.7.5 TR 16.11.7.6 TR 16.11.7.7
b. Flow Rate Monitor	1 per station	D, I	During gaseous effluent releases.	TR 16.11.7.3 TR 16.11.7.6 TR 16.11.7.7
c. EMF-52 Sampler Minimum Flow Device	1 per station	H, I	During gaseous effluent releases.	TR 16.11.7.3 TR 16.11.7.6 TR 16.11.7.7

(continued)

TABLE 16.11.7-1
(Page 3 of 3)

RADIOACTIVE GASEOUS EFFLUENT MONITORING INSTRUMENTATION

INSTRUMENTS	MINIMUM CHANNELS OPERABLE	REMEDIAL ACTION	APPLICABILITY	TESTING REQUIREMENTS
9. Equipment Staging Building Ventilation System				
a. Noble Gas Activity Monitor (EMF-59)	1 per station	A, E, I	During gaseous effluent releases.	TR 16.11.7.3 TR 16.11.7.5 TR 16.11.7.6 TR 16.11.7.7
b. Flow Rate Monitor	1 per station	D, I	During gaseous effluent releases.	TR 16.11.7.3 TR 16.11.7.6 TR 16.11.7.7
c. EMF-59 Sampler Minimum Flow Device	1 per station	H, I	During gaseous effluent releases.	TR 16.11.7.3 TR 16.11.7.6 TR 16.11.7.7
10. Containment Air Release and Addition System - Noble Gas Activity Monitor (EMF-39L or EMF-36L)	1	A, E, I	At all times except when isolation valve is closed & locked.	TR 16.11.7.3 TR 16.11.7.5 TR 16.11.7.6 TR 16.11.7.7

BASES

The radioactive gaseous effluent instrumentation is provided to monitor and control, as applicable, the releases of radioactive materials in gaseous effluents during actual or potential releases of gaseous effluents. During routine sampling, instrumentation may be turned off for short periods of time (not to exceed 15 minutes) in order to meet analysis requirements of SLC Manual 16.11.6. This is considered to be a normal operable function of the equipment. The Alarm/Trip Setpoints for these instruments shall be calculated and adjusted in accordance with the methodology and parameters in the ODCM to ensure that the Alarm/Trip will occur prior to exceeding the limits stated in SLC 16.11.6. The OPERABILITY and use of this instrumentation is consistent with the requirements of General Design Criteria 60, 63, and 64 of Appendix A to 10 CFR Part 50.

REFERENCES

1. McGuire Nuclear Station, Offsite Dose Calculation Manual

2. 10 CFR Part 50, Appendix A

1 Pt. Given the following conditions on Unit 1:

- Power reduction from 100% to 88% performed from 2200 to 2300 in preparation for Turbine Valve Movement Testing (TMVT).
- At 2330 the TVMT is in progress

Which one of the following is the expected initial plant response (2300 to 2400) and the correct Operator actions to compensate for the ~~changing~~ plant conditions?

A. **Xe ↑, T-ave ↓, Dilute**

B. **Xe ↓, T-ave ↓, Dilute**

C. **Xe ↑, T-ave ↑, Borate**

D. **Xe↓, T-ave ↑, Borate**

Rods in Auto?

Bank Question: 1151 **Answer: A**

1 Pt. Given the following conditions on Unit 1:

- Power reduction from 100% to 88% performed from 2200 to 2300 in preparation for Turbine Valve Movement Testing (TMVT).
- At 2330 the TVMT is in progress

Which one of the following is the expected initial plant response (2300 to 2400) and the correct Operator actions to compensate for the changing plant conditions?

A. Xe ↑, T-ave ↓, Dilute

B. Xe ↓, T-ave ↓, Dilute

C. Xe ↑, T-ave ↑, Borate

D. Xe↓, T-ave ↑, Borate

Distracter Analysis:. NC pressure is essentially unchanged during the TVMT. Temperature will change.

A. Correct:
B. Incorrect:
Plausible:
C. Incorrect:
Plausible:
D. Incorrect
Plausible:

LEVEL: RO & SRO

KA: 045 A4.08 (2.7*/2.6*)

SOURCE: NEW

LEVEL OF KNOWLEDGE: Comprehension

AUTHOR: CWS

LESSON:

OBJECTIVES:

REFERENCES:

SYSTEM	045 Main Turbine Generator (MT/G) System		
A3	**Ability to monitor automatic operation of the MT/G system, including:** (CFR: 41/7 / 45.5)		
A3.01	Recognition of trends on main T/G output meter	2.1*	1.9
A3.02	Interpretation of T/G output breaker indicating lights	2.2*	2.1
A3.03	Interpretation of T/G voltage regulation indication	1.9	1.9
A3.04	T/G trip	3.4	3.6
A3.05	Electrohydraulic control	2.6	2.9
A3.06	Turbine supervisory instrumentation	2.1	2.2
A3.07	Turbine stop/governor valve closure on turbine trip	3.5	3.6
A3.08	Determination from throttle and governor indicators of turbine trip: several indications, including CRDS trip alarm	3 3*	3.5*
A3.09	Comparison of incoming and running voltmeters	1.9	2.0
A3.10	Voltage regulator	1.9	2.0
A3.11	Generator trip	2.6*	2.9*
A4.	**Ability to manually operate and/or monitor in the control room:** (CFR: 41.7 / 45.5 to 45.8)		
A4.01	Turbine valve indicators (throttle, governor, control, stop, intercept), alarms, and annunciators	3.1	2.9
A4.02	T/G controls, including breakers	2.7	2.6*
A4.03	T/G speed indication for on-line and off-line operation	1.9	1.9
A4.04	Exhaust hood spray system for temperature control	1.9	1.6
A4 05	Electrical (T/G) and steam system adjustments	2.2	1.9
A4 06	Turbine stop valves	2.8	2.7*
A4.07	Voltage regulator	1.9	1.9
A4.08	RCS parameters (temperature and pressure), while conducting valve freedom test	2.7*	2.6*
A4.09	Turbine supervisory instruments during startup	1.8	1.9
A4.10	Startup T/G on load limits	1.9*	2.2
A4.11	T/G output breaker controls; understanding of indications and alarms	2.4*	2.3*
A4.12	Interpretation of electrohydraulic control indications	2.2	2.4*
A4.13	Governor and load limits	2.1	2.2

1 Pt(s)

EMF 59 (Equipment Staging Building Ventilation Monitor) is in 'Trip 2'.

Which one of the following describes the actions that occur as a result of the Trip 2 alarm?

A. **If VK *(Equipment Staging Building Vent.)* is in "Auto" the supply fans will trip**

B. **If VK is in "On" the supply fans will trip**

C. **If VK is in "Auto" the exhaust and supply fans will trip**

D. **If VK is in "On" the exhaust and supply fans will trip**

Bank Question: 1152 **Answer: C**

1 Pt(s) EMF 59 (Equipment Staging Building Ventilation Monitor) is in 'Trip 2'.

Which one of the following describes the actions that occur as a result of the Trip 2 alarm?

A. If VK *(Equipment Staging Building Vent.)* is in "Auto" the supply fans will trip.

B. If VK is in "On" the supply fans will trip

C. If VK is in "Auto" the exhaust and supply fans will trip.

D. If VK is in "On" the exhaust and supply fans will trip.

Distracter Analysis:

A. **Incorrect**: The exhaust and supply fans trip..
Plausible:

B. **Incorrect**: No effect on system.
Plausible:.

C. **Correct**:

D. **Incorrect**: No effect on system in ON position.
Plausible:

Level: RO&SRO

KA: SYS 072 K1.01 (3.6/3.6)

Source: McGuire Bank, NRC Exam Retake 2003

Level of knowledge: memory

AUTHOR: CWS

Lesson: OP-MC-WE-EMF

Lesson Plan Objective: OP-MC-WE-EMF, Obj. 3

References: OP-MC-WE-EMF, p. 41

072 Area Radiation Monitoring (ARM) System

TASK: Perform lineups of the ARM system
Perform the ARM instrumentation functional test
Operate ARM monitors
Monitor ARM operation
Perform the ARM equipment check

K/A NO.	KNOWLEDGE	IMPORTANCE RO	IMPORTANCE SRO
K1	**Knowledge of the physical connections and/or cause-effect relationships between the ARM system and the following systems:** (CFR: 41.2 to 41.9 / 45.7 to 45.8)		
K1.01	Plant ventilation systems	3.1*	3.5*
K1.02	Containment isolation	3.5	3.9
K1.03	Fuel building isolation	3.6*	3.7*
K1.04	Control room ventilation	3.3*	3.5*
K1.05	MRSS	2.8*	2.9*
K2	**Knowledge of bus power supplies to the following:** (CFR: 41.7)		
K2.01	Radiation monitoring systems	2.3*	2.5
K3	**Knowledge of the effect that a loss or malfunction of the ARM system will have on the following:** (CFR: 41.7 / 45.6)		
K3.01	Containment ventilation isolation	3.2*	3.4*
K3.02	Fuel handling operations	3.1	3.5
K4	**Knowledge of ARM system design feature(s) and/or interlock(s) which provide for the following:** (CFR: 41.7)		
K4.01	Containment ventilation isolation	3.3*	3.6*
K4.02	Fuel building isolation	3.2*	3.4*
K4.03	Plant ventilation systems	3.2*	3.6*
K5	**Knowledge of the operational implications of the following concepts as they apply to the ARM system:** (CFR: 41.5 / 45.7)		
K5.01	Radiation theory, including sources, types, units, and effects	2.7	3.0
K5.02	Radiation intensity changes with source distance	2.5	3.2

SEQ	OBJECTIVE	NLO	NLOR	LPRO	LPSO	LOR
	• EMF 49(L) Liquid Waste Discharge • EMF 50(L) Waste Gas Discharge • EMF 52 Interim Radwaste Facility Vent. • EMF 53 Contaminated Materials Warehouse Vent. • EMF 54A/B TSC Vent. • EMF 59 Equipment Staging Building Vent. • 1(2) EMF 36(HH) Unit 1(2) Unit Vent Activity Monitor • 2 EMF3 Unit #2 containment Refueling Bridge • 1EMF 16 Unit #1 containment Refueling Bridge WEEMF003					
4	Describe the sampling capabilities of EMF-38, 39, 40. WEEMF004		X	X	X	X
5	Describe the sampling process of EMF-41. WEEMF005		X	X	X	X
6	Describe the type of detector used in each EMF. WEEMF006		X	X	X	
7	Describe the basic flowpath and operation of a Particulate, Iodine, and Gas Detector Assembly. WEEMF007		X	X	X	
8	Describe the operation of the Fixed Filter Assemblies for Unit Vent and Containment Atmosphere EMF's. WEEMF008		X	X	X	X
9	Describe the indications and controls on the following readout modules • RP-2A • RP-2C • RP-86A WEEMF009		X	X	X	X

Objective # 2, 3

A Trip 2 high radiation alarm on EMF 54A will close damper OVH3 to isolate Location 1 (U-1) intake. A Trip 2 high radiation alarm on EMF 54B will close damper OVH4 to isolate Location 2 (U-2) intake.

The purpose of the auto actions are to prevent high airborne activity from entering TSC via TSC ventilation system.

EMF 54A and 54B are single range beta gas channels with plastic scintillation detectors. The instrument range is 10 to 10^7 CPM. All indication is in the TSC, none exists in the Control Room.

2.1.20 Equipment Staging Building Ventilation System (VK)

Objective #2

The Equipment Staging Building could contain radioactive materials which if released to the environment could violate the 10CFR release limits. This facility is not designed to perform controlled radioactive releases however, there is the possibility that the ventilation system could become a vent path to the environment. EMF-59 - Equipment Staging Building Ventilation Monitor is use to monitor gaseous activity exhausted to the atmosphere.

Objective #3

If the Equipment Staging Bldg. Vent (VK) is in "Auto" it will trip the supply fan and exhaust fan with a Trip 2 high radiation alarm. If the VK System is in "On", no automatic actions will occur with a Trip 2 alarm.

The purpose of the auto actions are to prevent exceeding release rate limit via this pathway.

EMF-59 is a single range Beta gas channel with a plastic scintillation detector. The instrument range is 10 to 10^7 CPM.

2.1.21 Unit Vent Activity Monitor

Objective #2

1(2) EMF 36 (HH) - Unit 1(2) Unit Vent Activity Monitor is used for the assessment of the level of radioactivity being released to the atmosphere through the Unit Vent during an accident or post-accident condition.

Objective #3

A high radiation alarm (Trip I) on 1 EMF 36 (HH) will shut off the 1 EMF 35/36/37 sample pump. A high alarm on 2 EMF 36 (HH) will shut off the 2 EMF 35/36/37 sample pump.

Note that the automatic action occurs on Trip I instead of Trip II.

EMF 36(HH) uses an Ionization chamber detector. The instrument range is 1 to 10^8 R/hr.

1 Pt.

Unit 1 has experienced a loss of 1EVDD Panel board resulting in the loss of the following:

- "B" Train Sequencer control Power
- 1ETB Breaker Control Power

Which one of the following is a complete list of the '1B' RN pump start capability(s) based on the above failure?

A. Local breaker operation

B. Local breaker operation, manually from the main control board

C. Local breaker operation, manually from the main control board, CA auto start

D. Local breaker operation, manually from the main control board, CA auto start, auxiliary shutdown panel

---

Bank Question: 1153 **Answer: A**

1 Pt. Unit 1 has experienced a loss of 1EVDD Panel board resulting in the loss of the following:

- "B" Train Sequencer control Power
- 1ETB Breaker Control Power

Which one of the following is a complete list of the '1B' RN pump start capability(s) based on the above failure?

A. **Local breaker operation only**

B. **Local breaker operation, manually from the main control board only**

C. **Local breaker operation, manually from the main control board, CA auto start only**

D. **Local breaker operation, manually from the main control board, CA auto start, auxiliary shutdown panel**

Distracter Analysis:.

A. **Correct:**
B. **Incorrect:**
Plausible:
C. **Incorrect:**
Plausible:
D. **Incorrect**
Plausible:

LEVEL: RO & SRO

KA: 075 K2.03 (2.6*/2.7*)

SOURCE: NEW

LEVEL OF KNOWLEDGE: Comprehension

AUTHOR: CWS

LESSON: OP-MC-AP-AP15

OBJECTIVES: OP-MC-AP-AP15, obj 3

REFERENCES: AP/15 Enclosure 9 page 102

075 Circulating Water System

TASK:
Perform circulating water/service water systems test
Remove marine growth from main condenser circulating water passages
Perform lineups of the circulating water system
Start up the circulating water system
Monitor circulating water system operations
Shut down the circulating water system
Operate the water box priming subsystem
Monitor water box priming subsystem operation
Monitor condenser cleaning subsystem operation
Start up and shut down the de-icing subsystem
Operate circulating water pumps in different combinations
Isolate a water box (salt water operations)
Restore flow to a water box
Operate the vacuum priming system on the circulating water system vacuum loop
Operate the cooling towers
Isolate a water box (fresh water)
Operate the cooling tower blowdown subsystem
Operate cooling tower makeup subsystem

K/A NO.	KNOWLEDGE	IMPORTANCE RO	IMPORTANCE SRO
K1	**Knowledge of the physical connections and/or cause-effect relationships between the circulating water system and the following systems:** (CFR: 41.2 to 41.9 / 45.7 to 45.8)		
K1.01	SWS	2.5	2.5
K1.02	Liquid radwaste discharge	2.9	3.1
K1.03	Condenser	1.9	1.9
K1.04	S/GB	1.7	1.8
K1.05	MRSS and SDS	2.0	1.9
K1.06	Cooling towers	1.9*	1.7*
K1.07	Recirculation spray system	2.2*	2.1*
K1.08	Emergency/essential SWS	3.2*	3.2*
K1.09	Vacuum priming	1.5	1.4
[redacted]	(CFR: 41.7)		
K2.01	Circulating water pumps	1.6	1.7
K2.02	MOVs	1.7	1.7
[redacted]			
K2.04	Lube oil pumps	1.4*	1.4*

CLASSROOM TIME (Hours)

NLO	NLOR	LPRO	LPSO	LOR
		3	3	2

OBJECTIVES

	OBJECTIVE	NLO	NLOR	LPRO	LPSO	LOR
1	Explain the purpose for AP/15 (Loss of Vital or Aux Control Power). AP15001			X	X	X
2	Analyze the mitigating strategy (major actions) contained in the procedure. AP15002			X	X	X
3	Given scenarios describing accident events and plant conditions, evaluate the basis for any caution, note, or step. AP15003			X	X	X
4	Given scenarios describing accident events and plant conditions, evaluate conditions which require application of continuous action steps. AP15004			X	X	X

19. **Hydrogen Analyzer 1B:**

    __ • Sample containment isolation valves fail closed.

20. **Loss of Control Power to the following breakers prevents remote operation; however, local manual operation of these breakers is possible provided the Charging Springs are "Charged":**

    __ • All Breakers on 4160 V Switchgear 1ETB

    __ • All Breakers on 600 V Load Center 1ELXB

    __ • All Breakers on 600 V Load Center 1ELXD.

21. **The shunt trip coils associated with the following breakers will not operate. Breaker trip capability is still functional via the "UV" coils.**

    __ • Reactor Trip Breaker 1RTB

    __ • Reactor Trip Bypass Breaker 1BYB.

__ 22. **Loss of all protective relaying for 4160 V Switchgear 1ETB.**

..075.K2.03	10/20/2000	Mark Question			Print Recor	New Searc	Exit
Braidwood 1	**Exam Level** R						

Question	The unit is presently at 90% and shutting down due to a loss of Instrument Bus 114. All systems are in automatic. A Loss of Coolant Accident (LOCA) occurs. Which of the following statements best describes response of the 1B SX pump?
Answer:	Will have to be manually started.
Distracter 1	Will automatically start on low system pressure.
Distracter 2	Cannot be started from the control room.
Distracter 3	Will automatically start on a Manual SI actuation.

Distracter Analysis:

Answer:

Distracter 1:

Distracter 2:

Distracter 3:

1 Pt. The Unit 1 RO has been informed that Maintenance no longer needs "A" Main Fire pump running. The following sequence of events occurs:

- "A" Jockey pump started in "manual"
- "A" Main Fire pump "off" pushbutton is depressed and held
- RF header pressure drops to and remains at 80#
- "A" Main Fire pump "off" pushbutton released.
- "A" Main Fire pump remains off.
- "A" and "B" Jockey pumps returned to "auto"

What concerns (if any) should be addressed due to the securing of the "A" Main Fire pump?

A. **No concerns, "A" Main Fire pump is operable since auto (normal and backup) and manual start available.**

B. **"A" Main Fire pump is operable but degraded due to "anti pump circuit" activated; the backup pressure switch (60#) is the only start capability available to the pump.**

C. **"A" Main Fire pump is operable since manual start is available. Auto start capability (normal or backup) not required for operability.**

D. **"A" Main Fire pump inoperable due to "anti pump circuit" activated. Breaker control power fuses need to be removed and installed to clear circuitry.**

Bank Question: 1154 **Answer: D**

1 Pt. The Unit 1 RO has been informed that Maintenance no longer needs "A" Main Fire pump running. The following sequence of events occurs:

- "A" Jockey pump started in "manual"
- "A" Main Fire pump "off" pushbutton is depressed and held
- RF header pressure drops to and remains at 80#
- "A" Main Fire pump "off" pushbutton released.
- "A" Main Fire pump remains off.
- "A" and "B" Jockey pumps returned to "auto"

What concerns (if any) should be addressed due to the securing of the "A" Main Fire pump?

A. **No concerns, "A" Main Fire pump is operable since auto (normal and backup) and manual start available.**

B. **"A" Main Fire pump is operable but degraded due to "anti pump circuit" activated; the backup pressure switch (60#) is the only start capability available to the pump.**

C. **"A" Main Fire pump is operable since manual start is available. Auto start capability (normal or backup) not required for operability.**

D. **"A" Main Fire pump inoperable due to "anti pump circuit" activated. Breaker control power fuses need to be removed and installed to clear circuitry.**

Distracter Analysis:.

A. **Incorrect**:
Plausible:

B. **Incorrect**:
Plausible:

C. **Incorrect**:
Plausible:

D. **Correct**

LEVEL: RO & SRO

KA: 086 A2.03 (2.7/2.9)

SOURCE: NEW

LEVEL OF KNOWLEDGE: Comprehension

AUTHOR: CWS

LESSON: OP-MC-SS-RFY

OBJECTIVES: OP-MC-SS-RFY, obj 27

REFERENCES: OP-MC-SS-RFY, page 63

SYSTEM:	**086 Fire Protection System (FPS)**		
K6	**Knowledge of the effect of a loss or malfunction on the Fire Protection System following will have on the :** (CFR: 41.7 / 45.7)		
K6.01	Pumps	2.1	2.3
K6.02	Valves	1.9	1.9
K6.03	Motors	1.7	1.9
K6.04	Fire, smoke, and heat detectors	2.6	2.9
A1	**Ability to predict and/or monitor changes in parameters (to prevent exceeding design limits) associated with Fire Protection System operating the controls including:** (CFR: 41.5 / 45.5)		
A1.01	Fire header pressure	2.9	3.3
A1.02	Fire water storage tank level	3.0*	3.2*
A1.03	Fire doors	2.7	3.2*
A1.04	Fire dampers	2.7	3.3
A1.05	FPS lineups	2.9	3.1
A2	**Ability to (a) predict the impacts of the following malfunctions or operations on the Fire Protection System; and (b) based on those predictions, use procedures to correct, control, or mitigate the consequences of those malfunctions or operations:** (CFR: 41.5 / 43.5 / 45.3 / 45.13)		
A2.01	Manual shutdown of the FPS	2.9	3.1
A2.02	Low FPS header pressure	3.0	3.3
[redacted]	Inadvertent actuation of the FPS due to circuit failure or welding	2.7	2.9
A2.04	Failure to actuate the FPS when required, resulting in fire damage	3.3	3.9
A3	**Ability to monitor automatic operation of the Fire Protection System including:** (CFR: 41.7 / 45.5)		
A3.01	Starting mechanisms of fire water pumps	2.9	3.3
A3.02	Actuation of the FPS	2.9	3.3
A3.03	Actuation of fire detectors	2.9	3.3
A4	**Ability to manually operate and/or monitor in the control room:** (CFR: 41.7 / 45.5 to 45.8)		
A4.01	Fire water pumps	3.3	3.3
A4.02	Fire detection panels	3.5	3.5
A4.03	Fire alarm switch	3.5	3.4
A4.04	Fire water storage tank makeup pumps	3.4*	3.3*
A4.05	Deluge valves	3.0	3.5
A4.06	Halon system	3.2	3.2*

	OBJECTIVE	NLO	NLOR	LPRO	LPSO	LOR
24	Discuss the operation of the Cardox Pressure switch plunger (push to reset) located under the halon Fire Protection Control Panel near the door in each Diesel Generator room and in the Turbine Building basement near the Auxiliary Feedwater Pump Turbine halon cylinders.	X	X	X	X	
25	Discuss the function of the manual actuator lever and pull key for both the main and reserve halon cylinders for the Auxiliary Feedwater Pump Turbine rooms.	X	X	X	X	
26	Describe the function of the following components on the CA Pump Turbine room halon control panel: • Discharge Station Main ON/OFF switch • Discharge Station Reserve ON/OFF switch • System Abort ON/OFF switch • Main/Reserve Transfer switch	X	X	X	X	
27	[redacted]associated with the Fire Protection System, discuss its basis and when it applies.		X	X	X	X
28	Concerning the Selected Licensee Commitments (SLC) related to the Fire Protection System : For any commitments that have action required within one hour, state the action. Given a set of parameter values or system conditions, determine if any commitment is (are) not met and any action(s) required within one hour. Given a set of plant parameters or system conditions and the SLC Manual, determine required action(s). Given the SLC Manual, discuss the basis for a given commitment. *** SRO ONLY**			X X X	X X X X	X X X *

Depressing and holding the "Off" pushbuttons for the A and B RF Pumps could activate the anti-pumping circuitry. The activation of this circuitry makes the A and B RF Pumps Inoperable while the auto start signal is present. **IF** system pressure does **NOT** recover, the only way to clear the anti pumping circuitry is to pull the control power fuses for the A and B RF pump breakers and re-installing them. Due to concern for masking a degraded condition associated with increasing close times of the RF Pump recirc valve and the staggered auto start pressures, Engineering believes that there is little benefit to holding the "Off" pushbuttons to prevent an auto re-start of A and B RF Pumps.

Basis: This precaution is self explanatory

The following are the limits and precautions listed in the Fire Protection Procedure OP/0/A/6400/02B (Halon Fire Protection System):

1. If a manual actuation of halon is desired, dump the bank already selected for automatic release first. (This prevents draining both banks of halon into the same room; one manually and one automatically). If the selector switch is not visible from the halon actuation point, discharge the "MAIN" bank first since it will normally be the selected for automatic release.

   Basis: This precaution is self explanatory

2. Electro-thermal links TL1 and TL2 (Fire Damper in CA Pump Room) must be replaced anytime Halon is discharged electrically. If release was manually initiated at cylinder, check fire damper position and have thermal links replaced if dampers are closed.

   Basis: This precaution is self explanatory

3.2 Abnormal and Emergency Operation

3.2.1 Sprinkler or Mulsifyre System Abnormal/Emergency Operation

The Main Fire Pumps A & B are capable of being powered by the Emergency diesels by back charging the 6900vac bus. The procedural guidance for performing this evolution is in AP/1/A/5500/07 (Loss of Electrical power) Step 31 provides the criteria and Encl. 11 for the steps for pump B and AP/2/A/5500/07 encl.11 for pump A..

3.2.2 Diesel Generator Halon 1301 Fire Suppression System Abnormal/Emergency Operation

To perform an electric discharge of halon perform the following:

1) Depress the main or reserve pushbutton on one of the two fire protection panels located in the desired diesel room.
2) Hold the button in for 5 full seconds to ensure complete discharge.

1 Pt. Per OMP 2-2 Conduct of Operations which one of the following would **NOT** require alerting plant personnel via the page?

A. Starting a Safety Injection Pump

B. Initiation of Steam Generator Blowdown

C. Starting a Reactor Makeup Water Pump

D. Opening CF Isolation Valves

Bank Question: 1155 **Answer: C**

1 Pt. Per OMP 2-2 Conduct of Operations which one of the following would **NOT** require alerting plant personnel via the page?

A. Starting a Safety Injection Pump

B. Initiation of Steam Generator Blowdown

C. Starting a Reactor Makeup Water Pump

D. Opening CF Isolation Valves

Distracter Analysis:

A. Incorrect:
Plausible:
B. Incorrect:
Plausible:
C. Correct:
D. Incorrect
Plausible:

LEVEL: RO & SRO

KA: G2.1.1 (3.7/3.8)

SOURCE: NEW

LEVEL OF KNOWLEDGE: Memory

AUTHOR: CWS

LESSON: OP-MC-ADM-OMP

OBJECTIVES: OP-MC-ADM-OMP, obj 3

REFERENCES: OMP 2-2 page 7

2.0 GENERIC KNOWLEDGES AND ABILITIES

2.1 Conduct of Operations

2.1.1 **Knowledge of conduct of operations requirements.**
(CFR: 41.10 / 45.13)
IMPORTANCE RO 3.7 SRO 3.8

2.1.2 **Knowledge of operator responsibilities during all modes of plant operation.**
(CFR: 41.10 / 45.13)
IMPORTANCE RO 3.0 SRO 4.0

2.1.3 **Knowledge of shift turnover practices.**
(CFR: 41.10 / 45.13)
IMPORTANCE RO 3.0 SRO 3.4

2.1.4 **Knowledge of shift staffing requirements.**
(CFR: 41.10 / 43.2)
IMPORTANCE RO 2.3 SRO 3.4

2.1.5 **Ability to locate and use procedures and directives related to shift staffing and activities.**
(CFR: 41.10 / 43.5 / 45.12)
IMPORTANCE RO 2.3 SRO 3.4

2.1.6 **Ability to supervise and assume a management role during plant transients and upset conditions.**
(CFR: 43.5 / 45.12 / 45.13)
IMPORTANCE RO 2.1 SRO 4.3

2.1.7 **Ability to evaluate plant performance and make operational judgments based on operating characteristics, reactor behavior, and instrument interpretation.**
(CFR: 43.5 / 45.12 / 45.13)
IMPORTANCE RO 3.7 SRO 4.4

2.1.8 **Ability to coordinate personnel activities outside the control room.**
(CFR: 45.5 / 45.12 / 45.13)
IMPORTANCE RO 3.8 SRO 3.6

CLASSROOM TIME (Hours)

NLO	NLOR	LPRO	LPSO	LOR
2	2	3	3	3

OBJECTIVES

	OBJECTIVE	NLO	NLOR	LPRO	LPSO	LOR
1	Given OMP 1-1, Administration of Operations Management Procedures: • State the person responsible for Approval of OMP's. • State the responsibility of the OMP Owner. • State the persons accountable for compliance with the requirements of OMP's • State who can approve the deletion of an OMP. ADMOMP001	X	X	X	X	X
2	Given OMP 1-2, Operation's Change Management Process. • Discuss the purpose for this OMP ADMOMP029	X	X	X	X	X
3	Concerning OMP 2-2, Conduct of Operations. • Discuss the responsibilities of the following personnel: 1. Superintendent of Operations. 2. Shift Operations Manager 3. Shift Technical Advisor 4. Operations Shift Manager 5. Shift Supervisor 6. Reactor Operator 7. Operations Test Group • Define the term "Nuclear Control Operator" • Define the term "Controls" • Define Reactivity Changes that need to be communicated to the SRO ADMOMP002	X	X	X	X	X
4.	Concerning OMP 2-3, OPS Work Process Managers Group Responsibilities. • Discuss Roles and Responsibilities of Group ADMOMP030	X	X	X	X	X

Be knowledgeable of Technical Specifications and Operations procedures and comply with required limits and setpoints.

Notify the control room SRO upon assuming the responsibility of duties following the turnover process. This includes short term periods for relief during shift.

Maintain the control room unit logbooks per OMP 5-2 (Control Room Unit Logs).

Assume responsibility for HLP candidate actions during OJT for license training. Errors made by the HLP candidate will be assumed to have been made by the NCO observing or directing the candidate's activity.

Alert plant personnel via the plant paging system prior to starting large motor/pump loads greater than 600V. This alert should include an approximate time to start the equipment and the switchgear room or bus affected when possible (EXAMPLE: Starting 1A RC pump in approximately 2 min. Stand clear of Unit 1 6900v switchgear room).

Other plant equipment and evolution's meeting this requirement are:

- Starting Emergency Diesel Generators
- Starting Turbine Driven CA Pumps
- Opening/closing MSIVs
- Opening/closing PZR PORVs
- Opening/closing CF isolation valves
- Opening/closing Main Steam PORVs and safeties
- Energizing 6900V and 4160V transformers
- Returning Main Buslines to service (closing PCBs)
- Latching and tripping of Main Turbine and CF Pump Turbines
- Initiation of Steam Generator Blowdown
- Evolutions with the potential for the release of high energy steam/fluids
- NCO feels an announcement is warranted to ensure personnel safety.

There will normally be four NCOs assigned to the control room.

There shall be an NCO designated as OATC on each unit at all times.

The OATC and BOP roles are interchangeable between NCOs. A verbal turnover shall be performed prior to accepting responsibility for the new position. This turnover should include Unit status, any changes and specific work or evolutions in progress.

A minimum of 3 NCOs shall be in the control room at all times. Exceptions are allowed in emergency situations. Under these situations prompt action is required to restore minimum manning.

Third NCO should normally remain in the control room surveillance area (defined in Attachment 1) except when responding to alarms, conducting required control room work, or obtaining procedures.

Which one of the following is **NOT** required to be recorded in the Unit 2 Control Room Unit Log (autolog)? IAW OMP 5-2

A. **Cleared Removal and Restoration on 'B' RL Pump**

B. **Stopping '2A' Diesel Generator**

C. **Starting '2B' SSPS test**

D. **Fire Drill** on Unit 2 cable spreading room

Bank Question: 1156 **Answer: D**

Which one of the following is **NOT** required to be recorded in the Unit 2 Control Room Unit Log (autolog)?

A. Cleared Removal and Restoration on 'B' RL Pump

B. Stopping '2A' Diesel Generator

C. Starting '2B' SSPS test

D. Fire Drill

Distracter Analysis:.

A. Incorrect:
Plausible:
B. Incorrect:
Plausible:
C. Incorrect:
Plausible:
D. Correct

LEVEL: RO & SRO

KA: G2.1.18 (2.9/3.0)

SOURCE: NEW

LEVEL OF KNOWLEDGE: Memory

AUTHOR: CWS

LESSON: OP-MC-ADM-OMP

OBJECTIVES: OP-MC-ADM-OMP, obj 10

REFERENCES: OMP 5-2, page 6

2.1 Conduct of Operations (continued)

Ability to make accurate, clear and concise logs, records, status boards, and reports.
(CFR: 45.12 / 45.13)
IMPORTANCE RO 2.9 SRO 3.0

2.1.19 **Ability to use plant computer to obtain and evaluate parametric information on system or component status.**
(CFR: 45.12)
IMPORTANCE RO 3.0 SRO 3.0

2.1.20 **Ability to execute procedure steps.**
(CFR: 41.10 / 43.5 / 45.12)
IMPORTANCE RO 4.3 SRO 4.2

2.1.21 **Ability to obtain and verify controlled procedure copy.**
(CFR: 45.10 / 45.13)
IMPORTANCE RO 3.1 SRO 3.2

2.1.22 **Ability to determine Mode of Operation.**
(CFR: 43.5 / 45.13)
IMPORTANCE RO 2.8 SRO 3.3

2.1.23 **Ability to perform specific system and integrated plant procedures during all modes of plant operation.**
(CFR: 45.2 / 45.6)
IMPORTANCE RO 3.9 SRO 4.0

2.1.24 **Ability to obtain and interpret station electrical and mechanical drawings.**
(CFR: 45.12 / 45.13)
IMPORTANCE RO 2.8 SRO 3.1

2.1.25 **Ability to obtain and interpret station reference materials such as graphs, monographs, and tables which contain performance data.**
(CFR: 41.10 / 43.5 / 45.12)
IMPORTANCE RO 2.8 SRO 3.1

2.1.26 **Knowledge of non-nuclear safety procedures (e.g. rotating equipment, electrical, high temperature, high pressure, caustic, chlorine, oxygen and hydrogen).**
(CFR: 41.10 / 45.12)
IMPORTANCE RO 2.2 SRO 2.6

OBJECTIVES

	OBJECTIVE	NLO	NLOR	LPRO	LPSO	LOR
10.	Concerning OMP 5-2, Maintenance of Operations Logbooks: • Identify examples of logbook entries required by this OMP. • Identify any other logbook that is considered part of the Control Room Unit Logbooks • Discuss logbook review when "Relieving the Watch". • Discuss criteria for editing "Autolog" entries. ADMOMP006				X	X
11.	Concerning OMP 5-3, Technical Specifications Action Items Log: • State the responsibility of the Control Room SRO, other (second) licensed operator, Shift Work Manager, and Shift Operations Manager as it pertains to the Technical Specifications Action Items Log. • Discuss the criteria for Logging Items ADMOMP007			X	X	X
12.	Concerning OMP 5-4, Diesel Generator Logbook: • Discuss the responsibilities of the "OATC" or designee. ADMOMP008	X	X	X	X	X
13.	Concerning OMP 5-5, Surveillance Monitoring: • Discuss the "PHIT". • Discuss the Surveillance Expectations • Discuss the Surveillance Standards ADMOMP009	X	X	X	X	X
14.	Concerning OMP 5-6, RO Turnover. • Describe the procedure for RO Turnover. ADMOMP033			X	X	X
15.	Concerning OMP 5-8, Shift Supervision Turnover. • Describe the turnover process • Given attachments be able to complete attachments. • Describe the Control Room SRO Relief Process and the requirement for listing Minimum Shift Staffing Requirements ADMOMP034				X	X

6.7 Entries shall be made in a style to provide a complete and inclusive history of events and/or evolutions including final disposition of the evolution or event. This will ensure the "information loop" for log entries is properly closed. Logs shall be maintained at a level of detail that will allow reconstruction of shift activities by personnel that do **NOT** have the benefit of a face-to-face discussion with off-going personnel. For example, when a major piece of equipment is started or stopped, the log entry should include the reason for the equipment change. Also, during unexpected conditions or transients that occur, a final log entry shall be included that will detail the reasons, what action was taken to correct the condition, and any pertinent information that will clarify the situation. It must be understood that this final entry may **NOT** be feasible until the following shift when more information is available. This will necessitate an accurate transfer of information between reactor operators on different shifts to insure the final log entry will be added. Duplicate Rounds log entries are **NOT** required for entries that would normally be logged in the Control Room Unit logs. For example, starting/stopping major equipment, fire brigade drills, etc. are normally logged in the Control Room unit log; therefore a separate entry in the appropriate Rounds log is **NOT** required. Similarly, if an operator starts/stops a piece of equipment during a round that would **NOT** normally be logged in the Control Room, a separate Control Room log entry is **NOT** required.

6.8 Entries concerning equipment shared by both units shall be denoted in both Units' logs. This may be accomplished by making the detailed entry in the Unit 1 log, followed by a reference entry in the Unit 2 log. The Service Building log is a sub log of the Unit 1 log. Therefore, separate rounds entries for shared equipment is **NOT** required. Administrative entries which are **NOT** unit specific need only be made in the Unit 1 Log. For example:

6.8.1 Administrative items such as official weather watches and warnings

6.8.2 Non unit specific regulatory or Duke Power Co. senior management notifications

6.8.3 Non unit specific security notifications or events

6.8.4 Transportation of injured persons offsite

6.8.5 Non unit specific fires

[redacted]

6.10 The Technical Specification Action Item Log (TSAIL - computer version) is considered an extension of the Control Room Unit Logs and info logged therein need **NOT** be duplicated in the Control Room Unit Log.

7. Log Entries

7.1 The Initial entry for each log will be made using the currently approved computer stamp, for the applicable unit and mode.

7.2 The following types of activities and occurrences shall be entered in the appropriate Control Room Unit Log:

- All personnel induced reactivity changes, intentional or otherwise
- Any unexpected changes in reactivity (Note: normal reactivity changes due to core operation such as burn-up, xenon build-in or decay, or those caused by already logged events such as power changes, system transients, etc. need **NOT** be logged.
- Significant notifications to or from plant personnel of equipment status, daily sample results, or requests for particular evolutions or system alignments.
- Unexpected or out-of-specification chemistry results
- Major equipment status changes such as:
  - Diesel Generator starts and/or stops and reason
  - Shifting of operating trains of equipment
- Major system and equipment testing such as:
  - SSPS Testing
  - RPS Testing
- Entry/exit into EPs/APs
- Personnel accidents or injuries resulting in MERT team response or transportation of injured persons offsite
- Entry into a Technical Specification Action Statement, which will **NOT** be entered into the TSAIL
- Exit from a Technical Specification Action Statement, which will **NOT** be entered into the TSAIL
- Issued R&R's with the serial number, primarily affected equipment number and nomenclature (usually only one piece of equipment need be identified) and a short description of the reason for removal
- Cleared R&R's
- Safety-related or other important equipment maintenance in progress
- Significant changes in radiological conditions
- Planned releases of radioactive effluents, including Release No., Tank, Start/Stop Date & Time, and Volume Released.

NOTE: Any abnormal occurrence during a release (i.e., high radiation alarm, automatic EMF actions, etc.) should also be logged.

- Unexpected releases of radioactive effluents, including start and stop dates and times
- Implementation of the Emergency Plan
- Potentially reportable occurrences

- Occurrence of significant events, such as Unit trips, unexpected power changes, unexpected radiation releases, or radiation overexposures
- Security incidents
- Public telephone calls involving security threats, pranks, or complaints against McGuire Nuclear Station or any Duke Energy Company.
- Operation of equipment in accordance with temporary operating instructions/procedures
- After each use (i.e., boration, dilution, or blended makeups), the contents of the reactor coolant makeup header line will be logged indicating whether the header was flushed.
- Receipt of significant unexpected alarms or indications, to include the alarm panel and coordinates, instrument identification number, alarm or instrument nomenclature, action taken to assess and mitigate the occurrence, and the final status, resolution or return-to-normal, of the parameter(s) - **NOTE:** A complete log entry should answer the following questions - When the event/alarm occurred; WHERE the event/alarm is; WHY the event/alarm happened; HOW the event/alarm was handled or corrected. **NOTE:** Repeat occurrences due to the same cause during the same shift need only be logged as "Received " with the alarm panel and coordinates or instrument identification number, additional action taken, if any, and the extent of any further degradation of equipment caused by the occurrence, if any.
- Significant spills of oil, chemicals, water, hazardous materials, or radioactive fluids
- Off-site notifications to or from senior management, on-call supervisors, NRC, INPO, or federal, state, or local government regulatory agencies concerning significant events
- Implementation of any National Weather Service watch or warning which may threaten the plant
- Significant make-up of inventory to plant systems, to include sample results, as appropriate
- Miscellaneous factual information deemed pertinent by the OSM, Control Room SRO, or OATC
- Fuel movement (at the beginning of each shift) or any loads being moved over the irradiated fuel in the Spent Fuel Pool.

7.3 The following types of activities and occurrences shall be entered in the appropriate Rounds Log:

- Any unexpected changes in equipment operation or plant condition that requires additional monitoring or awareness.
- PIP #s generated during the shift that affect the round.
- Miscellaneous factual information deemed pertinent by the OSM, Shift SROs, ROs, or Rounds Operators.
- Starting/Stopping of important equipment **NOT** logged in the Control room logs.
- Issued R&Rs (**NOT** logged in Control Room log) with the R&R number, primarily affected equipment number and nomenclature (usually only one piece of equipment need be identified) and a short description of the reason for removal.
- Cleared R&Rs **NOT** logged in Control Room log.
- Significant notifications to or from plant personnel of equipment status, or requests for particular evolutions or system alignments **NOT** logged in the Control Room log.
- Significant changes in radiological conditions that may impact the round.
- Routine & non-routine procedures performed during the rounds such as main generator H2 makeup, draining ZP tank, etc. Autolog stamps are available for most routine procedure activities.
- Significant spills of oil, chemicals, water, hazardous materials, or radioactive fluids **NOT** logged in the Control Room.

2.1.18 10/3/2003

Prairie Island 1 **Exam Level** R

Mark Question | Print Recor | New Searc | Exit

Question

Which event is required to be recorded in the Unit 1 Reactor Log?

Answer: Placing the #11 Boric Acid Tank on recirc.

Distracter 1 Receipt of a fuel oil shipment.

Distracter 2 Addition of oil to the main turbine lube oil reservoir.

Distracter 3 Operation of the Water Treatment/Reverse Osmosis system.

Distracter Analysis:

Answer:

Distracter 1:

Distracter 2:

Distracter 3:

1 Pt. Per Technical Specifications Definitions, a MODE is determined by power level and....

A. Decay heat and average Reactor Coolant System temperature

B. Core reactivity, and auctioneered high Reactor Coolant System temperature

C. Decay heat and auctioneered high Reactor Coolant System temperature

D. Core reactivity and average Reactor Coolant System temperature

---

Bank Question: 1157 **Answer: D**

1 Pt. Per Technical Specifications Definitions, a MODE is determined by power level and....

A. **Decay heat and average Reactor Coolant System temperature**

B. **Core reactivity, and auctioneered high Reactor Coolant System temperature**

C. **Decay heat and auctioneered high Reactor Coolant System temperature**

D. **Core reactivity and average Reactor Coolant System temperature**

Distracter Analysis:.

A. **Incorrect**:
Plausible:

B. **Incorrect**:
Plausible:

C. **Incorrect**:
Plausible:

(D.) **Incorrect**
Plausible:

LEVEL: RO & SRO

KA: 2.1.22 (2.8/3.3)

SOURCE: BANK Braidwood 1 NRC Exam 2000

LEVEL OF KNOWLEDGE: Memory

AUTHOR: CWS

LESSON: OP-MC-ADM-TS

OBJECTIVES: OP-MC-ADM-TS, obj 4

REFERENCES: OP-MC-ADM-TS, page 49

2.1 Conduct of Operations (continued)

2.1.18 **Ability to make accurate, clear and concise logs, records, status boards, and reports.**
(CFR: 45.12 / 45.13)
IMPORTANCE RO 2.9 SRO 3.0

2.1.19 **Ability to use plant computer to obtain and evaluate parametric information on system or component status.**
(CFR: 45.12)
IMPORTANCE RO 3.0 SRO 3.0

2.1.20 **Ability to execute procedure steps.**
(CFR: 41.10 / 43.5 / 45.12)
IMPORTANCE RO 4.3 SRO 4.2

2.1.21 **Ability to obtain and verify controlled procedure copy.**
(CFR: 45.10 / 45.13)
IMPORTANCE RO 3.1 SRO 3.2

2.1.22 [redacted]
(CFR: 43.5 / 45.13)
IMPORTANCE RO 2.8 SRO 3.3

2.1.23 **Ability to perform specific system and integrated plant procedures during all modes of plant operation.**
(CFR: 45.2 / 45.6)
IMPORTANCE RO 3.9 SRO 4.0

2.1.24 **Ability to obtain and interpret station electrical and mechanical drawings.**
(CFR: 45.12 / 45.13)
IMPORTANCE RO 2.8 SRO 3.1

2.1.25 **Ability to obtain and interpret station reference materials such as graphs, monographs, and tables which contain performance data.**
(CFR: 41.10 / 43.5 / 45.12)
IMPORTANCE RO 2.8 SRO 3.1

2.1.26 **Knowledge of non-nuclear safety procedures (e.g. rotating equipment, electrical, high temperature, high pressure, caustic, chlorine, oxygen and hydrogen).**
(CFR: 41.10 / 45.12)
IMPORTANCE RO 2.2 SRO 2.6

SEQ	OBJECTIVE	NLO	NLOR	LPRO	LPSO	LOR
4	Given a set of plant conditions, determine the plant MODE.	X	X	X	X	X
5	Explain the use of logical connectors and apply these rules to any given Technical Specification.			X	X	X
6	Explain the rules for Completion Times and apply these rules to determine the time allowed for completing the Required Action(s).			X	X	X
7	Explain the Frequency rules for periodic actions (both Required Actions and Surveillance Requirements) and apply these rules to determine when a periodic action must be performed.			X	X	X
8	Given a Technical Specification and associated Bases, determine the system components that are required to be OPERABLE to meet the LCO (Limiting Condition for Operation).			X	X	X

Objective # 3

4.1.3 Operable – Operability

A system, subsystem, train, component, or device shall be OPERABLE or have OPERABILITY when it is capable of performing its specified safety function(s) and when all necessary attendant instrumentation, controls, normal or emergency electrical power, cooling and seal water, lubrication, and other auxiliary equipment that are required for the system, subsystem, train, component, or device to perform its specified safety function(s) are also capable of performing their related support function(s).

Objective # 4

4.1.4 Mode Table

In addition, you must be able to determine the plant MODE when given a set of plant conditions. Therefore, you should learn the Mode Table listed below. You will find this table on page 1.1-6 of the Improved Technical Specifications.

MODE Table

MODE	TITLE	REACTIVITY CONDITION (k_{eff})	% RATED THERMAL POWER [a]	AVERAGE REACTOR COOLANT TEMPERATURE (°F)
1	Power Operation	≥ 0.99	>5	NA
2	Startup	≥ 0.99	≤ 5	NA
3	Hot Standby	< 0.99	NA	≥ 350
4	Hot Shutdown[b]	< 0.99	NA	350 >T_{avg} >200
5	Cold Shutdown[b]	< 0.99	NA	≤ 200
6	Refueling[c]	NA	NA	NA

(a) Excluding decay heat.

(b) All reactor vessel head closure bolts fully tensioned.

(c) One or more reactor vessel head closure bolts less than fully tensioned.

..2.1.22 10/20/2000

Braidwood 1 Exam Level R

Mark Question | Print Recor | New Search | Exit

Per Technical Specification Definitions, a MODE is determined by power level ..

Question

Answer: core reactivity, and average RCS temperature.

Distracter 1 core reactivity, and auctioneered high RCS temperature.

Distracter 2 decay heat, and average RCS temperature.

Distracter 3 decay heat, and auctioneered high RCS temperature.

Distracter Analysis:

Answer:

Distracter 1:

Distracter 2:

Distracter 3:

1 Pt. Given the following conditions on Unit 2:

- Core unload is in progress
- IAE informs the Control Room that both N31 and N32 Source Range Channels must be considered INOPERABLE due to detector deterioration concerns.
- Both W/R neutron detectors are OPERABLE

Which one of the following describes the effect of N31 and N32 being INOPERABLE on refueling operations?

A. Refueling may continue providing both W/R neutron detector shutdown monitors are OPERABLE.

B. Refueling may continue provided a Reactor Operator is designated to initiate containment evacuation on a high flux alarm.

C. Immediately suspend refueling until at least N31 or N32 is restored to OPERABLE

D. Immediately suspend refueling until both N31 and N32 are restored to OPERABLE.

Bank Question: 1158 **Answer: C**

1 Pt. Given the following conditions on Unit 2:

- Core unload is in progress
- IAE informs the Control Room that both N31 and N32 Source Range Channels must be considered INOPERABLE due to detector deterioration concerns.
- Both W/R neutron detectors are OPERABLE

Which one of the following describes the effect of N31 and N32 being INOPERABLE on refueling operations?

A. Refueling may continue provided both W/R neutron detector shutdown monitors are OPERABLE.

B. Refueling may continue provided a Reactor Operator is designated to initiate containment evacuation on a high flux alarm.

C. Immediately suspend refueling until at least N31 or N32 is restored to OPERABLE

D. Immediately suspend refueling until both N31 and N32 are restored to OPERABLE.

Distracter Analysis:

A. Incorrect:
Plausible:
B. Incorrect:
Plausible:
C. Correct:
D. Incorrect
Plausible:

LEVEL: RO & SRO

KA: G2.2.26 (2.5/3.7)

SOURCE: NEW

LEVEL OF KNOWLEDGE: Memory

AUTHOR: CWS

LESSON: OP-MC-FH-FC

OBJECTIVES: OP-MC-FH-FC, obj 7

REFERENCES: OP-MC-FH-FC, page 27
T.S. Basis, page B 3.9.3-1

2.2 **Equipment Control (Continued)**

2.2.18 **Knowledge of the process for managing maintenance activities during shutdown operations.**
(CFR: 43.5 / 45.13)
IMPORTANCE RO 2.3 SRO 3.6

2.2.19 **Knowledge of maintenance work order requirements.**
(CFR: 43.5 / 45.13)
IMPORTANCE RO 2.1 SRO 3.1

2.2.20 **Knowledge of the process for managing troubleshooting activities.**
(CFR: 43.5 / 45.13)
IMPORTANCE RO 2.2 SRO 3.3

2.2.21 **Knowledge of pre- and post-maintenance operability requirements.**
(CFR: 43.2)
IMPORTANCE RO 2.3 SRO 3.5

2.2.22 **Knowledge of limiting conditions for operations and safety limits.**
(CFR: 43.2 / 45.2)
IMPORTANCE RO 3.4 SRO 4.1

2.2.23 **Ability to track limiting conditions for operations.**
(CFR: 43.2 / 45.13)
IMPORTANCE RO 2.6 SRO 3.8

2.2.24 **Ability to analyze the affect of maintenance activities on LCO status.**
(CFR: 43.2 / 45.13)
IMPORTANCE RO 2.6 SRO 3.8

2.2.25 **Knowledge of bases in technical specifications for limiting conditions for operations and safety limits.**
(CFR: 43.2)
IMPORTANCE RO 2.5 SRO 3.7

2.2.26 **Knowledge of refueling administrative requirements.**
(CFR: 43.5 / 45.13)
IMPORTANCE RO 2.5 SRO 3.7

2.2.27 **Knowledge of the refueling process.**
(CFR: 43.6 / 45.13)
IMPORTANCE RO 2.6 SRO 3.5

CLASSROOM TIME (Hours)

NLO	NLOR	LPRO	LPSO	LOR
		1.5	1.5	1.5

OBJECTIVES

	OBJECTIVE	NLO	NLOR	LPRO	LPSO	LOR
1	Describe the roles and responsibilities of Control Room Operators during Fuel Handling operations.			X	X	X
2	Describe the roles and responsibilities of Fuel Handling SRO's during Fuel Handling operations.				X	X
3	Describe how monitoring of core reactivity is accomplished during Fuel Handling.			X	X	X
4	Deleted					
5	Describe the requirements that must be met before **bypassing** a Fuel Handling Interlock.			X	X	X
6	Concerning AP-25, Spent Fuel Damage; AP-40, Loss of Refueling Canal; and AP-41, Loss of Spent Fuel Cooling or Level: • State the purpose of the AP • Given symptoms, state the AP and Case (if applicable)			X	X	X
7	Concerning the Technical Specifications related to the FC System; • Given the LCO title, state the LCO (including any COLR values) and applicability. • For any LCO's that have action required within one hour, state the action. • Given a set of parameter values or system conditions, determine if any Tech. Spec. is (are) not met and any action(s) required within one hour. • Given a set of plant parameters values or system conditions and the appropriate Tech Specs, determine required action(s). • Discuss the basis for a given Tech. Spec. LCO or Safety Limit. *** SRO only**			X X X	X X X X	X X X *

4.0 TECHNICAL SPECIFICATIONS

Objective #7

4.1. Tech. Spec. 3.9.1 Page 3.9.1-1

LCO Boron in RCS, Refueling Canal, Refueling Cavity > COLR value (*Unit 1 currently 2675 ppm).*

APPLICABILITY Mode 6

ACTION Immediately suspend CORE ALTERATIONS **AND** positive reactivity changes **AND** initiate action to restore boron concentration to within limits.

BASIS (1) Ensure the reactor will remain subcritical during CORE ALTERATIONS, and (2) uniform boron for reactivity control. The accident assumed that requires these limitations as initial conditions is the boron dilution accident. Normally, Reactor Makeup Water is isolated during refueling to prevent diluting the boron. Isolation is normally accomplished via NV-250.

4.2. Tech. Spec. 3.9.2 Page 3.9.2-1

LCO Each valve used to isolate unborated water sources shall be secured in the closed position.

APPLICABILITY Mode 6

ACTION Immediately suspend CORE ALTERATIONS **AND** immediately initiate action to secure valve in closed position **AND** perform SR 3.9.1.1. *(verifying boron conc.)* within 4 hours.

BASIS Prevent unplanned boron dilution during MODE 6 and thus avoid a reduction in shutdown margin.

4.3. Tech. Spec. 3.9.3 Page 3.9.3-1

LCO Two SR Monitors OPERABLE.

APPLICABILITY Mode 6

ACTION With one monitor inoperable immediately suspend CORE ALTERATIONS **AND** positive reactivity changes. With both inoperable immediately initiate action to restore one **AND** determine boron once/12 hrs.

BASIS Ensures redundant monitoring capability to detect reactivity changes. The WR Neutron Flux Detectors (ENC) can be used. All of the LCO, ACTION, and SURVEILLANCE REQUIREMENTS must be met for the two monitors in use at any time and the monitors have alarm set at 0.5 decades above steady state background.

B 3.9 REFUELING OPERATIONS

B 3.9.3 Nuclear Instrumentation

BASES

BACKGROUND

The source range neutron flux monitors are used during refueling operations to monitor the core reactivity condition. The installed source range neutron flux monitors are part of the Nuclear Instrumentation System (NIS) and the Wide Range Neutron Flux Monitoring System (Gamma-Metrics). Source range indication is provided via the NIS source range channels and the Gamma-Metrics shutdown monitors using detectors located external to the reactor vessel. These detectors monitor neutrons leaking from the core. Neutron flux indication is provided in counts per second. The NIS Source Range Channels are BF3 detectors with a range of 1 to 1E6 cps. The Wide Range channels are fission chambers with a range of O.1 to 1E5 cps (in the startup range). The NIS source range channels and the Gamma-Metrics shutdown monitors provide continuous visible count rate indication in the control room and an audible high flux control room alarm to alert operators to a possible dilution accident. Although not required by this LCO, the NIS source range channels provide audible count rate indication in the control room and in the containment and an automatic high flux (containment evacuation) alarm in containment to alert personnel. Administrative controls that require at least one NIS source range channel OPERABLE during CORE ALTERATIONS will ensure that personnel moving fuel in the reactor building will have an audible indication of source range counts and an automatic containment evacuation alarm on a high flux at shutdown condition. The NIS is designed in accordance with the criteria presented in Reference 1.

APPLICABLE SAFETY ANALYSES

Two OPERABLE source range neutron flux monitors are required to provide a signal to alert the operator to unexpected changes in core reactivity such as with a boron dilution accident (Ref. 2) or an improperly loaded fuel assembly.

The source range neutron flux monitors satisfy Criterion 3 of 10 CFR 50.36 (Ref. 3).

LCO

This LCO requires that two source range neutron flux monitors be OPERABLE to ensure that redundant monitoring capability is available to detect changes in core reactivity.

1 Pt. Which one of the following is a responsibility of the Operator at the Controls during fuel movement?

A. **Give permission to fuel handling crew to bypass a fuel handling interlock.**

B. **Give permission prior to unloading each fuel assembly.**

C. **Give permission to fuel transfer personnel to raise fuel assembly in upender.**

D. **Give fuel handling crew permission prior to latching and unlatching control rods.**

Bank Question: 1159 **Answer: B**

1 Pt. Which one of the following is a responsibility of the Operator at the Controls during fuel movement?

A. Give permission to fuel handling crew to bypass a fuel handling interlock.

B. Give permission prior to unloading each fuel assembly

C. Give permission to fuel transfer personnel to raise fuel assembly in upender.

D. Give fuel handling crew permission prior to latching and unlatching control rods.

Distracter Analysis:.

A. Incorrect:
Plausible:
B. Correct:
C. Incorrect:
Plausible:
D. Incorrect

LEVEL: RO & SRO

KA: G2.2.30 (3.5/3.3)

SOURCE: NEW

LEVEL OF KNOWLEDGE: Memory

AUTHOR: CWS

LESSON: OP-MC-FH-FC

OBJECTIVES: OP-MC-FH-FC, obj 1

REFERENCES: OP-MC-FH-FC pages 9 and 11

2.2 Equipment Control (Continued)

2.2.28 **Knowledge of new and spent fuel movement procedures.**
(CFR: 43.7 / 45.13)
IMPORTANCE RO 2.6 SRO 3.5

2.2.29 **Knowledge of SRO fuel handling responsibilities.**
(CFR: 43.6 / 45.12)
IMPORTANCE RO 1.6 SRO 3.8

2.2.30 **Knowledge of RO duties in the control room during fuel handling such as alarms from fuel handling area, communication with fuel storage facility, systems operated from the control room in support of fueling operations, and supporting instrumentation.**
(CFR: 45.12)
IMPORTANCE RO 3.5 SRO 3.3

2.2.31 **Knowledge of procedures and limitations involved in initial core loading.**
(CFR: 43.6)
IMPORTANCE RO 2.2 SRO 2.9*

2.2.32 **Knowledge of the effects of alterations on core configuration.**
(CFR: 43.6)
IMPORTANCE RO 2.3 SRO 3.3

2.2.33 **Knowledge of control rod programming.**
(CFR: 43.6)
IMPORTANCE RO 2.5 SRO 2.9

2.2.34 **Knowledge of the process for determining the internal and external effects on core reactivity.**
(CFR: 43.6)
IMPORTANCE RO 2.8 SRO 3.2*

CLASSROOM TIME (Hours)

NLO	NLOR	LPRO	LPSO	LOR
		1.5	1.5	1.5

OBJECTIVES

	OBJECTIVE	NLO	NLOR	LPRO	LPSO	LOR
1	Describe the roles and responsibilities of Control Room Operators during Fuel Handling operations.			X	X	X
2	Describe the roles and responsibilities of Fuel Handling SRO's during Fuel Handling operations.				X	X
3	Describe how monitoring of core reactivity is accomplished during Fuel Handling.			X	X	X
4	Deleted					
5	Describe the requirements that must be met before **bypassing** a Fuel Handling Interlock.			X	X	X
6	Concerning AP-25, Spent Fuel Damage; AP-40, Loss of Refueling Canal; and AP-41, Loss of Spent Fuel Cooling or Level: • State the purpose of the AP • Given symptoms, state the AP and Case (if applicable)			X	X	X
7	Concerning the Technical Specifications related to the FC System; • Given the LCO title, state the LCO (including any COLR values) and applicability. • For any LCO's that have action required within one hour, state the action. • Given a set of parameter values or system conditions, determine if any Tech. Spec. is (are) not met and any action(s) required within one hour. • Given a set of plant parameters values or system conditions and the appropriate Tech Specs, determine required action(s). • Discuss the basis for a given Tech. Spec. LCO or Safety Limit. *** SRO only**			X X X	X X X X	X X X *

1.0 INTRODUCTION

1.1. Fuel Handling Overview

Movement of Nuclear Fuel during core offload and core reload is a significant plant evolution. The fuel assemblies and inserts are discharged from the core into the spent fuel pool (core offload). Control rods, burnable poisons, source rods and thimble plugs are shuffled. Fuel rods are examined for leakers, leakers are reconstituted. Fresh fuel assemblies, along with once and twice burned fuel are reloaded into the core (core reload).

Several important issues need to be considered during the performance of fuel handling operations:

- Roles and Responsibilities
- Controlling Core Reactivity
- Foreign Material Exclusion
- Bypassing Fuel Handling Interlocks
- Abnormal Procedures

1.2. Roles and Responsibilities

Operations Shift Manager

Responsible for the safe operation of the plant. Supervises all of the licensed and unlicensed Operators. Is responsible for responding to any abnormal plant response including refueling problems.

Objective #2

Fuel Handling SRO

An SRO with no other concurrent responsibilities and shall direct supervision of core alterations. No reactivity additions or core alterations can be made without the direct supervision of the Fuel Handling SRO. The fuel handling SRO should be notified of any indications of fuel damage, unexpected reactivity changes or changes in refueling or spent fuel pool water levels. Core alterations include: 1) Fuel Movement 2) Control Rod Movement (including latching and unlatching control rods) 3) Neutron Source manipulation 4) Removal of Reactor Vessel Internals.

Who is the Fuel Handling SRO?

The SRO actively in charge on the reactor building operating deck during core alteration activities. Although the relief SRO may be on site, **all approvals shall be through the SRO actively in charge.**

The following is a specific list of Fuel Handling SRO responsibilities:

1. Ensure all fuel handling activities are performed in a safe and efficient manner.
2. Securing fuel handling operations as required by Tech Specs, Plant conditions, Safety concerns, or during times of uncertainty.
3. Should monitor refueling cavity to insure FME is being maintained.
4. Maintain constant communications with the control room during core alterations.
5. Assist the control room in monitoring refueling canal level, audible count rate and EMF or containment evacuation alarms.
6. Assist fuel handling crew in visually verifying fuel assemblies are lowered and raised safely. Gives hoist operator clearance to engage or disengage on fuel assemblies. Verifies assemblies are aligned properly and down on core plate prior to giving concurrence to disengage gripper.
7. Gives verbal clearance prior to pulling control rods during control rod latching, unlatching, and drag testing activities.
8. During core alterations, approve use of fuel handling bypass interlocks as necessary when not specified by an approved procedure (NSD 414).

Objective #1

Control Room Operators

Direct monitoring and manipulation of plant and reactor controls. Including monitoring of subcritical multiplication from nuclear instruments during core alterations. Responsible for implementing any necessary responses required by Abnormal Procedures. Logging and verifying technical specifications for MODE 6 and for core alterations. The Reactor Operator on the headset in the back of the control room communicates with the refueling crew. The Reactor Operator on the headset will get permission from the "Operator At The Controls" prior to unloading each fuel assembly. **The Operator at the Controls may stop fuel handling operations if, in his/her judgement, control room indication or communications show warranting conditions.**

Nuclear/Reactor Engineering

One responsibility is coordination of fuel movements during core loading operation by use of controlling procedure. Another is monitoring nuclear instrumentation to verify appropriate subcritical behavior and shutdown margin.

Fuel Handlers

One responsibility is operation of Fuel Handling Equipment in a safe manner moving fuel to locations recommended by reactor engineers by procedure. Another is the ability to recognize and properly respond to abnormal conditions.

1 Pt. While performing the Semi-Daily PT (PT/1/A/4600/003 A) an item that has been logged in Tech. Specs must be evaluated. Which of the following is the correct method of evaluating this item per OMP 4.1?

A. Number the item in sign off box, record item and T.S. number on discrepancy sheet, RO evaluate and complete discrepancy sheet.

B. Number the item in sign off box, record item and T.S. number on discrepancy sheet, SRO evaluate and complete discrepancy sheet.

C. RO initial sign off box since item is being tracked in Tech. Specs.

D. Leave sign off box blank, record item and T.S. number on discrepancy sheet, SRO evaluate and complete discrepancy sheet and sign off box.

Bank Question: 1160 **Answer: B**

1 Pt. While performing the Semi-Daily PT (PT/1/A/4600/003 A) an item that has been logged in Tech. Specs must be evaluated. Which of the following is the correct method of evaluating this item per OMP 4.1?

A. Number the item in sign off box, record item and T.S. number on discrepancy sheet, RO evaluate and complete discrepancy sheet.

B. Number the item in sign off box, record item and T.S. number on discrepancy sheet, SRO evaluate and complete discrepancy sheet.

C. RO initial sign off box since item is being tracked in Tech. Specs.

D. Leave sign off box blank, record item and T.S. number on discrepancy sheet, SRO evaluate and complete discrepancy sheet and sign off box.

Distracter Analysis:.

A. Incorrect:
Plausible:
B. Correct:
C. Incorrect:
Plausible:
D. Incorrect
Plausible:

LEVEL: RO & SRO

KA: 2.2.23 (2.6/3.8)

SOURCE: NEW

LEVEL OF KNOWLEDGE: Comprehension

AUTHOR: CWS

LESSON:

OBJECTIVES:

REFERENCES: OMP 4.1 pg. 25

2.2 Equipment Control (Continued)

2.2.18 **Knowledge of the process for managing maintenance activities during shutdown operations.**
(CFR: 43.5 / 45.13)
IMPORTANCE RO 2.3 SRO 3.6

2.2.19 **Knowledge of maintenance work order requirements.**
(CFR: 43.5 / 45.13)
IMPORTANCE RO 2.1 SRO 3.1

2.2.20 **Knowledge of the process for managing troubleshooting activities.**
(CFR: 43.5 / 45.13)
IMPORTANCE RO 2.2 SRO 3.3

2.2.21 **Knowledge of pre- and post-maintenance operability requirements.**
(CFR: 43.2)
IMPORTANCE RO 2.3 SRO 3.5

2.2.22 **Knowledge of limiting conditions for operations and safety limits.**
(CFR: 43.2 / 45.2)
IMPORTANCE RO 3.4 SRO 4.1

2.2.23 **Ability to track limiting conditions for operations.**
(CFR: 43.2 / 45.13)
IMPORTANCE RO 2.6 SRO 3.8

2.2.24 **Ability to analyze the affect of maintenance activities on LCO status.**
(CFR: 43.2 / 45.13)
IMPORTANCE RO 2.6 SRO 3.8

2.2.25 **Knowledge of bases in technical specifications for limiting conditions for operations and safety limits.**
(CFR: 43.2)
IMPORTANCE RO 2.5 SRO 3.7

2.2.26 **Knowledge of refueling administrative requirements.**
(CFR: 43.5 / 45.13)
IMPORTANCE RO 2.5 SRO 3.7

2.2.27 **Knowledge of the refueling process.**
(CFR: 43.6 / 45.13)
IMPORTANCE RO 2.6 SRO 3.5

9. Completion Of A Procedure

9.1 Complete the procedure

9.1.1 For OPs that have sign off steps, the person completing or ensuring completion of the procedure should fill out the Date(s) Performed and Procedure Completion Verification sections of the Procedure Process Record or NEDL cover sheet.

9.1.2 For PTs with discrepancies, the person completing or ensuring completion of the procedure should also fill out a Procedure Discrepancies Process Record.

9.2 Review the procedure

9.2.1 For OPs, an OPS Supervisor shall review the completed procedure.

9.2.1.1 For OPs that have sign off steps, the supervisor shall sign the Procedure Completion Approved on the Procedure Process Record or NEDL cover sheet.

9.2.1.2 Control Copy procedures in satellite procedure locations that are in plastic sleeves do **NOT** need to be reviewed.

9.2.2 For PTs without discrepancies, perform the following:

9.2.2.1 An OPS Supervisor or the Test Team Supervisor shall review the completed procedure to ensure that each surveillance item met its specified acceptance criteria, sign the Procedure Completion Approved on the Procedure Process Record or NEDL cover sheet.

9.2.2.2 The OPS Supervisor or Test Team Supervisor who reviewed the procedure shall ensure that the R041 screen is updated for the W/O associated with the PT. Ensure start and complete dates are correct.

9.2.3 For PTs with discrepancies, perform the following:

9.2.3.1 An OPS Supervisor shall review the Procedure Discrepancies Process Record to determine if any discrepancy is a deficiency, and that appropriate corrective action has been initiated.

9.2.3.2 **IF** the discrepancy does **NOT** affect the PT Acceptance Criteria, note "No" for deficiency and ensure the generation of any needed Work Request. The PT and applicable W/O can be completed.

9.2.3.3 **IF** the discrepancy does affect the PT Acceptance Criteria, note "Yes" for deficiency and:

A. Evaluate Tech Specs and make appropriate entries. At a minimum, the PT should be entered into TSAIL with the PT late date as the required time in TSAIL.

B. Note in the Remarks section that the associated PT must be completed before the TSAIL can be cleared.

C. OPS Supervisor or Test Team Supervisor who reviewed the procedure should ensure that the R041 screen is updated for the W/O associated with the PT. This will include documentation on the R121 screen what the deficiency is, any work requests that were initiated, and the late date for the PT. The W/O associated with the PT SHOULD **NOT** be made L/Complete.

D. Retain the procedure. PTs performed by OPS shift should be retained in the Work Control Center or in the Control Room. PTs performed by the OPS Test Team should be retained in the OPS Test Team area.

9.2.3.4 **IF** the deficiency prevents completion of the procedure:

A. Check "Yes" for deficiency.

B. Take appropriate action to correct the deficiency.

C. Retain the procedure.

9.3 Retain the procedure

9.3.1 For OPs that have signoff steps, (does **NOT** apply to R&R procedures) perform the following:

9.3.1.1 The Shift Support Assistant shall send completed Working Copies of OPs to Master File via a transmittal.

9.3.1.2 In the case of Reactivity Balance Calculation OP, the completed Working Copy will be routed to the Reactor Group for review and transmittal to Master File.

9.3.2 For OPs that do **NOT** contain signoffs, the Working Copy may be discarded.

1 Pt.

10CFR20 limits the radiation exposure (dose) to a qualified radiation worker to _____ per year. Duke Power limits the radiation dose to a qualified radiation worker to _____ per year without special authorization.

Which of the following describes those limits?

A. **10CFR20 limit 3000 mrem**
Duke Power limit 1500 mrem

B. **10CFR20 limit 5000 mrem**
Duke Power limit 3000 mrem

C. **10CFR20 limit 3000 mrem**
Duke Power limit 2000 mrem

D. **10CFR20 limit 5000 mrem**
Duke Power limit 2000 mrem

Bank Question: 1161 ***Answer: D***

1 Pt.

10CFR20 limits the radiation exposure (dose) to a qualified radiation worker to _____ per year. Duke Power limits the radiation dose to a qualified radiation worker to _____ per year without special authorization.

Which of the following describes those limits?

A. **10CFR20 limit 3000 mrem**
Duke Power limit 1500 mrem

B. **10CFR20 limit 5000 mrem**
Duke Power limit 3000 mrem

C. **10CFR20 limit 3000 mrem**
Duke Power limit 2000 mrem

D. **10CFR20 limit 5000 mrem**
Duke Power limit 2000 mrem

Distracter Analysis:.

A. **Incorrect:**
Plausible:
B. **Incorrect:**
Plausible:
C. **Incorrect:**
Plausible:
D. **Correct**

LEVEL: RO

KA: G2.3.1

SOURCE: BANK Prairie Island 1 2003 NRC Exam

LEVEL OF KNOWLEDGE: Memory

AUTHOR: CWS

LESSON:

OBJECTIVES:

REFERENCES:

2.3 Radiation Control

2.3.1 **Knowledge of 10 CFR: 20 and related facility radiation control requirements.**
(CFR: 41.12 / 43.4. 45.9 / 45.10)
IMPORTANCE RO 2.6 SRO 3.0

2.3.2 **Knowledge of facility ALARA program.**
(CFR: 41.12 / 43.4 / 45.9 / 45.10)
IMPORTANCE RO 2.5 SRO 2.9

2.3.3 **Knowledge of SRO responsibilities for auxiliary systems that are outside the control room (e.g., waste disposal and handling systems).**
(CFR: 43.4 / 45.10)
IMPORTANCE RO 1.8 SRO 2.9

2.3.4 **Knowledge of radiation exposure limits and contamination control, including permissible levels in excess of those authorized.**
(CFR: 43.4 / 45.10)
IMPORTANCE RO 2.5 SRO 3.1

2.3.5 **Knowledge of use and function of personnel monitoring equipment.**
(CFR: 41.11 / 45.9)
IMPORTANCE RO 2.3 SRO 2.5

2.3.6 **Knowledge of the requirements for reviewing and approving release permits.**
(CFR: 43.4 / 45.10)
IMPORTANCE RO 2.1 SRO 3.1

2.3.7 **Knowledge of the process for preparing a radiation work permit.**
(CFR: 41.10 / 45.12)
IMPORTANCE RO 2.0 SRO 3.3

2.3.8 **Knowledge of the process for performing a planned gaseous radioactive release.**
(CFR: 43.4 / 45.10)
IMPORTANCE RO 2.3 SRO 3.2

2.3.9 **Knowledge of the process for performing a containment purge.**
(CFR: 43.4 / 45.10)
IMPORTANCE RO 2.5 SRO 3.4

..2.3.1	10/3/2003					
Prairie Island 1	**Exam Level**	R	Mark Question		Print Recor	New Searc	Exit

Question	10CFR20 limits the radiation exposure (dose) to a qualified radiation worker to _____ per year. NMC limits the radiation dose to a qualified radiation worker to _____ per year without special authorization. 10CFR20 limitNMC limit
Answer:	10CFR20 limitNMC limit 5000 mrem2000 mrem
Distracter 1	10CFR20 limitNMC limit 3000 mrem1500 mrem
Distracter 2	10CFR20 limitNMC limit 3000 mrem2000 mrem
Distracter 3	10CFR20 limitNMC limit 5000 mrem3000 mrem

Distracter Analysis:

Answer:

Distracter 1:

Distracter 2:

Distracter 3:

1 Pt. Independent verification is required on various Unit 1 components. The following dose and dose rates are present.

- Single component verification 5 mrem
- Weekly dose for IV would be 75 mrem
- Components in 750 mrem/hr field

Which one of the following conditions (if any) would allow Independent verification to be waived per OMP 8-2 (Component Verification Techniques)?

A. Single component exposure

B. Weekly dose exposure

C. Dose rate exposure

D. Independent Verification can not be waived

Bank Question: 1162 **Answer: D**

1 Pt. Independent verification is required on various Unit 1 components. The following dose and dose rates are present.

- Single component verification 5 mrem
- Weekly dose for IV would be 75 mrem
- Components in 750 mrem/hr field

Which one of the following conditions (if any) would allow Independent verification to be waived per OMP 8-2 (Component Verification Techniques)?

A. Single component exposure

B. Weekly dose exposure

C. Dose rate exposure

D. Independent Verification can not be waived

Distracter Analysis:. Per the OMP 8-2 IV for components in these areas will not be waived

A. Incorrect:
Plausible:
B. Incorrect:
Plausible:
C. Incorrect:
Plausible:
D. Correct

LEVEL: RO & SRO

KA: G2.3.3 (2.5/2.9)

SOURCE: NEW

LEVEL OF KNOWLEDGE: Memory

AUTHOR: CWS

LESSON: OP-MC-ADM-OMP

OBJECTIVES: OP-MC-ADM-OMP Obj. 24

REFERENCES: OMP 8-2 page 21

2.3 Radiation Control

2.3.1 **Knowledge of 10 CFR: 20 and related facility radiation control requirements.**
(CFR: 41.12 / 43.4. 45.9 / 45.10)
IMPORTANCE RO 2.6 SRO 3.0

2.3.2 **Knowledge of facility ALARA program.**
(CFR: 41.12 / 43.4 / 45.9 / 45.10)
IMPORTANCE RO 2.5 SRO 2.9

2.3.3 **Knowledge of SRO responsibilities for auxiliary systems that are outside the control room (e.g., waste disposal and handling systems).**
(CFR: 43.4 / 45.10)
IMPORTANCE RO 1.8 SRO 2.9

2.3.4 **Knowledge of radiation exposure limits and contamination control, including permissible levels in excess of those authorized.**
(CFR: 43.4 / 45.10)
IMPORTANCE RO 2.5 SRO 3.1

2.3.5 **Knowledge of use and function of personnel monitoring equipment.**
(CFR: 41.11 / 45.9)
IMPORTANCE RO 2.3 SRO 2.5

2.3.6 **Knowledge of the requirements for reviewing and approving release permits.**
(CFR: 43.4 / 45.10)
IMPORTANCE RO 2.1 SRO 3.1

2.3.7 **Knowledge of the process for preparing a radiation work permit.**
(CFR: 41.10 / 45.12)
IMPORTANCE RO 2.0 SRO 3.3

2.3.8 **Knowledge of the process for performing a planned gaseous radioactive release.**
(CFR: 43.4 / 45.10)
IMPORTANCE RO 2.3 SRO 3.2

2.3.9 **Knowledge of the process for performing a containment purge.**
(CFR: 43.4 / 45.10)
IMPORTANCE RO 2.5 SRO 3.4

OBJECTIVES

	OBJECTIVE	NLO	NLOR	LPRO	LPSO	LOR
24.	Concerning OMP 8-2, Component Verification Techniques: • Define the following terms: 1. Self Verification. 2. Independent verification. 3. Separate Verification. 4. Double Verification. • State the requirements for a component to be "Essential to Safety". • List examples of components that require independent verification. • List all situations in which independent verification requirement can be waived. • Explain the methods utilized to verify the following: 1. Manual Valve position. 2. "Locked Open" or "Locked Closed" valve positions. 3. "Locked Throttle" valve position. 4. Motor Operated and Pneumatic valve positions. 5. Verification of Breaker Position. 6. Verification of Control Power. ADMOMP016	X	X	X	X	X
25.	Concerning OMP 9-1, Adjustment of Control Room Annunciator Sound Level. • Discuss the adjustments to the Annunciators volumes that can be made by the Operator. ADMOMP037	X	X	X	X	X
26.	Concerning OMP 9-2, Changing Lights in Control Borads. • Discuss the requirements needed when light bulbs are to be replaced above the Control Boards. • Discuss the requirements for changing a broken light bulb ADMOMP038	X	X	X	X	X

10. Exceptions

Independent Verification may be waived under any of the following situations with appropriate supervisory approval and documentation:

10.1 In any of the following situations that present a significant personnel radiation exposure:

10.1.1 Individual radiation exposure of greater than 10 mrem for a single Independent Verification.

10.1.2 Access to an area with a dose rate equal to or greater than 1 rem/hour.

10.1.3 Procedures with high exposures but less than the above exposure limits should be considered for being waived if exposure would exceed 100 mrem per week.

10.2 In situations that present a significant personnel safety risk. Station management is to evaluate and determine these situations.

10.3 Valves performing a safety function which receive an automatic signal to move to their proper safety position, unless these valves are removed from operability in a manner that would prevent automatic actuation.

10.4 On general vent and drain valves which would **NOT** prevent a safety related system from performing its safety function.

10.5 Under emergency conditions.

End of Body

1 Pt. The following sequence of events has occurred on Unit 1:

- The unit was tripped on 2/1/05 at 0100 per the shutdown procedure.
- The unit entered MODE 5 on 2/4/05 at 0100.
- On 2/10/05 at 0100 the control room entered AP/19 due to a loss of ND.
- The Reactor Coolant System is open to atmosphere.
- The FWST temperature is 80°F
- Core Exit T/Cs are not available
- The Reactor Coolant System is close to saturation.

What is the MINIMUM amount of makeup flow required to prevent boiling in the Reactor Coolant System?

Reference Provided

A. 600 GPM.

B. 660 GPM

C. 720 GPM

D. 792 GPM

Bank Question: 1163 **Answer: B**

1 Pt. The following sequence of events has occurred on Unit 1:

- ~~The unit was tripped~~ the unit trips on 2/1/05 at 0100 per the shutdown procedure.
- The unit entered MODE 5 on 2/4/05 at 0100.
- ~~On 2/10/05 at 0100 the control~~ room entered AP/19 due to a loss of ND.
- The Reactor Coolant System is open to atmosphere.
- The FWST temperature is 80°F
- Core Exit T/Cs are not available
- The Reactor Coolant System is close to saturation.

What is the MINIMUM amount of makeup flow required to prevent boiling in the Reactor Coolant System?

Reference Provided
OP/1/A/6100/22
Enclosure 4.3, Section 2.10.4

A. 600 GPM.

B. 660 GPM

C. 720 GPM

D. 792 GPM

Distracter Analysis:.

A. Incorrect:
Plausible:
B. Correct:
C. Incorrect:
Plausible:
D. Incorrect
Plausible:

LEVEL: RO & SRO

KA: G2.4.9 (3.3/3.9)

SOURCE: BANK Braidwood 1 NRC Exam 1999

LEVEL OF KNOWLEDGE: Analysis

AUTHOR: CWS

LESSON: OP-MC-AP-AP19

OBJECTIVES: OP-MC-AP-AP19, obj 2

REFERENCES: AP19 Basis Document, page 16
Data Book Curve 2.10.4, page 1 & 2

2.4 Emergency Procedures /Plan (Continued)

2. [redacted] LOCA or loss [redacted] gies.
(CFR: 41.10 / 43.5 / 45.13)
IMPORTANCE [redacted] 3.9

2.4.10 **Knowledge of annunciator response procedures.**
(CFR: 41.10 / 43.5 / 45.13)
IMPORTANCE RO 3.0 SRO 3.1

2.4.11 **Knowledge of abnormal condition procedures.**
(CFR: 41.10 / 43.5 / 45.13)
IMPORTANCE RO 3.4 SRO 3.6

2.4.12 **Knowledge of general operating crew responsibilities during emergency operations.**
(CFR: 41.10 / 45.12)
IMPORTANCE RO 3.4 SRO 3.9

2.4.13 **Knowledge of crew roles and responsibilities during EOP flowchart use.**
(CFR: 41.10 / 45.12)
IMPORTANCE RO 3.3 SRO 3.9

2.4.14 **Knowledge of general guidelines for EOP flowchart use.**
(CFR: 41.10 / 45.13)
IMPORTANCE RO 3.0 SRO 3.9

2.4.15 **Knowledge of communications procedures associated with EOP implementation.**
(CFR: 41.10 / 45.13)
IMPORTANCE RO 3.0 SRO 3.5

2.4.16 **Knowledge of EOP implementation hierarchy and coordination with other support procedures.**
(CFR: 41.10 / 43.5 / 45.13)
IMPORTANCE RO 3.0 SRO 4.0

2.4.17 **Knowledge of EOP terms and definitions.**
(CFR: 41.10 / 45.13)
IMPORTANCE RO 3.1 SRO 3.8

CLASSROOM TIME (Hours)

NLO	NLOR	LPRO	LPSO	LOR
		1.0	1.0	1.0

OBJECTIVES

	OBJECTIVE	NLO	NLOR	LPRO	LPSO	LOR
1	Concerning AP/1(2)/5500/19 (Loss of ND OR ND SYSTEM LEAKAGE): • State the purpose of the AP • Recognize the symptoms that would require implementation of the AP. AP19001			X	X	X
2	Given scenarios describing accident events and plant conditions, evaluate the basis for any caution, note, or step. AP19002			X	X	X

STEP 20 CAUTION 2:

PURPOSE:

Inform the Operator that boiling and the potentially high amount of feed added in this step could make NC level indication erroneous. If sufficient level is added to spill over into the reference leg of the WR and NR System level indication, the D/P will go away, making them invalid. Subsequent checks for NC level should consider this.

DISCUSSION:

STEP 20:

PURPOSE:

To establish "feed & bleed" decay heat removal to prevent NC System boiling, in the absence of ND cooling and secondary heat sink.

DISCUSSION:

ND cooling or secondary heat removal would be preferred over "feed & bleed". However, if this point in the procedure is reached, these other heat removal methods are not effective (for whatever reason) and so "feed & bleed" is required. The ability to quickly reestablish ND cooling was checked earlier in the procedure. An earlier step also checked for the U Tubes loop seal broken. If not, direction was given to proceed to the steps establishing secondary heat sink.

This step is not for inventory control. It establishes sufficient makeup flow rate through the NC system (and the core) so that the relatively cool makeup flow removes heat as it flows through the core and out the vent path. It's obvious any S/G primary manway removed or the reactor head lifted is a sufficient vent path. However, as detailed in MNS Justification for T.S.3.4.9.3 amendment (162 for Unit 1 & 144 for Unit 2) two PORVs open or Pzr Safety removed provides adequate vent path for two SI pumps.

If core exit T/Cs are available, direction is given to makeup at a rate to maintain < 200°F. This is considerably more flow than would be required to makeup for inventory loss during boil off, since the water is not picking up latent heat of vaporization. Maintaining inventory during boil-off may keep the core covered. However, preventing boiling is a conservative approach since it eliminates the possibility of undetected inventory reduction for certain scenarios where steam pressure may build. Data Book curve 2.10.4 can provide a calculated amount of flow necessary for this, but since the objective is to maintain < 200°F, makeup flow is adjusted based on core exit T/Cs.

If core exit T/Cs are not available, direction is given to establish a flowrate of 1.1 times the value of Data Book curve 2.10.4. The Data book curve is based on sufficient makeup flow if makeup

UNIT 1

OP/1/A/6100/22
ENCLOSURE 4.3
SECTION 2.10.4

Core Flow Required to Prevent Boiling for Loss of Decay Heat Removal

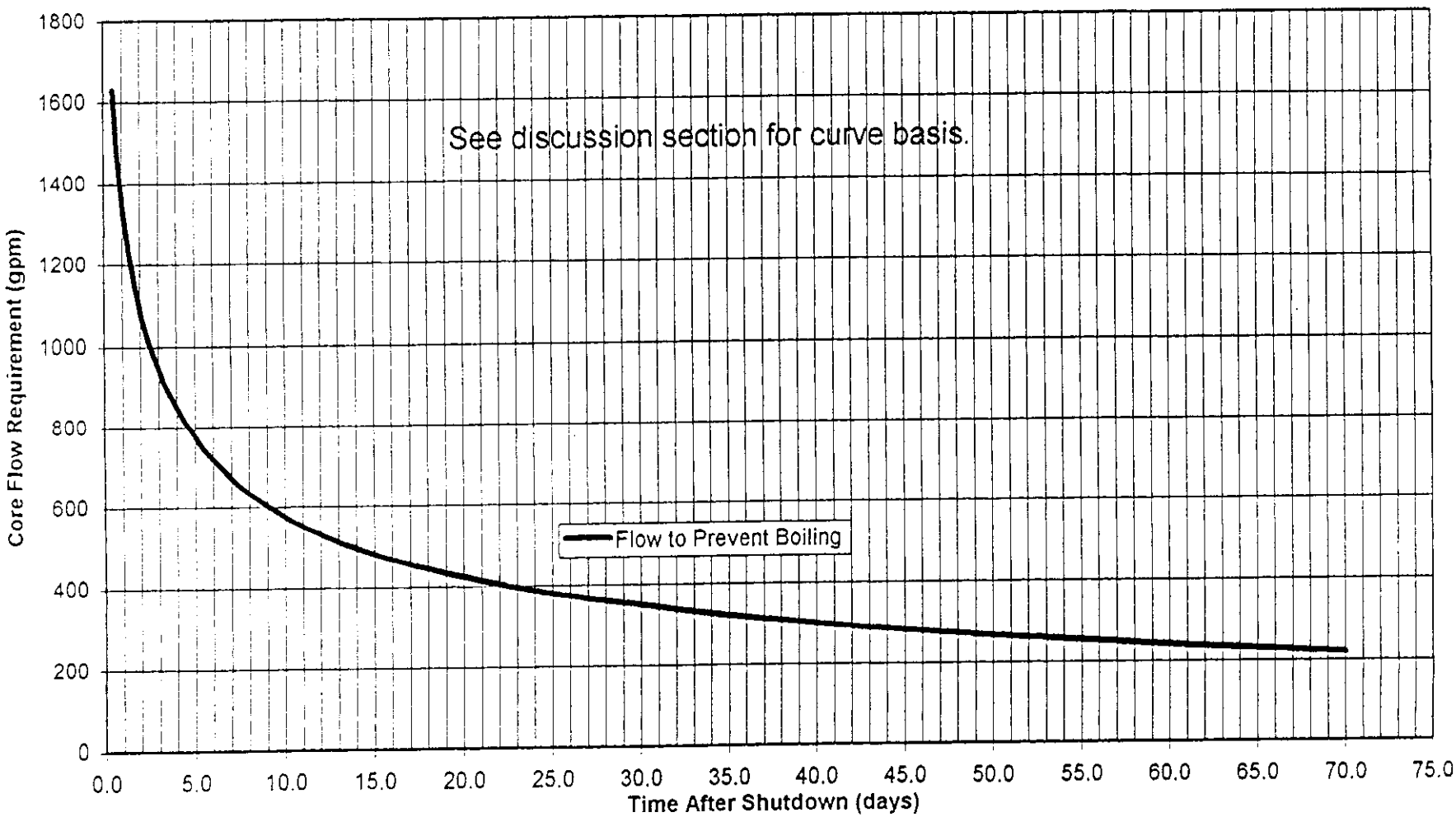

Detailed Discussion of Development and Application of Section 2.10.4

Section 2.10.4 contains a graph of Core Flow Required to Prevent Boiling for Loss of Decay Heat Removal. The supporting calculations for this graph are in DPC-1552.08-00-0143, *Upper Internals Spray Nozzle Flow Capability During A Loss of Decay Heat Removal Event*. Detailed calculations to determine the point at which required core flow to prevent boiling can be met by the circulation available through the upper internal nozzles have not been developed.

Therefore, the thermal margin values in 2.10.2 are non-conservative when the upper internals are installed, and thus do not apply. For conservatism, anytime upper internals are installed, no credit can be taken for water level greater than 84", and the appropriate curves from Section 2.10.1 should be used.

The results presented in the thermal margin curves for section 2.10.1 are not affected by this analysis. However, the presence of the upper internals coupled with the heat loads at times near shutdown may lead to localized core voiding. If decay heat removal capability (forced flow) were lost, the limited flow past the upper internals nozzles (with the normal configuration of a vented RCS) could lead to rapid voiding in the top of the core even with water level above the upper internals. In addition, the core flow requirements for mitigation of core boiling are based on forced flow required to dissipate decay heat with no allowances for recovery of core volume. The flow requirement presented in the graph are valid for mitigation of boiling for a pre-refueling core. This information should be used in conjunction with 2.10.1 and 2.10.2 to ensure appropriate contingencies are planned to mitigate core boiling in the event of a loss of decay heat removal capability.

For AP/EP use:

1. *This curve specifically addresses the condition of a vented reactor coolant system.*
2. *The makeup flow to the NC system is assumed to be at 140 °F.*
3. *To ensure adequate makeup flow for inlet temperatures approaching saturation, multiply the flow requirements of this graph by 1.10.*
4. *This curve assumes atmospheric pressure, any application for RCS pressures > 14.7 psig could result in a non-conservative flowrate.*
5. *SAMG Calculation Aids requirements for makeup flow may also be helpful.*

References:

1. DPC-1552.08-00-0143, *Upper Internals Spray Nozzle Flow Capability During A Loss of Decay Heat Removal Event*
2. WOG DW-95-23

2.4.9..

6/7/1999

Braidwood 1

Exam Level R

Mark Question | Print Rec | New Searc | Exit

Question

Given the following conditions on Unit 1:

- CETCs indicate 100F
- RH cooling has been lost and attempts are being made to restore a RH pump
- The following is the timeline for Unit operation following a 300 day continuous run
  - 6/1/99, 1000 - Reactor shutdown. Cooldown initiated for maintenance outage
  - 6/4/99, 1300 - Entered MODE 5
  - 6/16/99, 2200 - Operating RH pumps tripped

What is the MINIMUM amount of makeup required to prevent boiling in the RCS?

Answer: 480 gpm

Distracter 1 40 gpm

Distracter 2 60 gpm

Distracter 3 340 gpm

Distracter Analysis:

Answer: Using Figure PRI 10-3 to determine the amount of makeup required to prevent boiling at 15.5 days after shutdown. The value form the curve provides approximately 480 gpm. If the curve for flow required to match boiloff is used, the value is 60 gpm. If the curve is used for conditions following refueling the flow to prevent boiling is 340 gpm and the flow to match boiloff is 40 gpm. The premise states that the cooldown was for a maintenance outage.

Distracter 1:

Distracter 2:

Distracter 3:

..WE04G2.4.9.1 3/14/2003

Surry 1 **Exam Level** R

@ Mark Question | Print Recor | New Searc | Exit

Question

-Unit 1 has experienced a SBLOCA.
-The team has entered and is performing actions in ECA-1.2, "LOCA Outside Containment."
-The operators are directed to close/verify closed SI-MOV-1890A, SI-MOV-1890B, and SI-MOV-1890C.
-RCS pressure continues to fall.

Which one of the following describes what actions should be performed next?

Answer: Re-open SI-MOV-1890C, then transition to ECA-1.1, "Loss of Emergency Coolant Recirculation."

Distracter 1 Re-open SI-MOV-1890A and B, then transition to E-1, "Loss of Reactor or Secondary Coolant."

Distracter 2 Re-open SI-MOV-1890A and B, then transition to ECA-1.1, "Loss of Emergency Coolant Recirculation."

Distracter 3 Re-open SI-MOV-1890C, then transition to E-1, "Loss of Reactor or Secondary Coolant."

Distracter Analysis:

Answer: B. Correct, the procedure directs the operator to open SI-MOV 1890C to provide a flow path, and the correct transition is to ECA-1.1.

Distracter 1: A. Incorrect, SI-MOV 1890A and B are not reopend, and with pressure still decreasing the correct transition is to ECA 1.1.

Distracter 2: C. Incorrect, SI-MOV 1890A and B are not reopend.

Distracter 3: D. Incorrect, the procedure directs the operator to open SI-MOV 1890C to provide a flow path, but the correct transition is to ECA-1.1.

1 Pt. Per OMP 2-2 (Conduct Of Operations) which of the following alarms **DO NOT** require 3 Way communications between the RO and the CRSRO?

A. OAC "above the bar" computer alarm

B. OAC "below the bar" computer alarm

C. "Unexpected" Annunciator alarm

D. "Expected" Annunciator alarm

Bank Question: 1164 **Answer: A**

1 Pt. Per OMP 2-2 (Conduct Of Operations) which of the following alarms **DO NOT** require 3 Way communications between the RO and the CRSRO?

A. OAC "above the bar" computer alarm

B. OAC "below the bar" computer alarm

C. "Unexpected" Annunciator alarm

D. "Expected" Annunciator alarm

Distracter Analysis:.

A. **Correct**:
B. **Incorrect**: Below the bar OAC alarms are handled just like annunciator alarms
Plausible:
C. **Incorrect**: Per OMP, unexpected alarms require repeat back.
Plausible:
D. **Incorrect** Until the CRSRO decides the alarm is a nuisance, repeat back is required.
Plausible:

LEVEL: RO & SRO

KA: G 2.4.10. (3.0/3.1)

SOURCE: NEW

LEVEL OF KNOWLEDGE: Memory

AUTHOR: CWS

LESSON: OP-MC-ADM-OMP

OBJECTIVES: OP-MC-ADM-OMP, obj 3

REFERENCES: OMP 2-2 pg. 25 & 26

2.4 Emergency Procedures /Plan (Continued)

2.4.9 **Knowledge of low power / shutdown implications in accident (e.g. LOCA or loss of RHR) mitigation strategies.**
(CFR: 41.10 / 43.5 / 45.13)
IMPORTANCE RO 3.3 SRO 3.9

2.4.10 **Knowledge of annunciator response procedures.**
(CFR: 41.10 / 43.5 / 45.13)
IMPORTANCE RO 3.0 SRO 3.1

2.4.11 **Knowledge of abnormal condition procedures.**
(CFR: 41.10 / 43.5 / 45.13)
IMPORTANCE RO 3.4 SRO 3.6

2.4.12 **Knowledge of general operating crew responsibilities during emergency operations.**
(CFR: 41.10 / 45.12)
IMPORTANCE RO 3.4 SRO 3.9

2.4.13 **Knowledge of crew roles and responsibilities during EOP flowchart use.**
(CFR: 41.10 / 45.12)
IMPORTANCE RO 3.3 SRO 3.9

2.4.14 **Knowledge of general guidelines for EOP flowchart use.**
(CFR: 41.10 / 45.13)
IMPORTANCE RO 3.0 SRO 3.9

2.4.15 **Knowledge of communications procedures associated with EOP implementation.**
(CFR: 41.10 / 45.13)
IMPORTANCE RO 3.0 SRO 3.5

2.4.16 **Knowledge of EOP implementation hierarchy and coordination with other support procedures.**
(CFR: 41.10 / 43.5 / 45.13)
IMPORTANCE RO 3.0 SRO 4.0

2.4.17 **Knowledge of EOP terms and definitions.**
(CFR: 41.10 / 45.13)
IMPORTANCE RO 3.1 SRO 3.8

CLASSROOM TIME (Hours)

NLO	NLOR	LPRO	LPSO	LOR
2	2	3	3	3

OBJECTIVES

	OBJECTIVE	NLO	NLOR	LPRO	LPSO	LOR
1	Given OMP 1-1, Administration of Operations Management Procedures: • State the person responsible for Approval of OMP's. • State the responsibility of the OMP Owner. • State the persons accountable for compliance with the requirements of OMP's • State who can approve the deletion of an OMP. ADMOMP001	X	X	X	X	X
2	Given OMP 1-2, Operation's Change Management Process. • Discuss the purpose for this OMP ADMOMP029	X	X	X	X	X
3	Concerning OMP 2-2, Conduct of Operations. • Discuss the responsibilities of the following personnel: 1. Superintendent of Operations. 2. Shift Operations Manager 3. Shift Technical Advisor 4. Operations Shift Manager 5. Shift Supervisor 6. Reactor Operator 7. Operations Test Group • Define the term "Nuclear Control Operator" • Define the term "Controls" • Define Reactivity Changes that need to be communicated to the SRO ADMOMP002	X	X	X	X	X
4.	Concerning OMP 2-3, OPS Work Process Managers Group Responsibilities. • Discuss Roles and Responsibilities of Group ADMOMP030	X	X	X	X	X

3.6 **Annunciator Response:**

Control Room Alarms will be categorized as **Expected Alarms, Unexpected Alarms** or **Nuisance Alarms** for the purpose of identification and response. The following guidance applies to all control room annunciators.

OAC Alarms : Reactor Operators are responsible for monitoring non priority (above the line) OAC alarms and reviewing OAC alarm responses associated with these alarms when appropriate. The ROs are responsible for determining if non priority OAC alarms need to be brought to the attention of the rest of the crew.

Priority (below the line) OAC alarms shall be handled per the standard for annunciators.

Expected Alarms : Planned activities and associated alarms have been pre-identified prior to initiation of actions that generate the alarm. The identification method could be via Pre-Job Briefings, Procedures, Personnel Knowledge or past experience. The control room Staff will have received prior notification for these alarms. Reference to the associated alarm response procedure is **NOT** required when expected alarms are identified to the Control Room crew prior to the activity being performed.

Unexpected Alarms : Unexpected alarms are generated by unknown evolutions or plant conditions. The Control Room Staff has **NOT** pre-identified or been pre-informed of the alarms.

Nuisance Alarms : Nuisance Alarms have been previously announced and evaluated. These alarms occur frequently due to planned testing or reasons already communicated and require no action. The CR SRO may direct the NCO to acknowledge the alarm without announcing it.

Alarm Response Guidelines:

- During normal operations all annunciators which alarm should be identified using animated star. Three way communications shall be used.
- **WHEN** the NCO acknowledges an **Unexpected Alarm,** the noun name of the alarm should be announced. The SRO should repeat back (or paraphrase) the noun name of the alarm. The SRO is responsible to ensure that the other NCO on the unit is aware of significant **Unexpected Alarms**.
- **Upon** first receipt of an **Unexpected Alarm,** an NCO or SRO shall review the annunciator/alarm response procedure and implement the required actions as applicable.
- **WHEN** the NCO acknowledges an **Expected Alarm,** either the name of the alarm or the activity causing multiple alarms should be announced to the SRO stating that it is expected. The SRO repeats back for the alarm and the NCO completes the third leg of the communication.