Draft Submittal

MCGUIRE FEB 2005 EXAM
50-369 & 370/2005-301

FEBRUARY 7 - 15, 2005
FEBRUARY 18, 2005 (written)

1. Senior Reactor Operator Written Exam

1 Pt(s) Given the following conditions on Unit 1:

- Mode 4
- Cold Leg Accumulators are isolated
- In process of cooling down and depressurizing the NC System
- 1NC-1 (Pressurizer Code Safety Valve) begins to leak
- NC Pressure is slowly going down
- PRT level and pressure are going up
- Containment Pressure is .15 psig and stable

Which one of the following describes the proper procedures to mitigate the above?

A. Enter AP/35 (ECCS Actuation during Plant Shutdown) and then go to E-0 (Reactor Trip or Safety Injection).

B. Enter AP/10 (NC System Leakage within the capacity of both NV pumps) and then go to AP/35.

C. Enter AP/10 then go to AP/34 (Shutdown LOCA).

D. Enter AP/34 and then go to E-0

Bank Question: 1165 ***Answer: C***

1 Pt(s) Given the following conditions on Unit 1:

- Mode 4
- Cold Leg Accumulators are isolated
- In process of cooling down and depressurizing the NC System
- 1NC-1 (Pressurizer Code Safety Valve) begins to leak
- NC Pressure is slowly going down
- PRT level and pressure are going up
- Containment Pressure is .15 psig and stable

Which one of the following describes the proper procedures to mitigate the above?

A. Enter AP/35 (ECCS Actuation during Plant Shutdown) and then go to E-0 (Reactor Trip or Safety Injection).

B. Enter AP/10 (NC System Leakage within the capacity of both NV pumps) and then go to AP/35.

C. Enter AP/10 then go to AP/34 (Shutdown LOCA).

D. Enter AP/34 and then go to E-0

Distracter Analysis:

A. **Incorrect**: No Safety Injection signal present, therefore you do not go to AP/35 and E-0.
Plausible:

B. **Incorrect**: AP/10 will not direct the crew to AP/35
Plausible:

C. **Correct**:

D. **Incorrect**: AP/34 is correct but due to initial plant conditions E-0 will not be implemented
Plausible:

LEVEL: SRO Only. SRO determines procedure flow paths based on current plant conditions and symptoms observed.

KA: 00008 G 2.4.5 (2.9/3.6)

SOURCE: NEW

LEVEL OF KNOWLEDGE: ANALYSIS

AUTHOR: CWS

LESSON: - AP/1/5500/34 Background Document

OBJECTIVES: OP-MC-AP-34 Obj. 2

REFERENCES: AP/1/5500/34 Background Document pages 7

2.4 Emergency Procedures /Plan

2.4.1 **Knowledge of EOP entry conditions and immediate action steps.**
(CFR: 41.10 / 43.5 / 45.13)
IMPORTANCE RO 4.3 SRO 4.6

2.4.2 **Knowledge of system set points, interlocks and automatic actions associated with EOP entry conditions.**
(CFR: 41.7 / 45.7 / 45.8)
Note: The issue of setpoints and automatic safety features is not specifically covered in the systems sections).
IMPORTANCE RO 3.9 SRO 4.1

2.4.3 **Ability to identify post-accident instrumentation.**
(CFR: 41.6 / 45.4)
IMPORTANCE RO 3.5 SRO 3.8

2.4.4 **Ability to recognize abnormal indications for system operating parameters which are entry-level conditions for emergency and abnormal operating procedures.**
(CFR 41.10 / 43.2 / 45.6)
IMPORTANCE RO 4.0 SRO 4.3

2.4.5 **Knowledge of the organization of the operating procedures network for normal, abnormal, and emergency evolutions.**
(CFR: 41.10 / 43.5 / 45.13)
IMPORTANCE RO 2.9 SRO 3.6

2.4.6 **Knowledge symptom based EOP mitigation strategies.**
(CFR: 41.10 / 43.5 / 45.13)
IMPORTANCE RO 3.1 SRO 4.0

2.4.7 **Knowledge of event based EOP mitigation strategies.**
(CFR: 41.10 / 43.5 / 45.13)
IMPORTANCE RO 3.1 SRO 3.8

2.4.8 **Knowledge of how the event-based emergency/abnormal operating procedures are used in conjunction with the symptom-based EOPs.**
(CFR: 41.10 / 43.5 / 45.13)
IMPORTANCE RO 3.0 SRO 3.7

CLASSROOM TIME (Hours)

NLO	NLOR	LPRO	LPSO	LOR
		1.5	1.5	1.5

OBJECTIVES

	OBJECTIVE	NLO	NLOR	LPRO	LPSO	LOR
1	Concerning AP/1(2)/5500/34 (Shutdown LOCA): • State the purpose of the AP • Recognize the symptoms that would require implementation of the AP. AP34001			X	X	X
2	Given scenarios describing accident events and plant conditions, evaluate the basis for any caution, note, or step. AP34002			X	X	X

STEP 6:

PURPOSE:

To determine if NC System inventory losses can be replenished with normal charging flow or if safety injection flow is necessary.

DISCUSSION:

A check is first made if NI-9 & 10 are closed. If not, then the leakage is already known to be larger than the capacity of normal charging, and direction is given to bypass the rest of this step.

If the leak flowrate is low enough that it is within the normal capacity of the charging system, then this AP can be terminated and direction is given to go to AP/10. The maximum capacity of normal charging is considered to be 175 gpm. This is based on letdown isolated (done by a previous step) and charging up to the limit of 144 gpm through the regenerative HX. Add in the 32 gpm seal injection flow and the total is 175 gpm (approximately, disregards seal leakoff).

The flowrate above is typically capable of compensating for a 3/8" break at normal operating temperature and pressure. Breaks greater than this size are generally considered to be LOCAs rather than NC leaks. Since the basis of this AP is to provide operator actions for plant cooldown and recovery with high flowrates, breaks considered LOCAs are best handled within the framework of this AP rather than other procedures.

To determine if normal charging is sufficient, Pzr level and subcooling are checked. The basis of the Pzr level setpoint of 11% (just on scale) and subcooling are documented in a previous step. If these can be maintained with normal charging, then SI pumps and the rest of this AP are not required. If not, the AP is continued, starting with aligning charging through the S/I flowpath in the next step.

STEP 7:

PURPOSE:

Alert plant personnel of LOCA.

DISCUSSION:

Plant pages of abnormal conditions can have two benefits. One is alerting any personnel that actions they have taken could have led to the abnormal condition (with the expectation that they contact the CR). The other is alerting personnel to help with the abnormal condition (STA to the control room, NLOs mobilized, etc.).

1 Pt. Unit 1 is operating at 100% power when the following indications are noted in the control room:

- Pzr. Level is 53% and going down slowly
- CHARGING LINE ABNORMAL FLOW alarm
- NC PUMP SEAL INJ LOW FLOW alarm
- REGEN HX LETDN HI TEMP alarm
- LETDOWN HX OUTLET HI TEMP alarm

delete?

ADD EMF Alarms

~~Resoff~~ Bold at

Which one of the following identifies the most probable reason ~~for~~ these indications and the long term operational concern if the problem is not corrected?

A. Loss of Charging.
Reactor coolant system activity and chemistry concerns

B. Loss of Letdown.
Reactor coolant system activity and chemistry concerns

C. Loss of Charging.
Over heating of the Reactor Coolant Pump seals

D. Loss of Letdown
Unfiltered water supplied to reactor coolant pump seals

Need to add ~~B~~ assessment

Need indication ~~Reason~~ for leak

Change All to

A, C – charger header leak upstream of INV-241 seal inj control valve

B, D – letdown leak immediately downstream of LD HX.

Bank Question: 1166 ***Answer: A***

1 Pt. Unit 1 is operating at 100% power when the following indications are noted in the control room:

- Pzr. Level is 53% and going down slowly
- CHARGING LINE ABNORMAL FLOW alarm
- NC PUMP SEAL INJ LOW FLOW alarm
- REGEN HX LETDN HI TEMP alarm
- LETDOWN HX OUTLET HI TEMP alarm

Which one of the following identifies the most probable reason for these indications and the long term operational concern if the problem is not corrected?

A. **Loss of Charging.**
Reactor coolant system activity and chemistry concerns

B. **Loss of Letdown.**
Reactor coolant system activity and chemistry concerns

C. **Loss of Charging.**
Over heating of the Reactor Coolant Pump seals

D. **Loss of Letdown**
Unfiltered water supplied to reactor coolant pump seals

Distracter Analysis: This question requires the student to understand that when charging is isolated, letdown will also be isolated. Excess letdown will be placed in service and excess letdown is not filtered via the demineralizer as normal letdown.

A. **Correct**: per the AP/10 guidance due to excess letdown not being filtered or demineralized

B. **Incorrect**: : if the student thinks that symptoms are due to loss of letdown.
Plausible loss of letdown will result in Reactor Coolant System activity and chemistry concerns.

C. **Incorrect**: No loss of charging event should result in loss of seal cooling as long as thermal barrier is available.
Plausible: if student thinks Reactor Coolant Pump seals lose coolant due to loss of charging.

D. **Incorrect**: : if the student thinks that symptoms are due to loss of letdown. Seal injection filters would still filter seal supply.
Plausible: loss of letdown requires excess letdown which does supply the VCT with unfiltered water.

Level: SRO Only

KA: APE 000022 AA2.01 (3.2/3.8)

Lesson Plan Objective: OP-MC-PS-NV Obj. 5
OP-MC-AP-10 Obj 2

Source: NEW

Level of knowledge: Comprehension

References:

1. OP-MC-PS-NV pages 41 and 119
2. OP-MC-AP-10 pages 46 and 47
3. OP/1/A/5500/10 pages 46 and 47
4. OP/1/A/5000/G-1 Enclosure 2 page 4

APE: 022 **Loss of Reactor Coolant Makeup**

ABILITY

AA1. **Ability to operate and / or monitor the following as they apply to the Loss of Reactor Coolant Pump Makeup: (CFR 41.7 / 45.5 / 45.6)**

AA1.01	CVCS letdown and charging	3.4	3.3
AA1.02	CVCS charging low flow alarm, sensor, and indicator	3.0	2.9
AA1.03	PZR level trend	3.2	3.2
AA1.04	Speed demand controller and running indicators (positive displacement pump)	3.3	3.2*
AA1.05	RCP seal back pressure regulator valves and flow indicators	2.9*	2.8*
AA1.06	CVCS charging pump ammeters and running indicators	2.9	2.7
AA1.07	Excess letdown containment isolation valve switches and indicators	2.8*	2.7*
AA1.08	VCT level	3.4	3.3
AA1.09	RCP seal flows, temperatures, pressures, and vibrations	3.2	3.3

AA2. **Ability to determine and interpret the following as they apply to the Loss of Reactor Coolant Pump Makeup: (CFR: 43.5 / 45.13)**

AA2.01	Whether charging line leak exists	3.2	3.8
AA2.02	Charging pump problems	3.2	3.7
AA2.03	Failures of flow control valve or controller	3.1	3.6
AA2.04	How long PZR level can be maintained within limits	2.9	3.8

CLASSROOM TIME (Hours)

NLO	NLOR	LPRO	LPSO	LOR
		1.0	1.0	1.0

OBJECTIVES

	OBJECTIVE	NLO	NLOR	LPRO	LPSO	LOR
1	Concerning AP/1/A/5500/10 (NC System Leakage Within the Capacity of Both NV Pumps): • State the purpose of the AP • Recognize the symptoms that would require implementation of the AP. AP1001			X	X	X
2	Given scenarios describing accident events and plant conditions, evaluate the basis for any caution, note, or step. AP1002			X	X	X

SEQ	OBJECTIVE	NLO	NLOR	LPRO	LPSO	LOR
5	Explain the basic operation of the NV System for the following: • Normal L.D. Purification • Seal Injection Flow • Chemical Addition • Charging • Centrifugal Charging Pumps • All Modes of Makeup • PD Pump Control • Safeguards Actuation • Charging/Letdown Flow Balance • Excess Letdown • Emergency Boration • Pressurizer Spray	X	X	X	X	
6	Describe the various system parameters indicated in the Control Room associated with the NV System in ALL modes of operation.		X	X	X	X
7	List the "fail" position of NV valves on loss of power or air.		X	X	X	X
8	Describe the as-built configuration of the VCT level instrumentation.	X	X	X	X	
9	Using fundamental instrumentation knowledge and given specific reference and variable leg configurations for the Volume Control Tank, predict the effect on indicated versus actual level for various failures.	X	X	X	X	

Leakage past the No. 1 seal supplies the No. 2 seal with water. The pressure on the No. 2 seal is the summation of the flow resistances in the seal water return lines and the VCT pressure. Approximately 3 gph will pass through the No. 2 seal. A standpipe is provided to ensure a back pressure of at least 7 feet of water on the No. 2 seal and warn of excessive No. 2 seal leakage. The first outlet from the standpipe has an orifice to permit normal No. 2 seal leakage to flow to the Reactor Coolant Drain Tank (NCDT); excessive No. 2 leakage results in a rise in standpipe level and, eventually, overflow to the NCDT via a second overflow connection.

No. 1 seal bypass flow can be used during NCS pressure between 100# and 1000#. This ensures an adequate flow to cool the radial bearing during low seal flow conditions.

NOTE: There are other parameters that must be met prior to the bypass of the No. 1 seal. Refer to OP-MC-PS-NCP, Reactor Coolant Pump and Motor (NCP) lesson plan.

The seal water return flow then goes through the containment isolation valves (NV-94AC, inside containment, & NV-95B, outside containment). These valves will automatically close on a Phase "A" Containment Isolation (S_I). The inside containment isolation valve, NV-94AC, can also be controlled from the SSF. A relief valve, NV-96, relieves trapped pressure from the containment penetration back to the upstream side of NV-94AC. The seal return line, inside containment, is protected from overpressure by a relief valve, NV-93, when the line is isolated. The setpoint is 150 psig and the valve relieves to the PRT. The flow then enters the seal water return filter, which collects particulates. In addition to the seal return flow, the excess letdown flow also goes through the seal return filter.

The filter is designed for maximum seal leakage flow and excess letdown flow. This combined flow now enters the tube side of the seal water heat exchanger along with the CCP recirculation mini-flow. The seal water heat exchanger is cooled by Component Cooling (KC) water circulated through shell side of the heat exchanger.

2.17 Excess Letdown

Objective # 5

Excess letdown is provided in the event that normal letdown is unavailable, to help maintain a constant NC inventory / PZR level. The flow comes from the NC Loop C Cold Leg through NV-24B and NV-25B, which can also be controlled from the ASP. The flow then goes through the excess letdown heat exchanger and then through NV-26. A manual loader, for flow control, controls NV-26, which can also be controlled from the ASP. NCS flow is through the tube side (outlet temperature ≈ 165°F) and Component Cooling (KC) water flows through the shell side. The excess letdown discharges to NV-27B, which controls the flow path to be taken, either the NCDT or the seal return to the VCT (normal flow path). NV-27B is controlled from the Control Room and will fail to the VCT position on Loss of Air.

The excess letdown flow of ≈ 20 gpm provides the capability to letdown the seal injection flow entering the NCS of ≈ 5 gpm per pump (≈ 20 gpm).

7.0 DRAWINGS

7.1 NV System Composite (1/28/03)

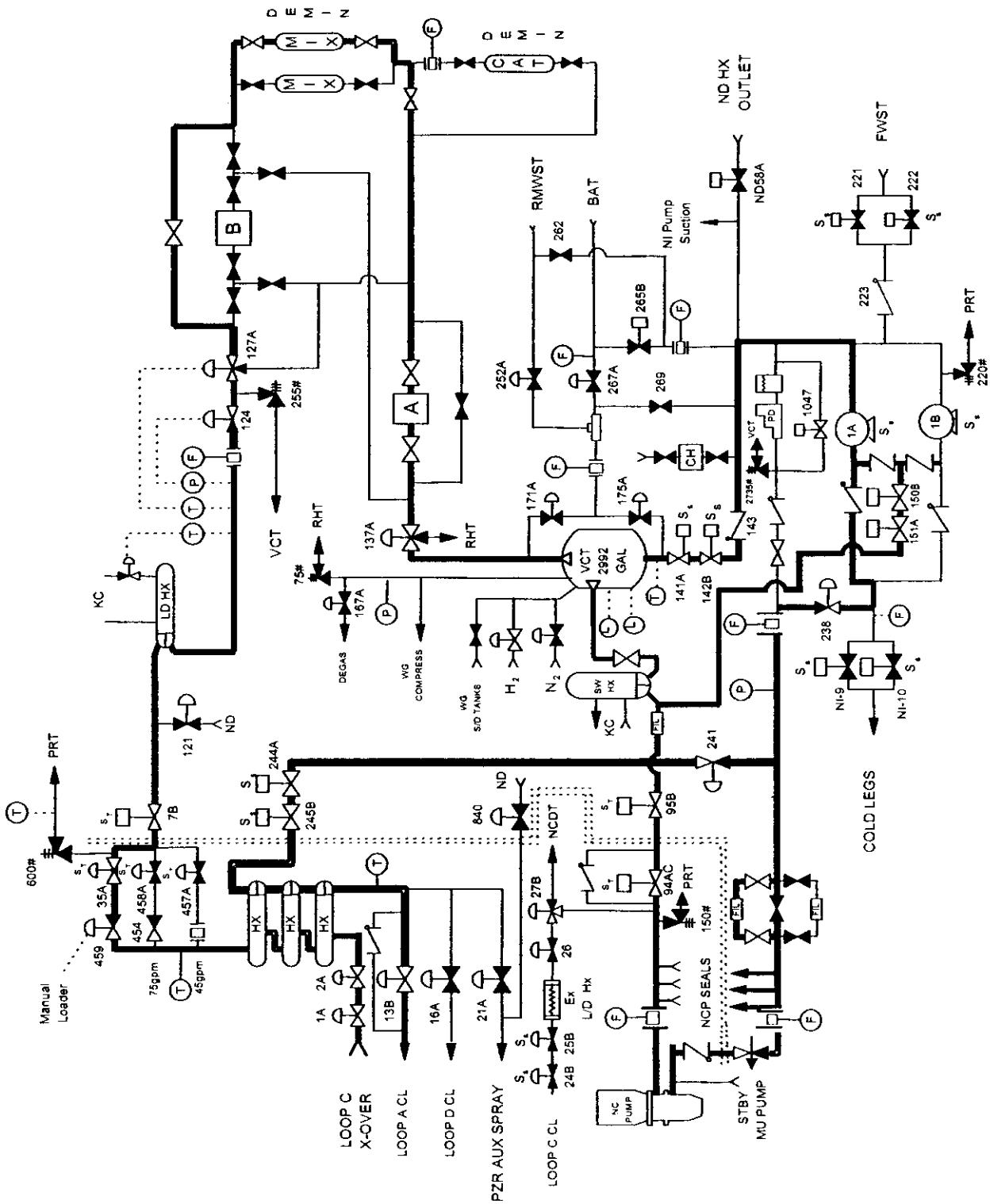

ACTION/EXPECTED RESPONSE	RESPONSE NOT OBTAINED
__ 22. **Check leak - KNOWN TO BE ON NORMAL CHARGING LINE DOWNSTREAM OF 1NV-244A (Charging Line Cont Outside Isol).**	__ **GO TO Step 24.**
23. **Isolate leak as follows:**	
a. Close letdown isolation valves:	
__ 1) 1NV-458A (75 GPM L/D Orifice Outlet Cont Isol).	
__ 2) 1NV-457A (45 GPM L/D Orifice Outlet Cont Isol).	
__ 3) 1NV-35A (Variable L/D Orifice Outlet Cont Isol).	
__ 4) 1NV-1A (NC L/D Isol To Regen Hx).	
__ 5) 1NV-2A (NC L/D Isol To Regen Hx).	
b. Isolate charging:	
1) Close the following valves:	
__ • 1NV-244A (Charging Line Cont Outside Isol)	
__ • 1NV-245B (Charging Line Cont Outside Isol).	
__ 2) Manually throttle 1NV-238 (Charging Line Flow Control) to maintain 6-10 GPM seal injection flow per NC pump.	
__ c. Check leak - ISOLATED.	c. Perform the following:
	__ 1) Evaluate placing charging and normal letdown in service PER AP/1/A/5500/12 (Loss Of Letdown, Charging Or Seal Injection).
	__ 2) GO TO Step 24.

ACTION/EXPECTED RESPONSE	RESPONSE NOT OBTAINED

23. (Continued)

__ d. Establish excess letdown **PER** EP/1/A/5000/G-1 (Generic Enclosures),Enclosure 2 (Establishing Excess Letdown).

__ e. Power operation may continue as long as NC System activity and chemistry requirements are met.

__ f. **GO TO** Step 29.

ACTION/EXPECTED RESPONSE	RESPONSE NOT OBTAINED
NOTE Opening and then closing 1NV-26 (Excess L/D Hx Outlet Cntrl) in the next steps will reduce the possibility of water hammer by ensuring that the excess letdown line is filled with water.	
__ 3. **Open 1NV-26 (Excess L/D Hx Outlet Cntrl).**	
__ 4. **Wait 2 minutes.**	
__ 5. **Close 1NV-26 (Excess L/D Hx Outlet Cntrl).**	
6. **Check the following valves - OPEN:**	__ **Observe Note prior to Step 13 and GO TO Step 13.**
__ • 1NV-94AC (NC Pumps Seal Ret Cont Inside Isol)	
__ • 1NV-95B (NC Pumps Seal Ret Cont Outside Isol).	
__ 7. **Open 1NV-24B (C NC Loop To Exs L/D Hx Isol).**	
__ 8. **Open 1NV-25B (C NC Loop To Exs L/D Hx Isol).**	
__ 9. **Slowly open 1NV-26 (Excess L/D Hx Outlet Cntrl) while maintaining Excess letdown HX temperature less than 200° F.**	
__ 10. **Notify Chemistry that excess letdown is in service.**	
__ 11. **WHEN time allows, THEN notify engineering to document transients on letdown and charging.**	

Even if the leak is on the VCT it still may not need to be isolated immediately if it is a small leak. If time allows, it may be appropriate to plan a plant shutdown at a convenient time to minimize the operational impact. If the leak requires immediate isolation, direction is given to isolate the VCT per it's enclosure. Some considerations for isolation include S.L.C. leakage, VCT makeup exceeded, personnel hazard or equipment concerns.

If the Enclosure is performed the NV pump suction is swapped to the FWST. Turbine load is reduced to maintain T-ave because of the higher borated FWST water. The NC pump seal return isolations are closed (and then relieve to the PRT). The NV pump recircs are re-routed to the NV pump suctions (until this is done, VCT level and probably leakage are increasing). The VCT gas space is isolated. This is done with a caution to ensure the VCT is not put back in service without cover gas due to the potential for low gas pressure resulting in a loss of NPSH for the NV pumps.

REFERENCES:
SOER 97-1
PIP M98-0036 CA #28

CASE II STEP 23:

PURPOSE:

Flow path-controlling-step to bypass the next step that isolates the NV charging line if the leak is not known to be in this area.

DISCUSSION:

If the leak is known to be on the charging line, the next step is performed. How specific indications respond to a leak on the charging line depend on the leak location. For example a leak downstream of the Regen HX will cause letdown temperature to decrease. A leak downstream of the charging flow indication orifice will cause charging flow indication to increase.

CASE II STEP 24:

PURPOSE:

Isolate a NV charging line leak.

DISCUSSION:

Prior to isolating charging, letdown needs to be isolated to prevent elevated letdown Regen Hx temperatures. Then the charging line containment isolations are closed, isolating a potential

leak between the containment isolations and the NC System. Since charging to the loops is isolated, total charging needs to be reduced to maintain proper seal injection flow.

If this isolates the leak, excess letdown is established to maintain NC System inventory balance. Note this step will not isolate charging line leaks upstream of the containment isolations or on the seal injection lines.

CASE II STEP 25:

PURPOSE:

Isolate any potential leaks into the PRT.

DISCUSSION:

If indications of a leak into the PRT exist, the RNO attempts to isolate the leak. If a Pzr PORV isolation is closed, the associated drain isolation is also closed, since it bypasses the isolation valve and a leaking PORV would continue to leak with this valve open.

If the leak is not identified, direction is given to check inputs to PRT per the PT/1(2)/A/4150/001D (Identifying NC System Leakage). The PT has an enclosure that lists the valves with seat leakage to the PRT and a list of system relief valves to the PRT. The locations of the valves are listed in the enclosure and can be used to help determine the accessibility during plant operation.

REFERENCES:
PT/1(2)/A/4150/001D, Identifying NC System Leakage

CASE II STEP 26:

PURPOSE:

If NC leakage into a CLA is occurring, this step will attempt to isolate the leak and restore normal CLA level.

DISCUSSION:

The response to in-leakage into a CLA depends a lot on the in-leakage rate. If the rate is small enough to accommodate continued operation with draining the CLA, it may not need to be

Bank Question: 1166 ***Answer: A***

1 Pt. Given the following events and conditions on Unit 1:

- 1NV-245A has developed a body to bonnet leak of approximately 30 gpm
- INV-244B has been closed in response to the leak.

As Control Room SRO which one of the following is an operational concern for operating long term with charging isolated while the leak is repaired?

A. Reactor coolant system activity and chemistry concerns

B. Elevated reactor coolant pump seal temperatures

C. Boration of reactor coolant system requiring power reduction

D. Unfiltered water supplied to reactor coolant pump seals

Distracter Analysis:

A. Correct: .
B. Incorrect: .
Plausible:
C. Incorrect: .
Plausible: .
D. Incorrect:
Plausible: .

Level: SRO Only

KA: APE 062 AA2.02 (2.9/3.6)

Lesson Plan Objective: PSS-RN Obj 7

Source: McGuire Bank NRC Exam 2003

Level of knowledge: Comprehension

References:
1. OP-MC-PSS-RN pages 23, 41, 73, 85
2. OP-MC-PSS-KC page 39

1 Pt. Given the following events and conditions on Unit 1:

- 1NV-245B (Charging Line Containment Outside Isolation Valve) has developed a body to bonnet leak of approximately 30 gpm
- INV-244A (Charging Line Containment Outside Isolation Valve) has been closed in response to the leak.

As Control Room SRO which one of the following is an operational concern for operating long term with the above valves isolated while the leak is repaired?

A. Reactor coolant system activity and chemistry concerns

B. Elevated reactor coolant pump seal temperatures

C. Boration of reactor coolant system requiring power reduction

D. Unfiltered water supplied to reactor coolant pump seals

To George Hopper

Question 38
1 Pt

Unit 1 is operating at 100% power when the following indications are noted in the control room:

- Pzr level is 23% and decreasing slowly
- CHARGING LINE ABNORMAL FLOW alarm
- NC PUMP SEAL INJ LOW FLOW alarm
- REGEN HX LETDN HI TEMP alarm
- LETDN HX OUTLET HI TEMP alarm

Which ONE (1) of the following identifies the most probable reason for these indications?

A. Loss of letdown, due to 1NV-78 failing closed.

B. Loss of charging, due ~~[illegible]~~ Relief operating NV pump discharge failure.

C. Loss of seal injection, due clogging of seal injection filter.

D. Letdown 3-way divert valve (1NV-137A) fails to the RHT position

Question 39
1 Pt

The NV letdown heat exchanger is cooled by the ___(1)___ System, which regulates cooling water flow to maintain NV letdown temperature at approximately ___(2)___ °F.

Which ONE (1) of the following best completes the statement above?

A. (1) KC (2) 140°F

B. (1) RN (2) 125°F

C. (1) KC (2) 105°F

D. (1) RN (2) 110°F

2 choices for leak
&
2 choices for condition

Bank Question: 1166 ***Answer: A***

1 Pt. Given the following events and conditions on Unit 1:

- 1NV-245B (Charging Line Containment Outside Isolation Valve) has developed a body to bonnet leak of approximately 30 gpm
- INV-244A (Charging Line Containment Outside Isolation Valve) has been closed in response to the leak.

As Control Room SRO which one of the following is an operational concern for operating long term with the above valves isolated while the leak is repaired?

A. Reactor coolant system activity and chemistry concerns

B. Elevated reactor coolant pump seal temperatures

C. Boration of reactor coolant system requiring power reduction

D. Unfiltered water supplied to reactor coolant pump seals

Distracter Analysis: This question requires the student to understand that when charging is isolated, letdown will also be isolated. Excess letdown will be placed in service and excess letdown is not filtered via the demineralizer as normal letdown.

A. **Correct**: per the AP/10 guidance due to excess letdown not being filtered

B. **Incorrect**:
Plausible: if the student thinks that seal cooling now from the RCS through the thermal barrier heat exchanger

C. **Incorrect**:
Plausible: if student thinks standby makeup pump has been started in response to isolating the normal charging path

D. **Incorrect**:
Plausible: if student thinks standby makeup pump has been started in response to isolating the normal charging path

Level: SRO Only

KA: APE 000022 AA2.01 (3.2/3.8)

Lesson Plan Objective: OP-MC-PS-NV Obj. 5
OP-MC-AP-10 Obj 2

Source: NEW

1 Pt. Given the following events and conditions: Line up times/dates

- Unit 1 is at 100% normal power operation.
- 1A NS pump has been declared INOPERABLE as of 16:00 on 2/5/05.
- At 21:00 on 2/5/05 I&E informs Control Room that instrument 1NSLP 5510 is INOPERABLE.

What is the implication on continued plant operation?

Reference Provided

A. Restore 1A NS Pump to OPERABLE by 16:00 on 2/8/05.

B. Restore <u>either</u> 1A NS Pump or 1NSLP 5510 to OPERABLE by 0300 on 2/6/05 or be in MODE 3 by 0900 on 2/6/05.

C. Be in MODE 3 by 03:00 on 2/6/05.

D. Initiate plant shutdown within 1 hour and be in MODE 3 by 04:00 on 2/6/05.

Bank Question: 1167 ***Answer: D***

1 Pt. Given the following events and conditions:

- Unit 1 is at 100% normal power operation.
- 1A NS pump has been declared INOPERABLE as of 16:00 on 2/5/05.
- At 21:00 on 2/5/05 I&E informs Control Room that instrument 1NSLP 5510 is INOPERABLE.

What is the implication on continued plant operation?

Reference Provided
Tech Spec 3.3.2
Tech Spec 3.6.6
Tech Spec Ref Manual pg 14 of 28 in Section 2

A. Restore 1A NS Pump to OPERABLE by 16:00 on 2/8/05.

B. Restore <u>either</u> 1A NS Pump or 1NSLP 5510 to OPERABLE by 0300 on 2/6/05 or be in MODE 3 by 0900 on 2/6/05.

C. Be in MODE 3 by 03:00 on 2/6/05.

D. Initiate plant shutdown within 1 hour and be in MODE 3 by 04:00 on 2/6/05.

Distracter Analysis: Hinges on realizing 1NSLP5510 is the CPCS interlocking channel for 1B NS Pump, rendering it incapable of it's design function. This would results in making both trains NS INOPERABLE, and since the conditions of the NS Tech Spec don't accommodate both trains out, Tech Spec 3.0.3 applies.

A. **Incorrect**: both trains INOPERABLE require quicker response.
Plausible: If the candidate doesn't realize 1NSLP 5510 makes 1B NS INOPERABLE

B **Incorrect**: Action is required within 1 hour per T.S. 3.0.3
Plausible: If the candidate applies conditions per ESF Inst T.S. 3.3.2 requiring restoration within 6 or MODE 3 in 12 hours.

C. **Incorrect**: Action is required within 1 hour per T.S. 3.0.3
Plausible: If the candidate applies NS T.S. 3.6.6 condition B because condition A can't be met..

D. **Correct**:

Level: SRO Only. The SRO is responsible for using references to make Tech Spec OPERABLITLY determinations. The SRO will have to evaluate the effect of this one instrument on the ESF T.S. 3.3.2

concerning CPCS interlock channels. Since the T.S. list 4 channels/2 trains as required, it is not obvious this ONE channel makes the whole Train B INOPERABLE.

KA: APE 000026 A2.04 (3.9/4.2)

Lesson Plan Objective: OP-MC-ECC-NS, Obj. 6 & 13

Source: NEW

Level of knowledge: Analysis

References:

1. Tech Spec 3.6.6, Containment Spray System
2. Tech Spec 3.3.2, ESF Instrumentations
3. OP-MC-ECC-NS Lesson Plan, pg's 27 & 29

SYSTEM: **026 Containment Spray System (CSS)**

ABILITY

A1	**Ability to predict and/or monitor changes in parameters (to prevent exceeding design limits) associated with operating the CSS controls including:** (CFR: 41.5 / 45.5)		
A1.01	Containment pressure	3.9	4.2
A1.02	Containment temperature	3.6*	3.9
A1.03	Containment sump level	3.5	3.5
A1.04	Containment humidity	3.1	3.3
A1.05	Chemical additive tank level and concentration	3.1	3.4
A1.06	Containment spray pump cooling	2.7	3.0
A2	**Ability to (a) predict the impacts of the following malfunctions or operations on the CSS; and (b) based on those predictions, use procedures to correct, control, or mitigate the consequences of those malfunctions or operations:** (CFR: 41.5 / 43.5 / 45.3 / 45.13)		
A2.01	Reflux boiling pressure spike when first going on recirculation	2.7	3.0
A2.02	Failure of automatic recirculation transfer	4.2*	4.4*
A2.03	Failure of ESF	4.1	4.4
A2.04	Failure of spray pump	3.9	4.2
A2.05	Failure of chemical addition tanks to inject	3.7	4.1
A2.06	Increase in spray flow following swapover, because of higher pump suction pressure	2.2	2.6
A2.07	Loss of containment spray pump suction when in recirculation mode, possibly caused by clogged sump screen, pump inlet high temperature exceeded cavitation, voiding), or sump level below cutoff (interlock) limit	3.6	3.9
A2.08	Safe securing of containment spray when it can be done)	3.2	3.7
A2.09	Radiation hazard potential of BWST	2.5*	2.9*
A3	**Ability to monitor automatic operation of the CSS, including:** (CFR: 41.7 / 45.5)		
A3.01	Pump starts and correct MOV positioning	4.3	4.5
A3.02	Verification that cooling water is supplied to the containment spray heat exchanger	3.9*	4.2*

CLASSROOM TIME (Hours)

NLO	NLOR	LPRO	LPSO	LOR
1.0	1.0	1.0	1.0	1.0

OBJECTIVES

	Objective	NLO	NLOR	LPRO	LPSO	LOR
1	State the purpose of the Containment Spray (NS) System.	X	X	X	X	
2	Draw the NS System per Drawing 7.1 Containment Spray System, valve numbers and instrumentation not required.	X	X	X	X	
3	Describe the local indications and controls associated with the NS System.	X				
4	Describe the controls and indications associated with the NS System.		X	X	X	X
5	Describe the signals and permissives required to initiate the NS System.	X				
6	Describe the signals, setpoints, permissives, and logic required to initiate and reset NS System.		X	X	X	X
7	Describe the operation of the NS Pump room Air Handling Unit	X	X	X	X	X
8	Describe the NS System Operation (including automatic alignments).		X	X	X	X
9	Evaluate local plant parameters to determine any abnormal system conditions that may exist.	X				
10	Evaluate plant parameters and status indicators to determine any abnormal system conditions that may exist.		X	X	X	X
11	Given a limit and/or precaution associated with the NS System, discuss it's basis and applicability.	X	X	X	X	X
12	List the power supplies of the NS Pumps.	X	X	X	X	

OBJECTIVES

	Objective	NLO	NLOR	LPRO	LPSO	LOR
13	Concerning the Technical Specifications related to the NS System:					
	• Given the LCO title, state the LCO including the composition of a Containment Spray Train listed in the LCO section of Bases (including any COLR values) and applicability.			X X	X X	X X
	• For any LCO's that have action required within one hour, state the action.			X	X	X
	• Given a set of parameter values or system conditions, determine if any Tech Spec LCO's is (are) not met and any action(s) required within one hour.			X	X	X
	• Given a set of plant parameters or system conditions and the appropriate Tech Specs, determine the required action.				X	*
	• Discuss the bases for a given Tech Spec LCO or Safety Limit					
	* SRO Only					

Monitor Lights (MC-16) are provided in the Control Room to indicate the following:

NS18A OPEN	NS20A CLOSED	NS3B CLOSED	NS1B OPEN	NS32A OPEN	NS29A OPEN
NS15B OPEN	NS12B OPEN	NS43A OPEN	NS38B OPEN	NS Pump A RUNNING	NS Pump B RUNNING

STATUS LIGHTS (on Si-12) in the Control Room provide the operator with the status of the following:

	1	2	5	6
A	Cont Hi Hi Press PB937A			
B	Cont Hi Hi Press PB936A	Cont Hi Press PB936B		
C	Cont Hi Hi Press PB935A	Cont Hi Press PB935B	VX Sys CPCS Train A Inhibit	VX Sys CPCS Train B Inhibit
D	Cont Hi Hi Press PB934A	Cont Hi Press PB934B	NS Sys CPCS Train A Inhibit	NS Sys CPCS Train B Inhibit

NSMT5400 (Upper Cont.) and NSMT5410 (Lower Cont.) on MC-9 provide indication of Containment Relative Humidity in the Control Room.

Objective #6

2.9. Containment Pressure Control System (CPCS)

The purpose of the Containment Pressure Control System is to prevent exceeding the design negative pressure of the containment and also to prevent inadvertent operation of the spray system.

The basic design criteria for the Pressure Control System is that the Spray System is used only when required and terminated when no longer required. This criteria is achieved by eight independent pressure sensors (switches), i.e., four on each train, which provide interlocks to prohibit spray, air return fan and hydrogen skimmer fan operation when containment pressure is below approximately 0.35 psig.

These pressure sensors are listed in the following table, along with the associated equipment with which each sensor interlocks.

Containment Pressure Control System Sensor	
Pressure Transmitter (Sensor)	**Associated Equipment**
NSPT5390	VX Air Return Fan A H_2 Skimmer Fan A
NSPT5500	VX Air Return Fan A VX Air Return Damper A (D-2)
NSPT5520	NS Pump A
NSPT5370	NS29A; NS32A
NSPT5360	NS12B; NS15B
NSPT5380	VX Air Return Fan B H_2 Skimmer Fan B
NSPT5490	VX Air Return Fan B VX Air Return Damper B (D-4)
NSPT5510	NS Pump B

This system is designed such that no single failure can prevent proper containment spray or containment air return and hydrogen skimmer fan initiation. Nor can a single failure allow containment spray or containment air return and hydrogen skimmer fan operation when not required (below 0.35 psig containment pressure).

Each shift, at the local CPCS Panels, an Operator verifies all AC and DC power indicators are illuminated and the control switch is in "NORM". This ensures the operability of the CPCS and is required by Technical Specifications.

Equipment No.	TS / SLC No.	Description
1NCPT5171	3.3.1.6 / 3.3.1.8.a / 3.3.1.8.b / 3.3.2.1.d / 3.3.2.3.a.3 / 3.3.2.5.a.3 / 3.3.2.6.c / 3.3.6.3 / 3.4.1 / 3.4.11	PZR PRESS CH 4
1NDCR5060	3.4.12	1A ND HX DISC TEMP CHART RECORDER
1NDCR5070	3.4.12	1B ND HX DISC TEMP CHART RECORDER
1NDLP5040	3.4.7 / 3.4.8 / 3.5.2 / 3.5.3 / 3.9.5 / 3.9.6	ND A MIN FLOW
1NDLP5050	3.4.7 / 3.4.8 / 3.5.2 / 3.5.3 / 3.9.5 / 3.9.6	ND B MIN FLOW
1NDRD5000	3.4.12	1A ND HX DISC TEMP RTD
1NDRD5120	3.4.12	1B ND HX DISC TEMP RTD
1NILP5260	3.3.3.7	CONT SUMP WR LEV A
1NILP5270	3.3.3.7	CONT SUMP WR LEV B
1NILT5040	3.5.1	A CLA LEV CH 1
1NILT5050	3.5.1	A CLA LEV CH 2
1NILT5060	3.5.1	B CLA LEV CH 1
1NILT5070	3.5.1	B CLA LEV CH 2
1NILT5080	3.5.1	C CLA LEV CH 1
1NILT5090	3.5.1	C CLA LEV CH 2
1NILT5100	3.5.1	D CLA LEV CH 1
1NILT5110	3.5.1	D CLA LEV CH 2
1NIPT5040	3.5.1	A CLA PRESS CH 1
1NIPT5050	3.5.1	A CLA PRESS CH 2
1NIPT5060	3.5.1	B CLA PRESS CH 1
1NIPT5070	3.5.1	B CLA PRESS CH 2
1NIPT5080	3.5.1	C CLA PRESS CH 1
1NIPT5090	3.5.1	C CLA PRESS CH 2
1NIPT5100	3.5.1	D CLA PRESS CH 1
1NIPT5110	3.5.1	D CLA PRESS CH 2
1NSLP5040	3.3.2.1.c / 3.3.2.2.c / 3.3.2.3.b.3 / 3.3.2.4.c	CONT PRESS CH 4
1NSLP5050	3.3.2.1.c / 3.3.2.2.c / 3.3.2.3.b.3 / 3.3.2.4.c	CONT PRESS CH 3
1NSLP5060	3.3.2.1.c / 3.3.2.2.c / 3.3.2.3.b.3 / 3.3.2.4.c	CONT PRESS CH 2
1NSLP5070	3.3.2.2.c /3.3.2.3.b.3 / 3.3.2.4.c	CONT PRESS CH 1
1NSLP5360	3.3.2.9 / 3.6.6	CPCS TR B - NS12B,15B
1NSLP5370	3.3.2.9 / 3.6.6	CPCS TR A - NS29A,32A
1NSLP5380	3.3.2.9 / 3.6.8 / 3.6.11	CPCS TR B - VX/HS FANS
1NSLP5390	3.3.2.9 / 3.6.8 / 3.6.11	CPCS TR A - VX/HS FANS
1NSLP5490	3.3.2.9 / 3.6.11	CPCS TR B - VX DMPR/CARF
1NSLP5500	3.3.2.9 / 3.6.11	CPCS TR A - VX DMPR/CARF
1NSLP5510	3.3.2.9 / 3.6.6	CPCS TR B - NS PUMP B
1NSLP5520	3.3.2.9 / 3.6.6	CPCS TR A - NS PUMP A
1NSLP5530	3.3.3.8	CONT PRESS TR A
1NSLP5540	3.3.3.8	CONT PRESS TR B
1NSLP5550	3.6.4	CONT PRESS NR
1NVLP5120	16.9.7.c	NCP D #1 SEAL LEAKOFF FLO
1NVLP5130	16.9.7.c	NCP C #1 SEAL LEAKOFF FLO
1NVLP5140	16.9.7.c	NCP B #1 SEAL LEAKOFF FLO

1 Pt. Given the following events and conditions on Unit 1:

- A loss of offsite and onsite power has occurred and power will not be restored for two hours
- ETA and ETB are still de-energized
- NC Subcooling is -32 degrees and going down
- Core Exit Thermocouples are 702 degrees and increasing
- Lower Range RVLIS is 50% and going down
- Standby Makeup pump is dissassembled for maintenance

Based on the above conditions how would the event be classified?

REFERENCE PROVIDED

A. Unusual Event

B. Alert

C. Site Area Emergency

D. General Emergency

Bank Question: 1168 ***Answer: D***

1 Pt. Given the following events and conditions on Unit 1:

- A loss of offsite and onsite power has occurred and power will not be restored for two hours
- ETA and ETB are still de-energized
- NC Subcooling is -32 degrees and going down
- Core Exit Thermocouples are 702 degrees and increasing
- Lower Range RVLIS is 50% and going down
- Standby Makeup pump is dissassembled for maintenance

Based on the above conditions how would the event be classified?

REFERENCE PROVIDED
RP/0/A/5700/000

A. Unusual Event

B. Alert

C. Site Area Emergency

D. General Emergency

Distracter Analysis:

A. Incorrect:
Plausible:

B. Incorrect:
Plausible: This classification is possible if the student does not consider the loss of power and only the orange path on core cooling.

C. Incorrect:
Plausible: This classification is possible if the fission product barrier continuing degradation is not considered. At that point a Site Area Emergency would be correct.

D. Correct:

Level: SRO Only. SROs are responsible for making emergency classifications.

KA: APE 000056 G2.4.41 (2.3/4.1)

Lesson Plan Objective:

Source: NEW

Level of knowledge: Comprehension

References:

1. RP/0/A/5700/000 Classification of Emergency

2.4 Emergency Procedures /Plan (Continued)

2.4.35 **Knowledge of local auxiliary operator tasks during emergency operations including system geography and system implications.**
(CFR: 43.5 / 45.13)
IMPORTANCE RO 3.3 SRO 3.5

2.4.36 **Knowledge of chemistry / health physics tasks during emergency operations.**
(CFR: 43.5)
IMPORTANCE RO 2.0 SRO 2.8

2.4.37 **Knowledge of the lines of authority during an emergency.**
(CFR: 45.13)
IMPORTANCE RO 2.0 SRO 3.5

2.4.38 **Ability to take actions called for in the facility emergency plan, including (if required) supporting or acting as emergency coordinator.**
(CFR: 43.5 / 45.11)
IMPORTANCE RO 2.2 SRO 4.0

2.4.39 **Knowledge of the RO's responsibilities in emergency plan implementation.**
(CFR: 45.11)
IMPORTANCE RO 3.3 SRO 3.1

2.4.40 **Knowledge of the SRO's responsibilities in emergency plan implementation.**
(CFR: 45.11)
IMPORTANCE RO 2.3 SRO 4.0

[redacted]
(CFR: 43.5 / 45.11)
IMPORTANCE RO 2.3 SRO 4.1

2.4.42 **Knowledge of emergency response facilities.**
(CFR: 45.11)
IMPORTANCE RO 2.3 SRO 3.7

2.4.43 **Knowledge of emergency communications systems and techniques.**
(CFR: 45.13)
IMPORTANCE RO 2.8 SRO 3.5

1 Pt. Unit 1 is operating at 100 % power.

- A loss of offsite power occurs on Unit 1 due to a ground fault in the switchyard.
- 1ETA has an 86N lockout
- '1B' Diesel Generator is out of service for governor repair.
- Unit 1 is implementing EP/1/A/5000/ECA-0.0 (Loss of All AC Power)
- Unit 2 is operating at 100% power

As control room SRO which one of the following strategies would you implement to ~~bring~~ supply power to an essential bus?

Locally reset the 86N relay and emergency stop, and locally start the 1A D/G

A. ~~Local reset and~~ start of D/G

B. Restore offsite power by closing PCB 8 and PCB 9

C. Energize Unit 1 through SATA

D. Energize Unit 1 through SATB

Bank Question: 1169 ***Answer: D***

1 Pt. Unit 1 is operating at 100 % power.

- A loss of offsite power occurs on Unit 1 due to a ground fault in the switchyard.
- 1ETA has an 86N lockout
- '1B' Diesel Generator is out of service for governor repair.
- Unit 1 is implementing EP/1/A/5000/ECA-0.0 (Loss of All AC Power)
- Unit 2 is operating at 100% power

As control room SRO which one of the following strategies would you implement to bring power to an essential bus?

A. Local reset and start of D/G

B. Restore offsite power by closing PCB 8 and PCB 9

C. Energize Unit 1 through SATA

D. Energize Unit 1 through SATB

Distracter Analysis: The 86N lockout will not allow the normal, standby or D/G breakers to close. Therefore, it will not be possible to re-power ETA. An SRO must understand the conditions of the event and be able to determine his most likely success path. This is why this is an SRO only question. ROs are not responsible for these types decisions.

A. **Incorrect**:
Plausible: If the student does not understand that the 86 lockout will prevent any supply breaker closure.

B. **Incorrect**:
Plausible: Until ground fault is cleared the bus can not be reenergized.

C. **Incorrect**:
Plausible: ETA not available due to lockout.

D. **Correct**:

Level: SRO Only

KA: APE 000056 G2.4.23 (2.8/3.8)

Lesson Plan Objective: OP-MC-EP-ECA-0 Obj. 4

Source: NEW

Level of knowledge: Analysis

References:
1. OP-MC-EP-ECA-0 pages 39 and 65
2. OP-MC-DG-DG page 53
3. OP/1/A/5000/ECA-0.0 page 12

2.2 Equipment Control (Continued)

2.2.18 **Knowledge of the process for managing maintenance activities during shutdown operations.**
(CFR: 43.5 / 45.13)
IMPORTANCE RO 2.3 SRO 3.6

2.2.19 **Knowledge of maintenance work order requirements.**
(CFR: 43.5 / 45.13)
IMPORTANCE RO 2.1 SRO 3.1

2.2.20 **Knowledge of the process for managing troubleshooting activities.**
(CFR: 43.5 / 45.13)
IMPORTANCE RO 2.2 SRO 3.3

2.2.21 **Knowledge of pre- and post-maintenance operability requirements.**
(CFR: 43.2)
IMPORTANCE RO 2.3 SRO 3.5

2.2.22 **Knowledge of limiting conditions for operations and safety limits.**
(CFR: 43.2 / 45.2)
IMPORTANCE RO 3.4 SRO 4.1

2.2.23 **Ability to track limiting conditions for operations.**
(CFR: 43.2 / 45.13)
IMPORTANCE RO 2.6 SRO 3.8

2.2.24 **Ability to analyze the affect of maintenance activities on LCO status.**
(CFR: 43.2 / 45.13)
IMPORTANCE RO 2.6 SRO 3.8

2.2.25 **Knowledge of bases in technical specifications for limiting conditions for operations and safety limits.**
(CFR: 43.2)
IMPORTANCE RO 2.5 SRO 3.7

2.2.26 **Knowledge of refueling administrative requirements.**
(CFR: 43.5 / 45.13)
IMPORTANCE RO 2.5 SRO 3.7

2.2.27 **Knowledge of the refueling process.**
(CFR: 43.6 / 45.13)
IMPORTANCE RO 2.6 SRO 3.5

CLASSROOM TIME (Hours)

NLO	NLOR	LPRO	LPSO	LOR
		1.5	1.5	1.0

OBJECTIVES

SEQ	OBJECTIVE	NLO	NLOR	LPRO	LPSO	LOR
1	Explain the purpose for each procedure in the ECA-0 series. EPECA001			X	X	
2	Discuss the entry and exit guidance for each procedure in the ECA-0 series. EPECA002			X	X	
3	Discuss the mitigating strategy (major actions) of each procedure in the ECA-0 series. EPECA003			X	X	X
4	Discuss the basis for any note, caution or step for each procedure in the ECA-0 series. EPECA004			X	X	X
5	Describe the immediate actions and include the RNO when appropriate. EPECA005			X	X	X
6	Given the appropriate procedure, evaluate a given scenario describing accident events and plant conditions to determine any required action and its basis. EPECA006			X	X	X
7	Discuss the time critical task(s) associated with the ECA-0 series procedures including the time requirements and the basis for these requirements. EPECA007			X	X	X

STEP 13 Defeat auto loading of 1ETA and 1ETB as follows:

PURPOSE: To defeat automatic loading of large loads on the AC emergency bus.

BASIS: If AC power cannot be restored from the control room, it is necessary to dispatch personnel to locally restore AC power. Local actions to restore AC power may result in AC power restoration by means of a temporary jury-rigged power supply.

The longer the duration of the AC power outage, the more likely a plant condition may develop wherein automatic start of equipment upon AC power restoration may occur and may have detrimental affects on the restored AC emergency bus, the automatically started equipment, or other plant equipment, such as the NC pump.

To keep loads from automatically energizing once power is restored, D/G load sequencer power is removed. Control power fuses for NS pumps are also removed, because the Phase B signal to start these pumps does not go through the sequencer.

STEP 14 Check 4160V busses as follows:

PURPOSE: To check status of essential busses.

BASIS: **This action supports performing the next step.**

STEP 15 Restore power to 1ETA and 1ETB using any available power source while continuing in this procedure.

PURPOSE: To initiate local actions to restore AC power.

BASIS: If the operator cannot restore AC power from the control room, it must be restored by local actions. This step instructs the operator to dispatch personnel to locally restore power from any available source by performing any of the following enclosures.

- Enclosure 8, energizing bus with D/G (Local statt)
- Enclosure 9, energize bus from Unit 1 (Offsite power)
- Enclosure 10, energize bus from Unit 2

Enclosure 9, Energizing 4160 V Bus from Unit 2

This enclosure provides actions for energizing a 4160 V Bus from Unit 2. It consists of two sections energizing 1ETB from SATB and energizing 1ETA from SATA.

If either bus is energized, the operator is directed back to the body of the procedure to stop any S/G depressurization in progress and load necessary equipment on the energized bus. If unable to energize either bus, the operator is directed to the step in effect in the body of the procedure.

Enclosure 10, Energizing 4160 V Bus from Unit 1

This enclosure provides action for energizing a 4160 V bus from Unit 1. It consists of two sections energizing 1ETB from SATB and energizing 1ETA from SATA.

If either bus is energized, the operator is directed back to the body of the procedure to stop any S/G depressurization in progress and load necessary equipment on the energized bus. If unable to energize either bus, the operator is directed to the step in effect in the body of the procedure.

Enclosure 11, Locally Removing Loads from 6900 V Busses

This enclosure provides actions for locally removing specified 6900 V loads from the bus.

Enclosure 12, Local closure of MSIVs

This enclosure provides actions for locally closing the MSIVs. It consists of two pages: one for the interior doghouse and one for the exterior doghouse. The MSIVs are closed by isolating the air supply then loosening a flange on the air line. This bleeds the air from under the MSIV piston allowing springs to close the valve. Maintenance assistance will be required to loosen flange. An operator is dispatched to perform this enclosure if the MSIVs are required to be closed but cannot be closed from the Control Room.

Enclosure 13, Faulted or Ruptured S/G Isolation

This enclosure provides actions for isolating CA flow to a faulted or ruptured S/G. Steam flow must be maintained to the TD CA Pump from at least one S/G. If B or C S/G is the faulted/ruptured S/G, additional actions to isolate steam to the TD CA pump are required. This enclosure is performed if S/G pressure(s) indicate a faulted S/G or if secondary radiation indicates a ruptured S/G.

Enclosure 14, Maintaining CA Suction Sources

This enclosure is performed to ensure a source of water to the TD CA Pump suction is maintained. It applies until CA flow is no longer required.

NOTE: The Emergency Stop Pushbutton can also be used to stop the Diesel Generator, but this push-button is used only in an Emergency.

Objective # 10

The **Emergency Stop Reset Pushbutton** is used to regain control of the Diesel Generator following the three Automatic Mode Trips.

- Low Lube Oil Pressure.
- Engine Overspeed.
- Emergency Stop.

To prevent damage to the diesel following one of these Automatic Mode Trips, their signals are wired through the Emergency Stop Reset Switch. With the Auto Start signal still present, this prevents the diesel from attempting another auto start.

Objective # 10

This 86D Lockout Relay will automatically actuate and trip the diesel if either an 87G (Generator Differential) or 51V (Generator Voltage Controlled Overcurrent) relay has actuated. This relay will also trip and lockout the diesel breaker. To regain control of the diesel after either of these relays actuate, the 86D Lockout Relay must be Reset.

With all the Auto Start Permissives satisfied, the Diesel will Auto Start upon receiving a signal from the Sequencer.

The diesel is considered to be running when diesel speed is ≥ 95%. The Low Lube Oil Pressure trip becomes active when ≥ 95% after a 30 second time delay and will function the same as with a manual start.

Objective # 6

The following is a list of the signals, which will trip the Diesel Generator after an Automatic Start.

1. Low Lube Oil Pressure (<28 psig on 2/2 switches). This trip resets when lube oil pressure exceeds 33 psig on an initial diesel start.
2. Overspeed (>112% on 2/3 speed switches).
3. Emergency Stop.
4. 86D Lockout Relay actuated (87G or 51V).

Each of these trips, except the 86D Lockout Relay, will give an annunciator alarm on the local diesel control panel as well as the Diesel Generator Panel Trouble alarm in the Control Room. Those alarms that affect diesel operability will also illuminate an inoperable status light on the OAC 1.47 Graphic.

Following any automatic start of the diesel generator, diesel shutdown is accomplished by way of the local stop switch on the local diesel generator control panel. This switch is connected in series with a diesel auto start relay seal in contact which keeps the auto start relay energized after the diesel load sequencer has been reset. By depressing the local stop switch after the diesel load sequence has been reset, the diesel auto start relay de-energizes, allowing the diesel to shut down.

ACTION/EXPECTED RESPONSE	RESPONSE NOT OBTAINED
17. **Restore power to 1ETA or 1ETB using any of the following while continuing with this procedure:** __ • Local reset and start of D/G PER Enclosure 7 (Energizing Unit 1 4160 V Bus With D/G) OR __ • Unit 1 offsite power PER Enclosure 8 (Energizing Unit 1 4160 V Bus From Unit 1). OR __ • Unit 2 6900V busses through SATA or SATB PER Enclosure 9 (Energizing Unit 1 4160 V Bus From Unit 2 - SATA or SATB).	**Perform the following:** __ a. IF selected power supply will not work, THEN select another power supply. __ b. IF power supply cannot be restored, THEN contact TSC for guidance on power restoration.
__ 18. **IF AT ANY TIME power is restored to 1ETA or 1ETB using means other than enclosures specified in Step 17, THEN GO TO Step 34. (Enclosures provide their own transitions to Step 34.)**	

1 Pt. Given the following conditions on Unit 1:

- Unit 1 100% power with all systems in normal alignment
- EVDB Distribution Center Bus Breaker opens due to breaker fault.
- Row 2 Status Lights in the control room for Unit 1 illuminate

Which one of the following is the correct strategy for system alignment and indication used to verify that strategy has been successful?

A. **Implement AP/015 (Loss of Vital or Aux Control Power)**
Align Regulated power source 1KRP to 1EKVB
Cross tie EVDB and EVDD
Pressurizer Pressure Channel 2 indicating "normal"

B. **Implement OP/1/A/6350/001A (125VDC/120VAC Vital I&C Power System)**
Cross tie 1EKVB to1EKVD
Align Standby Charger to EVDB
"OFF" indication lit on 1B ND Pump control switch

C. **Implement OP/1/A/6350/001A**
1EKVB powered from inverter 1EVIB
Cross tie EVDB to EVDC
Pressurizer Pressure Channel 2 indicating "normal"

D. **Implement AP/015**
IEKVB auto swaps to alternate source to load
EVDB remained energized via battery EVCB
"OFF" indication lit on 1B ND Pump control switch

Bank Question: 1170 ***Answer: A***

1 Pt. Given the following conditions on Unit 1:

- Unit 1 100% power with all systems in normal alignment
- EVDB Distribution Center Bus Breaker opens due to breaker fault.
- Row 2 Status Lights in the control room for Unit 1 illuminate

Which one of the following is the correct strategy for system alignment and indication used to verify that strategy has been successful?

A. **Implement AP/015 (Loss of Vital or Aux Control Power)**
Align Regulated power source 1KRP to 1EKVB
Cross tie EVDB and EVDD
Pressurizer Pressure Channel 2 indicating "normal"

B. **Implement OP/1/A/6350/001A (125VDC/120VAC Vital I&C Power System)**
Cross tie 1EKVB to1EKVD
Align Standby Charger to EVDB
"OFF" indication lit on 1B ND Pump control switch

C. **Implement OP/1/A/6350/001A**
1EKVB powered from inverter 1EVIB
Cross tie EVDB to EVDC
Pressurizer Pressure Channel 2 indicating "normal"

D. **Implement AP/015**
IEKVB auto swaps to alternate source to load
EVDB remained energized via battery EVCB
"OFF" indication lit on 1B ND Pump control switch

Distracter Analysis:

A. **Correct**:

B. **Incorrect**:
Plausible: The OP assumes power is still available and the standby charger would be the normal power source. Due to the failure, the AP is the correct flow path. The AC portion of vital I&C cannot be cross tied. Control power to 1B ND is supplied from Channel D so indication was never lost.

C. **Incorrect**:
Plausible: Same and cross tying Channel B and C is not permitted.

D. **Incorrect**
Plausible: The failure is downstream of the batteries. No auto swap will occur. Control power to 1B ND is supplied from Channel D so indication was never lost.

LEVEL: SRO Only

KA: APE 000057 AA2.14 (3.2/3.6)

SOURCE: NEW

LEVEL OF KNOWLEDGE: Comprehensive

AUTHOR: CWS

LESSON: OP-MC-EL-EPL

OBJECTIVES: OP-MC-EL-EPL Ojbs 7 and 15

REFERENCES: -
OP-MC-EP-EPL pages 19 and 27
AP/1/A/5500/15 Page 13 and enclosures 3 and 11

APE: **057 Loss of Vital AC Electrical Instrument Bus**

AA2. **Ability to determine and interpret the following as they apply to the Loss of Vital AC Instrument Bus: (CFR: 43.5 / 45.13)**

AA2.01	Safety injection tank pressure and level indicators	3.7	3.8
AA2.02	Core flood tank pressure and level indicators	3.7*	3.8*
AA2.03	RPS panel alarm annunciators and trip indicators	3.7	3.9
AA2.04	ESF system panel alarm annunciators and channel status indicators	3.7	4.0
AA2.05	S/G pressure and level meters	3.5	3.8
AA2.06	AC instrument bus alarms for the inverter and alternate power source	3.2	3.7
AA2.07	Valve indicator of charging pump suction valve from RWST	3.3	3.5
AA2.08	Reactor power digital display and remote flux meter	3.4*	3.5*
AA2.09	T-ave. and T-ref. chart recorder	3.1*	3.4*
AA2.10	Turbine load limiter control	2.3	2.5
AA2.11	Main feed pump running indicator and controller	2.9*	3.0*
AA2.12	PZR level controller, instrumentation, and heater indications	3.5	3.7
AA2.13	VCT level and pressure indicators and recorders	3.0	3.4
AA2.14	That substitute power sources have come on line on a loss of initial ac	3.2	3.6
AA2.15	That a loss of ac has occurred	3.8	4.1
AA2.16	Normal and abnormal PZR level for various modes of plant operation	3.0	3.1
AA2.17	System and component status, using local or remote controls	3.1	3.4
AA2.18	The indicator, valve, breaker, or damper position which will occur on a loss of power	3.1	3.1
AA2.19	The plant automatic actions that will occur on the loss of a vital ac electrical instrument bus	4.0	4.3
AA2.20	Interlocks in effect on loss of ac vital electrical instrument bus that must be bypassed to restore normal equipment operation	3.6	3.9

CLASSROOM TIME (Hours)

NLO	NLOR	LPRO	LPSO	LOR
3.0	3.0	2.0	2.0	2.0

OBJECTIVES

	OBJECTIVE	NLO	NLOR	LPRO	LPSO	LOR
1	State the purpose of the 125 VDC and 120 VAC Vital Instrumentation and Control Power Systems.	X	X	X	X	
2	Draw a simplified composite of the 125 VDC and 120 VAC Vital Instrumentation and Control Power Systems as provided in Training Drawing 7.2, Simplified 125 VDC and 120 VAC Vital Instrumentation and Control Power Drawing.	X	X	X	X	
3	Provide a general description of the 125 VDC Vital Instrumentation and Control Power System.	X	X	X	X	
4	List the typical loads powered from the 125 VDC Vital Instrumentation and Control Power System Distribution Centers.	X	X	X	X	
5	Provide a general description of the 120 VAC Vital Instrumentation and Control Power System.	X	X	X	X	
6	List the typical loads powered from the 120 VAC Vital Instrumentation and Control Power System Power Panelboards.	X	X	X	X	
7	Describe the basis for the sizing (loading) of the battery charger associated with the 125 VDC Vital Instrumentation and Control Power System.	X	X	X	X	
8	Discuss the normal loading demands associated with the 125 VDC Battery Chargers for the Vital Instrumentation and Control Power System.	X	X	X	X	
9	Describe any of the Kirk-Key Interlocks associated with the 125 VDC Vital Instrumentation and Control Power System and state the purpose of the Kirk-Key arrangement.	X	X	X	X	X
10	Explain how the Standby Battery Charger is used during an equalizing charge of a 125 VDC Battery for the Vital Instrumentation and Control Power System.	X	X	X	X	X

	OBJECTIVE	NLO	NLOR	LPRO	LPSO	LOR
11	Describe the major difference between using the Standby Battery Charger during an equalizing charge and during standby service as a battery charger.		X	X	X	X
12	State the duty-cycle requirements, assumed within our safety analysis (UFSAR), associated with each 125 VDC Battery for the Vital Instrumentation and Control Power System.	X	X	X	X	X
13	Describe the purpose of the DC Tie Breakers associated with DC Distribution Centers; EVDA and EVDC, EVDB and EVDD.	X	X	X	X	
14	Explain how the 125 VDC and the 120 VAC Vital Instrumentation and Control Power Systems are interconnected.	X	X	X	X	
15	Describe operation of the Manual Transfer Switch associated with the Static Inverters for the Vital Instrumentation and Control Power System.	X	X	X	X	X
16	Describe any of the Kirk-Key Interlocks associated with the 120 VAC Vital Instrumentation and Control Power System and state the purpose of the Kirk-Key arrangement.	X	X	X	X	X
17	Describe operation of the "Auto Transfer Switch" associated with 1KRP and 2 KRP (Regulated Power Distribution Centers).	X	X	X	X	X

120 VAC Vital Instrumentation and Control Power System

Objective # 5

The 120 VAC Vital Instrumentation and Control Power System consists of four vital panelboards and four inverters to each unit. The four vital panelboards will normally receive power through static inverters 1(2)EVIA, 1(2)EVIB, 1(2)EVIC and 1(2)EVID. A regulated power supply (1KRP for Unit 1 and 2 KRP for Unit 2) is also provided, as an alternate power source, to allow uninterruptible manual power transfer to panelboards 1(2)EKVA, 1(2)EKVB, 1(2)EKVC, and 1(2)EKVD when an inverter is intentionally taken out-of-service.

This system provides four independent channels for instrumentation and control power to both units (Unit 1 and 2). A Train loads are fed from channels A and C while the B Train loads are fed from channels B and D. Three of the four channels will ensure that the overall system functional capability is maintained, comparable to the original design standards for safe operation. However, a loss of any two of these channel sources will result in a shutdown of the respective unit.

Objective # 6

The following is a listing of typical loads that are powered from the 120 VAC Distribution Centers:

- NIS Channels 1 thru 4 Instrument Power
- NIS Channels 1 thru 4 Control Power
- SSPS Instrument Power
- SSPS Control Power
- FWST Channels 1 thru 4 Instrument Power
- NCP Power Monitors
- Containment Radiation Monitors Isolation Valves
- Auxiliary Safeguard Cabinets Instrument Power
- Post Accident Recorders
- Post Accident Annunciators

2.0 COMPONENT DESCRIPTION

2.1. 125 VDC Vital Instrumentation and Control Power System Battery Chargers

The two-unit station is provided with five battery chargers, designated EVCA, EVCB, EVCC, EVCD; and a spare battery charger, designated EVCS, which can be used to replace a charger if required. These chargers, supplied by SCI (Solid state Controls Incorporated), are 500 ampere chargers with a charging capability of 500-625 amps, however, we have them current limited at 525 amperes.

Objective # 7

1) Each battery charger is sized to carry its own individual load plus the loads of another charger in a "backup" capacity, if required.
2) Each battery charger is also sized to re-charge its associated battery within eight hours after a discharge or discharge test.

2.4 120VAC Vital Instrumentation and Control Power System

Objective # 14

Each unit's 120 VAC Vital Instrumentation and Control Power System normally receives power from the 125 VDC Vital Instrumentation and Control Power System through static inverters, 1(2)EVIA, 1(2)EVIB, 1(2)EVIC and 1(2)EVID, and their respective manual transfer switch (when in the "Inverter to Load" position).

Two static inverters are fed from each independent 125V DC distribution center. Each static inverter provides power to one of the eight AC power panelboards (1EKVA, 1EKVB, 1EKVC, 1EKVD, 2EKVA, 2EKVB, 2EKVC, and 2EKVD). Four Distribution Centers (EVDA, EVDB, EVDC and EVDD) supply four channels of power which are shared between the two units (Units 1 & 2 EVIA fed from distribution center EVDA and etc.).

Objective # 15

A manual transfer switch (also called manual bypass switch), associated with each static inverter, allows power transfer from the respective inverter to an alternate regulated power source (1KRP or 2KRP) during a loss of inverter. Because the manual transfer switch is a "make before break" switch, with overlapping contacts, transfer of the power source can be accomplished without an interruption of power.

This alternate regulated power supply (1KRP for Unit 1 and 2KRP for Unit 2) will allow an uninterruptible manual transfer of power to only one of the four unit associated AC power panelboards (1EKVA, 1EKVB, 1EKVC, or 1EKVD for Unit 1 and 2EKVA, 2EKVB, 2EKVC, or 2EKVD for Unit 2).

Objective # 16

A Kirk-Key Interlock scheme is provided on all four feeder breakers, of the regulated power supply (1KRP or 2KRP), such that only one breaker may be closed at a time.
This interlock prevents:

1. ***The operator from supplying both Train A and Train B from a single power source.***
2. ***The loss of two instrument and control channels from the failure of one power source.***

1KRP receives its power from two shared MCCs (SMXT or SMXY) through voltage regulators 1VRA or 1VRB and its associated transformer.

2KRP receives its power from two shared MCCs (SMXW or SMXU) through voltage regulators 2VRA or 2VRB and its associated transformer.

Both of these power supplies, 1KRP and 2KRP, are located in the Vital I&C Battery Room on the South Outside Wall of the EVCB and EVCD Battery Rooms, between the accesses to Battery Chargers EVCB and EVCD (1KRP is on the Unit 2 side and 2KRP on the Unit 1 side). Several plant transients, including a reactor trip, have been attributed to the operator manipulating the wrong unit's KRP during Vital Inverter Startup / Shutdown operation.

ACTION/EXPECTED RESPONSE	RESPONSE NOT OBTAINED
17. **Dispatch operator to perform the following while continuing with this procedure:**	
__ a. Determine exact cause of alarm(s).	
b. Restore power to the affected bus or panelboard using the following enclosures:	
__ • Enclosure 2 (Restoring Power To EVDA, 1EVDA, 2EVDA)	
OR	
__ • Enclosure 3 (Restoring Power To EVDB, 1EVDB, 2EVDB)	
OR	
__ • Enclosure 4 (Restoring Power To EVDC, 1EVDC, 2EVDC)	
OR	
__ • Enclosure 5 (Restoring Power To EVDD, 1EVDD, 2EVDD).	
__ 18. **WHEN power is restored to all affected bus(s), THEN GO TO Step 75.**	
__ 19. **Check ND - IN RHR MODE.**	__ **GO TO Step 21.**
20. **Align ND flow control valves as follows:**	
a. Check Vital DC panelboard 1EVDA energized as follows:	__ a. Open manual loader for 1ND-29 (A ND Hx Outlet).
__ • Switch indication on any pump powered from 1ETA - LIT.	
b. Check Vital DC panelboard 1EVDD energized as follows:	__ b. Open manual loader for 1ND-14 (B ND Hx Outlet).
__ • Switch indication on any pump powered from 1ETB - LIT.	

ACTION/EXPECTED RESPONSE	RESPONSE NOT OBTAINED

CAUTION

- **Visibly damaged breakers shall not be operated without IAE approval.**
- **An attempt at closing a "TRIPPED" breaker is allowed in restoring power to EVDB. If a tripped breaker re-opens after being closed, IAE should investigate prior to further operation of the breaker.**
- **When closing a tripped breaker, the operator should not stand directly in front of the breaker cubicle.**

1. **IF AT ANY TIME during performance of this enclosure a breaker trips after being closed, THEN perform the following:**

   __ a. Notify IAE to investigate cause of breaker tripping.

   __ b. Have station management evaluate whether plant conditions warrant continuation of this enclosure prior to completion of IAE's investigation.

2. **Check the following breakers - CLOSED:**

   __ • Distribution Center EVDB Compartment 3C (Instr & Contr Pwr Pnlbd No 1EVDB)

   __ • Distribution Center EVDB Compartment 3D (Instr & Contr Pwr Pnlbd No 2EVDB).

   Perform the following:

   __ a. Close breaker(s).

   b. IF breaker(s) cannot be closed, THEN perform the following:

   __ 1) Contact IAE to repair breaker.

   __ 2) Do not continue in this enclosure until breaker is closed.

__ 3. **Check EVDB Distribution Center voltage - GREATER THAN OR EQUAL TO 115 VOLTS.**

__ **GO TO Step 6.**

ACTION/EXPECTED RESPONSE	RESPONSE NOT OBTAINED
4. **Check the following lights on 1LAMP1 Panel Module 1LAM2 - DARK:** __ • "PANELBOARD 1EVDB UNDERVOLTAGE" __ • "PANELBOARD 2EVDB UNDERVOLTAGE".	__ **Contact IAE to investigate cause of lamp panel alarm.**
__ 5. **Notify Control Room that EVDB is energized and exit this enclosure.**	
6. **Open the following breakers to remove vital inverters from service:** __ • Distribution Center EVDB compartment 3E (Static Inverter No. 1EVIB) __ • Distribution Center EVDB compartment 3F (Static Inverter No. 2EVIB).	
7. **<u>IF</u> <u>AT</u> <u>ANY</u> <u>TIME</u> it is determined that power will not be restored to EVDB Distribution Center in a timely manner, <u>THEN</u> evaluate performing the following:** __ • Align AC Panelboard 1EKVB to 1KRP <u>PER</u> Enclosure 11 (Restoring Power To 1EKVB). __ • Align AC Panelboard 2EKVB to 2KRP <u>PER</u> AP/2/A/5500/15 (Loss of Vital or Aux Control Power), Enclosure 10 (Restoring Power To 2EKVB).	

ACTION/EXPECTED RESPONSE	RESPONSE NOT OBTAINED

CAUTION **Closing tie breakers between EVDB and EVDD may cause a loss of power to EVDD. Do not cross tie EVDB and EVDD unless the reason for the distribution center losing power is understood and the consequences of cross-tying have been thoroughly evaluated.**

NOTE Restoring power to EVDB using EVCB battery and charger is the preferred method.

8. **Select method of restoring power to EVDB:**

   __ • IF it is desired to reenergize EVDB using EVCB battery and charger, THEN GO TO Step 9.

   OR

   __ • IF it is desired to reenergize EVDB using tie breakers to EVDD, THEN GO TO Step 10.

9. **Restore power to EVDB from EVCB battery and charger as follows:**

   __ a. Check "EQUALIZE" light on EVCB battery charger - DARK.

   a. Perform one of the following:

   __ • Remove battery from equalize charge PER OP/0/A/6350/001 A (125 VDC/120 VAC Vital Instrument And Control Power System).

   OR

   __ • GO TO Step 10.

ACTION/EXPECTED RESPONSE	RESPONSE NOT OBTAINED

9. (Continued)

b. Ensure the following breakers - CLOSED:

__ • Distribution Center EVDB Compartment 2A (Battery EVCB Switch)

__ • Distribution Center EVDB Compartment 2B (Main Incoming Fuse).

CAUTION **It may be necessary to apply pressure on the breaker rotary switch in the counterclockwise direction while operating the kirk key device(s).**

__ c. Ensure Kirk-Key inserted in ECB2.

d. Align EVCB battery charger to Unit 1 or Unit 2 as follows:

• IF desired to align EVCB battery charger to Unit 1, THEN ensure the following breakers - CLOSED:

__ • ECB2-1B (Normal Inc Supply from MCC 1EMXB)

__ • 1EMXB-5F (Vital AC-DC System Battery Charger No EVCB).

OR

• IF desired to align EVCB battery charger to Unit 2, THEN ensure the following breakers - CLOSED:

__ • ECB2-1C (Alt Inc Supply from MCC 2EMXB)

__ • 2EMXB-5F (Vital AC-DC System Battery Charger No EVCB Alternate Feeder).

__ e. Close Distribution Center EVDB Compartment 1A (Chgr EVCB DC Output Bkr To Dist Cntr EVDB).

ACTION/EXPECTED RESPONSE	RESPONSE NOT OBTAINED
9. (Continued)	
__ f. Close "AC INPUT" breaker on Battery Charger EVCB.	
__ g. Contact Control Room to start EVCB Battery Charger.	g. **IF** battery charger will not start, **THEN**: **NOTE** "HIGH DC SHUNT TRIP ALARM RESET" should only be depressed once. __ 1) Depress "HIGH DC SHUNT TRIP ALARM RESET" on the front panel of charger. __ 2) Check the "HIGH DC SHUNT TRIP" light - DARK. __ 3) **IF** battery charger will not reset, **THEN** contact IAE.
__ h. Check "FLOAT" indicator light - LIT.	__ h. Place "BATT CHGR EVCB SELECTOR" switch to "FLOAT" position.
__ i. Close "DC OUTPUT" breaker on battery charger EVCB.	
__ j. Check EVDB Distribution Center voltage - GREATER THAN OR EQUAL TO 115 VOLTS.	__ j. **GO TO** Step 10.
__ k. Notify Control Room that EVDB is energized.	
__ l. **GO TO** Step 11.	

ACTION/EXPECTED RESPONSE	RESPONSE NOT OBTAINED
10. **Restore power to EVDB using tie breakers to EVDD.**	
__ a. Have Control Room check "BATT EVCD GROUND" alarm (1AD-11, F-3) - DARK.	a. Perform the following: __ 1) Do not cross tie busses. __ 2) Notify IAE to investigate. __ 3) Observe Caution and Note prior to Step 8 and <u>RETURN TO</u> Step 8.
b. Align AC panelboards to KRP as follows: __ • Align 1EKVB panelboard to 1KRP <u>PER</u> Enclosure 11 (Restoring Power To 1EKVB). __ • Align 2EKVB panelboard to 2KRP <u>PER</u> AP/2/A/5500/15 (Loss of Vital or Aux Control Power), Enclosure 10 (Restoring Power To 2EKVB).	
__ c. Do not continue until 1EKVB and 2EKVB are energized from KRP.	
__ d. Open Distribution EVDB Compartment 2B (Main Incoming Fuse).	
__ e. Close Distribution Center EVDB Compartment 1B (125 VDC Bus EVDB Tie Bkr To 125 VDC Bus EVDD).	
__ f. Close Distribution EVDD Compartment 1B (125 VDC Bus EVDD Tie Bkr To 125 VDC Bus EVDB).	
__ g. Check EVDB Distribution Center voltage - GREATER THAN OR EQUAL TO 115 VOLTS.	__ g. <u>RETURN TO</u> Step 9.
__ h. Notify Control Room that EVDB is energized.	
__ 11. **On 1LAMP1 Panel Module 1LAM7, check "PANEL BOARD 1EKVB UNDERVOLTAGE" light - DARK.**	__ **Restore power to 1EKVB panelboard <u>PER</u> Enclosure 11 (Restoring Power To 1EKVB).**

ACTION/EXPECTED RESPONSE	RESPONSE NOT OBTAINED
__ 12. **On 2LAMP10 Panel Module 2LAM21, check "PANEL BOARD 2EKVB UNDERVOLTAGE" light - DARK.**	__ **Restore power to 2EKVB panelboard PER AP/2/A/5500/15 (Loss of Vital or Aux Control Power), Enclosure 10 (Restoring Power To 2EKVB).**
__ 13. **RETURN TO procedure and step in effect.**	

ACTION/EXPECTED RESPONSE	RESPONSE NOT OBTAINED

1. **Dispatch IAE to perform the following in the Control Room:**

   a. Open the following breakers inside Unit 1 7300 Protection Cabinet II:

   __ 1) DC Output Breaker on the front of the power supply for the Primary (+26 VDC) Power Supply.

   __ 2) DC Output Breaker on the front of the power supply for the Backup (+24 VDC) Power Supply.

   b. Open the bottom set of power supply breakers inside Unit 1 A Train SSPS Logic Cabinet:

   __ 1) +48 VDC output power breaker

   __ 2) +15 VDC output power breaker.

__ 2. **Ensure breakers in Step 1 opened prior to restoring power to 1EKVB.**

<u>CAUTION</u>

- **Visibly damaged breakers shall not be operated without IAE approval.**
- **An attempt at closing a "TRIPPED" breaker is allowed in restoring power to 1EKVB. If a tripped breaker re-opens after being closed, IAE should investigate prior to further operation of the breaker.**
- **When closing a tripped breaker, the operator should not stand directly in front of the breaker cubicle.**

3. **<u>IF AT ANY TIME</u> during performance of this enclosure a breaker trips after being closed, <u>THEN</u> perform the following:**

   __ a. Notify IAE to investigate cause of breaker tripping.

   __ b. Have station management evaluate whether plant conditions warrant continuation of this enclosure prior to completion of IAE's investigation.

ACTION/EXPECTED RESPONSE	RESPONSE NOT OBTAINED
__ 4. **On 1EVIB Manual Bypass Switch panel, check "AC OUTPUT NO. 1" breaker - CLOSED.**	**Perform the following:** __ a. Close breaker. __ b. IF breaker cannot be closed, THEN contact IAE to repair breaker. __ c. Do not continue in this Enclosure until breaker is closed. __ d. On 1EVIB Manual Bypass Switch panel, check 1EKVB panelboard voltage on "AC OUTPUT VOLTAGE". __ e. IF 1EKVB voltage greater than or equal to 110 volts, THEN GO TO Step 8. __ f. IF 1EKVB voltage less than 110 volts, THEN GO TO Step 5.
5. **Select method of restoring power to 1EKVB:** __ • IF it is desired to reenergize 1EKVB using 1KRP, THEN GO TO Step 6. OR __ • IF it is desired to reenergize 1EKVB using 1EVIB Vital Inverter, THEN GO TO Step 7.	

ACTION/EXPECTED RESPONSE	RESPONSE NOT OBTAINED
6. **Align 1KRP to 1EKVB as follows:**	
__ a. On 1LAMP1 Panel Module 1LAM13, check "REGULATED POWER PANELBOARD (1KRP) UNDERVOLTAGE" light - DARK.	a. Perform the following: __ 1) Attempt to energize 1KRP. __ 2) IF 1KRP cannot be energized, THEN GO TO Step 7. 3) IF 1KRP can be energized, THEN: __ a) Do not continue until 1KRP energized. __ b) WHEN 1KRP energized, THEN check 1EKVB Panelboard voltage on 1EVIB Manual Bypass Switch panel, "AC OUTPUT VOLTAGE". __ c) IF 1EKVB voltage less than 110 volts, THEN GO TO Step 6.b. __ d) IF 1EKVB voltage greater than or equal to 110 volts, THEN GO TO Step 8.
b. Ensure the following breakers on 1EVIB Vital Inverter are open: __ 1) "INVERTER AC OUTPUT". __ 2) "DC INPUT".	
__ c. Open Distribution Center EVDB Compartment 3E (Static Inverter No. 1EVIB).	
__ d. On 1EVIB Manual Bypass Switch panel, ensure sync toggle switch selected to "SYNC DISCONNECT".	

ACTION/EXPECTED RESPONSE	RESPONSE NOT OBTAINED

6. (Continued)

CAUTION **It may be necessary to apply pressure on the breaker rotary switch in the counterclockwise direction while operating the kirk key device(s).**

NOTE Kirk-key interlock prohibits closing of more than one supply breaker from the regulated power supply.

e. Check the following breakers - OPEN:

__ • 1KRP - 1A (Alternate Regulated Power Supply to Power Panelboard 1EKVA)

__ • 1KRP - 1C (Alternate Regulated Power Supply to Power Panelboard 1EKVC)

__ • 1KRP - 1D (Alternate Regulated Power Supply to Power Panelboard 1EKVD).

e. Perform the following:

__ 1) Notify Control Room to evaluate swapping bus aligned to 1KRP back to its associated Static Inverter **PER** OP/0/A/6350/001 A (125 VDC/120 VAC Vital Instrument And Control Power System).

2) **IF** bus aligned to 1KRP can be swapped to its associated Vital Inverter, **THEN**:

__ a) Swap **PER** OP/0/A/6350/001 A (125 VDC/120 VAC Vital Instrument And Control Power System).

__ b) Do not continue until swap complete.

__ 3) **IF** bus aligned to 1KRP cannot be swapped back to its associated Vital Inverter, **THEN GO TO** Step 7.

__ f. Using Kirk key, close 1KRP - 1B (Alternate Regulated Power Supply to Power Panelboard 1EKVB).

__ g. On 1EVIB Manual Bypass Switch panel, place "MANUAL BYPASS SWITCH" to "ALTERNATE AC SOURCE TO LOAD".

__ h. On 1EVIB Manual Bypass Switch panel, check "AC OUTPUT VOLTAGE" - GREATER THAN OR EQUAL TO 110 VOLTS.

__ h. **RETURN TO** Step 5.

ACTION/EXPECTED RESPONSE	RESPONSE NOT OBTAINED

6. (Continued)

__ i. On 1EVIB Manual Bypass Switch panel, ensure "ALARMS BYPASSED WITH KEY TURNED CLOCKWISE" in 10 o'clock position.

__ j. GO TO Step 8.

7. **Align 1EVIB Vital Inverter to 1EKVB as follows:**

__ a. Ensure 1KRP - 1B (Alternate Regulated Power Supply to Power Panelboard 1EKVB) is open.

b. Ensure the following breakers on 1EVIB Vital Inverter are open:

__ 1) "INVERTER AC OUTPUT" Breaker.

__ 2) "DC INPUT" Breaker.

__ c. Ensure Distribution Center EVDB Compartment 3E (Static Inverter No. 1EVIB) is closed.

__ d. On 1EVIB Vital Inverter, depress and hold "PRE-CHARGE" pushbutton.

e. WHEN pushbutton has been held for 30 seconds, THEN perform the following substeps in rapid succession:

__ 1) Release "PRE-CHARGE" pushbutton.

__ 2) Close "DC INPUT" breaker on 1EVIB Vital Inverter.

ACTION/EXPECTED RESPONSE	RESPONSE NOT OBTAINED
7. (Continued)	
f. Check the following on 1EVIB Vital Inverter:	f. Perform the following:
__ • Inverter Output voltage - 110 - 130 VOLTS	__ 1) Dispatch IAE personnel to investigate.
__ • Inverter Output Frequency - APPROXIMATELY 60 HZ.	__ 2) RETURN TO Step 5.
__ • Inverter Output current - APPROXIMATELY 0 AMPS.	
__ g. Close 1EVIB Vital Inverter "INVERTER AC OUTPUT" Breaker.	
__ h. On 1EVIB Manual Bypass Switch panel, place "MANUAL BYPASS SWITCH" to "INVERTER TO LOAD".	
i. Check the following on 1EVIB Vital Inverter:	i. Perform the following:
__ • "INVERTER SUPPLYING LOAD" lamp - LIT	__ 1) On 1EVIB Manual Bypass Switch panel, check "AC OUTPUT VOLTAGE".
__ • "ALTERNATE AC SOURCE SUPPLYING LOAD" lamp - DARK	2) IF voltage greater than or equal to 110 volts, THEN perform the following:
__ • "LOW AC OUTPUT VOLTAGE" lamp - DARK.	__ a) WHEN time allows, THEN notify IAE to investigate.
	__ b) GO TO Step 7.j.
	3) IF voltage less than 110 volts, THEN perform the following:
	__ a) Notify IAE to investigate.
	__ b) RETURN TO Step 5.

ACTION/EXPECTED RESPONSE	RESPONSE NOT OBTAINED
7. (Continued)	
j. Check voltages at the following locations - READING THE SAME.	__ j. **WHEN** time allows, **THEN** notify IAE to investigate.
__ • "INVERTER OUTPUT VOLTAGE" on Vital Inverter 1EVIB	
__ • "AC OUTPUT VOLTAGE" on 1EVIB Manual Bypass Switch panel.	
k. Check amps at the following locations - READING THE SAME.	__ k. **WHEN** time allows, **THEN** notify IAE to investigate.
__ • "INVERTER OUTPUT CURRENT" on Vital Inverter 1EVIB	
__ • "AC OUTPUT CURRENT" on 1EVIB Manual Bypass Switch panel.	
__ l. Do not continue until inverter amps and volts are stable.	
__ m. On 1EVIB Manual Bypass Switch panel, ensure "ALARMS BYPASSED WITH KEY TURNED CLOCKWISE" in 2 o'clock position.	

ACTION/EXPECTED RESPONSE	RESPONSE NOT OBTAINED

8. **Dispatch IAE to perform the following in the Control Room:**

   a. Close the following breakers inside Unit 1 7300 Protection Cabinet II:

   __ 1) DC Output Breaker on the front of the power supply for the Backup (+24 VDC) Power Supply.

   __ 2) DC Output Breaker on the front of the power supply for the Primary (+26 VDC) Power Supply.

   b. Close the bottom set of power supply breakers inside Unit 1 A Train SSPS Logic Cabinet:

   __ 1) +15 VDC output power breaker

   __ 2) +48 VDC output power breaker.

__ 9. **Notify Control Room that 1EKVB is energized and exit this enclosure.**

1 Pt. Unit 2 is operating at 100 % power. Given the following events and conditions:

- "B" essential train components are in service.

The Test Group Supervisor comes to you the Control Room SRO and wants to perform valve stoke testing.

For which one of the following valves would you ***NOT*** allow testing?

A. 1RN-1 (LLI Supply to RN)

B. 2RN-40A (Train A to Non- Ess Hdr Isol)

C. 0RN-7A (Train 1A & 2A SNSWP Supply)

D. 2RN-64A (AB Non-Ess Return Isol)

Bank Question: 1171 ***Answer: A***

1 Pt. Unit 2 is operating at 100 % power. Given the following events and conditions:

- "B" essential train components are in service.

The Test Group Supervisor comes to you the Control Room SRO and wants to perform valve stoke testing.

Which one of the following valves would you ***NOT*** allow testing?

A. 1RN-1 (LLI Supply to RN)

B. 2RN-40A (Train A to Non- Ess Hdr Isol)

C. 0RN-7A (Train 1A & 2A SNSWP Supply)

D. 2RN-64A (AB Non-Ess Return Isol)

Distracter Analysis: The only valve that will cause an operational concern would be closing 1RN-1. This would isolate the suction to the running RN pump.

A. **Correct**:
B. **Incorrect**: 'B" train components would still be supplied if this valve was closed.
Plausible:
C. **Incorrect**: This is a suction valve from the SNSWP pond and opening and closing would not be an operational problem.
Plausible:
D. **Incorrect**: This is a normally closed valve so opening and reclosing is not an issue.
Plausible:

Level: SRO Only

KA: APE 000062 AA2.02 (2.9/3.6)

Lesson Plan Objective: PSS-RN Obj 8

Source: McGuire Bank NRC Exam 2003

Level of knowledge: Comprehension

References:
1. OP-MC-PSS-RN pages 27, 39, 61, 75

APE: 062 Loss of Nuclear Service Water

AK1. **Knowledge of the operational implications of the following concepts as they apply to Loss of Nuclear Service Water:**
(CFR 41.8 / 41.10 / 45.3)

None

AK2. **Knowledge of the interrelations between the Loss of Nuclear Service Water and the following:**
(CFR 41.7 / 45.7)

None

AK3. **Knowledge of the reasons for the following responses as they apply to the Loss of Nuclear Service Water:**
(CFR 41.4, 41.8 / 45.7)

AK3.01	The conditions that will initiate the automatic opening and closing of the SWS isolation valves to the nuclear service water coolers	3.2*	3.5*
AK3.02	The automatic actions (alignments) within the nuclear service water resulting from the actuation of the ESFAS	3.6	3.9
AK3.03	Guidance actions contained in EOP for Loss of nuclear service water	4.0	4.2
AK3.04	Effect on the nuclear service water discharge flow header of a loss of CCW	3.5	3.7

AA1. **Ability to operate and / or monitor the following as they apply to the Loss of Nuclear Service Water (SWS):**
(CFR 41.7 / 45.5 / 45.6)

AA1.01	Nuclear service water temperature indications	3.1	3.1
AA1.02	Loads on the SWS in the control room	3.2	3.3
AA1.03	SWS as a backup to the CCWS	3.6*	3.6
AA1.04	CRDM high-temperature alarm system	2.7*	2.8
AA1.05	The CCWS surge tank, including level control and level alarms, and radiation alarm	3.1	3.1
AA1.06	Control of flow rates to components cooled by the SWS	2.9	2.9
AA1.07	Flow rates to the components and systems that are serviced by the SWS; interactions among the components	2.9	3.0

AA2. **Ability to determine and interpret the following as they apply to the Loss of Nuclear Service Water:**
(CFR: 43.5 / 45.13)

AA2.01	Location of a leak in the SWS	2.9	3.5
AA2.02	The cause of possible SWS loss	2.9	3.6
AA2.03	The valve lineups necessary to restart the SWS while bypassing the portion of the system causing the abnormal condition	2.6	2.9
AA2.04	The normal values and upper limits for the temperatures of the components cooled by SWS	2.5	2.9*
AA2.05	The normal values for SWS-header flow rate and the flow rates to the components cooled by the SWS	2.4*	2.5*
AA2.06	The length of time after the loss of SWS flow to a component before that component may be damaged	2.8*	3.1*

OBJECTIVES

	OBJECTIVE	NLO	NLOR	LPRO	LPSO	LOR
8	Describe the RN System Flow path (suction source, essential and non-essential header alignment and discharge point) for the following:					
	• Normal operation	X	X	X	X	
	• Operation following a Blackout	X	X	X	X	X
	• Operation following a Safety Injection	X	X	X	X	X
9	Explain the reason for taking a suction on the low level intake.	X	X	X	X	
10	Concerning the RN essential and non-essential headers:					
	• List the loads supplied by each header	X	X	X	X	
	• Identify which loads are automatically supplied on a Blackout, Safety injection and/or Phase B.	X	X	X	X	X
11	Explain the reason for **NOT** isolating the auxiliary building non-essential header on a Blackout signal.	X	X	X	X	X
12	Describe the operation including any interlocks for the following valves:		X	X	X	X
	• RN42A (AB Non Ess Supply Isol)					
	• RN-70A (171B) (A(B) D/G Supply Isol)					
	• 1RN1 (Low Level Intake Isolation)					
	• Engineering Safeguards Modulating Control Valves and Reset Circuitry					
13	Given a parameter associated with the RN system, describe the indications for that parameter.	X	X	X	X	
14	Given a Limit and Precaution associated with the RN System, discuss its basis and when it applies.		X	X	X	X

Automatic actions: -

1. Initiates automatic backwash
2. Resets the 120 hour timer

Immediate Actions:

1. IF RN strainer fails to backwash in "AUTO", refer to OP/1or2/A/6400 /06 for manual backwash
2. IF due to excessive flow, investigate and correct as necessary.

2.3 Suction Paths

Objective # 8,9

The RN System has three **suction sources**:

- Low Level Intake (LLI) through 1RN-1
- SNSWP
- RC crossover.

The **LLI** is the normal source of water to the RN pumps. This source comes from a single line located at a low point out from the dam and is isolated by and/or supplied to both units by 1RN-1 (LLI Supply to RN) **(refer to Drawing 7.5)**. This source provides cooler water for heat sink purposes and helps minimize the buildup of Asiatic clams in the RN System piping since they do not live in water with a low oxygen concentration.

The **SNSWP** is a backup supply in the event of a loss of Lake Norman. It is automatically aligned to train "B" on a Blackout or Safety Injection signal. If the SNSWP is being used as a suction source, the discharge must also be back to the SNSWP to prevent draining the pond.

NOTE: Compensatory action is required when aligning "A" Train RN discharge to the SNSWP (PIR 0-M92-0074). Compensatory actions are not required when performing RN Valve Stroke Timing and Slave Relay Testing. Unit 1 and 2 TD CA pumps are degraded but will remain operable provided the respective Train B Essential supply to each TD CA pump remains operable. The required compensatory action is covered in OP/1/A/6400/06 Encl 4.5. To remind the operator of this requirement, the following control board tag is located by 0RN-149A:

"Opening 0RN-149A
(Excluding valve cycling)
May make TD CA inoperable.
Refer to and comply with
L&P in RN OP unless
aligning per EP/AP."

The **RC crossover supply** can supply each train but must be manually aligned by the operator. This source may be used if LLI is unavailable or if all four RN pumps are to be operated.

The KC HX Supply isolation Valves (RN-86A, 187B) have an AUTO/MANUAL mode select switch and an open/close pushbutton on MC11. The open/close pushbuttons are only operable when the mode switch is in the Manual position. If the mode select switch is in the AUTO position, the valve will auto open when the train related RN pump starts and will receive a signal to close when the train related RN pump is stopped. In either the AUTO or MANUAL mode of operation, these valves will automatically open upon receipt of a Blackout or Safety injection signal. Also, the Blackout and Safety injection signal is interlocked with the AUTO portion of the valve closure circuitry to prevent the valve from automatically closing while a Blackout or Safety injection signal is still present. The valves are normally selected to the AUTO mode.

Low Level intake isolation valve 1RN1 is a non-safety related MOV controlled from 1MC11 by a pushbutton which is covered to prevent operation of the valve except in an emergency. The valve is wired through two breakers in MCC SMXL. The breaker in compartment 3C is normally disconnected which allows power to the valve to be disconnected while still leaving control power available for position indication in the Control Room. Therefore in order to close 1RN1, power must be restored by reconnecting the breaker in MCC SMXL compartment 3C and using the manual close pushbutton. If maintenance activities require shifting RN suction to the RC cross over or SNSWP such that 1RN1 will be closed, compensatory action will be required for Train A to prevent specific valves from automatically re-aligning to LLI on a S_S or BO signal.

0RN-4AC (Train 1B & 2B RC Supply) and 0RN-148AC (Train 1A & 2A Disch to RC) will automatically open on SSF transfer. In addition to 0RN-4AC and 0RN148AC, valves 0RN-147AC, 0RN-283AC, 0RN-301AC, 0RN10AC, and 0RN12AC can be operated from the SSF. The RN controls and indications located in the Standby Shutdown Facility will be covered in Lesson plan OP-MC-CP-AD.

The **Train A(B) Engineering Safeguards Modulating Control Valve Reset** Pushbuttons and reset lights are located on the RN section of MC11. The modulating control valve circuitry controls the solenoids supplying air to selected safety related control valves. These control valves are normally controlled by other non-safety controllers and instrumentation. In order to prevent these non-safety controls from causing the control valves to assume an improper position after a safety event, these safety related solenoids valves will vent air off its control valve to cause it to assume its "safe" position. These solenoid valves de-energize upon receipt of a safety injection signal from the D/G load sequencer.

The modulating reset circuitry has a mechanical latching relay which will maintain the valves in their safe position after the safety injection signal is reset. To gain control of these valves, the safety injection signal must be reset and the operator must depress the train related modulating valve reset pushbutton. The indicating light is labeled "RESET" and is normally illuminated. Upon receipt of a Safety Injection Signal, the light will be off. Following reset of the latching relay, the light will illuminate. Failure of the fuse in the pushbutton circuit renders all modulating valves inoperable. PIP 0-M96-2018 in section 5.2 covers an operating experience associated with these fuses.

7.2 RN System Basic Layout (12/04/03)

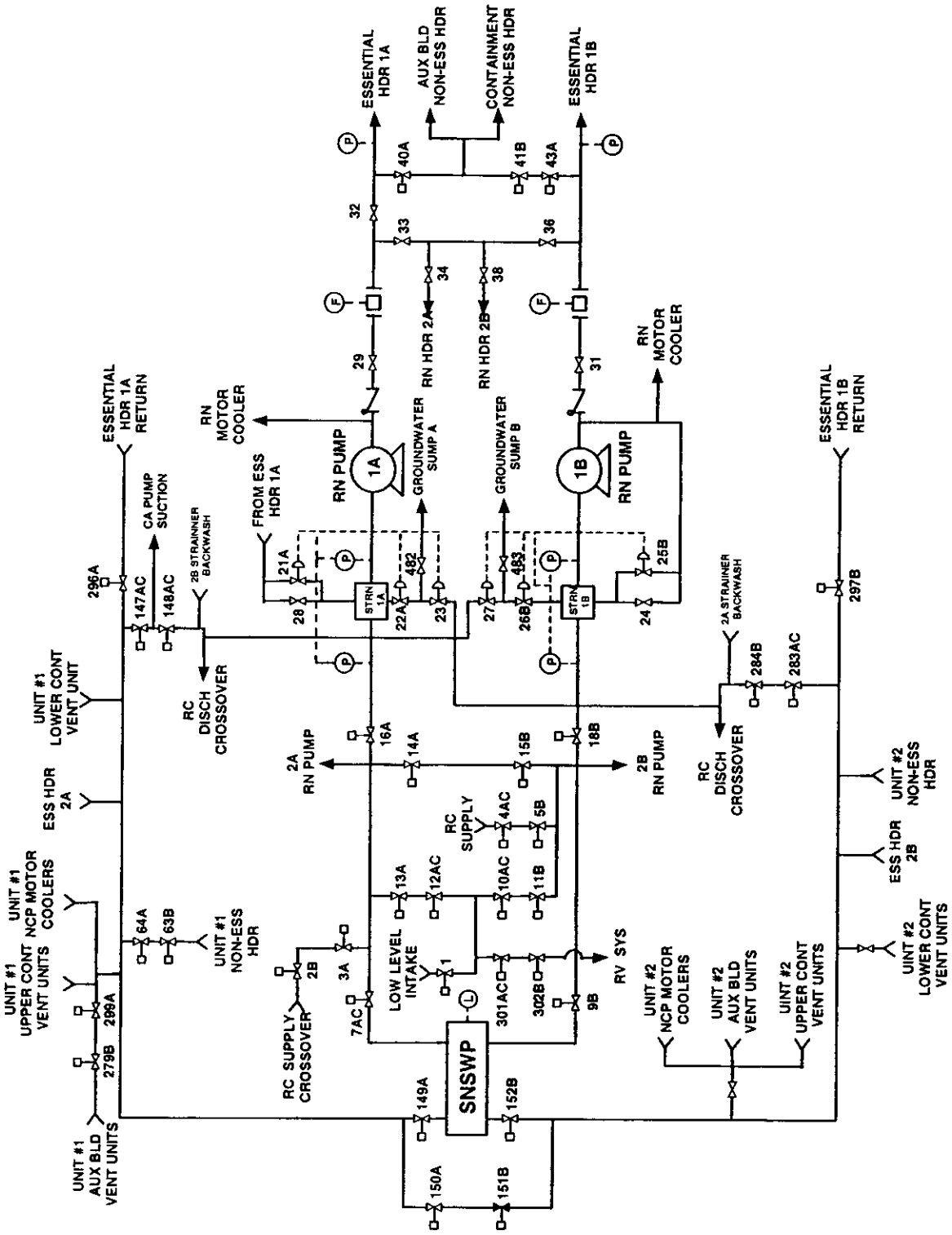

7.9 RN System Normal Train "B" Flowpath (12/04/03)

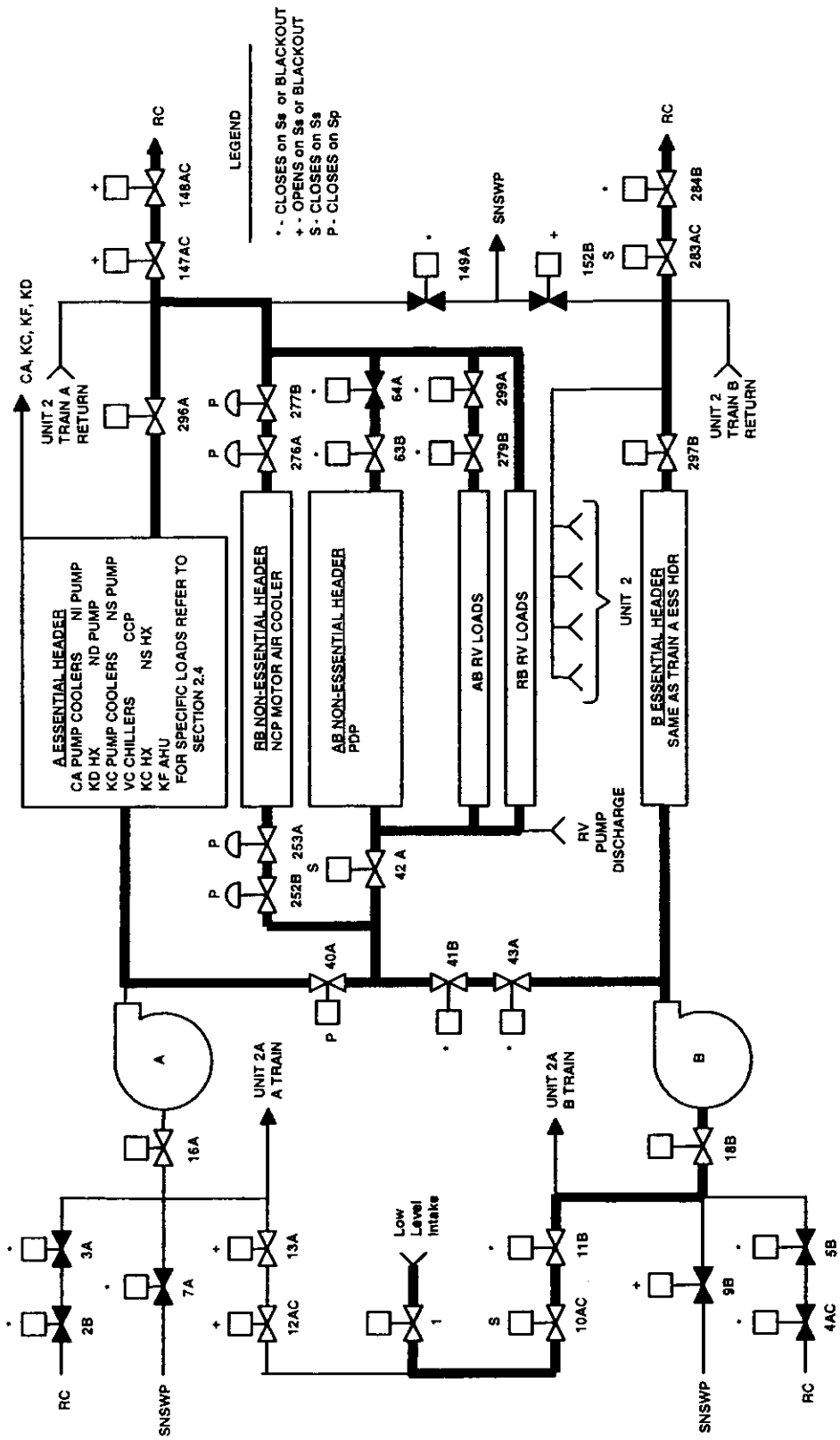

1 Pt. Unit 1 has experienced a loss of control room habitability. AP/1A/5500/017 (Loss of Control Room) has been implemented, and control has been established at the Auxiliary Shutdown Panel with normal operating temperature and pressure.

After control has been established a loss of Unit 1 offsite power occurs. The following trends are noted:

- reactor coolant temperature is 557 degrees and increasing
- reactor coolant system pressure is 2255 psig and increasing
- pressurizer level is 35% and increasing

As SRO at the Auxiliary Shutdown Panel, which of the following actions would you take to control the reactor coolant system pressure increase?

A. Use normal sprays to restore pressure to 2235 psig. utilizing AP-11

B. Dispatch an operator to open the breakers for 'C' and 'D' pressurizer heater groups.

C. Use NV auxiliary spray to restore pressure to 2235 psig utilizing AP-17

D. Dispatch an operator to open the breakers for 'A' and 'B' pressurizer heater groups. AP-11

---

2 2

Bank Question: 1172 ***Answer: C***

1 Pt. Unit 1 has experienced a loss of control room habitability. AP/1A/5500/017 (Loss of Control Room) has been implemented, and control has been established at the Auxiliary Shutdown Panel with normal operating temperature and pressure.

After control has been established a loss of Unit 1 offsite power occurs. The following trends are noted:

- reactor coolant temperature is 557 degrees and increasing
- reactor coolant system pressure is 2255 psig and increasing
- pressurizer level is 35% and increasing

As SRO at the Auxiliary Shutdown Panel which of the following actions would you take to control the reactor coolant system pressure increase?

A. Use normal sprays to restore pressure to 2235 psig.

B. Dispatch an operator to open the breakers for 'C' and 'D' pressurizer heater groups.

C. Use NV auxiliary spray to restore pressure to 2235 psig

D. Dispatch an operator to open the breakers for 'A' and 'B' pressurizer heater groups.

Distracter Analysis: The pressurizer high level function of energizing PZR heaters at +5% pressurizer level is disabled in "local control" when at the auxiliary shutdown panel.

A. **Incorrect**: the loss of offsite power will secure the NC pumps and normal spray will not be available
Plausible. Normal sprays are the usual way of lowering pressure

B. **Incorrect**: C' and 'D' pressurizer heater groups will be de-energized on a loss of offsite power
Plausible: the students may think 'C' and 'D' heaters are energized by the high level deviation

C. **Correct**:

D. **Incorrect**: the operator has local control of the 'A' and 'B' heater groups at the auxiliary shutdown panel. 'A' and 'B' heaters would not be on due to the 5% level deviation since the automatic function is disabled at the auxiliary shutdown panel.
Plausible: If the student thought the high level deviation was overriding the local control

Level: SRO Only. The alignment and operation of the Auxiliary Shutdown Panel is an SRO only function.

KA: APE 000068 AA2.06 (4.1/4.3)

Lesson Plan Objective: OP-MC-CP-ASP Obj. 2
OP-MC_CP-SS Obj. 6

Source: NEW

Level of knowledge: Analysis

References:
1. OP-MC_CP_ASP pages 11 and25
2. OP-MC-CP-SS page 17

APE:	068 Control Room Evacuation		
AA1.26	Unlocking of switches and operation of AFW valves	3.6*	3.8*
AA1.27	Local trip of main feed pumps and Condensate pumps	3.2*	3.4*
AA1.28	PZR level control and pressure control	3.8	4.0
AA1.29	Calculation of boron needed for xenon-free shutdown	3.1	3.6
AA1.30	Operation of the letdown system	3.4	3.6
AA1.31	ED/G	3.9	4.0
AA1.32	Natural circulation flow	3.9	4.1
AA2.	**Ability to determine and interpret the following as they apply to the Control Room Evacuation: (CFR: 43.5 / 45.13)**		
AA2.01	S/G level	4.0	4.3
AA2.02	Local boric acid flow	3.7*	4.2*
AA2.03	T-hot, T-cold, and in-core temperatures	4.0	4.2
AA2.04	S/G pressure	3.7	4.0
AA2.05	Availability of heat sink	4.2	4.3
AA2.06	RCS pressure	4.1	4.3
AA2.07	PZR level	4.1	4.3
AA2.08	S/G pressure	3.9	4.1
AA2.09	Saturation margin	4.1	4.3
AA2.10	Source range count rate	4.2*	4.4*
AA2.11	Indications of natural circulation	4.3	4.4

CLASSROOM TIME (Hours)

NLO	NLOR	LPRO	LPSO	LOR
1.0	1.0	1.0	1.0	1.0

OBJECTIVES

	OBJECTIVE	NLO	NLOR	LPRO	LPSO	LOR
1.	State the purpose of the Auxiliary Shutdown Panels.	X	X	X	X	
2.	Describe the controls and indications associated with the Auxiliary Shutdown Panels.	X	X	X	X	X
3	State the purpose of the control room/local switches	X	X	X	X	
4	State the purpose of the STATUS position on certain control room/local switches	X	X	X	X	X
5	State the purpose of the breakglass mounted on each panel			X	X	X
6	Describe how control room personnel will know if one of the Auxiliary Shutdown Panels is open.	X	X	X	X	X
7	Concerning the Technical Specifications related to the Remote Shutdown Instrumentation:					
	• Given the LCO title, state the LCO (including any COLR values) and applicability.			X	X	X
	• For any LCO's that have action required within one hour, state the action.			X	X	X
	• Given a set of parameter values or system conditions, determine if any Tech. Spec. LCO's is (are) not met and any action(s) required within one hour.			X	X	X
	• Given a set of plant parameters or system conditions and the appropriate Tech. Specs., determine the required action(s).			X	X	X
	• Discuss the bases for a given Tech. Spec. LCO or Safety Limit				X	*
	* SRO ONLY					

2.0 COMPONENT DESCRIPTION

2.1. Panel Indications (Refer to Drawings 7.1, 7.2, 7.3, & 7.4)

2.1.1. Temperature indications (all temperature indication is continuous)

- Reactor Coolant System Wide Range Hot Leg Temperature (0-700°F) Loop D Hot Leg
- Reactor Coolant System Wide Range Cold Leg Temperature (0-700) Loop D Cold Leg
- Regenerative Heat Exchanger Letdown Temperature (100-600)
- A & B ND Pump Discharge Temperature (50-400°F)
- A, B, C, & D ND to Cold Leg Temperatures (50-400°F)

2.1.2. Pressure Indications (all pressure indication is continuous)

- Wide Range Reactor Coolant System Pressure (0-3000 psig)
- Narrow Range Reactor Coolant System Pressure (PZR Press) (1700-2500 psig)
- Letdown Pressure (0-600 psig)

2.1.3. Level Indications (continuous)

- Channel 1 Pressurizer Level (0-100%)

2.1.4. Flow Indications (continuous)

- Letdown Flow (0-200 gpm)

2.1.5. Power Indication (continuous)

- SR Nuclear Flux (10^{-1} - 10^{5} cps, separately detected, not part of the NIS)

2.2. Manual Loaders on the Panel

2.2.1. NV-459 (NC to NV Letdown Isolation)

It is used to throttle letdown flow rate when initiating letdown. Throttling prevents thermal shock of the letdown piping by allowing the operator to slowly initiate letdown. Per procedures, excess letdown is established if normal letdown is not in service.

2.2.2. NV-21A (NV to Pressurizer Auxiliary Spray Control)

It is used to control NC System pressure if the normal spray valves are unavailable or not functioning properly (**Note:** the normal spray valves should be operating in Auto, and no control of them on the ASP). It's used on the ASP for NC System pressure control during cooldown. Letdown **must** be in service before this valve can be used. This is to ensure the ΔT between the Pressurizer Temperature and Spray Water is less than 320°F, which aids in preventing thermally shocking the spray nozzle. When NV-21 is being used, valves NV-13B and 16A must be closed (Normal and Alternate Charging) which allows the operator to maintain a more constant letdown and charging flow balance.

7.1 Unit 1 Auxiliary Shutdown Panel (ASP) (7/23/01)

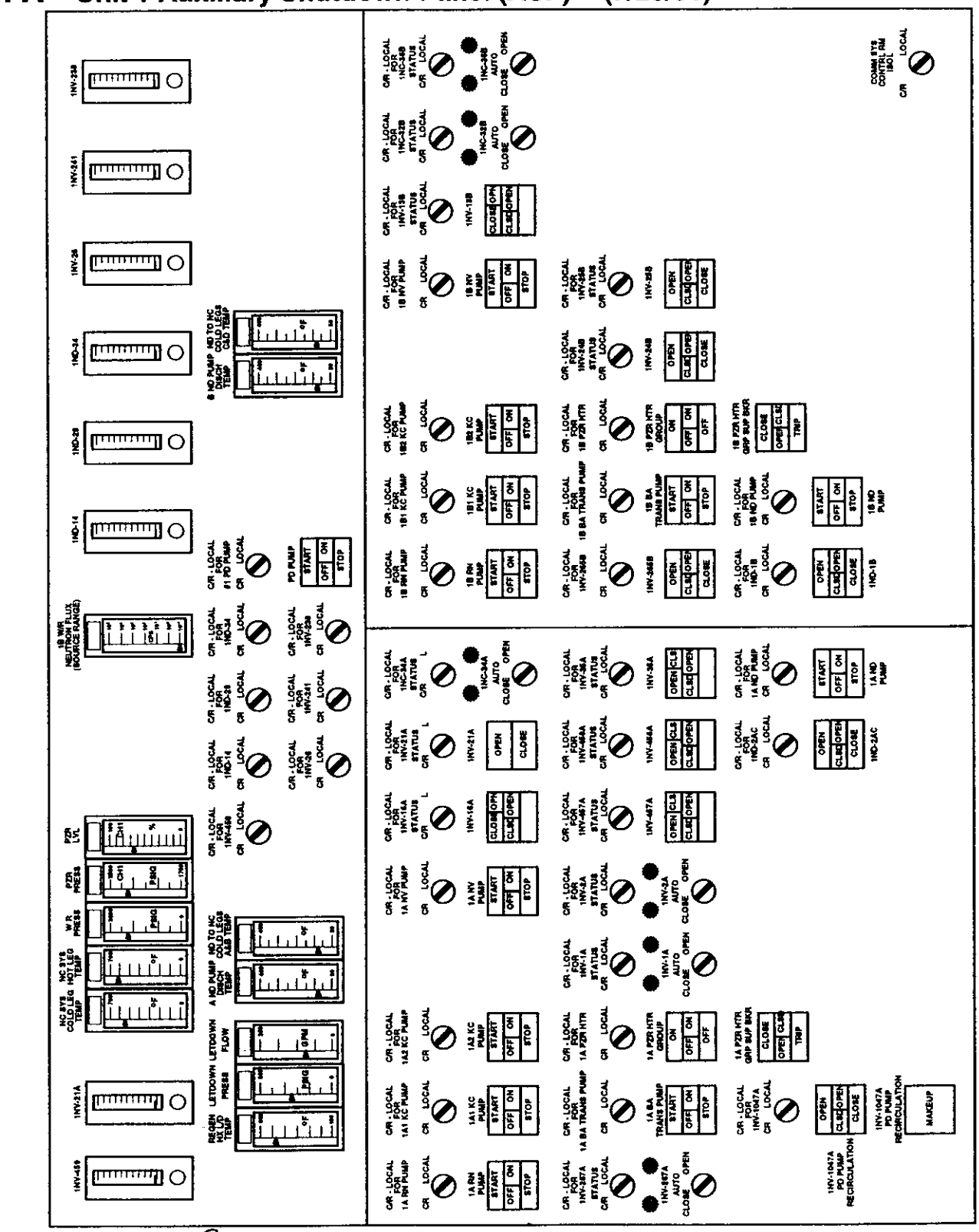

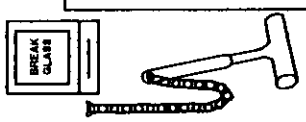

CLASSROOM TIME (Hours)

NLO	NLOR	LPRO	LPSO	LOR
2.0	2.0	2.0	2.0	2.0

OBJECTIVES

	OBJECTIVE	NLO	NLOR	LPRO	LPSO	LOR
1.	Explain how Hot Standby conditions are achieved and maintained with operation from the ASP	X	X	X	X	X
2.	Explain how Hot Standby conditions are achieved and maintained with operation from the SSF.	X	X	X	X	X
3.	Explain how Cold Shutdown conditions are achieved following a Loss of Control Room.	X	X	X	X	X
4.	Explain how Cold Shutdown conditions are achieved following a Loss Plant Control due to a fire or sabotage.	X	X	X	X	X
5.	Explain how a Heat Sink is assured for the NCS during SSF operation.	X	X	X	X	X
6.	Given a limit and/or precaution associated with an Operating Procedure, discuss it's basis and applicability.			X	X	X

IF engine is idled continuously for greater than 30 minutes, System Engineer recommends operation greater than 600 KW for one hour.

BASIS: Blow carbon from injector tips.

Maximum D/G load is 750 KW.

BASIS: Prevent exceeding the KVA rating of 875 (note @ a 0.9 power factor that would be 787 KW).

Any spills shall be addressed per RP/0/A/5700/022 (Spill/Incident Response Procedure).

BASIS: Just a cue.

3.2. Abnormal and Emergency Operation

Objective #1

3.2.1. AP/1or2/A/5500/17, Loss of Control Room

Refer to Drawing 7.1. In general, AP/17 is used when the control room needs to be evacuated, but the controls needed for safe shutdown are not damaged. The Operators go to their assigned places, establish communication with the ASP, and **then** perform the actions to place the unit in Hot Standby. Basically, this consist of transferring control to the ASP and CA Panels, checking if the CR still needs to be evacuated, and if so; tripping the reactor and turbine, establishing temperature, pressure, and inventory control of the NCS, and establishing a heat sink.

Objective #6

Limits and Precautions

The Operator at the reactor trip breakers shall not trip the reactor until directed to do so by the SRO at the ASP. This ensures control is established at the ASP **before** placing the plant in a transient.

The Operator at the main turbine shall not trip the turbine until directed to do so by the SRO at the ASP. Again, to ensure control is established prior to placing the plant in a transient.

While in 'LOCAL', 1A and 1B Pzr Htr Groups will not cycle to maintain Pzr pressure and will not trip on low Pzr level. Because going to local control cuts out the control room normal control circuits, the Operator is reminded to cycle heaters manually, as necessary, to control pressure, and to watch out for low Pzr level to avoid damaging the heaters.

Throttling 1NV-238 fully closed will isolate seal injection flow.

1 Pt(s) Unit 1 was operating at 100% power. Given the following events and conditions:

- 1EMF-48 (Reactor Coolant Hi Rad) trip 2 alarm
- 1EMF-18 (Reactor Coolant Filter 1A) trip 2 alarm
- Chemistry has determined that the high activity in the Reactor Coolant System is due to failed fuel.

Which one of the following actions is required to reduce coolant activity due to failed fuel in the NC system?

A. **Implement AP/1/A/5500/46 (Abnormal Primary or Secondary Chemistry) and purge the VCT with nitrogen**

B. **Implement AP/1/A/5500/18 (High Activity in Reactor Coolant) and evaluate placing cation bed demineralizer in service**

C. **Implement AP/1/A/5500/18 (High Activity in Reactor Coolant) and increase letdown flow to 120 gpm**

D. **Implement AP/1/A/5500/46 (Abnormal Primary or Secondary Chemistry and add hydrogen to the reactor coolant**

Bank Question: 1173 ***Answer: B***

1 Pt(s) Unit 1 was operating at 100% power. Given the following events and conditions:

- 1EMF-48 (Reactor Coolant Hi Rad) trip 2 alarm
- 1EMF-18 (Reactor Coolant Filter 1A) trip 2 alarm
- Chemistry has determined that the high activity in the Reactor Coolant System is due to failed fuel.

Which one of the following actions is required to reduce coolant activity due to failed fuel in the NC system?

A. **Implement AP/1/A/5500/46 (Abnormal Primary or Secondary Chemistry) and purge the VCT with nitrogen**

B. **Implement AP/1/A/5500/18 (High Activity in Reactor Coolant) and evaluate placing cation bed demineralizer in service**

C. **Implement AP/1/A/5500/18 (High Activity in Reactor Coolant) and increase letdown flow to 120 gpm**

D. **Implement AP/1/A/5500/46 (Abnormal Primary or Secondary Chemistry and add hydrogen to the reactor coolant**

Distracter Analysis:

A. **Incorrect**: Will not correct a high NC activity from a crud burst
Plausible: One of the subsequent actions in AP/18 is to purge the VCT to the waste gas system with Hydrogen. In addition, Nitrogen is used to purge the VCT for shutdown. It is likely that a candidate could mix up these purges. AP/46 is not the correct AP

B. **Correct**:

C. **Incorrect**: High activity is not corrected by increasing letdown flow the mixed med demineralizers.

D. **Incorrect**: Will not remove crud burst particulate activity
Plausible: Used to scavenge Oxygen from the NC coolant and thus reduce the corrosion rates and crud production in the RCS. However, this does not affect crud burst particulates that are already in the NC system coolant. AP/46 is not the correct AP.

Level: SRO Only. 10CFR55.43 (5) The decision to implement a specific AP is an SRO function. ROs would know symptoms of high reactor coolant activity but it is not their responsibility to determine which AP to implement.

KA: APE 000076 AA 2.02 (2.8/3.4)

Source: Bank Modified NRC Exam 2000

Level of Knowledge: Memory

Lesson Plan: OP-MC-CH-PC
AP/18 Background Document

Lesson Plan Objectives: OP-MC-CH-PC Obj. 7
AP/18 Background Document Obj. 2

References:
1. OP-MC-CH-PC page 39
2. AP/18 Background Document page 4
3. AP/1/A/5500/18 High Activity in the Reactor Coolant page 3

APE: **076 High Reactor Coolant Activity**

ABILITY

AA1. **Ability to operate and / or monitor the following as they apply to the High Reactor Coolant Activity: (CFR 41.7 / 45.5 / 45.6)**

AA1.01	Interlocks associated with orifice isolation valve	2.4	2.2
AA1.02	CCWS standby pump and outlet valves	2.1	2.0
AA1.03	CVCS letdown flow rate and temperature	2.3*	2.1
AA1.04	Failed fuel-monitoring equipment	3.2	3.4

AA2. **Ability to determine and interpret the following as they apply to the High Reactor Coolant Activity: (CFR: 43.5 / 45.13)**

AA2.01	Location or process point that is causing an alarm	2.7	3.2
AA2.02	Corrective actions required for high fission product activity in RCS	2.8	3.4
AA2.03	RCS radioactivity level meter	2.5	3.0
AA2.04	Process effluent radiation chart recorder	2.6	3.0
AA2.05	CVCS letdown flow rate indication	2.2	2.5
AA2.06	Response of PZR LCS to changes in the letdown flow rate	2.2	2.5
AA2.07	When demineralizer resin needs to be replaced	2.4	2.7*

SEQ	OBJECTIVE	NLO	NLOR	LPRO	LPSO	LOR
7	Concerning demineralizer operation:					
	• State the purpose of the two types of demineralizers used, at McGuire Nuclear Station, for primary chemistry control.		X	X	X	X
	• Explain how unwanted ions are removed utilizing these demineralizers.		X	X	X	X
	• Describe the concern associated with high temperature (>140 °F) demineralizer operation.		X	X	X	X
	• Describe the reactivity effect caused by a change in letdown temperature.		X	X	X	X
	• Describe the reactivity effect caused by placing a previously isolated demineralizer in-service. CHPC007		X	X	X	X
8	Identify all the "Action Level" chemical parameters monitored during normal power operation and describe the expected plant response should a parameter(s) exceed an "Action Level" value (Action Level 1, 2, and /or 3). CHPC008		X	X	X	X
9	List the major chemical evolutions associated with normal plant *startup* and *shutdown*. CHPC009		X	X	X	X
10	Describe OPERATIONS role associated with the removal of oxygen from the NCS and associated tanks (VCT, NCDT, and PRT) during normal plant *startup*. CHPC010		X	X	X	X
11	Describe OPERATIONS role associated with crud burst activities and the removal of hydrogen (degas) from the NCS and associated tanks (VCT, NCDT, and PRT) during normal plant *shutdown*. CHPC011		X	X	X	X

Objective # 7

The NV Mixed Bed Demineralizers will remove both cation and anion impurities from the coolant and replace them with H^+ and OH^- ions. *For example; if letdown flow contains Sodium Chloride (Na^+ and Cl^-), the Sodium ion would be exchanged for a hydronium ion, the Chloride ion would be exchanged for a hydroxyl ion, and the effluent of the demineralizer would contain H^+ and OH^-.*

The NV Cation Demineralizer is used to remove excess Lithium and/or cation fission products (e.g., Cs-134, Cs-137) resulting from fuel defect(s). *The demineralizer is charged with hydronium based cation resin (H^+R). Any cation that is present in the letdown flow (including Lithium and Cesium) will be removed and hydronium ions will replace it.*

The ability of a resin bead to remove a given ion (either radioactive or non-radioactive) is measured by its Decontamination Factor (DF).

$$DF = \frac{\text{Influent Concentration}}{\text{Effluent Concentration}}$$

The DF for a fresh resin bed is typically greater than 100. The DF for depleted resin bed is typically less than 10. When a resin bed is 80 - 90% depleted, impurities (ions) can be detected in the effluent and resin replacement is required.

One of our Mixed Bed Demineralizers, is designated as the "STANDBY" Mixed Bed Demineralizer. The "STANDBY" Mixed Bed Demineralizer is gradually introduced to primary coolant for the purposes of "lithium saturation". This is preferably done while trying to reduce lithium concentration; thereby reducing lithium concentration while preparing the Mixed Bed Demineralizer for service later on.

Resin beds should not be operated at temperatures in excess of 140 °F because the resin beads are organic in nature and will break down at high temperatures, releasing trapped ions.

Resin beds should not be operated with excessive flow rates as this will tend to channel the resin bed and cause a loss of ion exchange and filtration efficiency.

CLASSROOM TIME (Hours)

NLO	NLOR	LPRO	LPSO	LOR
		2	2	1

OBJECTIVES

	OBJECTIVE	NLO	NLOR	LPRO	LPSO	LOR
1	Explain the purpose for AP/18 High Activity in Reactor Coolant). AP18001			X	X	X
2	Analyze the mitigating strategy (major actions) contained in the procedure. AP18002			X	X	X
3	Given scenarios describing accident events and plant conditions, evaluate the basis for any caution, note, or step. AP18003			X	X	X
4	Given scenarios describing accident events and plant conditions, evaluate conditions which require application of continuous action steps. AP18004			X	X	X

STEP 3:

PURPOSE:

Reduce redeposition of crud throughout the plant.

DISCUSSION:

At the normal letdown flow rate of 75 gpm, it takes almost 21 hours to pass one entire volume of reactor coolant through the NV System. But a letdown flow of 120 gpm will circulate one entire volume of reactor coolant in approximately 12 hours (at 120 gpm letdown flow, 50% of the crud is removed every 12 hours).

REFERENCES:
Primary Chemistry Lesson Plan OP-MC-CH-PC

STEP 4:

PURPOSE:

To clean up high activity associated with failed fuel and ensure appropriate classification of emergency is made.

DISCUSSION:

Step 4.a ensures mixed bed demin in service to facilitate removal of both the ion types produced by failed fuel (halogens and soluble metal ions).

Step 4.b notifies Chemistry to determine if the cation bed should be placed in service so they can get with Reactor Group, RP, and themselves to weigh the pros and cons of placing the cation bed in service. While the cation will remove the soluble metal ions like Cesium, in doing so it will also remove the Lithium ion that is used for PH control. Operating with PH out of spec must be weighed against the urgency of removing the failed fuel ions (dose control, etc.)

Step 4.c gets the cation bed in serivce, if requested using the OP.

Step 4.d is a reference to RP/0/A/5700/000 (Classification of Emergency) to ensure the proper declaration is made. If a plant shutdown required by T.S. 3.4.16 (RCS Specific Activity) is commenced, a Notification of Unusual Event is declared based on failed fuel. For grosser failures beyond the T.S. limits, other classification levels may be reached.

Step 4.e is a quick gross guess at the extent of the failed fuel. The Reactor Group has more qualitative tools that they'll implement as warranted, but this is a quick estimate. Basically, this procedure takes the I-131 concentration in uCI/ml and divides by a number depending on initial conditions (normal, clad damage, severe fuel overtemperature, or fuel melting), with correction factors for sampling temperature and power history:

A. Normal:	I-131 uCI/ml ÷ 1.8 uCI/ml = Percent failed fuel
B. Clad damage	I-131 uCI/ml ÷ 83.7 uCI/ml = Percent failed fuel
C. Severe Fuel Overtemperature	I-131 uCI/ml ÷ 1535 uCI/ml = Percent failed fuel
D. Fuel Melting	I-131 uCI/ml ÷ 2790 uCI/ml = Percent failed fuel

As seen above, the more the fuel cladding is stressed by the failed fuel mechanism, the more activity is expected for a given percentage of failed fuel.

REFERENCES:
RP/0/A/5700/000 (Classification of Emergency), OP/0/A/6550/17 (Estimate of Failed Fuel Based on Iodine-131)

ACTION/EXPECTED RESPONSE	RESPONSE NOT OBTAINED
4. **IF AT ANY TIME it is determined that high activity is from failed fuel, THEN:**	
__ a. Ensure mixed bed demineralizer in service.	
__ b. Notify Chemistry to consult with Reactor Group and RP to determine if the cation bed demineralizer should be placed in service.	
__ c. **IF AT ANY TIME** Chemistry requests cation bed demineralizer be placed in service, **THEN** place in service **PER** OP/1/A/6200/001D (Chemical and Volume Control System Demineralizers), Enclosure 4.3 (Removing/Returning the Cation Bed Demineralizer From/To Service).	
__ d. **REFER TO** RP/0/A/5700/000 (Classification of Emergency).	
__ e. Notify Reactor Group to perform OP/0/A/6550/017, (Estimate of Failed Fuel Based on Iodine-131 Concentration).	
__ 5. **Notify Radwaste to ensure VCT H_2 purge flow is established.**	
__ 6. **REFER TO Tech Spec 3.4.16 (RCS Specific Activity).**	

END

Bank Question: 307.1 ***Answer: C***

1 Pt(s) Unit 1 was operating at 100% power when a crud burst occurred. Given the following events and conditions:

- 1EMF-48 (Reactor Coolant Hi Rad) Trip 2 alarm
- 1EMF-18 (Reactor Coolant Filter 1A) Trip 2 alarm

Which one of the following actions per AP/1/A/5500/18 (Activity in the Reactor Coolant System) is required to reduce coolant activity due to a crud burst in the NC system? (Assume no clad damage has occurred.)

A. Purge the VCT with nitrogen

B. Place/ensure both mixed bed demineralizers are in service

C. Increase letdown flow

D. Add hydrogen to the reactor coolant

Distracter Analysis:

A. **Incorrect**: Will not correct a high NC activity from a crud burst
Plausible: One of the subsequent actions in AP/18 is to purge the VCT to the waste gas system with Hydrogen. In addition, Nitrogen is used to purge the VCT for shutdown. It is likely that a candidate could mix up these purges.

B. **Incorrect**: Do not want to load crud particles into BOTH mixed bed demineralizers
Plausible: Mixed bed demins will filter crud particles and remove fission product ionic impurities - this action required for fuel element failure/high fission product activity in AP/18 - but not for crud burst

C. **Correct**: Will increase removal rate of crud particles by increased filtration.

D. **Incorrect**: Will not remove crud burst particulate activity
Plausible: Used to scavenge Oxygen from the NC coolant and thus reduce the corrosion rates and crud production in the RCS. However, this does not affect crud burst particulates that are already in the NC system coolant.

Level: SRO ONLY 10CFR50.43

KA: 076 AA2.03 (2.5/3.0)

Source: BANK

Level of Knowledge: Memory

Lesson Plan Objective: OP-MC-CH-PC Obj.12

Reference:
1. AP/1/A/5500/18 page 2
2. OP-MC-CH-PC pages 73 and 75

1 Pt(s) Unit 1 is in the process of shutting down due to both trains of Hydrogen Igniters not functional as the result of a common mode failure. A LOCA occurs on Unit 1. EP/1/A/5000/FR-Z.1 (Response to High Containment Pressure) has been implemented.

During the LOCA the following conditions were noted:

- ECCS was only partially successful
- Significant core uncovery had occurred
- H_2 Analyzers have been placed in service
- Containment H_2 concentration is 6.7%

Which one of the following is the appropriate strategy for addressing the high Containment H_2 and WHY is this strategy preferred over other potential strategies?

A. Place the H_2 Recombiners in service
Does not cause an offsite release

B. Place the H_2 Recombiners in service
As the Steam/H_2 ratio increases, "quenching" will occur

C. Place the H_2 Purge System in service when directed by TSC
Does not cause an offsite release

D. Place the H_2 Purge System in service when directed by TSC
Does not cause an uncontrolled H_2 burn pressure spike

Bank Question: 1174 ***Answer: D***

1 Pt(s) Unit 1 is in the process of shutting down due to both trains of Hydrogen Igniters not functional as the result of a common mode failure. A LOCA occurs on Unit 1. EP/1/A/5000/FR-Z.1 (Response to High Containment Pressure) has been implemented.

During the LOCA the following conditions were noted:

- ECCS was only partially successful
- Significant core uncovery had occurred
- H_2 Analyzers have been placed in service
- Containment H_2 concentration is 6.7%

Which one of the following is the appropriate strategy for addressing the high Containment H_2 and why is this strategy preferred over other potential strategies?

A. **Place the H_2 Recombiners in service**
Does not cause an offsite release

B. **Place the H_2 Recombiners in service**
As the Steam/H_2 ratio increases, "quenching" will occur

C. **Place the H_2 Purge System in service when directed by TSC**
Does not cause an offsite release

D. **Place the H_2 Purge System in service when directed by TSC**
Does not cause an uncontrolled H_2 burn pressure spike

Distracter Analysis: The H_2 concentration is in excess of flame propagation/explosion limits so the H_2 Recombiners (ignition source) would be inappropriate. After off-site dose evaluated by the TSC, the H_2 eventually would have to be reduced to < 6.0% by purge, before the Recombiners are allowed to be used.

A. **Incorrect:** The procedure does not allow this because of the concern with a pressure spike caused by a H_2 burn. Also, Recombiner damage is likely.
Plausible: The recombiners do have the advantage of not resulting in an off-site release.

B. **Incorrect:** The procedure does not allow this because of the concern with a pressure spike caused by a H_2 burn.
Plausible: The Recombiners would reduce the H_2 concentration but the concern with a H_2 burn is over-ridding.

C. **Incorrect:** This strategy would result in an off-site release.
Plausible: This is the correct strategy, but not for the reason listed.

D. **Correct:**

Level: SRO Only There is no clear procedure guidance on the correct strategy. The incorrect strategy (recombiners) is purposely avoided by the procedure if H_2 is > 6%. At this point the procedure asks for station management guidance. An SRO would be expected to know why the H_2 Purge strategy is the one and only viable option in this scenario, even though it could result in significant off-site doses.

KA: 000028 A2.03 (3.4/4.0)

Lesson Plan Objective: OP-MC-EP-FRZ, obj 4
OP-MC-CNT-VE, obj 11

Source: NEW

Level of knowledge: Analysis

References:
1. Lesson Plan OP-MC-EP-FRZ, pg 31
OP-MC-CNT-VE, pg 19
2. EP/1/A/5000FR-Z.1, page 11

SYSTEM: **028 Hydrogen Recombiner and Purge Control System (HRPS)**

K/A NO.	ABILITY	IMPORTANCE RO	IMPORTANCE SRO
A1	**Ability to predict and/or monitor changes in parameter (to prevent exceeding design limits) associated with operating the HRPS controls including:** (CFR: 41.5 / 45.5)		
A1.01	Hydrogen concentration	3.4	3.8
A1.02	Containment pressure	3.4*	3.7*
A2	**Malfunctions or operations on the HRPS; and (b) based on those predictions, use procedures to correct, control or mitigate the consequences of those malfunctions or operations:** (CFR: 41.5 / 43.5 / 45.3 / 45.13)		
A2.01	Hydrogen recombiner power setting, determined by using plant data book	3.4*	3.6*
A2.02	LOCA condition and related concern over hydrogen	3.5	3.9
A2.03	The hydrogen air concentration in excess of limit flame propagation or detonation with resulting equipment damage in containment	3.4	4.0
A3	**Ability to monitor automatic operation of the HRPS, including:**		
	None		
A4	**Ability to manually operate and/or monitor in the control room:** (CFR: 41.7 / 45.5 to 45.8)		
A4.01	HRPS controls	4.0*	4.0*
A4.02	Location and interpretation of containment pressure indications	3.7*	3.9
A4.03	Location and operation of hydrogen sampling and analysis of containment atmosphere, including alarms and indications	3.1	3.3

CLASSROOM TIME (Hours)

NLO	NLOR	LPRO	LPSO	LOR
		0.5	0.5	0.5

OBJECTIVES

SEQ	OBJECTIVE	NLO	NLOR	LPRO	LPSO	LOR
1	Explain the purpose of each procedure in the FR-Z series.			X	X	
2	Discuss the entry and exit guidance for each procedure in the FR-Z series.			X	X	
3	Discuss the mitigating strategy (major actions) of each procedure in the FR-Z series.			X	X	X
4	Discuss the basis for any note, caution or step for each procedure in the FR-Z series.			X	X	X
5	Given the Foldout page, discuss the actions included and the basis for these actions.			X	X	X
6	Given the appropriate procedure, evaluate a given scenario describing accident events and plant conditions to determine any required action and its basis.			X	X	X
7	Discuss the time critical task(s) associated with the FR-Z series procedures including the time requirements and the basis for these requirements.			X	X	X

OBJECTIVES

	OBJECTIVE	NLO	NLOR	LPRO	LPSO	LOR
10	Explain the operation of the recirculation and exhaust dampers, including setpoints.	X	X	X	X	X
11	Explain the relationship between the Annulus Ventilation System and the Hydrogen Purge System during a hydrogen purge after a LOCA.	X	X	X	X	X
12	Describe the VE Local Panel indications.	X	X	X	X	X
13	Given a Limit and/or Precaution associated with an operating procedure, discuss its basis and applicability.		X	X	X	X
14	Concerning the Technical Specifications related to the VE System:					
	• Given the LCO title, state the LCO (including any COLR values) and applicability.			X	X	X
	• For any LCO's that have action required within one hour, state the action.			X	X	X
	• Given a set of parameter values or system conditions, determine if any Tech. Spec. LCO's is (are) not met and any action(s) required within one hour.			X	X	X
	• Given a set of parameter values or system conditions and the appropriate Tech Spec, determine required action(s)			X	X	X
	• Discus the bases for a given Tech. Spec. LCO or Safety Limit				X	*
	* SRO ONLY					

STEP 15 Check containment H_2 concentration:

PURPOSE: To check if an excessive containment hydrogen concentration is present.

BASIS: This step instructs the operator to obtain a current hydrogen concentration measurement. Dependent upon the magnitude of the hydrogen concentration, the operator will either obtain a recommendation from management to reduce hydrogen concentration or place the recombiners in service. Once the concentration has been obtained, the operator is directed to continue in this procedure.

When inadequate core cooling has occurred, the containment hydrogen concentration may be as much as 10 to 12 volume percent, depending on the amount of metal-water reaction that has occurred in the core. The hydrogen concentration is of concern since a flammable mixture can cause a sudden rise in containment pressure which may challenge containment integrity. Note that in order to have the potential for flammable hydrogen concentrations, an inadequate core cooling situation must have already existed. Without this situation, sufficient hydrogen would not be expected to have been produced to cause flammable mixtures.

If the hydrogen mixture is between 0.5 volume percent and 6.0 volume percent in dry air, either no hydrogen burn is possible or a limited burn may occur which does not produce a significant pressure rise. In this case the operator is instructed to start the hydrogen recombiner system and igniters to reduce containment hydrogen concentration. If the hydrogen concentration is less than 0.5 volume percent in dry air, a flammable situation is not imminent and the operator continues with FR-Z.1. If the concentration is greater than 6.0 volume percent in dry air, station management is notified for additional recovery actions while proceeding with the procedure.

All hydrogen measurements are referenced to concentrations in dry air even though the actual containment environment may contain significant steam concentrations. There are two reasons for this - first, most hydrogen measurement systems remove moisture from the sample thus approximating a dry air condition, and second, the amount of hydrogen to reach flammability is greater when steam is present, thus the volume percent used in the procedure is conservative.

have a higher pressure at the top of the annulus than at the same location outside and this could result in out-leakage.

2.4. H_2 Purge Blower

Objective #11

The Containment H_2 Purge Blower supplies clean air to Containment while venting the air in Containment to the annulus for removal by the Annulus Ventilation System (refer to Drawing 7.1). This can be done to maintain Containment H_2 concentration < 4%. **The Annulus Ventilation System discharges the air to the unit vent through a filtration system.** The H_2 Purge Blower is a rotary positive displacement blower which delivers 100 cfm of outside air (from Auxiliary Building) into containment. It is driven by a 3 hp, 3600 rpm, 575 volt, 3 phase, 60 Hz motor, powered from MXN. This part of the VE System is NOT assumed in our design bases.

The Containment H_2 Purge Blower is manually placed in service and secured when the Technical Support Center (TSC) makes recommendations after an accident. The Start/Stop switch for the blower is located on the Control Room HVAC panel (refer to Drawing 7.3). H_2 Purge Isolation valves close on Containment Isolation Phase A (S_T) signal. The associated Phase A (S_T) reset buttons must be reset to open these valves.

VE-9 (manual loader) must be throttled to ensure annulus pressure remains in the normal operating range (-1.2" to -4.2" of water) as indicated on the HVAC local annulus pressure gages. The manual controller is located on the Control Room HVAC Panel. CAUTION: The indication on 1VE-9 is from 0% to 100%. At 100% 1VE-9 is Full open. At 0% 1VE-9 is Full closed.

2.5. Annulus Door Monitoring System (refer to Drawing 7.4)

The function of the annulus door monitoring system is to provide indication in the Control Room, via an annunciator, that an annulus door has been open for two (2) minutes. The annunciator is labeled "VE Door Open" and once the alarm is received, the operator must dispatch personnel to the Unit 1 MG Set Room to determine the exact door that has been opened. This indication will be provided by the reflash module and will be retained until the operator acknowledges the signal on the module and until the alarm signal is removed (the door is latched). Once the signal has been acknowledged the operator may leave the monitoring cabinet since the indication will be removed when the door is latched. If the door is latched prior to the operator reaching the cabinet the indication will remain until the signal has been acknowledged.

The system may be disabled with a key switch mounted on the monitoring cabinet. There are two key switches on the monitoring panel, one for each unit. When a switch is placed in the "OFF" position, inputs to the reflash module will not function, the Control Room annunciator (1AD13-A8 or 2AD13-A8) is blocked and the system enable light for the appropriate unit on the monitor panel de-energizes. The intended purpose for

ACTION/EXPECTED RESPONSE	RESPONSE NOT OBTAINED
15. **Check containment H_2 concentration:**	
__ a. Ensure operator dispatched to stop Unit 1 NF AHUs.	
__ b. Check H_2 analyzers - IN SERVICE.	b. Perform the following: __ 1) Dispatch operator to place H_2 analyzers in service **PER** EP/1/A/5000/G-1 (Generic Enclosures), Enclosure 5 (Placing H_2 Analyzers In Service). __ 2) **WHEN** H_2 analyzers in service, **THEN** complete Steps 15.c through 15.f. __ 3) **GO TO** Step 16.
__ c. Check H_2 concentration - LESS THAN 6%.	c. Perform the following: __ 1) Obtain recommendation from station management to reduce H_2 concentration. __ 2) **GO TO** Step 15.f.
__ d. Check H_2 igniters - ON.	d. **WHEN** the following conditions met, **THEN** place H_2 igniters in service: __ • NF AHUs off __ • H_2 concentration less than 6%.
__ e. Check H_2 concentration - LESS THAN 0.5%.	__ e. Dispatch operator to place H_2 recombiners in service **PER** EP/1/A/5000/G-1 (Generic Enclosures), Enclosure 4 (Placing H_2 Recombiners In Service).
__ f. Monitor H_2 concentration and notify station management of any significant change.	

1 Pt. Given the following events and conditions:

- Unit 1 is in Mode 1
- 1EMF-36L (Unit 1 Vent Gas) was declared INOPERABLE two days ago
- All Technical Specification ACTIONS are being performed as a result of 1EMF-36L being INOPERABLE
- RP has just determined that 1EMF-39L (Unit 1 Containment Gas) is now INOPERABLE
- Operations has declared 1EMF-39L INOPERABLE
- A VQ release is in progress

Which one of the following describes the Selected Licensee Commitment Required Action as a result of 1EMF-39L being INOPERABLE?

REFERENCE PROVIDED

A. Inform RP they must perform grab sample every 12 hours, and suspend VQ release until grab sample is obtained.

B. Continue VQ release and inform RP they must obtain, and analyze grab samples every 12 hours.

C. Continue VQ release since Unit Vent Totalizer and Minimum Flow Devices are OPERABLE. Grab samples do not need to be obtained.

D. Immediately suspend PURGING or VENTING of radioactive effluents via this pathway.

Bank Question: 1175 ***Answer: B***

1 Pt. Given the following events and conditions:

- Unit 1 is in Mode 1
- 1EMF-36L (Unit 1 Vent Gas) was declared INOPERABLE two days ago
- All Technical Specification ACTIONS are being performed as a result of 1EMF-36L being INOPERABLE
- RP has just determined that 1EMF-39L (Unit 1 Containment Gas) is now INOPERABLE
- Operations has declared 1EMF-39L INOPERABLE
- A VQ release is in progress

Which one of the following describes the Selected Licensee Commitment Required Action as a result of 1EMF-39L being INOPERABLE?

REFERENCE PROVIDED
SLC 16.11.7
Table 16.11.7 Table 1

A. Inform RP they must perform grab sample every 12 hours, and suspend VQ release until grab sample is obtained.

B. Continue VQ release and inform RP they must obtain, and analyze grab samples every 12 hours.

C. Continue VQ release since Unit Vent Totalizer and Minimum Flow Devices are OPERABLE. Grab samples do not need to be obtained.

D. Immediately suspend PURGING or VENTING of radioactive effluents via this pathway.

Distracter Analysis: With only 1EMF36L being inoperable VQ releases may continue providing a grab sample is taken every 12 hours. The question here is what do you do if 1EMF39L also becomes inoperable. With one or more monitors the correct application to continue the VQ releases and take grab samples once per 12 hours.

A. Incorrect:
Plausible:
B. Correct:
C. Incorrect:.
Plausible:.
D. Incorrect:

Plausible:.

Level: SRO Only 10CFR55.43 (4)

KA: W/E16 G2.1.12 (2.9/4.0)

Lesson Plan:

Lesson Plan Objective:

Source: NEW

Level of knowledge: Analysis

References:
1. SLC 16.11.7
2. SLC 16.11.7 Table 1

2.1 Conduct of Operations (continued)

2.1.9 **Ability to direct personnel activities inside the control room.**
(CFR: 45.5 / 45.12 / 45.13)
IMPORTANCE RO 2.5 SRO 4.0

2.1.10 **Knowledge of conditions and limitations in the facility license.**
(CFR: 43.1 / 45.13)
IMPORTANCE RO 2.7 SRO 3.9

2.1.11 **Knowledge of less than one hour technical specification action statements for systems.**
(CFR: 43.2 / 45.13)
IMPORTANCE RO 3.0 SRO 3.8

2.1.12 **Ability to apply technical specifications for a system.**
(CFR: 43.2 / 43.5 / 45.3)
IMPORTANCE RO 2.9 SRO 4.0

2.1.13 **Knowledge of facility requirements for controlling vital / controlled access.**
(CFR: 41.10 / 43.5 / 45.9 / 45.10)
IMPORTANCE RO 2.0 SRO 2.9

2.1.14 **Knowledge of system status criteria which require the notification of plant personnel.**
(CFR: 43.5 / 45.12)
IMPORTANCE RO 2.5 SRO 3.3

2.1.15 **Ability to manage short-term information such as night and standing orders.**
(CFR: 45.12)
IMPORTANCE RO 2.3 SRO 3.0

2.1.16 **Ability to operate plant phone, paging system, and two-way radio.**
(CFR: 41.10 / 45.12)
IMPORTANCE RO 2.9 SRO 2.8

2.1.17 **Ability to make accurate, clear and concise verbal reports.**
(CFR: 45.12 / 45.13)
IMPORTANCE RO 3.5 SRO 3.6

16.11 RADIOLOGICAL EFFLUENT CONTROLS

16.11.7 Radioactive Gaseous Effluent Monitoring Instrumentation

COMMITMENT

The radioactive gaseous effluent monitoring instrumentation channels shown in Table 16.11.7-1 shall be OPERABLE with Alarm/Trip Setpoints set to ensure that the limits of SLC 16.11.6 are not exceeded.

AND

The Alarm/Trip setpoints shall be determined and adjusted in accordance with the methodology and parameters in the ODCM.

----------NOTE----------
Brief periods of routine sampling (not to exceed 15 minutes) do not make the instrumentation inoperable.

APPLICABILITY

As shown in Table 16.11.7-1.

REMEDIAL ACTIONS

----------NOTE----------
Separate Condition entry is allowed for each Function.

CONDITION	REQUIRED ACTION	COMPLETION TIME
A. One or more radioactive gaseous effluent monitoring channels Alarm/Trip setpoint less conservative than required.	A.1 Suspend the release of radioactive gaseous effluents monitored by the affected channel.	Immediately
	OR	
	A.2 Declare the channel inoperable.	Immediately
	OR	
	A.3 Adjust setpoint to within limit.	Immediately

(continued)

REMEDIAL ACTIONS (continued)

CONDITION	REQUIRED ACTION	COMPLETION TIME
B. One or more radioactive gaseous effluent monitoring instrument channels inoperable.	B.1 Enter the Remedial Action specified in Table 16.11.7-1 for the channel(s).	Immediately
C. One channel inoperable.	C.1.1 Analyze two independent samples of the tank contents.	Prior to initiating a release
	AND	
	C.1.2 Perform independent verification of the discharge valve lineup.	Prior to initiating a release
	AND	
	C.1.3.1 Perform independent verification of manual portion of the computer input for the release rate calculations performed by computer.	Prior to initiating a release
	OR	
	C.1.3.2 Perform independent verification of entire release rate calculations for calculations performed manually.	Prior to initiating a release
	AND	
	C.1.4 Restore channel to OPERABLE status.	14 days
	OR	
	C.2 Suspend the release of radioactive effluents via this pathway.	Immediately

(continued)

REMEDIAL ACTIONS (continued)

CONDITION	REQUIRED ACTION	COMPLETION TIME
D. One or more flow rate measurement channels inoperable.	D.1 Estimate the flow rate of the release. AND D.2 Restore the channel to OPERABLE status.	Once per 4 hours during releases 30 days
E. One or more noble gas activity monitor channels inoperable.	E.1 Obtain grab samples from the effluent pathway. AND E.2 Perform an analysis of grab samples for radioactivity. AND E.3 Restore the channel to OPERABLE status.	Once per 12 hours during releases To meet LLD requirements per Table 16.11.6-1 30 days
F. Noble gas activity monitor providing automatic termination of release inoperable.	F.1 Suspend PURGING or VENTING of radioactive effluents via this pathway.	Immediately
G. One or more sampler channels inoperable.	G.1 Perform sampling with auxiliary sampling equipment as required by Table 16.11.6-1. AND G.2 Restore the channel to OPERABLE status.	Continuously 30 days

(continued)

REMEDIAL ACTIONS (continued)

CONDITION	REQUIRED ACTION	COMPLETION TIME
H. One or more Sampler Minimum Flow Device Channels inoperable.	H.1 Verify flow through the sampling apparatus. AND H.2 Restore the channel to OPERABLE status.	Once per 4 hours during releases 30 days
I. Required Action and associated Completion Time of Condition C, D, E, F, G, or H not met.	I.1 Explain why the inoperability was not corrected within the specified Completion Time in the Annual Radioactive Effluent Release Report.	In the next scheduled Annual Radioactive Effluent Release Report

TESTING REQUIREMENTS

----------NOTE----------
Refer to Table 16.11.7-1 to determine which TRs apply for each Radioactive Gaseous Effluent Monitoring channel.

TEST	FREQUENCY
TR 16.11.7.1 Perform CHANNEL CHECK.	Prior to each release
TR 16.11.7.2 ----------NOTE---------- The SOURCE CHECK for these channels shall be the qualitative assessment of channel response when the channel sensor is exposed to a source of increased radioactivity or a simulated source of radioactivity such as a light emitting diode. ---------- Perform SOURCE CHECK.	Prior to each release
TR 16.11.7.3 Perform CHANNEL CHECK.	24 hours
TR 16.11.7.4 Perform CHANNEL CHECK.	7 days

(continued)

TESTING REQUIREMENTS (continued)

	TEST	FREQUENCY
TR 16.11.7.5	----------NOTE---------- The SOURCE CHECK for these channels shall be the qualitative assessment of channel response when the channel sensor is exposed to a source of increased radioactivity or a simulated source of radioactivity such as a light emitting diode. ---------- Perform SOURCE CHECK.	31 days
TR 16.11.7.6	----------NOTES---------- 1. For noble gas activity monitors providing automatic termination of release, the COT shall also demonstrate that automatic isolation of the pathway occurs if the instrument indicates measured levels above the Alarm/Trip Setpoint. 2. For all noble gas activity monitors, the COT shall also demonstrate that control room alarm annunciation occurs if the instrument indicates measured levels above the Alarm/Trip Setpoint; circuit failure and, a downscale failure. ---------- Perform CHANNEL OPERATIONAL TEST.	92 days
TR 16.11.7.7	----------NOTE---------- For all noble gas activity monitors, the initial CHANNEL CALIBRATION shall be performed using standards certified by the National Institute of Standards and Technology (NIST) or using standards obtained from suppliers that participate in measurement assurance activities with NIST. These standards shall permit calibrating the system over its intended range of energy and measurement range. For subsequent CHANNEL CALIBRATION, sources that have been related to the initial calibration shall be used. ---------- Perform a CHANNEL CALIBRATION.	18 months

TABLE 16.11.7-1
(Page 1 of 3)

RADIOACTIVE GASEOUS EFFLUENT MONITORING INSTRUMENTATION

INSTRUMENTS	MINIMUM CHANNELS OPERABLE	REMEDIAL ACTION	APPLICABILITY	TESTING REQUIREMENTS
1. WASTE GAS HOLDUP SYSTEM				
a. Noble Gas Activity Monitor - Providing Alarm and Automatic Termination of Release (Low Range-EMF-50 or 1EMF-36, low-range)	1 per station	A, C, I	During gas effluent releases.	TR 16.11.7.1 TR 16.11.7.2 TR 16.11.7.6 TR 16.11.7.7
b. Effluent System Flow Rate Measuring Device	1 per station	D, I	At all times except when isolation valve is closed & locked.	TR 16.11.7.3 TR 16.11.7.6 TR 16.11.7.7
2. Condenser Evacuation System - Noble Gas Activity Monitor (EMF-33)	1	A, E, I	When air ejectors are operable.	TR 16.11.7.3 TR 16.11.7.5 TR 16.11.7.6 TR 16.11.7.7
3. Vent System				
a. Noble Gas Activity Monitor (Low Range - EMF-36)	1	A, E, I	At all times.	TR 16.11.7.3 TR 16.11.7.5 TR 16.11.7.6 TR 16.11.7.7
b. Iodine Sampler	1	G, I	At all times, except during routine sampling.	TR 16.11.7.4
c. Particulate Sampler (EMF-35)	1	G, I	At all times, except during routine sampling.	TR 16.11.7.4
d. Unit Vent Flow Rate Monitor (Totalizer)	1	D, I	At all times.	TR 16.11.7.3 TR 16.11.7.6 TR 16.11.7.7
e. Iodine Sampler Minimum Flow Device	1	H,I	At all times, except during routine sampling.	TR 16.11.7.3 TR 16.11.7.6 TR 16.11.7.7
f. Particulate Sampler Minimum Flow Device	1	G,I	At all times, except during routine sampling.	TR 16.11.7.3 TR 16.11.7.6 TR 16.11.7.7
4. Containment Purge System - Noble Gas Activity Monitor - Providing Alarm and Automatic Termination of Release (Low Range - EMF-39)	1	A, F, I	Modes 1 through 6, except when isolation valve is closed & locked.	TR 16.11.7.2 TR 16.11.7.3 TR 16.11.7.6 TR 16.11.7.7

(continued)

TABLE 16.11.7-1
(Page 2 of 3)

RADIOACTIVE GASEOUS EFFLUENT MONITORING INSTRUMENTATION

INSTRUMENTS	MINIMUM CHANNELS OPERABLE	REMEDIAL ACTION	APPLICABILITY	TESTING REQUIREMENTS
5. Auxiliary Building Ventilation System - Noble Gas Activity Monitor (EMF-41 or EMF-36)	1	A, E, I	At all times.	TR 16.11.7.3 TR 16.11.7.5 TR 16.11.7.6 TR 16.11.7.7
6. Fuel Storage Area Ventilation System - Noble Gas Activity Monitor (EMF-42 or EMF-36)	1	A, E, I	At all times.	TR 16.11.7.3 TR 16.11.7.5 TR 16.11.7.6 TR 16.11.7.7
7. Contaminated Parts Warehouse Ventilation System				
a. Noble Gas Activity Monitor (EMF-53)	1 per station	A, E, I	During gaseous effluent releases.	TR 16.11.7.3 TR 16.11.7.5 TR 16.11.7.6 TR 16.11.7.7
b. Flow Rate Monitor	1 per station	D, I	During gaseous effluent releases.	TR 16.11.7.3 TR 16.11.7.6 TR 16.11.7.7
c. EMF-53 Sampler Minimum Flow Device	1 per station	H,I	During gaseous effluent releases.	TR 16.11.7.3 TR 16.11.7.6 TR 16.11.7.7
8. Radwaste Facility Ventilation System				
a. Noble Gas Activity Monitor (EMF-52)	1 per station	A, E, I	During gaseous effluent releases.	TR 16.11.7.3 TR 16.11.7.5 TR 16.11.7.6 TR 16.11.7.7
b. Flow Rate Monitor	1 per station	D, I	During gaseous effluent releases.	TR 16.11.7.3 TR 16.11.7.6 TR 16.11.7.7
c. EMF-52 Sampler Minimum Flow Device	1 per station	H, I	During gaseous effluent releases.	TR 16.11.7.3 TR 16.11.7.6 TR 16.11.7.7

(continued)

TABLE 16.11.7-1
(Page 3 of 3)

RADIOACTIVE GASEOUS EFFLUENT MONITORING INSTRUMENTATION

INSTRUMENTS	MINIMUM CHANNELS OPERABLE	REMEDIAL ACTION	APPLICABILITY	TESTING REQUIREMENTS
9. Equipment Staging Building Ventilation System				
a. Noble Gas Activity Monitor (EMF-59)	1 per station	A, E, I	During gaseous effluent releases.	TR 16.11.7.3 TR 16.11.7.5 TR 16.11.7.6 TR 16.11.7.7
b. Flow Rate Monitor	1 per station	D, I	During gaseous effluent releases.	TR 16.11.7.3 TR 16.11.7.6 TR 16.11.7.7
c. EMF-59 Sampler Minimum Flow Device	1 per station	H, I	During gaseous effluent releases.	TR 16.11.7.3 TR 16.11.7.6 TR 16.11.7.7
10. Containment Air Release and Addition System - Noble Gas Activity Monitor (EMF-39L or EMF-36L)	1	A, E, I	At all times except when isolation valve is closed & locked.	TR 16.11.7.3 TR 16.11.7.5 TR 16.11.7.6 TR 16.11.7.7

1 Pt. Given the following conditions on Unit 1:

- EP/1/A/5000-ES-0.2 (Natural Circulation Cooldown) has been implemented
- Cold Leg Accumulators have been isolated
- NC Tcolds are 315 degrees
- Core Exit Thermocouples are 335 degrees
- Upper Head T/Cs are 430 degrees
- NC Wide Range Pressure is 360 psig

While depressurizing the NC system to 325 psig an abnormal pressurizer level increase is observed.

Which of the following strategies should the SRO implement to address the level increase?

REFERENCE PROVIDED

A. Stabilize pressure and continue cooldown

B. Raise pressure to 375 psig and continue cooldown

C. Raise pressure to 450 psig and stabilize NC Tcolds

D. Go to EP/1/A/5000/ES-0.3 Natural Circulation Cooldown with Steam Void in Vessel

---

Bank Question: 1176 **Answer: C**

1 Pt. Given the following conditions on Unit 1:

- EP/1/A/5000-ES-0.2 (Natural Circulation Cooldown) has been implemented
- Cold Leg Accumulators have been isolated
- NC Tcolds are 315 degrees
- Core Exit Thermocouples are 335 degrees
- Upper Head T/Cs are 430 degrees
- NC Wide Range Pressure is 360 psig

While depressurizing the NC system to 325 psig an abnormal pressurizer level increase is observed.

Which of the following strategies should the SRO implement to address the level increase?

REFERENCE PROVIDED
EP/1/A/5000/ES-0.2 Natural Circulation Cooldown
Data Book Curve 1.6a
Data Book Curve 1.10b

A. Stabilize pressure and continue cooldown

B. Raise pressure to 375 psig and continue cooldown

C. Raise pressure to 450 psig and stabilize NC Tcolds

D. Go to EP/1/A/5000/ES-0.3 Natural Circulation Cooldown with Steam Void in Vessel

---

Distracter Analysis: LTOP is placed in service at 320 degrees and at than 325 psig. The voiding occurred prior to LTOP being placed in service. Cooldown can not continue until LTOP is placed in service. The student must piece together that both trains of ICCM are inoperable requiring the use of curve 1.10b.

A. **Incorrect**: this course of actions will not collapse the void
Plausible: if the student thinks that cooling down the NCS will collapse the void.

B. **Incorrect**: this will not collapse the void in the head
Plausible: this is the maximum pressure allowed in LTOP

C. **Correct**:

D. **Incorrect**: ES-0.3 is only entered if depressurization must be continued

Plausible: if the student thinks that voiding is criteria for transferring to ES-0.3.

LEVEL: SRO Only 10CFR55.43b (5)

KA: EPE W/E09 EA2.2 (3.4/3.8)

SOURCE: NEW

LEVEL OF KNOWLEDGE: Analysis

AUTHOR: CWS

LESSON: OP-MC-EP-E0

LESSON PLAN OBJECTIVE: OP-MC-EP-E0 Obj. 6

REFERENCES:
1. EP/ES-0.2 Natural Circulation Cooldown pages 12, 16 and 17
2. Data Book Curve 1.6a
3. Data Book Curve 1.10b
4. EP-MC-EP-E0 page 155 and 156

EPE: **Natural Circulation Operations(Continued)**

K/A NO. **KNOWLEDGE**

EK3.2 Normal, abnormal and emergency operating procedures associated with (Natural Circulation Operations).
IMPORTANCE RO 3.2 SRO 3.6

EK3.3 Manipulation of controls required to obtain desired operating results during abnormal, and emergency situations.
IMPORTANCE RO 3.5 SRO 3.6

EK3.4 RO or SRO function within the control room team as appropriate to the assigned position, in such a way that procedures are adhered to and the limitations in the facilities license and amendments are not violated.
IMPORTANCE RO 3.4 SRO 3.6

ABILITY

EA1. Ability to operate and / or monitor the following as they apply to the (Natural Circulation Operations)
(CFR: 41.7 / 45.5 / 45.6)

EA1.1 Components, and functions of control and safety systems, including instrumentation, signals, interlocks, failure modes, and automatic and manual features.
IMPORTANCE RO 3.5 SRO 3.5

EA1.2 Operating behavior characteristics of the facility.
IMPORTANCE RO 3.6 SRO 3.9

EA1.3 Desired operating results during abnormal and emergency situations.
IMPORTANCE RO 3.5 SRO 3.8

EA2. Ability to determine and interpret the following as they apply to the (Natural Circulation Operations)
(CFR: 43.5 / 45.13)

EA2.1 Facility conditions and selection of appropriate procedures during abnormal and emergency operations.
IMPORTANCE RO 3.1 SRO 3.8

[redacted]
IMPORTANCE RO 3.4 SRO 3.8

CLASSROOM TIME (Hours)

NLO	NLOR	LPRO	LPSO	LOR
N/A	N/A	2.0	2.0	1.0

OBJECTIVES

SEQ	OBJECTIVE	NLO	NLOR	LPRO	LPSO	LOR
1	Describe the accidents that are diagnosed in E-0 and the diagnostic sequence. EPE0001			X	X	X
2	Explain the purpose for each procedure in the E-0 series. EPE0002			X	X	
3	Discuss the entry and exit guidance for each procedure in the E-0 series. EPE0003			X	X	
4	Discuss the symptoms of a reactor trip and/or safety injection. EPE0004			X	X	
5	Discuss the mitigating strategy (major actions) of each procedure in the E-0 series. EPE0005			X	X	X
6	Discuss the basis for any note, caution or step for each procedure in the E-0 series. EPE0006			X	X	X
7	Describe the immediate actions and include the RNO when appropriate. EPE0007			X	X	X
8	Describe the actions included on the E-0 Foldout page and the basis for these actions. EPE0008			X	X	X
9	Given the Foldout page, other than E-0, discuss the actions included and the basis for these actions. EPE0009			X	X	X

NOTE

- Subcooling may be reduced to less than limits specified in step 18, while depressurizing to 325 psig.
- NC temperature may be reduced to beween 300° F and 320° F prior to reducing pressure below 380 psig (limit in Data Book curve 1.6a), as long as the following limits are met:
    - NC T-Colds are maintained above 300° F
    - NC pressure is less than 1000 psig

STEP 30 Establish conditions for LTOP and RHR as follows:

STEP 31 Check NC N/R pressure:

STEP 32 Place LTOP in service as follows:

PURPOSE: To establish temperature and pressure conditions to select Pzr PORV LTOP mode, prior to any T-Cold reaching 300° F.

BASIS: Tech Specs requires selecting LTOP mode on Pzr PORVs prior to any T-Cold reaching 300° F. In order to do this, pressure must be dropped below the LTOP Pzr PORV setpoint. To avoid violationg Tech Specs , T-Colds are stabilized between 300 - 320° F until NC pressure is reduced and LTOP mode selected on PORVs.

In ES-0.2, additional subcooling requirements specified for a natural circ cooldown cannot be maintained, and still select LTOP mode with TS limits (the more restrictive subcooling requirements in ES-0.2 are intended to prevent voiding in the upper head). Subcooling must be reduced slightly below the limits of 50°/100° F. In order to do this, this step will slowly depressurize while monitoring fo a potential void in the vessel head. If a void starts forming, pressure will be raised and stabilized for an hour to allow the upper head to cool further. Temperature will drop in the upper head until depressurization can be performed. It is likely that no void will occur, but if it does, the mitigation strategy of ES-0.2 will be maintained, by arresting any upper head void. This strategy gives operators a clear method to follow TSs and still prevent voiding in the head.

In ES-0.2, some flexibility to drop T-Colds below 320°, prior to lowering pressure below 380 psig is given in step 30 note. It may not be possible to maintain the indicated subcooling limit of 100° f and meet the Data Book 1.6a requirement. As long a TS limits and S/G differential limits are met, the NC system will be within all required operating limits. NC pressure of less than 1000 psig was selected, since it will conservatively ensure both of these limits are met, while staying well above

Any subcooling limits (this is the setpoint at which we also isolate CLAs). Once T-Colds are stabilized between 300 - 320 ° F, pressure will be further reduced and the Data Book curve requirement to have pressure below 380 psig will be met. The intent of this data book limit is to ensure pressure is below the Pzr. PORV lift setpoint prior to temperature being in a range where the LTOP setpoint could be armed. The EP will not manually arm the LTOP PORV setpoint until pressure is reduced below setpoint, so the intent of the Data Book limit is met.

ACTION/EXPECTED RESPONSE	RESPONSE NOT OBTAINED
19. **Continue NC System cooldown and depressurization:**	
__ a. Maintain cooldown rate based on T-Colds - LESS THAN 50 °F IN AN HOUR.	
__ b. Maintain subcooling requirements of Step 18.	b. Perform the following: __ 1) Stop depressurization. __ 2) Restore required subcooling.
__ c. Maintain NC temperature and pressure within limits of Data Book curve 1.6.a.	
20. **<u>IF</u> <u>AT</u> <u>ANY</u> <u>TIME</u> raising normal letdown flow is required (due to low NC pressure), <u>THEN</u> perform the following as needed:**	
__ • Open additional orifice isolation valves.	
__ • Reduce letdown pressure using 1NV-124 (Letdown Pressure Control), while preventing flashing across letdown orifices.	
21. **Check Reactor Vessel full:**	**Perform one of the following:**
__ • Pzr level response - NORMAL	__ • Repressurize NC System within the limits of Data Book curve 1.6.a to collapse potential voids in system and continue cooldown.
__ • "REACTOR VESSEL UR LEVEL" - GREATER THAN OR EQUAL TO 100%.	OR
	__ • **<u>IF</u>** NC System depressurization must continue, **<u>THEN</u> <u>GO</u> <u>TO</u>** EP/1/A/5000/ES-0.3 (Natural Circulation Cooldown With Steam Void In Vessel).

ACTION/EXPECTED RESPONSE	RESPONSE NOT OBTAINED

NOTE

- Subcooling may be reduced to less than limits specified in Step 18, while depressurizing to 325 PSIG.
- NC temperatures may be reduced to between 300° F and 320° F prior to reducing pressure below 380 PSIG (limit in Data Book curve 1.6.a), as long as the following limits are met:
  - NC T-Colds are maintained above 300° F
  - NC pressure is less than 1000 PSIG.

30. **Establish conditions for LTOP and RHR as follows:**

__ a. Stabilize NC T-Colds between 300° F - 320° F.

__ b. Do not continue until NC T-Colds and T-Hots are stable.

__ c. Check OAC - AVAILABLE.

__ c. **GO TO** Step 30.e.

NOTE NC N/R pressure instruments are used to control Pzr PORVs in low pressure mode. N/R pressure is indicated on OAC once Step 25 has been completed.

__ d. Monitor NC pressure using N/R pressure indication (OAC points M1A1365 and M1A1359).

e. Slowly reduce NC pressure to 325 PSIG while monitoring for symptoms of upper head voiding:

__ • Pzr level response - NORMAL
__ • "REACTOR VESSEL UR LEVEL" - GREATER THAN OR EQUAL TO 100%.

ACTION/EXPECTED RESPONSE	RESPONSE NOT OBTAINED

30. (Continued)

NOTE Changes in Pzr aux spray flowrate will affect B NC loop temperature, due to changes in outsurge of hot Pzr water. Reducing or isolating aux spray flow may require a slight reduction in steaming of B S/G to ensure B NC loop T-Cold stays above 300° F.

f. **IF AT ANY TIME** during depressurization, upper head voiding is indicated, **THEN**:

__ 1) Stop depressurization.

__ 2) Raise pressure as required to collapse void.

__ 3) Maintain NC temperature and pressure stable for 1 hour to allow upper head to cool.

__ 4) **WHEN** 1 hour has elapsed, **THEN** perform Step 30.e again to continue depressurization to 325 PSIG.

__ g. **WHEN** NC pressure reaches 325 PSIG, **THEN** stabilize NC pressure.

31. **Check NC N/R pressure:**

__ • N/R pressure transmitters - IN SERVICE.

__ • N/R pressure - AT 325 PSIG (OAC points M1A1365 and M1A1359).

Perform the following:

__ a. Maintain NC T-Colds above 300° F until Pzr PORVs selected for low pressure mode.

b. **WHEN** the following conditions are met, **THEN GO TO** Step 32 to place PORVs in LTOP mode:

__ • NC N/R pressure transmitters in service.

__ • NC N/R pressure at 325 PSIG

__ c. **GO TO** Step 33.

OP/1/A/6100/022
Enclosure 4.3
CURVE 1.6a
REACTOR COOLANT SYSTEM
COOLDOWN LIMITATIONS

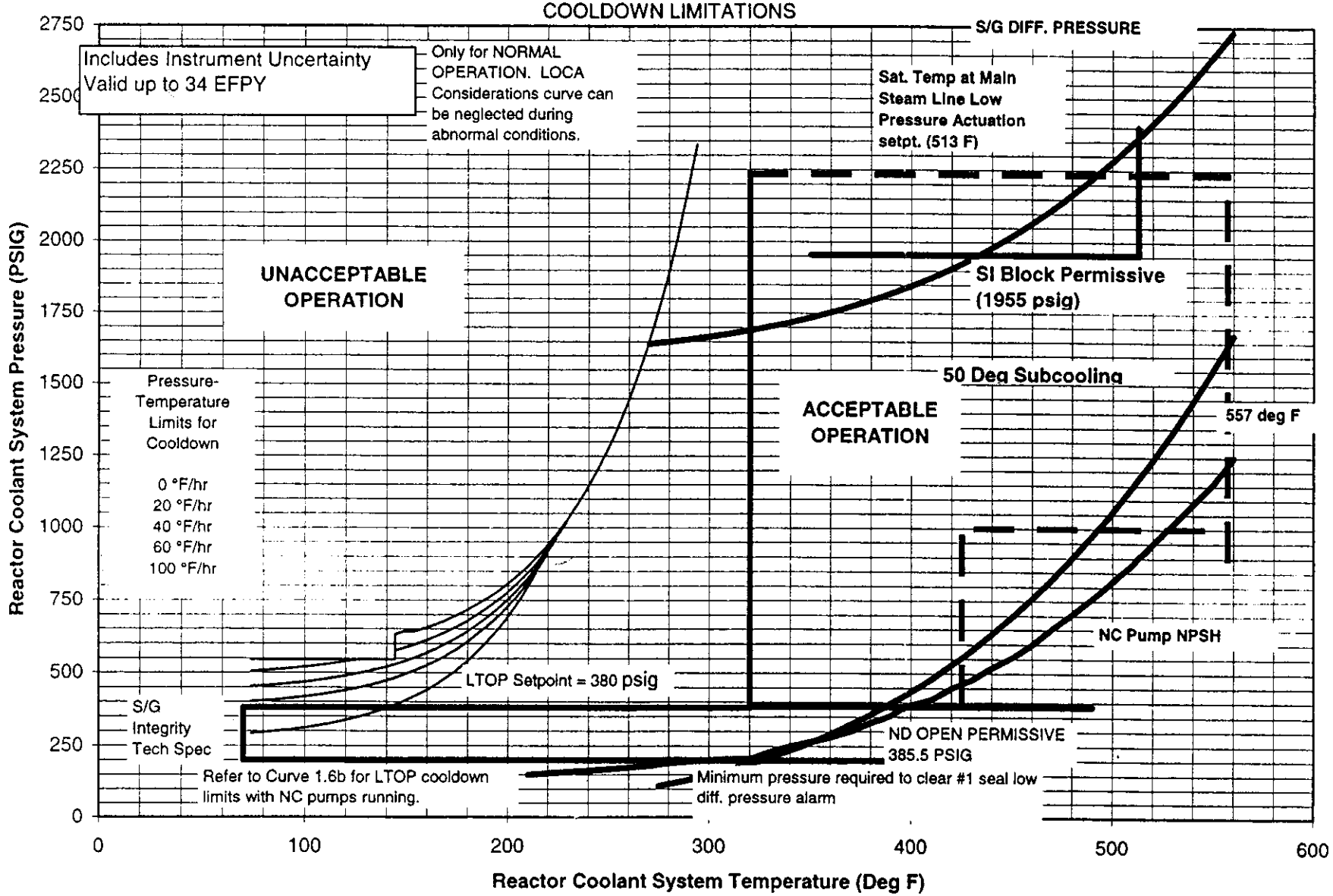

SATURATION CURVE ADJUSTED FOR INSTRUMENT ERROR (WIDE RANGE NC PRESSURE INSTRUMENT)

NC PRESSURE (psig)	SATURATION TEMP. ADJUSTED FOR INSTRUMENT ERROR (°F)
0.0	193.90
35.3	207.84
85.3	228.15
135.3	299.73
185.3	336.80
235.3	363.07
285.3	383.81
335.3	401.13
385.3	416.09
435.3	429.35
485.3	441.28
535.3	452.17
585.3	462.20
635.3	471.53
685.3	480.25
735.3	488.45
785.3	496.21
885.3	510.56
985.3	523.66
1085.3	535.73
1185.3	546.93
1285.3	557.41
1385.3	567.26
1485.3	576.56
1585.3	585.37
1685.3	593.76
1785.3	601.75
1885.3	609.39
1985.3	616.71
2085.3	623.74
2185.3	630.50
2285.3	637.00
2385.3	643.27
2485.3	649.32

References:
1) Calculation File MCC-1552.08-00-0160, Instrument Uncertainties for ICCM and OAC Subcooling Margin, Rev. 1.
2) MCEI-0400-08, ICCM and OAC Error Adjusted Saturation Tables, Rev. 0.
3) IP/0/A/3000/18, ICCM-86 Programming and Operation, approved 12/3/91.

UNIT 1

OP/1/A/6100/22
ENCLOSURE 4.3 - CURVE 1.10B
SATURATION CURVE ADJUSTED FOR INSTRUMENT ERROR
(WIDE RANGE NC PRESSURE SENSOR)

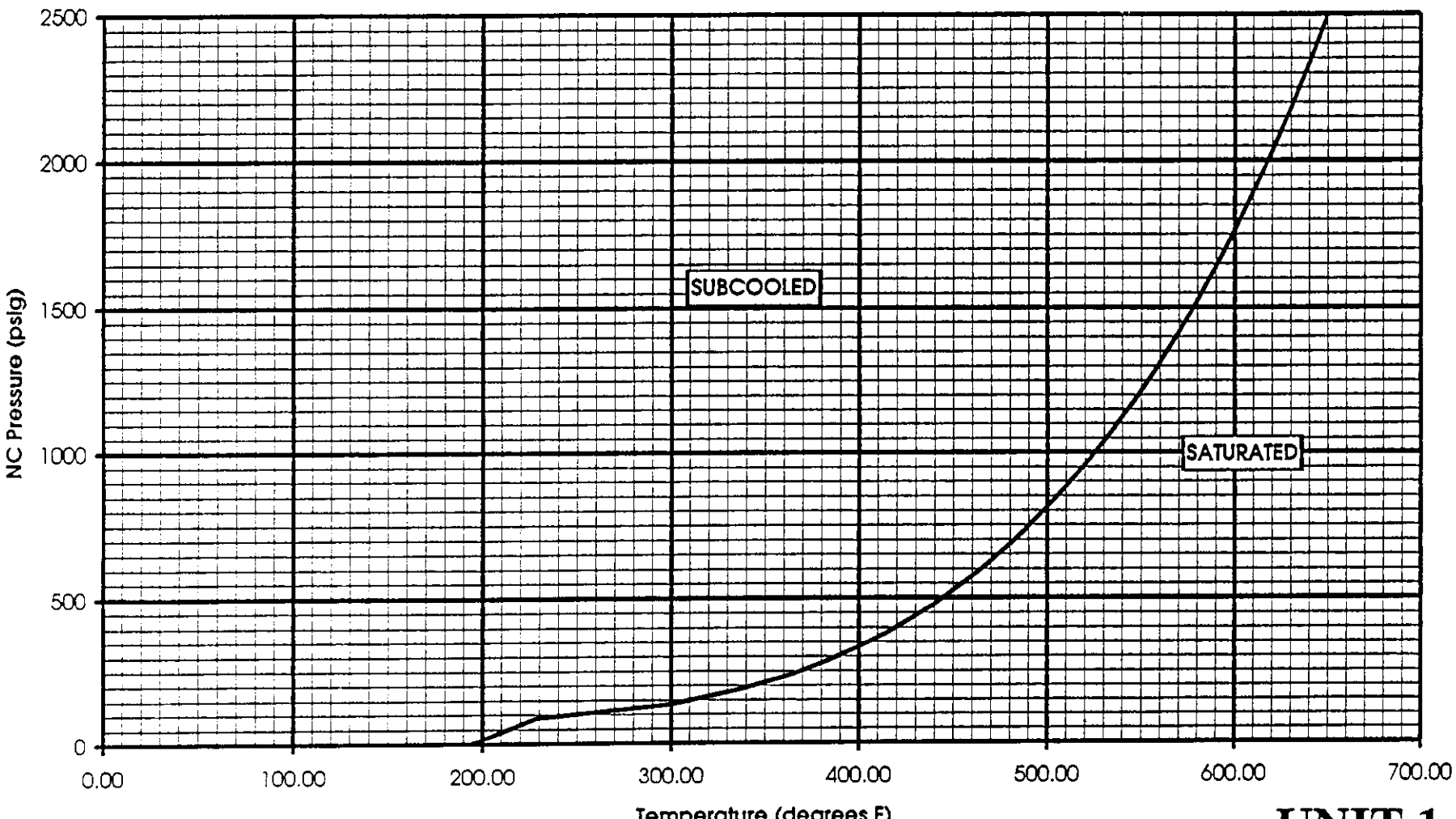

UNIT 1

1 Pt. Unit 1 is operating at 100 % power. Given the following events and conditions:

IAE informs the Control Room SRO that the manufacturer has notified McGuire that none of the reactor coolant pumps underfrequency detectors will perform their designed reactor trip function within the allowable values.

Which one of the following would be required by Technical Specifications?

REFERENCE PROVIDED

A. **Place channel(s) in trip within 6 hours OR Reduce thermal power to < P-7 in 12 hours**

B. **Restore channel(s) or train(s) to OPERABLE in 48 hours OR Open reactor trip breakers in 49 hours**

C. **Restore train(s) to OPERABLE status in 6 hours OR Be in Mode 3 in 12 hours**

D. **Initiate actions within 1 hour to place the unit in Mode 3 within 7 hours.**

Bank Question: 1177 **Answer: D**

1 Pt. Unit 1 is operating at 100 % power. Given the following events and conditions:

IAE informs the Control Room SRO that the manufacturer has notified McGuire that none of the reactor coolant pumps underfrequency detectors will perform their designed reactor trip function within the allowable values.

Which one of the following would be required by Technical Specifications?

REFERENCE PROVIDED
Tech Spec 3.3.1
Tech Spec Table 3.3.1-1

A. **Place channel(s) in trip within 6 hours OR Reduce thermal power to < P-7 in 12 hours**

B. **Restore channel(s) or train(s) to OPERABLE in 48 hours OR Open reactor trip breakers in 49 hours**

C. **Restore train(s) to OPERABLE status in 6 hours OR Be in Mode 3 in 12 hours**

D. **Initiate actions within 1 hour to place the unit in Mode 3 within 7 hours.**

Distracter Analysis: This question depends on the student realizing that all channels of underfrequency being inoperable relates to two trains of trip functions being inoperable.

A. **Incorrect**:
Plausible: The student could think that it was permissible to get power below P-7 where the trip function does not apply

B. **Incorrect**:
Plausible: this is a Mode 3,4 or 5 action

C. **Incorrect**:
Plausible: the Tech Spec action for an inoperable train is to restore the train in 48 hours

D. **Correct**:

Level: SRO Only 10CFR55.43 (2)

KA: 003 G2.1.11 (3.0/3.8)

Lesson Plan:

Lesson Plan Objective:

Source: NEW

Level of knowledge: Analysis

References:
1. Technical Specification 3.3.1
2. Technical Specification Table 3.3.1-1

2.1 Conduct of Operations (continued)

2.1.9 **Ability to direct personnel activities inside the control room.**
(CFR: 45.5 / 45.12 / 45.13)
IMPORTANCE RO 2.5 SRO 4.0

2.1.10 **Knowledge of conditions and limitations in the facility license.**
(CFR: 43.1 / 45.13)
IMPORTANCE RO 2.7 SRO 3.9

2.1.11 **Knowledge of less than one hour technical specification action statements for systems.**
(CFR: 43.2 / 45.13)
IMPORTANCE RO 3.0 SRO 3.8

2.1.12 **Ability to apply technical specifications for a system.**
(CFR: 43.2 / 43.5 / 45.3)
IMPORTANCE RO 2.9 SRO 4.0

2.1.13 **Knowledge of facility requirements for controlling vital / controlled access.**
(CFR: 41.10 / 43.5 / 45.9 / 45.10)
IMPORTANCE RO 2.0 SRO 2.9

2.1.14 **Knowledge of system status criteria which require the notification of plant personnel.**
(CFR: 43.5 / 45.12)
IMPORTANCE RO 2.5 SRO 3.3

2.1.15 **Ability to manage short-term information such as night and standing orders.**
(CFR: 45.12)
IMPORTANCE RO 2.3 SRO 3.0

2.1.16 **Ability to operate plant phone, paging system, and two-way radio.**
(CFR: 41.10 / 45.12)
IMPORTANCE RO 2.9 SRO 2.8

2.1.17 **Ability to make accurate, clear and concise verbal reports.**
(CFR: 45.12 / 45.13)
IMPORTANCE RO 3.5 SRO 3.6

3.3 INSTRUMENTATION

3.3.1 Reactor Trip System (RTS) Instrumentation

LCO 3.3.1 The RTS instrumentation for each Function in Table 3.3.1-1 shall be OPERABLE.

APPLICABILITY: According to Table 3.3.1-1.

ACTIONS

----------NOTE----------
Separate Condition entry is allowed for each Function.

CONDITION	REQUIRED ACTION	COMPLETION TIME
A. One or more Functions with one or more required channels inoperable.	A.1 Enter the Condition referenced in Table 3.3.1-1 for the channel(s).	Immediately
B. One Manual Reactor Trip channel inoperable.	B.1 Restore channel to OPERABLE status. OR B.2 Be in MODE 3.	48 hours 54 hours
C. One channel or train inoperable.	C.1 Restore channel or train to OPERABLE status. OR C.2 Open reactor trip breakers (RTBs).	48 hours 49 hours

(continued)

ACTIONS (continued)

CONDITION	REQUIRED ACTION	COMPLETION TIME
D. One channel inoperable.	----------NOTE---------- One channel may be bypassed for up to 4 hours for surveillance testing and setpoint adjustment. ----------	
	D.1.1 Place channel in trip.	6 hours
	AND	
	D.1.2 Reduce THERMAL POWER to ≤ 75% RTP.	12 hours
	OR	
	D.2.1 Place channel in trip.	6 hours
	AND	
	----------NOTE---------- Only required to be performed when the Power Range Neutron Flux input to QPTR is inoperable. ----------	
	D.2.2 Perform SR 3.2.4.2.	Once per 12 hours
	OR	
	D.3 Be in MODE 3.	12 hours

(continued)

ACTIONS (continued)

CONDITION	REQUIRED ACTION	COMPLETION TIME
E. One channel inoperable.	----------NOTE---------- One channel may be bypassed for up to 4 hours for surveillance testing. ----------	
	E.1 Place channel in trip.	6 hours
	OR	
	E.2 Be in MODE 3.	12 hours
F. THERMAL POWER > P-6 and < P-10, one Intermediate Range Neutron Flux channel inoperable.	F.1 Reduce THERMAL POWER to < P-6.	2 hours
	OR	
	F.2 Increase THERMAL POWER to > P-10.	2 hours
G. THERMAL POWER > P-6 and < P-10, two Intermediate Range Neutron Flux channels inoperable.	----------NOTE---------- Limited boron concentration changes associated with RCS inventory control or limited plant temperature changes are allowed. ----------	
	G.1 Suspend operations involving positive reactivity additions.	Immediately
	AND	
	G.2 Reduce THERMAL POWER to < P-6.	2 hours
H. THERMAL POWER < P-6, one or two Intermediate Range Neutron Flux channels inoperable.	H.1 Restore channel(s) to OPERABLE status.	Prior to increasing THERMAL POWER to > P-6

(continued)

ACTIONS (continued)

CONDITION	REQUIRED ACTION	COMPLETION TIME
	----------NOTE---------- Limited boron concentration changes associated with RCS inventory control or limited plant temperature changes are allowed.	
I. One Source Range Neutron Flux channel inoperable.	I.1 Suspend operations involving positive reactivity additions.	Immediately
J. Two Source Range Neutron Flux channels inoperable.	J.1 Open RTBs.	Immediately
K. One Source Range Neutron Flux channel inoperable.	K.1 Restore channel to OPERABLE status. OR K.2 Open RTBs.	48 hours 49 hours
	----------NOTE---------- Plant temperature changes are allowed provided that SDM is maintained and Keff remains < 0.99.	
L. Required Source Range Neutron Flux channel inoperable.	L.1 Suspend operations involving positive reactivity additions. AND L.2 Close unborated water source isolation valves. AND L.3 Perform SR 3.1.1.1.	Immediately 1 hour 1 hour AND Once per 12 hours thereafter

(continued)

ACTIONS (continued)

CONDITION	REQUIRED ACTION	COMPLETION TIME
M. One channel inoperable.	----------NOTE---------- One channel may be bypassed for up to 4 hours for surveillance testing. ----------	
	M.1 Place channel in trip.	6 hours
	OR	
	M.2 Reduce THERMAL POWER to < P-7.	12 hours
N. One Reactor Coolant Flow - Low (Single Loop) channel inoperable.	----------NOTE---------- One channel may be bypassed for up to 4 hours for surveillance testing. ----------	
	N.1 Place channel in trip.	6 hours
	OR	
	N.2 Reduce THERMAL POWER to < P-8.	10 hours

(continued)

ACTIONS (continued)

CONDITION	REQUIRED ACTION	COMPLETION TIME
O. One Turbine Trip - Low Fluid Oil Pressure channel inoperable.	----------NOTE---------- One channel may be bypassed for up to 4 hours for surveillance testing. ----------	
	O.1 Place channel in trip.	6 hours
	OR	
	O.2 Reduce THERMAL POWER to < P-8.	10 hours
P. One or more Turbine Trip - Turbine Stop Valve Closure channels inoperable.	P.1 Place channel in trip.	6 hours
	OR	
	P.2 Reduce THERMAL POWER to < P-8.	10 hours
Q. One train inoperable.	----------NOTE---------- One train may be bypassed for up to 4 hours for surveillance testing provided the other train is OPERABLE. ----------	
	Q.1 Restore train to OPERABLE status.	6 hours
	OR	
	Q.2 Be in MODE 3.	12 hours

(continued)

ACTIONS (continued)

CONDITION	REQUIRED ACTION	COMPLETION TIME
R. One RTB train inoperable.	----------NOTES---------- 1. One train may be bypassed for up to 2 hours for surveillance testing, provided the other train is OPERABLE. 2. One RTB may be bypassed for up to 2 hours for maintenance on undervoltage or shunt trip mechanisms, provided the other train is OPERABLE. ---------- R.1 Restore train to OPERABLE status. OR R.2 Be in MODE 3.	 1 hour 7 hours
S. One or more channel(s) inoperable.	S.1 Verify interlock is in required state for existing unit conditions. OR S.2 Be in MODE 3.	1 hour 7 hours

(continued)

ACTIONS (continued)

CONDITION		REQUIRED ACTION		COMPLETION TIME
T.	One or more channel(s) inoperable.	T.1	Verify interlock is in required state for existing unit conditions.	1 hour
		OR		
		T.2	Be in MODE 2.	7 hours
U.	One trip mechanism inoperable for one RTB.	U.1	Restore inoperable trip mechanism to OPERABLE status.	48 hours
		OR		
		U.2	Be in MODE 3.	54 hours
V.	Two RTS trains inoperable.	V.1	Enter LCO 3.0.3.	Immediately

SURVEILLANCE REQUIREMENTS

----------NOTE----------
Refer to Table 3.3.1-1 to determine which SRs apply for each RTS Function.

SURVEILLANCE		FREQUENCY
SR 3.3.1.1	Perform CHANNEL CHECK.	12 hours
SR 3.3.1.2	----------NOTES---------- 1. Adjust NIS channel if absolute difference is > 2% RTP. 2. Not required to be performed until 12 hours after THERMAL POWER is ≥ 15% RTP. --- Compare results of calorimetric heat balance calculation to Nuclear Instrumentation System (NIS) channel output.	24 hours
SR 3.3.1.3	----------NOTES---------- 1. Adjust NIS channel if absolute difference is ≥ 3% AFD. 2. Not required to be performed until 24 hours after THERMAL POWER is ≥ 15% RTP. --- Compare results of the incore detector measurements to NIS AFD.	31 effective full power days (EFPD)

(continued)

SURVEILLANCE REQUIREMENTS (continued)

SURVEILLANCE		FREQUENCY
SR 3.3.1.4	----------NOTES---------- This Surveillance must be performed on the reactor trip bypass breaker prior to placing the bypass breaker in service. ---------- Perform TADOT.	31 days on a STAGGERED TEST BASIS
SR 3.3.1.5	Perform ACTUATION LOGIC TEST.	31 days on a STAGGERED TEST BASIS
SR 3.3.1.6	----------NOTES---------- Not required to be performed until 24 hours after THERMAL POWER is ≥ 75% RTP. ---------- Calibrate excore channels to agree with incore detector measurements.	92 EFPD
SR 3.3.1.7	----------NOTES---------- Not required to be performed for source range instrumentation prior to entering MODE 3 from MODE 2 until 4 hours after entry into MODE 3. ---------- Perform COT.	92 days

(continued)

SURVEILLANCE REQUIREMENTS (continued)

SURVEILLANCE		FREQUENCY
SR 3.3.1.8	----------NOTES---------- This Surveillance shall include verification that interlocks P-6 (for the Intermediate Range channels) and P-10 (for the Power Range channels) are in their required state for existing unit conditions. ----------	
	Perform COT.	---------NOTE------- Only required when not performed within previous 92 days ---------- Prior to reactor startup AND Four hours after reducing power below P-10 for power and intermediate range instrumentation AND Four hours after reducing power below P-6 for source range instrumentation AND Every 92 days thereafter

(continued)

SURVEILLANCE REQUIREMENTS (continued)

SURVEILLANCE		FREQUENCY
SR 3.3.1.9	----------NOTES---------- Verification of setpoint is not required. ---------- Perform TADOT.	92 days
SR 3.3.1.10	----------NOTES---------- This Surveillance shall include verification that the time constants are adjusted to the prescribed values. ---------- Perform CHANNEL CALIBRATION.	18 months
SR 3.3.1.11	----------NOTES---------- 1. Neutron detectors are excluded from CHANNEL CALIBRATION. 2. Power and Intermediate Range Neutron Flux detector plateau voltage verification is not required to be performed prior to entry into MODE 1 or 2. ---------- Perform CHANNEL CALIBRATION.	18 months
SR 3.3.1.12	Perform CHANNEL CALIBRATION.	18 months
SR 3.3.1.13	Perform COT.	18 months

(continued)

SURVEILLANCE REQUIREMENTS (continued)

SURVEILLANCE		FREQUENCY
SR 3.3.1.14	----------NOTES---------- Verification of setpoint is not required. ---------- Perform TADOT.	18 months
SR 3.3.1.15	----------NOTES---------- Verification of setpoint is not required. ---------- Perform TADOT.	--------NOTE-------- Only required when not performed within previous 31 days ---------- Prior to reactor startup
SR 3.3.1.16	----------NOTES---------- Neutron detectors are excluded from response time testing. ---------- Verify RTS RESPONSE TIME is within limits.	18 months on a STAGGERED TEST BASIS
SR 3.3.1.17	Verify RTS RESPONSE TIME for RTDs is within limits.	18 months

Table 3.3.1-1 (page 1 of 7)
Reactor Trip System Instrumentation

FUNCTION	APPLICABLE MODES OR OTHER SPECIFIED CONDITIONS	REQUIRED CHANNELS	CONDITIONS	SURVEILLANCE REQUIREMENTS	ALLOWABLE VALUE	NOMINAL TRIP SETPOINT
1. Manual Reactor Trip	1,2	2	B	SR 3.3.1.14	NA	NA
	3[a], 4[a], 5[a]	2	C	SR 3.3.1.14	NA	NA
2. Power Range Neutron Flux						
a. High	1,2	4	D	SR 3.3.1.1 SR 3.3.1.2 SR 3.3.1.7 SR 3.3.1.11 SR 3.3.1.16	≤ 110% RTP	109% RTP
b. Low	1[b],2	4	E	SR 3.3.1.1 SR 3.3.1.8 SR 3.3.1.11 SR 3.3.1.16	≤ 26% RTP	25% RTP
3. Power Range Neutron Flux Rate						
High Positive Rate	1,2	4	D	SR 3.3.1.7 SR 3.3.1.11	≤ 5.5% RTP with time constant ≥ 2 sec	5% RTP with time constant ≥ 2 sec
4. Intermediate Range Neutron Flux	1[b], 2[c]	2	F,G	SR 3.3.1.1 SR 3.3.1.8 SR 3.3.1.11	≤ 30% RTP	25% RTP
	2[d]	2	H	SR 3.3.1.1 SR 3.3.1.8 SR 3.3.1.11	≤ 30% RTP	25% RTP
5. Source Range Neutron Flux	2[d]	2	I,J	SR 3.3.1.1 SR 3.3.1.8 SR 3.3.1.11	≤ 1.3 E5 cps	1.0 E5 cps
	3[a], 4[a], 5[a]	2	J,K	SR 3.3.1.1 SR 3.3.1.7 SR 3.3.1.11	≤ 1.3 E5 cps	1.0 E5 cps
	3[e], 4[e], 5[e]	1	L	SR 3.3.1.1 SR 3.3.1.11	N/A	N/A

(continued)

(a) With Reactor Trip Breakers (RTBs) closed and Rod Control System capable of rod withdrawal.
(b) Below the P-10 (Power Range Neutron Flux) interlocks.
(c) Above the P-6 (Intermediate Range Neutron Flux) interlocks.
(d) Below the P-6 (Intermediate Range Neutron Flux) interlocks.
(e) With the RTBs open. In this condition, source range Function does not provide reactor trip but does provide indication.

Table 3.3.1-1 (page 2 of 7)
Reactor Trip System Instrumentation

FUNCTION	APPLICABLE MODES OR OTHER SPECIFIED CONDITIONS	REQUIRED CHANNELS	CONDITIONS	SURVEILLANCE REQUIREMENTS	ALLOWABLE VALUE	NOMINAL TRIP SETPOINT
6. Overtemperature ΔT	1,2	4	E	SR 3.3.1.1 SR 3.3.1.3 SR 3.3.1.6 SR 3.3.1.7 SR 3.3.1.12 SR 3.3.1.16 SR 3.3.1.17	Refer to Note 1 (Page 3.3.1-18)	Refer to Note 1 (Page 3.3.1-18)
7. Overpower ΔT	1,2	4	E	SR 3.3.1.1 SR 3.3.1.3 SR 3.3.1.6 SR 3.3.1.7 SR 3.3.1.12 SR 3.3.1.16 SR 3.3.1.17	Refer to Note 2 (Page 3.3.1-19)	Refer to Note 2 (Page 3.3.1-19)
8. Pressurizer Pressure						
a. Low	1(f)	4	M	SR 3.3.1.1 SR 3.3.1.7 SR 3.3.1.10 SR 3.3.1.16	≥ 1935 psig	1945 psig
b. High	1,2	4	E	SR 3.3.1.1 SR 3.3.1.7 SR 3.3.1.10 SR 3.3.1.16	≤ 2385 psig	2385 psig
9. Pressurizer Water Level - High	1(f)	3	M	SR 3.3.1.1 SR 3.3.1.7 SR 3.3.1.10	≤ 93%	92%
10. Reactor Coolant Flow - Low						
a. Single Loop	1(g)	3 per loop	N	SR 3.3.1.1 SR 3.3.1.7 SR 3.3.1.10 SR 3.3.1.16	≥ 90%	91%
b. Two Loops	1(h)	3 per loop	M	SR 3.3.1.1 SR 3.3.1.7 SR 3.3.1.10 SR 3.3.1.16	≥ 90%	91%
11. Undervoltage RCPs	1(f)	1 per bus	M	SR 3.3.1.9 SR 3.3.1.10 SR 3.3.1.16	≥ 5016 V	5082 V

(continued)

(f) Above the P-7 (Low Power Reactor Trips Block) interlock.

(g) Above the P-8 (Power Range Neutron Flux) interlock.

(h) Above the P-7 (Low Power Reactor Trips Block) interlock and below the P-8 (Power Range Neutron Flux) interlock.

Table 3.3.1-1 (page 3 of 7)
Reactor Trip System Instrumentation

FUNCTION	APPLICABLE MODES OR OTHER SPECIFIED CONDITIONS	REQUIRED CHANNELS	CONDITIONS	SURVEILLANCE REQUIREMENTS	ALLOWABLE VALUE	NOMINAL TRIP SETPOINT
12. Underfrequency RCPs	1(f)	1 per bus	M	SR 3.3.1.9 SR 3.3.1.10 SR 3.3.1.16	≥ 55.9 Hz	56.4 Hz
13. Steam Generator (SG) Water Level - Low Low	1,2	4 per SG	E	SR 3.3.1.1 SR 3.3.1.7 SR 3.3.1.10 SR 3.3.1.16	≥ 15%	16.7%
14. Turbine Trip						
a. Low Fluid Oil Pressure	1(g)	3	O	SR 3.3.1.10 SR 3.3.1.15	≥ 42 psig	45 psig
b. Turbine Stop Valve Closure	1(g)	4	P	SR 3.3.1.10 SR 3.3.1.15	≥ 1% open	≥ 1% open
15. Safety Injection (SI) Input from Engineered Safety Feature Actuation System (ESFAS)	1,2	2 trains	Q	SR 3.3.1.5 SR 3.3.1.14	NA	NA
16. Reactor Trip System Interlocks						
a. Intermediate Range Neutron Flux, P-6	2(d)	2	S	SR 3.3.1.11 SR 3.3.1.13	≥ 4E-11 amp	1E-10 amp
b. Low Power Reactor Trips Block, P-7	1	1 per train	T	SR 3.3.1.5	NA	NA
c. Power Range Neutron Flux, P-8	1	4	T	SR 3.3.1.11 SR 3.3.1.13	≤ 49% RTP	48% RTP
d. Power Range Neutron Flux, P-10	1,2	4	S	SR 3.3.1.11 SR 3.3.1.13	≥ 7% RTP and ≤ 11% RTP	10% RTP
e. Turbine Impulse Pressure, P-13	1	2	T	SR 3.3.1.12 SR 3.3.1.13	≤ 11% turbine impulse pressure equivalent	10% turbine impulse pressure equivalent

(continued)

(d) Below the P-6 (Intermediate Range Neutron Flux) interlocks.

(f) Above the P-7 (Low Power Reactor Trips Block) interlock.

(g) Above the P-8 (Power Range Neutron Flux) interlock.

Table 3.3.1-1 (page 4 of 7)
Reactor Trip System Instrumentation

FUNCTION	APPLICABLE MODES OR OTHER SPECIFIED CONDITIONS	REQUIRED CHANNELS	CONDITIONS	SURVEILLANCE REQUIREMENTS	ALLOWABLE VALUE	NOMINAL TRIP SETPOINT
17. Reactor Trip Breakers[i]	1,2	2 trains	R, V	SR 3.3.1.4	NA	NA
	3[a], 4[a], 5[a]	2 trains	C	SR 3.3.1.4	NA	NA
18. Reactor Trip Breaker Undervoltage and Shunt Trip Mechanisms	1,2	1 each per RTB	U	SR 3.3.1.4	NA	NA
	3[a], 4[a], 5[a]	1 each per RTB	C	SR 3.3.1.4	NA	NA
19. Automatic Trip Logic	1,2	2 trains	Q, V	SR 3.3.1.5	NA	NA
	3[a], 4[a], 5[a]	2 trains	C	SR 3.3.1.5	NA	NA

(a) With RTBs closed and Rod Control System capable of rod withdrawal.

(i) Including any reactor trip bypass breakers that are racked in and closed for bypassing an RTB.

Table 3.3.1-1 (page 5 of 7)
Reactor Trip System Instrumentation

Note 1: Overtemperature ΔT

The Overtemperature ΔT Function Allowable Value shall not exceed the following NOMINAL TRIP SETPOINT by more than 4.3 % of RTP.

$$\Delta T \frac{(1+\tau_1 s)}{(1+\tau_2 s)}\left(\frac{1}{1+\tau_3 s}\right) \le \Delta T_0 \left\{K_1 - K_2 \frac{(1+\tau_4 s)}{(1+\tau_5 s)}\left[T \frac{1}{(1+\tau_6 s)} - T'\right] + K_3 (P - P') - f_1(\Delta I)\right\}$$

Where: ΔT is measured RCS ΔT by loop narrow range RTDs, °F.
ΔT_0 is the indicated ΔT at RTP, °F.
s is the Laplace transform operator, sec-1.
T is the measured RCS average temperature, °F.
T' is the nominal Tavg at RTP, ≤ the value specified in the COLR.
P is the measured pressurizer pressure, psig
P' is the nominal RCS operating pressure, = the value specified in the COLR.

K_1 = Overtemperature ΔT reactor NOMINAL TRIP SETPOINT, as presented in the COLR,

K_2 = Overtemperature ΔT reactor trip heatup setpoint penalty coefficient, as presented in the COLR,

K_3 = Overtemperature ΔT reactor trip depressurization setpoint penalty coefficient, as presented in the COLR,

τ_1, τ_2 = Time constants utilized in the lead-lag controller for ΔT, as presented in the COLR,

τ_3 = Time constants utilized in the lag compensator for ΔT, as presented in the COLR,

τ_4, τ_5 = Time constants utilized in the lead-lag controller for T_{avg}, as presented in the COLR,

τ_6 = Time constants utilized in the measured T_{avg} lag compensator, as presented in the COLR, and,

$f_1(\Delta I)$ = a function of the indicated difference between top and bottom detectors of the power-range nuclear ion chambers; with gains to be selected based on measured instrument response during plant startup tests such that:

(i) for $q_t - q_b$ between the "positive" and "negative" $f_1(\Delta I)$ breakpoints as presented in the COLR; $f_1(\Delta I) = 0$, where q_t and q_b are percent RATED THERMAL POWER in the top and bottom halves of the core respectively, and $q_t + q_b$ is total THERMAL POWER in percent of RATED THERMAL POWER;

(continued)

Table 3.3.1-1 (page 6 of 7)
Reactor Trip System Instrumentation

(ii) for each percent imbalance that the magnitude of $q_t - q_b$ is more negative than the $f_1(\Delta I)$ "negative" breakpoint presented in the COLR, the ΔT Trip Setpoint shall be automatically reduced by the $f_1(\Delta I)$ "negative" slope presented in the COLR; and

(iii) for each percent imbalance that the magnitude of $q_t - q_b$ is more positive than the $f_1(\Delta I)$ "positive" breakpoint presented in the COLR, the ΔT Trip Setpoint shall be automatically reduced by the $f_1(\Delta I)$ "positive" slope presented in the COLR.

Note 2: Overpower ΔT

The Overpower ΔT Function Allowable Value shall not exceed the following NOMINAL TRIP SETPOINT by more than 2.6% of RTP.

$$\Delta T \frac{(1+\tau_1 s)}{(1+\tau_2 s}\left(\frac{1}{1+\tau_3 s}\right) \le \Delta T_0 \left\{K_4 - K_5 \frac{\tau_7 s}{1+\tau_7 s}\left(\frac{1}{1+\tau_6 s}\right)T - K_6\left[T\frac{1}{1+\tau_6 s} - T'\right] - f_2(\Delta I)\right\}$$

Where: ΔT is measured RCS ΔT by loop narrow range RTDs, °F.
ΔT_0 is the indicated ΔT at RTP, °F.
s is the Laplace transform operator, sec^{-1}.
T is the measured RCS average temperature, °F.
T' is the nominal T_{avg} at RTP, ≤ the value specified in the COLR.

K_4 = Overpower ΔT reactor NOMINAL TRIP SETPOINT as presented in the COLR,

K_5 = The value specified in the COLR for increasing average temperature and the value specified in the COLR for decreasing average temperature,

K_6 = Overpower ΔT reactor trip heatup setpoint penalty coefficient as presented in the COLR for $T > T'$ and K_6 = the value specified in the COLR for $T \le T'$,

τ_1, τ_2 = Time constants utilized in the lead-lag controller for ΔT, as presented in the COLR,

τ_3 = Time constants utilized in the lag compensator for ΔT, as presented in the COLR,

τ_6 = Time constants utilized in the measured T_{avg} lag compensator, as presented in the COLR,

τ_7 = Time constant utilized in the rate-lag controller for T_{avg}, as presented in the COLR, and

$f_2(\Delta I)$ = a function of the indicated difference between top and bottom detectors of the power-range nuclear ion chambers; with gains to be selected based on measured instrument response during plant startup tests such that:

(continued)

Table 3.3.1-1 (page 7 of 7)
Reactor Trip System Instrumentation

(i) for $q_t - q_b$ between the "positive" and "negative" $f_2(\Delta I)$ breakpoints as presented in the COLR; $f_2(\Delta I) = 0$, where q_t and q_b are percent RATED THERMAL POWER in the top and bottom halves of the core respectively, and $q_t + q_b$ is total THERMAL POWER in percent of RATED THERMAL POWER;

(ii) for each percent imbalance that the magnitude of $q_t - q_b$ is more negative than the $f_2(\Delta I)$ "negative" breakpoint presented in the COLR, the ΔT Trip Setpoint shall be automatically reduced by the $f_2(\Delta I)$ "negative" slope presented in the COLR; and

(iii) for each percent imbalance that the magnitude of $q_t - q_b$ is more positive than the $f_2(\Delta I)$ "positive" breakpoint presented in the COLR, the ΔT Trip Setpoint shall be automatically reduced by the $f_2(\Delta I)$ "positive" slope presented in the COLR.

1 Pt. The following conditions exist on Unit 1

- 1B ND train is in shutdown cooling alignment.
- 1B KC/RN trains operating in support of 1B ND train

Which one of the following ~~plant criteria~~ ~~SITUATIONS~~ conditions will result in the requirement to notify plant personnel of the activation of the TSC/OSC and EOF?

REFERENCE PROVIDED

A. NC temperature rise from 185 degrees to 195 degrees as a result of the loss of the operating train of ND.

B. NC temperature rise from 205 degrees to 215 degrees as a result of the loss of the operating train of KC and RN.

C. NC temperature rise from 210 degrees to 230 degrees as a result of loss of both trains of ND.

D. NC temperature rise from 175 degrees to 185 degrees as a result of a loss of both trains of KC.

DISCUSS All distractors

Bank Question: 1178 ***Answer: D***

1 Pt. The following conditions exist on Unit 1

- 1B ND train is in shutdown cooling alignment.
- 1B KC/RN trains operating in support of 1B ND train

Which one of the following plant criteria will result in the requirement to notify plant personnel of the activation of the TSC/OSC and EOF?

REFERENCE PROVIDED
RP/0/A/5700/000

A. NC temperature rise from 185 degrees to 195 degrees as a result of the loss of operating train of ND.

B. NC temperature rise from 205 degrees to 215 degrees as a result of the loss of operating train of KC and RN.

C. NC temperature rise from 210 degrees to 230 degrees as a result of loss of both trains of ND.

D. NC temperature rise from 175 degrees to 185 degrees as a result of a loss of both trains of KC.

Distracter Analysis: Student must consider using EALs for classification. Must be in an at least an ALERT to activate TSC, etc. Student must realize these are potential loss of shutdown coolant events. This is an SRO task to be able to use RP/000.

A. Incorrect
Plausible: This distracter results in the highest temperature if the student thinks that losing one ND will satisfy the EAL.

B. Incorrect:
Plausible: Not credible because in Mode 4

C. Incorrect:
Plausible: Same as above

D. Correct:

Level: SRO Only 10CFR55.43 (5)

KA: SYS 005 G2.1.14 (3.2/3.8)

Lesson Plan Objective: OP-MC-AP-19 Obj. 2

Source: NEW

Level of knowledge: Comprehension

References:

1. RP/1/A/5700/000 Enclosure 4.3 Loss of Shutdown Function
2. AP/19 Background Document page 7

Bank Question: 1178 ***Answer: D***

1 Pt. Which one of the following plant criteria will result in the requirement to notify plant personnel of the activation of the TSC/OSC and EOF?

REFERENCE PROVIDED
RP/0/A/5700/000

A. NC temperature rise from 185 degrees to 195 degrees as a result of the loss of operating train of ND.

B. NC temperature rise from 205 degrees to 215 degrees as a result of the loss of operating train of KC and RN.

C. NC temperature rise from 210 degrees to 230 degrees as a result of loss of both trains of ND.

D. NC temperature rise from 175 degrees to 185 degrees as a result of a loss of both trains of KC.

Distracter Analysis: Student must consider using EALs for classification. Must be in an at least an ALERT to activate TSC, etc. Student must realize these are potential loss of shutdown coolant events. This is an SRO task to be able to use RP/000.

A. Incorrect
Plausible: This distracter results in the highest temperature if the student thinks that losing one ND will satisfy the EAL.

B. Incorrect:
Plausible: Not credible because in Mode 4

C. Incorrect:
Plausible: Same as above

D. Correct:

Level: SRO Only 10CFR55.43 (5)

KA: SYS 005 G2.1.14 (3.2/3.8)

Lesson Plan Objective: OP-MC-AP-19 Obj. 2

Source: NEW

Level of knowledge: Comprehension

References:
1. RP/1/A/5700/000 Enclosure 4.3 Loss of Shutdown Function
2. AP/19 Background Document page 7

2.1 Conduct of Operations (continued)

2.1.9 **Ability to direct personnel activities inside the control room.**
(CFR: 45.5 / 45.12 / 45.13)
IMPORTANCE RO 2.5 SRO 4.0

2.1.10 **Knowledge of conditions and limitations in the facility license.**
(CFR: 43.1 / 45.13)
IMPORTANCE RO 2.7 SRO 3.9

2.1.11 **Knowledge of less than one hour technical specification action statements for systems.**
(CFR: 43.2 / 45.13)
IMPORTANCE RO 3.0 SRO 3.8

2.1.12 **Ability to apply technical specifications for a system.**
(CFR: 43.2 / 43.5 / 45.3)
IMPORTANCE RO 2.9 SRO 4.0

2.1.13 **Knowledge of facility requirements for controlling vital / controlled access.**
(CFR: 41.10 / 43.5 / 45.9 / 45.10)
IMPORTANCE RO 2.0 SRO 2.9

2.1.14 [redacted]
(CFR: 43.5 / 45.12)
IMPORTANCE RO 2.5 SRO 3.3

2.1.15 **Ability to manage short-term information such as night and standing orders.**
(CFR: 45.12)
IMPORTANCE RO 2.3 SRO 3.0

2.1.16 **Ability to operate plant phone, paging system, and two-way radio.**
(CFR: 41.10 / 45.12)
IMPORTANCE RO 2.9 SRO 2.8

2.1.17 **Ability to make accurate, clear and concise verbal reports.**
(CFR: 45.12 / 45.13)
IMPORTANCE RO 3.5 SRO 3.6

CLASSROOM TIME (Hours)

NLO	NLOR	LPRO	LPSO	LOR
		1.0	1.0	1.0

OBJECTIVES

	OBJECTIVE	NLO	NLOR	LPRO	LPSO	LOR
1	Concerning AP/1(2)/5500/19 (Loss of ND OR ND SYSTEM LEAKAGE): • State the purpose of the AP • Recognize the symptoms that would require implementation of the AP. AP19001			X	X	X
2	Given scenarios describing accident events and plant conditions, evaluate the basis for any caution, note, or step. AP19002			X	X	X

If NC temperature is above 200°F and makeup is needed, the choices are more limited. A high-pressure makeup path is required available. If makeup is needed, direction is given to use NV Pumps through NI-9 & 10 per that makeup enclosure. If subcooling or Pzr level can't be maintained, direction is given to use a NI Pump and align to the cold legs per that makeup enclosure. These direct makeup flow-path choices are provided here early in the body of the AP instead of relying on Enclosure 3 to ensure these actions are started in a timely manner. For mode 4 LOCAs, the worst case time critical operator required actions would require alignment of NV Pumps through NI-9 & 10 within 10 minutes and NI Pumps within 30 minutes.

Note that if this step requires two ECCS pumps, it is likely to violate Tech Specs with regard to cold overpressure protection (T.S. 3.4.12, allowing only one NV or NI pump capable of injecting into the RCS). DW-98-039 addresses this issue and revised the ERG Executive Volume Generic Issues- Tech Spec Violation. This revision will include APs along with EPs under the philosophy that while it is desirable to remain within the Tech Spec limits at all times, the overall objective is to protect the health and safety of the public and accident mitigation strategies may result in Tech Spec limit violation. *Note that in this scenario the intent of cold overpressure protection is met since the second pump is not made capable of injecting until it is known the NC breach is exceeding the makeup capability of the first pump.*

REFERENCES:
T.S. 3.4.12
DW-98-039
AP/34, WCAP-12476

STEP 6:

PURPOSE:

Ensure any required Emergency Plan event classifications are implemented.

DISCUSSION:

Los[redacted]mple, a loss of ND in conjunction [redacted]ure rise above 180°F is an [redacted] classification.

REFERENCES:

STEP 7:

PURPOSE:

Flow-path-controlling step to bypass the next step if Pzr level is high or inventory/subcooling can be maintained.

1 Pt. Unit 2 is operating at 100 % power. Given the following events and conditions:

- As a result of trouble shooting activities VI and nitrogen are isolated to 2SA-48ABC (SM FRM S/G 2C to TD CA Pump Isol).

Which one of the following actions ~~would you take as Control Room SRO~~ correct IS NN accordance with plant procedures?

A. **Implement AP/2/A/5500/001 (Steam Leak)**
Pull rods to return Tave to normal
Depress modulating resets to gain control of CA control valves

B. **Implement OP/2/A/6250/002 (Auxiliary Feedwater System)**
Reduce load to get power less than 100% RTP
Depress modulating resets to gain control of CA control valves

C. **Implement AP/2/A/5500/001 (Steam Leak)**
Reduce load to get power less than 100% RTP
Close 2SA-1 (SM 2C to TD CA pump Manual Isol)

D. **Implement OP/2/A/6250/002 (Auxiliary Feedwater System)**
Pull rods to return Tave to normal
Close 2SA-1 (SM 2C to TD CA pump Manual Isol)

Bank Question: 1179 ***Answer: C***

---

1 Pt. Unit 2 is operating at 100 % power. Given the following events and conditions:

- As a result of trouble shooting activities VI and nitrogen are isolated to 2SA-48ABC (SM FRM S/G 2C to TD CA Pump Isol).

Which one of the following actions would you take as Control Room SRO?

A. Implement AP/2/A/5500/001 (Steam Leak)
Pull rods to return Tave to normal
Depress modulating resets to gain control of CA control valves

B. Implement OP/2/A/6250/002 (Auxiliary Feedwater System)
Reduce load to get power less than 100% RTP
Depress modulating resets to gain control of CA control valves

C. Implement AP/2/A/5500/001 (Steam Leak)
Reduce load to get power less than 100% RTP
Close 2SA-1 (SM 2C to TD CA pump Manual Isol)

D. Implement OP/2/A/6250/002 (Auxiliary Feedwater System)
Pull rods to return Tave to normal
Close 2SA-1 (SM 2C to TD CA pump Manual Isol)

Distracter Analysis: There are two decisions that must be made in this question. One, which procedure to use and the other the correct way to stop the steam leak. The OP does not give guidance for closing SA-1. This action can be taken due to OMP 4-3 Conduct of Operations guidance on isolating a known leak.

A. Incorrect:
Plausible: Do not pull rods to get Tave back to normal this is done by reducing load. Also it is not necessary to depress the modulating valve resets to gain control of the CA valves.

B. Incorrect:
Plausible: You would not use the operating procedure for a steam leak.

C. Correct:.

D. Incorrect:
Plausible: You would not use the operating procedure for a steam leak.

Level: SRO Only. The decision as to which procedure to implement is an SRO function.

KA: SYS 061 A2.02 (3/2*/3.6*)

Lesson Plan: OPO-MC-AP-1

Lesson Plan Objective: OP-MC-AP-1 Obj. 3

Source: NEW

Level of knowledge: Comprehension

References:
1. OP-MC-AP-1 Background Document 3 and 4
2. AP/1/A/5500/01 pages 2 and 5
3. OMP 4-3 page 7-

SYSTEM: **061 Auxiliary / Emergency Feedwater (AFW) System**

ABILITY

A1 **Ability to predict and/or monitor changes in parameters (to prevent exceeding design limits) associated with operating the AFW controls including:**
(CFR: 41.5 / 45.5)

A1.01	S/G level	3.9	4.2
A1.02	S/G pressure	3.3*	3.6*
A1.03	Interactions when multi unit systems are cross tied	3.1*	3.6*
A1.04	AFW source tank level	3.9	3.9
A1.05	AFW flow/motor amps	3.6	3.7
A1.06	S/G hydrotest parameters	1.7	1.7

A2 **Ability to (a) predict the impacts of the following malfunctions or operations on the AFW; and (b) based on those predictions, use procedures to correct, control, or mitigate the consequences of those malfunctions or operations:**
(CFR: 41.5 / 43.5 / 45.3 / 45.13)

A2.01	Startup of MFW pump during AFW operation	2.5	2.6*
A2.02	[illegible]	[illegible]	[illegible]
A2.03	Loss of dc power	3.1	3.4
A2.04	pump failure or improper operation	3.4	3.8
A2.05	Automatic control malfunction	3.1*	3.4*
A2.06	Back leakage of MFW	2.7	3.0
A2.07	Air or MOV failure	3.4	3.5
A2.08	Flow rates expected from various combinations of AFW pump discharge valves	2.7*	2.9*
A2.09	Total loss of feedwater.	TBD	TBD

A3 **Ability to monitor automatic operation of the AFW, including:**
(CFR: 41.7 / 45.5)

A3.01	AFW startup and flows	4.2	4.2
A3.02	RCS cooldown during AFW operations	4.0	4.0
A3.03	AFW S/G level control on automatic start	3.9	3.9
A3.04	Automatic AFW isolation	4.1	4.2
A3.05	Recognition of leakage, using sump level changes	2.5	2.5*
A3.06	S/G blowdown/sampling isolation	2.2*	2.3

A4 **Ability to manually operate and monitor in the control room:**
(CFR: 41.7 / 45.5 to 45.8)

None

CLASSROOM TIME (Hours)

NLO	NLOR	LPRO	LPSO	LOR
		1.0	1.0	1.0

OBJECTIVES

	OBJECTIVE	NLO	NLOR	LPRO	LPSO	LOR
1	Explain the purpose for AP/01 (Steam Leak). AP01001			X	X	X
2	Analyze the mitigating strategy (major actions) contained in the procedure. AP01002			X	X	X
3	Given scenarios describing accident events and plant conditions, evaluate the basis for any caution, note, or step. AP01003			X	X	X
4	Given scenarios describing accident events and plant conditions, evaluate conditions which require application of continuous action steps. AP01004			X	X	X

STEP DESCRIPTION FOR AP-1

STEP 1:

PURPOSE:

Ensure timely action to trip reactor and close MSIVs for steam leaks of appropriate location and size.

DISCUSSION:

This step applies the management expectation to isolate a known leak for those instances where a steam leak is threatening personnel safety or equipment. The use of a foldout page for this concern ensures this criterion is applied throughout the procedure.

The foldout page also addresses uncontrolled cooldown concerns. If T-ave is less than 551°F and going down, S/G pressure will be decreasing toward 800 psig. Tripping the reactor and closing the MSIVs will be an anticipatory action to isolate the S/Gs prior to reaching the Main Steam Isolation setpoint. This action could serve to stop the uncontrolled cooldown very quickly.

Concerning inventory:
Some considerations on evaluating the rate of depletion are: 1) A 1% steam leak to the atmosphere is worth about 300 gpm inventory loss. 2) Unit 1 YM make up to the UST is about 300 gpm. If Unit 2 CST Pumps are aligned to pump to Unit 1 UST or CST, another 300 gpm is available. 3) The Unit 1 CST can be manually pumped up to the UST for a temporary gain of 300 gpm. Once the Unit 1 CST is pumped down, continued makeup will be from YM and Unit 2 CST Pumps. 4) A steam leak greater than 2% will probably result in decreasing secondary inventory, with the rate of decrease dependent on the size of the leak.

Closing the MSIVs, regardless of whether or not the reactor has been successfully tripped, is prudent from a personnel safety standpoint and has no adverse effects on ATWS accident analyses. As stated in the FSAR, a turbine trip and initiation of auxiliary feedwater are crucial in maintaining an adequate heat sink during an AWTS event. Closing the MSIVs would not impact these requirements. Also, stopping an uncontrolled steam release during an ATWS event has the added benefit of limiting positive reactivity additions due to the uncontrolled cooldown (The ATWS emergency procedure also takes actions to stop positive reactivity additions.)

REFERENCES:
PIP M-96-3555

STEP 2:

PURPOSE:

Prevent exceeding maximum thermal output and prevent an uncontrolled cooldown.

DISCUSSION:

Reactivity management dictates controlling reactor power less than or equal to 100%. Since steam demand determines reactor power, the increase in steam demand from the leak must be promptly compensated for by a decrease in steam demand from turbine load. During a transient, if reactor power is less than secondary power, temperature will decrease, adding positive reactivity. This will continue as long as reactor power is lower. The first part of the step (reactor power less than 100%) ensures maximum thermal power is not exceeded.

Determining reactor power less than 100% can be difficult during a steam leak transient. Thermal power best estimate is averaged over time, so there is a delay indicating reactor power has gone above 100%. The steam leak cools T-ave, which decreases the flux the excore NI's see, causing them to read potentially several percent low. One good real time indicator of reactor power is the NC loop D/T's.

The third part of the step (T-ave at T-ref) ensures the power transient is turned. If turbine load is cut to the extent that T-ave is restored to T-Ref, this indicates that reactor power has caught up with secondary power (or else T-ave couldn't be increasing). Reactor power catches up when the turbine load has been reduced by the amount of the steam leak.

The T-ave AT T-REF criterion is also included in this step for those scenarios involving a steam leak with the plant less than 100% power. Again, ensuring T-ave turned is a good indicator enough turbine load has been cut to control the rea ctivity transient.

This step is early in the procedure to prevent unnecessary isolation of L/D if NCS inventory can be maintained after reducing turbine load (by not allowing T-ave to continue to decrease).

REFERENCES:

ACTION/EXPECTED RESPONSE	RESPONSE NOT OBTAINED

B. Symptoms

- Reactor power greater than turbine power
- Reactor power greater than 100%
- "P/R OVER POWER ROD STOP" alarm
- NC T-Ave going down in an uncontrolled manner
- High containment pressure, temperature, humidity, or sump level without abnormal radiation
- Loss of secondary inventory
- Observed secondary steam leak.

C. Operator Actions

__ 1. Monitor foldout page.

2. Reduce turbine load to maintain the following:

__ • Excore NI's - LESS THAN OR EQUAL TO 100%.

__ • NC Loop D/T's - LESS THAN 60° F D/T.

__ • T-Ave - AT T-REF.

ACTION/EXPECTED RESPONSE	RESPONSE NOT OBTAINED
6. (Continued)	
c. Check the following - NORMAL: __ • Containment temperature __ • Containment pressure __ • Containment humidity __ • Containment floor and equipment sump level.	c. Perform the following: __ 1) IF conditions warrant, THEN evacuate containment. __ 2) Start all VL fans in high speed.
__ d. Check TD CA Pump - OFF.	__ d. IF operation of TD CA Pump is causing uncontrolled cooldown AND flow from TD CA Pump not required, THEN stop TD CA Pump PER OP/1/A/6250/002 (Auxiliary Feedwater System), Enclosure 4.4 (Manual Operation of #1 TD CA Pump).
__ e. Check valves on "STEAM LINE DRAIN VALVES" board (1MC-9) - CLOSED.	e. Perform the following: 1) Check the following SM line drains: __ • IF 1SM-78 (A SM Line Drain) open, THEN close 1SM-83 (A SM Line Drain Isol). __ • IF 1SM-84 (B SM Line Drain) open, THEN close 1SM-89 (B SM Line Drain Isol). __ • IF 1SM-90 (C SM Line Drain) open, THEN close 1SM-95 (C SM Line Drain Isol). __ • IF 1SM-96 (D SM Line Drain) open, THEN close 1SM-101 (D SM Line Drain Isol). __ 2) Dispatch operator to check other open steam line drain valves for proper operation.

7.3 Abnormal Procedure Usage:

Entry into an abnormal procedure is based on an evaluation of symptoms referenced in the respective procedure. There are times when symptoms exist that are **NOT** at the level that the applicable abnormal procedure would be implemented. Those situations would be addressed by existing operating and/or alarm response procedures. **WHEN** more than one AP is applicable at the same time, the Control Room SRO will determine how many procedures can be implemented at a time and their priority based upon manpower available and ability to maintain control of the situation running more than one procedure at a time.

7.4 Immediate and Subsequent Actions

Immediate actions are to be performed immediately upon the recognition of the event. Immediate actions should be performed prior to the SRO reading them. **WHEN** the SRO does read the immediate action, the RO will ensure that all the requirements of the step have been fully implemented.

Subsequent action steps should be performed as the SRO reads the steps. ROs should **NOT** perform steps prior to the SRO reading the step. This practice can mask "root cause" symptoms of the event in progress, especially when performing EP/1(2)/A/5000/E-0 (Reactor Trip or Safety Injection).

The only subsequent actions that can be taken prior to procedure direction are the following:

1. CA may be reset and controlled to a S/G when that S/G reaches its normal level setpoint.

2. Known leaks may be isolated. Note that if procedure covers isolation of leak, it is usually preferable to wait until procedure step is reached. Licensed operator may isolate leak prior to reaching step only if plant conditions require it to be done.

3. NC Pumps may be tripped on an Sp signal due to the loss of support functions unless the procedure has directed otherwise.

1 Pt(s)

Unit 1 is releasing the Ventilation Unit Condensate Drain Tank (VUCDT) using continuous release per approved station procedures. Just after the release was initiated, 1EMF-44 (Ventilation Unit Condensate Drain Tank) count rate indication fails to a reading of less than background.

Which one of the following statements correctly describes the effect on this LWR (Liquid Waste Release) **In Accordance With** OP/1/A/6500/001 A Ventilation Unit Condensate Drain Tank Operation?

A. **Continue the release. Document 0EMF-49 (Waste Liquid Disc) both OPERABLE and monitoring release flow path**

B. **Continue the release. Request updated LWR release and OP paperwork.**

C. **Stop release. Initiate batch release with updated LWR and OP paperwork.**

D. **Stop Release. Notify IAE to restore 1EMF-44 to OPERABLE prior to any VUCDT release.**

Bank Question: 1180 **Answer: C**

---

1 Pt(s)

Unit 1 is releasing the Ventilation Unit Condensate Drain Tank (VUCDT) using continuous release per approved station procedures. Just after the release was initiated, 1EMF-44 (Ventilation Unit Condensate Drain Tank) count rate indication fails to a reading of less than background.

Which one of the following statements correctly describes the effect on this LWR (Liquid Waste Release) **In Accordance With** OP/1/A/6500/001 A (Ventilation Unit Condensate Drain Tank Operation)?

A. **Continue the release. Document 0EMF-49 (Waste Liquid Disc) both OPERABLE and monitoring release flow path**

B. **Continue the release. Request updated LWR release and OP paperwork.**

C. **Stop release. Initiate batch release with updated LWR and OP paperwork.**

D. **Stop Release. Notify IAE to restore 1EMF-44 to OPERABLE prior to any VUCDT release.**

Distracter Analysis: Continuous release not allowed with 1EMF-44 inoperable.

A. **Incorrect**: Release paperwork and the OP. were created assuming 1EMF-44 operable. Release OP does not allow using 0EMF-49.
Plausible.

B. **Incorrect**: Release must be stopped and new LWR and OP paperwork created.
Plausible:

C. **Correct:**

D. **Incorrect**: 1EMF-44 not required for all VUCDT releases as long as the paperwork reflects all Tech. Spec./SLC requirements met, or release made to Floor Drain Tank.
Plausible:

Level: SRO Only 10CFR55.43(b)5

KA: SYS 073 A2.02 (2.7/3.2)

Lesson Plan Objective:

Source: NEW

Level of knowledge: Comprehension

References:
1. OP/2/A/6500/001 A pg. 1
2. OP/1/B/6200/105 pg.1

SYSTEM:	**073 Process Radiation Monitoring (PRM) System**		
K6	**Knowledge of the effect of a loss or malfunction of the following will have on the PRM system:** (CFR: 41.7 / 45.7)		
K6.01	Sensors and detectors	2.2	2.4
K6.02	Moving filters	2.0	2.1
K6.03	Sample blowers	1.9	2.0
	ABILITY		
A1	**Ability to predict and/or monitor changes in parameters (to prevent exceeding design limits) associated with operating the PRM system controls including:** (CFR: 41.5 / 45.7)		
A1.01	Radiation levels	3.2	3.5
A2	**Ability to (a) predict the impacts of the following malfunctions or operations on the PRM system; and (b) based on those predictions, use procedures to correct, control, or mitigate the consequences of those malfunctions or operations:** (CFR: 41.5 / 43.5 / 45.3 / 45.13)		
A2.01	Erratic or failed power supply	2.5	2.9*
A2.02	Detector failure	2.7	3.2
A2.03	Calibration drift	2.4	2.9*
A3	**Ability to monitor automatic operation of the PRM system, including:** (CFR: 41.7 / 45.5)		
	None		
A4	**Ability to manually operate and/or monitor in the control room:** (CFR: 41.7 / 45.5 to 45.8)		
A4.01	Effluent release	3.9	3.9
A4.02	Radiation monitoring system control panel	3.7	3.7
A4.03	Check source for operability demonstration	3.1	3.2

16.11 RADIOLOGICAL EFFLUENT CONTROLS

16.11.2 Radioactive Liquid Effluent Monitoring Instrumentation

COMMITMENT

The radioactive liquid effluent monitoring instrumentation channels shown in Table 16.11.2-1 shall be OPERABLE with their Alarm/Trip Setpoints set to ensure that the limits of SLC 16.11.1 are not exceeded.

AND

The Alarm/Trip Setpoints of these channels shall be determined and adjusted in accordance with the methodology and parameters in the OFFSITE DOSE CALCULATION MANUAL (ODCM).

APPLICABILITY

At all times.

REMEDIAL ACTIONS

----------NOTE----------
Separate Condition entry is allowed for each Function.

CONDITION	REQUIRED ACTION	COMPLETION TIME
A. One or more radioactive liquid effluent monitoring channels Alarm/Trip setpoint less conservative than required.	A.1 Suspend the release of radioactive liquid effluents monitored by the affected channel.	Immediately
	OR	
	A.2 Declare the channel inoperable.	Immediately
	OR	
	A.3 Adjust setpoint to within limit.	Immediately
B. One or more radioactive liquid effluent monitoring instrument channels inoperable.	B.1 Enter the Remedial Action specified in Table 16.11.2-1 for the channel(s).	Immediately

(continued)

REMEDIAL ACTIONS (continued)

CONDITION	REQUIRED ACTION	COMPLETION TIME
C. One channel inoperable.	C.1.1 Analyze two independent samples per TR 16.11.1.1.	Prior to initiating a release
	AND	
	C.1.2 Perform independent verification of the discharge line valving.	Prior to initiating a release
	AND	
	C.1.3.1 Perform independent verification of manual portion of the computer input for the release rate calculations performed by computer.	Prior to initiating a release
	OR	
	C.1.3.2 Perform independent verification of entire release rate calculations for calculations performed manually.	Prior to initiating a release
	AND	
	C.1.4 Restore channel to OPERABLE status.	14 days
	OR	
	C.2 Suspend the release of radioactive effluents via this pathway.	Immediately

(continued)

REMEDIAL ACTIONS (continued)

CONDITION	REQUIRED ACTION	COMPLETION TIME
D. One channel inoperable.	D.1 Perform an analysis of grab samples for radioactivity at a lower limit of detection per Table 16.11.1-1.	Once per 12 hours during releases when secondary specific activity is > 0.01 µCi/gm DOSE EQUIVALENT I-131 AND Once per 24 hours during releases when secondary specific activity is ≤ 0.01 µCi/gm DOSE EQUIVALENT I-131
	AND	
	D.2 Restore the channel to OPERABLE status.	30 days
E. One or more channels inoperable.	E.1 Perform an analysis of grab samples for radioactivity at a lower limit of detection per Table 16.11.1-1.	Once per 12 hours during releases
	AND	
	E.2 Restore the channel to OPERABLE status.	30 days

(continued)

REMEDIAL ACTIONS (continued)

CONDITION	REQUIRED ACTION	COMPLETION TIME
F. One or more flow rate measurement channels inoperable.	F.1 ----------NOTE---------- Pump performance curves generated in place may be used to estimate flow. ---------- Estimate the flow rate of the release.	Once per 4 hours during releases
	AND	
	F.2 Restore the channel to OPERABLE status.	30 days
G. RC minimum flow interlock inoperable.	G.1 Verify that the number of pumps providing dilution is greater than or equal to the number of pumps required.	Once per 4 hours during releases
	AND	
	G.2 Restore the channel to OPERABLE status.	30 days
H. Required Action and associated Completion Time of Condition C, D, E, F, or G not met.	H.1 Explain why the inoperability was not corrected within the specified Completion Time in the Annual Radioactive Effluent Release Report.	In the next scheduled Annual Radioactive Effluent Release Report

TESTING REQUIREMENTS

----------NOTE----------

Refer to Table 16.11.2-1 to determine which TRs apply for each Radioactive Liquid Effluent Monitoring channel.

TEST	FREQUENCY
TR 16.11.2.1 Perform CHANNEL CHECK.	24 hours
TR 16.11.2.2 ----------NOTE---------- The CHANNEL CHECK shall consist of verifying indication of flow. ---------- Perform CHANNEL CHECK.	Every 24 hours during periods of release
TR 16.11.2.3 Perform SOURCE CHECK.	Prior to each release
TR 16.11.2.4 Perform SOURCE CHECK.	31 days
TR 16.11.2.5 ----------NOTES---------- 1. For Instrument 1, the COT shall also demonstrate that automatic isolation of the pathway occurs if the instrument indicates measured levels above the Alarm/Trip Setpoint. 2. For Instruments 1 and 2, the COT shall also demonstrate that control room alarm annunciation occurs if the instrument indicates measured levels above the Alarm/Trip Setpoint; circuit failure and, a downscale failure. ---------- Perform CHANNEL OPERATIONAL TEST.	92 days
TR 16.11.2.6 Perform a CHANNEL CALIBRATION.	18 months

(continued)

TESTING REQUIREMENTS (continued)

TEST	FREQUENCY
TR 16.11.2.7 ----------NOTE---------- The initial CHANNEL CALIBRATION shall be performed using standards certified by the National Institute of Standards and Technology (NIST) or using standards obtained from suppliers that participate in measurement assurance activities with NIST. These standards shall permit calibrating the system over its intended range of energy and measurement range. For subsequent CHANNEL CALIBRATION, sources that have been related to the initial calibration shall be used. ---------- Perform a CHANNEL CALIBRATION.	24 months

TABLE 16.11.2-1

RADIOACTIVE LIQUID EFFLUENT MONITORING INSTRUMENTATION

INSTRUMENT	MINIMUM CHANNELS OPERABLE	REMEDIAL ACTION	TESTING REQUIREMENTS
1. Radioactivity Monitors Providing Alarm And Automatic Termination of Release			
a. Waste Liquid Effluent Line (EMF-49)	1 per station	A, C, H	TR 16.11.2.1 TR 16.11.2.3 TR 16.11.2.5 TR 16.11.2.7
b. EMF-49 Minimum Flow Device	1 per station	C, H	TR 16.11.2.5 TR 16.11.2.7
c. Containment Ventilation Unit Condensate Line (EMF-44)	1	A, E, H	TR 16.11.2.1 TR 16.11.2.4 TR 16.11.2.5 TR 16.11.2.7
d. EMF-44 Minimum Flow Device	1	E, H	TR 16.11.2.5 TR 16.11.2.7
2. Radioactivity Monitors Providing Alarm But Not Automatic Termination of Release			
a. Conventional Waste Water Treatment Line or Turbine Building Sump to RC (EMF-31)	1	A, D, H	TR 16.11.2.1 TR 16.11.2.4 TR 16.11.2.5 TR 16.11.2.7
b. EMF-31 Minimum Flow Device	1	D, H	TR 16.11.2.5 TR 16.11.2.7
3. Continuous Composite Samplers			
a. Containment Ventilation Unit Condensate Line	1	E, H	TR 16.11.2.2 TR 16.11.2.5 TR 16.11.2.6
b. Conventional Waste Water Treatment Line	1 per station	E, H	TR 16.11.2.2 TR 16.11.2.5 TR 16.11.2.6
c. Turbine Building Sump to RC	1	E, H	TR 16.11.2.2 TR 16.11.2.6

(Continued)

4. Flow Rate Measurement Devices			
a. Waste Liquid Effluent Line	1 per station	F, H	TR 16.11.2.2 TR 16.11.2.5 TR 16.11.2.6
b. Containment Ventilation Unit Condensate Line	1	F, H	TR 16.11.2.2 TR 16.11.2.5 TR 16.11.2.6
c. Conventional Waste Water Treatment Line	1 per station	F, H	TR 16.11.2.2 TR 16.11.2.5 TR 16.11.2.6
d. Turbine Building Sump to RC	1	F, H	TR 16.11.2.2 TR 16.11.2.6
5. RC Minimum Flow Interlock (1)	1 per station	G, H	TR 16.11.2.5

NOTES:
1. Minimum flow dilution is assured by an interlock which terminates waste liquid release if the number of RC pumps running falls below the number of pumps required for dilution. The required number of RC pumps for dilution is determined per station procedures.

BASES

The radioactive liquid effluent instrumentation is provided to monitor and control, as applicable, the releases of radioactive materials in liquid effluents during actual or potential releases of liquid effluents. The Alarm/Trip Setpoints of these instruments shall be calculated and adjusted in accordance with the methodology and parameters in the ODCM to ensure that the Alarm/Trip will occur prior to exceeding the limits stated in SLC 16.11.1. The OPERABILITY and use of this instrumentation is consistent with the requirements of General Design Criteria 60, 63, and 64 of Appendix A to 10 CFR Part 50. The Turbine Building Sump to RC Discharge Flow Measurement and Sampler Devices are for monitoring only and do not alarm or have any controls that require a quarterly COT.

REFERENCES

1. McGuire Nuclear Station Offsite Dose Calculation Manual (ODCM)

2. 10 CFR Part 50, Appendix A

1. Limits and Precautions

1.1 Transfer and handling of all waste shall be coordinated with Radwaste Chemistry.

1.2 VUCDT Pumps shall only be operated manually.

2. Initial Conditions

_____ 2.1 1EMF44 (L) (Cont Vent Drn Tank Out) operable **OR** Radwaste Chemistry has been notified to perform remedial actions per SLC 16.11.2.

_____ 2.2 VUCDT Minimum Flow Device (1WLFS7010) operable **OR** Radwaste Chemistry has been notified to perform remedial actions per SLC 16.11.2.

_____ 2.3 VUCDT Isolock Composite Sampler operable **OR** Radwaste Chemistry has been notified to perform remedial actions per SLC 16.11.2.

_____ 2.4 Either flow totalizer or local flow rate indication is operable. Otherwise, flow must be determined using pump capacity method.

_____ 2.5 Liquid Waste Monitoring and Disposal System aligned per OP/0/B/6200/029 (WM Operation).

3. Procedure

☐ 3.1 Evaluate all outstanding R&Rs that may impact performance of this procedure.

NOTE: VUCDT level monitoring is inoperable during pumping of VUCDT.

_____ 3.2 Evaluate TS 3.4.15.
SRO

3.3 Place VUCDT in recirculation, as follows:

_____ 3.3.1 Ensure 1/4 - 1/2 turn open 1WL-359 (VUCDT Pump Recirc Throttle).

3.3.2 Start desired VUCDT Pump(s):

- _____ "1A VUCDT Pump"
- _____ "1B VUCDT Pump"

_____ 3.3.3 Throttle 1WL-359 (VUCDT Pump Recirc Throttle) to obtain 25 - 30 psig discharge pressure.

Unit 1

1. Limits and Precautions

1.1 Transfer and handling of all waste shall be coordinated with Radwaste Chemistry.

1.2 VUCDT Pumps shall only be operated manually.

2. Initial Conditions

NOTE:	**IF** any component required by SLC (1EMF44, VUCDT flow totalizer or composite sampler) is inoperable, release shall be made using batch release method.

_____ 2.1 1EMF44 (L) (Cont Vent Drn Tank Out) operable.

_____ 2.2 VUCDT Minimum Flow Device (1WLFS7010) operable **OR** Radwaste Chemistry has been notified to perform remedial actions per SLC 16.11.2.

_____ 2.3 VUCDT Isolock Composite Sampler operable **OR** Radwaste Chemistry has been notified to perform remedial actions per SLC 16.11.2.

_____ 2.4 Liquid Waste Monitoring and Disposal System aligned per OP/0/B/6200/029 (WM Operation).

_____ 2.5 VUCDT level increasing at a rate such that Shift Radiation Protection agrees continuous VUCDT release documentation is justified.

_____ 2.6 VUCDT Level greater than 15% for recirculation for Radwaste Chemistry sampling.

3. Procedure

☐ 3.1 Evaluate all outstanding R&Rs that may impact performance of this procedure.

NOTE:	VUCDT level monitoring is inoperable during pumping of VUCDT.

_____ 3.2 Evaluate TS 3.4.15.
SRO

3.3 Place VUCDT in recirc as follows:

_____ 3.3.1 Ensure 1/4 - 1/2 turn open 1WL-359 (VUCDT Pump Recirc Throttle).

3.3.2 Start desired VUCDT Pump(s):

- _____ "1A VUCDT Pump"
- _____ "1B VUCDT Pump"

Unit 1

Continuous Use

1. Limits and Precautions

None

2. Initials Conditions

None

3. Procedure

☐ 3.1 Evaluate all outstanding R&Rs and Special Orders that may impact performance of this procedure.

_____ 3.2 **IF** 1WLCO5900 (Vent Unit Cond Drain Tank Flow Composite Sampler) has a loss of power, notify RP for compensatory actions.

_____ _____/_____
Person Contacted Date Time

_____ 3.3 **IF** any of the following components are inoperable, Unit 1 VUCDT shall **NOT** be placed in Continuous Release: {PIP M-95-00372)

- 1EMF44 (Unit 1 Cont Vent Drain Tank Rad Monitor)
- 1WLCO5900 (Vent Unit Cond Drain Tank Flow Composite Sampler)
- 1WLP5900 (Vent Unit Cond Drain Tank Flow) Totalizer
- 0WLCR5900 (Vent Unit Condenser Drain Tank Flow)
- 1WLFS7010 (1EMF-44 Outlet Flow) {PIP M-03-02739}

_____ 3.4 **IF** 1EMF44 (Unit 1 Cont Vent Drain Tank Rad Monitor), 1WLFS7010 (1EMF-44 Outlet Flow), or 1WLLP5900 (Vent Unit Cond Drain Tank Flow) inoperable: {PIP M-03-02739}

☐ 3.4.1 Obtain grab sample prior to release and every 12 hours while release in progress:

_____ 3.4.1.1 Open 1WL-403 (Unit 1 VUCDT Sample Isol).

☐ 3.4.1.2 Purge sample line a minimum of 30 seconds and collect 1000 ml sample.

_____ 3.4.1.3 Close 1WL-403 (Unit 1 VUCDT Sample Isol).

Unit 1

1 Pt. Given the following conditions:

- Unit 1 is at 100% power
- PZR PRESS CNTRL SELECT switch is selected to the 1-2 position
- Pressurizer Pressure Channel 1 fails LOW

performing the IAW of AP-11 AND

recommends. tell

The RO turns to you, the SRO, and tells you he is ~~going to immediately~~ swap controlling channels to 3-2 ~~in accordance with AP/1/A/5500/011 (Pressurizer Pressure Anomalies)~~.

Which one of the following ~~best~~ potrays describes ~~your~~ the correct IAW AP-11 response and the reason for that response?

A. Agree, because this action this will remove the faulty channel from the master controller circuitry.

B. Disagree, because this action will place a higher reading channel in service and could open a PZR PORV.

C. Agree, because this action will stabilize pressurizer pressure in a timely manner.

D. Disagree, because this action will cause the pressurizer spray valves to close increasing actual pressure.

Bank Question: 1181 ***Answer: B***

1 Pt. Given the following conditions:

- Unit 1 is at 100% power
- PZR PRESS CNTRL SELECT switch is selected to the 1-2 position
- Pressurizer Pressure Channel 1 fails LOW

The RO turns to you, the SRO, and tells you he is going to immediately swap controlling channels to 3-2 in accordance with AP/1/A/5500/011 (Pressurizer Pressure Anomalies).

Which one of the following best describes your response and the reason for that response?

A. Agree, because this action this will remove the faulty channel from the master controller circuitry.

B. Disagree, because this action will place a higher reading channel in service and could open a PZR PORV.

C. Agree, because this action will stabilize pressurizer pressure in a timely manner.

D. Disagree, because this action will cause the pressurizer spray valves to close increasing actual pressure.

Distracter Analysis:. Although immediately swapping controlling channels would work, and restore pressure quicker, it would be a poor trade-off to risk opening a Pzr PORV needlessly. In this particular scenario, the general guidance given Operators to immediately correct malfunctioning automatic control is superceded by the concern with the PORV and the AP guidance that addresses this concern

A. Incorrect:
Plausible: Operators are trained to manually mitigate malfunctioning automatic control functions

B. Correct:

C. Incorrect:
Plausible:: This would restore pressure more quickly than the AP/11 guidance, and do it in automatic.

D. Incorrect
Plausible: If the Operator thought the failed low channel would cause the spray valves to open to reduce pressure.

LEVEL: SRO Only 10CFR55.43b(5)

KA: SYS 016 G2.1.20 (4.3/4.2)

SOURCE: NEW

LEVEL OF KNOWLEDGE: Comprehensive

AUTHOR: CWS

LESSON: OP-MC-AP-11 Pressurizer Pressure Anomalies

OBJECTIVES: OP-MC-AP-11 Obj 3

REFERENCES- OP-MC-AP-11 page 8
AP/11 Background Document page 15

2.1 Conduct of Operations (continued)

2.1.18 **Ability to make accurate, clear and concise logs, records, status boards, and reports.**
(CFR: 45.12 / 45.13)
IMPORTANCE RO 2.9 SRO 3.0

2.1.19 **Ability to use plant computer to obtain and evaluate parametric information on system or component status.**
(CFR: 45.12)
IMPORTANCE RO 3.0 SRO 3.0

2.1.20 **Ability to execute procedure steps.**
(CFR: 41.10 / 43.5 / 45.12)
IMPORTANCE RO 4.3 SRO 4.2

2.1.21 **Ability to obtain and verify controlled procedure copy.**
(CFR: 45.10 / 45.13)
IMPORTANCE RO 3.1 SRO 3.2

2.1.22 **Ability to determine Mode of Operation.**
(CFR: 43.5 / 45.13)
IMPORTANCE RO 2.8 SRO 3.3

2.1.23 **Ability to perform specific system and integrated plant procedures during all modes of plant operation.**
(CFR: 45.2 / 45.6)
IMPORTANCE RO 3.9 SRO 4.0

2.1.24 **Ability to obtain and interpret station electrical and mechanical drawings.**
(CFR: 45.12 / 45.13)
IMPORTANCE RO 2.8 SRO 3.1

2.1.25 **Ability to obtain and interpret station reference materials such as graphs, monographs, and tables which contain performance data.**
(CFR: 41.10 / 43.5 / 45.12)
IMPORTANCE RO 2.8 SRO 3.1

2.1.26 **Knowledge of non-nuclear safety procedures (e.g. rotating equipment, electrical, high temperature, high pressure, caustic, chlorine, oxygen and hydrogen).**
(CFR: 41.10 / 45.12)
IMPORTANCE RO 2.2 SRO 2.6

CLASSROOM TIME (Hours)

NLO	NLOR	LPRO	LPSO	LOR
		2	2	1

OBJECTIVES

	OBJECTIVE	NLO	NLOR	LPRO	LPSO	LOR
1	Explain the purpose for AP/11 Pressurizer Pressure Anomalies). AP11001			X	X	X
2	Analyze the mitigating strategy (major actions) contained in the procedure. AP11002			X	X	X
3	Given scenarios describing accident events and plant conditions, evaluate the basis for any caution, note, or step. AP11003			X	X	X
4	Given scenarios describing accident events and plant conditions, evaluate conditions which require application of continuous action steps. AP11004			X	X	X

ACTION/EXPECTED RESPONSE	RESPONSE NOT OBTAINED
__ 17. **Check actual Pzr pressure - GOING UP.**	**Perform the following:** __ a. **IF** Pzr spray valve failed open or leaking, **THEN RETURN TO** Step 2. __ b. **IF** Pzr PORV failed open or leaking, **THEN RETURN TO** Step 2.
__ 18. **Check all Pzr pressure channels - INDICATING THE SAME.**	**IF either controlling channel is malfunctioning, THEN perform the following:** __ a. Place "PZR PRESS MASTER" in manual. __ b. Adjust "PZR PRESS MASTER" output to 50%. __ c. Place "PZR PRESS CNTRL SELECT" switch to backup channel. __ d. Place "PZR PRESS MASTER" in auto as desired.
19. **Check the following Pzr heaters - OFF:** __ • 1A __ • 1B __ • 1D.	**IF NC pressure is above desired pressure, THEN perform the following:** __ a. Place the Pzr heater mode select switches in manual. __ b. Turn heaters off as necessary to control pressure.
__ 20. **Check 1C Pzr heaters - MAINTAINING NC PRESSURE AT DESIRED PRESSURE.**	**Perform the following:** __ a. Place "PZR PRESS MASTER" in manual. __ b. Control pressure. __ c. **WHEN** Pzr pressure returns to normal **AND** automatic Pzr pressure control desired, **THEN** place "PZR PRESS MASTER" in auto.

Unit 1 STEP 17
Unit 2 STEP 15:

PURPOSE:

Direct the Operator to the appropriate section of the AP.

DISCUSSION:

The operator will perform this step if Pzr pressure is stable or going up. If pressure is going up, the last half of the AP is the appropriate section of the procedure to address these failures.

If pressure is stable, it may be due to a partially open PORV or Pzr Spray valve. In this case, Pzr heaters are maintaining pressure stable, and the first half of the AP is the appropriate place for responding to failed open PORVs and spray valves.

REFERENCES:

Unit 1 STEP 18
Unit 2 STEP 16:

PURPOSE:

To ensure operable Pzr pressure channels are selected for control.

DISCUSSION:

A Pzr pressure channel failing low (normally Channel I) can cause actual pressure to increase because the master controller would close sprays and turn on heaters. If this is the case, the RNO has the Operator place the master controller in manual, position it to 50% (this should stabilize the transient because this value should energize "C" heaters to 50%), then select out the bad channel from control, and return the master controller to automatic.

Note that Step 2 for a channel failing high has the Operator simply select out the failed channel. That action was taken because it is a quicker method of regaining pressure control. The reason this step doesn't simply select out the bad channel like Step 2 does is because when a channel fails **low**, swapping to a good channel that is reading higher than the failed low channel represents a large increase in signal to the master controller, potentially causing the PORV controlled by the master controller to open. Refer to the OEDB referenced below. For this reason, the controller is placed in manual, controller output is adjusted, bad channel selected out, and then controller is placed back in auto. Also, for a channel failing low, more time is available to do these control actions prior to a reactor trip, than for the case of a channel failing high.

Even though this step is not an immediate action, there is a time consideration in performing this step without delay. With the controlling channel failed low, as this step assumes, actual pressure is going up. If actual pressure gets to 2335 psig (in a few minutes), then the PORVs

7.12 Foldout Page

Many EPs and a few APs have been provided with a foldout page. This is located on the left-hand side of the Control Copy folder, and is intended to be visible when the procedure steps are being performed. The foldout page contains several pieces of information or actions which are applicable at any step in the procedure. Copies of the foldout page will be distributed to R0s (unless otherwise stated) when procedure calls for foldout page to be monitored.

7.13 Level of Detail

To allow efficient execution of the action steps in a procedure, all unnecessary detail has been removed. Much information which an operator is required to know (based on his training and experience) will **NOT** be included. **WHEN** an operator is given a task without all the details on how to accomplish that task (i.e. dump steam), the operator is expected to use knowledge to complete that particular task (i.e. block low pressure steamline isolation, reset main steam isolation and dump steam utilizing either the main steamline power operated relief valves or the main steam condenser dump valves).

7.14 Usage of a Configuration Control Card

7.14.1 A configuration control card shall be used in conjunction with EPs and APs as follows. Any time a component is positioned in the plant and the person doing the positioning does **NOT** have a procedure or R&R in his possession, a configuration control card shall be filled out.

7.14.2 Any component that is positioned on the control board to work around equipment failures or isolate leaks that are **NOT** specifically covered in the EP/AP shall be documented on the configuration control card. Example: AP-10 directs actions to isolate a leak if the source of the leak is known. This is a general statement which could lead to isolating one train of ND if it was a check valve leak. The closing of the valves and removal of power shall be recorded on a configuration control card.

1 Pt. Given the following conditions:

- Unit 1 is in a refueling outage.
- Core unload is in progress.
- The Spent Fuel Pool Level Low computer alarm has actuated.
- Actual pool level is -2 feet and slowly going down
- Borated water makeup is discovered not available

Which one ~~(1)~~ of the following statements describes the mitigating actions for this event?

A. **Implement AP/1/A/5500/41 (Loss of Spent Fuel Pool Cooling and Level), and begin makeup using Demineralized Water to restore level.**

B. **Implement AP/1/A/5500/40 (Loss of Refueling Cavity Level), secure the KF pump and makeup using Demineralized Water to restore level.**

C. **Implement AP/40 (Loss of Refueling Cavity Level), and begin makeup using Nuclear Service Water (RN) to restore level.**

D. **Implement AP/41 (Loss of Spent Fuel Pool Cooling and Level), secure the KF pump and begin makeup using RN to restore level.**

Bank Question: 1182 **Answer: B**

1 Pt. Given the following conditions:

- Unit 1 is in a refueling outage.
- Core unload is in progress.
- The Spent Fuel Pool Level Low computer alarm has actuated.
- Actual pool level is -2 feet and slowly going down
- Borated water makeup is discovered not available

Which one (1) of the following statements describes the mitigating actions for this event?

A. **Implement AP/1/A/5500/41 (Loss of Spent Fuel Pool Cooling and Level), and begin makeup using Demineralized Water to restore level.**

B. **Implement AP/1/A/5500/40 (Loss of Refueling Cavity Level), secure the KF pump and makeup using Demineralized Water to restore level.**

C. **Implement AP/40 (Loss of Refueling Cavity Level), and begin makeup using Nuclear Service Water (RN) to restore level.**

D. **Implement AP/41 (Loss of Spent Fuel Pool Cooling and Level), secure the KF pump and begin makeup using RN to restore level.**

Distracter Analysis:. Although symptoms for both AP/40 and AP/41 are met, AP/40 would be the priority AP because of the higher risk associated with uncovering fuel. Also AP/40 provides guidance for both locations loss of level. Although both YM and RN would be available as unborated water, YM is higher quality.

A. **Incorrect**:
Plausible: A symptom for AP/41 is a loss of pool level

B. **Correct**:

C. **Incorrect**:
Plausible:: The correct AP, plausible if the student believed urgency needed to restore level required RN.

D. **Incorrect**
Plausible: A symptom for AP/41 and plausible if thought RN needed to quickly restore level.

LEVEL: SRO Only

K/A: 033 A2.03 (3.1/3.5)

SOURCE: NEW

LEVEL OF KNOWLEDGE: Comprehensive

REFERENCES: OP-MC-FH-FC
OMP 4-3, Use of Abnormal and Emergency Procedures
AP/40 page 7

LESSON: OP-MC-FH-FC page 21 & 25

OBJECTIVE: OP-MC-FH-FC Obj. 6

SYSTEM:	**033 Spent Fuel Pool Cooling System (SFPCS)**		
K5	**Knowledge of the operational implication of the following concepts as they apply to the Spent Fuel Pool Cooling System:** (CFR: 41.5 / 45.7)		
K5.01	Pump theory	1.6	1.9
K5.02	Heat transfer	1.7	1.9
K5.03	D/P detector theory of OPS	1.5	1.6
K5.04	K-eff	2.1	2.3*
K5.05	Decay heat	2.1	2.3
K5.06	Shielding	2.1	2.5
K6	**Knowledge of the effect of a loss or malfunction on the following will have on the Spent Fuel Pool Cooling System:** (CFR: 41.7 / 45.7)		
K6.01	Pumps	1.7	1.9
K6.02	Heat exchangers	1.8	1.9
K6.03	Valves	1.7	1.7
K6.04	Motors	1.7	1.7
K6.05	Pressure and pressure detectors	1.7	1.7
K6.06	Temperature sensors	1.8	1.8
K6.07	Filters and demineralizers	1.7	1.8
	ABILITY		
A1	**Ability to predict and/or monitor changes in parameters (to prevent exceeding design limits) associated with Spent Fuel Pool Cooling System operating the controls including:** (CFR: 41.5 / 45.5)		
A1.01	Spent fuel pool water level	2.7	3.3
A1.02	Radiation monitoring systems	2.8	3.3
A1.03	SFPCS controls and sensors	2.4	2.7
A2	**Ability to (a) predict the impacts of the following malfunctions or operations on the Spent Fuel Pool Cooling System ; and (b) based on those predictions, use procedures to correct, control, or mitigate the consequences of those malfunctions or operations:** (CFR: 41.5 / 43.5 / 45.3 / 45.13)		
A2.01	Inadequate SDM	3.0	3.5
A2.02	Loss of SFPCS	2.7	3.0
A2.03	Abnormal spent fuel pool water level or loss of water level	3.1	3.5
A3	**Ability to monitor automatic operation of the Spent Fuel Pool Cooling System including:** (CFR: 41.7 / 45.5)		
A3.01	Temperature control valves	2.5*	2.7*
A3.02	Spent fuel leak or rupture	2.9	3.1

CLASSROOM TIME (Hours)

NLO	NLOR	LPRO	LPSO	LOR
		1.5	1.5	1.5

OBJECTIVES

	OBJECTIVE	NLO	NLOR	LPRO	LPSO	LOR
1	Describe the roles and responsibilities of Control Room Operators during Fuel Handling operations.			X	X	X
2	Describe the roles and responsibilities of Fuel Handling SRO's during Fuel Handling operations.				X	X
3	Describe how monitoring of core reactivity is accomplished during Fuel Handling.			X	X	X
4	Deleted					
5	Describe the requirements that must be met before **bypassing** a Fuel Handling Interlock.			X	X	X
6	Concerning AP-25, Spent Fuel Damage; AP-40, Loss of Refueling Canal; and AP-41, Loss of Spent Fuel Cooling or Level: • State the purpose of the AP • Given symptoms, state the AP and Case (if applicable)			X	X	X
7	Concerning the Technical Specifications related to the FC System;					
	• Given the LCO title, state the LCO (including any COLR values) and applicability.			X	X	X
	• For any LCO's that have action required within one hour, state the action.			X	X	X
	• Given a set of parameter values or system conditions, determine if any Tech. Spec. is (are) not met and any action(s) required within one hour.			X	X	X
	• Given a set of plant parameters values or system conditions and the appropriate Tech Specs, determine required action(s).				X	*
	• Discuss the basis for a given Tech. Spec. LCO or Safety Limit. *** SRO only**					

Operator Actions

NOTE Any available core location may be used when lowering a fuel assembly during emergency conditions.

If fuel movement is in progress: lower any assembly in the reactor building crane to fully down in the core, any assembly in the spent fuel crane to fully down, and any assembly in the upender to fully down. If they won't lower otherwise, manually release the brake and hand crank the hoist down. **NOTE: The sequence for lowering the hoist manually should be to put the emergency handwheel on the end of the hoist motor, hold it steady, while another person screws in the brake release (star shaped knob on a threaded stud) which when threaded in forces the brake disengaged. Care should be taken to remove the handwheel before electric operation of the hoist motor. The upender is similar. The bridge and trolly brake release is a lever, otherwise similar.** Dispatch Operator to locally move fuel transfer cart to the spent fuel (pit) side. Stop FWST Pump and close FW-13, and dispatch Operator to locally close KF-122. If KF-122 cannot be closed, then notify RP to begin surveys, consider installing the weir gate, and isolate the Spent Fuel Building (VF in filter mode and doors closed). Evacuate nonessential personnel from containment and Spent Fuel Building.

Try to identify and correct the cause of decreasing level. Verify seal integrity and air pressure to the Rx Vessel cavity seal and the Rx Vessel nozzle inspection port seals, and if not, reestablish VI to seals. Dispatch an Operator to locally ensure the Refueling Cavity Drains are closed. Check the S/G Nozzle Dams. Refer to AP/19, Loss of ND or ND System Leakage, while continuing with this procedure.

Makeup to the canal per OP/1/A/6200/13. **CAUTION:** Makeup to the SFP could dilute NC system boron concentration.

Monitor the Spent Fuel Pool level. If it gets to minus two feet, stop the KF Pump and turn off the lights. Initiated makeup per OP. If pool level low enough for radiation hazard, makeup from RN.

Ensure Containment Integrity with equipment hatch and airlock doors closed. If time permits, turn off canal underwater lights before they become uncovered. If necessary due to increasing radiation levels, consider using ND or NS to transfer water from the containment sump to the FWST for additional makeup capability.

Refer to RP/0/A/5700/00, Classification of Emergency.

OPERATOR ACTIONS

Announce on Page.

Dispatch an Operator to check the Pool is isolated from the refueling canal (either KF-122 closed, weir gate installed, or transfer tube blind flange installed). If not, go to AP/40, Loss of Refueling Canal Level.

If fuel handling is in progress, lower any fuel assembly in the crane, radioactive component, or fuel assembly in the upender to fully down. Release brake and hand crank hoist or upender, if required.

If the level is lower than minus 2 feet, stop the KF Pump, deenergize the underwater lights, place VF in the filter mode, close the doors, and notify RP. Initiate makeup per KF OP (Encl 4.4, Spent Fuel Pool Level Control).

Dispatch an Operator to locate and isolate the leak. When the leak is isolated and level has been returned to normal, start the KF Pump per the OP.

7.3 Abnormal Procedure Usage:

Entry into an abnormal procedure is based on an evaluation of symptoms referenced in the respective procedure. There are times when symptoms exist that are **NOT** at the level that the applicable abnormal procedure would be implemented. Those situations would be addressed by existing operating and/or alarm response procedures. **WHEN** more than one AP is applicable at the same time, the Control Room SRO will determine how many procedures can be implemented at a time and their priority based upon manpower available and ability to maintain control of the situation running more than one procedure at a time.

7.4 Immediate and Subsequent Actions

Immediate actions are to be performed immediately upon the recognition of the event. Immediate actions should be performed prior to the SRO reading them. **WHEN** the SRO does read the immediate action, the RO will ensure that all the requirements of the step have been fully implemented.

Subsequent action steps should be performed as the SRO reads the steps. ROs should **NOT** perform steps prior to the SRO reading the step. This practice can mask "root cause" symptoms of the event in progress, especially when performing EP/1(2)/A/5000/E-0 (Reactor Trip or Safety Injection).

The only subsequent actions that can be taken prior to procedure direction are the following:

1. CA may be reset and controlled to a S/G when that S/G reaches its normal level setpoint.

2. Known leaks may be isolated. Note that if procedure covers isolation of leak, it is usually preferable to wait until procedure step is reached. Licensed operator may isolate leak prior to reaching step only if plant conditions require it to be done.

3. NC Pumps may be tripped on an Sp signal due to the loss of support functions unless the procedure has directed otherwise.

ACTION/EXPECTED RESPONSE	RESPONSE NOT OBTAINED

10. **IF AT ANY TIME "KF POOL LEVEL" goes below minus two feet, THEN:**

__ a. Stop KF pump.

b. Dispatch operator to deenergize underwater lights before they become uncovered by opening the following breakers:

__ • Panelboard 1L18A, Breakers 1-5 (fuel bldg, 778, PP-48)

__ • Panelboard 1L18, Breakers 1-17 (aux bldg, 778, KK-51, located next to entrance to Upper Containment).

__ c. Ensure VF has been placed in filter mode by placing "VF EXH BYP DMPR CNTRL" to "CLOSE".

d. Ensure operator has been dispatched to ensure all Unit 1 spent fuel pool bldg doors are closed:

__ • Rollup doors

__ • Personnel doors.

__ e. Notify RP.

CAUTION **If necessary to makeup to the Spent Fuel Pool with unborated water, 1KF-122 (Fuel Transfer Tube Block) must be closed to prevent potentially diluting the NC System.**

NOTE Sub-criticality of the pool is assured without the presence of soluble boron. Do not hesitate to use RN in next step if pool level is dropping rapidly.

__ f. Initiate makeup to Spent Fuel Pool PER OP/1/A/6200/005 (Spent Fuel Cooling System), Enclosure 4.4 (Spent Fuel Pool Level Control).

__ 11. **Ensure Containment Integrity during Refueling Operations established PER PT/1/A/4200/002 C (Containment Closure/Integrity).**

1 Pt(s) An operator has been working as listed below:

02/15/2005	
1900	Starts Shift Turnover in control room
1930	Assumes shift duties
02/16/2005	
0730	Relieved of duties in control room
0800	Starts NRC requalification exam
1130	Completes NRC requalification exam
	Departs site for home and rest
1900	Starts shift turnover
1930	Assumes relief shift duties
02/17/2005	
0730	Relieved of duties in control room
	Departs site

What action (if any) must the operator take to comply with Tech Spec 5.2.2 regarding limits on overtime hours?

Reference Provided

A. No action required by the operator

B. Submit Request for Work Hours Extension Form to be approved by the Station Manager/Designee prior to 1130 on 02/16.

C. Submit Request for Work Hours Extension Form to be approved by the Station Manager/Designee prior to 1900 on 02/16.

D. Submit Request for Work Hours Extension Form to be approved by the Station Manager/Designee prior to 0630 on 02/17.

Discuss could subst and b?

change distract by rearranging to make not c

Bank Question: 1183 ***Answer: C***

1 Pt(s) An operator has been working as listed below:

02/15/2005	
1900	Starts Shift Turnover in control room
1930	Assumes shift duties
02/16/2005	
0730	Relieved of duties in control room
0800	Starts NRC requalification exam
1130	Completes NRC requalification exam
	Departs site for home and rest
1900	Starts shift turnover
1930	Assumes relief shift duties
02/17/2005	
0730	Relieved of duties in control room
	Departs site

What action (if any) must the operator take to comply with Tech Spec 5.2.2 regarding limits on overtime hours?

Reference Provided
Tech Spec 5.2.2

A. No action required by the operator

B. Submit Request for Work Hours Extension Form to be approved by the Station Manager/Designee prior to 1130 on 02/16.

C. Submit Request for Work Hours Extension Form to be approved by the Station Manager/Designee prior to 1900 on 02/16.

D. Submit Request for Work Hours Extension Form to be approved by the Station Manager/Designee prior to 0630 on 02/17.

Distracter Analysis: This question is testing three areas for potential work hours extension. The question hinges on shift turnover time and that it does not count for hours worked, but must be excluded from hours off.

A. **Incorrect:** Does exceed a limit
B. **Incorrect**: Does not exceed 16 in 24 hours.
C. **Correct**:
D. **Incorrect**: Does not exceed 28 in 48 hours
Plausible:

Level: SRO Only 10CFR55.43(b)2

KA: 2.1.5 (2.3/3.4)

Lesson Plan Objective: OP-MC-ADM-DIR, Obj 9

Source: BANK McGuire SRO Retake Exam 2003

Level of knowledge: Memory

References:
1. Tech Spec 5.2.2, Unit Staff
2. NSD-200, Appendix A, Request for Work Hours Extension

2.0 GENERIC KNOWLEDGES AND ABILITIES

2.1 Conduct of Operations

2.1.1 **Knowledge of conduct of operations requirements.**
(CFR: 41.10 / 45.13)
IMPORTANCE RO 3.7 SRO 3.8

2.1.2 **Knowledge of operator responsibilities during all modes of plant operation.**
(CFR: 41.10 / 45.13)
IMPORTANCE RO 3.0 SRO 4.0

2.1.3 **Knowledge of shift turnover practices.**
(CFR: 41.10 / 45.13)
IMPORTANCE RO 3.0 SRO 3.4

2.1.4 **Knowledge of shift staffing requirements.**
(CFR: 41.10 / 43.2)
IMPORTANCE RO 2.3 SRO 3.4

2.1.5 **Ability to locate and use procedures and directives related to shift staffing and activities.**
(CFR: 41.10 / 43.5 / 45.12)
IMPORTANCE RO 2.3 SRO 3.4

2.1.6 **Ability to supervise and assume a management role during plant transients and upset conditions.**
(CFR: 43.5 / 45.12 / 45.13)
IMPORTANCE RO 2.1 SRO 4.3

2.1.7 **Ability to evaluate plant performance and make operational judgments based on operating characteristics, reactor behavior, and instrument interpretation.**
(CFR: 43.5 / 45.12 / 45.13)
IMPORTANCE RO 3.7 SRO 4.4

2.1.8 **Ability to coordinate personnel activities outside the control room.**
(CFR: 45.5 / 45.12 / 45.13)
IMPORTANCE RO 3.8 SRO 3.6

5.2 Organization (continued)

5.2.2 Unit Staff

The unit staff organization shall include the following:

a. A non-licensed operator shall be assigned to each reactor containing fuel and an additional non-licensed operator shall be assigned for each control room from which a reactor is operating in MODES 1, 2, 3, or 4.

A total of three non-licensed operators are required for the two units.

b. At least one licensed Reactor Operator (RO) shall be present in the control room when fuel is in the reactor. In addition, while the unit is in MODE 1, 2, 3, or 4, at least one licensed Senior Reactor Operator (SRO) shall be present in the control room.

c. Shift crew composition may be less than the minimum requirement of 10 CFR 50.54(m)(2)(i) and 5.2.2.a and 5.2.2.g for a period of time not to exceed 2 hours in order to accommodate unexpected absence of on-duty shift crew members provided immediate action is taken to restore the shift crew composition to within the minimum requirements.

d. A Radiation Protection Technician shall be on site when fuel is in the reactor. The position may be vacant for not more than 2 hours, in order to provide for unexpected absence, provided immediate action is taken to fill the required position.

e. Administrative procedures shall be developed and implemented to limit the working hours of station staff who perform safety related functions (e.g., licensed SROs, licensed ROs, radiation protection technicians, auxiliary operators, and key maintenance personnel).

Adequate shift coverage shall be maintained without routine heavy use of overtime. The objective shall be to have operating personnel work a 12 hour day with alternating 48 hour and 36 hour weeks while the unit is operating. However, in the event that unforeseen problems require substantial amounts of overtime to be used, or during extended periods of shutdown for refueling, major maintenance, or plant modification, on a temporary basis the following guidelines shall be followed:

1. An individual should not be permitted to work more than 16 hours straight, excluding shift turnover time;

(continued)

5.2 Organization

5.2.2 Unit Staff (continued)

2. An individual should not be permitted to work more than 16 hours in any 24 hour period, nor more than 28 hours in any 48 hour period, nor more than 72 hours in any 7 day period, all excluding shift turnover time;

3. A break of at least 8 hours should be allowed between work periods, including shift turnover time;

4. Except during extended shutdown periods, the use of overtime should be considered on an individual basis and not for the entire staff on a shift.

Any deviation from the above guidelines shall be authorized in advance by the Station Manager or his designee, in accordance with approved administrative procedures, or by higher levels of management, in accordance with established procedures and with documentation of the basis for granting the deviation.

Controls shall be included in the procedures such that individual overtime shall be reviewed monthly by the Station Manager or his designee to ensure that excessive hours have not been assigned. Routine deviation from the above guidelines is not authorized.

f. The Operations Manager shall hold or have held an SRO license.

g. The Shift Technical Advisor (STA) shall provide advisory technical support to the Control Room Senior Reactor Operator (CRSRO) in the areas of thermal hydraulics, reactor engineering, and plant analysis with regard to the safe operation of the unit.

(continued)

OBJECTIVES

	OBJECTIVE	NLO	NLOR	LPRO	LPSO	LOR
8	Concerning NSD 109, Confined Space Entry: • Discuss the Authorized Entrants (person entering confined space) responsibility. • Discuss the Authorized Attendants (Hatchwatch) responsibility. ADMDIR011	X	X	X	X	X
9	Concerning NSD 200 Overtime Control: • State the maximum hours a worker at McGuire can work without an approved "Request For Work Hours Extension" form. ADMDIR012	X	X	X	X	X
10	Concerning NSD 202 Reportability: • Given a description of a plant occurrence, determine reportability using NSD 202. ADMDIR013			X	X	X
11	Concerning NSD 203, Operability: • State who is responsible for operability determinations, taking any appropriate action(s) required by Tech Specs and ensuring all compensatory actions are assigned. • Define the term valid as it applies to chemistry sampling analysis exceeding Tech Spec limits and Reactor Coolant Leakage calculation exceeding Tech Spec limits. ADMDIR014			X	X	X
12	Concerning NSD 304 Reactivity Management: • State the purpose of this NSD. ADMDIR015			X	X	X

APPENDIX A.200. REQUEST FOR WORK HOURS EXTENSION

1. Permission is requested for the individuals listed below to exceed the guidelines of Tech Spec 5.2.2 for hours that will be worked on the date shown. (Fill out ALL columns including: Full name, actual date work hour extension will occur, the letter(s) of the limit(s) that will be exceeded, estimated hours that will be worked beyond guidelines, Emp. ID, department or vendor name and assigned supervisor's name.)

NAME (Print First, MI & Last Name)	DATE/TIME THE WORK HOUR EXT. BEGINS	LIMIT a, b, c, d, e	EST. HRS. EXCEEDING GUIDELINE	Emp. ID (Same as Badge Number)	DEPARTMENT/ VENDOR NAME	ASSIGNED SUPV NAME

a. Working more than 16 hours straight (excluding shift turnover time)

b. Working more than 16 hours in any 24 hour period (excluding shift turnover time)

c. Working more than 24 hours (28 hours for MNS and ONS) in any 48 hour period (excluding shift turnover time)

d. Working more than 72 hours in any 7 day period (excluding shift turnover time)

e. Less than 8 hour break between scheduled work periods (excluding callouts, but including shift turnover time).
Note: Call-outs are not considered scheduled work periods and do not require an Appendix A form unless limit(s) a, b, c, d is exceeded due to the call-out. FFD and Management Procedures provisions apply to call-outs).

2. Specific reasons describing the need for exceeding the work hour guidelines. (Brief description of work to be performed and why specific individuals are needed to complete task.

_____

3. I have assessed the fitness for continued duty of the above named individual(s). The assessment included an evaluation of the working conditions, and the individual(s) mental and physical ability to complete the task safely. I find the individual(s) fitness satisfactory to safely complete the assignment. I will periodically re-assess their status as appropriate to determine their ability to continue. **NOTE**: The FFD assessment must be done within 4 hours prior to the beginning of the task date/time the work hour extension begins.

Signed:_____ Supv. ID: _____ Date:_____Time:_____

Supervisor/Temp. Supervisor/Designee of employee(s)/vendor(s)*

4. Authorization is hereby granted for the individual(s) listed above to exceed the work hour guidelines of Tech Spec 5.2.2.

Signed:_____ Station Mgr./Designee ID: _____

Date:_____Time:_____ AM PM

Station Manager/Designee** (See Section 200.5 for approved list of designees)

Authorization obtained via phone From: _____ Date:_____ Time:_____

By: _____ Date:_____ Time:_____

5. If approval is not obtained prior to overtime being exceeded, document reasons below and initiate a PIP.

   PIP #:_____ Comments: _____

6. Route the completed form to the Human Resource Manager.

***Supervisor shall not assess himself/herself for FFD concerns.**

****Supervisor of employee(s)/vendor(s) and Station Manager/Designee shall not be the same person.**

Bank Question: 121.1 ***Answer: C***

---

1 Pt(s) An operator has been working as listed below:

<u>10/15/2003</u>	
1900	Starts Shift Turnover in control room
1930	Assumes shift duties
<u>10/16/2003</u>	
0730	Relieved of duties in control room
0800	Starts NRC requalification exam
1130	Completes NRC requalification exam
	<u>Departs site for home and rest</u>
1900	Starts shift turnover
1930	Assumes relief shift duties
0730	Relieved of duties in control room
	Departs site

What action (if any) must the operator take to comply with Tech Spec 5.2.2 regarding limits on overtime hours?

Reference Provided
Tech Spec 5.2.2

A. No action required by the operator

B. Notify the OSM and obtain approval prior to assuming the watch at 1900 on 10/16.

C. Submit Request for Work Hours Extension Form to be approved by the Station Manager/Designee prior to 1900 on 10/16.

D. Submit Request for Work Hours Extension Form to be approved by the Station Manager/Designee prior to 0330 on 10/17.

Distracter Analysis:
A. Incorrect:
B. Incorrect: .
C. Correct:
Plausible:
D. Incorrect:

Plausible:

Level: SRO 10CFR55.43(b)2

KA: 2.1.5 (2.3/3.4)

Lesson Plan Objective: OP-MC-ADM-DIR, Obj 9

Source: BANK

Level of knowledge: Memory

References:
1. Tech Spec 5.2.2, Unit Staff
2. NSD-200, Appendix A, Request for Work Hours Extension

1 Pt. Given the following conditions on Unit 1:

July 31, 2345

- ~~Today's date is August 1.~~
- 45% Rated Thermal Power.
- Transformer SATA is not available.
- ON AUG 1 At 0000, Main Power Transformer "1A" is tagged out for maintenance and will be unavailable for 48 hours.
- ON AUG 1 At 0800, "1A" D/G is declared inoperable due to a fire from a fuel oil leak.

Which one of the following best describes the Technical Specification requirements for these conditions?

Reference Provided

A. No actions are required since Main Transformer "1A" will be returned to service within 48 hours.

B. Be in HOT STANDBY before 2000 hours on August 1.

C. Be in HOT STANDBY before 0200 hours on August 2.

D. Apply Tech. Spec. 3.0.3 at 2000 hours on August 1 and be in HOT STANDBY before 0300 on August 2.

Bank Question: 1184 ***Answer: C***

1 Pt. Given the following conditions on Unit 1:

- Today's date is August 1.
- 45% Rated Thermal Power.
- Transformer SATA is not available.
- At 0000, Main Power Transformer "1A" is tagged out for maintenance and will be unavailable for 48 hours.
- At 0800, "1A" D/G is declared inoperable due to a fire from a fuel oil leak.

Which one of the following best describes the Technical Specification requirements for these conditions?

Reference Provided
T.S. 3.8.1
T.S. 3.8.9

A. No actions are required since Main Transformer "1A" will be returned to service within 48 hours.

B. Be in HOT STANDBY before 2000 hours on August 1.

C. Be in HOT STANDBY before 0200 hours on August 2.

D. Apply Tech. Spec. 3.0.3 at 2000 hours on August 1 and be in HOT STANDBY before 0300 on August 2.

Distracter Analysis:.

A. Incorrect:
Plausible: If student does not realize that the inoperability place them in a separate T.S. "condition"

B. Incorrect: Student misapplies T.S. condition "D".
Plausible:

C. Correct:

D. Incorrect
Plausible: If student incorrectly assumes T.S. 3.0.3 applies.

LEVEL: SRO ONLY 10CFR55.43b(2)

KA: G2.1.12 (2.9/4.0)

SOURCE: Modified. McGuire Requal. Exam Bank.

LEVEL OF KNOWLEDGE: Analysis

AUTHOR: CWS

LESSON: OP-MC-EL-EP

OBJECTIVES: OP-MC-EL-EP obj 39

REFERENCES: T.S.3.8.1
T.S.3.8.9

2.1 Conduct of Operations (continued)

2.1.9 **Ability to direct personnel activities inside the control room.**
(CFR: 45.5 / 45.12 / 45.13)
IMPORTANCE RO 2.5 SRO 4.0

2.1.10 **Knowledge of conditions and limitations in the facility license.**
(CFR: 43.1 / 45.13)
IMPORTANCE RO 2.7 SRO 3.9

2.1.11 **Knowledge of less than one hour technical specification action statements for systems.**
(CFR: 43.2 / 45.13)
IMPORTANCE RO 3.0 SRO 3.8

2.1.12 **Ability to apply technical specifications for a system.**
(CFR: 43.2 / 43.5 / 45.3)
IMPORTANCE RO 2.9 SRO 4.0

2.1.13 **Knowledge of facility requirements for controlling vital / controlled access.**
(CFR: 41.10 / 43.5 / 45.9 / 45.10)
IMPORTANCE RO 2.0 SRO 2.9

2.1.14 **Knowledge of system status criteria which require the notification of plant personnel.**
(CFR: 43.5 / 45.12)
IMPORTANCE RO 2.5 SRO 3.3

2.1.15 **Ability to manage short-term information such as night and standing orders.**
(CFR: 45.12)
IMPORTANCE RO 2.3 SRO 3.0

2.1.16 **Ability to operate plant phone, paging system, and two-way radio.**
(CFR: 41.10 / 45.12)
IMPORTANCE RO 2.9 SRO 2.8

2.1.17 **Ability to make accurate, clear and concise verbal reports.**
(CFR: 45.12 / 45.13)
IMPORTANCE RO 3.5 SRO 3.6

	OBJECTIVE	NLO	NLOR	LPRO	LPSO	LOR
39	Concerning the Technical Specifications related to the Main Power Distribution System (Tech Specs 3.8.1, 3.8.2, 3.8.9, 3.8.10):			X	X	X
	• Given the LCO title, state what constitutes the LCO and applicability as stated in Tech Spec bases.			X	X	X
	• For any LCO's that have action required within one hour, state the action.			X	X	X
	• Given a set of parameter values or system conditions, determine if any Tech Spec LCO's is (are) not met and any action(s) required within one hour.			X	X	X
	• Given a set of plant parameters or system conditions and the appropriate Tech Specs, determine required actions.			X	X	*
	• Discuss the bases for a given Tech Spec LCO or Safety Limit.			X	X	*
	*** SRO Only**					

3.8 ELECTRICAL POWER SYSTEMS

3.8.1 AC Sources — Operating

LCO 3.8.1 The following AC electrical sources shall be OPERABLE:

a. Two qualified circuits between the offsite transmission network and the Onsite Essential Auxiliary Power System; and

b. Two diesel generators (DGs) capable of supplying the Onsite Essential Auxiliary Power Systems;

AND

The automatic load sequencers for Train A and Train B shall be OPERABLE.

APPLICABILITY: MODES 1, 2, 3, and 4.

ACTIONS

CONDITION	REQUIRED ACTION	COMPLETION TIME
A. One offsite circuit inoperable.	A.1 Perform SR 3.8.1.1 for OPERABLE offsite circuit.	1 hour AND Once per 8 hours thereafter
	AND	
	A.2 Declare required feature(s) with no offsite power available inoperable when its redundant required feature(s) is inoperable.	24 hours from discovery of no offsite power to one train concurrent with inoperability of redundant required feature(s)
	AND	
		(continued)

ACTIONS

CONDITION	REQUIRED ACTION	COMPLETION TIME
A. (continued)	A.3 Restore offsite circuit to OPERABLE status.	72 hours AND 6 days from discovery of failure to meet LCO
B. One DG inoperable.	B.1 Perform SR 3.8.1.1 for the offsite circuit(s).	1 hour AND Once per 8 hours thereafter
	AND	
	B.2 Declare required feature(s) supported by the inoperable DG inoperable when its required redundant feature(s) is inoperable.	4 hours from discovery of Condition B concurrent with inoperability of redundant required feature(s)
	AND	
	B.3.1 Determine OPERABLE DG is not inoperable due to common cause failure.	24 hours
	OR	
	B.3.2 Perform SR 3.8.1.2 for OPERABLE DG.	24 hours
	AND	
		(continued)

ACTIONS

CONDITION	REQUIRED ACTION	COMPLETION TIME
B. (continued)	B.4 Restore DG to OPERABLE status.	72 hours AND 6 days from discovery of failure to meet LCO
C. Two offsite circuits inoperable.	C.1 Declare required feature(s) inoperable when its redundant required feature(s) is inoperable.	12 hours from discovery of Condition C concurrent with inoperability of redundant required feature(s)
	AND	
	C.2 Restore one offsite circuit to OPERABLE status.	24 hours

(continued)

ACTIONS (continued)

CONDITION	REQUIRED ACTION	COMPLETION TIME
D. One offsite circuit inoperable. AND One DG inoperable.	----------NOTE---------- Enter applicable Conditions and Required Actions of LCO 3.8.9, "Distribution Systems — Operating," when Condition D is entered with no AC power source to any train. ---------- D.1 Restore offsite circuit to OPERABLE status. OR D.2 Restore DG to OPERABLE status.	 12 hours 12 hours
E. Two DGs inoperable.	E.1 Restore one DG to OPERABLE status.	2 hours
F. One automatic load sequencer inoperable.	F.1 Restore automatic load sequencer to OPERABLE status.	12 hours
G. Required Action and associated Completion Time of Condition A, B, C, D, E, or F not met.	G.1 Be in MODE 3. AND G.2 Be in MODE 5.	6 hours 36 hours
H. Three or more AC sources inoperable.	H.1 Enter LCO 3.0.3.	Immediately

SURVEILLANCE REQUIREMENTS

SURVEILLANCE		FREQUENCY
SR 3.8.1.1	Verify correct breaker alignment and indicated power availability for each offsite circuit.	7 days
SR 3.8.1.2	----------NOTES---------- 1. Performance of SR 3.8.1.7 satisfies this SR. 2. All DG starts may be preceded by an engine prelube period and followed by a warmup period prior to loading. 3. A modified DG start involving idling and gradual acceleration to synchronous speed may be used for this SR as recommended by the manufacturer. When modified start procedures are not used, the time, voltage, and frequency tolerances of SR 3.8.1.7 must be met. ---------- Verify each DG starts from standby conditions and achieves steady state voltage ≥ 3740 V and ≤ 4580 V, and frequency ≥ 58.8 Hz and ≤ 61.2 Hz.	31 days

(continued)

3.8 ELECTRICAL POWER SYSTEMS

3.8.9 Distribution Systems — Operating

LCO 3.8.9 Train A and Train B AC, four channels of DC, and four AC vital buses electrical power distribution subsystems shall be OPERABLE.

APPLICABILITY: MODES 1, 2, 3, and 4.

ACTIONS

CONDITION	REQUIRED ACTION	COMPLETION TIME
A. One or more AC electrical power distribution subsystem(s) inoperable.	A.1 Restore AC electrical power distribution subsystem(s) to OPERABLE status.	8 hours AND 16 hours from discovery of failure to meet LCO
B. One AC vital bus inoperable.	B.1 Restore AC vital bus subsystem to OPERABLE status.	2 hours AND 16 hours from discovery of failure to meet LCO

(continued)

ACTIONS (continued)

CONDITION	REQUIRED ACTION	COMPLETION TIME
C. One channel of DC electrical power distribution subsystem inoperable.	C.1 Restore DC channel of electrical power distribution subsystem to OPERABLE status.	2 hours AND 16 hours from discovery of failure to meet LCO
D. Required Action and associated Completion Time not met.	D.1 Be in MODE 3. AND D.2 Be in MODE 5.	6 hours 36 hours
E. Two trains with inoperable distribution subsystems that result in a loss of safety function.	E.1 Enter LCO 3.0.3.	Immediately

SURVEILLANCE REQUIREMENTS

SURVEILLANCE		FREQUENCY
SR 3.8.9.1	Verify correct breaker alignments and voltage to AC, DC, and AC vital bus electrical power distribution subsystems.	7 days

Objective # 14
Objective # 15
Objective # 29

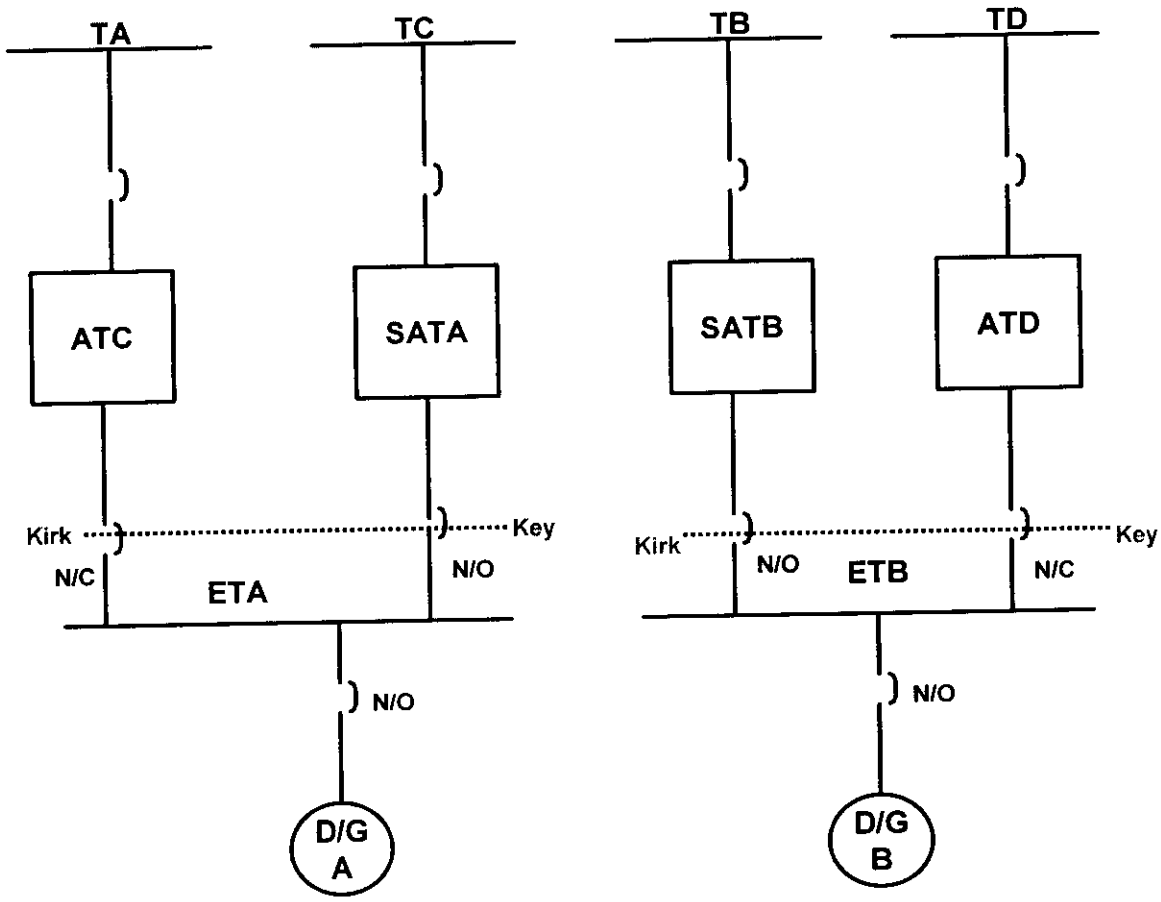

Transformers (SATA and SATB) are the alternate power supplies to Essential Busses (1ETA, 1ETB, 2ETA, and 2ETB). The primary windings of the independent full size transformers (SATA and SATB) are connected to the associated 6.9 KV Busses (1TC and 2TC for SATA) and (1TB, and 2TB for SATB). The secondary windings are alternately connected to one 4.16 bus (1ETA, 1ETB, 2ETA, and 2ETB). During normal operation transformers SATA and SATB will be connected on the 6.9 KV side with their unit 2 power supply and will not be connected to either units 4.16 KV Bus. Each auxiliary transformer (SATA and SATB) is sized to carry all the safe shutdown loads associated with the train of components to which it is connected. The normal operating voltage on the high side of the transformers is 6.9 KV while the low side voltage is 4.16 KV for both Unit 1 and 2.

1 Pt. Unit 1 is in Mode 3. The NI system engineer has requested that the 1A-NI pump be started with the discharge valve throttled to 75% open to determine starting current. The evolution is NOT described in current procedures, nor the Final Safety Analysis Report.

Which one of the following describes the correct actions of the OSM for this request?

A. Approve the test without restrictions only after providing a Level 1 Pre-job brief is performed.

B. Approve the test only after removal and restoration paperwork ensures configuration control.

C. Approve the test only after a 10CFR 50.59 Screening evaluation has been performed and approved.

D. Approve the test only if an STA with an engineering degree agrees with the test method.

Bank Question: 1185 ***Answer: C***

1 Pt. Unit 1 is in Mode 3. The NI system engineer has requested that the 1A NI pump be started with the discharge valve throttled to 75% open to determine starting current. The evolution is NOT described in current procedures, nor the Final Safety Analysis Report.

Which one of the following describes the correct actions of the OSM for this request?

A. Approve the test without restrictions only after providing a Level 1 Pre-job brief is performed.

B. Approve the test only after removal and restoration paperwork ensures configuration control.

C. Approve the test only after a 10CFR 50.59 Screening evaluation has been performed and approved.

D. Approve the test only if an STA with an engineering degree agrees with the test method.

Distracter Analysis:.

A. Incorrect:
Plausible:
B. Incorrect:
Plausible:
C. Incorrect:
Plausible:
D. Incorrect
Plausible:

LEVEL: SRO

KA: G2.2.10 (1.9/3.3)

SOURCE: BANK Byron 1 2001 NRC Exam

LEVEL OF KNOWLEDGE: Memory

AUTHOR: CWS

LESSON:

OBJECTIVES: OP-MC-

REFERENCES:

2.2 Equipment Control (Continued)

2.2.9 **Knowledge of the process for determining if the proposed change, test or experiment increases the probability of occurrence or consequences of an accident during the change, test, or experiment.**
(CFR: 43.3 / 45.13)
IMPORTANCE RO 2.0 SRO 3.3

2.2.10 **Knowledge of the process for determining if the margin of safety, as defined in the basis of any technical specification is reduced by a proposed change, test or experiment.**
(CFR: 43.3 / 45.13)
IMPORTANCE RO 1.9 SRO 3.3

2.2.11 **Knowledge of the process for controlling temporary changes.**
(CFR: 41.10 / 43.3 / 45.13)
IMPORTANCE RO 2.5 SRO 3.4*

2.2.12 **Knowledge of surveillance procedures.**
(CFR: 41.10 / 45.13)
IMPORTANCE RO 3.0 SRO 3.4

2.2.13 **Knowledge of tagging and clearance procedures.**
(CFR: 41.10 / 45.13)
IMPORTANCE RO 3.6 SRO 3.8

2.2.14 **Knowledge of the process for making configuration changes.**
(CFR: 43.3 / 45.13)
IMPORTANCE RO 2.1 SRO 3.0

2.2.15 **Ability to identify and utilize as-built design and configuration change documentation to ascertain expected current plant configuration and operate the plant.**
(CFR: 43.3 / 45.13)
IMPORTANCE RO 2.2 SRO 2.9

2.2.16 **Knowledge of the process for making of field changes.**
(CFR: 41.10 / 45.13)
IMPORTANCE RO 1.9 SRO 2.6*

2.2.17 **Knowledge of the process for managing maintenance activities during power operations.**
(CFR: 43.5 / 45.13)
IMPORTANCE RO 2.3 SRO 3.5

Duke Power Company McGuire Nuclear Station	Procedure No. **OP/ 0/A/6100/028**
	Revision No. **011**
Operations Troubleshooting/Altering System Alignment	
Continuous Use	Electronic Reference No. **MC0095QU**

PERFORMANCE

* * * * * * * * * * UNCONTROLLED FOR PRINT * * * * * * * * * *

(ISSUED) - PDF Format

Revision History (significant issues, limited to one page)	
Rev 011	(07/29/03) • Made various procedure enhancements. • Revised the QR/SRO approval and review requirements.
Rev 010	(01/29/2003) Added new approved Applicability Determination form.
Rev 009	(08/21/01) Reworded Step 3.14 to"Place routing Stamp in remarks section of cover sheet, check (✓) "Other" and fill in " Operations Support Manager (MG01OP). {PIP 01-2611}
Rev 008	(6-4-01) –Added Applicability Determination Form. –Replaced existing 10CFR50.59 Screening Sheet with new 10CFR50.59 Screening Sheet.
Rev 007	(4-16-01) -On page 7, added step to route a copy of the procedure to the Operations Support Manager. This change is administrative in nature therefore does not require a 10CFR50.59 evaluation. -On page 7, added step to place a copy of Attachment 2 in Ops Toolkit. This change is administrative in nature therefore does not require a 10CFR50.59 evaluation.
Rev 006	(8/23/00) • Expanded use to not only include troubleshooting activities, but also altering system alignment for other reasons, such as for support of maintenance activities or return from maintenance. • Added a step to have engineering or Operations staff to write the plan, if practical. • Revised to use text type procedural guidance instead of R&R type guidance, allowing the procedure steps to be handwritten on a provided attachment, or other typewritten/handwritten procedural guidance to be attached. • Provided writing guidelines for writing the procedure sections and steps. • Added INPO lessons learned and OE in an attachment. • Added guidance on performing Oram-Sentinel evaluation if systems or components are made unavailable. • Added "Normal plant operations" to the list of things that the work should have no affect on. • Reference PIP 00-1508 corrective actions.
Rev 005	06/12/00 No Technical Changes made. Converted to correct template.

Operations Troubleshooting/Altering System Alignment

1. Purpose

To establish controls and boundaries for the purpose of performing troubleshooting or supporting maintenance activities on components/systems under Operations Group control. To provide a method for altering system alignments when direction is **NOT** provided by any specific procedure. This does **NOT** apply to generic valve stroking, which is covered under another procedure.

2. Limits And Precautions

2.1 The Superintendent of Operations (or designee) should concur with any Alignment Action Plan that results in making any system or component incapable of performing its intended function or inoperable per Technical Specifications.

2.2 Use extreme caution during troubleshooting activities or altering system alignments to minimize risk of inadvertent Reactor or Turbine trips, isolations, or equipment inoperability.

2.3 Changes in equipment or system setpoints or normal operating parameters are **NOT** permitted except temporary adjustments/transients which are necessary for troubleshooting activities or altering system alignments. Evaluate impact on operability prior to making any setpoint changes.

2.4 Do **NOT** exceed the design limits of operating parameters (temperature, pressure, etc.) for any system or component.

2.5 Procedure changes to normal Operating Procedures are **NOT** required to support the Alignment Action Plan. Any deviation from normal operation or alignment shall be considered and evaluated during development of the Alignment Action Plan.

2.6 Every effort should be made to **NOT** turnover a troubleshooting activity or altered system alignment to the on-coming shift. **IF** it is necessary to do this, a thorough turnover of the procedure in-progress is required. At a minimum, the supervisor in charge of the activity and the operator performing the steps shall be present with the on-coming supervisor. This may require "on-station" turnover.

2.7 **WHEN** manually operating any motor operated valve, minimize the torque applied to the handwheel.

2.8 Any motor operated safety-related valve shall be operated electrically to ensure reliable automatic operation after manual operation.

3. Procedure

_____ 3.1 No other procedures exist to perform this task.

_____ 3.2 **IF** necessary for troubleshooting activities, information needed to perform root cause has been obtained and activities associated with troubleshooting are understood by the investigative teams to prevent disturbing root cause.

_____ 3.3 **IF** practical, System Engineering or Operations staff should develop the Altered System Alignment Evaluation and the Alignment Action Plan.

_____ 3.4 **IF** performing troubleshooting, review the INPO "Important Considerations Prior to Troubleshooting (Lessons Learned)" in Attachment 6 (Lessons Learned and OE).

3.5 Perform the following on Attachment 1 (Altered System Alignment Evaluation):

☐ 3.5.1 Record the following:

- Date
- Unit
- System
- Purpose of activity

NOTE:	All work shall be performed in the lowest consequence condition and Oram-Sentinel risk profile as possible.

_____ 3.5.2 **IF** a system or component will be made unavailable by this activity, perform the following:

_____ 3.5.2.1 Have this activity evaluated by the site Oram-Sentinel expert.

_____ _____/_____
Person Contacted Date Time

_____ 3.5.2.2 **IF** the risk profile results are RED, the activity (or competing activities) must be scheduled for a different time.

_____ 3.5.2.3 **IF** the risk profile results are ORANGE, the activity (or competing activities) should be scheduled for a different time.

☐ 3.5.2.4 Document the Oram-Sentinel results, including the dates and times the evaluation is good for.

_____ 3.5.2.5 **IF** the activity will occur outside the evaluated time frame, it must be reevaluated for the new time period.

☐ 3.5.3 Determine and record Consequence level:

Low Consequence: Activity should **NOT** adversely affect the operation or safety of the plant. The Oram-Sentinel risk profile is Green. The work performed shall have no affect on any of the following:

- Nuclear Safety
- RN or KC system
- Tech Specs/SLCs
- Release of radioactive materials
- Off-site power
- Reactivity management
- NC System inventory
- Normal plant operations

Medium Consequence: Activity could have an affect on normal plant operation or system availability but should **NOT** present a risk causing an unexpected plant transient or reportable event. Oram-Sentinel evaluation indicates a Yellow or Orange level of risk. Approval required by Superintendent of Operations (or designee).

High Consequence: High Consequence activities shall only be performed with an approved Operating Procedure because these activities are **NOT** considered troubleshooting or maintenance related. Activity could result in at least one of the following:

- RN or KC unable to perform design function
- Plant or Turbine Trip
- Release of radioactive material
- Loss of Off-Site Power
- Reportable Event
- Reactivity Event

☐ 3.5.4 Review applicable Operating Procedures, flow/electrical diagrams, Equipment Database, FSAR, DBD, TAC, etc. thoroughly. List references in space provided.

☐ 3.5.5 Consult with Procedure Group, Engineering, Chemistry, QA, or others as necessary. List individuals consulted in space provided.

3.6 Complete Attachment 2 (Alignment Action Plan), or attach similar documentation, as follows:

☐ 3.6.1 Include the following sections:

- Purpose
- Limits and Precautions
- Required Unit Status
- Prerequisite System Conditions
- Procedure

☐ 3.6.2 Write the procedure steps using guidance of Attachment 5 (Procedure Writing Principles).

NOTE: Either an appropriate procedure or Temp Mod shall install any temporary test equipment used. This procedure shall only be used to document the installation sequence.

☐ 3.6.3 Include any expected impact on the following:

- Plant alarms
- Control Board indications
- Computer points affected
- Tech Specs/SLCs affected
- Interlocks affected
- Auto control stations affected
- Increased surveillances required
- The potential need for placing Information Stickers to flag components operated by the plan {PIP 00-1508}

_____ 3.6.4 **IF** completing a troubleshooting plan, evaluate the INPO "Important Considerations Prior to Troubleshooting (Lessons Learned)" in Attachment 6 (Lessons Learned and OE) when writing the plan.

☐ 3.7 Perform Attachment 3 (Applicability Determination).

_____ 3.7.1 **IF** required by Attachment 3, perform Attachment 4 (10CFR50.59 Screening).

3.8 Complete the review and approval process on Attachment 1 (Altered System Alignment Evaluation) as follows:

☐ 3.8.1 Alignment Action Plan Preparer signs "Prepared By" line.

☐ 3.8.2 A Qualified Reviewer who is independent of the preparation of the Action Plan, shall review the Alignment Action Plan and 10CFR50.59 Screening (**IF** required) and sign "Reviewed By".

☐ 3.8.3 **IF** the Qualified Reviewer is **NOT** an SRO, have an additional review performed by an SRO.

_____ 3.8.4 **IF** any of the following is required, have Engineering, QA or other Subject Matter Expert review the Removal/Restoration Action Plan and sign "Reviewed By".

- Affects system/component interlocks
- Lifting leads
- Placing jumpers

☐ 3.8.5 OSM sign "Approved By".

☐ 3.9 Perform Pre-Job Briefing per OMP 3-2 (Shift, Pre and Post Job Briefings). Include the following:

- Some of the lessons learned and OE from Attachment 6 (Lessons Learned and OE).
- The importance of **NOT** altering root cause evidence, if applicable.
- Anticipated results of the altered system alignment.
- Any deviation from the Alignment Action Plan must first be approved using the same sequence as described above. Emergency actions to reverse the effects of the Alignment Action Plan can be performed as necessary to ensure plant and personnel safety.

_____ 3.10 Notify Control Room SRO of implementation of Alignment Action Plan.

_____ 3.11 Implement the Alignment Action Plan.

_____ 3.12 **WHEN** the Action Plan is completed, OSM shall review the completed Alignment Action Plan and current System/Component configuration for the following:

☐ 3.12.1 System/Component is in a configuration consistent with an approved Operating Procedure.

_____ 3.12.2 Any retest requirements have been satisfied.

☐ 3.12.3 Approval of Alignment Action Plan completion:

_____ _____/_____
OSM Date Time

_____ 3.13 **IF** practical, place copy of Attachment 2 (Alignment Action Plan) in Ops Toolkit for possible future use. (Located on McGuire Operations Home Page under "Ops Toolkit / Procedure Group").

☐ 3.14 Place routing Stamp in remarks section of cover sheet, check (✓) "Other" and fill in "Operations Support Manager (MG01OP)". {PIP 01-2611}

4. Enclosures

None

Attachment 1
Altered System Alignment Evaluation

Date: _____	Unit: ❑ One ❑ Two	System: _____
Purpose of activity: _____		
Oram Sentinel Evaluation: ❑ not required (still available)	❑ Green ❑ Yellow ❑ Orange	Evaluated start time/date: _____/_____ stop time/date: _____/_____ (if outside this window, reevaluate Oram-Sentinel)
Consequence: ❑ Low	❑ Medium (_____) Operations Superintendent (or designee) Approval	
References: _____		
Consultants (name/group/title): _____		
Prepared by/Date: _____	Reviewed by/Date: _____ Eng/SME (if required)	
Reviewed by/Date: _____ QR	Additional Review (Required if QR is **NOT** an SRO) by/Date: _____ SRO	
Approved by/Date: _____ OSM		

End of Attachment

Attachment 2
Alignment Action Plan

Page 1 of ____

Purpose: _____

Limits and Precautions:

Required Unit Status:

_____ SRO

Prerequisite System Conditions:

_____ SRO

Procedure

Attachment 2
Alignment Action Plan

Page ____ of ____

Procedure (continued)

End of Attachment

Attachment 3
Applicability Determination

PART I – ACTIVITY DESCRIPTION

DUKE POWER SITE			UNIT(S)		
☒ McGuire	☐ Catawba	☐ Oconee	☐ Unit 1	☐ Unit 2	☐ Unit 3

DOCUMENT NUMBER _____ Rev# _____ Chg# _____

TITLE (OR ACTIVITY) _____

PART II – PROCESS REVIEW

For each activity, address all of the questions below. If the answer is "YES" for ANY portion of the activity, apply the identified process(es) to that portion of the activity. Note: It is not unusual to have more than one process apply to a given activity.

Will implementation of the above activity require a change to the:

1.	Technical Specifications (TS) or Operating License?	☐ NO	☐ YES	If YES, process as a license amendment per NSD 221.
2.	Quality Assurance Topical?	☐ NO	☐ YES	If YES, refer changes to the GO Nuclear Performance Assessment Group in NAID.
3.	Security Plans?	☐ NO	☐ YES	If YES, process per the Nuclear Security Manual.
4.	Emergency Plan?	☐ NO	☐ YES	If YES, process per the Emergency Planning Functional Area Manual.
5.	Inservice Testing Program Plan?	☐ NO	☐ YES	If YES, process per site IST Program for ASME code compliance and related facility changes.
6.	Inservice Inspection Program Plan?	☐ NO	☐ YES	If YES, process per QA Tech Services Inservice Inspection FAM for ASME code compliance and related facility or procedure changes.
7.	Fire Protection Program Plan?	☐ NO	☐ YES	If YES, refer to site FP Engineer for program changes.
8.	ISFSI Safety Analysis Report?	☐ NO	☐ YES	If YES, refer to NSD 211.
9.	Regulatory Commitments?	☐ NO	☐ YES	If YES, process per NSD 214.
10.	Code of Federal Regulations?	☐ NO	☐ YES	If YES, revise activity or seek assistance from Regulatory Compliance.
11.	Programs and manuals listed in the Administrative Section of the TS that require review under a TS change process other than 10CFR50.59?	☐ NO	☐ YES	If YES, process per the applicable TS change process.

PART III – 10CFR50.59 APPLICABILITY

For each activity, address all of the questions below. If the answer to question 16 is "Yes", then 10CFR50.59 does not apply. If the answer to question 16 is "NO", then process the activity per NSD 209 – 10CFR50.59 applies.

12.	Does the activity involve a procedure, governed by NSD 703, that has been excluded from the 10 CFR 50.59 process per NSD 703, Appendix N and the exclusion status remains valid?	☐ NO	☐ YES
13.	Does the activity involve (a) maintenance activities that restore SSCs to their as-designed condition (including activities that implement approved design changes) or (b) temporary alterations supporting maintenance that will be in effect during at-power operations for 90 days or less?	☐ NO	☐ YES
14.	Does the activity involve minor editorial UFSAR modifications that do **NOT** change the meaning or substance of information presented?	☐ NO	☐ YES
15.	Does the activity involve NRC and/or Duke Power approved changes to the licensing basis?	☐ NO	☐ YES
16.	Are **ALL** aspects of the activity bounded by one or more "YES" answers to questions 1 through 15, above?	☐ NO	☐ YES

PART IV – SIGNOFF

(Print Name) _____ (Sign) _____ DATE _____

Applicability Determination Preparer

End of Attachment

Attachment 4
10CFR50.59 Screening

10CFR50.59 SCREEN					
DUKE POWER SITE			UNIT(S)		
☒ McGuire	☐ Catawba	☐ Oconee	☐ Unit 1	☐ Unit 2	☐ Unit 3

DOCUMENT NUMBER _____ Rev# _____ Chg# _____

TITLE (OR ACTIVITY) _____

CONCLUSIONS

Check all that apply:

- ☐ The activity requires a change to the Technical Specifications.
- ☐ The activity requires a UFSAR change.
- ☐ The activity requires a 10CFR50.59 Evaluation.
- ☐ A 10CFR50.59 Evaluation is NOT required.

SIGNOFFS

(Print Name) _____ (Sign) _____ DATE _____

SCREEN PREPARER

(Print Name) _____ (Sign) _____ DATE _____

SCREEN REVIEWER

SCOPE DESCRIPTION

Provide a brief description of what is being changed and why:

TECHNICAL SPECIFICATIONS REVIEW

Does the proposed activity require a modification, deletion, or addition to the Technical Specifications? ☐ YES ☐ NO

If "YES", then identify Technical Specification sections that require change.

10CFR50.59 SCREEN QUESTIONS

For each question, check the correct response and provide appropriate justification. If Questions 1, 2, 3 or 4 is "YES," then a 10CFR50.59 Evaluation shall be performed. For guidance, refer to the Duke 10CFR50.59 Resource Manual.

1. Does the proposed activity involve a modification, addition to, or removal of a SSC such that the design function of the SSC, as described in the UFSAR, is adversely affected? ☐ YES ☐ NO
   JUSTIFICATION:

2. Does the proposed activity involve a change to a procedure that adversely affects how UFSAR described SSC design functions are performed or controlled? ☐ YES ☐ NO
   JUSTIFICATION:

10CFR50.59 SCREEN		
3. Does the proposed activity involve revising or replacing an evaluation methodology described in the UFSAR that is used in establishing the design basis or used in the safety analyses? JUSTIFICATION:	☐ YES	☐ NO
4. Does the proposed activity involve a test or experiment not described in the UFSAR, where an SSC is utilized or controlled in a manner that is outside the reference bounds of the design for that SSC as described in the UFSAR or is inconsistent with analyses or descriptions in the UFSAR? JUSTIFICATION:	☐ YES	☐ NO

REFERENCES

List applicable references. Include sufficient identifying detail to facilitate independent review and retrieval.

End of Attachment

Attachment 5
Procedure Writing Principles

Purpose

- State the purpose of the activity as clear and concise as practical.

Limits and Precautions

- Include limits and precautions that pertain to normal system operations, from the OP, if they are especially important to the success of the procedure.

- Include any limits and precautions that specifically arise from the altered system alignment being performed, such as overpressure concerns when isolating normal flowpaths {PIP 00-1508}, loss of automatic control during the evolution, or other concerns.

Required Unit Status

- State station or unit status necessary to perform activity.
- Include a signoff blank.

Prerequisite System Conditions

- Specify system conditions necessary to perform activity.
- Include a signoff blank.

Procedure

- Number each step. **IF** using a high level step with substeps, number and indent as follows:

  1. High level step

     1.1 Substep

        1.1.1 Substep

- **IF** the substep sequence can be performed in any order, use bullets instead of numbers.

- Write steps with one action per step (however, unlock and open, close and lock or similar type steps are acceptable).

- Write steps with action verb first, then component number, then component nomenclature (for example: Close 1NI-178B (Train 1B ND to C&D CL)).

Attachment 5
Procedure Writing Principles

- Use "Ensure" to mean taking necessary/appropriate actions to guarantee the component, reading, etc, is as specified (may require manipulation of components).
- Use "Check" to mean to observe/determine the present status (no manipulations).
- Do **NOT** use "Verify" due to potential confusion on its meaning.

- Include placekeeping for each step to the left of the step number.

  - Use a signoff blank when manipulating a component, otherwise, use a checkoff box.
  - Include DV requirements of OMPs 8-2, 8-3 and 8-4.

- For conditional steps, begin with **IF** or **WHEN** in all caps, bolded (if procedure is typed) and underlined. Provide sign of blank for conditional type steps.

- Use notes and cautions as applicable.
  - Use a caution to prevent actions that could result in damage to equipment, loss of plant stability, or injure personnel.
  - Do **NOT** include actions in notes or cautions.
  - Place notes and cautions immediately before the steps or substep they apply to
  - **NOTE** and **CAUTION** are in all caps and bolded (if procedure is typed).
  - Place the note or caution in a box (if procedure is typed).

End of Attachment

Attachment 6
Lessons Learned and OE

INPO "Important Considerations Prior to Troubleshooting (Lessons Learned)" from INPO Just-In-Time Operating Experience:

- What specific actions are permitted to be performed by troubleshooting personnel? Is the work specificity commensurate with the risks, consequences, and job complexity?
- What decision points, stop points, hold points, and boundary definitions does the troubleshooting plan contain to constrain undesired actions by workers?
- **IF** a team has been assembled to perform the troubleshooting, how have we verified that the roles, team leader, and/or points of contact are clearly identified for communication and decision making while troubleshooting? How have we planned to keep control room personnel aware of our activities?
- What documents describe or control the planned troubleshooting activities?
- What are the critical steps (actions) in the troubleshooting plan? What are the possible undesirable consequences on the plant from the planned troubleshooting activities? What contingency actions have we put in place to prepare for unexpected consequences of our troubleshooting activities?
- What industry or plant operating experience can we use in our troubleshooting?
- What level of review and approval is required for our troubleshooting plan?
- Who has the authority to authorize changes from the troubleshooting plan as described in the controlling documents and discussed during prejob briefings?
- What termination criteria and time constraints have we established to stop troubleshooting activities? **IF** troubleshooting activities proceed through shift turnovers, how will the evolution be controlled and new individuals informed of the troubleshooting activities?
- What controls have we implemented to verify that systems and components are returned to the desired configuration after troubleshooting? How have clarified the need to quarantine or save failed components?

Attachment 6
Lessons Learned and OE

OE source: INPO: Just-In-Time Operating Experience "Troubleshooting, Planning, and Control", Rev.2 May 2000

- Plant: Salem Unit 1

  Personnel Error During Troubleshooting Results in an Automatic Scram -- Reference: OE9830, OE9723

  On February 28, 1999, with the unit at 60 percent power, operators were troubleshooting a lube oil leak on one train of the main turbine lube oil coolers. An automatic scram occurred when operators improperly adjusted a six-way isolation valve for the main turbine lube oil cooler. The valve was inadvertently unseated, diverting lube oil flow from the operating cooler. The ensuing rapid loss of lube oil pressure tripped the main turbine and resulted in an automatic reactor scram.

  Important Point:

  The operation of the six-way valve was not understood by operators trying to more firmly seat the valve. Actions by the operators moved the valve off its closed seat.

  Contributor:

  Operating procedures insufficiently described the operation of the six-way valve.

- Plant: Nine Mile Point Unit 2

  Inadvertent Diesel Generator Start During Troubleshooting -- Reference: LER 410-99015

  On August 11, 1999, with the unit at 100 percent power, an inadvertent start of the division I diesel generator occurred while troubleshooting. A high priority work order was revised to troubleshoot a diesel generator speed control problem. Although the troubleshooting plan disabled the primary start circuit, a secondary start circuit was inadvertently energized during troubleshooting, starting the diesel generator.

  Important Points:

  The work order did **NOT** receive an independent technical review as required by station procedures. A technical support engineer and an instrument and controls technician worked together to plan and review the work order rather than separately performing these functions.

Attachment 6
Lessons Learned and OE

The troubleshooting plan was **NOT** reviewed in sufficient detail with the shift supervisor for proper understanding and approval.

Contributor:

The work control procedure had only general guidance for high priority work orders that were **NOT** interpreted and implemented in the diesel generator troubleshooting as intended in the procedure.

- Plant: Calvert Cliffs Unit 2

  Maintenance-Related Partial Loss of Off-Site Power -- Reference: LER 318-96001, OE7872

  On February 27, 1996, with the unit at 100 percent power, switchyard troubleshooting resulted in a partial loss of off-site power and an automatic reactor scram. Electricians closed a switchyard breaker that had the control system links open, which prevented opening the breaker after it was closed. The breaker protection system sensed a stuck breaker condition and opened several adjacent breakers. Power to all four reactor coolant pumps was lost, placing the plant in a natural circulation condition.

  Important Points:

  The agreed upon troubleshooting plan was **NOT** followed. An off-site distribution system representative, **NOT** present at the initial troubleshooting briefing, recommended a change to the plan. The change did **NOT** account for switchyard breaker interlocks and protective features that were in effect.

  The change to the plan was **NOT** adequately reviewed.

- Plant: Shearon Harris Unit 1

  Unauthorized Troubleshooting After Reactor Trip Breakers Open During Logic Testing -- Reference: LER 400-95016

  On December 28, 1995, with the unit in hot standby, the reactor trip breakers unexpectedly opened during logic testing of the solid state protection system. Technicians twice repeated portions of the test procedure to troubleshoot the cause of the reactor trip breakers opening, each time generating a new reactor trip signal.

Attachment 6
Lessons Learned and OE

Important Point:

Portions of the test procedure were repeated several times for troubleshooting without the knowledge or authorization of the operations shift supervisor.

Contributor:

The test is normally performed at power when reactor trip signals would **NOT** be generated.

End of Attachment

End of Procedure

..2.2.10 | 10/29/2001

Byron 1 | Exam Level S

Mark Question | Print Recor | New Searc | Exit

Question

Unit 2 is in Mode 3. A new system engineer has requested that the 2A SI pump be started with the discharge valve throttled to 75% open to determine starting current. The evolution is NOT described in current procedures, nor the Safety Analysis Report. The Shift Manager may . . .

Answer:

Not approve the test until a written safety evaluation has been performed and approved.

Distracter 1

Approve the evolution without restrictions.

Distracter 2

Not approve the test under any conditions.

Distracter 3

Only approve the test if another SRO with an engineering degree agrees.

Distracter Analysis:

Answer:

Distracter 1:

Distracter 2:

Distracter 3:

1 Pt(s) Unit 1 has just entered Mode 5 in preparation for refueling. Given the following conditions and events:

- A lower containment entry is planned for the next shift.
- The SRO directs the RO to purge the containment in preparation for the containment entry.
- Currently the VP system is secured with all fans off and containment purge and exhaust valves closed

Which one of the following describes the proper alignment of the containment purge system and basis for this alignment?

A. **The *NORMAL-REFUEL SELECTOR* switch is placed in the "*NORM*" position and ratio of supply air is 2/1 (Upper/Lower Containment).**
To prevent over pressurization of upper containment and no unmonitored release path.

B. **The *NORMAL-REFUEL SELECTOR* switch is placed in the "*NORM*" position and ratio of supply air is 2/1 (Upper/Lower Containment).**
To prevent opening of the ice condenser doors and ensure air flow is routed through clean up filters.

C. **The *NORMAL-REFUEL SELECTOR* switch is placed in the "*REFUEL*" position and ratio of supply air is 4/1 (Upper/Lower Containment).**
To prevent over pressurization of upper containment and no unmonitored release path.

D. **The *NORMAL-REFUEL SELECTOR* switch is placed in the "*REFUEL*" position and ratio of supply air is 4/1 (Upper/Lower Containment).**
To prevent opening of the ice condenser doors and ensure air flow is routed through clean up filters.

Bank Question: 1186 ***Answer: A***

1 Pt(s) Unit 1 has just entered Mode 5 in preparation for refueling. Given the following conditions and events:

- A lower containment entry is planned for the next shift.
- The SRO directs the RO to purge the containment in preparation for the containment entry.
- Currently the VP system is secured with all fans off and containment purge and exhaust valves closed

Which one of the following describes the proper alignment of the containment purge system and basis for this alignment?

A. **The *NORMAL-REFUEL SELECTOR* switch is placed in the "*NORM*" position and ratio of supply air is 2/1 (Upper/Lower Containment).**
To prevent over pressurization of upper containment and no unmonitored release path.

B. **The *NORMAL-REFUEL SELECTOR* switch is placed in the "*NORM*" position and ratio of supply air is 2/1 (Upper/Lower Containment).**
To prevent opening of the ice condenser doors and ensure air flow is routed through clean up filters.

C. **The *NORMAL-REFUEL SELECTOR* switch is placed in the "*REFUEL*" position and ratio of supply air is 4/1 (Upper/Lower Containment).**
To prevent over pressurization of upper containment and no unmonitored release path.

D. **The *NORMAL-REFUEL SELECTOR* switch is placed in the "*REFUEL*" position and ratio of supply air is 4/1 (Upper/Lower Containment).**
To prevent opening of the ice condenser doors and ensure air flow is routed through clean up filters.

Distracter Analysis:

A. **Correct**: - this is the proper position for this operation.
B. **Incorrect**: A ratio of 2/1 is less likely to prevent opening doors than a ratio of 4/1
Plausible: -
C. **Incorrect** : - this will over-pressurize the upper containment
D. **Incorrect**: - this will over-pressurize the upper containment.
Plausible: .

Level: SRO Only

KA: G2.3.9 (2.5/3.4)

Lesson Plan Objective: CNT-VP Obj. 2 & 6

Source: BANK McGuire NRC 2002 Retake Exam

Level of knowledge: ~~Comprehension~~ memory

References:
1. OP-MC-CNT-VP pages 21, 23

2.3 Radiation Control

2.3.1 **Knowledge of 10 CFR: 20 and related facility radiation control requirements.**
(CFR: 41.12 / 43.4. 45.9 / 45.10)
IMPORTANCE RO 2.6 SRO 3.0

2.3.2 **Knowledge of facility ALARA program.**
(CFR: 41.12 / 43.4 / 45.9 / 45.10)
IMPORTANCE RO 2.5 SRO 2.9

2.3.3 **Knowledge of SRO responsibilities for auxiliary systems that are outside the control room (e.g., waste disposal and handling systems).**
(CFR: 43.4 / 45.10)
IMPORTANCE RO 1.8 SRO 2.9

2.3.4 **Knowledge of radiation exposure limits and contamination control, including permissible levels in excess of those authorized.**
(CFR: 43.4 / 45.10)
IMPORTANCE RO 2.5 SRO 3.1

2.3.5 **Knowledge of use and function of personnel monitoring equipment.**
(CFR: 41.11 / 45.9)
IMPORTANCE RO 2.3 SRO 2.5

2.3.6 **Knowledge of the requirements for reviewing and approving release permits.**
(CFR: 43.4 / 45.10)
IMPORTANCE RO 2.1 SRO 3.1

2.3.7 **Knowledge of the process for preparing a radiation work permit.**
(CFR: 41.10 / 45.12)
IMPORTANCE RO 2.0 SRO 3.3

2.3.8 **Knowledge of the process for performing a planned gaseous radioactive release.**
(CFR: 43.4 / 45.10)
IMPORTANCE RO 2.3 SRO 3.2

2.3.9 **Knowledge of the process for performing a containment purge.**
(CFR: 43.4 / 45.10)
IMPORTANCE RO 2.5 SRO 3.4

CLASSROOM TIME (Hours)

NLO	NLOR	LPRO	LPSO	LOR
1.5	1.5	1.5	1.5	1.0

OBJECTIVES

	OBJECTIVE	NLO	NLOR	LPRO	LPSO	LOR
1	State the purpose of the Containment Purge System. CNTVP001	X	X	X	X	
2	Describe the air flow path during a normal and refueling purging operation and explain the importance of supply and exhaust air flow balance during a purging operation. CNTVP002	X	X	X	X	
3	Explain what occurs automatically on a Phase "A" (S_l) or Containment Ventilation (S_h) isolation signal if a purging operation is in progress. CNTVP003	X	X	X	X	X
4	Describe the controls and indications, on Local Panel RB-CP-1, associated with the Containment Purge System. CNTVP004	X	X	X	X	
5	Describe the controls and indications, in the Control Room, associated with the Containment Purge System. CNTVP005		X	X	X	X
6	Given a Limit and/or Precaution associated with an operating procedure, discuss it's basis and applicability. CNTVP006		X	X	X	X

Dampers in the supply and exhaust ducts are provided with limit switches to indicate their status (Open or Closed) in the Control Room. These indicators are provided to indicate blockage of air flow or as redundant indication of fan motor failure.

As soon as the motor starter is energized auxiliary contacts energize interposing relays which activate the Electro/Pneumatic solenoids controlling the Containment Isolation Valve for Train A and Train B. The pneumatic operated isolation valves open, thus purging the Reactor Building. Each isolation valve is supplied with a limit switch package which will energize an indicator lamp in the Control Room to provide the operator with valve status indication. (i.e., Upper Containment Purge Isolation Valves Open - Lights lit, valves Closed - Lights extinguished).

Objective #6

3.1.1. Limits and Precautions of OP/1/A/6450/015 (VP System)

Do not purge lower Containment in modes 1-4. (Tech Specs require lower Containment purge valves to be closed in these modes.)

WHEN all Reactor Missile Shields are installed, the "Normal-Refuel Selector Switch" shall be in "NORM" to prevent over pressurizing upper Containment.

In Modes 5 and 6, EMF-39(L) shall be operable during VP releases. (Required by SLC 16.11.7.)

VP System may be operated in No Mode with 1EMF-39 inoperable. (SLC allowance).

Do not purge the Incore Instrument Room if Containment Integrity is required. (The exhaust package in unqualified.)

Airlock doors must be secured during VP System Startup. (To prevent accidental door movement.)

Maximum VP exhaust rate shall be below the release rate of the VP Gaseous Waste Release Document {PIP 0-M97-2033}. (This is to ensure Tech Spec flowrate limits through the exhaust filter package are not exceeded.)

3.1.2. Operating procedures

The Containment Purge System is normally de-energized. It is used to purge Containment and the Incore Instrument Room when testing and maintenance are to be performed on equipment inside these areas. Manual actuation is provided from the HVAC Controls in the Main Control Room. Should the system be active at the time of a LOCA or detection of radiation leakage, the units are automatically de-energized and the associated isolation valves are closed upon receipt of a Containment Ventilation Signal (S_h).

To start the Purge Supply and Exhaust Fans select 100% capacity (normal operation) or 50% capacity on Purge and Supply Mode Switch. If for some reason it is necessary to operate the purge system at 50% capacity select Train "A" or Train "B" position.

Objective #2 & 4

Place the Purge Mode Selector Switch, on local panel RB-CP-1, to the desired position "NORMAL" or "REFUEL". In the NORMAL position dampers RBPS-D-8 and 9 in the supply air lines position to provide a flow split of 2/1 ratio of supply air (Upper verses Lower Containment). Upper and lower supply flows are indicated on RB-CP-1. In the REFUEL position these dampers position to provide a flow split of 4/1. To operate the system in the Refuel mode, the missile shield must be removed (procedure requirement).

Operation of the supply and exhaust fans should be such that the total air flow rate entering the containment equals that exhausting containment to avoid placing the Containment vessel under a positive or negative pressure. Air flow rates into and out of containment are controlled by throttling a set of pneumatic dampers, one on the discharge and one on the recirculation line, for the supply (RBPS-D-5 and 6) and exhaust (RBPE-D-4 and 5). As one of the dampers throttles closed the other will open to maintain the desired flow rate.

For the supply air VPMPS-5 on RB-CP-1 controls dampers RBPS-D-5 and 6 in the supply duct system. When this control is rotated in the clockwise position the discharge damper, RBPS-D-6 closes. As D-6 closes, supply air flow rate to the Containment decreases and D-5 opens to maintain flowrate for the operating supply fan(s). An air monitor mounted in the supply duct to the Containment furnishes air flow rate (cfm) read-out on RB-CP-1 indicating the rate (cfm) air is being supplied to the Containment.

For the exhaust air VPMPS-6 on RB-CP-1 control dampers RBPE-D-4 and 5 in the exhaust duct system. When this control is rotated in the clockwise position the discharge damper, RBPE-D-4 closes. As D-4 closes, exhaust air flow rate from the Containment decreases and D-5 opens to maintain flowrate for the operating exhaust fan(s). An air monitor mounted in the exhaust duct from the Containment furnishes air flow rate (cfm) read-out on RB-CP-1 indicating the rate (cfm) air is being exhausted from the Containment.

At times during refueling with no core alterations or movement of irradiated fuel, when the equipment hatch is opened, the containment is kept at a slightly negative pressure to ensure no unfiltered release paths from containment exist.

To startup the Incore Instrument Purge System open the isolation valves on control board and depress the "START" pushbutton and monitor the flow meters to insure proper operation of the fans.

To operate the Auxiliary Carbon Filters depress the fans "ON" pushbutton and monitor the filter DP until Containment activity is reduced to acceptable levels.

Duke Power Company McGuire Nuclear Station **Containment Purge System** **Continuous Use**	Procedure No. **OP/ 1/A/6450/015** Revision No. **030** Electronic Reference No. **MC00475D**

PERFORMANCE

* * * * * * * * * * UNCONTROLLED FOR PRINT * * * * * * * * * *

(ISSUED) - PDF Format

Revision History (significant issues, limited to one page)

Rev 030 1/15/04

- Modified L&P 2.2 to provide overall guidance on positioning the "Normal - Refuel Selector Switch" that allows it to be in "Refueling" for activities such as containment cleanup when some missile shields may be installed - but must be in "Normal" when pressure communication is lost due to ALL Missile Shields being installed.
- Enc. 4.2, added note prior to Step 3.12 to provide guidance on choosing alignment.
- Enc. 4.2 - 4.7, added steps to notify CCC of alignment changes to VP, so CCC can better track the status of Containment Closure.
- Enc. 4.2 - 4.7, added new Limit and Precaution "VP System may be operated in No Mode with 1EMF-39 inoperable." This reminds operators of SLC allowance for running VP when 1EMF-39 is inoperable.

Rev 029 (2/01//03):

- Changed all references of "Shift Work Manager" to WCC SRO.
- Enhanced Enc. 4.2 steps for removing Ice Condenser Lower Inlet Door blocks.
- Reversed step order in Enc. 4.2 for steps 3.6 and 3.7 due to locations.
- Major revision to sequence of steps in Enclosure 4.3 for shutting down VP.
- Format and editorial changes throughout to agree with Procedure Writer's Manual.
- Clarified method/labels/locations for operating YH Pumps for Enc. 4.2, 4.3, 4.4, 4.5.
- Added locations for control panels and containment isolation valves.
- Clarified and updated some explanations and notes.
- Added Model WO # for installing/removing Lower Ice Condenser Inlet Door blocks.
- Added step to Enc. 4.3 to ensure Inlet Door blocks removed prior to Mode 4
- Added step to Enc. 4.3 to place Normal-Refuel Selector Switch in "Norm".
- Enhanced Enc. 4.1 Containment Aux Carbon Filter System Operation.
- Deleted Limit & Precaution related to purging IIR from VP enclosures.
- Upgraded red tag steps per new safety tagging program (ST2).

Rev 028 (9/24/02):

- Added initial condition to Enclosure 4.2 to obtain 2 Keys #178 for VP startup).

Rev 027 (4-30-01):

- Added section to Enclosure 4.7 to swap mode from "Refueling" to "Normal".
- Enclosure 4.3, added step for reminder when shutting down VP with Airlock Doors closed and that VQ paperwork should be in place.

Unit 1

Containment Purge System

1. Purpose

This procedure provides instruction for operation of VP System.

2. Limits and Precautions

2.1 Purging Containment in Modes 1 – 4 is prohibited.

2.2 **WHEN** all Reactor Missile Shields are installed, the "Normal - Refuel Selector Switch" shall be in "NORM" to prevent over pressurizing upper Containment.

2.3 **IF** Containment Integrity required, purging of Incore Instrument Room is prohibited. (Exhaust filter package is unqualified)

2.4 Airlock doors shall be secured during VP System startup to prevent accidental door movement.

2.5 Maximum VP exhaust rate shall be below release rate of GWR. {PIP M-97-2033}

2.6 In Modes 5 and 6, 1EMF-39(L) shall be operable during VP releases.

2.7 VP System may be operated in No Mode with 1EMF-39 inoperable.

3. Procedure

3.1 See Section 4.

4. Enclosures

4.1 Containment Aux Carbon Filter System Operation

4.2 VP System Startup

4.3 VP System Shutdown

4.4 Incore Instrumentation Room Purge System Startup

4.5 Incore Instrumentation Room Purge System Shutdown

4.6 Temporary Shutdown of VP

4.7 VP Alignment

End of Body

Unit 1

1. Limits and Precautions

None

2. Initial Conditions

None

3. Procedure

☐ 3.1 Evaluate all outstanding R&Rs that may impact performance of this procedure.

3.2 Perform the following sections, as applicable:

☐ Section 3.3, Starting Containment Aux Carbon Filter Fans
☐ Section 3.4, Stopping Containment Aux Carbon Filter Fans

3.3 Starting Containment Aux Carbon Filter Fans

3.3.1 Press "START" on desired train(s):

_____ • 1A Cont Aux Carbon Filter Fan
_____ • 1B Cont Aux Carbon Filter Fan

☐ 3.3.2 Check Containment Aux Carbon Filter DP meters for positive indication.

3.4 Stopping Containment Aux Carbon Filter Fans

3.4.1 Press "STOP" on desired train(s):

_____ • 1A Cont Aux Carbon Filter Fan
_____ • 1B Cont Aux Carbon Filter Fan

End of Enclosure

Unit 1

1. Limits and Precautions

1.1 Purging Containment in Modes 1 – 4 is prohibited.

1.2 **WHEN** all Reactor Missile Shields are installed, the "Normal - Refuel Selector Switch" shall be in "NORM" to prevent over pressurizing upper Containment.

1.3 Airlock doors shall be secured during VP System startup to prevent accidental door movement.

1.4 Maximum VP exhaust rate shall be below release rate of GWR. {PIP M-97-2033}

1.5 In Modes 5 and 6, 1EMF-39(L) shall be operable during VP releases.

1.6 VP System may be operated in No Mode with 1EMF-39 inoperable.

2. Initial Conditions

_____ 2.1 **IF** YH required due to outside air temperature, YH available per OP/0/B/6400/011 C (Auxiliary, Reactor #1 & Reactor #2 Buildings Heating Water System).

_____ 2.2 Unit 1 in Mode 5, 6 or No Mode.

_____ 2.3 Upper and Lower Containment Airlock doors secured.

_____ 2.4 Two keys #178 obtained from key locker.

3. Procedure

☐ 3.1 Evaluate all outstanding R&Rs that may impact performance of this procedure.

_____ 3.2 Notify RP to initiate GWR paperwork. (This will take approximately 2 hours.)

_____ _____/_____
Person Contacted Date Time

_____ 3.3 **WHEN** GWR paperwork has been issued, ensure release information portions complete on GWR.

_____ 3.4 Notify RP that 1EMF-39L Trip 1 and Trip 2 setpoints have been set per GWR.

_____ _____/_____
Person Contacted Date Time

_____ 3.5 Notify Containment Closure Coordinator of Unit 1 VP System startup.
CCC

Unit 1

NOTE:
- Ice Condenser Inlet Doors may open upon a loss of "pressure communication" between upper and lower Containment. Communication typically is established by the removal of shield blocks or NC pump hatches.
- Lower Inlet Door alarms under these conditions do **NOT** constitute automatic actuation of ECCS for notification of NRC. {PIP M-97-2686}

_____ 3.6 **IF** desired, install Lower Ice Condenser Inlet Door blocks, model WO #86053824.
WCC SRO

NOTE: Step 3.7 enables VP lower containment isolation valves to open on a fan start.

3.7 Using key #178, place to "OPEN": (Control Room HVAC Panel)

_____ • 1A VP Lower Cont Purge Isol

_____ • 1B VP Lower Cont Purge Isol

3.8 Perform the following to place VP supply and exhaust fans in recirculation on panel 1RB-CP-1: (AB, 767', NN-54)

_____ _____ 3.8.1 Rotate 1VPMPS-5 (1RBPS-D-5 & 1RBPS-D-6 Normal Operation) clockwise to "CLOSED".
DV

_____ _____ 3.8.2 Rotate 1VPMPS-6 (1RBPE-D-4 & 1RBPE-D-5 Normal Operation) clockwise to "CLOSED".
DV

NOTE: "Normal" mode provides a supply flow ratio of 2/1 to upper vs. lower containment and "Refueling" mode provides a ratio of 4/1, by adjusting dampers 1RBPS-D-8 and D-9.

3.9 Place 1VPMSS-1 (Normal -Refuel Selector Switch) to either:

_____ • "NORM"

OR

_____ • "REFU"

_____ 3.10 **IF** initial startup of VP, remove tags and close desired fan breakers:

- ☐ 1MXJ-4E (1A Containment Purge Exhaust Fan Motor)
- ☐ 1MXJ-5F (1A Containment Purge Supply AHU Motor)
- ☐ 1MXK-F3C (1B Containment Purge Exhaust Fan Motor)
- ☐ 1MXK-F1D (1B Containment Purge Supply AHU Motor)

3.11 Remove the following switch labels: (Control Room HVAC Panel):

- ☐ 1A VP Exhaust Fan
- ☐ 1B VP Exhaust Fan
- ☐ 1A VP Supply Fan
- ☐ 1B VP Supply Fan

NOTE: During an outage, it is preferable to run both trains of VP.

_____ 3.12 **IF** 50% capacity desired, place "Unit 1 VP Sup & Exh Fan Train Select" to either:

_____ • 1A

OR

_____ • 1B

NOTE: Step 3.13 will start one or both trains of VP fans.

3.13 Place "Unit 1VP Sup & Exh Fan Mode Select" to desired capacity:

_____ • 50%

OR

_____ • 100%

3.14 Check "Unit 1 VP Cont Insd Isol" dark:

- ☐ Upper Clsd
- ☐ Lower Clsd

3.15 Check "Unit 1 VP Cont Otsd Isol" dark:

- ☐ Upper Clsd
- ☐ Lower Clsd

3.16 Check selected train lit:

- ☐ VP Exh Fan Otlt Dmpr Open
- ☐ VP Sup Fan Otlt Dmpr Open

_____ 3.17 Notify RP Shift of VP fans start time.

_____ _____/_____
Person Contacted Date Time

Unit 1

_____ 3.18 **IF** YH Secondary Pumps required due to outside temperature, perform the following:

3.18.1 Ensure in "AUTO" on 1RB-ECP-1 Control Panel: (AB, 767', PP-54)

_____ • RB1-P-1 (A Reactor Bldg Heating Water Secondary Pump)
_____ • RB1-P-1A (B Reactor Bldg Heating Water Secondary Pump)
_____ • RB1-P-2 (C Reactor Bldg Heating Water Secondary Pump)
_____ • RB1-P-2A (D Reactor Bldg Heating Water Secondary Pump)

_____ 3.18.1.1 **IF** VP Train A running, perform the following:

☐ Check "ON" lit for either RB1-P-1 or RB1-P-1A
☐ Check at least 10 psig DP across operating YH Pump
☐ Check 1VPT-1 (RBPS-1A Temperature Heating Coil Discharge) temperature indication (black needle) within 10°F of temperature controller (red needle) on 1RB-CP-1

_____ 3.18.1.2 **IF** VP Train B running, perform the following:

☐ Check "ON" lit for either RB1-P-2 or RB1-P-2A
☐ Check at least 10 psig DP across operating YH Pump
☐ Check 1VPT-2 (RBPS-1B Temperature Heating Coil Discharge) temperature indication (black needle) within 10°F of temperature controller (red needle) on 1RB-CP-1

_____ 3.19 **WHEN** ready to initiate purge airflow, perform the following:

_____ 3.19.1 **IF** purging containment with equipment hatch and both airlock doors open, notify RP to aid in establishing airflow rates by checking airflow at equipment hatch and airlock doors.

_____ _____/_____
Person Contacted Date Time

☐ 3.19.2 Check 1RBPS-AFMD-1 (Total Supply Airflow) and 1RBPE-AFMD-1 (Total Exhaust Airflow) equal to prevent placing containment vessel under positive or negative pressure.

_____ 3.19.3 **IF** "Normal" mode selected, check 1RBPS-AFMD-2 (Upper Containment Supply Airflow) twice as much as 1RBPS-AFMD-3 (Lower Containment Supply Airflow.)

_____ 3.19.4 **IF** "Refueling" mode selected, check 1RBPS-AFMD-2 (Upper Containment Supply Airflow) four times as much as 1RBPS-AFMD-3 (Lower Containment Supply Airflow.)

3.20 Adjust the following to desired flow rate of GWR paperwork:

_____ DV _____ • 1VPMPS-5 (1RBPS-D-5 & 1RBPS-D-6 Normal Operation)

_____ DV _____ • 1VPMPS-6 (1RBPE-D-4 & 1RBPE-D-5 Normal Operation)

☐ 3.21 Record required information on GWR paperwork.

_____ 3.22 Calculate release volume using a blank "OPS VP GWR Calcs" Excel form. (DAE, search for "GWR".)

_____ 3.23 **IF** purge flow rate is changed, record information on GWR paperwork.

_____ WCC SRO 3.24 **IF** Lower Ice Condenser Inlet Door blocks installed in Step 3.6 **AND** removal is desired, perform the following:

_____ WCC SRO 3.24.1 **WHEN** containment pressure conditions allow, remove Lower Ice Condenser Inlet Door blocks, Model WO #86053824.

End of Enclosure

1. Limits and Precautions

1.1 **WHEN** all Reactor Missile Shields are installed, the "Normal - Refuel Selector Switch" shall be in "NORM" to prevent over pressurizing upper Containment.

1.2 Maximum VP exhaust rate shall be below release rate of GWR. {PIP M-97-2033}

1.3 In Modes 5 and 6, 1EMF-39(L) shall be operable during VP releases.

1.4 VP System may be operated in No Mode with 1EMF-39 inoperable.

2. Initial Conditions

None

3. Procedure

☐ 3.1 Evaluate all outstanding R&Rs that may impact performance of this procedure.

_____ 3.2 **IF** securing VP with airlock doors closed **OR** will be closed, perform the following:

_____ WCC SRO 3.2.1 Evaluate effect on containment pressure due to continuous air input from outage related activities including use of VS and portable air compressors.

_____ WCC SRO 3.2.2 Ensure VQ GWR paperwork prepared for anticipated VQ releases.

_____ CCC 3.3 Notify Containment Closure Coordinator of Unit 1 VP System shutdown.

_____ 3.4 **IF** Reactor Building YH required due to outside temperature, check in "AUTO" on 1RB-ECP-1 Control Panel: (AB, 767', PP-54)

- ☐ RB1-P-1 (A Reactor Bldg Heating Water Secondary Pump)
- ☐ RB1-P-1A (B Reactor Bldg Heating Water Secondary Pump)
- ☐ RB1-P-2 (C Reactor Bldg Heating Water Secondary Pump)
- ☐ RB1-P-2A (D Reactor Bldg Heating Water Secondary Pump)

_____ 3.5 Place "Unit 1 VP Sup & Exh Fan Mode Select" to "OFF". (Control Rm HVAC Panel.)

3.6 Check dark:

- ☐ VP to Upper Cont Supply #1 Open
- ☐ VP to Upper Cont Supply #2 Open
- ☐ VP from Upper Cont Exh #1 Open
- ☐ VP from Upper Cont Exh #2 Open
- ☐ VP from Lower Cont Exh Open
- ☐ VP to Lower Cont Supply #1 Open
- ☐ VP to Lower Cont Supply #2 Open

3.7 Check "Unit 1 VP Cont Otsd Isol" lit:

☐ Upper Clsd
☐ Lower Clsd

3.8 Check "Unit 1 VP Cont Insd Isol" lit:

☐ Upper Clsd
☐ Lower Clsd

_____ 3.9 Place 1VPMSS-1 (Normal-Refuel Selector Switch) to "NORM" on local control panel 1RB-CP-1. (AB, 767', NN-54)

☐ 3.10 Complete GWR paperwork.

_____ 3.11 Notify RP to evaluate 1EMF-38, 39, and 40 setpoints due to VP release being secured.

_____ _____/_____
Person Contacted Date Time

_____ 3.12 **IF** VP being shutdown following an outage, complete the following prior to Mode 4:

_____ 3.12.1 Prepare tags per Preplan PP-00400.

3.12.2 Tag open:

☐ 1MXJ-4E (1A Containment Purge Exhaust Fan Motor)
☐ 1MXJ-5F (1A Containment Purge Supply AHU Motor)
☐ 1MXK-F3C (1B Containment Purge Exhaust Fan Motor)
☐ 1MXK-F1D (1B Containment Purge Supply AHU Motor)

3.12.3 Place switch labels: (Control Room HVAC panel)

☐ 1A VP Exhaust Fan
☐ 1B VP Exhaust Fan
☐ 1A VP Supply Fan
☐ 1B VP Supply Fan

3.13 Using key #178, place to "CLOSED": (Control Room HVAC Panel)

_____ • 1A VP Lower Cont Purge Isol

_____ • 1B VP Lower Cont Purge Isol

_____ 3.14 Ensure Lower Ice Condenser Inlet Door blocks removed, model WO #86053824.
WCC SRO

Unit 1

_____ 3.15 Notify Operations Test Group to complete PT/1/A/4200/001 N (VP Valve Leak Rate Test) on associated valve penetrations.

_____ _____/_____
Person Contacted Date Time

End of Enclosure

1. Limits and Precautions

1.1 **WHEN** all Reactor Missile Shields are installed, the "Normal - Refuel Selector Switch" shall be in "NORM" to prevent over pressurizing upper Containment.

1.2 **IF** Containment Integrity required, purging of Incore Instrument Room is prohibited. (Exhaust filter package is unqualified)

1.3 Maximum VP exhaust rate shall be below release rate of GWR. {PIP M-97-2033}

1.4 In Modes 5 and 6, 1EMF-39(L) shall be operable during VP releases.

1.5 VP System may be operated in No Mode with 1EMF-39 inoperable.

2. Initial Conditions

_____ 2.1 OSM approval required to start Incore Instrument Room Purge System.
OSM

_____ 2.2 **IF** YH required due to outside air temperature, YH available per OP/0/B/6400/011 C (Auxiliary, Reactor #1 & Reactor #2 Buildings Heating Water System).

_____ 2.3 Unit in Mode 5, 6, or No Mode with Containment Integrity **NOT** required.

_____ 2.4 Two keys #178 obtained from key locker.

3. Procedure

☐ 3.1 Evaluate all outstanding R&Rs that may impact performance of this procedure.

_____ 3.2 Notify RP to initiate GWR paperwork for purging Incore Instrument Room. (This will take approximately 2 hours.)

_____ _____/_____
Person Contacted Date Time

_____ 3.3 **WHEN** GWR paperwork has been issued, ensure release information portions complete on GWR.

_____ 3.4 Notify RP that 1EMF-39L Trip 1 and Trip 2 setpoints have been set per GWR.

_____ _____/_____
Person Contacted Date Time

_____ 3.5 Notify Containment Closure Coordinator of Unit 1 Incore Instrument Room System startup.
CCC

Unit 1

☐ 3.6 Remove tag and close 1MXJ-1B (Unit 1 Incore Inst Room Purge Exhaust Filter Unit Fan Motor). (unqualified filter)

☐ 3.7 Remove switch label from "Unit 1 Incore Room Purge Exhaust Fan".

3.8 Open air supply to the following:

_____ • 1VP-17A (Incore Inst Rm Purge Supply Inside Isol) (RX1, 750+11', 102° crane wall)

_____ • 1VP-19A (Incore Inst Rm Purge Exhaust Inside Isol) (RX1, 750+11', 76° crane wall)

_____ • 1VP-18B (Incore Inst Rm Purge Supply Outside Isol) (AN1, 750+11', 100°)

_____ • 1VP-20B (Incore Inst Rm Purge Exhaust Outside Isol) (AN1, 750+11', 75°)

NOTE: Step 3.9 enables VP lower containment isolation valves to open on a fan start.

3.9 Using key #178, place to "OPEN": (Control Room HVAC Panel)

_____ • 1A VP Lower Cont Purge Isol

_____ • 1B VP Lower Cont Purge Isol

_____ 3.10 Press "START" on "Unit 1 Incore Inst Rm Purge Sup & Exh Fans".

3.11 Check dark the following closed indications:

☐ 1VP-17 & 19 Incore Inst Rm Purge Insd Isol
☐ 1VP-18 & 20 Incore Inst Rm Purge Otsd Isol

☐ 3.12 Monitor 1IIPS-AFMD-1 (Supply Airflow) and 1IIPE-AFMD-1 (Exhaust Airflow) on local panel 1RB-CP-1 to ensure proper operation of fans.

☐ 3.13 Record required information on GWR paperwork.

Unit 1

_____ 3.14 **IF** YH Secondary Pumps required due to outside temperature, perform the following:

3.14.1 Check in "AUTO" on 1RB-ECP-1 Control Panel: (AB, 767', PP-54)

☐ RB1-P-3 (E Reactor Bldg Heating Water Secondary Pump)
☐ RB1-P-3A (F Reactor Bldg Heating Water Secondary Pump)

☐ 3.14.1.1 Check "ON" lit for either RB1-P-3 or RB1-P-3A.

☐ 3.14.1.2 Check at least 10 psig DP across operating YH Pump.

☐ 3.14.2 Check 1VPT-3 (1HPS-1A Temperature Heating Coil Discharge) temperature indication (black needle) within 10°F of temperature controller (red needle) on local panel 1RB-CP-1.

End of Enclosure

1. Limits and Precautions

1.1 **WHEN** all Reactor Missile Shields are installed, the "Normal - Refuel Selector Switch" shall be in "NORM" to prevent over pressurizing upper Containment.

1.2 **IF** Containment Integrity required, purging of Incore Instrument Room is prohibited. (Exhaust filter package is unqualified)

1.3 Maximum VP exhaust rate shall be below release rate of GWR. {PIP M-97-2033}

1.4 In Modes 5 and 6, 1EMF-39(L) shall be operable during VP releases.

1.5 VP System may be operated in No Mode with 1EMF-39 inoperable.

2. Initial Conditions

None

3. Procedure

☐ 3.1 Evaluate all outstanding R&Rs that may impact performance of this procedure.

_____ CCC 3.2 Notify Containment Closure Coordinator of Unit 1 Incore Instrument Room System shutdown.

_____ 3.3 **IF** YH Secondary Pumps required due to outside temperature, check the following in "AUTO" on 1RB-ECP-1 Control Panel: (AB, 767', PP-54)

☐ RB1-P-3 (E Reactor Bldg Heating Water Secondary Pump)
☐ RB1-P-3A (F Reactor Bldg Heating Water Secondary Pump)

_____ 3.4 Press "STOP" on "Unit 1 Incore Inst Rm Purge Sup & Exh Fans". (Control Room HVAC Panel)

3.5 Check lit the following closed indications:

☐ 1VP-17 & 19 Incore Inst Rm Purge Insd Isol
☐ 1VP-18 & 20 Incore Inst Rm Purge Otsd Isol

3.6 Isolate air supply to the following:

_____ • 1VP-17A (Incore Inst Rm Purge Supply Inside Isol) (RX1, 750+11', 102° crane wall)

_____ • 1VP-19A (Incore Inst Rm Purge Exhaust Inside Isol) (RX1, 750+11', 76 crane wall)

_____ • 1VP-18B (Incore Inst Rm Purge Supply Outside Isol) (AN1, 750+11', 100°)

_____ • 1VP-20B (Incore Inst Rm Purge Exhaust Outside Isol) (AN1, 750+11', 75°)

3.7 Using key #178, place to "CLOSED": (Control Room HVAC Panel)

_____ • 1A VP Lower Cont Purge Isol

_____ • 1B VP Lower Cont Purge Isol

_____ 3.8 Prepare tag per Pre-plan PP-00401.

☐ 3.9 Tag open 1MXJ-1B (Unit 1 Incore Inst Room Purge Exhaust Filter Unit Fan Motor). (unqualified filter)

☐ 3.10 Place switch label on "Unit 1 Incore Room Purge Exhaust Fan".

☐ 3.11 Complete GWR paperwork.

_____ 3.12 Notify RP to evaluate 1EMF-38, 1EMF-39, and 1EMF-40 setpoints due to VP release being secured. {PIP M-97-1925}

_____ _____/_____
Person Contacted Date Time

_____ 3.13 Notify Ops Test Group to complete PT/1/A/4200/001 N (VP Valve Leak Rate Test) on associated valve penetrations.

_____ _____/_____
Person Contacted Date Time

End of Enclosure

Unit 1

1. Limits and Precautions

1.1 **WHEN** all Reactor Missile Shields are installed, the "Normal - Refuel Selector Switch" shall be in "NORM" to prevent over pressurizing upper Containment.

1.2 Maximum VP exhaust rate shall be below release rate of GWR. {PIP M-97-2033}

1.3 In Modes 5 and 6, 1EMF-39(L) shall be operable during VP releases.

1.4 VP System may be operated in No Mode with 1EMF-39 inoperable.

2. Initial Conditions

_____ 2.1 VP in operation.

3. Procedure

☐ 3.1 Evaluate all outstanding R&Rs that may impact performance of this procedure.

_____ 3.2 Notify RP of temporary shutdown of Unit 1 VP, and to evaluate the need for new GWR paperwork.

_____ _____/_____
Person Contacted Date Time

_____ 3.3 **IF** RP requests new GWR, shutdown VP per Enclosure 4.3 (VP System Shutdown).

_____ 3.4 Notify Containment Closure Coordinator that Unit 1 VP will be temporarily shutdown.
CCC

☐ 3.5 Record "as found" position of "Unit 1 VP Sup & Exh Fan Mode Select": _____

_____ 3.6 Place "Unit 1 VP Sup & Exh Fan Mode Select" to "OFF".

3.7 Check "OFF" lit:

- ☐ 1A VP Exhaust Fan
- ☐ 1B VP Exhaust Fan
- ☐ 1A VP Supply Fan
- ☐ 1B VP Supply Fan

☐ 3.8 Record time VP shutdown on GWR paperwork.

Unit 1

_____ 3.9 **WHEN** VP to be restarted, perform the following:

_____ 3.9.1 Ensure existing GWR paperwork will allow restart of purge.

_____ 3.9.2 Notify RP that Unit 1 VP will be restarted.

_____ _____/_____
Person Contacted Date Time

_____ 3.9.3 Notify Containment Closure Coordinator that Unit 1 VP will be restarted.
CCC

_____ 3.9.4 Return "Unit 1 VP Sup & Exh Fan Mode Select" to position recorded in Step 3.5.

3.9.5 Check "ON" lit for selected train:

☐ VP Supply Fan
☐ VP Exhaust Fan

_____ 3.9.6 **IF** necessary, adjust the following to desired flow rate of GWR paperwork:

_____ _____ • 1VPMPS-5 (1RBPS-D-5 & 1RBPS-D-6 Normal Operation)
DV

_____ _____ • 1VPMPS-6 (1RBPE-D-4 & 1RBPE-D-5 Normal Operation)
DV

☐ 3.9.7 Record VP start time on GWR paperwork.

End of Enclosure

1. Limits and Precautions

1.1 **WHEN** all Reactor Missile Shields are installed, the "Normal - Refuel Selector Switch" shall be in "NORM" to prevent over pressurizing upper Containment.

1.2 Maximum VP exhaust rate shall be below release rate of GWR. {PIP M-97-2033}

1.3 In Modes 5 and 6, 1EMF-39(L) shall be operable during VP releases.

1.4 VP System may be operated in No Mode with 1EMF-39 inoperable.

2. Initial Conditions

None

3. Procedure

☐ 3.1 Evaluate all outstanding R&Rs that may impact performance of this procedure.

_____ 3.2 Notify Containment Closure Coordinator of Unit 1 VP alignment change.
CCC

_____ 3.3 **IF** Airlock Doors are open, notify RP at hatch watch of VP alignment change.

_____ _____/_____
Person Contacted Date Time

_____ 3.4 **IF** Airlock Doors secured, notify Shift RP of VP alignment change.

_____ _____/_____
Person Contacted Date Time

3.5 Perform the following sections, as applicable:

☐ Section 3.6, Shifting VP from 50% to 100%
☐ Section 3.7, Shifting VP from 100% to 50%
☐ Section 3.8, Shifting VP from one train to opposite train
☐ Section 3.9, Shifting VP from "Normal" to "Refueling" Mode
☐ Section 3.10, Shifting VP from "Refueling" to "Normal" Mode

3.6 Shifting VP from 50% to 100%

_____ 3.6.1 Place "Unit 1 VP Sup & Exh Fan Mode Select" to "100%".

☐ 3.6.2 Check "ON" lit for started VP Supply Fan.

☐ 3.6.3 Check "ON" lit for started VP Exhaust Fan.

3.6.4 Check "Unit 1 VP Cont Otsd Isol" dark:

- ☐ Upper Clsd
- ☐ Lower Clsd

3.6.5 Check "Unit 1 VP Cont Insd Isol" dark:

- ☐ Upper Clsd
- ☐ Lower Clsd

3.6.6 Check lit:

- ☐ VP Exh Fan 1A Otlt Dmpr Open
- ☐ VP Exh Fan 1B Otlt Dmpr Open
- ☐ VP Sup Fan 1B Otlt Dmpr Open
- ☐ VP Sup Fan 1A Otlt Dmpr Open

_____ 3.6.7 Notify RP contacted in Step 3.3 or 3.4, VP manipulations are complete.

_____ _____/_____
Person Contacted Date Time

3.7 Shifting VP from 100% to 50%

3.7.1 Place "Unit 1 VP Sup & Exh Fan Train Select" to either:

_____ • 1A

OR

_____ • 1B

_____ 3.7.2 Place "Unit 1 VP Sup & Exh Fan Mode Select" to "50%".

_____ 3.7.3 **IF** 1A selected in Step 3.7.1, check the following lit:

- ☐ 1A VP Supply Fan "ON"
- ☐ 1A VP Exhaust Fan "ON"
- ☐ 1B VP Supply Fan "OFF"
- ☐ 1B VP Exhaust Fan "OFF"
- ☐ 1A VP Exh Fan Otlt Dmpr Open
- ☐ 1A VP Sup Fan Otlt Dmpr Open

_____ 3.7.4 **IF** 1B selected in Step 3.7.1, check the following lit:

- ☐ 1B VP Supply Fan "ON"
- ☐ 1B VP Exhaust Fan "ON"
- ☐ 1A VP Supply Fan "OFF"
- ☐ 1A VP Exhaust Fan "OFF"
- ☐ 1B VP Exh Fan Otlt Dmpr Open
- ☐ 1B VP Sup Fan Otlt Dmpr Open

3.7.5 Check "Unit 1 VP Cont Insd Isol" dark:

- ☐ Upper Clsd
- ☐ Lower Clsd

3.7.6 Check "Unit 1 VP Cont Otsd Isol" dark:

- ☐ Upper Clsd
- ☐ Lower Clsd

_____ 3.7.7 Notify RP contacted in Step 3.3 or 3.4, VP manipulations are complete.

_____ _____/_____
Person Contacted Date Time

3.8 Shifting VP from one train to opposite train

☐ 3.8.1 Check "Unit 1 VP Sup & Exh Fan Mode Select" in "50%".

3.8.2 Place "Unit 1 VP Sup & Exh Fan Train Select" to opposite train:

_____ • 1A

OR

_____ • 1B

_____ 3.8.3 **IF** 1A selected in Step 3.8.2, check the following lit:

- ☐ 1A VP Supply Fan "ON"
- ☐ 1A VP Exhaust Fan "ON"
- ☐ 1B VP Supply Fan "OFF"
- ☐ 1B VP Exhaust Fan "OFF"
- ☐ 1A VP Exh Fan Otlt Dmpr Open
- ☐ 1A VP Sup Fan Otlt Dmpr Open

_____ 3.8.4 **IF** 1B selected in Step 3.8.2, check the following lit:

- ☐ 1B VP Supply Fan "ON"
- ☐ 1B VP Exhaust Fan "ON"
- ☐ 1A VP Supply Fan "OFF"
- ☐ 1A VP Exhaust Fan "OFF"
- ☐ 1B VP Exh Fan Otlt Dmpr Open
- ☐ 1B VP Sup Fan Otlt Dmpr Open

3.8.5 Check "Unit 1 VP Cont Otsd Isol" dark:

- ☐ Upper Clsd
- ☐ Lower Clsd

3.8.6 Check "Unit 1 VP Cont Insd Isol" dark:

- ☐ Upper Clsd
- ☐ Lower Clsd

_____ 3.8.7 Notify RP contacted in Step 3.3 or 3.4, VP manipulations are complete.

_____ _____/_____
Person Contacted Date Time

3.9 Shifting VP from "Normal" to "Refueling" Mode

_____ 3.9.1 Place 1VPMSS-1 (Normal-Refuel Selector Switch) to "REFU" on local control panel 1RB-CP-1. (AB, 767', NN-54)

_____ 3.9.2 **IF** necessary, adjust the following to desired flow rate of GWR paperwork:

_____ _____ DV • 1VPMPS-5 (1RBPS-D-5 & 1RBPS-D-6 Normal Operation)

_____ _____ DV • 1VPMPS-6 (1RBPE-D-4 & 1RBPE-D-5 Normal Operation)

☐ 3.9.3 Record required information on GWR paperwork.

_____ 3.9.4 Notify RP contacted in Step 3.3 or 3.4, VP manipulations are complete.

_____ _____/_____
Person Contacted Date Time

3.10 Shifting VP from "Refueling" to "Normal" Mode

_____ 3.10.1 Place 1VPMSS-1 (Normal-Refuel Selector Switch) to "NORM" on local control panel 1RB-CP-1. (AB, 767', NN-54)

_____ 3.10.2 **IF** necessary, adjust the following to desired flow rate of GWR paperwork:

_____ _____ • 1VPMPS-5 (1RBPS-D-5 & 1RBPS-D-6 Normal Operation)
DV

_____ _____ • 1VPMPS-6 (1RBPE-D-4 & 1RBPE-D-5 Normal Operation)
DV

☐ 3.10.3 Record required information on GWR paperwork.

_____ 3.10.4 Notify RP contacted in Step 3.3 or 3.4, VP manipulations are complete.

_____ _____/_____
Person Contacted Date Time

End of Enclosure

Bank Question: 432.2 ***Answer: A***

1 Pt(s) Unit 1 has just entered Mode 5 in preparation for refueling. Given the following conditions and events:

- A lower containment entry is planned for the next shift.
- The SRO directs the RO to purge the containment in preparation for the containment entry.
- Currently the VP system is secured with all fans off and containment purge and exhaust valves closed

Which one of the following describes the proper alignment of the containment purge system?

A. **The *NORMAL-REFUEL SELECTOR* switch is placed in the "*NORM*" position and ratio of supply air is 2/1 (Upper/Lower Containment).**

B. **The *NORMAL-REFUEL SELECTOR* switch is placed in the "*NORM*" position and ratio of supply air is 4/1 (Upper/Lower Containment).**

C. **The *NORMAL-REFUEL SELECTOR* switch is placed in the "*REFUEL*" position and ratio of supply air is 2/1 (Upper/Lower Containment).**

D. **The *NORMAL-REFUEL SELECTOR* switch is placed in the "*REFUEL*" position and ratio of supply air is 4/1 (Upper/Lower Containment).**

Distracter Analysis:

A. **Correct**: - this is the proper position for this operation.
B. **Incorrect**: Air ratio is 2/1 not 4/1
Plausible: -
C. **Incorrect** : - this will over-pressurize the upper containment
D. **Incorrect:** - this will over-pressurize the upper containment.
Plausible: .

Level: RO&SRO

KA: G2.3.9 (2.5/3.4)

Lesson Plan Objective: CNT-VP Obj. 2

Source: BANK

Level of knowledge: comprehension

References:
1. OP-MC-CNT-VP pages 19, 21, 27

1 Pt(s) Given the following conditions on Unit 1:

- MODE 1
- Fuel shuffle is in progress
- 1EMF 17 Spent Fuel Bldg Refuel BRDG Trip 2 alarm
- 1EMF 42 Fuel Bldg Vent Hi Rad Trip 2 alarm

Which one of the following correctly describes the actions the SRO would ~~take for the above conditions~~? in accordance with plant procedures

A. Implement AP/1/A/5500/25 (Spent Fuel Damage)
Evacuate the spent fuel pool area
Ensure VF in filter mode

B. Implement AP/1/A/5500/25 (Spent Fuel Damage)
~~Ensure VF in filter mode~~ Evacuate non-essential personnel
Initiate makeup to the spent fuel pool

C. Implement AP/1/A/5500/41 (Loss Spent Fuel Pool Cooling or Level)
Evacuate the spent fuel pool area
Place KF purification loop in service

D. Implement AP/1/A/5500/41 (Loss Spent Fuel Pool Cooling or Level) Evacuate non essential personnel.
Place KF purification loop in service
~~Initiate makeup to the spent fuel pool~~

Bank Question: 1187 ***Answer: A***

1 Pt(s) Given the following conditions on Unit 1:

- MODE 1
- Fuel shuffle is in progress
- 1EMF 17 Spent Fuel Bldg Refuel BRDG Trip 2 alarm
- 1EMF 42 Fuel Bldg Vent Hi Rad Trip 2 alarm

Which one of the following correctly describes the actions the SRO would take for the above conditions?

A. **Implement AP/1/A/5500/25 (Spent Fuel Damage)**
Evacuate the spent fuel pool area
Ensure VF in filter mode

B. **Implement AP/1/A/5500/25 (Spent Fuel Damage)**
Ensure VF in filter mode
Initiate makeup to the spent fuel pool

C. **Implement AP/1/A/5500/41 (Loss Spent Fuel Pool Cooling or Level)**
Evacuate the spent fuel pool area
Place KF purification loop in service

D. **Implement AP/1/A/5500/41 (Loss Spent Fuel Pool Cooling or Level)**
Place KF purification loop in service
Initiate makeup to the spent fuel pool

Distracter Analysis: The question hinges on EMF-42 indication of fuel damage (release of activity). AP/41 strategies would be ineffective.

A. **Correct**:
B. **Incorrect**:doesn't address the control of gaseous activity
Plausible:. The correct AP, may believe high rad due to loss of water shielding.
C. **Incorrect**:. Wrong AP, doesn't address the control of gaseous activity
Plausible: Evacuation is a good idea, placing purification in service is a credible way to reduce activity in the pool water
D. **Incorrect**:. Wrong AP
Plausible: Placing purification in service is a credible way to reduce activity in the pool water, may believe high rad due to loss of water shielding.

Level: SRO ONLY 10CFR55.43b(4)

KA: 2.3.10 (2.9/3.3)

Lesson Plan Objective: OP-MC-AP-AP/25 obj 2

Source: NEW

Level of knowledge: Memory

References:
1. AP/25 page 4 & 5

2.3 Radiation Control (Continued)

2.3.10 **Ability to perform procedures to reduce excessive levels of radiation and guard against personnel exposure.**
(CFR: 43.4 / 45.10)
IMPORTANCE RO 2.9 SRO 3.3

2.3.11 **Ability to control radiation releases.**
(CFR: 45.9 / 45.10)
IMPORTANCE RO 2.7 SRO 3.2

CLASSROOM TIME (Hours)

NLO	NLOR	LPRO	LPSO	LOR
		1.0	1.0	1.0

OBJECTIVES

	OBJECTIVE	NLO	NLOR	LPRO	LPSO	LOR
1	Concerning AP/1(2)/5500/25 (Spent Fuel Damage): • State the purpose of the AP • Recognize the symptoms that would require implementation of the AP. AP25001			X	X	X
2	Given scenarios describing accident events and plant conditions, evaluate the basis for any caution, note, or step. AP25002			X	X	X

ACTION/EXPECTED RESPONSE	RESPONSE NOT OBTAINED
10. **IF AT ANY TIME pressurization of containment becomes a concern, THEN:**	
a. Evaluate isolating the following penetrations:	
__ • VS __ • VB.	
__ b. Evaluate VQ release.	
__ c. Evaluate placing VP in service.	
__ 11. **GO TO Step 17.**	
12. **Announce over paging system the following:**	
__ • Description of event.	
__ • All personnel evacuate the Unit 1 Spent Fuel Pool bldg and assemble in hot side of change room.	
13. **Isolate Spent Fuel Pool area as follows:**	
__ a. Notify RP.	
__ b. Ensure VF has been placed in filter mode by placing "UNIT 1 VF EXHAUST BYPASS DAMPER CONTROL" to the "CLOSE" position.	
__ c. Have another operator ensure all Unit 1 Spent Fuel Pool bldg doors are closed **PER** Enclosure 2 (Closure of Spent Fuel Building Doors).	
__ 14. **Check Refueling Cavity level - GREATER THAN 23 FEET.**	__ **GO TO Step 16.**

ACTION/EXPECTED RESPONSE	RESPONSE NOT OBTAINED

15. **WHEN dose rates allow, THEN isolate Spent Fuel Pool from Refueling Cavity as follows:**

__ a. Notify Fuel Handling Crew to move the fuel transfer cart to the Spent Fuel Pool Building.

b. Dispatch two operators to perform the following:

__ 1) **WHEN** fuel transfer cart is in the Spent Fuel Pool Building, **THEN** close 1KF-122 (Fuel Transfer Tube Block) (spent fuel bldg, 780, PP-51, top of fuel pool at south east corner).

__ 16. **Place KF purification loop in service PER OP/1/A/6200/005 (Spent Fuel Cooling System), Enclosure 4.2 (Spent Fuel Pool Purification Loop Operation).**

__ 17. **Place one Outside Air Pressure Filter train in service PER OP/0/A/6450/011 (Control Area Ventilation/Chilled Water System), Enclosure 4.4 (Control Room Atmosphere Pressurization During Abnormal Conditions).**

__ 18. **REFER TO RP/0/A/5700/000 (Classification of Emergency).**

END

1 Pt. Given the following plant conditions on Unit 2:

- A loss of all AC Power has occurred
- The actions of EP/2/A/5000/ECA 0.0 Loss of All AC Power are in progress
- SG PORVs are being controlled locally to reduce SG pressures to less than 200 psig.
- SG pressures ~~is~~ are currently 350 psig
- Reactor Coolant cold leg temperatures are 325 degrees
- Source range startup rate is +0.2 and steady
- The STA informs the SRO there is a Yellow path on subcriticality

Which one of the following describes the action that should taken to mitigate the above plant condition?

A. Begin an emergency boration

B. Stop depressurizing SGs.

C. Continue to lower SG pressure to <200 psig

D. Go to EP/2/A/5000/FR-S.2 (Response to Loss of Core Shutdown)

Bank Question: 1188 ***Answer: B***

1 Pt. Given the following plant conditions on Unit 2:

- A loss of all AC Power has occurred
- The actions of EP/2/A/5000/ECA 0.0 Loss of All AC Power are in progress
- SG PORVs are being controlled locally to reduce SG pressure to less than 200 psig.
- SG pressure is currently 350 psig
- Reactor Coolant cold leg temperatures are 325 degrees
- Source range startup rate is +0.2 and steady
- The STA informs the SRO there is a Yellow path on subcriticality

Which one of the following describes the action that should taken to mitigate the above plant condition?

A. Begin an emergency boration

B. Stop depressurizing SGs.

C. Continue to lower SG pressure to <200 psig

D. Go to EP/2/A/5000/FR-S.2 (Response to Loss of Core Shutdown)

Distracter Analysis:. If the SUR is above zero in ECA 0.0 the RNO requires dumping steam to heat up the RCS and establish subcriticality.

A. **Incorrect**:
Plausible: Emergency boration would be an action to mitigate the positive SUR, but can not be done without AC power.

B. **Correct**:

C. **Incorrect**:
Plausible: If SR is above zero the procedure requires local control of atmospheric dump valves to raise SG pressure

D. **Incorrect**
Plausible: While in ECA 0.0 CSFs are monitored for information only

LEVEL: SRO ONLY 10CFR55.43b(5)

KA: G2.4.16

SOURCE: BANK Farley 1 1998

LEVEL OF KNOWLEDGE: Analysis

AUTHOR: CWS

LESSON: OP-MC-EP-ECA

OBJECTIVES: OP-MC-EP-ECA obj 4

REFERENCES: OP-MC-EP-ECA, page 49

2.4 Emergency Procedures /Plan (Continued)

2.4.9 **Knowledge of low power / shutdown implications in accident (e.g. LOCA or loss of RHR) mitigation strategies.**
(CFR: 41.10 / 43.5 / 45.13)
IMPORTANCE RO 3.3 SRO 3.9

2.4.10 **Knowledge of annunciator response procedures.**
(CFR: 41.10 / 43.5 / 45.13)
IMPORTANCE RO 3.0 SRO 3.1

2.4.11 **Knowledge of abnormal condition procedures.**
(CFR: 41.10 / 43.5 / 45.13)
IMPORTANCE RO 3.4 SRO 3.6

2.4.12 **Knowledge of general operating crew responsibilities during emergency operations.**
(CFR: 41.10 / 45.12)
IMPORTANCE RO 3.4 SRO 3.9

2.4.13 **Knowledge of crew roles and responsibilities during EOP flowchart use.**
(CFR: 41.10 / 45.12)
IMPORTANCE RO 3.3 SRO 3.9

2.4.14 **Knowledge of general guidelines for EOP flowchart use.**
(CFR: 41.10 / 45.13)
IMPORTANCE RO 3.0 SRO 3.9

2.4.15 **Knowledge of communications procedures associated with EOP implementation.**
(CFR: 41.10 / 45.13)
IMPORTANCE RO 3.0 SRO 3.5

2.4.16 [redacted]er
[redacted]
(CFR: 41.10 / 43.5 / 45.13)
IMPORTANCE RO 3.0 SRO 4.0

2.4.17 **Knowledge of EOP terms and definitions.**
(CFR: 41.10 / 45.13)
IMPORTANCE RO 3.1 SRO 3.8

CLASSROOM TIME (Hours)

NLO	NLOR	LPRO	LPSO	LOR
		1.5	1.5	1.0

OBJECTIVES

SEQ	OBJECTIVE	NLO	NLOR	LPRO	LPSO	LOR
1	Explain the purpose for each procedure in the ECA-0 series. EPECA001			X	X	
2	Discuss the entry and exit guidance for each procedure in the ECA-0 series. EPECA002			X	X	
3	Discuss the mitigating strategy (major actions) of each procedure in the ECA-0 series. EPECA003			X	X	X
4	[redacted] EPECA004			X	X	X
5	Describe the immediate actions and include the RNO when appropriate. EPECA005			X	X	X
6	Given the appropriate procedure, evaluate a given scenario describing accident events and plant conditions to determine any required action and its basis. EPECA006			X	X	X
7	Discuss the time critical task(s) associated with the ECA-0 series procedures including the time requirements and the basis for these requirements. EPECA007			X	X	X

STEP 25 Depressurize intact S/Gs to 210 PSIG as follows:

PURPOSE: To depressurize the intact S/Gs.

To inform the operator of the importance of maintaining at least one intact S/G N/R level above the top of the U-tubes during depressurization.

BASIS: During the rapid depressurization performed in Step 25, S/G level could drop out of the N/R, resulting in a loss of adequate heat sink. If this situation occurs, the depressurization should be stopped and CA flow reestablished until S/G N/R level is raised to greater than 11% (32% ACC).

Step 25 depressurizes the intact S/Gs, thereby reducing NC temperature and pressure to reduce NC pump seal leakage and minimize NC inventory loss.

Once intact S/G pressure is reduced to 210 PSIG, the S/G PORVs and CA flow should be controlled to maintain S/G pressure at that level until AC power is restored.

STEP 26 Check reactor subcritical:

PURPOSE: To ensure the reactor does not return to a critical condition during S/G depressurization.

BASIS: Step 26 checks for a zero or negative startup rate on the intermediate and source range channels. If a positive startup rate is detected, the RNO action requires secondary depressurization be terminated and NC temperature be allowed to go up to shut down the reactor. This step addresses the core criticality concern associated with S/G depressurization and NC cooldown.

STEP 27 Check S/I signal status:

PURPOSE: To check if an S/I signal exists.

BASIS: The secondary depressurization initiated in Step 25 will result in S/I actuation, if not already actuated, on low Pzr pressure. The operator should check S/I actuation status and reset S/I as soon as the reset delay time has expired. This reset action is consistent with the philosophy of defeating automatic loading of the emergency bus upon AC power restoration. Resetting S/I will open the individual output relays from the solid state protection cabinets, thus permitting the operator to manually load S/I equipment as instructed in the recovery procedures.

Questions

Number of Questions Selected: 1

Close

Print/Preview Questions

QuestionId	948	Plant Name	FARLEY 1	CognitiveLevel	3
ExamType	ILO	NSSSType	PWR	ExamLevel	S
ExamDate	03/12/1998	NSSSVendor	WEC	Reference Material	
KANUMBER	2.4.16	KARevision		ParentQuestionID	

Double Click KA Number!

QuestionStem

Given the following plant conditions:

- A loss of all A C power has occurred on Unit 2.
-□□The actions required by FNP-2-ECP-0.0, LOSS OF ALL AC POWER, are in progress.
-□□SG atmospheric relief valves are being controlled locally to reduce SG pressure to less □than 200 psig,
-□□A low steam line pressure SI signal has been received.
-□□Steam line pressure is 350 psig and RCS cold leg temperatures are at 325°F.
-□□Source range startup rate is +0.2 dpm and steady.
- The STA reports there is a Yellow path on subcriticality

Which one of the following actions should be taken

QuestionCommen

If SUR is above zero the ECP-0.0 RNO requires securing dumping steam to heat up the RCS and establish subcriticality.

Answer	Stop dumping steam.
Distracter1	Begin an emergency boration.
Distracter1Commen	Emergency boration would be an action to mitigate the positive SUR, but cannot be done without AC power.
Distracter2	Continue to lower SG pressure to < 200 psig.
Distracter2Commen	If SUR is above zero the ECP-0.0 RNO requires local control of atmospheric relief valves to raise SG pressure.
Distracter3	Proceed immediately to FRP-S.2
Distracter3Commen	While in ECP-0.0, CSFs are monitored for information only.

1 Pt. Given the following conditions on Unit 1:

- Air in leakage to the condenser has resulted in steadily degrading condenser vacuum.
- A load reduction is directed in order to maintain vacuum.
- With the unit at approximately 85% power, a manual reactor trip is ordered due to the inability to maintain vacuum.
- All systems function as designed.

Which one of the following describes the notification requirements for this event?

A. **No notifications to any outside agencies are required for this event.**

B. **The NRC must be notified within 4 hours due to manual actuation of the Reactor Protection System.**

C. **The System Operating Center must be notified within 1 hour to ensure grid stability is maintained.**

D. **The State/Counties must be notified within 15 minutes of the trip due to reaching an Emergency Plan classification for an Unusual Event.**

Bank Question: 1189 ***Answer: B***

1 Pt. Given the following conditions on Unit 1:

- Air in leakage to the condenser has resulted in steadily degrading condenser vacuum.
- A load reduction is directed in order to maintain vacuum.
- With the unit at approximately 85% power, a manual reactor trip is ordered due to the inability to maintain vacuum.
- All systems function as designed.

Which one of the following describes the notification requirements for this event?

A. No notifications to any outside agencies are required for this event.

B. The NRC must be notified within 4 hours due to manual actuation of the Reactor Protection System.

C. The System Operating Center must be notified within 1 hour to ensure grid stability is maintained.

D. The State/Counties must be notified within 15 minutes of the trip due to reaching an Emergency Plan classification for an Unusual Event.

Distracter Analysis:.

A. **Incorrect**: NRC notification required
Plausible: The plant manually trips the reactor during normal shutdowns without the 4 hour notification requirement

B. **Correct**:

C. **Incorrect**: Grid stability issues may be an immediate concern, with the SOC responding without waiting for McGuire's input
Plausible: The SOC is typically notified as soon as possible during load changes/loss of unit

D. **Incorrect** Reactor trip/loss of vacuum scenarios do not meet Emergency Plan classification criteria.
Plausible: Some manual reactor trip scenarios (i.e., manual after automatic reactor trip fails) do require E-Plan classification

LEVEL: SRO ONLY 10CFR55.43b(5)

KA: G2.4.30 (2.2/3.6)

SOURCE: BANK Point Beach 1 2003 NRC Exam

LEVEL OF KNOWLEDGE: Memory

AUTHOR: CWS

LESSON: OP-MC-ADM-DIR,

OBJECTIVES: OP-MC- ADM-DIR, obj 10

REFERENCES: RP/0/A/5700/010 NRC Immediate Notification Requirements, Enclosure 4.1 page 5-
NSD 202, page 1

2.4 Emergency Procedures /Plan (Continued)

2.4.26 **Knowledge of facility protection requirements including fire brigade and portable fire fighting equipment usage.**
(CFR: 43.5 / 45.12)
IMPORTANCE RO 2.9 SRO 3.3

2.4.27 **Knowledge of fire in the plant procedure.**
(CFR: 41.10 / 43.5 / 45.13)
IMPORTANCE RO 3.0 SRO 3.5

2.4.28 **Knowledge of procedures relating to emergency response to sabotage.**
(CFR: 41.10 / 43.5 / 45.13)
IMPORTANCE RO 2.3 SRO 3.3

2.4.29 **Knowledge of the emergency plan.**
(CFR: 43.5 / 45.11)
IMPORTANCE RO 2.6 SRO 4.0

2.4.30 **Knowledge of which events related to system operations/status should be reported to outside agencies.**
(CFR: 43.5 / 45.11)
IMPORTANCE RO 2.2 SRO 3.6

2.4.31 **Knowledge of annunciators alarms and indications, and use of the response instructions.**
(CFR: 41.10 / 45.3)
IMPORTANCE RO 3.3 SRO 3.4

2.4.32 **Knowledge of operator response to loss of all annunciators.**
(CFR: 41.10 / 43.5 / 45.13)
IMPORTANCE RO 3.3 SRO 3.5

2.4.33 **Knowledge of the process used track inoperable alarms.**
(CFR: 41.10 / 43.5 / 45.13)
IMPORTANCE RO 2.4 SRO 2.8

2.4.34 **Knowledge of RO tasks performed outside the main control room during emergency operations including system geography and system implications.**
(CFR: 43.5 / 45.13)
IMPORTANCE RO 3.8 SRO 3.6

OBJECTIVES

	OBJECTIVE	NLO	NLOR	LPRO	LPSO	LOR
8	Concerning NSD 109, Confined Space Entry: • Discuss the Authorized Entrants (person entering confined space) responsibility. • Discuss the Authorized Attendants (Hatchwatch) responsibility. ADMDIR011	X	X	X	X	X
9	Concerning NSD 200 Overtime Control: • State the maximum hours a worker at McGuire can work without an approved "Request For Work Hours Extension" form. ADMDIR012	X	X	X	X	X
10	Concerning NSD 202 Reportability: • Given a description of a plant occurrence, determine reportability using NSD 202. ADMDIR013			X	X	X
11	Concerning NSD 203, Operability: • State who is responsible for operability determinations, taking any appropriate action(s) required by Tech Specs and ensuring all compensatory actions are assigned. • Define the term valid as it applies to chemistry sampling analysis exceeding Tech Spec limits and Reactor Coolant Leakage calculation exceeding Tech Spec limits. ADMDIR014			X	X	X
12	Concerning NSD 304 Reactivity Management: • State the purpose of this NSD. ADMDIR015			X	X	X

202. REPORTABILITY

202.1 INTRODUCTION

The NRC's regulations set forth in Title 10, Chapter I, Code of Federal Regulations requires the reporting of various events or conditions in connection with licensee activities. This directive is presented to ensure nuclear station compliance and consistency with the reporting regulations of the 10CFR.

202.2 PURPOSE

The purpose of the directive is to provide guidance for use in determining reportability of station events or conditions under the provisions of the Immediate Notification Requirements of Significant Events (10CFR 50.72), the Licensee Event Reporting System (10CFR 50.73), 10CFR Part 21, Reporting of Defects and Noncompliance, 10CFR 50.9, Completeness and Accuracy of Information, to ensure proper and consistent reporting. Security event notifications are addressed in the Duke Nuclear Security Manual, a limited number of 10CFR 20 radiological notification requirements and 10CFR 72, ISFSI, notification requirements are included in the NSD. For Part 50.72 reporting, this directive only addresses [50.72(b)] one/four/eight hour notifications for non-emergency events, since adequate guidance currently exists in each stations' Emergency Plan's implementing response procedures for emergency events [50.72(a)] and their classifications.

202.3 REFERENCES

1. 10 Code of Federal Regulations 50.72, 50.73, Part 20, 72 and 50.9
2. Federal Register; Vol. 48, No. 144 and 168; July 26, 1983/August 29, 1983; "Licensee Report System" and "Immediate Notification Requirements of Significant Events"; final rule
3. NUREG 1397, Feb. '91, "An Assessment of Design Control Practices and Design Reconstitution Practices in the Nuclear Industry"
4. Generic Letter 91-18, "Operable/Operability: Ensuring the Functional Capability of a System or Component"
5. Standard Review Plan (NUREG 800)
6. Federal Register (56 FR 36081); July 31, 1991; "10 Code of Federal Regulations Parts 21 and 50.55(e)"
7. NUREG 1022, Revision 2.NSD 201 (Reporting Requirements)
8. NSD 201 (Reporting Requirements)
9. NUREG-0302, Rev. 1
10. "Regulatory Position on the Reportability Requirements for a Single Train System", dated June 28, 2002
11. Federal Register; Vol 68, No. 108; June 5, 2003; 10 CFR Parts 72 and 73, "Events Notification Requirements"; final rule

Deleted: 21,

4.1.3	Events Requiring FOUR HOUR REPORTS: REPORTABLE EVENTS Corresponding 10CFR Section in Brackets [ ]	REPORTING TIME REQUIREMENTS	
4.1.3.1 [50.72b2(i)]	The initiation of any nuclear plant shutdown required by Technical Specifications.	4.1.3.1	As soon as practical and within 4 hours of the occurrence. (Use Enclosure 4.2)
4.1.3.2 [50.72b2(iv)(A)]	Any event that results or should have resulted in emergency core cooling system (ECCS) discharge into the reactor coolant system as a result of a valid signal except when the actuation results from and is part of a pre-planned sequence during testing or reactor operation.	4.1.3.2	As soon as practical and within 4 hours of the occurrence. (Use Enclosure 4.2)
4.1.3.3 [50.72b2(iv)(B)]	Any event or condition that results in actuation of the reactor protection system (RPS) when the reactor is critical except when the actuation results from and is part of a pre-planned sequence during testing or reactor operation.	4.1.3.3	As soon as practical and within 4 hours of the occurrence. (Use Enclosure 4.2)
4.1.3.4 [50.72b2(xi)]	Any event or situation related to the health and safety of the public or onsite personnel, or protection of the environment, for which a news release is planned or notification to other government agencies has been or will be made. Such an event may include an onsite fatality or inadvertent release of radioactively contaminated materials.	4.1.3.4	As soon as practical and within 4 hours of the occurrence. (Use Enclosure 4.2)
4.1.3.5 [72.75b1]	A spent fuel storage related event that prevents immediate actions necessary to avoid exposures to radiation or radioactive materials that could exceed regulatory limits, or releases of radioactive materials that could exceed regulatory limits (e.g., events such as fires, explosions, and toxic gas releases).	4.1.3.5	As soon as practical and within 4 hours of the occurrence. (Use Enclosure 4.2)
4.1.3.6 [72.75b2]	A defect in any spent fuel storage structure, system, or component which is important to safety.	4.1.3.6	As soon as practical and within 4 hours of the occurrence. (Use Enclosure 4.2)
4.1.3.7 [72.75b3]	A significant reduction in the effectiveness of any spent fuel storage confinement system during use.	4.1.3.7	As soon as practical and within 4 hours of the occurrence. (Use Enclosure 4.2)

..2.4.30 9/29/2003

Point Beach 1 **Exam Level** S

Mark Question | Print Recor | New Searc | Exit

Question

Given the following conditions:

-Unit 1 is at 100% power.
-Air in leakage to the condenser has resulted in steadily degrading condenser vacuum.
-A load reduction is directed in order to maintain vacuum.
-With the unit at approximately 85% power, a manual reactor trip is ordered due to the inability to maintain vacuum.
-All systems function as designed.

Based solely on the information given, which of the following describes the notification requirements for this event?

Answer: The NRC must be notified within 4 hours due to manual actuation of the Reactor Protection System.

Distracter 1 The State/County must be notified within 15 minutes of the trip due to reaching an Emergency Plan classification for an Unusual Event.

Distracter 2 Kewaunee Nuclear Power Plant must be notified within 1 hour in order to ensure grid stability is maintained.

Distracter 3 No notifications to any outside agencies are required for these conditions.

Distracter Analysis:

Answer:

Distracter 1:

Distracter 2:

Distracter 3: