AmerGen
An Exelon Company

AmerGen Energy Company, LLC
4300 Winfield Road
Warrenville, IL 60555

www.exeloncorp.com

RS-05-033

10 CFR 50.90

March 30, 2005

U. S. Nuclear Regulatory Commission
ATTN: Document Control Desk
Washington, DC 20555-0001

Clinton Power Station, Unit 1
Facility Operating License No. NPF-62
NRC Docket No. 50-461

Subject: Additional Information Supporting the Request for License Amendment Related to Application of the Alternative Source Term

References:

(1) Letter from Michael J. Pacilio (AmerGen Energy Company, LLC) to U. S. NRC, "Request for License Amendment Related to Application of Alternative Source Term," dated April 3, 2003

(2) Letter from U. S. NRC to John L. Skolds (AmerGen Energy Company, LLC), "Clinton Power Station, Unit 1 – Corrected Request for Additional Information Regarding Alternative Source Term Submittal (TAC No. MB8365)," dated November 18, 2003

(3) Letter from Keith R. Jury (Exelon generation Company, LLC) to U. S. NRC, "Additional Information Supporting the Request for License Amendment Related to Application of the Alternative Source Term," dated December 23, 2003

(4) Letter from Keith R. Jury (Exelon Generation Company, LLC) to U. S. NRC, "Additional Information Supporting the Request for License Amendment Related to Application of Alternative Source Term," dated December 17, 2004

In Reference 1, AmerGen Energy Company, LLC (AmerGen) submitted a request for a change to Appendix A, Technical Specifications (TS), of Facility Operating License No. NPF-62 for Clinton Power Station (CPS). Specifically, the proposed change is requested to support application of an alternative source term (AST) methodology, in accordance with 10 CFR 50.67, "Accident source term," with the exception that Technical Information Document (TID) 14844, "Calculation of Distance Factors for Power and Test Reactor Sites," will continue to be used as the radiation dose basis for equipment qualification.

The NRC, in Reference 2, provided AmerGen with a request for additional information. The initial response to this request was provided in Reference 3. The response to Question 1, provided in Reference 3, indicated that AmerGen would be revising the piping deposition calculation supporting the AST loss of coolant accident (LOCA) analysis to use the well-mixed modeling assumptions identified in NRC Staff Report AEB-98-03, "Assessment of the Radiological Consequences for the Perry Pilot Plant Application Using the Revised (NUREG-1465) Source Term." As a result of the need to perform this calculation revision, AmerGen committed to provide the response to Questions 4, 5, and 12 following completion of the reanalysis.

Subsequent to receipt of Reference 2, the NRC requested additional information concerning the proposed approach for the reanalysis effort. This request was provided electronically from Douglas V. Pickett (U. S. NRC) to Timothy A. Byam (AmerGen) on May 4, 2004. Specifically, the NRC was concerned with the possibility of a main steam line break and the effect this would have on the deposition assumed in the main steam piping, as well as the assumed mixing rate between the drywell and containment during the first 2 hours of the LOCA. AmerGen committed to address these issues as part of the LOCA reanalysis.

In addition to the above, the NRC also requested additional information related to crediting the standby liquid control system for pH control of the suppression pool and included a request for additional information concerning filter test criteria. This request was provided electronically from Douglas V. Pickett (U. S. NRC) to Timothy A. Byam (AmerGen) on March 25, 2004. The response to the request for crediting the standby liquid control system for pH control in the suppression pool was provided in Reference 4. As stated in Reference 4, AmerGen indicated that the LOCA reanalysis would address the assumptions for filter test criteria and that the response to the request for information concerning the filter test criteria would be provided as part of the response to the requests in Reference 2.

AmerGen has completed the revision of the AST LOCA analysis. Attachment 1 to this letter provides the requested information associated with the LOCA reanalysis. Attachment 2 provides the tables from the original amendment request revised to reflect changes based on the reanalysis.

There are no regulatory commitments contained in this letter.

AmerGen has reviewed the information supporting a finding of no significant hazards consideration that was previously provided to the NRC in Reference 1. The supplemental information provided in this submittal does not affect the bases for concluding that the proposed license amendment does not involve a significant hazards consideration.

If you have any questions concerning this letter, please contact Mr. Timothy A. Byam at (630) 657-2804.

I declare under penalty of perjury that the foregoing is true and correct. Executed on the 30th day of March 2004.

Respectfully,

Keith R. Jury

Keith R. Jury
Director – Licensing and Regulatory Affairs
AmerGen Energy Company, LLC

Attachments:

1. Additional Information Supporting the Request for License Amendment Related to Application of the Alternative Source Term
2. Revised Inputs, Assumptions, Results, and Regulatory Guide 1.183 Conformance Tables

cc: Regional Administrator – NRC Region III
NRC Senior Resident Inspector – Clinton Power Station
Illinois Emergency Management Agency – Division of Nuclear Safety

ATTACHMENT 1

Additional Information Supporting the Request for License Amendment Related to Application of the Alternative Source Term

The following requests (i.e., 4, 5, and 12) are from NRC letter to John L. Skolds (AmerGen Energy Company, LLC), "Clinton Power Station, Unit 1 – Corrected Request for Additional Information Regarding Alternative Source Term Submittal (TAC No. MB8365)," dated November 18, 2003.

Request 4:
On Page 11 of Attachment 2 to the submittal, the second paragraph states that AmerGen has used the Brockmann-Bixler model for main steamline deposition. The discussion and the data in Table 6 are insufficient to support staff confirmation. Please provide the following information.

a. *A single-line sketch of the four main steamlines and the isolation valves. Annotate this sketch to identify each of the control volumes assumed by AmerGen in the deposition model.*

b. *A tabulation of all of the parameters input into the Brockmann-Bixler model for each control volume shown in the sketch (and time step) for which AmerGen is crediting deposition. This includes:*

   - *Flow rate*
   - *Gas pressure*
   - *Gas temperature*
   - *Volume*
   - *Inner surface area*
   - *Total pipe bend angle*

c. *For each of the parameters in 4.b, provide a brief derivation and an explanation why that assumption is adequately conservative for a design-basis calculation. Address changes in parameters over time, e.g., plant cooldown.*

d. *Since the crediting of main steamline deposition effectively establishes the main steam piping as a fission product mitigation system, the staff expects the piping to meet the requirements of an engineered safety feature system, including seismic and single-failure considerations. Your submittal does not appear to address a single-failure of one of the main steam isolation valve (MSIVs). Such a failure could change the control volume parameters that are input to the deposition model. Previous implementations of main steam deposition have been found acceptable only if the licensee had modeled a limiting single-failure. Please explain why AmerGen feels that such a limiting failure need not be considered.*

e. *Please confirm that the main steam piping and isolation valves that establish the control volumes for the modeling of deposition were designed and constructed to maintain integrity in the event of the safe shutdown basis earthquake for Clinton. If the design-basis for the piping and components does not include integrity during earthquakes, please provide an explanation of how the Clinton design satisfies the prerequisites of the staff-approved NEDC-31858P-A, "BWROG Report for Increasing MSIV Leakage Rate Limits and Elimination of Leakage Control Systems." If piping systems and components at Clinton were previously found by*

the staff to be seismically rugged using the methodology of this Boiling Water Reactor Owners Group report, please provide a specific reference to the staff's approval.

f. *On page 24 of 30 in Table 2, you state that your submittal is in compliance with Paragraph 6.3 of Appendix A to regulatory guide (RG) 1.183, and reference the RADTRAD Brockman-Bixler approach apparently as establishing that conformance. However, Paragraph 6.3 of RG 1.183 states that the model should be based on well-mixed volumes, but other models such as slug flow may be used if justified. The Brockman-Bixler model is a slug-flow model. This paragraph did not endorse RADTRAD as an acceptable approach. RG 1.183 states that main steamline deposition will be considered on a case-by-case basis. The staff documented its evaluation of the first application of main steamline deposition credit in an alternate source term in Appendix A of the staff report: AEB-98-03, "Assessment of the Radiological Consequences for the Perry Pilot Plant Application using the Revised (NUREG-1465) Source Term." The methodology of this report, which can be found online in ADAMS at ML011230531, was used by at least two additional licensees. The staff did accept one application of plug flow in which the licensee has committed to maintaining a seismically rugged drain path from the 3rd MSIV to and through the condenser. This safety evaluation is on ADAMS at ML011660142. Please provide a justification for your proposed modeling approach or re-perform the analyses.*

Response 4:

As committed to in the AmerGen Energy Company, LLC (AmerGen) letter dated December 23, 2003 (Reference 1), AmerGen has revised the alternative source term (AST) loss of coolant accident (LOCA) analysis. As part of this calculation revision, the AST LOCA calculation pipe deposition credit has been revised to replace the Brockmann-Bixler methodology for deposition of iodine in piping with a nodalized, well-mixed model, consistent with that used and described in NRC staff report AEB-98-03. In addition, for added conservatism, a worst-case rupture of the longest credited steam line upstream of the inboard MSIV is assumed, thereby making that line segment non-mechanistically unavailable for deposition credit.

The following is provided in support of the NRC Request 4.

4.a A single-line sketch of the four main steamlines and the isolation valves is provided as attached Figure 4a, "Post-LOCA MSIV Leakage Pathway Nodalization." This figure has been annotated to identify each of the control volumes assumed in the deposition model.

4.b Tabulation of the key deposition parameters input into the model for each control volume, as a function of time into the accident, is provided in the attached Table 1, "Parameters for MSIV Piping Deposition Credit." Pipe bend angles are not credited, and therefore are not included in this table. For additional detail, a spreadsheet (including formulas) of the piping volume and surface areas, flow rate, gas pressure and temperature correction factors, and deposition

decontamination factors (and filter efficiency equivalents as RADTRAD input) is provided as Appendix A to this attachment.

4.c For each of the parameters in Table 1, a brief derivation and an explanation as to why that assumption is conservative for the AST LOCA calculation is provided. Where relevant the effects of timing are also included in Table 1. For plant cooldown, additional timing considerations are documented in page 1 of the spreadsheet provided in Appendix A to this attachment.

4.d The Clinton Power Station (CPS) main steam piping does meet the requirements of an engineered safety feature system including seismic and single-failure considerations. As noted in Table 1 and shown on Figure 4a, limiting single failures of the main steam isolation valves (MSIVs) have been considered in the AST LOCA reanalysis. Outboard MSIV failure was conservatively assumed as the single active failure since this maximizes the volume of piping in which the fluid is depressurized. This in turn minimizes deposition. For conservatism, for consistency with AEB-98-03, and because of limits in the number of RADTRAD compartments, this treatment is used for all steam lines. In addition, as described in Table 1, all of this modeled piping is Seismic Category I.

4.e The main steam piping and isolation valves were designed and constructed to maintain integrity in the event of a safe shutdown basis earthquake. As described in CPS Updated Safety Analysis Report (USAR) Section 5.4.9, the main steam lines have been designed to accommodate operational stresses, such as internal pressures, safe shutdown earthquake, and other dynamic loads, without a failure that could lead to the release of radioactivity in excess of the guideline values in published regulations. The main steam piping from the reactor vessel to the shutoff valves is designed and constructed as Seismic Category I. The main steam isolation valve installations are designed as Seismic Category I equipment as described in CPS USAR Section 5.4.5. The valve assembly is manufactured to withstand the safe shutdown earthquake forces applied at the mass center of the extended mass of the valve operator, assuming the cylinder/spring operator is cantilevered from the valve body and the valve is located in a horizontal run of pipe. The parts of the main steam isolation valves that constitute a process fluid pressure boundary are designed, fabricated, inspected, and tested as required by the ASME Code, Section III.

4.f AmerGen has revised the LOCA analysis including the piping deposition and plateout model used (see Appendix A of this attachment). Modeling was done using RADTRAD with the piping treated as well mixed volumes. As noted in Request 4.f, this approach is consistent with Regulatory Guide (RG) 1.183, "Alternative Radiological Source Terms for Evaluating Design Basis Accidents at Nuclear Power Reactors," Appendix A and AEB-98-03.

The original inputs, assumptions and results of the AST LOCA analysis were provided in the license amendment request submitted in the AmerGen letter dated April 3, 2003 (Reference 2). The revised AST LOCA calculation utilized updated inputs and assumptions to determine the dose contributors and radiological consequences

associated with the LOCA event. As a result of the LOCA reanalysis, Tables 4, 5, 6, 10 and 11 of Attachment 2 to Reference 2, have been revised to reflect the new inputs, assumptions, and results. In the AmerGen response to Request 1, as provided in the Attachment to Reference 1, an error in the wording in Table 4 was identified. AmerGen committed in Reference 1 to provide a revised Table 4 correcting this error. Therefore, correction of the wording error is also reflected in the attached Table 4. The revised tables are provided in Attachment 2 to this letter and supersede the versions provided in Reference 2. Attachment 5 to Reference 2 provided tables documenting CPS conformance with RG 1.183. As a result of the revision to the LOCA analysis, the table showing conformance with RG 1.183 Appendix A (Loss of Coolant Accident) was updated. The revised portions of this table are also provided in Attachment 2 to this letter and supersede the portions of Attachment 5 to Reference 2.

Request 5:
Provide the corresponding information requested in Item 4 for the containment purge penetrations.

Response 5:
As discussed above in the response to Request 4, AmerGen committed in Reference 1 to revise the AST LOCA analysis. As part of this revision, the pipe deposition credit has been revised to replace the Brockmann-Bixler methodology for deposition of iodine in piping with a nodalized, well-mixed model, consistent with that used and described in NRC staff report AEB-98-03.

The following is provided in support of NRC Request 5.

5.a A single-line sketch of the two containment purge penetrations and their isolation valves is provided as attached Figure 5a, "Post-LOCA Purge Penetration Leakage Pathway Nodalization." This figure has been annotated to identify each of the control volumes assumed in the deposition model.

5.b The tabulation of the key deposition parameters input into the model for each control volume, as a function of time into the accident, is provided as Table 2, "Parameters for Purge Piping Deposition Credit." Pipe bend angles are not credited, and therefore are not considered. For additional detail, a spreadsheet (including formulas) of the piping volume and surface areas, flow rates, pressures and temperatures utilized, and deposition decontamination factors (and filter efficiency equivalents as RADTRAD input) is provided as Appendix B to this attachment.

5.c For each of the parameters identified in Table 2, a brief derivation and an explanation as to why that assumption is conservative for the AST LOCA calculation is also provided. Where relevant the effects of timing are also included in Table 2. Additional timing considerations are documented in page 1 of the spreadsheet provided in Appendix B of this attachment.

5.d The CPS containment purge piping does meet the requirements of an engineered safety feature system including seismic and single-failure considerations. As noted in Table 2 and shown on Figure 5a, failure of the outside containment isolation valve on each purge line was conservatively assumed as the single active failure. This assumption maximizes the flow and minimizes the deposition in the piping. The conservative and NRC-recommended well-mixed methodology of AEB-98-03 is used for deposition modeling. In addition, as described in Table 2, all of the credited piping is Seismic Category I.

5.e CPS USAR Section 9.4.6.1.1.2 states that the primary containment purge system isolation valves at the containment penetration and the intermediate pipe between the valves are required during and after all abnormal station operating conditions to maintain the containment boundary integrity. This part of the system is designed as Seismic Category I. Seismic Category I systems and components are analyzed under the loading conditions of the safe shutdown earthquake.

5.f AmerGen has revised the LOCA analysis including the piping deposition and plateout model used (see Appendix B of this attachment). Modeling was done using RADTRAD with the piping treated as well mixed volumes. This approach is consistent with RG 1.183, Appendix A and AEB-98-03.

Tables 4, 5, 6, 10 and 11 from Attachment 2 of Reference 1 have been updated to reflect the changes for the containment purge lines that support the revised LOCA analysis. These revised tables are provided in Attachment 2 to this letter. The affected portions of the table, addressing conformance with RG 1.183 Appendix A (i.e., Attachment 5 to Reference 1), have been revised and are also provided in Attachment 2.

Request 12:

In Table 5 of Attachment 2 to the submittal, the last table entry refers to inleakage control necessary to maintain constant iodine protection factor (IPF). Please explain how these data are being used to show compliance with control room habitability requirements. Were these two expressions used to establish the 650 cfm filtered and 600 cfm unfiltered inleakage rates shown in Table 5? If these expressions were used as part of the basis for the inleakage rates, please provide the following information:

a. The derivation of the numeric constants in the two expressions.

b. An explanation of how these expressions were verified and validated.

c. An explanation of how AmerGen resolved the IPF caveat provided in Footnote 15 on Page 1.183-18 of RG 1.183 in finding (as expressed in Table 1 of Attachment 5 of the submittal) that the AmerGen submittal conformed with Paragraph 4.2.3 of RG 1.183.

Response 12:
CPS has a pressurized control room with vestibule entries to minimize inleakage potential during ingress/egress. Therefore, leakage is generally expected to be out of the control room, and even ingress/egress intake effects will be minimized due to mixing and dilution in the vestibule air. However, a portion of the control room heating, ventilating, and air conditioning (HVAC) recirculation filter inlet ducting is at a negative pressure with respect to the surrounding air space, and so there is some potential for inleakage that would be filtered by the recirculation filters. The November 2004 tracer gas test results provided to the NRC in Reference 3 demonstrate that there is no measurable unfiltered inleakage into the CPS control room. Therefore, the AST LOCA calculation has been re-analyzed to assume no unfiltered inleakage coupled with a filtered inleakage allowance of 2250 cubic feet per minute (cfm), which bounds the measured values. This inleakage allowance is an assumed value shown to be acceptable by the revised LOCA analysis.

Associated with this filtered inleakage, an iodine removal efficiency credit of 68% for all chemical forms is used. This efficiency accounts for 2% bypass and 30% penetration for the 70% efficient carbon (charcoal) recirculation filter. Additionally, a conservative approximation to convert between filtered and unfiltered inleakage flow parameters while maintaining the same or lower post-LOCA dose consequences was developed to give flexibility in future applications. The basis of this approximation is that with a total nominal bypass of the inleakage filtration of 32%, 0.32 times every unit of filtered inleakage flow equals 1 unit of unfiltered inleakage on a conservative dose consequence basis. Therefore,

$$(I_{DF} - I_{KF}) * 0.32 = I_{CU}$$

where:

I_{DF} = Design Basis Filtered Inleakage
I_{KF} = Known Filtered Inleakage
I_{CU} = Calculated Allowable Unfiltered Inleakage

As an example using the previously assumed 650 cfm of filtered inleakage, the conservative allowable unfiltered inleakage would be calculated to be the following.

$$(2250 - 650) * 0.32 = 512 \text{ cfm}$$

This simplified conversion has been confirmed to be conservative using RADTRAD sensitivity analyses. This conversion was also shown to be conservative while avoiding steady-state control room modeling concerns as stated in Footnote 15 of RG 1.183. This correlation replaces the approach based on iodine protection factor (IPF) used previously. The questions above are therefore considered no longer applicable.

Table 5 of Attachment 2 to Reference 2 has been revised to reflect the new relationship for determining the control room unfiltered inleakage allowance. The revised Table 5 is provided in Attachment 2 of this letter and supersedes the Table 5 provided in Reference 2.

ATTACHMENT 1

Additional Information Supporting the Request for License Amendment Related to Application of the Alternative Source Term

The following requests were provided electronically from Douglas V. Pickett (U. S. NRC) to Timothy A. Byam (AmerGen) on May 4, 2004.

In its RAI dated October 30, 2003, the staff requested additional information regarding several aspects of AmerGen's DBA analyses supporting the proposed license amendment. The staff issued a corrected set of RAIs on November 18. Questions four and five addressed AmerGen's modeling of fission product deposition in piping systems. Those questions challenged the appropriateness of the analysis approach used by the AmerGen contractor. The staff had previously discussed similar issues with analyses performed by the same contractor for DTE Energy's Fermi facility. AmerGen did not request to discuss the RAI questions with the staff but indicated that they would respond to the questions. By letter dated December 23, 2003, AmerGen provided a response to the RAI, deferring the responses for Questions 4, 5, and 12 to a later correspondence.

In the intervening period, DTE Energy outlined, via teleconferences, a re-analysis approach intended to address the staff's concerns regarding fission product deposition in piping. The staff indicated that the proposed approach appeared to address many of the staff's concerns, but would not take a position on its acceptability until the staff had the opportunity to review the docketed re-analyses. Shortly thereafter, the staff obtained information that two aspects of DTE Energy's proposed re-analysis approach were questionable.

Since the DTE Energy and AmerGen re-analyses were being performed by the same contractor, it was determined that the following concerns apply to the AmerGen re-analyses:

Request 1:
With regard to AmerGen's modeling of the deposition of fission products in piping, the staff is of the opinion that credit for deposition cannot be taken for one of the main steam lines between the reactor pressure vessel and the inboard main steam isolation valve (MSIV). AmerGen's analysis credited deposition in all four steam lines. NRC regulations and regulatory guidance require an evaluation of a spectrum of potential break sizes and locations within the reactor coolant pressure boundary with regard to emergency core coolant system (ECCS) performance. Analyses of design basis LOCA radiological consequences stylistically assume that the ECCS fails resulting in the substantial release of fission products, regardless of break size or location. Although the rupture of recirculation system piping was used as the limiting case in the licensing of Clinton, AmerGen's proposal to credit fission product deposition in the main steam lines raises the possibility that a rupture of one of the main steam lines upstream of the inboard MSIV could be more limiting since crediting deposition in the ruptured line would be inappropriate. The in-containment main steam line assumed to fail should be selected so as to minimize the assumed deposition credit. Note that the assignment of the limiting single failure of an MSIV to close may change as a result of the assumed main steam line failure. Please update your analyses and submittal or provide further justification why you believe your proposed approach is adequately conservative.

Response 1:
As described above in the response to Request 4, the analyses have been updated to incorporate an assumed rupture of the limiting main steam line inside containment with an assumed limiting single failure. As proposed in the requested Technical Specification (TS) change and described in Reference 2, the analyses assume MSIV leakage at a maximum of 100 standard cubic foot per hour (scfh) per steam line and a total of no more than 250 scfh in all four lines. Therefore, piping deposition credit is minimized by maximizing flow through the shorter steam lines and by the assumption of the LOCA pipe rupture between the reactor vessel and inboard MSIV. Intact main steam lines B and C are the longest. The revised analysis assumes no flow through line C and the in-containment rupture in line B. As described in Table 1, the analysis assumes 100 scfh through line A, 50 scfh through line D, and 100 scfh through the remainder of the ruptured line B.

Each of the main steam lines with assumed flow (i.e., lines A, B, and D) is modeled as three, well mixed nodes. As shown on Figure 4a, the first node represents the piping from the reactor pressure vessel to the inboard MSIV, the second node represents the piping from the inboard MSIV to the outboard MSIV, and the third node represents the piping from the outboard MSIV to the Turbine/Auxiliary Building (secondary containment) wall. This nodalization is conservative since it results in the depressurization of the penetration piping section between the inboard and outboard MSIVs; therefore, higher flow velocities leading to less settling and deposition are applied in the nodes downstream of the inboard MSIV. In the updated analyses, a main steam line break is assumed to be located in the first node of main steam line B. Intact line B is the longest steam line and therefore, represents the worst scenario since it minimizes the assumed deposition by not crediting any deposition in the first node of that line. In addition, an outboard MSIV failure is assumed as the single active failure since this maximizes the volume of piping in which the fluid is depressurized. Table 1 provides a summary of the main steam line deposition credit parameters used in the revised analysis.

Request 2:
AmerGen's modeling of the MSIV leakage pathway appears to treat the drywell and primary containment as a single well-mixed volume from the start of the event. This assumption may not be supportable during the early stages of the event. The initial blowdown of the reactor coolant system would have occurred prior to the onset of the in-vessel release phase. Thus, the driving force for mixing between the two volumes will be less. Since the LOCA break communicates with the drywell volume only the use of the total containment free volume has the effect of reducing the concentration of the fission products available for release via MSIV leakage, a non-conservative situation. Because of this uncertainty, the staff deterministically assumes that complete mixing does not occur until 2 hours when core reflood is projected. For BWR Mark III containments, the staff has previously found a mixing rate of 3000 cfm between the drywell and containment acceptable for the 0 to 2-hour period. Please update your analyses and submittal or provide further justification why you believe your proposed approach is adequately conservative.

Response 2:
As stated in Table 2 of Attachment 5 to Reference 2, CPS is a BWR with a Mark III Containment. RG 1.183, Appendix A, Section 3.7 states that for BWRs with Mark III containments, the leakage from the drywell into the primary containment should be based on the steaming rate of the heated reactor core, with no credit for core debris relocation. This leakage should be assumed during the two-hour period between the initial blowdown and termination of the fuel radioactivity release. This is the approach that AmerGen used in the CPS AST LOCA analysis in Reference 2 and therefore, there was no need to update the analysis. As described in Reference 2, AmerGen used a drywell bypass leakage rate of 3000 cfm for the first two hours, followed by an assumption of well mixed drywell-containment conditions thereafter. This approach is consistent with the approach reviewed and approved for the Perry Nuclear Power Plant (also a Mark III containment) in Reference 4.

The following requests were provided electronically from Douglas V. Pickett (U. S. NRC) to Timothy A. Byam (AmerGen) on March 25, 2004. Responses to the additional RAI's on Filter Test Criteria were deferred as part of the AmerGen response provided in Reference 5. The following response is provided for the deferred requests.

Request 1:
Regulatory Guide 1.52, establishes the criterion for penetration in the laboratory testing of ESF filter systems. In Revision 2 (referenced in your specification), the allowable penetration for a 4 inch bed filter (SGTS or CRV Makeup Filter) is 0.175%. Thus the current technical specification for these two filters is in compliance with the Regulatory Guide. In Revision 3 of Regulatory Guide 1.52, some relaxation was allowed and the penetration criterion for a 4 inch bed during a laboratory test was increased to 0.5%. The staff would find compliance with either Revision 2 or Revision 3 to be acceptable. In the submittal, a change for an allowable penetration to 1.5% was requested. Please justify why it is necessary to deviate from the Regulatory Guide criterion for laboratory testing.

Request 2:
Regulatory Guide 1.52, establishes the criterion for penetration in the laboratory testing of ESF filter systems. In Revision 2 (referenced in your specification), the allowable penetration for a 2 inch bed filter (CRV Recirculation filter) is less than 1%. In Revision 3 of Regulatory Guide 1.52, some relaxation was allowed and the penetration criterion for a 2 inch bed during a laboratory test was increased to less than 2.5%. The current technical specification for this filter which allows 6% is not in compliance with the Regulatory Guide. In the submittal, a change for an allowable penetration to 15% was requested. Please justify why it is necessary to increase the testing criterion which exceeds the requirements of Regulatory Guide 1.52.

Response 1 and 2:
The proposed allowable penetration acceptance criteria are based on the reduced credit taken for filter efficiency in addition to the safety factors allowed in accordance with NRC Generic Letter (GL) 99-02, "Laboratory Testing of Nuclear-Grade Activated Charcoal." GL 99-02 indicates that the test method referred to in RG 1.52, "Design, Testing, and

Maintenance Criteria for Post Accident Engineered-Safety-Feature Atmosphere Cleanup System Air Filtration and Adsorption Units of Light-Water-Cooled Nuclear Power Plants," Revision 2 (i.e., Test 5.b from Table 5-1 of ANSI N509-1976) provides a less accurate and less realistic indication of the charcoal's capability than testing performed in accordance with American Society for Testing and Materials (ASTM) D3803-1989, "Standard Test Method for Nuclear-Grade Activated Carbon." GL 99-02 states that testing nuclear-grade activated charcoal to standards other than ASTM D3803-1989 does not provide assurance for complying with the current licensing basis as it relates to the dose limits of GDC 19 and Subpart A of 10 CFR 100. CPS currently performs charcoal testing in accordance with the requirements of GL 99-02 and tests the charcoal adsorber samples in accordance with ASTM D3803–1989.

To provide guidance for addressing filter testing in plant TS, Attachment 2 to GL 99-02 provides sample TS for use by plants with Improved Standard Technical Specifications. This TS wording has been incorporated into the current approved version of the BWR/6 Standard Technical Specifications (i.e., NUREG-1434 Revision 3). Attachment 2 to GL 99-02 and NUREG-1434 provide an equation for determining the appropriate penetration acceptance criterion in the TS for the representative sample tested in accordance with ASTM D3803-1989. As noted in Attachment 2 to Reference 2, the revised penetration acceptance criteria were based on the reduced credit taken for filter efficiency, and safety factors allowed in accordance with GL 99-02. The following equation, taken from GL 99-02, was used to determine the proposed penetration acceptance criteria.

$$\text{Allowable Penetration} = \frac{(100\% - \text{Methyl Iodide Efficiency for charcoal in Licensee Accident Analysis})}{\text{Safety Factor}}$$

As stated in GL 99-02, when testing is performed in accordance with ASTM D3803-1989 at a temperature of 30°C and 95% relative humidity (or 70% relative humidity with humidity control), the NRC will accept a safety factor ≥ 2.

Therefore, based on the above formula and assuming a charcoal efficiency in the radiological analysis of 97% (as documented in Attachment 2 to Reference 2), the allowable penetration for the standby gas treatment system and control room ventilation system make up filter unit was determined to be the following.

$$\text{Allowable penetration} = (100-97) / 2 = 1.5\%$$

Similarly, assuming a charcoal efficiency in the radiological analysis of 70%, the allowable penetration for the control room ventilation system recirculation filter was determined to be the following.

$$\text{Allowable penetration} = (100-70)/2 = 15\%$$

In summary, the proposed filter penetration acceptance criteria were identified based on the direction provided in GL 99-02. The GL methodology was used to determine the allowable penetration based on the filter efficiency and an acceptable safety factor. The

proposed filter penetration acceptance criteria are consistent with GL 99-02 and the wording in the Standard Technical Specifications.

References:

1. Letter from Keith R. Jury (Exelon Generation Company, LLC) to U. S. NRC, "Additional Information Supporting the Request for License Amendment Related to Application of the Alternative Source Term," dated December 23, 2003

2. Letter from Michael J. Pacilio (AmerGen Energy Company, LLC) to U. S. NRC, "Request for License Amendment Related to Application of Alternative Source Term," dated April 3, 2003

3. Letter from Robert S. Bement (AmerGen Energy Company, LLC) to U. S. NRC, "Control Room Envelope Unfiltered Air Inleakage Test Results in Response to Generic Letter 2003-01, 'Control Room Habitability'," dated February 8, 2005

4. Letter from U. S. NRC to Lew W. Myers (FirstEnergy Nuclear Operating Company), "Amendment No. 103 to Facility Operating License No. NPF-58 – Perry Nuclear Power Plant, Unit 1 (TAC No. M96931)," dated March 26, 1999

5. Letter from Keith R. Jury (Exelon Generation Company, LLC) to U. S. NRC, "Additional Information Supporting the Request for License Amendment Related to Application of Alternative Source Term," dated December 17, 2004

6. NEDC-32091, "MSIV Leakage Radiological Dose Assessment Code Version 1.1 – Users Manual," Revision 0 dated August 1992

7. NEDC-31858P, "BWROG Report for Increasing MSIV Leakage Rate Limits and Elimination of Leakage Control Systems," dated September 1993

Table 1
Parameters for MSIV Piping Deposition Credit

Parameter	Value(s)	Basis, Conservatisms
Leakage Distribution	100 scfh in MS Line B 100 scfh in MS Line A 50 scfh in MS Line D 0 scfh in MS Line C	Leakage limits are 250 scfh total, and 100 scfh for any one line. Piping deposition credit is minimized by maximizing flow through shorter lines, and by the assumption of the LOCA pipe rupture to be located in the first node of the longest Line B (prior to the break), with no deposition credited in this node. When intact, lines B and C are the longest.
Nodalization; Single Active Failure Assumptions; Seismic Design of Credited Piping	Three node treatment is used for each steam line in which flow occurs. The first node is from the reactor vessel to the inboard MSIV. The second node is the penetration piping from the inboard MSIV to the assumed failed outboard MSIV. The third node is from the outboard MSIV to the Turbine/Auxiliary Building (secondary containment) Wall. All of this modeled piping is Seismic Category I.	Outboard MSIV failure is assumed as the Single Active Failure since this maximizes the volume of piping in which the fluid is depressurized. This in turn minimizes deposition. The conservative and NRC-recommended well-mixed methodology of AEB-98-03 is used for deposition modeling. For conservatism, for consistency with AEB-98-03, and because of limits in the number of RADTRAD compartments, this treatment is used for all steam lines. The LOCA pipe rupture is conservatively considered to be in the first node of Line B, with no deposition credited in this node but full MSIV leakage flow from containment to downstream nodes.
Node 1 Piping Volumes and Surface Areas Credited	For Aerosol Settling LINE — Vol (ft^3) — Area(ft^2) MS A — 86 — 91.5 MS D — 86 — 91.5 For Elemental Iodine Deposition LINE — Vol (ft^3) — Area(ft^2) MS A — 157 — 334 MS D — 157 — 334	For Aerosols, settling only considers horizontal piping. Settling area is bottom half of horizontal piping. No credit is taken for deposition of organics. For elemental, deposition considers total piping area and volume.

Table 1
Parameters for MSIV Piping Deposition Credit

Parameter	Value(s)	Basis, Conservatisms
Node 2 Piping Volumes and Surface Areas Credited	For Aerosol Settling LINE / Vol (ft^3) / Area(ft^2) MS A / 151 / 159.9 MS D / 151 / 159.9 MS B / 151 / 159.9 For Elemental Iodine Deposition LINE / Vol (ft^3) / Area(ft^2) MS A / 151 / 320 MS D / 151 / 320 MS B / 151 / 320	For Aerosols, settling only considers horizontal piping. Settling area is bottom half of horizontal piping. No credit is taken for deposition of organics. For elemental, deposition considers total piping area and volume.
Node 3 Piping Volumes and Surface Areas Credited	For Aerosol Settling LINE / Vol (ft^3) / Area(ft^2) MS A / 117 / 123.9 MS D / 117 / 123.9 MS B / 117 / 123.9 For Elemental Iodine Deposition LINE / Vol (ft^3) / Area(ft^2) MS A / 117 / 248 MS D / 117 / 248 MS B / 117 / 248	For Aerosols, settling only considers horizontal piping. Settling Area is Bottom Half of Pipe. No credit is taken for deposition of organics. For elemental, deposition considers total piping area and volume.
Leak Rate from Containment through MS Lines for first 24 hours	Leak Rate (cfh) = Measured MSIV Leakage Limit (scfh) / $[P_c*(T_{std}/T_c)]$ where: P_c= total containment pressure (atm) T_{std}= standard temperature, absolute (°R) T_c= bulk containment temperature, absolute (°R) Leak Rates LINE / (scfh) / (cfh) / (cfm) MS A / 100 / 93.5 / 1.558 MS D / 50 / 46.7 / 0.779 MS B / 100 / 93.5 / 1.558	The methodology, as detailed in BWROG NEDC-32091 and NEDC-31858P (References 6 and 7) and implemented in the Appendix A spreadsheet, accounts for post-LOCA containment response considering partial pressures of water vapor, initial containment non-condensables, plus H_2 from Zirconium-Water reaction.

Table 1
Parameters for MSIV Piping Deposition Credit

Parameter	Value(s)	Basis, Conservatisms
Fluid Temperature for first 24 hours for flow rate and deposition velocity assessment	550 °F	The normal operation steam line temperature is used for conservatism.
Node 1 Flow Rate for first 24 hours	LINES Flow Rate (cfm) MS A 1.558 MS D 0.779 MS B 1.558	Values are as determined from the containment leak rate as documented in Appendix A. No deposition is credited in Node 1 of MS B.
Nodes 2 and 3 Flow Rates for first 24 hours	LINES Flow Rate (cfm) MS A 3.188 MS D 1.594 MS B 3.188	Values are conservatively expanded based on initial steam line pipe wall temperatures of 550 °F, compared with standard conditions at 68 °F. Therefore, leakage flow rates in scfh are multiplied by: (550+460)/[(68+460)*60] = 1.913 / 60 = 0.03188 Pressures are conservatively assumed to be atmospheric so the flow is fully expanded.
Node 1 Leak Rate and flow rates after 24 hours	Leak Rates and flow rates are assumed to be reduced to 64% of the initial values after 24 hours.	Containment pressures at 24 hours are approximately 18.4 psia (3.7 psig) for minimum ECCS in operation. For MSIV leakage testing performed at the CPS P_a of 9 psig, $(3.7 / 9)^{0.5} = 0.64$ Conservatively, no credit is taken for the continued pressure reduction after 24 hours, or for the drywell and wetwell pressures well below 9 psig during the first 24 hours after the first approximately one minute of the accident.
Nodes 2 and 3 flow rates after 24 hours	Flow rates are assumed to be reduced to 64% of the initial values after 24 hours, with steam line wall temperatures of 410 °F from 24 to 96 hours and 200 °F from 96 to 720 hours.	Flow rates are conservatively expanded based on a conservative representation of steam line pipe wall temperatures indicated from J. E. Cline's August 20, 1990 "MSIV Leakage – Iodine Transport Analysis".

Table 2
Parameters for Purge Piping Deposition Credit

Parameter	Value(s)	Basis, Conservatisms
Leakage Distribution	100% (of 0.16 cfm) through Purge Penetration 101 100% (of 0.16 cfm) through Purge Penetration 102	Leakage limit is 0.16 cfm, or 2% L_a, per purge line.
Nodalization for AEB-98-03 well mixed modeling; Single Active Failure Assumptions; Seismic Design of Credited Piping	A one node treatment is used for the air leakage through the purge lines. The node is conservatively assumed to be from containment to the outboard isolation valve. All of the credited piping is Seismic Category I.	For simplicity and conservatism, only a single node was credited due to the small contribution of this pathway to the total calculated dose. Failure of the outside containment isolation valve on each line is assumed as the Single Active Failure since this maximizes the flow and minimizes deposition. The conservative and NRC-recommended well-mixed methodology of AEB-98-03 is used for deposition modeling
Piping Volumes and Surface Areas	For Aerosol Settling LINE — Vol (ft^3) — Area(ft^2) Purge Penetration 101 — 373 — 259.25 Purge Penetration 102 — 330 — 229.45 For Elemental Iodine Deposition LINE — Vol (ft^3) — Area(ft^2) Purge Penetration 101 — 373 — 518.00 Purge Penetration 102 — 349 — 486.00	For Aerosols, settling only considers horizontal piping. Settling area is bottom half of horizontal piping. No credit is taken for deposition of organics. For elemental, deposition considers total piping area and volume.

Table 2
Parameters for Purge Piping Deposition Credit

Parameter	Value(s)	Basis, Conservatisms
Leak Rate From Containment to Purge Penetrations	*Leak Rate = (Total Primary Containment Volume) * 0.02 * L_a (0.65% / day) / 1440 min/day* *= 1.754E+06 ft^3 * 0.02 * 0.0065 / 1440 = 0.158 cfm, rounded to 0.16 cfm.* LINES — Flow Rate (cfm) Purge Penetration 101 — 0.16 Purge Penetration 102 — 0.16	CPS isolation valves are tested at a P_a of 9 psig.
Piping Node Flow Rate	LINES — Flow Rate (cfm) Purge Penetration 101 — 0.325 Purge Penetration 102 — 0.325	To correct for upstream pressure and temperature conditions, 0.16 scfm is multiplied by (see Appendix B for values): *(14.7 psia+9 psig)(206 + 460) / [(14.7 psia) (68 + 460)]* Therefore the flowrate becomes 0.325 cfm.
Leak Rate and flow rates after 24 hours	Leak Rates and flow rates are assumed to be reduced by 50% after 24 hours.	As shown in USAR Figure 6.2-6a, containment pressures at 24 hours are less than 50% of P_a. Conservatively, no credit is taken for the continued pressure reduction after 24 hours, or for the drywell and wetwell pressures well below 9 psig during the first 24 hours after the first approximately one minute of the accident.

Figure 4a: Post-LOCA MSIV Leakage Pathway Nodalization

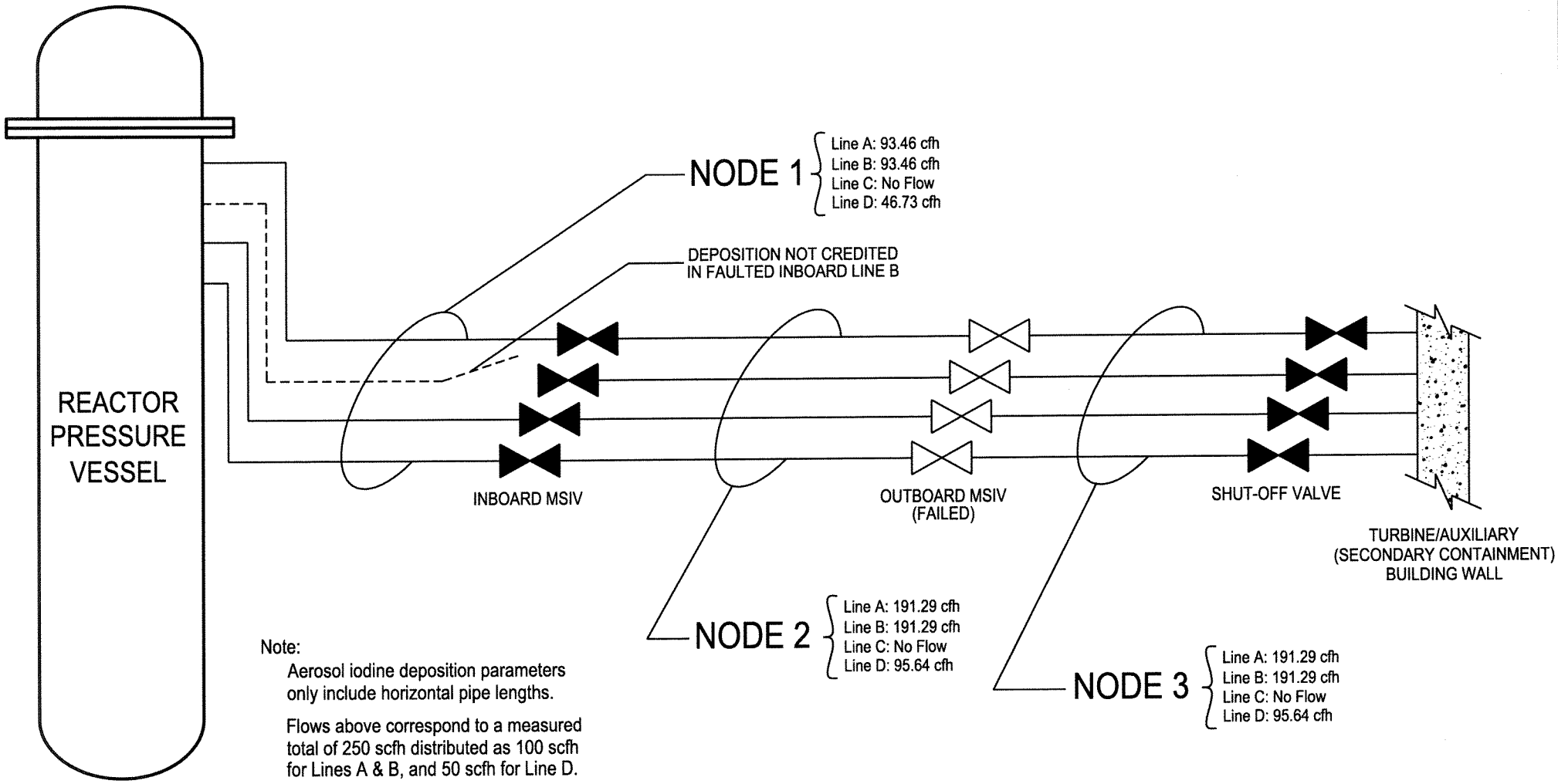

Note:

Aerosol iodine deposition parameters only include horizontal pipe lengths.

Flows above correspond to a measured total of 250 scfh distributed as 100 scfh for Lines A & B, and 50 scfh for Line D.

Figure 5a: Post-LOCA Purge Penetration Leakage Pathway Nodalization

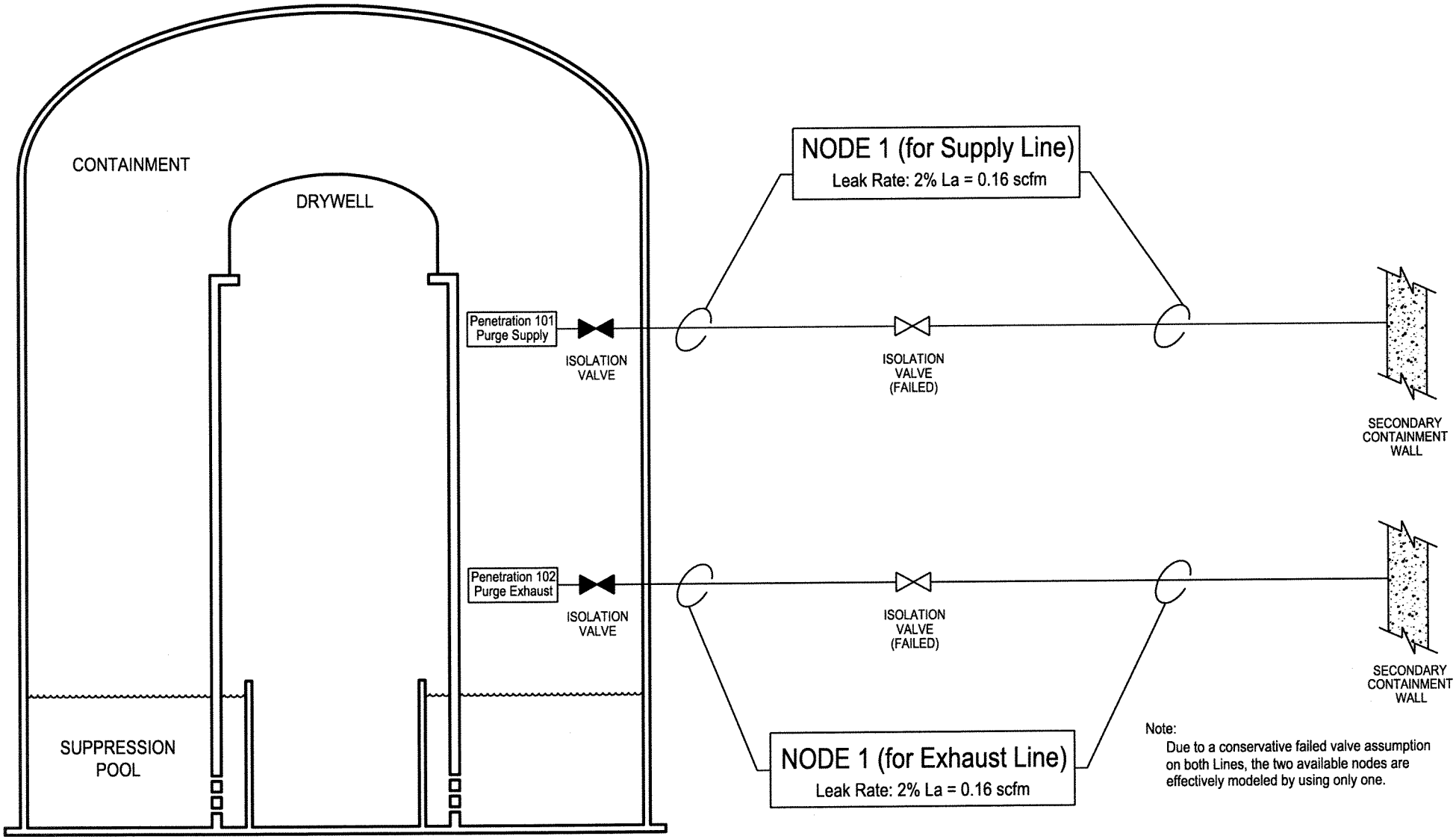

APPENDIX A

MSIV Piping Deposition Credit Spreadsheets

	A	B	C	D	E	F	G	H	I	J	K	L	M	N	O	P
1	**CPS Determination of MSL Decontamination Factors Due to Iodine Deposition**															
2																
3			**Inboard A**	**[12]Inboard B**	**Inboard C**	**Inboard D**		**Penetration A**	**[12]Penetration B**	**Penetration C**	**Penetration D**		**Outboard A**	**[12]Outboard B**	**Outboard C**	**Outboard D**
4	**[1]Total Pipe Surface Area (ft^2)**		334	0	397	334		320	320	320	320		248	248	248	248
5	**[1]Total Pipe Volume (ft^3)**		157	0	187	157		151	151	151	151		117	117	117	117
6	**[1]Horizontal Total Pipe Surface Area (ft^2)**		183	0	246	183		320	320	320	320		248	248	248	248
7	**Horizontal Settling Pipe Surface Area (ft^2)**		91.46	0.00	123.03	91.46		159.92	159.92	159.92	159.92		123.89	123.89	123.89	123.89
8	**[1]Horizontal Pipe Volume (ft^3)**		86	0	116	86		151	151	151	151		117	117	117	117
9	**[2]Aerosol Settling Velocity (m/s)**		1.170E-03	1.170E-03	1.170E-03	1.170E-03		1.170E-03	1.170E-03	1.170E-03	1.170E-03		1.170E-03	1.170E-03	1.170E-03	1.170E-03
10	**Aerosol Settling Velocity (ft/s)**		3.839E-03	3.839E-03	3.839E-03	3.839E-03		3.839E-03	3.839E-03	3.839E-03	3.839E-03		3.839E-03	3.839E-03	3.839E-03	3.839E-03
11	**[5,6]Elemental Deposition Velocity 0-24hrs (m/sec)**		5.574E-06	5.574E-06	5.574E-06	5.574E-06		5.574E-06	5.574E-06	5.574E-06	5.574E-06		5.574E-06	5.574E-06	5.574E-06	5.574E-06
12	**[5,6]Elemental Deposition Velocity 24-48hrs (m/sec)**		1.248E-05	1.248E-05	1.248E-05	1.248E-05		1.248E-05	1.248E-05	1.248E-05	1.248E-05		1.248E-05	1.248E-05	1.248E-05	1.248E-05
13	**[5,6]Elemental Deposition Velocity 48-72hrs (m/sec)**		2.897E-05	2.897E-05	2.897E-05	2.897E-05		2.897E-05	2.897E-05	2.897E-05	2.897E-05		2.897E-05	2.897E-05	2.897E-05	2.897E-05
14	**[5,6]Elemental Deposition Velocity 72-96hrs (m/sec)**		4.630E-05	4.630E-05	4.630E-05	4.630E-05		4.630E-05	4.630E-05	4.630E-05	4.630E-05		4.630E-05	4.630E-05	4.630E-05	4.630E-05
15	**[5,6]Elemental Deposition Velocity 96-275hrs (m/sec)**		7.945E-05	7.945E-05	7.945E-05	7.945E-05		7.945E-05	7.945E-05	7.945E-05	7.945E-05		7.945E-05	7.945E-05	7.945E-05	7.945E-05
16	**[5,6]Elemental Deposition Velocity 275-720hrs (m/sec)**		7.945E-05	7.945E-05	7.945E-05	7.945E-05		7.945E-05	7.945E-05	7.945E-05	7.945E-05		7.945E-05	7.945E-05	7.945E-05	7.945E-05
17	**Elemental Deposition Velocity 0-24hrs (ft/sec)**		1.829E-05	1.829E-05	1.829E-05	1.829E-05		1.829E-05	1.829E-05	1.829E-05	1.829E-05		1.829E-05	1.829E-05	1.829E-05	1.829E-05
18	**Elemental Deposition Velocity 24-48hrs (ft/sec)**		4.095E-05	4.095E-05	4.095E-05	4.095E-05		4.095E-05	4.095E-05	4.095E-05	4.095E-05		4.095E-05	4.095E-05	4.095E-05	4.095E-05
19	**Elemental Deposition Velocity 48-72hrs (ft/sec)**		9.503E-05	9.503E-05	9.503E-05	9.503E-05		9.503E-05	9.503E-05	9.503E-05	9.503E-05		9.503E-05	9.503E-05	9.503E-05	9.503E-05
20	**Elemental Deposition Velocity 72-96hrs (ft/sec)**		1.519E-04	1.519E-04	1.519E-04	1.519E-04		1.519E-04	1.519E-04	1.519E-04	1.519E-04		1.519E-04	1.519E-04	1.519E-04	1.519E-04
21	**Elemental Deposition Velocity 96-275hrs (ft/sec)**		2.607E-04	2.607E-04	2.607E-04	2.607E-04		2.607E-04	2.607E-04	2.607E-04	2.607E-04		2.607E-04	2.607E-04	2.607E-04	2.607E-04
22	**Elemental Deposition Velocity 275-720hrs (ft/sec)**		2.607E-04	2.607E-04	2.607E-04	2.607E-04		2.607E-04	2.607E-04	2.607E-04	2.607E-04		2.607E-04	2.607E-04	2.607E-04	2.607E-04
23	**[5,6]Organic Deposition Velocity 0-24hrs (m/sec)**		6.208E-09	6.208E-09	6.208E-09	6.208E-09		6.208E-09	6.208E-09	6.208E-09	6.208E-09		6.208E-09	6.208E-09	6.208E-09	6.208E-09
24	**[5,6]Organic Deposition Velocity 24-48hrs (m/sec)**		1.390E-08	1.390E-08	1.390E-08	1.390E-08		1.390E-08	1.390E-08	1.390E-08	1.390E-08		1.390E-08	1.390E-08	1.390E-08	1.390E-08
25	**[5,6]Organic Deposition Velocity 48-72hrs (m/sec)**		3.226E-08	3.226E-08	3.226E-08	3.226E-08		3.226E-08	3.226E-08	3.226E-08	3.226E-08		3.226E-08	3.226E-08	3.226E-08	3.226E-08
26	**[5,6]Organic Deposition Velocity 72-96hrs (m/sec)**		5.156E-08	5.156E-08	5.156E-08	5.156E-08		5.156E-08	5.156E-08	5.156E-08	5.156E-08		5.156E-08	5.156E-08	5.156E-08	5.156E-08
27	**[5,6]Organic Deposition Velocity 96-275hrs (m/sec)**		8.849E-08	8.849E-08	8.849E-08	8.849E-08		8.849E-08	8.849E-08	8.849E-08	8.849E-08		8.849E-08	8.849E-08	8.849E-08	8.849E-08
28	**[5,6]Organic Deposition Velocity 275-720hrs (m/sec)**		8.849E-08	8.849E-08	8.849E-08	8.849E-08		8.849E-08	8.849E-08	8.849E-08	8.849E-08		8.849E-08	8.849E-08	8.849E-08	8.849E-08
29	**Organic Deposition Velocity 0-24hrs (ft/sec)**		2.037E-08	2.037E-08	2.037E-08	2.037E-08		2.037E-08	2.037E-08	2.037E-08	2.037E-08		2.037E-08	2.037E-08	2.037E-08	2.037E-08
30	**Organic Deposition Velocity 24-48hrs (ft/sec)**		4.561E-08	4.561E-08	4.561E-08	4.561E-08		4.561E-08	4.561E-08	4.561E-08	4.561E-08		4.561E-08	4.561E-08	4.561E-08	4.561E-08
31	**Organic Deposition Velocity 48-72hrs (ft/sec)**		1.058E-07	1.058E-07	1.058E-07	1.058E-07		1.058E-07	1.058E-07	1.058E-07	1.058E-07		1.058E-07	1.058E-07	1.058E-07	1.058E-07
32	**Organic Deposition Velocity 72-96hrs (ft/sec)**		1.692E-07	1.692E-07	1.692E-07	1.692E-07		1.692E-07	1.692E-07	1.692E-07	1.692E-07		1.692E-07	1.692E-07	1.692E-07	1.692E-07
110	**[10]Peak P_a Containment Pressure, constant (psig)**	11.4														
111	**Atmospheric Pressure, constant (psia)**	14.7														
112	**[13]Extrapolation Factor, constant**	1.00														
113																
114																
115																
116																

	A	B	I	J
1			**Decontamination Factors Due to Iodine Deposition**	
2				
3			**netration B**	**Penetration C**
4	**rea (ft²)**		='MS Pi9	='MS Piping Summary'!C49
5	**ume (ft³)**		='MS P0	='MS Piping Summary'!C50
6	**rea (ft²)**		='MS Pi6	='MS Piping Summary'!C36
7	**rea (ft²)**		=C$6/2	=J$6/2
8	**ume (ft³)**		='MS Pi7	='MS Piping Summary'!C37
9	**ity (m/s)**		0.00117	0.00117
10	**ity (ft/s)**		=C$9/0.	=J$9/0.3048
11	**(m/sec)**		=EXP(((100	=EXP((2809/$B$89)-12.5)/100
12	**(m/sec)**		=EXP(((100	=EXP((2809/$B$91)-12.5)/100
13	**(m/sec)**		=EXP(((100	=EXP((2809/$B$93)-12.5)/100
14	**(m/sec)**		=EXP(((100	=EXP((2809/$B$95)-12.5)/100
15	**(m/sec)**		=EXP(((100	=EXP((2809/$B$97)-12.5)/100
16	**(m/sec)**		=EXP(((100	=EXP((2809/$B$99)-12.5)/100
17	**) (ft/sec)**		=C11/0.	=J11/0.3048
18	**) (ft/sec)**		=C12/0.	=J12/0.3048
19	**) (ft/sec)**		=C13/0.	=J13/0.3048
20	**) (ft/sec)**		=C14/0.	=J14/0.3048
21	**) (ft/sec)**		=C15/0.	=J15/0.3048
22	**) (ft/sec)**		=C16/0.	=J16/0.3048
23	**(m/sec)**		=EXP(((100	=EXP((2809/$B$89)-19.3)/100
24	**(m/sec)**		=EXP(((100	=EXP((2809/$B$91)-19.3)/100
25	**(m/sec)**		=EXP(((100	=EXP((2809/$B$93)-19.3)/100
26	**(m/sec)**		=EXP(((100	=EXP((2809/$B$95)-19.3)/100
27	**(m/sec)**		=EXP(((100	=EXP((2809/$B$97)-19.3)/100
28	**(m/sec)**		=EXP(((100	=EXP((2809/$B$99)-19.3)/100
29	**) (ft/sec)**		=C23/0.	=J23/0.3048
30	**) (ft/sec)**		=C24/0.	=J24/0.3048
31	**) (ft/sec)**		=C25/0.	=J25/0.3048
32	**) (ft/sec)**		=C26/0.	=J26/0.3048
33	**) (ft/sec)**		=C27/0.	=J27/0.3048
34	**) (ft/sec)**		=C28/0.	=J28/0.3048
35	**e (scfh)**		='BWRection'!B45	='BWROG Leak Rate Correction'!C45
36	**rs (cfm)**		='BWR N/A	N/A
37	**rs (cfm)**		=C$36* N/A	N/A
38	**rs (cfm)**		=C$36* N/A	N/A
39	**rs (cfm)**		=C$36* N/A	N/A
40	**rs (cfm)**		=C$36* N/A	N/A
41	**rs (cfm)**		=C$36* N/A	N/A
42	**rs (cfm)**		='BWR 60)/($B$102+460)))/60)*$B104	=((J$35*$B$112*(($B88+460)/($B$102+460)))/60)*$B104
43	**rs (cfm)**		=C$42 60)/($B$102+460)))/60)*$B105	=((J$35*$B$112*(($B90+460)/($B$102+460)))/60)*$B105
44	**rs (cfm)**		=C$42 60)/($B$102+460)))/60)*$B106	=((J$35*$B$112*(($B92+460)/($B$102+460)))/60)*$B106
45	**rs (cfm)**		=C$42 60)/($B$102+460)))/60)*$B107	=((J$35*$B$112*(($B94+460)/($B$102+460)))/60)*$B107
46	**rs (cfm)**		=C$42 60)/($B$102+460)))/60)*$B108	=((J$35*$B$112*(($B96+460)/($B$102+460)))/60)*$B108
47	**rs (cfm)**		=C$42 60)/($B$102+460)))/60)*$B109	=((J$35*$B$112*(($B98+460)/($B$102+460)))/60)*$B109
48	**hrs (cfh)**		=C42*6	=J42*60
49	**hrs (cfh)**		=C43*6	=J43*60
50	**hrs (cfh)**		=C44*6	=J44*60
51	**hrs (cfh)**		=C45*6	=J45*60
52	**hrs (cfh)**		=C46*6	=J46*60
53	**hrs (cfh)**		=C47*6	=J47*60
54				
55	**nt (hr⁻¹)**		=((C$1	=((J$10*J$7)/J$8)*3600
56	**3hr (hr⁻¹)**		=((C17	=((J17*J$4)/J$5)*3600
57	**3hr (hr⁻¹)**		=((C18	=((J18*J$4)/J$5)*3600
58	**2hr (hr⁻¹)**		=((C19	=((J19*J$4)/J$5)*3600
59	**5hr (hr⁻¹)**		=((C20	=((J20*J$4)/J$5)*3600
60	**5hr (hr⁻¹)**		=((C21	=((J21*J$4)/J$5)*3600
61	**0hr (hr⁻¹)**		=((C22	=((J22*J$4)/J$5)*3600
62	**4hr (hr⁻¹)**		=((C29	=((J29*J$4)/J$5)*3600
63	**3hr (hr⁻¹)**		=((C30	=((J30*J$4)/J$5)*3600
64	**2hr (hr⁻¹)**		=((C31	=((J31*J$4)/J$5)*3600
65	**5hr (hr⁻¹)**		=((C32	=((J32*J$4)/J$5)*3600
66	**5hr (hr⁻¹)**		=((C33	=((J33*J$4)/J$5)*3600
67	**0hr (hr⁻¹)**		=((C34	=((J34*J$4)/J$5)*3600
68				
69	**-24 hrs**		=IF(C$5*I$8)/I48))))	=IF(J$35=0,0,1-(1/(1+((J$55*J$8)/J48))))
70	**-48 hrs**		=IF(C$5*I$8)/I49))))	=IF(J$35=0,0,1-(1/(1+((J$55*J$8)/J49))))
71	**-72 hrs**		=IF(C$5*I$8)/I50))))	=IF(J$35=0,0,1-(1/(1+((J$55*J$8)/J50))))
72	**-96 hrs**		=IF(C$5*I$8)/I51))))	=IF(J$35=0,0,1-(1/(1+((J$55*J$8)/J51))))
73	**275 hrs**		=IF(C$5*I$8)/I52))))	=IF(J$35=0,0,1-(1/(1+((J$55*J$8)/J52))))
74	**720 hrs**		=IF(C$5*I$8)/I53))))	=IF(J$35=0,0,1-(1/(1+((J$55*J$8)/J53))))
75	**-24 hrs**		=IF(C$*I$5)/I48))))	=IF(J$35=0,0,1-(1/(1+((J56*J$5)/J48))))
76	**-48 hrs**		=IF(C$*I$5)/I49))))	=IF(J$35=0,0,1-(1/(1+((J57*J$5)/J49))))
77	**-72 hrs**		=IF(C$*I$5)/I50))))	=IF(J$35=0,0,1-(1/(1+((J58*J$5)/J50))))
78	**-96 hrs**		=IF(C$*I$5)/I51))))	=IF(J$35=0,0,1-(1/(1+((J59*J$5)/J51))))
79	**275 hrs**		=IF(C$*I$5)/I52))))	=IF(J$35=0,0,1-(1/(1+((J60*J$5)/J52))))
80	**720 hrs**		=IF(C$*I$5)/I53))))	=IF(J$35=0,0,1-(1/(1+((J61*J$5)/J53))))
81	**-24 hrs**		=IF(C$*I$5)/I48))))	=IF(J$35=0,0,1-(1/(1+((J62*J$5)/J48))))
82	**-48 hrs**		=IF(C$*I$5)/I49))))	=IF(J$35=0,0,1-(1/(1+((J63*J$5)/J49))))
83	**-72 hrs**		=IF(C$*I$5)/I50))))	=IF(J$35=0,0,1-(1/(1+((J64*J$5)/J50))))
84	**-96 hrs**		=IF(C$*I$5)/I51))))	=IF(J$35=0,0,1-(1/(1+((J65*J$5)/J51))))
85	**275 hrs**		=IF(C$*I$5)/I52))))	=IF(J$35=0,0,1-(1/(1+((J66*J$5)/J52))))
86	**720 hrs**		=IF(C$*I$5)/I53))))	=IF(J$35=0,0,1-(1/(1+((J67*J$5)/J53))))
87				
88	**-24hr (F)**	='BWROG Leak Rate Correction'!A5		
89	**24hr (K)**	=(B88-32)*(5/9)+273.15		
90	**-48hr (F)**	='BWROG Leak Rate Correction'!A6		
91	**48hr (K)**	=(B90-32)*(5/9)+273.15		
92	**-72hr (F)**	='BWROG Leak Rate Correction'!A7		
93	**72hr (K)**	=(B92-32)*(5/9)+273.15		
94	**-96hr (F)**	='BWROG Leak Rate Correction'!A8		
95	**96hr (K)**	=(B94-32)*(5/9)+273.15		
96	**275hr (F)**	='BWROG Leak Rate Correction'!A9		
97	**75hr (K)**	=(B96-32)*(5/9)+273.15		
98	**720hr (F)**	='BWROG Leak Rate Correction'!A10		
99	**20hr (K)**	=(B98-32)*(5/9)+273.15		
100	**stant (F)**	Not Credited		
101	**stant (K)**	=IF(B100="Not Credited", "Not Credited", (B100-32)*(5/9)+273.15)		
102	**stant (F)**	='BWROG Leak Rate Correction'!A4		
103	**nt (psig)**	9		
104	**r, 0-24hr**	1		
105	**24-48hr**	0.636		
106	**48-72hr**	0.636		
107	**72-96hr**	0.636		
108	**96-275hr**	0.636		
109	**75-720hr**	0.636		
110	**nt (psig)**	11.4		
111	**nt (psia)**	='BWROG Leak Rate Correction'!A11		
112	**onstant**	1		

1	
2	
3	
4	='MS Pipin
5	='MS Pipin
6	='MS Pipin
7	=K$6/2
8	='MS Pipin
9	0.00117
10	=K$9/0.30
11	=EXP((280
12	=EXP((280
13	=EXP((280
14	=EXP((280
15	=EXP((280
16	=EXP((280
17	=K11/0.30
18	=K12/0.30
19	=K13/0.30
20	=K14/0.30
21	=K15/0.30
22	=K16/0.30
23	=EXP((280
24	=EXP((280
25	=EXP((280
26	=EXP((280
27	=EXP((280
28	=EXP((280
29	=K23/0.30
30	=K24/0.30
31	=K25/0.30
32	=K26/0.30
33	=K27/0.30
34	=K28/0.30
35	='BWROG
36	
37	
38	
39	
40	
41	
42	=((K$35*$D))/60)*$B104
43	=((K$35*$D))/60)*$B105
44	=((K$35*$D))/60)*$B106
45	=((K$35*$D))/60)*$B107
46	=((K$35*$D))/60)*$B108
47	=((K$35*$D))/60)*$B109
48	=K42*60
49	=K43*60
50	=K44*60
51	=K45*60
52	=K46*60
53	=K47*60
54	
55	=((K$10*K
56	=((K17*K$
57	=((K18*K$
58	=((K19*K$
59	=((K20*K$
60	=((K21*K$
61	=((K22*K$
62	=((K29*K$
63	=((K30*K$
64	=((K31*K$
65	=((K32*K$
66	=((K33*K$
67	=((K34*K$
68	
69	=IF(K$35=
70	=IF(K$35=
71	=IF(K$35=
72	=IF(K$35=
73	=IF(K$35=
74	=IF(K$35=
75	=IF(K$35=
76	=IF(K$35=
77	=IF(K$35=
78	=IF(K$35=
79	=IF(K$35=
80	=IF(K$35=
81	=IF(K$35=
82	=IF(K$35=
83	=IF(K$35=
84	=IF(K$35=
85	=IF(K$35=
86	=IF(K$35=
87	
88	
89	
90	
91	
92	
93	
94	
95	
96	
97	
98	
99	
100	
101	
102	
103	
104	
105	
106	
107	
108	
109	
110	
111	
112	

Determination of Inboard MSIV Leak Rates using NEDC-31858P and NEDC-32091 Methodology

Constants			
68	Standard Temperature (^oF)		
550	Main Steam Pipe Wall Temp 0-24 hours (^oF)		
410	Main Steam Pipe Wall Temp 24-48 hours (^oF)		
300	Main Steam Pipe Wall Temp 48-72 hours (^oF)		
250	Main Steam Pipe Wall Temp 72-96 hours (^oF)		
200	Main Steam Pipe Wall Temp 96-275 hours (^oF)		
200	Main Steam Pipe Wall Temp 275-720 hours (^oF)		
14.7	Conversion Factor (atm to psi)		
Containment Volumes			
208,204	Drywell Volume (ft^3)	{CPS Value; UFSAR Table 6.2-52}	
1,512,341	Wetwell Volume (ft^3)	{CPS Value; UFSAR Table 6.2-52}	
14,000	Reactor Vessel (ft3) space above nominal water level {from GE 14,000 ft^3 value assumption}		
1,734,545	Total Volume (ft^3)		
49,117.11	Total Volume (m^3)		
7.8061	Ratio of Total Volume to Drywell Volume including RPV		
Containment Temperatures and Pressures per Containment Analysis for RSLB in PM-1061, R0			
233	DW Temp (^oF) at minimum DW-WW differential (at ~ 69 seconds)	{CPS Value; Figure 5.6}	
146	WW Temp (^oF) at minimum DW-WW differential (at ~ 69 seconds)	{CPS Value; Figure 5.6}	
157.1	Average Bulk Temperature (^oF)		
22	DW Pressure (psia) {use for pressure vessel as well}	{CPS Value; Figure 5.5}	
17.8	WW Pressure (psia)	{CPS Value; Figure 5.5}	
18.3	Average Bulk Pressure (psia)		
1.25	Average Bulk Pressure (atmospheres)		
Hydrogen Contribution from Zirconium Water Reaction			
624	assemblies	{CPS Value; UFSAR Section 1.1.5}	
95.16	lbs Zr/assembly	{Calculated CPS Value}	
7.87	cubic feet H_2 per lb Zr	{NEDC-31858P}	
0.00945	fraction of Zr undergoing metal water reaction	{CPS Value; UFSAR Table 6.2-52}	
4416.1797	Total Hydrogen (ft^3)	{Calculated CPS Value}	
5539.4793	Corrected to bulk average temperature	{Calculated CPS Value}	
0.0031936	Partial Pressure of Hydrogen (atmospheres)	{Calculated CPS Value}	
1.25	**Total {H_2, N_2, H_2O} Pressure (atmospheres)**	{Calculated CPS Value}	

Inboard Leak Rate Determination per NEDC-32091, Section B.1.3, Duane Arnold Example based.

A	B	C	D	
100	**100**	**0**	**50**	**Containment Leak Rate (scfh) {use as basis for outboard flow rate}**
0.1293103	**0.12931**	**0.0000**	**0.0647**	**Leak Rate in %/day**
1.5576	**1.5576**	**0.0000**	**0.7788**	**Inboard Leak Flow Rate (cfm)**
93.4560	**93.4560**	**0.0000**	**46.7280**	**Inboard Leak Flow Rate (cfh)**

Note that no extrapolation from test pressure to Pa is required based on the NEDC-31858P note that these containment conditions are essentially equivalent to test conditions.

	A	B	C	D	E	F	G
1	**MSIV Leak Rates using NEDC-31858P and N**						
2							
3	**Constants**						
4	68	Standard Temperature (°F)					
5	550	Main Steam Pipe Wall Temp 0-24 hours (°F)					
6	410	Main Steam Pipe Wall Temp 24-48 hours (°F)					
7	300	Main Steam Pipe Wall Temp 48-72 hours (°F)					
8	250	Main Steam Pipe Wall Temp 72-96 hours (°F)					
9	200	Main Steam Pipe Wall Temp 96-275 hours (°F)					
10	200	Main Steam Pipe Wall Temp 275-720 hours (°F)					
11	14.7	Conversion Factor (atm to psi)					
12							
13	**Containment Volumes**						
14	208204	Drywell Volume (ft^3)					{CPS V
15	1512341	Wetwell Volume (ft^3)					{CPS V
16	14000	Reactor Vessel (ft3) space above nominal water level {fro					
17	=SUM(A14:A16)	Total Volume (ft^3)					
18	=A17*0.028317	Total Volume (m^3)					
19	=A17/(A14+A16)	Ratio of Total Volume to Drywell Volume including RPV					
20							
21	**Containment Temperatures and Pressures per Contai**						
22							
23	233	DW Temp (°F) at minimum DW-WW differential (at ~ 69 s					{CPS V
24	146	WW Temp (°F) at minimum DW-WW differential (at ~ 69					{CPS V
25	=(A23*(A14+A16)+A24*A15)/A17	Average Bulk Temperature (°F)					
26							
27	22	DW Pressure (psia) {use for pressure vessel as well}					{CPS V
28	17.8	WW Pressure (psia)					{CPS V
29	=(A27*(A14+A16)+A28*A15)/A17	Average Bulk Pressure (psia)					
30	=A29/$A$11	Average Bulk Pressure (atmospheres)					
31							
32	**Hydrogen Contribution from Zirconium Water Reactio**						
33	624	assemblies					{CPS V
34	=59380/624	lbs Zr/assembly					{Calcula
35	7.87	cubic feet H_2 per lb Zr					{NEDC-
36	0.00945	fraction of Zr undergoing metal water reaction					{CPS V
37	=A33*A34*A35*A36	Total Hydrogen (ft^3)					{Calcula
38	=A37*(460+A25)/(460+32)	Corrected to bulk average temperature					{Calcula
39	=A38/A17	Partial Pressure of Hydrogen (atmospheres)					{Calcula
40							
41	**=A39+A30**	**Total {H_2, N_2, H_2O} Pressure (atmospheres)**					{Calcula
42							
43	**Inboard Leak Rate Determination per NEDC-32091, Se**						
44	**A**	**B**	**C**	**D**			
45	**100**	**100**	**0**	**50**	**Containment Leak Ra**		
46	**=A45*24*100/($A$17*$A$41*(460+$A$4)/(460+$A$25))**	**=B45*24*100/($A$17*$A$41*(460+$A$4)/(460+$A$25))**	**=C45*24*100/($A$17*$A$41*(460+$A$4)/(460+$A$25))**	**=D45*24*100/($A$17*$A$41*(460+$A$4)/(460+$A$25))**	**Leak Rate in %/day**		
47	**=A46*$A$17/1440/100**	**=B46*$A$17/1440/100**	**=C46*$A$17/1440/100**	**=D46*$A$17/1440/100**	**Inboard Leak Flow Ra**		
48	**=A47*60**	**=B47*60**	**=C47*60**	**=D47*60**	**Inboard Leak Flow Ra**		
49							
50	**Note that no extrapolation from test pressure to Pa is required based on the NEDC-31858P note that these containment conditions are essentially equivalent to test conditions.**						

	A	B	C	D	E
1	**CPS Main Steam Piping Summary**				
2	**22.624**	Main Steam 24 inch pipe ID			
3					
4					
5	**TOTAL MS PIPING**				
6	**A**	**B**	**C**	**D**	
7	1826.98	1954.91	1954.91	1826.98	24 inch piping, etc from vessel nozzle to discharge middle of reducing elbow (inches)
8	**902**	**965**	**965**	**902**	24 inch piping inside surface area (sq. ft.)
9	**425**	**455**	**455**	**425**	24 inch piping inside volume (cu. ft.)
10	**902**	**965**	**965**	**902**	Total inside surface area (sq. ft.)
11	**425**	**455**	**455**	**425**	Total inside volume (cu. ft.)
12					
13	**HORIZONTAL MS PIPING ONLY**				
14	**A**	**B**	**C**	**D**	
15	1520.6	1648.53	1648.53	1520.6	24 inch piping, etc from vessel nozzle to discharge middle of reducing elbow (inches)
16	**751**	**814**	**814**	**751**	24 inch piping inside surface area (sq. ft.)
17	**354**	**384**	**384**	**354**	24 inch piping inside volume (cu. ft.)
18					
19					
20	**751**	**814**	**814**	**751**	Total inside surface area (sq. ft.)
21	**354**	**384**	**384**	**354**	Total inside volume (cu. ft.)
22					
23	**100**	**50**	**50**	**100**	**Flow rate (scfh)**
24					
25					
26	152.2	162.9	162.9	152.2	feet of pipe, total
27	126.7	137.4	137.4	126.7	feet of pipe, horizontal
28					
29					
30	**Nodalization (Horizontals)**				
31					
32	370.6000	498.5300	498.5300	370.6000	**Node 1 Length (inches)**
33	183	246	246	183	**Node 1 Surface Area (sq. ft.)**
34	86	116	116	86	**Node 1 Volume (cu. ft.)**
35	648.0000	648.0000	648.0000	648.0000	**Node 2 Length (inches)**
36	320	320	320	320	**Node 2 Surface Area (sq. ft.)**
37	151	151	151	151	**Node 2 Volume (cu. ft.)**
38	502.0000	502.0000	502.0000	502.0000	**Node 3 Length (inches)**
39	248	248	248	248	**Node 3 Surface Area (sq. ft.)**
40	117	117	117	117	**Node 3 Volume (cu. ft.)**
41					
42					
43	**Nodalization (Totals)**				
44					
45	676.9800	804.9100	804.9100	676.9800	**Node 1 Length (inches)**
46	334	397	397	334	**Node 1 Surface Area (sq. ft.)**
47	157	187	187	157	**Node 1 Volume (cu. ft.)**
48	648.0000	648.0000	648.0000	648.0000	**Node 2 Length (inches)**
49	320	320	320	320	**Node 2 Surface Area (sq. ft.)**
50	151	151	151	151	**Node 2 Volume (cu. ft.)**
51	502.0000	502.0000	502.0000	502.0000	**Node 3 Length (inches)**
52	248	248	248	248	**Node 3 Surface Area (sq. ft.)**
53	117	117	117	117	**Node 3 Volume (cu. ft.)**

	A	B	C	D	E	F	G
1	**NOZZLE No**	**DWG No**	**PIPE DIA**	**LENGTH (IN)**	**COMMENTS**		
2	**TIE-IN**						
3	N3A-A1	762E902	24"				
4				68.500	HORZ PIPE LENGTH OUT OF REACTOR		
5				306.380	VERT PIPE LENGTH		
6				302.100	HORZ PIPE FROM VERT PIPE TO INBOARD VALVE		
7				648.000	INBOARD VALVE TO OUTBOARD VALVE		
8			SubTotal	1324.980	Includes lower drywell vert run; inboard MSIV; Penetration piping; & outboard MSIV		
9							
10		MO1-1109	24"	502.000	HORZ PIPE LENGTH FROM OUTBOARD VALVE TO TURBINE BLDG.		
11							
12			SubTotal	502.000	Other drywell MS piping and fittings dimensions from iso details		
13							
14						Vertical	**Horizontal**
15				**TOTAL**		Segments	**Only**
16				1826.980	Total Inches	306.380	**1520.600**
17				152.248	Total Feet	25.532	**126.717**
18							
19							
20		**INBOARD**					
21			Horizontal	370.600	Inches		
22			Total	676.980	Inches		
23				56.415	Feet		
24							
25		**PENETRATION**				**This Line is assumed**	
26			Horizontal	648.000	Inches	**to have the worst-case**	
27			Total	648.000	Inches	**failed Penetration**	
28				54.000	Feet	**MSIV.**	
29							
30		**OUTBOARD**					
31			Horizontal	502.000	Inches		
32			Total	502.000	Inches		
33				41.833	Feet		

	A	B	C	D	E	F	G	H	I	J	K
1	**NOZZLE No**	**DWG No**	**PIPE DIA**	**LENGTH (IN)**	**COMMENTS**						
2	**TIE-IN**										
3	N3B-B1	762E902	24"								
4				68.500	HORZ PIPE LENGTH OUT OF REACTOR						
5				306.380	VERT PIPE LENGTH						
6				430.030	HORZ PIPE FROM VERT PIPE TO INBOARD VALVE						
7				648.000	INBOARD VALVE TO OUTBOARD VALVE						
8			SubTotal	1452.910	Includes lower drywell vert run; inboard MSIV; Penetration piping; & outboard MSIV						
9											
10		MO1-1109	24"	502.000	HORZ PIPE LENGTH FROM OUTBOARD VALVE TO TURBINE BLDG.						
11											
12			SubTotal	502.000							
13											
14						Vertical	**Horizontal**				
15				**TOTAL**		Segments	**Only**				
16				1954.910	Total Inches	306.380	**1648.530**				
17				162.909	Total Feet	25.53166667	**137.378**				
18											
19											
20		**INBOARD**									
21			Horizontal	498.530	Inches						
22			Total	804.910	Inches						
23				67.076	Feet						
24											
25		**PENETRATION**									
26			Horizontal	648.000	Inches						
27			Total	648.000	Inches						
28				54.000	Feet						
29											
30		**OUTBOARD**									
31			Horizontal	502.000	Inches						
32			Total	502.000	Inches						
33				41.833	Feet						

	A	B	C	D	E	F	G
1	**NOZZLE No**	**DWG No**	**PIPE DIA**	**LENGTH (IN)**	**COMMENTS**		
2	**TIE-IN**						
3	N3B-C1	762E902	24"				
4				68.500	HORZ PIPE LENGTH OUT OF REACTOR		
5				306.380	VERT PIPE LENGTH		
6				430.030	HORZ PIPE FROM VERT PIPE TO INBOARD VALVE		
7				648.000	INBOARD VALVE TO OUTBOARD VALVE		
8			SubTotal	1452.910			
9							
10		MO1-1109	24"	502.000	HORZ PIPE LENGTH FROM OUTBOARD VALVE TO TURBINE BLDG.		
11							
12			SubTotal	502.000	Other drywell MS piping and fittings dimensions from iso details		
13							
14						Vertical	**Horizontal**
15				**TOTAL**		Segments	**Only**
16				1954.910	Total Inches	306.380	**1648.530**
17				162.909	Total Feet	25.532	**137.378**
18							
19							
20		**INBOARD**					
21			Horizontal	498.530	Inches		
22			Total	804.910	Inches		
23				67.076	Feet		
24							
25		**PENETRATION**					
26			Horizontal	648.000	Inches		
27			Total	648.000	Inches		
28				54.000	Feet		
29							
30		**OUTBOARD**					
31			Horizontal	502.000	Inches		
32			Total	502.000	Inches		
33				41.833	Feet		

	A	B	C	D	E	F	G	H
1	**NOZZLE No**	**DWG No**	**PIPE DIA**	**LENGTH (IN)**	**COMMENTS**			
2	**TIE-IN**							
3	N3D-D1	762E902	24"					
4				68.500	HORZ PIPE LENGTH OUT OF REACTOR			
5				306.380	VERT PIPE LENGTH			
6				302.100	HORZ PIPE FROM VERT PIPE TO INBOARD VALVE			
7				648.000	INBOARD VALVE TO OUTBOARD VALVE			
8			SubTotal	1324.980	Includes lower drywell vert run; inboard MSIV; Penetration piping; & outboard MSIV			
9								
10		MO1-1109	24"	502.000	HORZ PIPE LENGTH FROM OUTBOARD VALVE TO TURBINE BLDG.			
11								
12			SubTotal	502.000	Other drywell MS piping and fittings dimensions from iso details			
13								
14						Vertical	**Horizontal**	
15				**TOTAL**		Segments	**Only**	
16				1826.980	Total Inches	306.380	**1520.600**	
17				152.248	Total Feet	25.532	**126.717**	
18								
19								
20		**INBOARD**						
21			Horizontal	370.600	Inches			
22			Total	676.980	Inches			
23				56.415	Feet			
24								
25		**PENETRATION**						
26			Horizontal	648.000	Inches			
27			Total	648.000	Inches			
28				54.000	Feet			
29								
30		**OUTBOARD**						
31			Horizontal	502.000	Inches			
32			Total	502.000	Inches			
33				41.833	Feet			

	A	B	C	D	E
1	**CPS Main Steam Piping Summary**				
2	**22.624**	Main Steam 24 inch pipe ID			
3					
4	**TOTAL MS PIPING**				
5	**A**	**B**	**C**	**D**	
6	=NozzN3A!D8+NozzN3A!D12	=NozzN3B!D8+NozzN3B!D12	=NozzN3C!D8+NozzN3C!D12	=NozzN3D!D8+NozzN3D!D12	24 inch piping, etc from vessel nozzle to discharge middle of reducing elbow (inches)
7	**=A6*PI()*$A$2/144**	**=B6*PI()*$A$2/144**	**=C6*PI()*$A$2/144**	**=D6*PI()*$A$2/144**	24 inch piping inside surface area (sq. ft.)
8	**=A6*PI()*($A$2/2)^2/1728**	**=B6*PI()*($A$2/2)^2/1728**	**=C6*PI()*($A$2/2)^2/1728**	**=D6*PI()*($A$2/2)^2/1728**	24 inch piping inside volume (cu. ft.)
9	**=A7**	**=B7**	**=C7**	**=D7**	Total inside surface area (sq. ft.)
10	**=A8**	**=B8**	**=C8**	**=D8**	Total inside volume (cu. ft.)
11					
12	**HORIZONTAL MS PIPING ONLY**				
13	**A**	**B**	**C**	**D**	
14	=A6-SUM(NozzN3A!D5)	=B6-SUM(NozzN3B!D5)	=C6-SUM(NozzN3C!D5)	=D6-SUM(NozzN3D!D5)	24 inch piping, etc from vessel nozzle to discharge middle of reducing elbow (inches)
15	**=A14*PI()*$A$2/144**	**=B14*PI()*$A$2/144**	**=C14*PI()*$A$2/144**	**=D14*PI()*$A$2/144**	24 inch piping inside surface area (sq. ft.)
16	**=A14*PI()*($A$2/2)^2/1728**	**=B14*PI()*($A$2/2)^2/1728**	**=C14*PI()*($A$2/2)^2/1728**	**=D14*PI()*($A$2/2)^2/1728**	24 inch piping inside volume (cu. ft.)
17					
18					
19	**=A15**	**=B15**	**=C15**	**=D15**	Total inside surface area (sq. ft.)
20	**=A16**	**=B16**	**=C16**	**=D16**	Total inside volume (cu. ft.)
21					
22	**100**	**100**	**100**	**100**	**Flow rate (scfh)**
23					
24					
25	=A6/12	=B6/12	=C6/12	=D6/12	feet of pipe, total
26	=A14/12	=B14/12	=C14/12	=D14/12	feet of pipe, horizontal
27					
28					
29					
30	**Nodalization (Horizontals)**				
31					
32	=NozzN3A!D21	=NozzN3B!D21	=NozzN3C!D21	=NozzN3D!D21	**Node 1 Length (inches)**
33	=A32*PI()*$A$2/144	=B32*PI()*$A$2/144	=C32*PI()*$A$2/144	=D32*PI()*$A$2/144	**Node 1 Surface Area (sq. ft.)**
34	=A32*PI()*($A$2/2)^2/1728	=B32*PI()*($A$2/2)^2/1728	=C32*PI()*($A$2/2)^2/1728	=D32*PI()*($A$2/2)^2/1728	**Node 1 Volume (cu. ft.)**
35	=NozzN3A!D26	=NozzN3B!D26	=NozzN3C!D26	=NozzN3D!D26	**Node 2 Length (inches)**
36	=A$35*PI()*$A$2/144	=B$35*PI()*$A$2/144	=C$35*PI()*$A$2/144	=D$35*PI()*$A$2/144	**Node 2 Surface Area (sq. ft.)**
37	=A35*PI()*($A$2/2)^2/1728	=B35*PI()*($A$2/2)^2/1728	=C35*PI()*($A$2/2)^2/1728	=D35*PI()*($A$2/2)^2/1728	**Node 2 Volume (cu. ft.)**
38	=NozzN3A!D31	=NozzN3B!D31	=NozzN3C!D31	=NozzN3D!D31	**Node 3 Length (inches)**
39	=A38*PI()*$A$2/144	=B38*PI()*$A$2/144	=C38*PI()*$A$2/144	=D38*PI()*$A$2/144	**Node 3 Surface Area (sq. ft.)**
40	=A38*PI()*($A$2/2)^2/1728	=B38*PI()*($A$2/2)^2/1728	=C38*PI()*($A$2/2)^2/1728	=D38*PI()*($A$2/2)^2/1728	**Node 3 Volume (cu. ft.)**
41					
42					
43	**Nodalization (Totals)**				
44					
45	=NozzN3A!D22	=NozzN3B!D22	=NozzN3C!D22	=NozzN3D!D22	**Node 1 Length (inches)**
46	=A45*PI()*$A$2/144	=B45*PI()*$A$2/144	=C45*PI()*$A$2/144	=D45*PI()*$A$2/144	**Node 1 Surface Area (sq. ft.)**
47	=A45*PI()*($A$2/2)^2/1728	=B45*PI()*($A$2/2)^2/1728	=C45*PI()*($A$2/2)^2/1728	=D45*PI()*($A$2/2)^2/1728	**Node 1 Volume (cu. ft.)**
48	=NozzN3A!D27	=NozzN3B!D27	=NozzN3C!D27	=NozzN3D!D27	**Node 2 Length (inches)**
49	=A48*PI()*$A$2/144	=B48*PI()*$A$2/144	=C48*PI()*$A$2/144	=D48*PI()*$A$2/144	**Node 2 Surface Area (sq. ft.)**
50	=A48*PI()*($A$2/2)^2/1728	=B48*PI()*($A$2/2)^2/1728	=C48*PI()*($A$2/2)^2/1728	=D48*PI()*($A$2/2)^2/1728	**Node 2 Volume (cu. ft.)**
51	=NozzN3A!D32	=NozzN3B!D32	=NozzN3C!D32	=NozzN3D!D32	**Node 3 Length (inches)**
52	=A51*PI()*$A$2/144	=B51*PI()*$A$2/144	=C51*PI()*$A$2/144	=D51*PI()*$A$2/144	**Node 3 Surface Area (sq. ft.)**
53	=A51*PI()*($A$2/2)^2/1728	=B51*PI()*($A$2/2)^2/1728	=C51*PI()*($A$2/2)^2/1728	=D51*PI()*($A$2/2)^2/1728	**Node 3 Volume (cu. ft.)**

	A	B	C	D	E	F	G
1	**NOZZLE No**	**DWG No**	**PIPE DIA**	**LENGTH (IN)**	**COMMENTS**		
2	**TIE-IN**						
3	N3A-A1	762E902	24"				
4				68.5	HORZ PIPE LENGTH OUT OF REACTOR		
5				306.38	VERT PIPE LENGTH		
6				302.1	HORZ PIPE FROM VERT PIPE TO INBOARD VALVE		
7				648	INBOARD VALVE TO OUTBOARD VALVE		
8			SubTotal	=SUM(D4:D7)	Includes lower drywell vert run; inboard MSIV; Penetration piping; & outboard MSIV		
9							
10		MO1-1109	24"	502	HORZ PIPE LENGTH FROM OUTBOARD VALVE TO TURBINE BLDG.		
11							
12			SubTotal	=SUM(D10)	Other drywell MS piping and fittings dimensions from iso details		
13							
14						Vertical	**Horizontal**
15				**TOTAL**		Segments	**Only**
16				=D8+D12	Total Inches	=D5	**=D16-F16**
17				=D16/12	Total Feet	=F16/12	**=D17-F17**
18							
19							
20		**INBOARD**					
21			Horizontal	=D4+D6	Inches		
22			Total	=D21+D5	Inches		
23				=D22/12	Feet		
24							
25		**PENETRATION**				**This Line is assumed to**	
26			Horizontal	=D7	Inches	**have the worst-case**	
27			Total	=D26	Inches	**failed Penetration MSIV.**	
28				=D27/12	Feet		
29							
30		**OUTBOARD**					
31			Horizontal	=D10	Inches		
32			Total	=D31	Inches		
33				=D32/12	Feet		

	A	B	C	D	E	F	G
1	**NOZZLE No**	**DWG No**	**PIPE DIA**	**LENGTH (IN)**	**COMMENTS**		
2	**TIE-IN**						
3	N3B-B1	762E902	24"				
4				68.5	HORZ PIPE LENGTH OUT OF REACTOR		
5				306.38	VERT PIPE LENGTH		
6				430.03	HORZ PIPE FROM VERT PIPE TO INBOARD VALVE		
7				648	INBOARD VALVE TO OUTBOARD VALVE		
8			SubTotal	=SUM(D4:D7)	Includes lower drywell vert run; inboard MSIV; Penetration piping; & outboard MSIV		
9							
10		MO1-1109	24"	502	HORZ PIPE LENGTH FROM OUTBOARD VALVE TO TURBINE BLDG.		
11							
12			SubTotal	=SUM(D10)			
13							
14						Vertical	**Horizontal**
15				**TOTAL**		Segments	**Only**
16				=D8+D12	Total Inches	=D5	**=D16-F16**
17				=D16/12	Total Feet	=F16/12	**=D17-F17**
18							
19							
20		**INBOARD**					
21			Horizontal	=D4+D6	Inches		
22			Total	=D21+D5	Inches		
23				=D22/12	Feet		
24							
25		**PENETRATION**					
26			Horizontal	=D7	Inches		
27			Total	=D26	Inches		
28				=D27/12	Feet		
29							
30		**OUTBOARD**					
31			Horizontal	=D10	Inches		
32			Total	=D31	Inches		
33				=D32/12	Feet		

	A	B	C	D	E	F	G
1	**NOZZLE No**	**DWG No**	**PIPE DIA**	**LENGTH (IN)**	**COMMENTS**		
2	**TIE-IN**						
3	N3B-C1	762E902	24"				
4				68.5	HORZ PIPE LENGTH OUT OF REACTOR		
5				306.38	VERT PIPE LENGTH		
6				430.03	HORZ PIPE FROM VERT PIPE TO INBOARD VALVE		
7				648	INBOARD VALVE TO OUTBOARD VALVE		
8			SubTotal	=SUM(D4:D7)			
9							
10		MO1-1109	24"	502	HORZ PIPE LENGTH FROM OUTBOARD VALVE TO TURBINE BLDG.		
11							
12			SubTotal	=SUM(D10)	Other drywell MS piping and fittings dimensions from iso details		
13							
14						Vertical	**Horizontal**
15				**TOTAL**		Segments	**Only**
16				=D8+D12	Total Inches	=D5	**=D16-F16**
17				=D16/12	Total Feet	=F16/12	**=D17-F17**
18							
19							
20		**INBOARD**					
21			Horizontal	=D4+D6	Inches		
22			Total	=D21+D5	Inches		
23				=D22/12	Feet		
24							
25		**PENETRATION**					
26			Horizontal	=D7	Inches		
27			Total	=D26	Inches		
28				=D27/12	Feet		
29							
30		**OUTBOARD**					
31			Horizontal	=D10	Inches		
32			Total	=D31	Inches		
33				=D32/12	Feet		

	A	B	C	D	E	F	G
1	**NOZZLE No**	**DWG No**	**PIPE DIA**	**LENGTH (IN)**	**COMMENTS**		
2	**TIE-IN**						
3	N3D-D1	762E902	24"				
4				68.5	HORZ PIPE LENGTH OUT OF REACTOR		
5				306.38	VERT PIPE LENGTH		
6				302.1	HORZ PIPE FROM VERT PIPE TO INBOARD VALVE		
7				648	INBOARD VALVE TO OUTBOARD VALVE		
8			SubTotal	=SUM(D4:D7)	Includes lower drywell vert run; inboard MSIV; Penetration piping; & outboard MSIV		
9							
10		MO1-1109	24"	502	HORZ PIPE LENGTH FROM OUTBOARD VALVE TO TURBINE BLDG.		
11							
12			SubTotal	=SUM(D10)	Other drywell MS piping and fittings dimensions from iso details		
13							
14						Vertical	**Horizontal**
15				**TOTAL**		Segments	**Only**
16				=D8+D12	Total Inches	=D5	**=D16-F16**
17				=D16/12	Total Feet	=F16/12	**=D17-F17**
18							
19							
20		**INBOARD**					
21			Horizontal	=D4+D6	Inches		
22			Total	=D21+D5	Inches		
23				=D22/12	Feet		
24							
25		**PENETRATION**					
26			Horizontal	=D7	Inches		
27			Total	=D26	Inches		
28				=D27/12	Feet		
29							
30		**OUTBOARD**					
31			Horizontal	=D10	Inches		
32			Total	=D31	Inches		
33				=D32/12	Feet		

APPENDIX B

Purge Piping Deposition Credit Spreadsheets

	A	B	C	D	E	F	G	H
1	**Determination of Purge Line Decontamination Factors Due to Iodine Deposition - Leak Rate @ 0.16scfm**							
2								
3			**Node 1**	**Node 1**		**Node 2 [1]**	**Node 2 [1]**	
4			**Inboard A**	**Inboard B**		**Outboard A**	**Outboard B**	
5	**Total Pipe Surface Area (ft^2)**		518	486		0	0	**From Piping Take-offs**
6	**Total Pipe Volume (ft^3)**		373	349		0	0	**From Piping Take-offs**
7	**Total Horizontal Pipe Surface Area (ft^2)**		518	459		0	0	**From Piping Take-offs**
8	**Horizontal Settling Pipe Surface Area (ft^2)**		259.25	229.45		0.00	0.00	**1/2 of the above Horizontal Surface Area**
9	**Horizontal Pipe Volume (ft^3)**		373	330		0	0	**From Piping Take-offs**
10	**Aerosol Settling Velocity (m/s)**		1.170E-03	1.170E-03		1.170E-03	1.170E-03	**From AEB-98-03, Page A-3, Median Value**
11	**Aerosol Settling Velocity (ft/s)**		3.839E-03	3.839E-03		3.839E-03	3.839E-03	**Unit Conversion**
12	**Elemental Settling Velocity (m/sec)**		7.414E-05	7.414E-05		7.414E-05	7.414E-05	**Cline, RADTRAD 3.03 manual (note unit conversion to meters)**
13	**Elemental Settling Velocity (ft/sec)**		2.433E-04	2.433E-04		2.433E-04	2.433E-04	**Unit Conversion**
14	**Organic Settling Velocity (m/sec)**		8.258E-08	8.258E-08		8.258E-08	8.258E-08	**Cline, RADTRAD 3.03 manual (note unit conversion to meters)**
15	**Organic Settling Velocity (ft/sec)**		2.709E-07	2.709E-07		2.709E-07	2.709E-07	**Unit Conversion**
16	**Uncorrected Flow Rate (scfm)**		0.16	0.16		0.00	0.00	**0.16scfm Leak Rate**
17	**From Containment Flow Rate 0-24 hrs (cfm)**		0.325	0.325		N/A	N/A	**Inboard Flow Corrected for Containment Pressure Conditions. - 50% Reduction at 24 hrs**
18	**From Containment Flow Rate 24-720 hrs (cfm)**		0.163	0.163		N/A	N/A	
19	**Flow Rate 0-24 hrs (cfm)**		0.325	0.325		0.000	0.000	**Inboard Flow Corrected for Containment Pressure Conditions. - 50% Reduction at 24 hrs**
20	**Flow Rate 24-720 hrs (cfm)**		0.163	0.163		0.000	0.000	
21	**Flow Rate 0-24 hrs (cfh)**		19.523	19.523		0.000	0.000	**Unit Conversion**
22	**Flow Rate 24-720 hrs (cfh)**		9.761	9.761		0.000	0.000	**Unit Conversion**
23								
24	**Aerosol Settling Rate Constant (hr^{-1})**		9.61E+00	9.61E+00		#DIV/0!	#DIV/0!	**From AEB-98-03, Page A-2, Formula 2**
25	**Elemental Settling Rate Constant (hr^{-1})**		1.22E+00	1.22E+00		#DIV/0!	#DIV/0!	**From AEB-98-03, Page A-2, Formula 2, but for Elemental**
26	**Organic Settling Rate Constant (hr^{-1})**		1.36E-03	1.36E-03		#DIV/0!	#DIV/0!	**From AEB-98-03, Page A-2, Formula 2, but for Organic**
27								
28	**Aerosol Filter Efficiency (0-24 hrs)**		99.46%	99.39%		0.00%	0.00%	**From AEB-98-03, Page A-2, Formula 4**
29	**Aerosol Filter Efficiency (24-720 hrs)**		99.73%	99.69%		0.00%	0.00%	**From AEB-98-03, Page A-2, Formula 4**
30	**Elemental Filter Efficiency (0-24 hrs)**		95.88%	95.61%		0.00%	0.00%	**From AEB-98-03, Page A-2, Formula 4**
31	**Elemental Filter Efficiency (24-720 hrs)**		97.90%	97.76%		0.00%	0.00%	**From AEB-98-03, Page A-2, Formula 4**
32	**Organic Filter Efficiency (0-24 hrs)**		2.52%	2.37%		0.00%	0.00%	**From AEB-98-03, Page A-2, Formula 4**
33	**Organic Filter Efficiency (24-720 hrs)**		4.93%	4.63%		0.00%	0.00%	**From AEB-98-03, Page A-2, Formula 4**
34								
35								Note:
36	**[2]Pipe Wall Temperature, constant (F)**	206.00						[1] Because of a failed valve assumption, deposition in only one Node is credited.
37	**Pipe Wall Temperature, constant (K)**	369.82						[2] Conservatively High Drywell Post-LOCA Min ECCS Temperature (USAR Fig.
38	**Containment Temperature, constant (F)**	68.00						6.2-7a) Applicable After Approx. 900 Seconds; No Reductions With Time
39	**Atmospheric Pressure, constant (psia)**	14.70						
40	**Clinton Purge IV Test Pressure, constant (psig)**	9.00						

	A	B	C	D
1	**Determination of Purge Line Decontamination Factors Due to lod**			
2				
3			**Node 1**	**Node 1**
4			**Inboard A**	**Inboard B**
5	**Total Pipe Surface Area (ft^2)**		='Drywell Purge Piping Summary'!B40	='Drywell Purge Piping Summary'!C40
6	**Total Pipe Volume (ft^3)**		='Drywell Purge Piping Summary'!B41	='Drywell Purge Piping Summary'!C41
7	**Total Horizontal Pipe Surface Area (ft^2)**		='Drywell Purge Piping Summary'!B30	='Drywell Purge Piping Summary'!C30
8	**Horizontal Settling Pipe Surface Area (ft^2)**		=C$7/2	=D$7/2
9	**Horizontal Pipe Volume (ft^3)**		='Drywell Purge Piping Summary'!B31	='Drywell Purge Piping Summary'!C31
10	**Aerosol Settling Velocity (m/s)**		0.00117	0.00117
11	**Aerosol Settling Velocity (ft/s)**		=C$10/0.3048	=D$10/0.3048
12	**Elemental Settling Velocity (m/sec)**		=EXP((2809/$B$37)-12.5)/100	=EXP((2809/$B$37)-12.5)/100
13	**Elemental Settling Velocity (ft/sec)**		=C$12/0.3048	=D$12/0.3048
14	**Organic Settling Velocity (m/sec)**		=EXP((2809/$B$37)-19.3)/100	=EXP((2809/$B$37)-19.3)/100
15	**Organic Settling Velocity (ft/sec)**		=C$14/0.3048	=D$14/0.3048
16	**Uncorrected Flow Rate (scfm)**		0.16	0.16
17	**From Containment Flow Rate 0-24 hrs (cfm)**		=$C16*(($B$39+$B$40)/$B$39)*($B$36+460)/($B$38+460)	=$C16*(($B$39+$B$40)/$B$39)*($B$36+460)/($B$38+460)
18	**From Containment Flow Rate 24-720 hrs (cfm)**		=C17/2	=D17/2
19	**Flow Rate 0-24 hrs (cfm)**		=$C16*(($B$39+$B$40)/$B$39)*($B$36+460)/($B$38+460)	=$C16*(($B$39+$B$40)/$B$39)*($B$36+460)/($B$38+460)
20	**Flow Rate 24-720 hrs (cfm)**		=C19/2	=D19/2
21	**Flow Rate 0-24 hrs (cfh)**		=C$19*60	=D$19*60
22	**Flow Rate 24-720 hrs (cfh)**		=C21/2	=D21/2
23				
24	**Aerosol Settling Rate Constant (hr^{-1})**		=((C$11*C$8)/C$9)*3600	=((D$11*D$8)/D$9)*3600
25	**Elemental Settling Rate Constant (hr^{-1})**		=((C$13*C$5)/C$6)*3600	=((D$13*D$5)/D$6)*3600
26	**Organic Settling Rate Constant (hr^{-1})**		=((C$15*C$5)/C$6)*3600	=((D$15*D$5)/D$6)*3600
27				
28	**Aerosol Filter Efficiency (0-24 hrs)**		=IF(C$16=0,0,1-(1/(1+((C$24*C$9)/C$21))))	=IF(D$16=0,0,1-(1/(1+((D$24*D$9)/D$21))))
29	**Aerosol Filter Efficiency (24-720 hrs)**		=IF(C$16=0,0,1-(1/(1+((C$24*C$9)/C$22))))	=IF(D$16=0,0,1-(1/(1+((D$24*D$9)/D$22))))
30	**Elemental Filter Efficiency (0-24 hrs)**		=IF(C$16=0,0,1-(1/(1+((C$25*C$6)/C$21))))	=IF(D$16=0,0,1-(1/(1+((D$25*D$6)/D$21))))
31	**Elemental Filter Efficiency (24-720 hrs)**		=IF(C$16=0,0,1-(1/(1+((C$25*C$6)/C$22))))	=IF(D$16=0,0,1-(1/(1+((D$25*D$6)/D$22))))
32	**Organic Filter Efficiency (0-24 hrs)**		=IF(C$16=0,0,1-(1/(1+((C$26*C$6)/C$21))))	=IF(D$16=0,0,1-(1/(1+((D$26*D$6)/D$21))))
33	**Organic Filter Efficiency (24-720 hrs)**		=IF(C$16=0,0,1-(1/(1+((C$26*C$6)/C$22))))	=IF(D$16=0,0,1-(1/(1+((D$26*D$6)/D$22))))
34				
35				
36	**[2]Pipe Wall Temperature, constant (F)**	206		
37	**Pipe Wall Temperature, constant (K)**	=(B36-32)*(5/9)		
38	**Containment Temperature, constant (F)**	68		
39	**Atmospheric Pressure, constant (psia)**	14.7		
40	**Clinton Purge IV Test Pressure, constant (psig)**	9		

	E	F	G	H
1	ine Deposition - Leak Rate @ 0.16scfm			
2				
3		Node 2 [1]	Node 2 [1]	
4		Outboard A	Outboard B	
5		='Drywell Purge Piping Summary'!B43	='Drywell Purge Piping Summary'!C43	From Piping Take-offs
6		='Drywell Purge Piping Summary'!B44	='Drywell Purge Piping Summary'!C44	From Piping Take-offs
7		='Drywell Purge Piping Summary'!B33	='Drywell Purge Piping Summary'!C33	From Piping Take-offs
8		=F$7/2	=G$7/2	1/2 of the above Horizontal Surface Area
9		='Drywell Purge Piping Summary'!B34	='Drywell Purge Piping Summary'!C34	From Piping Take-offs
10		0.00117	0.00117	From AEB-98-03, Page A-3, Median Value
11		=F$10/0.3048	=G$10/0.3048	Unit Conversion
12		=EXP((2809/$B$37)-12.5)/100	=EXP((2809/$B$37)-12.5)/100	Cline, RADTRAD 3.03 manual (note unit conversion to meters)
13		=F$12/0.3048	=G$12/0.3048	Unit Conversion
14		=EXP((2809/$B$37)-19.3)/100	=EXP((2809/$B$37)-19.3)/100	Cline, RADTRAD 3.03 manual (note unit conversion to meters)
15		=F$14/0.3048	=G$14/0.3048	Unit Conversion
16		0	0	0.16scfm Leak Rate
17		N/A	N/A	Inboard Flow Corrected for Containment Pressure Conditions. - 50% Reduction at 24 hrs
18		N/A	N/A	
19		=F16*(($B$36+460)/($B$38+460))	=G16*(($B$36+460)/($B$38+460))	Inboard Flow Corrected for Containment Pressure Conditions. - 50% Reduction at 24 hrs
20		=F19/2	=G19/2	
21		=F$19*60	=G$19*60	Unit Conversion
22		=F21/2	=G21/2	Unit Conversion
23				
24		=((F$11*F$8)/F$9)*3600	=((G$11*G$8)/G$9)*3600	From AEB-98-03, Page A-2, Formula 2
25		=((F$13*F$5)/F$6)*3600	=((G$13*G$5)/G$6)*3600	From AEB-98-03, Page A-2, Formula 2, but for Elemental
26		=((F$15*F$5)/F$6)*3600	=((G$15*G$5)/G$6)*3600	From AEB-98-03, Page A-2, Formula 2, but for Organic
27				
28		=IF(F$16=0,0,1-(1/(1+((F$24*F$9)/F$21))))	=IF(G$16=0,0,1-(1/(1+((G$24*G$9)/G$21))))	From AEB-98-03, Page A-2, Formula 4
29		=IF(F$16=0,0,1-(1/(1+((F$24*F$9)/F$22))))	=IF(G$16=0,0,1-(1/(1+((G$24*G$9)/G$22))))	From AEB-98-03, Page A-2, Formula 4
30		=IF(F$16=0,0,1-(1/(1+((F$25*F$6)/F$21))))	=IF(G$16=0,0,1-(1/(1+((G$25*G$6)/G$21))))	From AEB-98-03, Page A-2, Formula 4
31		=IF(F$16=0,0,1-(1/(1+((F$25*F$6)/F$22))))	=IF(G$16=0,0,1-(1/(1+((G$25*G$6)/G$22))))	From AEB-98-03, Page A-2, Formula 4
32		=IF(F$16=0,0,1-(1/(1+((F$26*F$6)/F$21))))	=IF(G$16=0,0,1-(1/(1+((G$26*G$6)/G$21))))	From AEB-98-03, Page A-2, Formula 4
33		=IF(F$16=0,0,1-(1/(1+((F$26*F$6)/F$22))))	=IF(G$16=0,0,1-(1/(1+((G$26*G$6)/G$22))))	From AEB-98-03, Page A-2, Formula 4
34				
35				Note:
36				[1] Because of a failed valve assumption, deposition in only one N
37				[2] Conservatively High Drywell Post-LOCA Min ECCS Temperatu
38				6.2-7a) Applicable After Approx. 900 Seconds; No Reductions
39				
40				

	A	B	C	D	E	F	G	H
1	**DryWell Purge Piping Summary**							
2	**34.5** DryWell Purge 36 inch pipe ID							
3								
4								
5	**TOTAL PIPING**							
6	**Containment Penet. No.**							
7		**101**	**102**					
8		**A**	**B**					
9		689	646		Segment 1 Length			
10		**518**	**486**		36 inch piping inside surface area (sq. ft.)			
11		**373**	**349**		36 inch piping inside volume (cu. ft.)			
12								
13								
14	**HORIZONTAL PIPING ONLY**							
15		**A**	**B**					
16		688.875	609.6875		Segment 1 Length			
17		**518**	**459**		36 inch piping inside surface area (sq. ft.)			
18		**373**	**330**		36 inch piping inside volume (cu. ft.)			
19								
20		**15**	**15**		Flow rate (scfh)			
21								
22								
23		57.40625	53.80729		feet of pipe, total			
24		43.21	40.50		feet of pipe, horizontal			
25								
26								
27		**Nodalization (Horizontals)**						
28								
29		688.8750	609.6875	**Node 1 Length (inches)**				
30		518	459	**Node 1 Surface Area (sq. ft.)**				
31		373	330	**Node 1 Volume (cu. ft.)**				
32		0.0000	0.0000	**Node 2 Length (inches)**				
33		0	0	**Node 2 Surface Area (sq. ft.)**				
34		0	0	**Node 2 Volume (cu. ft.)**				
35								
36								
37		**Nodalization (Totals)**						
38								
39		688.8750	645.6875	**Node 1 Length (inches)**				
40		518	486	**Node 1 Surface Area (sq. ft.)**				
41		373	349	**Node 1 Volume (cu. ft.)**				
42		0.0000	0.0000	**Node 2 Length (inches)**				
43		0	0	**Node 2 Surface Area (sq. ft.)**				
44		0	0	**Node 2 Volume (cu. ft.)**				

	A	B	C	D	E	F	G	H	I	J	K	L
1	**NOZZLE N**	**DWG No**	**PIPE DIA**	**LENGTH (IN)**	**COMMENTS**	**ELEV/DTL**	**WALL THK**					
2	**TIE-IN**											
3		**B 102**										
4	N3A-A1	VQ-7										
5			36 inch	35.750	HORIZONTAL PIPE AT ELEV 769'-6"							
6			36 inch	36.000	VERTICAL PIPE FORM ELEV 769'-6" TO ELEV 772'-6"							
7			36 inch	108.063	HORIZONTAL PIPE AT ELEV 772'-6"							
8												
9			SubTotal	179.813								
10		**B 102**										
11		VQ-5										
12			36 inch	310.25	HORIZONTAL PI AT ELEV 772'-6"							
13			36 inch	155.625	HORIZONTAL PIPE							
14			SubTotal	465.875								
15												
16		**A 101**										
17		VR-2										
18			36 inch	180.500	HORIZONTAL PIPE FROM DEBRIS SCREEN IVR03M TO DEBRIS SCREEN IVR02M							
19												
20			SubTotal	180.500								
21												
22		**A 101**										
23		VR-1										
24			36 inch	268.375	HORIZONTAL PIPE AT ELEV 775'-9" ANGLED AT 34 DEG							
25			36 inch	240.000	HORIZONTAL PIPE AT ELEV 775'-9"			DATA UNREADABLE SO VALUE WAS APPROXIMATED				
26			SubTotal	508.375								
27												
28												
29												
30						Vertical		**Horizontal**				
31				**TOTAL**		Segments		**Only**				
32				**1334.563**	Total Inches	36.000		**1298.5625**				
33				**111.214**	Total Feet	3.000		**108.214**				

	A	B	C	D
1	**DryWell Purge F**			
2	**34.5**	DryWell Purge 36 inch pipe ID		
3				
4				
5				
6	**TOTAL DWP**			
7			**Containment Penet. No.**	
8		**101**	**102**	
9		**A**	**B**	
10		=NozzN3A!D20+NozzN3A!D26	=NozzN3A!D9+NozzN3A!D14	Segment 1 Length
11		**=B10*PI()*$A$2/144**	**=C10*PI()*$A$2/144**	36 inch piping inside surface area (sq. ft.)
12		**=B10*PI()*($A$2/2)^2/1728**	**=C10*PI()*($A$2/2)^2/1728**	36 inch piping inside volume (cu. ft.)
13				
14				
15	**HORIZONTAL**			
16		**A**	**B**	
17		=NozzN3A!D18+NozzN3A!D24+NozzN3A!D25	=NozzN3A!D5+NozzN3A!D7+NozzN3A!D12+NozzN3A!D13	Segment 1 Length
18		**=B17*PI()*$A$2/144**	**=C17*PI()*$A$2/144**	36 inch piping inside surface area (sq. ft.)
19		**=B17*PI()*($A$2/2)^2/1728**	**=C17*PI()*($A$2/2)^2/1728**	36 inch piping inside volume (cu. ft.)
20				
21		**=0.16*60*((14.7+9)/14.7)**	**=0.16*60*((14.7+9)/14.7)**	Flow rate (scfh)
22				
23				
24		=B10/12	=C10/12	feet of pipe, total
25		=B11/12	=C11/12	feet of pipe, horizontal
26				
27				
28				

	A	B	C	D	E	F	G
1	**NOZZLE No**	**DWG No**	**PIPE DIA**	**LENGTH (IN)**	**COMMENTS**		
2	**TIE-IN**						
3		**B 102**					
4	N3A-A1	VQ-7					
5			36 inch	35.75	HORIZONTAL PIPE AT ELEV 769'-6"		
6			36 inch	36	VERTICAL PIPE FORM ELEV 769'-6" TO ELEV 772'-6"		
7			36 inch	108.0625	HORIZONTAL PIPE AT ELEV 772'-6"		
8							
9			SubTotal	=SUM(D5:D7)			
10		**B 102**					
11		VQ-5					
12			36 inch	310.25	HORIZONTAL PIPE No. IVQ07A-36"		
13			36 inch	155.625	HORIZONTAL PIPE		
14			SubTotal	=SUM(D12:D13)			
15							
16		**A 101**					
17		VR-2					
18			36 inch	180.5	HORIZONTAL PIPE FROM DEBRIS SCREEN IVR03M TO DEBRIS SCI		
19							
20			SubTotal	=SUM(D18:D18)			
21							
22		**A 101**					
23		VR-1					
24			36 inch	268.375	HORIZONTAL PIPE AT ELEV 775'-9" ANGLED AT 34 DEG		
25			36 inch	240	HORIZONTAL PIPE AT ELEV 775'-9"		
26			SubTotal	=SUM(D24:D25)			
27							
28							
29							
30						Vertical	**Horizontal**
31				**TOTAL**		Segments	**Only**
32				**=D9+D20+D14+D26**	Total Inches	=D6	**=D32-F32**
33				**=D32/12**	Total Feet	=F32/12	**=D33-F33**

ATTACHMENT 2

Revised Inputs, Assumptions, Results, and
Regulatory Guide 1.183 Conformance Tables

(Note: These tables supersede the tables provided in the original AST amendment request)

Revised Tables

Table 4: Key LOCA Analysis Inputs and Assumptions
Release Inputs – Primary and Secondary Containment Parameters
Table 5: Key LOCA Inputs and Assumptions
Transport Inputs – Control Room Parameters
Table 6: Key LOCA Analysis Inputs and Assumptions
Removal Inputs
Table 10: LOCA Radiological Consequence Analysis – Dose Contributors
Table 11: LOCA Radiological Consequence Analysis – Totals
Table 2: Conformance with RG 1.183 Appendix A (Loss-of-Coolant Accident)

Table 4: Key LOCA Analysis Inputs and Assumptions	
Release Inputs - Primary and Secondary Containment Parameters	
Input/Assumption	**Value**
Radionuclide Release Pathways	See Figure 1
Drywell Free Volume	241,699 cubic feet
Containment Air Space Volume	1,512,341 cubic feet
Minimum Suppression Pool Volume	146,400 cubic feet
Primary Containment Leak Rate (SGTS Filtered and SC Bypass)	0.65% per day for first 24 hours (L_a) 0.325% per day thereafter
Total MSIV leak rate	250 scfh (100 scfh assumed for the two shortest lines) 159 scfh after 24 hours
FWIV leak rate (Total for Two Penetrations) Containment atmosphere: ECCS Water:	10.98 cfm from 21.15 minutes to 1 hour 2 gpm from 1 hour to 24 hours 1 gpm after 24 hours
Secondary Containment (SC) Drawdown Time	10 minutes from start of gap release
Primary Containment Bypassing Secondary Containment	8.0% L_a for first day 4.0% L_a after first day
ECCS Systems Leakage into Secondary Containment Time of Unfiltered Release: Leak Rate: Flashing Fraction:	10 minutes 5 gpm 1.36%
High Volume Purge Penetrations (101 and 102) Leak Rate	2.0% L_a / penetration for first day 1.0% L_a / penetration after first day

Table 5: Key LOCA Analysis Inputs and Assumptions	
Transport Inputs – Control Room Parameters	
Input/Assumption	**Value**
Control Room Filtered Intake and Recirculation Air Filtration Initiation Time (manual)	20 minutes During this period of no filtration and no CR pressurization, an inleakage of 1650 cfm is assumed, which is 1/2 of assumed filter makeup value required for CR pressurization.
Control Room Volume	324,000 cubic feet
Control Room Filtered Air Intake Flow Rate: Elemental and Organic Iodine Efficiencies: Aerosols Efficiencies:	3000 - 10% = 2700 cfm(1) 97% 99%
Control Room Filtered Recirculation Rate and Efficiency	61,000 – 10% = 54,900 cfm 70% - 2% (bypass) = 68%
Allowable Control Room Filtered Inleakage Rate (value assumed for the LOCA analysis)	2250 cfm
Control Room Unfiltered Inleakage Allowance for a Known Filtered Inleakage	Conservative Unfiltered Inleakage Allowance [cfm] = $(I_{DF} - I_{KF}) * 0.32$ where: I_{DF} = Allowable Filtered Inleakage = 2250 cfm I_{KF} = Known Filtered Inleakage

(1) Sensitivity analyses determine that the – 10% limit is the bounding intake flow rate, but the effect of the variation is small

Table 6: Key LOCA Analysis Inputs and Assumptions	
Removal Inputs	
Input/Assumption	**Value**
Containment Spray Removal Rates	Not Credited
Aerosol Natural Deposition Coefficients Used in the Containment	Credit is taken for natural deposition of aerosols based on equations for the Power's model in NUREG/CR 6189 and input directly into RADTRAD as natural deposition time dependent lambdas. No credit is assumed for natural deposition of elemental or organic iodine, or for suppression pool scrubbing.
Aerosol Deposition/Plate-out (where credited)	Calculated for horizontal segments only using AEB-98-03 well-mixed model.
Main Steam Line and Condenser Deposition Credit for MSIV Leakage	No credit is taken for plate-out downstream of the MSIVs or in the condenser since these components have not been evaluated for seismic ruggedness.
SGTS Filter Efficiencies - Elemental and Organic Iodine Aerosols	 97% 99%

Table 10: LOCA Radiological Consequence Analysis – Dose Contributors			
Dose Contributor	**Control Room TEDE (rem)**	**EAB TEDE (rem)**	**LPZ TEDE (rem)**
Filtered Primary Containment (PC) Leakage	1.327	2.912	1.059
PC Leakage bypassing SC, with no piping deposition credit	0.923	4.976	0.964
MSIV Leakage, without LCS but with piping deposition credit	0.806	1.401	0.873
FWIV LCS Leakage of ECCS Water (unfiltered)	0.474	0.394	0.495
FWIV Air Leakage before fill with ECCS Water by LCS (unfiltered)	0.112	1.119	0.113
PC Leakage through purge penetrations 101 and 102, with piping deposition credit	0.0315	0.028	0.030
ECCS Leakage in Secondary Containment (SC) (unfiltered for 10 minutes, SGTS filtered thereafter)	0.155	0.139	0.146
Gamma Shine to Control Room	0.590	-	-
Total Calculated Value	**4.42**	**10.97**	**3.68**

Table 11: LOCA Radiological Consequence Analysis – Totals*			
Location	**Duration**	**TEDE (rem)**	**Regulatory Limit TEDE (rem)**
Control Room	30 days	4.86	5
EAB	Maximum, 2 hours	12.1	25
LPZ	30 days	4.05	25

* Including margin of 10%

Table 2: Conformance with RG 1.183 Appendix A (Loss-of-Coolant Accident)			
RG Section	**RG Position**	**CPS Analysis**	**Comments**
4.3	The effect of high wind speeds on the ability of the secondary containment to maintain a negative pressure should be evaluated on an individual case basis. The wind speed to be assumed is the 1-hour average value that is exceeded only 5% of the total number of hours in the data set. Ambient temperatures used in these assessments should be the 1-hour average value that is exceeded only 5% or 95% of the total numbers of hours in the data set, whichever is conservative for the intended use (e.g., if high temperatures are limiting, use those exceeded only 5%).	Conforms	The potential for high wind speeds impacting the ability of secondary containment to maintain negative pressures for wind speeds has been previously evaluated as discussed in USAR Section 6.5.1.1.1, where it is shown that bypass of SGTS would not occur for wind speeds up to approximately 30 miles per hour. Inspection of the data set used in the development of the AST χ/Qs shows that 30 mph is exceeded less than 5% of the time.
4.4	Credit for dilution in the secondary containment may be allowed when adequate means to cause mixing can be demonstrated. Otherwise, the leakage from the primary containment should be assumed to be transported directly to exhaust systems without mixing. Credit for mixing, if found to be appropriate, should generally be limited to 50%. This evaluation should consider the magnitude of the containment leakage in relation to contiguous building volume or exhaust rate, the location of exhaust plenums relative to projected release locations, the recirculation ventilation systems, and internal walls and floors that impede stream flow between the release and the exhaust.	Conforms	No credit is taken for dilution/mixing in secondary containment.
4.5	Primary containment leakage that bypasses the secondary containment should be evaluated at the bypass leak rate incorporated in the technical specifications. If the bypass leakage is through water, e.g., via a filled piping run that is maintained full, credit for retention of iodine and	Conforms	Bypass leakage has been analyzed at 8% of L_a. Additionally, the penetration 101 and 102 purge supply

Table 2: Conformance with RG 1.183 Appendix A (Loss-of-Coolant Accident)			
RG Section	**RG Position**	**CPS Analysis**	**Comments**
	aerosols may be considered on a case-by-case basis. Similarly, deposition of aerosol radioactivity in gas-filled lines may be considered on a case-by-case basis.		and exhaust penetrations are analyzed separately with an additional 2% of L_a each, with deposition of radioactivity analyzed using RADTRAD with equivalent filter efficiencies developed from well mixed models and parameters described in AEB-98-03 with median settling velocities. Since doses through the 101 and 102 penetrations are analyzed separately, they need no longer be considered as among the penetrations controlled under the 8% of L_a bypass leakage limit. Release of MSIV leakage at CPS has previously been based on the use of the MSIVLCS to assure filtration by the SGTS. This system is no longer credited. MSIV leakage will have a separate technical specification limit of 250 scfh total leakage with not more that 100 scfh per line. The dose consequences for releases through this pathway (with piping

Table 2: Conformance with RG 1.183 Appendix A (Loss-of-Coolant Accident)			
RG Section	**RG Position**	**CPS Analysis**	**Comments**
			deposition credit) are separately calculated. Since doses from MSIV leakage are analyzed separately, they need not be considered as among the penetrations controlled under the 8% of L_a bypass leakage limit. Feedwater piping deposition has also been evaluated for the 1 hour period before the lines are filled using the FWLCS. As discussed above, piping deposition credit is determined using the well mixed models and parameters described in AEB-98-03, with median settling velocities as identified as acceptable. Delay in transit through these piping system is not credited.
4.6	Reduction in the amount of radioactive material released from the secondary containment because of ESF filter systems may be taken into account provided that these systems meet the guidance of Regulatory Guide 1.52 and Generic Letter 99-02.	Conforms	SGTS filters meet these criteria and are therefore credited at an efficiency of 99% for all iodine chemical forms.
5.1	With the exception of noble gases, all the fission products released from the fuel to the containment (as defined in Tables 1 and 2 of this guide)	Conforms	With the exception of noble gases, all the fission products

Table 2: Conformance with RG 1.183 Appendix A (Loss-of-Coolant Accident)			
RG Section	**RG Position**	**CPS Analysis**	**Comments**
	$$FF = \frac{h_{f1} - h_{f2}}{h_{fg}}$$ *Where:* h_{f1} is the enthalpy of liquid at system design temperature and pressure; h_{f2} is the enthalpy of liquid at saturation conditions (14.7 psia, 212°F); and h_{fg} is the heat of vaporization at 212°F.		
5.5	If the temperature of the leakage is less than 212°F or the calculated flash fraction is less than 10%, the amount of iodine that becomes airborne should be assumed to be 10% of the total iodine activity in the leaked fluid, unless a smaller amount can be justified based on the actual sump pH history and area ventilation rates.	Conforms	An airborne release fraction of 1.36% is used. Suppression water pH is maintained above 7 for the entire 30 days accident dose assessment period. Under these conditions virtually none of the iodine will be in elemental form, and organic iodine formation will be inhibited. Because of the subcooled condition, the slow (on the order of one per day) air change rates, and the readily settleable nature of aerosol particulates that may spray from a leakage point, no flashing is expected. Nevertheless, the current design basis value, derived based on ORNL-TM-2412 methodology for iodine partition factor determination, is used.

Table 2: Conformance with RG 1.183 Appendix A (Loss-of-Coolant Accident)			
RG Section	**RG Position**	**CPS Analysis**	**Comments**
			homogeneously mix throughout the drywell air space. Mixing of this activity into the containment air space is as discussed under Item 3.7 above.
6.2	All the MSIVs should be assumed to leak at the maximum leak rate above which the technical specifications would require declaring the MSIVs inoperable. The leakage should be assumed to continue for the duration of the accident. Postulated leakage may be reduced after the first 24 hours, if supported by site-specific analyses, to a value not less than 50% of the maximum leak rate.	Conforms	MSIV leakage assumed in this accident analysis is 250 scfh for all steam lines and 100 scfh for any one line. A reduction in leakage of 50% is assumed at 24 hours, based on expected containment pressures at that time.
6.3	Reduction of the amount of released radioactivity by deposition and plateout on steam system piping upstream of the outboard MSIVs may be credited, but the amount of reduction in concentration allowed will be evaluated on an individual case basis. Generally, the model should be based on the assumption of well-mixed volumes, but other models such as slug flow may be used if justified.	Conforms	Modeling is with RADTRAD with piping treated as well mixed nodes. Equations for effective filter credit are per AEB-98-03. Settling velocities are median values per AEB-98-03. Organic iodine deposition is not credited. No credit is taken for deposition in the assumed broken inboard pipe segment.
6.4	In the absence of collection and treatment of releases by ESFs such as the MSIV leakage control system, or as described in paragraph 6.5 below, the MSIV leakage should be assumed to be released to the environment as an unprocessed, ground-level release. Holdup and dilution in the turbine building should not be assumed.	Conforms	Since MSIVLCS is no longer credited, no ESFs are assumed to be available to collect or treat MSIV leakage. Releases are assumed to be

Table 2: Conformance with RG 1.183 Appendix A (Loss-of-Coolant Accident)			
RG Section	**RG Position**	**CPS Analysis**	**Comments**
			from the combined exhaust stack, without credit for holdup or dilution in the condenser or turbine building.
6.5	A reduction in MSIV releases that is due to holdup and deposition in main steam piping downstream of the MSIVs and in the main condenser, including the treatment of air ejector effluent by offgas systems, may be credited if the components and piping systems used in the release path are capable of performing their safety function during and following a safe shutdown earthquake (SSE). The amount of reduction allowed will be evaluated on an individual case basis. Regulatory Guide 1.187 References A-9 and A-10 provide guidance on acceptable models.	Conforms	Main steam piping downstream of the MSIVs is credited for piping that is capable of performing their safety function during and following an SSE. No credit is taken for deposition in piping downstream of this, or in the condenser.
7.0	The radiological consequences from post-LOCA primary containment purging as a combustible gas or pressure control measure should be analyzed. If the installed containment purging capabilities are maintained for purposes of severe accident management and are not credited in any design basis analysis, radiological consequences need not be evaluated. If the primary containment purging is required within 30 days of the LOCA, the results of this analysis should be combined with consequences postulated for other fission product release paths to determine the total calculated radiological consequences from the LOCA. Reduction in the amount of radioactive material released via ESF filter systems may be taken into account provided that these systems meet the guidance in Regulatory Guide 1.52 and Generic Letter 99-02.	Conforms	Containment purging as a combustible gas or pressure control measure is not required nor credited in any design basis analysis for 30 days following a design basis LOCA at CPS. Also see the Regulatory Guide Section 3.8 discussion in this Table.