NMC
Committed to Nuclear Excellence

KEWAUNEE NUCLEAR POWER PLANT
Operated by Nuclear Management Company, LLC

March 12, 2005

NRC-05-032

U. S. Nuclear Regulatory Commission
ATTN: Document Control Desk
Washington, D.C. 20555

Kewaunee Nuclear Power Plant
Docket 50-305
License No. DPR-43

Kewaunee Containment Equipment Hatch Interference Data

Reference: Letter from Mark A. Satorius (NRC RIII) to Craig Lambert (NMC), "Preliminary Significance Determination For A Greater Than Green Finding (NRC Inspection Report 50-305/2004-09) – Kewaunee Containment Equipment Hatch Interference," dated February 18, 2005.

Nuclear Regulatory Commission (NRC) Inspection Report 50-305/2004-09 documented an issue associated with prompt closure of the containment equipment hatch at the Kewaunee Nuclear Power Plant (KNPP). In the above referenced letter, the NRC provided the Nuclear Management Company, LLC, (NMC) with the NRC's preliminary significance determination for the performance deficiency and offered NMC an opportunity to present our perspectives prior to finalization of the NRC's significance determination.

NMC has requested a Regulatory Conference to present our perspectives on the facts and assumptions used. This Regulatory Conference is scheduled for March 17, 2005, at the NRC Region III headquarters. Additionally the NRC encouraged NMC to submit supporting documentation for the requested Regulatory Conference before the conference.

Since the issuance of the Inspection Report, NMC has performed further analysis to better characterize the probabilistic risk assessment (PRA) assumptions and inputs. Enclosed are the latest results of that work for use at the requested Regulatory Conference. Additional information, that may be helpful in assessing this issue, will be submitted within several days.

A001

N490 Highway 42 • Kewaunee, Wisconsin 54216-9511
Telephone: 920.388.2560

If you have any comments or questions please contact Mr. Gerald Riste of my staff at (920) 388-8424.

Summary of Commitments

This letter contains no new commitments and no revisions to existing commitments.

for

Craig W. Lambert
Site Vice-President, Kewaunee Nuclear Power Plant
Nuclear Management Company, LLC

Enclosures (1)

cc: Administrator, Region III, USNRC
Project Manager, Kewaunee, USNRC
Resident Inspector, Kewaunee, USNRC
Public Service Commission of Wisconsin

ENCLOSURE 1

RISK ASSESSMENT FOR KEWAUNEE CONTAINMENT HATCH CLOSURE ISSUE

Revision 4 – March 2005

29 pages follow

PRA APPLICATION DOCUMENTATION FORM

PRA APPLICATION # 05-07

DATE March 12, 2005

PRA MODEL REVISION: N/A

PERSON(S) INVOLVED: E. D. Coen T. L. Breene

J. P. Masterlark J. F. Helfenberger

1.0 DESCRIPTION

Evaluate the risk of the Kewaunee containment hatch closure issue.

2.0 METHODOLOGY

See attached

3.0 ASSUMPTIONS

See attached

4.0 MODELS/CALCULATIONS

See attached

5.0 RESULTS AND CONCLUSIONS

See attached

Responsible Person: Edward D Coen March 12, 2005

Technical Reviewer: Joel F. Helfenberger March 12, 2005

Summary of Dominant Scenario

Loss of Offsite Power with Diesel Generator B Failure

Failure	Probability
Loss of Offsite Power During Shutdown	0.189/Year
Diesel Generator B Fails	0.0108
Core Damage Before Flow Restoration	0.068
Charging via TSC Diesel Fails	0.0661
Equipment Hatch Closure Fails	0.37
Total Large Early Release Frequency (LERF)	3.40×10^{-6}/year

The time in question is the time that diesel generator A was out of service with the obstruction present (2.73 days).

Large Early Release Probability is:

LERP = 3.40×10^{-6}/year * 2.73 / 365 = 2.5×10^{-8}

The condition of having an obstruction hampering containment hatch closure is of very low significance.

Justification for Each Number Used in the Analysis

I. Loss of Offsite Power Occurs

The LOSP frequency for a shutdown configuration, from Reference 1, is 1.89×10^{-1}/year

II. Diesel Generator B Fails

The failure of diesel generator B is dominated by the following failure modes:

Failure Mode	Probability
Diesel Generator B Fails to Run (Unrecovered)	3.855×10^{-3}
Non-Recovery Probability	0.757
Diesel Generator B Fails to Run (Recovered)	2.92×10^{-3}
Diesel Generator B Fails to Start (Unrecovered)	9.231×10^{-3}
Non-Recovery Probability	0.853
Diesel Generator B Fails to Start (Recovered)	7.87×10^{-3}

The failure to run and failure to start data are from plant-specific data from October 1995 through February 2005. The mission time is 1.628 hours. This is based on the area under the recovery curve in Reference 1 and represents the probability weighted average of loss of offsite power recovery time. Diesel generator ventilation and air supply are counted as part of the diesel generator in this data. Support system probabilities were also examined, but they are not dominant because failure of multiple components is required.

Operators are directed by procedure to make attempts to recover diesel generators. If a diesel fails with a loss of offsite power, control room lighting is lost, which is a compelling indication. The control room and diesel rooms are equipped with emergency lighting, so light would be available. During the time of concern there was a "super crew" (a double operating crew) and maintenance personnel available at all time.

The sum of the recovered run and start failure probabilities is 1.08×10^{-2}.

III. Core Damage Before Flow Restoration

Reference 3 shows that core uncovery occurs at 5.44 hours for the reactor vessel head studs tensioned case and no earlier than 9.0 hours for the studs detensioned case.

Once power is restored, RHR cooling would be restored. The duration of a loss of offsite power is based on data from Reference 1. For the studs tensioned case, a non-restoration probability of 0.077 is used. This value is for 4.94 hours, allowing 30 minutes for restoration of power from the grid to safeguards components. For the studs detensioned case, a non-restoration probability of 0.038 is used. This value is for 8.5 hours, allowing 30 minutes for restoration of power from the grid to safeguards components. The 30 minutes is a conservative value, based on operator interviews and validated on the Kewaunee simulator.

The time with studs tensioned was from 0127 on 10/12 to 0300 on 10/14, which is 49.55 hours (see exposure time discussion below for details). The time with studs detensioned was from 0300 to 1855 on 10/12, which is 15.9167 hours. The average non-restoration probability for the entire interval is:

$$\frac{0.077 \times 49.55 + 0.038 \times 15.9167}{49.55 + 15.9167} = 0.068$$

IV. Charging via Technical Support Center Diesel Generator Fails

One charging pump is capable of supplying 60 gallons per minute (gpm) of flow. An NMC calculation performed using the methodology of Reference 4 shows that at 50 hours after shutdown, 47 gpm of flow is sufficient to remove decay heat. The scenario in question occurred at least 72 hours after shutdown, so one charging pump is sufficient to remove decay heat.

The thermal hydraulic calculations in Reference 3 do not include charging. In these cases, the total boiloff rate remains below the capacity of one charging pump. In reality, once charging is established it will reduce the boiloff rate and eventually stop boiling altogether due to the influx of cool RWST water.

There are two parts to failure probability. The first is the equipment failures and the second is operator errors. The dominant equipment failures are:

Failure Mode	Probability
TSC Diesel Generator Fails to Run	5.560×10^{-3}
TSC Diesel Generator Fails to Start	1.504×10^{-2}

The TSC diesel was in service for the entire time in question. The failure to run probability is based on a Bayesian update of generic data from plant specific data from Reference 2. The failure to start probability is based on plant specific data from October 1995 through February 2005. The mission time is 1.628 hours. This is based on the area under the recovery curve in Reference 1 and represents the probability weighted average of loss of offsite power recovery time. Diesel generator ventilation and air supply are considered part of the diesel generator in this data. The sum of these is 2.060×10^{-2}. Support system probabilities and charging failures were also examined, but they are not dominant because failure of multiple components is required.

There are two important human error probabilities (HEPs). One is to establish power for the TSC diesel generator to one charging pump. The HEP for this is 3.697×10^{-2} (See Appendix A for details). The second HEP is a latent failure to restore the TSC diesel after testing. The HEP for this failure is 8.558×10^{-3}. This HEP is unchanged from the current PRA model.

The total failure probability for this node is 6.613×10^{-2}.

V. Equipment Hatch Closure Fails

The probability of a failure to close the equipment hatch with an obstruction in place is 0.37.

Appendix A describes these HEPs in detail.

VI. Exposure Time

The following time line, from logs kept during the event, shows some of the key times in the scenario. When the track was installed the Reactor Coolant System (RCS) was full, both pressurizer

safety valves were in place, the reactor head was fully tensioned and the steam generators were filled to normal level.

Event	Date	Time
Start of Track Installation	10/11	1245
Diesel Generator A out of Service for Surveillance but Available.	10/11	1327
Pressurizer Safety Valve Removed	10/11	1430
Diesel Generator A Returned to Service	10/11	1510
Diesel Generator B out of Service	10/11	1604
Diesel Generator B Returned to Service	10/11	1947
Started Reactor Coolant System Draindown	10/12	0032
Diesel Generator A out of Service	10/12	0127
Completed Reactor Coolant System Draindown	10/12	0502
Steam Generator A Filled to Wet Layup	10/12	1617
Steam Generator B Filled to Wet Layup	10/12	2340
Reactor Vessel Stud Detensioning Begins	10/13	1045
Reactor Vessel Stud Detensioning Ends	10/14	0300
Track is Removed	10/14	1855

Prior to 1604 on 10/11, Both diesel generators were available. As a result, the failure probability of a single diesel generator failure, 0.0108 as described in Section II above, would be replaced by the probability of both diesels failing, which is about $8x10^{-4}$, based on a common cause β of 0.07.

Diesel generator A was removed from service from 1327 to 1510 in 10/11 This out of service time was due to SP-33-110, SI sequencer test. The diesel generator was actually available because it is running during this test. If a loss of power would occur during the test, power would not be interrupted from the safeguards electrical buses.

During the period from 1604 to 1947 on 10/11, (0.1549 days) Diesel Generator B was out of service. Since the duration of the out of service time was less than the calculated time to core uncovery, this time is not considered in the analysis.

During the period from 0127 on 10/12 to 0300 on 10/14, (2.065 days) Diesel Generator A was out of service, reactor vessel head studs were tensioned and the obstruction was in place in the equipment hatch. Reference 3 shows that during this time, core uncovery is prevented if injection is restored within 5.44 hours.

During the period from 0300 to 1855 on 10/14, (0.663 days) Diesel Generator A was out of service, reactor vessel head studs were detensioned and the obstruction was in place in the equipment hatch. Since Diesel Generator A was being overhauled and was disassembled, no credit is taken for recovery. Reference 3 shows that during this time, core uncovery is prevented if injection is restored within 9 hours.

Other Scenarios:

<u>Small Break LOCA</u>

The scenario here is a small beak LOCA due to a flow diversion, followed by a failure to diagnose the event and isolate the diversion path.

A small break LOCA due to a flow diversion at shutdown conditions has an initiating frequency of 0.083 from generic shutdown data, less than that for a loss of offsite power. Operators must fail to isolate the diversion path (HEP = 0.071), must fail to provide charging using the normal power supply (safeguards power) (HEP = 0.002), and bleed and feed via safety injection must fail (HEP = 0.0035) for core damage to occur. Since there are multiple independent systems available and no local actions are needed to provide power, the core damage frequency is about $4x10^{-8}$/year, which is almost two orders of magnitude below that of a loss of power.

During the time that RCS draindown was occurring, from 0032 to 0502 on 10/12, the small LOCA frequency would be somewhat higher. But since the time period was short and the risk associated with a small break LOCA is low, the risk due to draindown is insignificant.

Interfacing Systems LOCA

An interfacing LOCA is not affected by a delay in closing the equipment hatch, since containment is bypassed altogether.

System Initiators

Loss of RHR cooling, loss of component cooling and loss of service water have the same effect. RHR cooling is interrupted and would need to either be reestablished or an alternate source of cool water, the RWST must be used for injection. The initiating frequencies for these events, 0.025 for loss of RHR (from generic shutdown data), 0.034 for loss of component cooling (from the at-power model) and 0.0043 for loss of service water (from the at-power model). These are all less than that for a loss of offsite power. Operators must fail to recover the system (HEP = 0.021), must fail to provide charging using the normal power supply (safeguards power) (HEP = 0.002), and bleed and feed via safety injection must fail (HEP = 0.0035) for core damage to occur. Since there are multiple independent systems available and no local actions are needed to provide power, the core damage frequency is about $8x10^{-9}$/year, which is several orders of magnitude below that of a loss of power.

A single train loss of RHR is also included in the model, with an initiating frequency of 0.084, greater than the loss of a complete system, but still less than the loss of offsite power. This initiator has a simple recovery, to start the standby train. If this recovery fails, the alternate sources discussed above are still available. During the entire period that containment closure was hampered, both RHR pumps were available.

These are the only initiators considered because they are the only initiators in the internal events shutdown model that could affect availability of Residual Heat Removal.

Qualitative Evaluation of External Events

Seismic

The diesel generators have a mean seismic capacity of 1.57g, from the Kewaunee Seismic PRA (SPRA), with a standard deviation of 0.46g. This is considerably higher than that used for containment in the SPRA (0.64 and 0.3, respectively). If a seismic event severe enough to damage containment occurred, hatch closure would be irrelevant. If a less severe seismic event occurred, diesel generators would be available, so the scenario discussed in this report would not occur unless a random failure occurred.

Since the frequency of a seismic event at Kewaunee is small ($1.1x10^{-4}$/year for a design basis earthquake) compared to that of a random loss of offsite power with no recovery ($1.3x10^{-2}$/year), the core damage frequency for a seismic event followed by random failures is insignificant.

Fire

The initiating frequency for any fire in the plant would be considerably smaller than the internal events values used in this report. The only fires that could potentially result in a significant core damage frequency are those that result in a loss of offsite power and the failure of diesel generator B.

In the analysis done for the fire PRA, there are four rooms that contain cabling to both offsite power supplies and diesel generator B. These rooms are:

1. The CO_2 Storage Tank Room
2. The Bus 61 and 62 Room
3. The Diesel Generator B Room
4. The Auxiliary Feedwater Pump B Room

The CO_2 storage tank room and bus 61 and 62 room can be eliminated from the analysis, because all fire sources in the room were analyzed but none resulted in damage to the cabling in concern.

The diesel generator B room was posted as "Protected Equipment" during the entire period in question. This means that no work would be allowed in the room without permission from the Shift Manager. This means that the major sources for fires in the room (diesel generator oil and transient combustibles) can be eliminated, resulting in a fire frequency of $4.5x10^{-4}$/year. This frequency is a factor of 4 below the random frequency of a loss of offsite power with a diesel generator failure ($2.0x10^{-3}$/year). That, coupled with the automatic detection and suppression in room, makes the frequency of a fire in this room negligible.

The auxiliary feedwater pump B room was examined for the Kewaunee fire PRA. This room has automatic detection and a water suppression system. The resulting initiating event frequency of a fire with a failure of suppression and detection is $3.27x10^{-6}$/year. Coupled with equipment hatch closure, the large early release frequency is $1.21x10^{-6}$/year. This is a factor of 2 below the internal events value.

Other

High winds, tornadoes, external floods and other external events were screened out of the Kewaunee PRA as not important, due to their low initiating frequency. The initiating frequencies are well below the ones already examined in this report.

References

1. NUREG-CR/INEEL/EXT-04-02326, "Evaluation of Loss of Offsite Power Events at Nuclear Power Plants: 1986 - 2003 (Draft)," October 2004.

2. NUREG/CR-5500 Volume 5 "Emergency Diesel Generator Power System Reliability – 1997-2003," September 2004.

3. Westinghouse Electric Company Report, "Kewaunee Response to a Potential Loss of RHR Cooling Due to a Loss of All AC Power While at Reduced Inventory Conditions" March 2005.

4. WCAP-11916, "Loss of RHR Cooling While the RCS is Partially Filled."

Appendix A

Human Event Probability Calculations

HEP	35--CH2-SD---HE	HEP Description	Establish Charging Flow while shutdown
Revision Date	12/20/2004	Evaluator	GE Baldwin
Reviewer	E. Coen	Operations Review	S. Cieslewicz
Operations Input	I / S: Simulator observation and operator interviews conducted from 9/25/02 to 6/3/03		
Scenario	The operators are directed by ECA-0.0 to establish charging flow using the TSC Diesel and Charging Pump C. The operators take several steps to ensure a successful re-energization of Bus 52. Re-energizing Bus 52 allows the starting of Charging Pump A or C that provides makeup to RCS.		
Event Description	The operators are directed by ECA-0.0 to establish charging flow using the TSC Diesel and Charging Pump C. The operators take several steps to ensure a successful re-energization of Bus 52. Re-energizing Bus 52 allows the starting of Charging Pump A or C that provides makeup to RCS.		
Assumptions for the Event	The following assumptions are made: • Due to training the operator will use ECA-0.0 to establish charging • The TSC Diesel started and properly energized Bus 46. • Charging Pump A or C is available. • Operations department has established "super crews" and thus has additional personnel to deal with event. • Time is available to re-perform all steps of the procedure to recover from any error. • 50 gpm is enough injection to make up for boil off and refill of the RCS.		
Timing Analysis	It is assumed that the operators will have 5 hours to initiate RCS refill to prevent core uncover per *Kewaunee Response to a Potential Loss of RHR Cooling Due to a Loss of All AC Power While at Reduced Inventory Conditions* (March 2005). Based on operator interview, it is estimated that the operators will start the alignment in approximately 15 minutes and will have initiated RCS refill in 36 minutes.		
Success Criteria	Greater than 50 gpm charging flow established to RCS.		
References Used	ECA-0.0		
Cognitive Assumption	It is assumed proper place keeping is used.		
Cognitive Recovery Assumptions	It is assumed STAR self-checking is used.		

Execution Assumptions	Time to recover from an unsuccessful start exist.
Execution Recovery Assumptions	None

35--CH2-SD---HE, Establish Charging Flow while shutdown

Basic Event Summary

Analyst:	GEB
Rev. Date:	03/08/05
Cognitive Method:	CDBTM/THERP

Table 1: 35--CH2-SD—HE SUMMARY

Analysis Results:	**without Recovery**	**with Recovery**
P_{cog}	3.0e-03	1.5e-03
P_{exe}	1.1e-01	3.5e-02
Total HEP		3.7e-02
Error Factor		5

HFE Scenario Description:
The operators are directed by ECA-0.0 to establish charging flow using the TSC Diesel and Charging Pump C. The operators take several steps to ensure a successful re-energization of Bus 52. Re-energizing Bus 52 allows the starting of Charging Pump A or C that provides makeup to RCS and stops RXCP seal leakage.

Related Human Interactions:
None

Performance Shaping Factors:
Optimal stress was assigned due to being in a shutdown condition and the additional support personnel available to assist the operator.

Note: Due to the time of core uncovery, additional time is available to recover and/or correct actions taken.

Procedure and step governing HI:
ECA-0.0. step 1-16 with steps 6, 12,13, 14, and 16 being necessary to be completed successfully to complete the task.

Training:

- **None**
X - **Classroom** Frequency: 1
X - **Simulator** Frequency: 1

Degree of Clarity of Cues & Indications:

- **Very Good**
X - **Average**
- **Poor**

Human-Machine Interface:

X - **Control Room Panels**
X - **Local Control Panels**
X - **Local Equipment**

Special Requirements:

Tools	Parts	Clothing
Required	Required	Required
Adequate	Adequate	Adequate
Available	Available	Available

Type of Response:

- **Skills**
X - **Rule**
- **Knowledge**

Complexity of Response

Cognitive	Execution
- Complex	X - Complex
X - Simple	- Simple

Environment:

Lighting	Heat/Humidity
- Normal	X - Normal
X - Emergency	- Hot / Humid
- Portable	- Cold
Radiation	**Atmosphere**
X - Background	X - Normal
- Green	- Steam
- Yellow	- Smoke
- Red	- Respirator required

Equipment Accessibility:

	Location	Accessibility
X	- **Control Room Front Panels**	Accessible
	- **Control Room Back Panels**	
	- **Hot Shutdown Panels**	
X	- **Auxiliary Building**	Accessible
	- **Electrical Building**	
	- **Containment**	
	- **Pump house**	
	- **Switchyard**	

Stress:

- **Optimum (Low)**
X - **Moderate**
- **Extreme (High)**

Cognitive Unrecovered

35--CH2-SD---HE

Cue:
Loss of offsite power with Bus 5 and Bus 6 de-energized.

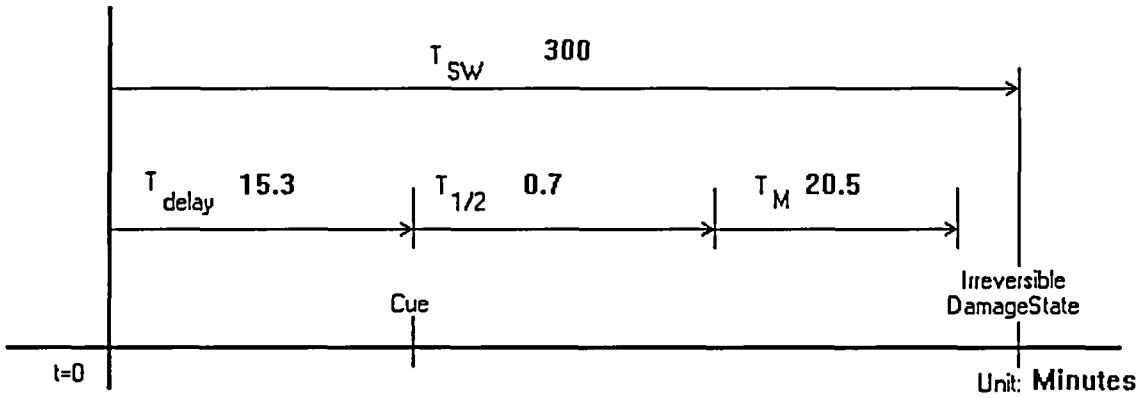

Reference for System Time: Core Uncover calculation

Reference for Manipulation Time: Operator interviews and Simulator observation

Duration of time window available for action (TW): *263.50 Minutes*

Table 2: 35--CH2-SD---HE COGNITIVE UNRECOVERED

Pc Failure Mechanism	Branch	HEP
Pc_a: Availability of Information	a	neg.
Pc_b: Failure of Attention	h	neg.
Pc_c: Misread/miscommunicate data	a	neg.
Pc_d: Information misleading	a	neg.
Pc_e: Skip a step in procedure	c	3.0e-03
Pc_f: Misinterpret instruction	a	neg.
Pc_g: Misinterpret decision logic	l	neg.
Pc_h: Deliberate violation	a	neg.
Sum of Pc_a through Pc_h = Initial Pc =		3.0e-03

pca: Availability of information

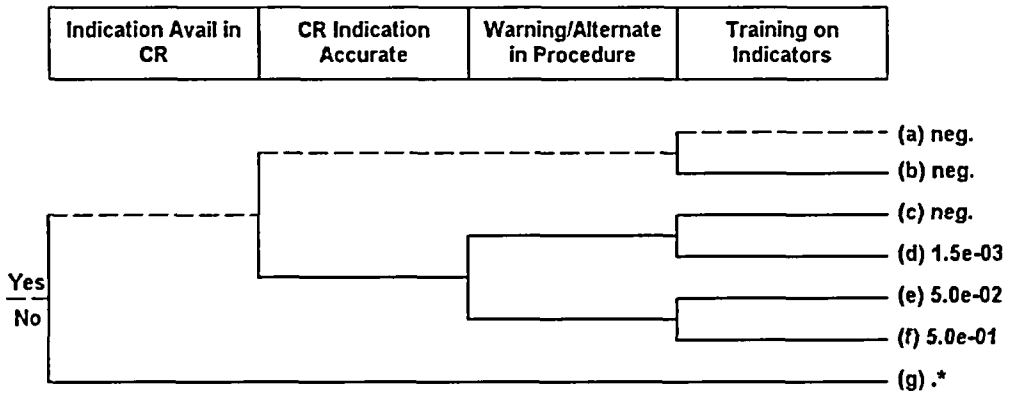

pcb: Failure of attention

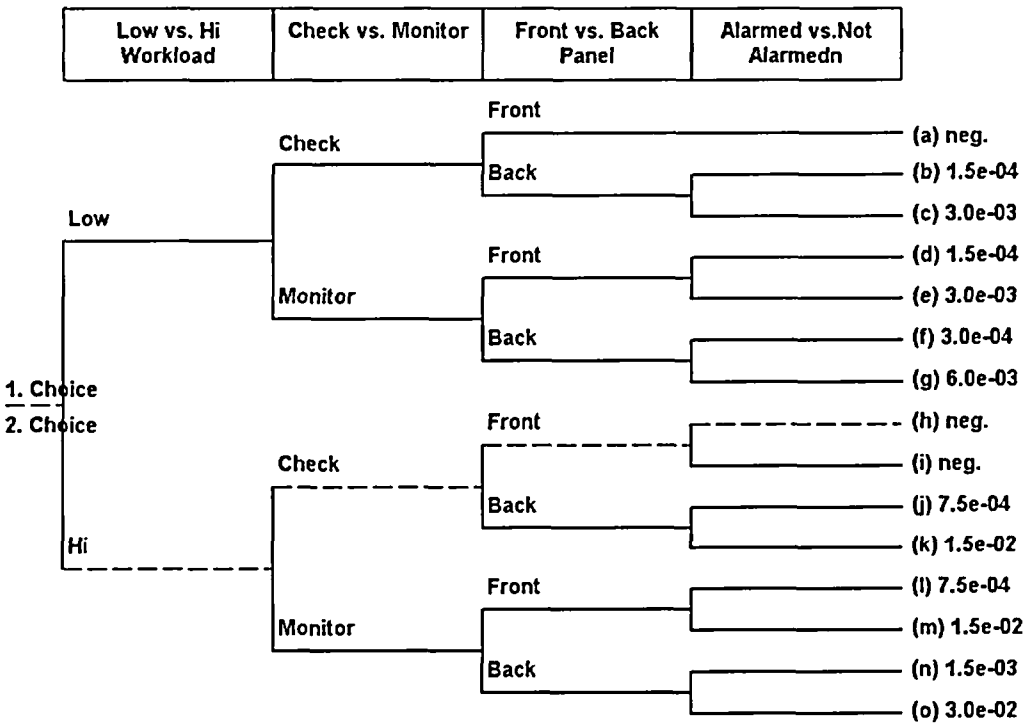

pcc: Misread/miscommunicate data

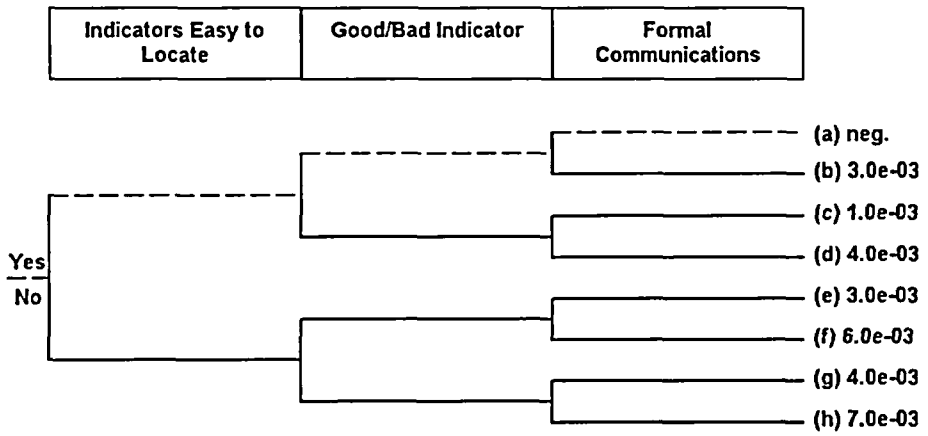

pcd: Information misleading

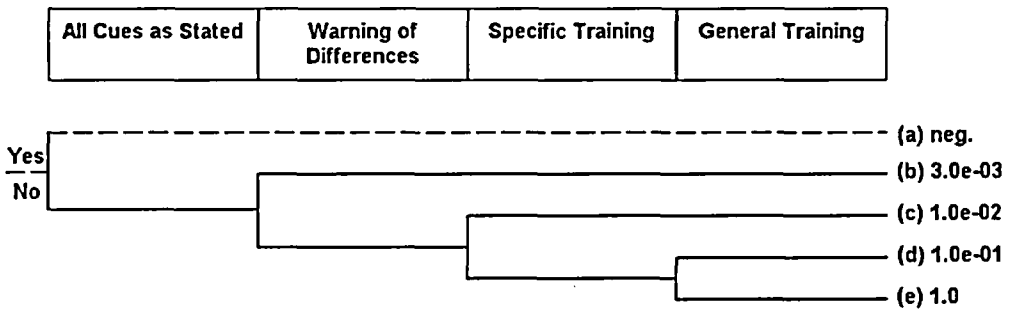

pce: Skip a step in procedure

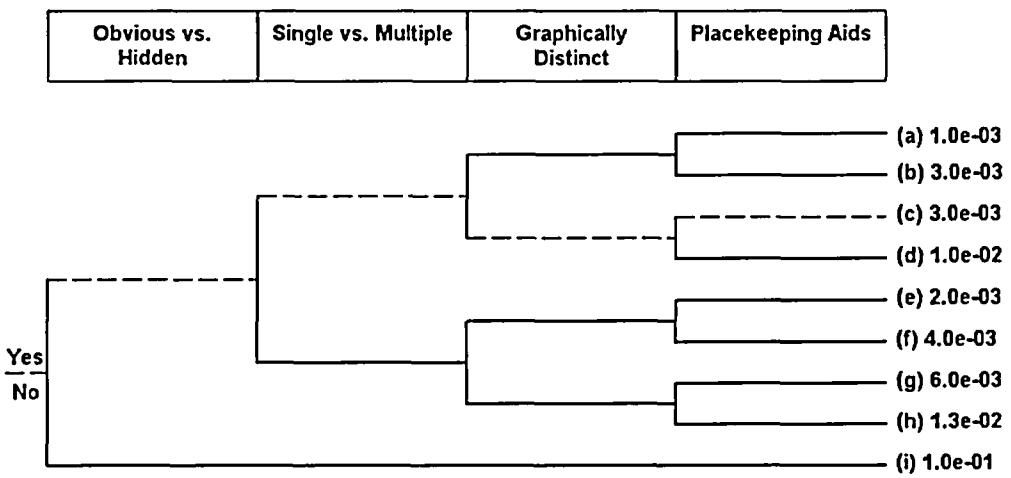

pcf: Misinterpret instruction

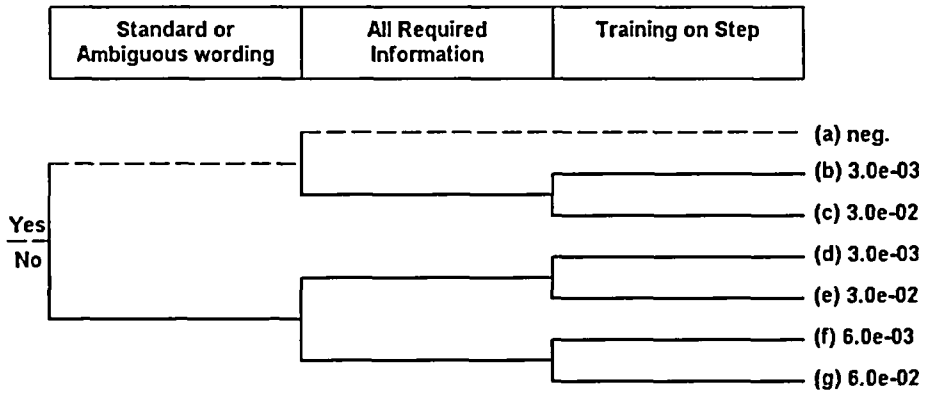

pcg: Misinterpret decision logic

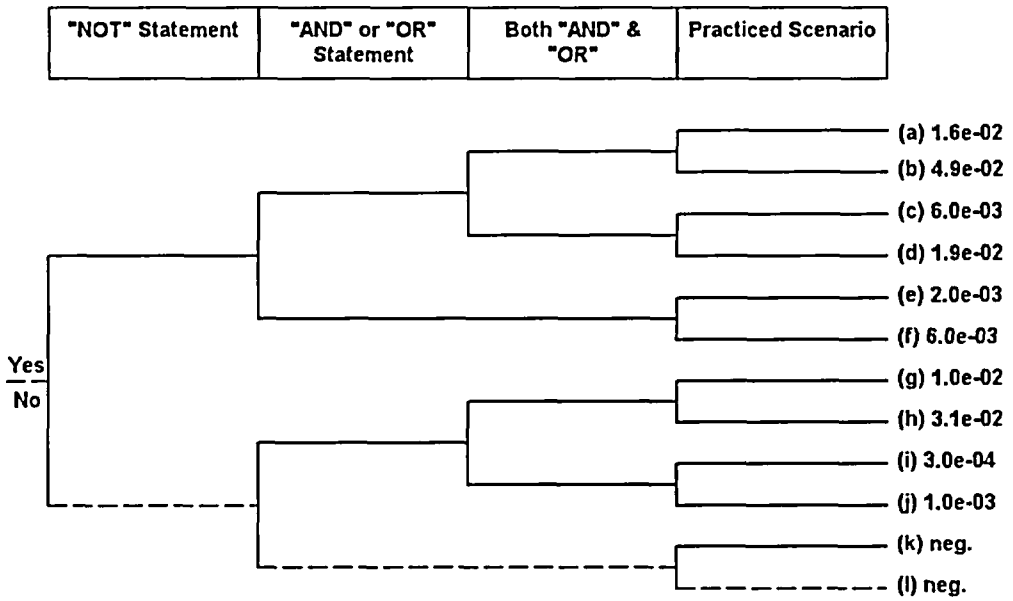

pch: Deliberate violation

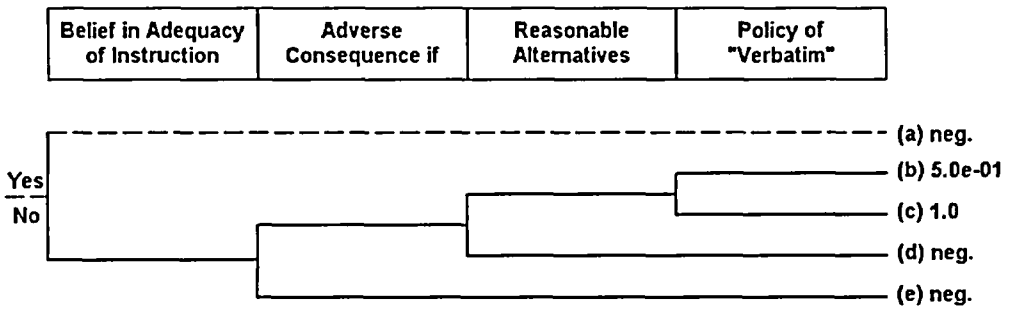

Cognitive Recovery

35--CH2-SD---HE

Table 3: 35--CH2-SD---HE COGNITIVE RECOVERY

	Initial HEP	Self-Review	Extra Crew	STA Review	Shift Change	ERF Review	Recovery Matrix	DF	Multiply HEP By	Override Value	Final Value
Pc_a:	neg.	-	-	-	-	-	NC	-	1.0		
Pc_b:	neg.	-	-	-	-	-	NC	-	1.0		
Pc_c:	neg.	-	-	-	-	-	NC	-	1.0		
Pc_d:	neg.	-	-	-	-	-	NC	-	1.0		
Pc_e:	3.0e-03	-	X	-	-	-	5.0e-01	-	5.0e-01		1.5e-03
Pc_f:	neg.	-	-	-	-	-	NC	-	1.0		
Pc_g:	neg.	-	-	-	-	-	NC	-	1.0		
Pc_h:	neg.	-	-	-	-	-	NC	-	1.0		
Sum of Pc_a through Pc_h = Initial Pc =											1.5e-03

Recovery Factors identified:
Super crews (double crews) are used during the outage so extra crew would be present.

Execution Unrecovered

35--CH2-SD---HE

Table 4: 35--CH2-SD---HE EXECUTION UNRECOVERED

Step	Omission					Commission					Total	
		Table	Item	Stress	Stress		Table	Item	Stress	Stress	Over	Per
Step No.	HEP	Ref.	Ref.	E/M/O	Value	HEP	Ref.	Ref.	E/M/O	Value	Ride	Step
Step 6	4.3E-4	20-7b	1	M	2	1.3E-3	20-12	3	M	2		3.5e-03
Actions: Place the following equipment in pullout						Comments: Steps 1-4 and 10 are verification of auto actions that are assumed to have occurred. Steps 5 and 8 are assumed unsuccessful. Steps 7 and 9 are required to migate the overall plant problem, they are not required to sucessfully establish charging flow.						
Step 12	1.3E-3	20-7b	2	M	2	1.3E-3	20-12	4	M	2		5.2e-03
Actions: Open breaker 15201						Comments:						
Step 13.a	1.3E-3	20-7b	2	M	2	1.3E-3	20-12	3	M	2		5.2e-03
Actions: Place the following control switches to OFF						Comments:						
Step 13.b	1.3E-3	20-7b	2	M	2	1.3E-3	20-12	3	M	2		5.2e-03
Actions: Place the following control switches to pullout						Comments: Steps 13.c is required to migate the overall plant problem, it is not required to sucessfully establish charging flow.						
Step 13.d	1.3E-3	20-7b	2	M	2	neg.	20-12	1a	M	2		2.6e-03
Actions: Open the following Relay Room panel doors						Comments:						
Step 14.b.1	1.3E-3	20-7b	2	M	2	3.8E-3	20-12	12	M	2		1.0e-02
Actions: Open Breaker 14606						Comments: For Step 14.a see 05B-MU3A-SBO-HE						
Step 14.b.2	1.3E-3	20-7b	2	M	2	3.8E-3	20-12	12	M	2		1.0e-02
Actions: Close Breaker 14607						Comments:						
Step 14.c.1	1.3E-3	20-7b	2	M	2	3.8E-3	20-12	12	M	2		1.0e-02
Actions: Open the following breakers of MCC-52C						Comments:						
Step 14.c.2	1.3E-3	20-7b	2	M	2	6.3E-3	20-12	11	M	2		1.5e-02
Actions: Open the following breakers of BRA-127						Comments:						
Step 14.c.3	1.3E-3	20-7b	2	M	2	neg.	20-12	1a	M	2		2.6e-03
Actions: Block open the following doors						Comments:						
Step 14.d.1	1.3E-3	20-7b	2	M	2	3.8E-3	20-12	12	M	2		1.0e-02
Actions: Open the following breakers of MCC-52E						Comments:						
Step 14.e.1	1.3E-3	20-7b	2	M	2	3.8E-3	20-12	12	M	2		1.0e-02
Actions: Open the following breakers of Bus 52						Comments:						
Step 14.e.2	1.3E-3	20-7b	2	M	2	3.8E-3	20-12	12	M	2		1.0e-02
Actions: Notify the Control Room and Close Breaker 15210						Comments:						
Step 15	1.3E-3	20-7b	2	M	2	neg.	20-11	8	M	2		2.6e-03
Actions: Verify Bus 52 Energized						Comments:						
Step 16.a	1.3E-3	20-7b	2	M	2	1.3E-3	20-12	3	M	2		5.2e-03
Actions: Close CVC-212						Comments:						
Step 16.b	1.3E-3	20-7b	2	M	2	1.3E-3	20-12	3	M	2		5.2e-03

Actions: Close CVC-7						Comments: Step 16.c is not required since it will occur automatically at 5% VCT level if bus 52 is energized.						
Step 16.d	1.3E-3	20-7b	2	M	2	2.7E-3	20-12	9	M	2		8.0e-03
Actions: Place Charging Pump A Controller to minimum speed						Comments:						
Step 16.e -Recovery	1.3E-3	20-7b	2	M	2	1.3E-3	20-12	4	M	2		5.2e-03
Actions: Start Charging Pump A to establish RXCP seal injection flow						Comments:						
Step 16.e	1.3E-3	20-7b	2	M	2	1.3E-3	20-12	4	M	2		5.2e-03
Actions: Start Charging Pump A to establish RXCP seal injection flow						Comments:						
Step 16.f	1.3E-3	20-7b	2	M	2	1.3E-3	20-12	3	M	2		5.2e-03
Actions: Slowly open CVC-7 and control charging flow to restore PRZR level						Comments:						
Step 16.f - Recovery	1.3E-3	20-7b	2	M	2	1.3E-3	20-12	3	M	2		5.2e-03
Actions: Slowly open CVC-7 and control charging flow to restore PRZR level						Comments:						
Step 31.a RNO a.5	1.3E-3	20-7b	2	M	2	neg.	20-11	8	M	2		2.6e-03
Actions: Go to step 15						Comments:						
Recovery	1.3E-3	20-7b	2	M	2	1.3E-3	20-12	4	M	2		5.2e-03
Actions: No power to start Charging pump						Comments: Due to being Shutdown, additional time is available to recover TCS Diesel and try a restart by a review of the required step.						

Execution Recovery

35--CH2-SD---HE

Table 5: 35--CH2-SD---HE EXECUTION RECOVERY

Critical Step No.	Recovery Step No.	Action	HEP (Crit)	HEP (Rec)	Dep.	Cond. HEP (Rec)	Total for Step
Step 6		**Place the following equipment in pullout**	**3.5e-03**				**5.2e-04**
	Recovery	No power to start Charging pump		5.2e-03	MD	1.5e-01	
Step 12		**Open breaker 15201**	**5.2e-03**				**7.7e-04**
	Recovery	No power to start Charging pump		5.2e-03	MD	1.5e-01	
Step 13.a		**Place the following control switches to OFF**	**5.2e-03**				**7.7e-04**
	Recovery	No power to start Charging pump		5.2e-03	MD	1.5e-01	
Step 13.b		**Place the following control switches to pullout**	**5.2e-03**				**7.7e-04**
	Recovery	No power to start Charging pump		5.2e-03	MD	1.5e-01	
Step 13.d		**Open the following Relay Room panel doors**	**2.6e-03**				**3.8e-04**
	Recovery	No power to start Charging pump		5.2e-03	MD	1.5e-01	
Step 14.b.1		**Open Breaker 14606**	**1.0e-02**				**1.5e-03**
	Step 14.b.2	Close Breaker 14607		1.0e-02	MD	1.5e-01	
Step 14.b.2		**Close Breaker 14607**	**1.0e-02**				**1.5e-03**
	Step 14.c.1	Open the following breakers of MCC-52C		1.0e-02	MD	1.5e-01	
Step 14.c.1		**Open the following breakers of MCC-52C**	**1.0e-02**				**1.5e-03**
	Recovery	No power to start Charging pump		5.2e-03	MD	1.5e-01	
Step 14.c.2		**Open the following breakers of BRA-127**	**1.5e-02**				**2.2e-03**
	Recovery	No power to start Charging pump		5.2e-03	MD	1.5e-01	
Step 14.c.3		**Block open the following doors**	**2.6e-03**				**3.8e-04**
	Recovery	No power to start Charging pump		5.2e-03	MD	1.5e-01	
Step 14.d.1		**Open the following breakers of MCC-52E**	**1.0e-02**				**1.5e-03**
	Recovery	No power to start Charging pump		5.2e-03	MD	1.5e-01	
Step 14.e.1		**Open the following breakers of Bus 52**	**1.0e-02**				**1.5e-03**
	Recovery	No power to start Charging pump		5.2e-03	MD	1.5e-01	
Step 14.e.2		**Notify the Control Room and Close Breaker 15210**	**1.0e-02**				**1.5e-03**
	Step 15	Verify Bus 52 Energized		2.6e-03	MD	1.5e-01	
Step 15		**Verify Bus 52 Energized**	**2.6e-03**				**3.8e-04**
	Step 31.a RNO a.5	Go to step 15.		2.6e-03	MD	1.5e-01	
Step 16.a		**Close CVC-212**	**5.2e-03**				**7.5e-04**
	Step 31.a RNO a.5	Go to step 15		2.6e-03	MD	1.5e-01	
Step 16.b		**Close CVC-7**	**5.2e-03**				**2.6e-03**
	Step 16.f	Slowly open CVC-7 and control charging flow to restore PRZR level		5.2e-03	HD	5.0e-01	

Step 16.d		**Place Charging Pump A Controller to minimum speed**	**8.0e-03**				**4.0e-03**
	Step 16.e -Recovery	Start Charging Pump A to establish RXCP seal injection flow		5.2e-03	HD	5.0e-01	
Step 16.e - Recovery		**Start Charging Pump A to establish RXCP seal injection flow**	**5.2e-03**				**2.6e-03**
	Step 31.a RNO a.5	Go to step 15		2.6e-03	HD	5.0e-01	
Step 16.e		**Start Charging Pump A to establish RXCP seal injection flow**	**5.2e-03**				**2.6e-03**
	Step 31.a RNO a.5	Go to step 15		2.6e-03	HD	5.0e-01	
Step 16.f		**Slowly open CVC-7 and control charging flow to restore PRZR level**	**5.2e-03**				**2.6e-03**
	Step 31.a RNO a.5	Go to step 15		2.6e-03	HD	5.0e-01	
Step 16.f - Recovery		**Slowly open CVC-7 and control charging flow to restore PRZR level**	**5.2e-03**				**5.2e-03**
		Total Unrecovered:	**1.1e-01**			**Total Recovered:**	**3.5e-02**

HEP	*89-OBCMTNTDR-HE*	HEP Description	Operator Fail to close Containment Door with obstruction
Revision Date	2/22/2005	Evaluator	GE Baldwin
Reviewer	J. Masterlark	Operations Review	B. Gauger
Operations Input	I / S	Interviews and Time line for closure	
Scenario	A station blackout has occurred with fuel in the core and the equipment door open. Operations directs the closure of the equipment door.		
Event Description	A station blackout has occurred with fuel in the core and the equipment door open. Operations directs the closure of the equipment door. Maintenance closes the equipment door with assigned personnel but an obstacle is present. Maintenance removes the obstacle and then proceeds to close the equipment door.		
Assumptions for the Event	The following assumptions are made: • The obstacles present can be removed by any available means. • Maintenance people are assigned and familiar with task • Procedure is present, reviewed, and placekeeping used • A sense of urgency is present • Lighting from outside or other portable lighting is adequate to perform actions. • Atmosphere is hot and humid but not prohibitive.		
Timing Analysis	Action time is based an interviews of assigned and experienced personnel as well as plant logs. Time analysis is contained in the scenario timeline for this event. Total time was limited to an average Containment temperature of 120° F based on NUREG/CR-6143, *Evaluation of Potential Severe Accidents During Low Power and Shutdown Operations at Grand Gulf, Unit 1*. This occurs at 193 minutes per *Kewaunee Response to a Potential Loss of RHR Cooling Due to a Loss of All AC Power While at Reduced Inventory Conditions* (March 2005) but time was reduced to 180 minutes to allow 13 minutes for egress. [Grand Gulf is a GE plant with an inside hatch with 20 bolts.]		
Success Criteria	Containment Equipment Door is closed.		
References Used	CMP-89A-02		
Cognitive Assumption	None		
Cognitive Recovery Assumptions	None		
Execution Assumptions	It is assumed door is position for quick closure.		

Execution Recovery Assumptions	It is assumed that moving the rear of the rail system has a higher dependence due to time proximity and being less visible than the front part of the rail.

89-OBCMTNTDR-HE, Operator Fail to close Containment Door with obstruction

Basic Event Summary

Analyst:	GE Baldwin
Rev. Date:	03/08/05
Cognitive Method:	HCR/ORE/THERP

Table 6: 89-OBCMTNTDR-HE SUMMARY

Analysis Results:	**without Recovery**	**with Recovery**
P_{cog}	N/A	3.2e-01
P_{exe}	1.3e-01	4.4e-02
Total HEP		3.7e-01
Error Factor		1

HFE Scenario Description:
A station blackout has occurred with fuel in the core and the Containment equipment door open. Operations directs the closure of the Containment equipment door.

Related Human Interactions:
None

Performance Shaping Factors:
Extreme stress due to adverse working conditions and potential consequences of the failure. Additionally task performers have limited practice and resources to complete task. Potential for other failures also exist.

Best Estimate for time. Training was provided during pre-job brief.

Procedure and step governing HI:
CMP-89A-02, Step 4.4

Training:

- None
X - Classroom Frequency: 1
- Simulator

Degree of Clarity of Cues & Indications:

X - Very Good
- Average
- Poor

Human-Machine Interface:

- Control Room Panels

- Local Control Panels
X - Local Equipment

Special Requirements:

Tools		Parts	Clothing	
X	Required	Required	X	Required
X	Adequate	Adequate	X	Adequate
X	Available	Available	X	Available

Type of Response:

X - Skills
- Rule
- Knowledge

Complexity of Response

Cognitive		Execution	
X	Complex	-	Complex
-	Simple	X	Simple

Environment:

Lighting		Heat/Humidity	
-	Normal	-	Normal
-	Emergency	X	Hot / Humid
X	Portable	-	Cold

Radiation		Atmosphere	
-	Background	-	Normal
X	Green	X	Steam
-	Yellow	-	Smoke
-	Red	-	Respirator required

Equipment Accessibility:

	Location	Accessibility
-	Control Room Front Panels	
-	Control Room Back Panels	
-	Hot Shutdown Panels	
-	Auxiliary Building	
-	Electrical Building	
X	Containment	With Difficulty
-	Pump house	
-	Switchyard	

Stress:

- Optimum (Low)
- Moderate
X - Extreme (High)

Cognitive

89-OBCMTNTDR-HE

Cue:
Directed to close Containment Equipment Door by operations.

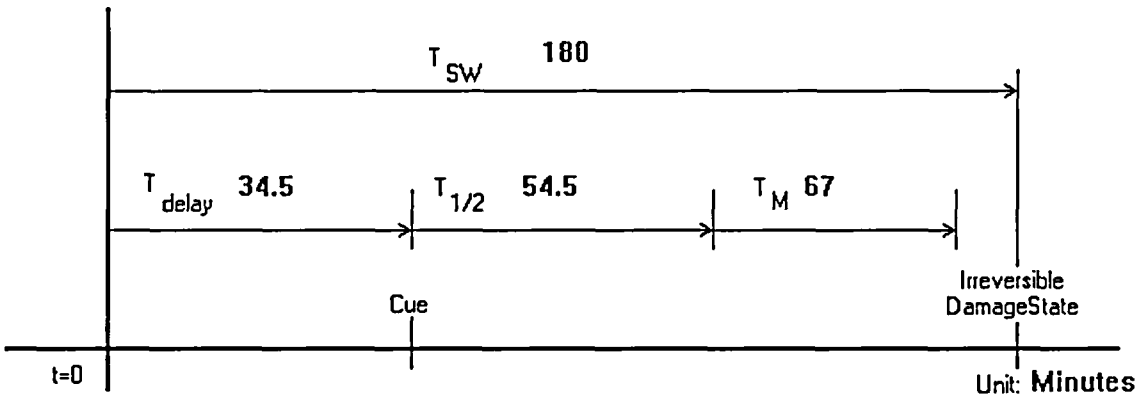

Reference for System Time: Kewaunee Response to a Potential Loss of RHR Cooling Due to a Loss of All AC Power While at Reduced Inventory Conditions (March 2005) and NUREG/CR-6143

Reference for Manipulation Time: Time line

Duration of time window available for action (TW): 24.00 Minutes

Sigma Decision Tree

	Skill vs. Rule		Procedures		Training		Stress
X	Skill		Yes		Yes		Yes
	Rule	X	No	X	No	X	No

Sigma: 8.0e-01

HEP: 3.2e-01

Execution Unrecovered

89-OBCMTNTDR-HE

Table 7: 89-OBCMTNTDR-HE EXECUTION UNRECOVERED

Step	Omission					Commission					Total	
		Table	Item	Stress	Stress		Table	Item	Stress	Stress	Over	Per
Step No.	HEP	Ref.	Ref.	E/M/O	Value	HEP	Ref.	Ref.	E/M/O	Value	Ride	Step
4.4.1	1.3E-3	20-7	1	E	5	6.3E-3	20-13	3	E	5		3.8e-02
Actions: Remove obstruction - front moved						Comments:						
4.4.1-2	1.3E-3	20-7	1	E	5	6.3E-3	20-13	3	E	5		3.8e-02
Actions: Remove Obstruction - Lift Rear						Comments:						
4.4.3	1.3E-3	20-7	1	E	5	1.3E-3	20-13	1	E	5		1.3e-02
Actions: Use Chain B to position Door						Comments:						
4.4.3-R	1.3E-3	20-7	1	E	5	1.3E-3	20-13	1	E	5		1.3e-02
Actions: Use Chain B to position door						Comments: Obstruction must be removed to position door.						
4.4.4	1.3E-3	20-7	1	E	5	1.3E-3	20-13	1	E	5		1.3e-02
Actions: Use Chain A to move door to flange						Comments:						
4.4.4-R	1.3E-3	20-7	1	E	5	1.3E-3	20-13	1	E	5		1.3e-02
Actions: Use Chain A to move door to flange						Comments: Door must be positioned to move to flange.						
4.4.5	1.3E-3	20-7	1	E	5	1.3E-3	20-13	1	E	5		1.3e-02
Actions: Swing 4 bolts equally spaced						Comments:						
4.4.5-R	1.3E-3	20-7	1	E	5	1.3E-3	20-13	1	E	5		1.3e-02
Actions: Swing 4 bolts eqally spaced						Comments: Door must be against flange to swing bolts in position						
4.4.7	1.3E-3	20-7	1	E	5	1.3E-3	20-13	1	E	5		1.3e-02
Actions: Tighten bolt enough for seal contact						Comments:						
4.4.7-R	1.3E-3	20-7	1	E	5	1.3E-3	20-13	1	E	5		1.3e-02
Actions: Tighten Bolts enough for seal contact						Comments: Bolts must be postioned to tighten for seal.						

Execution Recovery

89-OBCMTNTDR-HE

Table 8: 89-OBCMTNTDR-HE EXECUTION RECOVERY

Critical Step No.	Recovery Step No.	Action	HEP (Crit)	HEP (Rec)	Dep.	Cond. HEP (Rec)	Total for Step
4.4.1		Remove obstruction - front moved	3.8e-02				5.9e-03
	4.4.3-R	Use Chain B to position door		1.3e-02	MD	1.5e-01	
4.4.1-2		Remove Obstruction - Lift Rear	3.8e-02				1.9e-02
	4.4.3-R	Use Chain B to position door		1.3e-02	HD	5.1e-01	
4.4.3		Use Chain B to position Door	1.3e-02				2.0e-03
	4.4.4-R	Use Chain A to move door to flange		1.3e-02	MD	1.5e-01	
4.4.4		Use Chain A to move door to flange	1.3e-02				2.0e-03
	4.4.5-R	Swing 4 bolts eqally spaced		1.3e-02	MD	1.5e-01	
4.4.5		Swing 4 bolts equally spaced	1.3e-02				2.0e-03
	4.4.7-R	Tighten Bolts enough for seal contact		1.3e-02	MD	1.5e-01	
4.4.7		Tighten bolt enough for seal contact	1.3e-02				1.3e-02
		Total Unrecovered:	1.3e-01			Total Recovered:	4.4e-02